SPRINGFIELD WATER AND SEWER COMMISSION

PROJECT MANUAL
FOR
42 INCH RAW WATER BYPASS CONVEYANCE PIPELINE REHABILITATION AND ENERGY DISSIPATION VALVE CHAMBER
BID NO. 24-01

ISSUE DATE: February 21, 2024
GENERAL BID DEADLINE DATE: April 5, 2024, 2:00 P.M. EST

COMMISSIONERS

Vanessa Otero, Chairperson
Daniel Rodriguez, Commissioner
Matthew Donnellan, Commissioner

Joshua D. Schimmel, Executive Director

Theo G. Theocles, Esq. Director of Legal Affairs/Chief Procurement Officer

CONFORMED – JUNE 2024

CONFORMED DOCUMENTS HAVE BEEN PREPARED FOR CONVENIENCE ONLY AND HAVE NO OFFICIAL OR LEGAL STANDING. CONFORMED DOCUMENTS ARE NOT AN INTERPRETATION OF EITHER THE BID DCOCUMENT ADDENDA OR THE CONTRACT. THE USER ASSUMES ALL RISK ASSOCIATED WITH USE OF THIS DOCUMENT.

AECOM

AECOM Technical Services, Inc.
Chelmsford, Massachusetts

TABLE OF CONTENTS (CONT'D)

DIVISION 00 – BIDDING AND CONTRACT REQUIREMENTS

	Legal Advertisement (Newspaper)
	Estimated Bidding Schedule
00020	Invitation to Bid *Add 2*
00100	Instructions to Bidders *Add 2*
00200	Required Forms Listing
00200 A1	Tax Certification and Affidavit
00200 A2	Certificate of Non-Collusion
00200 A3	Debarment Disclosure Form
00200 A4	Equal Employment Opportunity Statement- SRF
00200 A5	OSHA Training Certification Form
00200 A6	Statement of Bidder's Qualifications *Add 2*
00200 A7	Americans with Disabilities Act
00200 A8	Springfield Water and Sewer Commission Corporate Certificate
00200 A9	General Contractor's Certification
00200 A10	Projected Workforce Certification
00300	Bid Form *Add 3*
	Certificate of Authority
	Proposed Subcontractor List
00500	Form of Agreement
00550	Form of Notice of Award
00560	Form of Notice to Proceed
00610	C-610 Performance Bond
00620	C-615 Payment Bond
00630	C-941 Change Order
00700	General Conditions (EJCDC C-700, 2007)
00750	SWSC Supplementary Conditions (Based on (EJCDC C-700, 2007)
00800	Attachment 1A - SRF Special Provisions for DBE Requirements
	Attachment 1B - SRF Forms 2021
	Schedule of Participation for SRF Construction (EEO-DEP-190C)
	Letter of Intent for SRF Construction (EEO-DEP-191C)
	DBE Certification of United States Citizenship
	Subcontractor Participation Form (EPA form 6100-2)
	Request for Waiver for SRF Construction (EEO-DEP-490C)
	Schedule of Subcontractor's Participation
	Attachment 2b - Massachusetts Certified Payroll Form
	Attachment 2 - Massachusetts Wage Rates 24-01
	Attachment 3 - Excerpts from Massachusetts General Laws
	Attachment 4 - Davis Bacon Wage Rates SWSC Bid 24-01
	Attachment 5 - American Iron and Steel Requirements
	Attachment 6 - WIFIA Requirements

TABLE OF CONTENTS (CONT'D)

00811 Price Adjustment for Hot Mix Asphalt (HMA) Mixtures
00812 Price Adjustment for Diesel Fuel and Gasoline
00814 Price Adjustment for Portland Concrete Mixes

DIVISION 01 – GENERAL REQUIREMENTS

01010 Summary of Work
01045 Cutting, Coring, and Patching
01046 Control of Work
01063 Miscellaneous Requirements
01065 Structural Tests and Inspections
01068 Federal Requirements
01080 Abbreviations and Definitions
01090 Reference Standards
01110 Environmental Protection Procedures
01120 Health and Safety
01151 Measurement and Payment *Add 2*
01152 Applications for Payment
01200 Project Meetings
01300 Submittals
01310 Construction Progress Schedules
01370 Schedule of Values
01380 Construction Photographs
01400 Quality Assurance
01500 Temporary Facilities *Add 3 and 5*
01501 Weather Protection Standard
01568 Erosion Control, Sedimentation and Containment of Construction Materials
01600 Control of Materials
01610 Delivery, Storage, and Handling
01700 Contract Closeout
01710 Cleaning Up
01720 As-Built Documents
01730 Operations and Maintenance Data
01740 Warranties and Bonds
01801 Facility Completion Plan
01802 Functional Completion Testing
01803 Start-up and Commissioning
01804 Performance Testing
01805 Training
01900 Seismic Requirements

TABLE OF CONTENTS (CONT'D)

DIVISION 02 – SITE WORK

02012 Monitoring Well Decommissioning
02018 Vibration Monitoring
02023 Subsurface Utility Locating (Potholing)
02050 Demolition and Alterations
02100 Site Preparation
02123 Combination Air Vacuum Release Valve
02140 Dewatering
02160 Temporary Excavation Support Systems
02210 Earth Excavation, Backfill, Fill, and Grading
02211 Rock Excavation and Disposal
02212 Controlled Low Strength Material (CLSM)
02223 Screened Gravel
02224 Bank-Run Gravel
02225 Select Borrow
02273 Geotextile Fabric
02317 Granular Materials
02435 Crushed Stone
02480 Wetland Restoration and Landscaping
02509 Precast Manholes
02590 Cathodic Protection
02600 Water Mains and Appurtenances
02610 CFRP Technical Specification *Add 2 and 3*
02611 Internal Pipe Joint Seals
02612 Pipe Joint Pressure Testing *Add 3*
02613 Concrete and Joint Mortar Repair
02614 Cement Mortar Lining Repair
02615 PCCP Pipe
02616 Inline Free-Swimming Leak and Air Pocket Detection
02617 Remote Transient Pressure Monitoring
02618 HD CCTV and LiDAR Defect Mapping
02623 PVC Pressure Pipe
02740 Bituminous Paving
02830 Segmental Retaining Walls

DIVISION 03 – CONCRETE

03100 Concrete Formwork
03200 Concrete Reinforcement
03250 Concrete Joints and Accessories

TABLE OF CONTENTS (CONT'D)

03255 Non Expanding Waterstops
03256 Expanding Waterstops
03300 Cast-In-Place Concrete
03600 Grouting
03730 Concrete Repair Work
03800 Leakage Testing of Containment Area

DIVISION 05 – METALS

05500 Miscellaneous Metal
05519 Post-Installed Concrete Anchors

DIVISION 07 – THERMAL AND MOISTURE PROTECTION

07140 Cold Fluid-Applied Waterproofing
07180 Traffic Coating

DIVISION 09 – FINISHES

09940 Shop Painting
09941 Field Painting
09970 External Steel Pipe Coating

DIVISION 13 – SPECIAL CONSTRUCTION

13310 Utility Control Instrumentation System
13310A Process Control and Instrumentation Data Sheets
13310B Control Strategies
13420 Ultrasonic Flowmeter

DIVISION 14 – CONVEYING SYSTEMS

14370 Bridge Cranes and Appurtenances

DIVISION 15 – MECHANICAL

15072 Steel Pipe & Fittings
15073 Exposed Steel Pipe & Fittings
15101 Process Valves and Appurtenances
15103 Stainless Steel Slide Gates and Appurtenances
15107 Strainers and Appurtenances
15110 Axial Flow Control Valves and Appurtenances

TABLE OF CONTENTS (CONT'D)

15112 Self-Contained Automatic Control Valves and Appurtenances
15114 Knife Gate Valves and Appurtenances *Add 5*
15400 Plumbing
15806 Heating, Ventilating, and Air Conditioning

DIVISION 16 – ELECTRICAL

16050 Electrical Work - General
16110 Electrical Raceway System
16120 Electric Wires and Cables
16160 Panelboards
16220 Electric Motors
16320 General Purpose Dry - Type Transformers
16359 Electrical System Studies
16400 Transient Voltage Surge Suppression
16402 Underground Distribution System
16450 Grounding
16761 Video Surveillance System
16900 Electrical Controls and Miscellaneous Electrical Equipment
16998 Field Inspection and Acceptance Tests

APPENDICES

Appendix A – Geotechnical Data Report
Appendix B – Permits
Appendix C – 1953 PCCP Pipe Specification
Appendix D – West Parish Filters Arc Flash Hazards Analysis
Appendix E - Bridge No. 3 Structural Analysis and Drawings
Appendix F – Addendum 1

END OF SECTION

LEGAL ADVERTISEMENT
SPRINGFIELD WATER AND SEWER COMMISSION
CHIEF PROCUREMENT OFFICER
SWSC Bid No. 24-01, 42 INCH PCCP RAW WATER CONVEYANCE PIPELINE AND EDV FACILITY CAPITAL PROJECT

Sealed bids for a Prime Contractor contract are requested by the Springfield Water and Sewer Commission's ("Commission") Chief Procurement Officer. Bidding procedures are per Massachusetts General Laws (MGL) Chapter 30§39M as amended and other applicable statutes. This project is funded by the EPA's Water Infrastructure Finance and Innovation Act (WIFIA) and Contractor's attention is drawn to the WIFIA requirements contained in the bidding documents.

Bids for Prime/General Contractor will be accepted by the Commission's Chief Procurement Officer at the Springfield Water and Sewer Commission John J. Lyons Administration Building, 250 M Street Ext., Agawam, MA until **2:00PM EST** on **April 5, 2024**, at which time they will be publicly opened and read.

42 INCH PCCP RAW WATER CONVEYANCE PIPELINE AND EDV FACILITY. The Work includes, but is not necessarily limited to, the following major items: Repairs to 42-inch prestressed concrete cylinder pipe raw water conveyance pipeline along the 9,300 foot length of the pipeline (internal and external), as well as the replacement of eighteen (18) pipe segments, replacement of eleven (11) existing manways, installation of two (2) new manways, and rehabilitation of two (2) existing manways, installation of thirteen (13) new and replacement of one (1) existing combination vacuum/air release valves; and installation of fifteen (15) new precast concrete vaults at manways. The Project is estimated not to exceed $22.6 Million.

An optional pre-bid meeting has been scheduled for March 6, 2024, at 10:00 A.M. The pre-bid meeting will be held at 1515 Granville Road, Westfield, MA. Bidders are strongly encouraged to attend the site visit. Site Visit contact: (Contact: Rhonda Pogodzienski at Rhonda.pogodzienski@aecom.com).

Bid Forms and Contract Documents will be available for pick-up at www.biddocsonline.com on February 21, 2024, online at www.biddocsonline.com (may be viewed electronically and hard copy requested) or at Nashoba Blue, Inc. at 433 Main Street, Hudson, MA 01749 (978-568-1167). Bidders requesting Contract Documents to be mailed to them shall include a separate check for $40.00 per set for UPS Ground (or $65.00 per set for UPS overnight), payable to BidDocs ONLINE Inc. to cover mail handling costs (these costs are estimated and are subject to increase).

Contractor must agree to pay Davis Bacon wage rates or MA Prevailing Wage rates whenever applicable. The SWSC reserves the right to waive any informality in, or to revoke, any or all bids, if in the public interest to do so. All questions regarding bid or its specifications must be made in writing and received by the Chief Procurement Officer by **March 22, 2024, 4:30 P.M**. in order to be considered (contact: theo.theocles@waterandsewer.org).

Theo G. Theocles Esq., Director of Legal Affairs/Chief Procurement Officer
Springfield Water and Sewer Commission
****

Note to Newspaper: Please publish the above only under the heading "Legal Advertisements" on the following date: **February 21, 2024.** Please refer to SWSC Bid No. 24-01 when invoicing.

ESTIMATED BIDDING SCHEDULE

42-INCH PCCP RAW WATER CONVEYANCE PIPELINE AND EDV FACILITY SWSC PROJECTED WORKFORCE CERTIFICATION SWSC BID NO. 24-01

Date	Activity
Thursday 2/15/2024, 4:00 pm	Submit Notice to Massachusetts Central Register
Wednesday, 2/21/2024	Notice Published in Central Register
Wednesday, 2/21/2024	Ad Published in Republican
Wednesday, 2/21/2024	Bid packages available (www.biddocsonline.com)
Wednesday, 3/6/2024	Optional Pre-Bid Meeting at WPF, 10:00 am
Wednesday, 3/22/2024, 4:30 pm	Last day for submittal of written questions to CPO (theo.theocles@waterandsewer.org)
Friday, 4/5/2024, 2:00 pm	**BIDS DUE TO SWSC and opened**
4/8/2024 – 4/19/2024	Bid Review Period
April/ May 2024	Contract Award Date at Scheduled SWSC Board Meeting
Monday, 5/6/2024	Estimated Contract Start Date (NTP Date)
Thursday, 11/6/2025	Estimated Substantial Completion Date
SUBSTANTIAL COMPLETION DATE: 548 CALENDAR DAYS FROM RECEIPT OF NTP	

June 2024 Conformed

INVITATION FOR BIDS

Repairs to 42-inch PCCP Raw Water Conveyance Pipeline and EDV Facility SWSC Bid No. 24-01

The Springfield Water and Sewer Commission, Springfield, Massachusetts, "Commission", "Owner", "SWSC" or the "Awarding Authority"), is seeking sealed bids for the Project: **42-inch Raw Water Bypass Conveyance Pipeline Rehabilitation and Energy Dissipation Valve Chamber (SWSC Bid No. 24-01),** in the City of Westfield, Massachusetts.

Sealed bids will be received at the Offices of the Springfield Water and Sewer Commission, 250 M Street Extension, Agawam, MA 01101 or by mail at the Springfield Water and Sewer Commission, 250 M Street Extension, Agawam, MA 01101 until April 26~~5~~, 2024, 2:00 p.m. at which time all bids will be publicly opened and read aloud.

The bidding and award of the Contract shall be in full compliance with Sections 30§39M of the General Laws of the Commonwealth of Massachusetts as last revised. Complete instructions for filing Bids are included in the Instructions to Bidders.

Bidders shall note that the United States Postal Service and major commercial delivery or package express companies deliver to the business office at 250 M Street Extension. It is the Bidder's responsibility to ensure that their proposal is received at the office of the Commission by the closing date and time.

Due to the size and scope of the associated project, Contract Documents will be available on February 21, 2024. Contract Documents will be available for pick-up at www.biddocsonline.com online at www.biddocsonline.com (may be viewed electronically and hard copy requested). Bidders requesting Contract Documents to be mailed to them shall include a separate check for $40.00 per set for UPS Ground (or $65.00 per set for UPS overnight), payable to BidDocs ONLINE Inc. to cover mail handling costs (these costs are estimated and are subject to increase).

An optional but recommended Pre-Bid Conference will be held at 10:00 A.M. on March 6, 2024, at 1515 Granville Road, Westfield, MA.

Nature and scope of work: Repairs to 42-inch PCCP Raw Water Conveyance (RWC) Pipeline and Energy Dissipation Valve (EDV) Facility. The Work includes, but is not necessarily limited to; Repairs to 42-inch prestressed concrete cylinder pipe raw water conveyance pipeline, including approximately 16 repair classifications along the 9,300-foot length of the pipeline: both internal and external, as well as the replacement of 19 pipe segments, replacement of 11 existing manways, installation of 2 new manways, and

rehabilitation of two existing manways, installation of 13 new and replacement of (1) existing combination vacuum/air release valves; and installation of 15 new precast concrete vaults at manways. This project is subject to work restrictions as described in Section 01010 – Summary of Work.

Demolition and replacement of the existing EDV Facility to dissipate energy from the head provided by the Cobble Mountain Reservoir during operation of the 42-inch RWC pipeline. The new EDV Chamber will contain three basket strainers and EDVs in a concrete valve chamber and located at the discharge to the existing sedimentation basin. The valve chamber also contains an Equalization Tank (EQ tank) that functions as a stilling basin/reservoir to receive flow from the EDVs then to pass flow either to the existing sedimentation basin or to the future WPF facilities. Flow monitoring will be provided via a proposed 42-inch ultrasonic flow meter upstream of the EDV chamber. A combination of flow metering and EQ tank water level control will be provided to control and/or monitor water levels in the EQ tank and at the sedimentation basin. The combined structure will be buried concrete construction with the roof, access hatches, and overflow weir located above finished grade. Project scope also includes hydrostatic and operational testing of the repaired pipeline and EDV facility.

The time for completion of this project is **548** calendar days from the date of the written Notice to Proceed.

All questions must be made in writing and received by the SWSC Chief Procurement Officer, Theo G. Theocles, Esq., no later than AprilMarch 122, 2024, via the following contact: theo.theocles@waterandsewer.org.

All bids shall be accompanied by a bid deposit in an amount no less than five percent (5%) of the value of the bid, in the form of a certified, cashier's or treasurer's check issued by a responsible bank or trust company made payable to the Springfield Water and Sewer Commission or a bid bond.

A performance bond in an amount equal to 100 percent of the total amount of the bid will be required for faithful performance of the contract as well as Labor and Materials bond in an amount equal to 100 percent of the total bid amount. The surety company must be qualified to do business in the Commonwealth of Massachusetts, and the form of surety must be satisfactory to the Springfield Water and Sewer Commission.

Every bid bond, performance bond, and payment bond issued for any construction work in the Commonwealth of Massachusetts shall be the bond of a surety company organized pursuant to Section 105 of Chapter 175 or of a surety company authorized to do business in the Commonwealth under the provisions of Section 106 of said Chapter 175 and be approved by the U.S. Department of Treasury and are acceptable as sureties and reinsurers on federal bonds under Title 31 of the United States Code, sections 9304 to 9308.

The Springfield Water and Sewer Commission reserves the right to reject any or all bids if it is in the public interest to do so. The Springfield Water and Sewer Commission reserves the right to waive any informality in if deemed it its best interest to do so as may be allowed by statute.

General Contractors shall be required to comply with all applicable Massachusetts General Laws. Bidders may not withdraw their Bids for a period of thirty days, excluding Saturdays, Sundays, and legal holidays after the actual date of the opening of the Bids.

Minimum Wage Rates as determined by the Executive Office of Labor and Workforce Development under the provision of the Massachusetts General Laws, Chapter 149, Sections 26 to 27D, as amended, apply to this project. It is the responsibility of the bidder, before bid opening, to request, if necessary, any additional information on Minimum Wage Rates for those trades people who may be employed for the proposed work under this contract. Federal Minimum Wage Rates as determined by the United States Department of Labor under the Davis-Bacon Act also apply to this project.

Disadvantaged Business Enterprise (DBE) goals are applicable to the total dollars paid to the construction contract. The goals for this project are a minimum of **4.8 percent D/MBE participation and 4.5 percent 6.9/WBE** participation by certified DBEs. The two low bidders shall submit completed DBE forms (EEO-DEP-190C, EEO-DEP-191C and the DBE Certification of United States Citizenship form) by the close of business on the third business day after bid opening. Failure to comply with the requirements of this paragraph may be deemed to render a proposal non-responsive. The Awarding authority requests copies of these form also be sent to its attention (theo.theocles@waterandsewer.org).

The project requires compliance with the Department of Environmental Protection's Diesel Retrofit Program by use of after-engine emission controls that are EPA certified, or their equivalent, on all of the off-road (non-registered) diesel vehicles/equipment used at the job site.

This project is funded by the Water Infrastructure Finance and Innovation Act (WIFIA), and potential bidder's attention should be directed to the WIFIA requirements attachment. The attachment details the minimum compliance efforts contractors will need to demonstrate for M/WBE and DBE participation.

THEO G. THEOCLES, ESQ.
DIRECTOR OF LEGAL AFFAIRS/CHIEF PROCUREMENT OFFICER
SPRINGFIELD WATER AND SEWER COMMISSION
250 M STREET EXTENSION
AGAWAM, MASSACHUSETTS 01001

END OF SECTION 00020

THIS PAGE INTENTIONALLY LEFT BLANK

INFORMATION TO BIDDERS

ARTICLE 1 RECEIPT AND OPENING OF BIDS:
ARTICLE 2 PREPARATION OF BID:
ARTICLE 3 WITHDRAWAL OF BIDS:
ARTICLE 4 METHOD OF BIDDING:
ARTICLE 5 QUALIFICATIONS OF BIDDER:
ARTICLE 6 BID SECURITY:
ARTICLE 7 LIQUIDATED DAMAGES FOR FAILURE TO ENTER INTO CONTRACT:
ARTICLE 8 TIME OF COMPLETION AND LIQUIDATED DAMAGES:
ARTICLE 9 CONDITIONS OF WORK:
ARTICLE 10 ADDENDA AND INTERPRETATIONS:
ARTICLE 11 CONTRACT SECURITY:
ARTICLE 12 POWER OF ATTORNEY:
ARTICLE 13 LAWS AND REGULATIONS:
ARTICLE 14 METHOD OF AWARD-LOWEST RESPONSIBLE BIDDER:
ARTICLE 15 AFFIRMATIVE ACTION PROGRAM:
ARTICLE 16 ITEMS NOT LISTED IN THE BID:
ARTICLE 17 BALANCED BIDDING:
ARTICLE 18 PRICES:
ARTICLE 19 UNCERTAINTY OF QUANTITIES:
ARTICLE 20 ACCESS TO SITE:
ARTICLE 21 CONTRACT:
ARTICLE 22 WORK ON STATE MUNICIPAL, AND PRIVATE PROPERTY:
ARTICLE 23 PAYMENT FOR DRAWINGS AND DOCUMENTS:
ARTICLE 24 CORRECTIONS:
ARTICLE 25 INSURANCE REQUIREMENTS:
ARTICLE 26 REQUIREMENTS FOR FOREIGN CORPORATIONS:
ARTICLE 27 PRE-CONSTRUCTION CONFERENCE:
ARTICLE 28 TRAFFIC CONTROL AND PEDESTRIAN SAFETY:
ARTICLE 29 MINIMUM WAGE RATES
ARTICLE 30 GUARANTEE
ARTICLE 31 MANUFACTURER'S EXPERIENCE:
ARTICLE 32 MASSACHUSETTS SALES TAX AND USE TAX:
ARTICLE 33 SAFETY AND HEALTH REGULATIONS:
ARTICLE 34 OSHA SAFETY TRAINING – CHAPTER 306 OF THE ACTS OF 2004
ARTICLE 35 AMERICAN IRON AND STEEL REQUIREMENTS:
ARTICLE 36 PRICE ADJUSTMENTS:

ARTICLE 1 RECEIPT AND OPENING OF BIDS:

The Springfield Water and Sewer Commission, Springfield, Massachusetts, (herein called the "Owner"), invites bids on the form attached hereto, all blanks of which must be appropriately filled in. Bids will be received by the Owner at the Office of the Springfield Water and Sewer Commission, Springfield, Massachusetts, 250 M Street Extension, Agawam, MA 01101, as stated in the Invitation for Bids, at which time they

will be publicly opened and read aloud (via remote bid opening). The envelopes containing the bids must be sealed, addressed to the attention of the Springfield Water and Sewer Commission, Attention: Chief Procurement Officer, 250 M Street Extension, Agawam, MA 01101 and designated as "**SWSC Bid No. 24-01,42-Inch Raw Water Bypass Conveyance Pipeline Rehabilitation and Energy Dissipation Valve Chamber."** Any hand delivered Bid received after the deadline will not be accepted. Any other Bid received after the deadline will be returned to the addressee. Any Bid submitted to and received by the Springfield Water and Sewer Commission after the deadline for receipt of Bids will not be accepted. It is the responsibility of the Bidder to ensure that its Bid is received by the Springfield Water and Sewer Commission in a timely fashion. The deadline for receipt of Bids can be extended by written Addendum only. Bids may not be submitted orally, by facsimile, by email, by telephone, or any other method except for the methods described above. A Bid may be modified only by submitting any such modification in the form of a document executed in the same manner as a Bid, delivered in a sealed envelope in the same manner as a Bid, designated as a modification to the original Bid and submitted to the Springfield Water and Sewer Commission prior to the time designated for the opening of Bids.

The Owner may waive any informalities or may reject any and all bids.

Any bid may be withdrawn prior to the scheduled time for the opening of bids or authorized postponement thereof. Any bid received after the time and date specified shall not be considered.

The time period for holding bids, where Federal approval is not required is 90 days, Saturdays, Sundays, and legal holidays excluded, after the opening of bids and where Federal approval is required, the time period for holding bids is 90 days, Saturdays, Sundays, and holidays excluded after such approval.

Public Bid Review and Inspection:

1. Upon opening, all Bids become public records except for portions thereof that are not subject to public disclosure as a matter of law.

2. Bids may be reviewed by the public in a manner set forth by the Owner.

ARTICLE 2 PREPARATION OF BID:

Each bid must be submitted on the prescribed form. All blank spaces for bid prices must be filled in, in ink or typewritten, both in words and figures. All bids must be prepared in conformity with and shall be based upon and submitted subject to all requirements of the Specifications and Drawings together with all addenda thereto.

Each bid must be submitted in sealed inner and outer envelopes bearing on the outside of each envelope the name of the bidder, his address, and the name of the project for which the bid is submitted. Both envelopes shall be clearly labeled "BID DOCUMENTS" so as to guard against opening prior to the time set therefore, and no blame shall be attached to any agent or employee of the Springfield Water and Sewer Commission for the opening of any bid not so marked.

In submitting a Bid, the Bidder represents that:

1. It has read and examined the Specifications, Details, Drawings, and Bidding Documents thoroughly;

2. It understands the Specifications, Details, Drawings, and Bidding Documents;

3. The Bid is made in accordance with the Specifications, Details, Drawings, and Bidding Documents;

4. It has visited the site, has become familiar with the conditions of the site and the surrounding area, and has familiarized itself with the local conditions that may in any manner affect cost, progress, or performance of Work;

5. It has correlated its own observations with the Specifications, Details, Drawings, and Bidding Documents;

6. It has found no errors, conflicts, ambiguities, or omissions in the Specifications, Details, Drawings, and Bidding Documents, except for those that it has brought to the Owner's attention in writing at least seven calendar days prior to submitting the Bid.

7. It is familiar with all applicable Federal, State, City and Springfield Water and Sewer Commission laws, rules, regulations, and procedures affecting its Bid and its Bid is in conformity with those laws, rules, regulations and procedures, specifically the WIFIA requirements and associated documents; and

8. The Bidder has complied with every requirement of these Instructions and that the Specifications, Details, Drawings, and Bidding Documents are sufficient in scope and detail to indicate and convey an understanding of all terms and conditions for the performance of the Work.

ARTICLE 3 WITHDRAWAL OF BIDS:

Prior to Bid opening. A Bid may be withdrawn before the time designated for opening Bids. The Bidder requesting such withdrawal must make the request in writing and in a specific manner designated by the Owner if the Owner so requires. Withdrawal of a Bid prior to the Bid opening time will not prejudice the right of a Bidder to resubmit a Bid. A Bid cannot be withdrawn after the Bid opening time except as provided by law.

After Bid opening. In the case of death, disability, bona fide clerical error or mechanical error of a substantial nature or other unforeseen circumstances affecting a Bidder, a Bidder may withdraw its Bid after the time designated for the Bid opening, if within five days of the date designated for opening its Bid, such Bidder submits a statement under the penalties of perjury to the Springfield Water and Sewer Commission detailing the basis for withdrawal. The Owner will then make a determination as to whether such Bidder had satisfied both the statutory and Owner requirements for such withdrawal. If the Owner is satisfied, the Bid Deposit will be returned to such Bidder.

ARTICLE 4 METHOD OF BIDDING:

The Owner invites a bid for the complete construction of the project, together with all related incidental and appurtenant work as described in these Specifications and/or outlined or shown on the Drawings.

ARTICLE 5 QUALIFICATIONS OF BIDDER:

The Bidder is directed to review Section 00200 A6 – STATEMENT OF BIDDER'S QUALIFICATIONS, as well as specific subcontractor experience requirements outlined in the Technical Specifications for performing specialty repair techniques. The Bidder shall complete statement of bidder's qualifications and submit with the bid. Conditional bids will not be accepted.

The Bidder is directed to the following requirements: the Bidder shall have completed three projects in the last five years which included coordination and work of a comparable scope and complexity as this Project including the specialty repair techniques outlined in the specifications as follows:

Spec No.	Name	Summary of Specialty Subcontractor Required Experience
02618	LIDAR and CCTV	1 year experience in pipe and joint defect mapping using CCTV and LiDAR in PCCP of similar diameter

Spec No.	Name	Summary of Specialty Subcontractor Required Experience
	Inspections	3 years of project references for pipe and joint defect mapping using CCTV and LiDAR in PCCP of similar diameter
		Letter from manufacturer of the pipe and defect mapping equipment indicating subcontractor is properly trained
02616	In-line Free Swimming Leak Detection	3 years experience in acoustic in-line leak and air pocket detection of PCCP of similar diameter
		3 project references
		50 successful insertions and extractions of proposed equipment
		Letter from manufacturer of the pipe and defect mapping equipment indicating subcontractor is properly trained
02615	PCCP Pipe	10 years of experience installation of PCCP
		Letter from manufacturer indicating subcontractor is approved for installation
02614, 02613	Cement Mortar Lining Repairs, Concrete and Joint Mortar Repairs	3 project references
		5 years experience in applying cement-based or polymer modified repair compounds
02613	Concrete and Joint Mortar Repair	3 project references
		5 years experience in applying cement-based or polymer modified repair compounds
02612	Pipe Joint Pressure Testing	5 years experience in pressuring testing of concrete pipe joints of similar diameter
		3 project references
		Letter from manufacturer of testing equipment indicating subcontractor is trained on the use of the equipment
02611	Internal Pipe Joint Seals	5 years experience of installation of internal pip joint seals in concrete pipelines of similar size
		3 project references
		Letter from manufacturer stating subcontractor has been trained on proper techniques for installation of products and is on the manufacturer's approved list of contractors.

Spec No.	Name	Summary of Specialty Subcontractor Required Experience
02610	CFRP Repair	130 independent installations of CFRP in the past fivethree years of pipelines greater than 360 inches and pressures greater than 360 psi and minimum length of a single pipe stick20 feet of repair
		Letter from system supplier verifying the CFRP installer are trained and certified in the proposed CFRP system.
		Foreman, head supervisor, and 5 technicians shall be certified to perform CFRP repairs.
		3 years experience in CFRP repair of man-entry internallarge diameter pipe, with 250 internal pipe repairs projects per worker.

The Owner reserves the right to reject the Bid of any Bidder who the Owner has determined has not completed a prior project, whether with the Springfield Water and Sewer Commission or elsewhere, because of the fault of the Bidder, its Subcontractors or employees; has been declared in default on a prior contract whether with the Springfield Water and Sewer Commission or elsewhere; has failed to complete a prior project in a timely fashion whether with the Springfield Water and Sewer Commission or elsewhere; based on its work record, is not capable of performing the Work within Contract whether due to lack of sufficient prior experience, as determined by the Owner, or for any reason; does not meet the minimum qualifications and experience requirements stated above and elsewhere; has not completed three projects in the last five years which included coordination and work of a comparable scope and complexity as this Project; has a work record of its Subcontractors demanding direct payment from the Owner or other awarding authority; has a work record of its Subcontractors, employees or material suppliers complaining to the Owner or other awarding authority regarding the Bidder's failure to pay them; has a record of complaints made to the Owner or other awarding authority by persons offended by the behavior of the Bidder, its Subcontractors or employees; is currently in litigation with the Owner; or has a record of its failure to comply with the Commonwealth and/or Springfield Water and Sewer Commission laws or requirements. "Work record" or "record" constitutes a minimum of one event in the work history of the Bidder.

ARTICLE 6 BID SECURITY:

Each bid must be accompanied by treasurer's certified check or bank check of the bidder, or a bid bond prepared on the form of bid bond attached hereto, duly executed by the bidder as principal and having as Surety thereon a surety company meeting the statutory requirements below, in the amount of 5 percent of the bid. Such check or bid bond will

be returned to all except the three lowest bidders within five days after the opening of bids, and the remaining checks or bid bonds will be returned promptly after the Owner and the accepted bidder have executed the Contract; or if no award has been made within 30 days after the date of the opening of bids, upon demand of the bidder at any time thereafter, so long as bidder has not been notified of the acceptance of its bid. The applicable requirements pertaining to the bid bond shall also apply to the certified check.

Every bid bond, every performance bond and every payment bond issued for any construction work in the Commonwealth of Massachusetts shall be the bond of a surety company organized pursuant to Section 105 of Chapter 175 or of a surety company authorized to do business in the Commonwealth under the provisions of Section 106 of said Chapter 175 and be approved by the U.S. Department of Treasury and are acceptable as sureties and reinsurers on federal bonds under Title 31 of the United States Code, sections 9304 to 9308.

The Owner shall reject every Bid that is not accompanied by a Bid deposit.

ARTICLE 7 LIQUIDATED DAMAGES FOR FAILURE TO ENTER INTO CONTRACT:

The successful bidder, upon its failure or refusal to execute and deliver the Contract and Bonds required within 10 days after bidder has received notice of the acceptance of its bid, shall forfeit the bid security to the Owner as liquidated damages for such failure or refusal the security deposited with its bid.

ARTICLE 8 TIME OF COMPLETION AND LIQUIDATED DAMAGES:

CONTRACTOR and Owner recognize that time is of the essence and that Owner will suffer financial and other losses if the Work is not completed within the times specified in the Invitation to Bid, plus any extensions thereof allowed in accordance with the Contract. The parties also recognize the delays, expense, and difficulties involved in proving in a legal or arbitration proceeding the actual loss suffered by the OWNER if the Work is no completed on time. Accordingly, instead of requiring any such proof, OWNER and CONTRACTOR agree that the bidder must agree to commence work on or before a date to be specified in a written notice to proceed by the Owner, and to fully complete the project within the period specified in the Invitation to Bid. Bidder must also agree to pay as liquidated damages (but not as penalty) the amount listed in Section 00300 for each consecutive calendar day after the time (as duly adjusted pursuant to the Contract) specified in the Invitation to Bid for Substantial Completion until the Work is substantially complete. .

ARTICLE 9 CONDITIONS OF WORK:

All bidders shall inform themselves fully of the conditions relating to the Specifications, Details, Drawings, and Bidding Documents; construction; and labor, under which the work is now or will be performed; including personal examination of the sites. Failure to do so will not relieve the successful bidder of its obligation to furnish all material and all labor necessary to carry out the provisions of the Contract Documents, and to complete the contemplated work for the consideration set forth in their bid.

ARTICLE 10 ADDENDA AND INTERPRETATIONS:

No interpretation of the meaning of the Drawings, Specifications, or other pre-bid documents will be made to any bidder orally. Every request for such interpretations shall be made in writing addressed to Theo G. Theocles, Esq. Director of Legal Affairs and Chief Procurement, Springfield Water and Sewer Commission, 250 M Street Extension, Agawam, MA 01101 (theo.theocles@waterandsewer.org), and to be given consideration must be received by the date indicated in SECTION 00020 – INVITATION TO BID. Any and all such interpretations and any supplemental instructions will be in the form of written addenda to the Specifications, which, if issued, will be emailed to all prospective bidders (at the respective email addresses furnished for such purposes), not later than 3 days prior to the date fixed for the opening of bids. Failure of any bidder to receive any such addendum or interpretations shall not relieve such bidder from any obligation under his bid as submitted. All addenda so issued shall become part of the Contract Documents.

Oral clarifications or interpretations will be without legal effect. Addenda will be emailed to all persons having received Bidding Documents from the Springfield Water and Sewer Commission. Each Bidder shall be responsible for determining that it has received all Addenda issued.

Acknowledgment of Addenda: Each Bidder is required to acknowledge the receipt of all Addenda (the numbers of which are to be filled in on the Bid form by the Bidder).

ARTICLE 11 CONTRACT SECURITY:

Simultaneously with the delivery of the executed Contract, the General Contractor shall furnish the Owner with a Performance Bond and a Payment Bond in penal sums equal to the amount of the Contract price, conditioned upon the performance by the Contractor of all undertakings, covenants, terms, conditions and agreements of the Contract Documents, and upon the prompt payment by the Contractor to all persons supplying labor and materials in the prosecution of the work provided by the Contract Documents. Such bonds shall be executed by the Contractor and a corporate bonding company

licensed to transact such business in the state in which the work is to be performed and named on the current list of "Surety Companies Acceptable on Federal Bonds" as published in the Treasury Department Circular No. 570. The expense of these bonds shall be borne by the Contractor. If at any time a surety on any such bond is declared a bankrupt or loses its right to do business in the state in which the work is to be performed, or is removed from the list of Surety Companies accepted on Federal bonds, the Contractor shall immediately notify the Owner and shall, within ten (10) days after notice from the Owner to do so, substitute an acceptable bond (or bonds) in such form and sum and signed by such other Surety or Sureties as may be satisfactory to the Owner. The premiums on such bond shall be paid by the Contractor. No further payments shall be deemed due nor shall be made until the new Surety or Sureties shall have furnished an acceptable Bond to the Owner.

Every bid bond, every performance bond and every payment bond issued for any construction work in the Commonwealth of Massachusetts shall be the bond of a surety company organized pursuant to Section 105 of Chapter 175 or of a surety company authorized to do business in the Commonwealth under the provisions of Section 106 of said Chapter 175 and be approved by the U.S. Department of Treasury and are acceptable as sureties and reinsurers on federal bonds under Title 31 of the United States Code, sections 9304 to 9308.

ARTICLE 12 POWER OF ATTORNEY:

Attorneys-in-fact who sign bid bonds or contract bonds must file with each bond a certified and effectively dated copy of their power of attorney.

ARTICLE 13 LAWS AND REGULATIONS:

The bidder's attention is directed to the fact that all applicable Federal and State laws, including Commonwealth of Massachusetts General Laws, requiring fair competition of bidders for the construction, reconstruction, alteration, remodeling, repair or demolition of public works, municipal ordinances, and the rules and regulations of all authorities having jurisdiction over construction of the project shall apply to the Contract throughout, including Chapter 30, Sections 39L through 39P, Section 39R and Chapter 82, Section 40, Amendments, and they will be deemed to be included in the Contract the same as though herein written out in full.

Applicable provisions of Massachusetts General Laws and Regulations and/or the United States Code and Code of Federal Regulations govern this Contract and any provision in violation of the foregoing shall be deemed null, void and of no effect. Where conflict between Code of Federal Regulations and State Laws and Regulations exist, the more stringent requirement shall apply.

ARTICLE 14 METHOD OF AWARD-LOWEST RESPONSIBLE BIDDER:

Bids will be compared on the basis of the experience and competence of the bidder and on the basis of the totals of the quantities listed in the proposal under the enumerated items at the unit prices or lump sums bid for these items. The contract will be awarded to the lowest responsible and eligible bidder meeting the minimum qualifications and experience requirements. However, the Owner may reject any and all bids if it is in the public interest to do so.

The Owner shall award the contract to the lowest responsible (in Owner's sound discretion demonstrably possessing the skill, ability, qualifications, experience and integrity necessary to faithfully perform the worked called for by the Contract, based upon determination of competent workmanship and financial soundness) and eligible (able to meet the requirements set forth in the Bidding Documents) Bidder within 30 Business Days after the date of the opening of the Bids. If the Bidder selected as the contractor fails to perform its agreement to execute a contract in accordance with the terms of its Bid and furnish a performance bond and a labor and materials or payment bond, as required by the Bidding Documents, an award shall be made to the next lowest responsible and eligible Bidder. The ninety day time limit shall not be applicable to a second or subsequent award made after the expiration of the time limit with the consent of the next lowest responsible and eligible bidder, and made because the original award made within the time limit was invalid, or because a bidder failed to execute the Agreement or to provide a performance and labor and materials or payment bond.

Any Bidder who fails to perform its agreement to execute a contract and furnish a performance bond and labor and materials or payment bond shall forfeit its Bid deposit which shall become property of the Owner, but shall not exceed the difference between its Bid price and the Bid price of the next lowest responsible and eligible bidder.

The Owner will notify the selected Bidder and all other Bidders of the award.

The Owner will submit, to the selected Bidder, a Notice of Award and at least six unsigned copies of the agreement between the Springfield Water and Sewer Commission and the Contractor. The selected Bidder will be required to return to the Springfield Water and Sewer Commission within ten (10) business days of the date of notice of award, all copies of the Agreement between the Springfield Water and Sewer Commission and the Contractor executed by the Contractor together with, its performance bond, its labor and materials or payment bond; all required certificates of insurance; and any other required forms.

Failure of the Bidder to submit all the required documents in a timely fashion may result

in the withdrawal of the award. The Owner will return one fully signed copy of the Agreement to the Contractor. Time is of the essence in the performance of the Agreement.

In the event there is a discrepancy between the unit prices and the extended totals, the unit prices shall govern. In the event that there is a discrepancy between the unit prices written in words and written in figures, the unit prices written in words shall govern. No bid will be accepted which does not contain a unit price or lump sum as indicated for each of the applicable items enumerated in the proposal form.

Bids for any item of work contained in the bid proposal which are abnormally high or low may be cause for rejection by the Owner of the total bid. Due to the nature of this contract where the exact scope of work cannot be exactly defined, unbalanced bids may not be acceptable and therefore may be rejected.

ARTICLE 15 AFFIRMATIVE ACTION PROGRAM:

Minimum Wage Rates as determined by the Executive Office of Labor and Workforce Development under the provision of the Massachusetts General Laws, Chapter 149, Sections 26 to 27D, as amended, apply to this project. It is the responsibility of the contractor, before bid opening, to request, if necessary, any additional information on Minimum Wage Rates for those trades people who may be employed for the proposed work under this contract. Federal Minimum Wage Rates as determined by the United States Department of Labor under the Davis-Bacon Act also apply to this project.

Disadvantaged Business Enterprise (DBE) goals are applicable to the total dollars paid to the construction contract. The goals for this project are a minimum of **4.8 percent D/MBE participation and 6.9 percent D/WBE participation by certified DBEs**. The two low bidders shall submit completed DBE forms (EEO-DEP-190C, EEO-DEP-191C and the DBE Certification of United States Citizenship form) by the close of business on the third business day after bid opening. Failure to comply with the requirements of this paragraph may be deemed to render a proposal non-responsive. No waiver of any provision of this section will be granted unless approved by the Department of Environmental Protection (MassDEP).

ARTICLE 16 ITEMS NOT LISTED IN THE BID:

The lump sum and unit price items listed in the bid form are intended to cover all items of work to be done and materials and work to be furnished to fully complete the work in accordance with the Specifications, Details, and Drawings. Appurtenant items of work shown on the Drawings or Details or specified or required, and parts of the work, materials, and equipment not listed separately and not shown or specified but necessary

to complete the work but not listed separately under list of items in the bid, shall be provided and shall be considered and included in the cost of payment under the various applicable bid items of work, and no separate payment will be made for such items. It shall be the responsibility of the Contractor to verify any missing or incomplete data.

ARTICLE 17 BALANCED BIDDING:

Bids should be made on each separate item of work shown in the bid (proposal) with reasonable relation to the probable cost of doing the work included in such items, and the right is reserved to reject wholly any bid in case an item or items thereof are obviously unbalanced or appear to the Owner to be so unbalanced as to affect or to be liable to affect adversely any interests of the Owner. The attention of the bidder is called to the fact that unbalancing of bids may adversely affect the Contractor if certain portions of the work are increased or decreased as provided in the Specifications, Details, and Drawings.

ARTICLE 18 PRICES:

Bidder shall state the proposed price for the work; which price is to cover all the expenses incidental to the completion of the work in full conformity with the Contract, Specifications and Details, Special Provisions, and Drawings.

In the event that there is a discrepancy between the unit prices and the extended totals, the unit prices shall govern. In the event that there is a discrepancy between the unit prices written in words and written in figures, the unit prices written in words shall govern. No bid will be accepted which does not contain a unit price or lump sum as indicated for each of the applicable items enumerated in the Proposal Form.

ARTICLE 19 UNCERTAINTY OF QUANTITIES:

The quantities listed in the bid (Proposal) are approximate and are given only for use in comparing bids and to indicate approximately the total amount of the Contract, and the Owner does not expressly or by implication represent that the actual amounts of work will even approximately correspond therewith, but does call particular attention to the uncertainty in the quantities of the work involved which cannot be predicted in advance. The work under certain items may be materially greater or less than those given in the bid as may be necessary in the judgment of the Owner to complete the work contemplated in the Contract. Attention is particularly called to the fact that the quantity of work to be done under some bid items may be largely dependent on subsurface ground conditions encountered and, therefore, the quantities of work to be done under the various items may vary substantially from the estimated quantities or may even be omitted.

Under the Contract, the Owner reserves the right to increase or decrease the approximate quantities for, or to omit entirely any of the items as listed in the bid.

Only such quantities of the respective items of work actually performed and accepted will be paid for.

ARTICLE 20 ACCESS TO SITE:

Representatives of the Owner shall have access to the work wherever it is in preparation or progress, and the Contractor shall provide proper facilities for such access and inspection.

ARTICLE 21 CONTRACT:

A contract in the form set forth hereinafter will be required to be executed by the successful bidder and the Springfield Water and Sewer Commission. The attention of all bidders, therefore, is called to the form of said proposed contract and the provisions thereof. Two (2) executed original counterparts of the contract security bonds will be required.

ARTICLE 22 WORK ON STATE MUNICIPAL, AND PRIVATE PROPERTY:

Particular attention is hereby directed to the fact that portions of the work included under this Contract may be done within the limits of properties that are State-owned, municipally-owned, and/or privately-owned. The Contractor shall be responsible for coordinating the prosecution of the work of this Contract with the various property owners, and for providing the work in accordance with any additional requirements as specified herein.

ARTICLE 23 PAYMENT FOR DRAWINGS AND DOCUMENTS:

See Invitation to Bid.

ARTICLE 24 CORRECTIONS:

Erasures or other changes in the bid must be explained or noted over the signature of the bidder.

ARTICLE 25 INSURANCE REQUIREMENTS:

The Contractor agrees to indemnify and defend the Springfield Water and Sewer Commission, AECOM Technical Services, Inc., their agents, and employees, and hold them harmless from loss, liability, damage, claims, demands and costs and expenses and reasonable in-house and outside attorney's fees, of any person or persons arising out of, or based upon, personal injury, death or property damage resulting directly from any negligent act or omission on the part of the Contractor, its agents, employees, subcontractors, and licensees in connection with this contract. The Owner and Engineer reserves the right to select outside counsel, subject to the approval of the Contractor and not to be unreasonably withheld or delayed, to defend any such actions.

The Springfield Water and Sewer Commission, as well as its Engineer, AECOM shall be named as an ADDITIONAL INSURED and as a certificate holder on each of the insurance policies obtained pursuant to this contract.

Upon execution of the contract, the Contractor will provide copies of certificate of insurance to the Springfield Water and Sewer Commission.

The Bidder's attention is directed to Article 5 "BONDS AND INSURANCE" contained in the General Conditions and in the Supplementary Conditions.

ARTICLE 26 REQUIREMENTS FOR FOREIGN CORPORATIONS:

The attention of all bidders is called to the provision of the General Laws, Chapter 30, Section 39L, as amended by Chapter 3 of the Acts of 1967, which provides that awarding authority may not enter into a contract for construction work and may not approve as a subcontractor furnishing labor and materials for a part of any such work a foreign corporation which has not filed with the awarding authority a certificate of the State Secretary of the Commonwealth of Massachusetts stating that such corporation has complied with Sections 3 and 5 of Chapter 181 and the date of such compliance. The term "foreign corporation" means a corporation not incorporated under the laws of the Commonwealth of Massachusetts.

ARTICLE 27 PRE-CONSTRUCTION CONFERENCE:

The Contractor shall attend a pre-construction conference scheduled by the Owner after award of the contract, but prior to the actual commencement of work at the site. One item of discussion will be the Contractor's construction schedule.

In planning the Contractor's construction schedule the Contractor is invited to attend other pre-construction conferences which the Owner may conduct for other contiguous construction projects.

ARTICLE 28 TRAFFIC CONTROL AND PEDESTRIAN SAFETY:

The Bidder's attention is directed to the Contract requirements set forth in Sections 01046 Control of Work and 01063 Miscellaneous Requirements of the Technical Specifications.

ARTICLE 29 MINIMUM WAGE RATES

Minimum Wage Rates as determined by the Commissioner of Department of Workforce Development under the provision of the Massachusetts General Laws, Chapter 149, Sections 26 to 27D, as amended, apply to this project. It is the responsibility of the contractor, before bid opening, to request, if necessary, any additional information on Minimum Wage Rates for those trades people who may be employed for the proposed work under this contract. Federal Minimum Wage Rates as determined by the United States Department of Labor under the Davis-Bacon Act also apply to this project.

Added by St. 1973, c. 1164.

IMPORTANT - READ CAREFULLY

If the bidder is NOT subject to the Massachusetts Workers' Compensation Law, M.G.L. c. 152, the bidder MUST complete and submit with its bid the following affidavit entitled "WORKERS' COMPENSATION INSURANCE COVERAGE." (See page 00100-19)

FAILURE TO SUBMIT THE AFFIDAVIT MAY RESULT IN THE REJECTION OF YOUR BID.

ARTICLE 30 GUARANTEE

The contractor guarantees that the Work and Services to be performed under the Contract, and all workmanship, materials and equipment performed, furnished, used or installed in the construction of the same shall be free from defects and flaws, and shall be performed and furnished in strict accordance with the Drawings, Specifications, and other contract documents, that the strength of all parts of all manufactured equipment shall be adequate and as specified and that the performance test requirements of the Contract shall

be fulfilled. This guarantee shall be for a period of one year from and after the date of completion and acceptance of the Work as stated in the final estimate. If part of the Work is accepted in accordance with that subsection of this AGREEMENT titled "Partial Acceptance", the guarantee for that part of the Work shall be for a period of one year from the date fixed for such acceptance.

If at any time within the said period of guarantee any part of the Work requires repairing, correction or replacement, the Owner may notify the contractor in writing to make the required repairs, correction or replacements. If the Contractor neglects to commence making such repairs, corrections or replacements to the satisfaction of the Owner within seven (7) days from the date of receipt of such notice, or having commenced fails to prosecute such Work with diligence, the Owner may employ other persons to make said repairs, correction or replacements, and charge the costs, including compensation for additional professional services, to the Contractor.

ARTICLE 31 MANUFACTURER'S EXPERIENCE:

Whenever it is written that an equipment manufacturer must have a specified period of experience with his product, equipment which does not meet the specified experience period can be considered if the equipment supplier or manufacturer is willing to provide an "Efficiency Guarantee Bond" or cash deposit for the duration of the specified time period which will guarantee replacement of that equipment in the event of failure.

ARTICLE 32 MASSACHUSETTS SALES TAX AND USE TAX:

Materials and equipment purchased and installed for this project is exempt from Massachusetts Sales and Use Tax. The Bidder shall take this into account when calculating the bid. A tax exemption number will be provided to the Contractor.

ARTICLE 33 SAFETY AND HEALTH REGULATIONS:

This project is subject to the Safety and Health Regulations of the U.S. Department of Labor set forth in Title 29 CFR, Part 1926 and to all subsequent amendments, and to any applicable Massachusetts regulations. Contractors shall be familiar with the requirements of these regulations.

ARTICLE 34 OSHA SAFETY TRAINING – CHAPTER 306 OF THE ACTS OF 2004

All Contractor employees and sub-contractor employees to be employed at the worksite will have successfully completed a course in construction safety and health approved by the United States Occupational Safety and Health Administration that is a least 10 hours in duration at the time the employee begins work and shall furnish documentation of successful completion of said course with the first certified payroll report for each employee.

ARTICLE 35 AMERICAN IRON AND STEEL REQUIREMENTS:

This project is subject to the American Iron and Steel requirements of P.L. 113-76, the Consolidated Appropriations Act of 2014.

ARTICLE 36 PRICE ADJUSTMENTS:

This Contract contains Base Prices for Diesel Fuel and Gasoline; Liquid Asphalt; and Portland Cement Contained In Cast-in-place Concrete and provisions for price adjustments for those commodities in accordance with Chapter 30, Section 39M of the Massachusetts General Laws. Reference Sections 00811, 00812, 00814 for Price Adjustment Clauses.

The Base Price(s) are specified below and will be updated five days prior to the final bid opening date.

Price adjustments will be paid only when the variance between the Base Price and the Period Price for the month during which the cost is incurred exceeds plus or minus five percent (5%). A price adjustment will either result in additional compensation to the Contractor or repayment to the Commission, depending on whether there is an increase or decrease.

Price adjustments will be based on the actual quantity included in a monthly Application for Payment, as supported by paid invoices, and will be made after the work has been performed, using the applicable Period Price.

The Contractor will be compensated for price adjustments from the allowance bid items 11, 12, and 13 in the Bid Items List in Section 00300.

The Commission will be repaid from retainage.

The entire difference between the Base Price and Period Price for the month in which the cost was incurred will be paid.

Base Prices and basis of payment are as follows:

A. Diesel Fuel and Gasoline

Diesel Fuel - Base Price: $2.852 PER GALLON (including state tax)

Gasoline - Base Price: $2.826 PER GALLON (including state tax)

1. Price adjustments will be based on the Period Price of Gasoline and Diesel Fuel for each monthly period as it appears on the Massachusetts Department of Transportation (MassDOT) website [MassDOT Current Contract Price Adjustments]

2. The price adjustment only applies to actual fuel usage during each month for site dedicated equipment requiring gasoline or diesel fuel, including but not limited to construction equipment, trucks, and bypass pumps.

3. The price adjustment will be determined by multiplying the number of gallons used during the applicable monthly period times the difference between the Base Price and the Period Price of Diesel Fuel or Gasoline.

B. Liquid Asphalt

Base Price - $657.50 PER TON

1. Price adjustments will be based on the New Asphalt Period Price for each monthly period as it appears on the MassDOT website. The Period Price will be posted on the MassDOT website within two (2) business days following receipt of this issue.

2. The Price Adjustment only applies to the actual virgin liquid asphalt content in the mixture placed.

3. The Price Adjustment will be determined by multiplying the number of tons of hot mix asphalt mixtures placed during the applicable monthly period times the liquid asphalt content percentage times the difference between the Base Price and the Period Price of Liquid Asphalt.

C. Portland Cement Contained In Cast-in-place Concrete

Base Price - $181.15 PER TON

1. Price adjustments will only be made on contracts using greater than 100 cubic yards of concrete containing Portland cement.

2. Price adjustments will be based on the Period Price of Portland cement for each monthly period as it appears on the MassDOT website. The Period Price will be posted

on the MassDOT website the Wednesday immediately following the publication of the monthly price in ENR.

3. The price adjustment only applies to the actual Portland cement content in the mix placed based on the approved concrete mix design. No adjustments will be made for any cement replacement materials such as fly ash or ground granulated blast furnace slag.

4. The price adjustment will be based on the variance between the Base Price and the Period Price for the Portland cement component only and will not include transportation or other charges.

5. The price adjustment will be determined by multiplying the number of cubic yards of Portland cement concrete placed during each month times the Portland cement content percentage times the variance between the Base Price and the Period Price of Portland cement.

AFFIDAVIT
WORKERS' COMPENSATION INSURANCE COVERAGE

RE: Contract for _____

Bidder: _____("the BIDDER")

I, _____, _____, do hereby state that:
(print name) (title)

1. I am authorized to sign this document on behalf of the BIDDER and bind the BIDDER hereto;
2. the BIDDER is not subject to the Commonwealth of Massachusetts Workers' Compensation Law, M.G.L. c. 152;
3. in the event the BIDDER is awarded this contract and hires any employees for this contract which would subject it to such insurance law, the BIDDER shall provide the Springfield Water and Sewer Commission with a certificate of insurance indicating workers' compensation insurance coverage pursuant to the specification requirements prior to the commencement of work by those employees; and
4. the BIDDER understands that its failure to comply with the requirement set forth in paragraph 3 may result in the termination of its contract with the Springfield Water and Sewer Commission.

Signed under the penalties of perjury.

Dated: _____

_____

(Signature)

THIS PAGE INTENTIONALLY LEFT BLANK

TAX CERTIFICATION AFFIDAVIT FOR CONTRACTS

Individual Social Security Number	State Identification Number	Federal Identification Number

Pursuant to M.G.L. Ch. 62c. sec. 49a.

Company: _____

P.O. Box (if any): _____ **Street Address Only:** _____

City/State/Zip Code: _____

Telephone Number: _____ **Fax Number:** _____

Please Identify if the bidder/proposer is a:

Corporation _____

Individual _____ **Name of Individual:** _____

Partnership _____ **Names of all Partners:** _____

Limited Liability Company _____ **Names of all Managers:** _____

Limited Liability Partnership _____ **Names of Partners:** _____

Limited Partnership _____ **Names of all General Partners:** _____

Pursuant to M.G.L. c. 62C, Section 49A, I/WE certify under penalties of perjury that I/WE, to my/our best knowledge and belief, have filed all Massachusetts tax returns and paid all Massachusetts taxes as required under law, as well as paid all contributions and payments in lieu of contributions pursuant to M.G.L., c. 151A, Section 19A(b).

I/WE further certify that I/WE have complied with all federal, state and local laws relating to taxes, including but not limited to the withholding and reporting of any income taxes for employees and contractors, and the withholding and remittance of child support.

The contractor must be in compliance **at the time it submits its bid and afterwards if selected as the contractor,** with all Federal, Commonwealth of Massachusetts and Local Tax Laws.

_____
Signature

_____
Social Security or Federal ID No.

_____
Date

YOU MUST FILL THIS FORM OUT COMPLETELY AND YOU MUST FILE THIS FORM WITH YOUR BID/CONTRACT SUBMISSION. TAX AFFIDAVITS THAT ARE NOT SIGNED WILL BE REJECTED.

COLLUSION OR FRAUD STATEMENT FOR PUBLIC CONTRACTS

The undersigned certifies under penalties of perjury that this bid or proposal is in all respects bona fide, fair, and made in good faith without collusion or fraud with any other person. As used in this section the word "person" shall mean any natural person, business, joint venture, partnership, corporation, union, committee, club, any other organization, entity or legal entity, or group of individuals.

By: _____
(Printed Authorized Person's Name)

By: _____
(Authorized Person's Signature)

Its: _____
(Corporate Title)

_____
(Corporate Name)

Date: _____

DEBARMENT DISCLOSURE FORM

PUBLIC CONTRACTS - DEBARMENT
CHAPTER 550, ACTS OF 1991

The said undersigned certifies under penalties of perjury that the said undersigned is not presently debarred from doing public construction work in the Commonwealth of Massachusetts under the provisions of Section 29F of Chapter 29 of the General Laws, or any other applicable debarment provisions of any other Chapter of the General Laws, or any Rule or Regulation promulgated thereunder.

Date: _____

Name of Bidder: _____

By: _____
Signature

_____
Print Name & Title of Person Signing

_____
Address

_____
City, State, ZIP

THIS FORM MUST BE SIGNED & RETURNED WITH YOUR BID OFFER.

EQUAL EMPLOYMENT OPPORTUNITY STATEMENT

It is the policy of the Springfield Water and Sewer Commission not to discriminate against any employee or applicant for employment because of age, race, color, religion, sex, national origin, disability, or political affiliation.

The Springfield Water and Sewer Commission shall insure that applicants are employed and that employees are treated, during employment, without discrimination based on age, race, color, religion, sex, national origin, disability, or political affiliation. Such action shall include, but not limited to, the following: employment, promotion, transfer, recruitment advertising, layoff or termination, rate of pay or other forms of compensation, medical and other benefits, and selection of training, including apprenticeships.

Unanimously Voted May 1, 1997
Springfield Water and Sewer Commission

MASSACHUSETTS STATE REVOLVING FUND
AFFIRMATIVE ACTION (MBE/WBE) REQUIREMENTS

The Bidder/Proposer shall comply with Minority Business Enterprise / Women Business Enterprise (MBE / WBE) requirements of the Massachusetts State Revolving Fund agreements.

The undersigned certifies that the Bidder/Proposer has read the above Springfield Water and Sewer Commission Equal Opportunity Employment Statement and Massachusetts Affirmative Action requirements:

By: _____
(Printed Authorized Person's Name)

By: _____
(Authorized Person's Signature)

Its: _____
(Corporate Title)

_____
(Corporate Name)

Date: _____

OSHA SAFETY TRAINING CERTIFICATION

Chapter 306 of the Acts of 2004
An Act Relative to the Health and Safety on Construction Projects

GENERAL CONTRACTOR'S CERTIFICATION - BID FORM

_____ (Name of General Bidder) hereby certifies that it, and all its subcontractors who are not filed sub-bidders shall:

(1) certify that all employees to be employed at the worksite will have successfully completed a course in construction safety and health approved by the United States Occupational Safety and Health Administration that is at least 10 hours in duration at the time the employee begins work and who shall furnish documentation of successful completion of said course with the first certified payroll report for each employee.

Signed under the penalties of perjury. _____(date)

_____
Signature of authorized representative of contractor

_____
Print name of authorized representative of contractor

RETURN THIS FORM WITH YOUR BID

STATEMENT OF BIDDER'S QUALIFICATIONS

All questions must be answered and the data given must be clear and comprehensive. This statement must be notarized. If necessary, questions may be answered on separate attached sheets. The Bidder may submit any additional information it desires.

The bidder must provide references including telephone number and contact names in response to the questions in this section. References will be used in determining the responsibility of the bidder. The city reserves the right to use itself as a reference.

1. Name of Bidder

_____

2. Business Address

_____

_____

_____

3. The names, titles, residences and Social Security numbers of all persons and parties interested in this Proposal as principals are as follows:

Note: Give the first and last names in full. In the case of corporation, give names of officers and directors; in the case of a partnership, give names of all partners.

IMPORTANT: Be sure residences and Social Security Numbers are listed below.

Name	Title	Home Address	Social Security #

Bidder's Name _____

4. The date the company was organized.

_____

5. If a corporation, where incorporated.

_____

6. How many years have you been engaged in the rehabilitation of PCCP pipe, construction of water pump stations and/or Energy Dissipation Valve chambers, under your present firm or trade name?

_____

7. Please explain the general character of work performed by your company.

_____

_____

_____

_____

8. List all projects that your organization are currently performing or have been awarded at the time of this bid? Provide the following information:

Name and Address of Owner for Whom Work is Being Done	Whether Work Being Done as Contractor or Sub-contractor	Description of Work	Approximate Amount of Contract	Approximate Completion Date of Work

Bidder's Name _____

9. What is your annual gross revenue (last year and projected for the next two years), what is your current revenue commitment (in dollars)?

_____

_____

_____

_____

10. Has your present organization ever failed to complete any work awarded to it? If so, state when, where, and why.

_____

_____

11. Has your present organization ever defaulted on a contract? If so, state when, where, and why.

_____

_____

12. Submit a preliminary project schedule with number of crews and construction sequencing proposed for the project.

13. What project(s) has/have your organization completed of character similar to this project? Provide the following information:

Name and Address of Owner for Whom Work Was Done	State Whether Work Was Done as Contractor or Sub-Description of Work	Approximate Amount of Contract	Approximate Completion Date of Work

_____

Bidder's Name _____

_____

_____

_____

_____

_____

14. Describe equipment available for the performance of this contract by setting forth make, model and year, size, number, and type for each such piece of equipment (a) owned, (b) currently rented or (c) to be rented. Bidder must set forth description of all equipment it plans to use whether rented or owned.

(a) Owned

_____

_____

_____

_____

(b, c) Rented

_____

_____

_____

_____

15. Describe the background and experience of the principal members of your organization, including the officers.

_____

Bidder's Name _____

16. Provide three (3) similar, successfully completed projects within the past five (5) years, involving working within regulated areas and site grading, pipeline rehabilitation, raw water conveyance systems, installation and testing of large diameter pipe and valves of a similar size and scope of the Project. State specific information (size and complexity) including referral and contact information. State specific information (size and complexity) including referral and contact information.

17. Provide three (3) similar, successfully completed projects within the past five (5) years, involving the PCCP repair techniques outlined in the Technical Specifications including CFRP Repairs, Joint Seal Repairs, Concrete and Joint Mortar Repair, Cement Mortar Repair, PCCP Pipe Segment Replacement, confined space entry work. State specific information (size and complexity) including referral and contact information. Experience can be demonstrated through the use of subcontractors that provide these services.

Bidder's Name _____

_____

_____

_____

_____

_____

16~~9~~. Who will be the contractor's project manager? State such person's qualifications. Also list names of any other key and/or supervisory employees who will be participating in this contract and their qualifications (years of experience, etc.).

_____

_____

_____

_____

17~~20~~. Who will be the contractor's full time on-site superintendent? Submit such person's resume for review by Owner/Engineer. The Project Superintendent must have a minimum of 10 years construction experience; demonstrate ability to manage a budget, schedule, and crew coordination; demonstrate experience in specialty pipeline repair techniques, subcontractor management, confined space entry management, and permit compliance. Also list names of other key and/or supervisory employees who will be participating in this contract and their qualifications (years of experience, etc.).

_____

_____

_____

_____

18~~21~~. Submit the number, size and equipment of crews to be established to complete the work as specified. Include specialty subcontractors required for pipeline repairs.

Bidder's Name _____

_____

_____

_____

_____

19~~22~~. Give below the name and address of one or more banks and the contact person's name(s) and phone number(s), at the bank(s), which have information that would enable them to advise regarding the financial ability of your company.

Name of Bank / Contact Person Address / Phone Number

_____

_____

2~~3~~0. The apparent low bidder shall furnish a detailed financial statement and furnish any other information that may be required by the Springfield Water and Sewer Commission.

21~~4~~. What is your available credit? The apparent low bidder shall furnish written evidence.

_____

_____

_____

22~~5~~. Employer Identification No. (Treasurer's No.)

_____

23~~6~~. Give below the name and address of the bidder's Surety / Bonding company and the contact person's name and phone number, at the Surety / Bonding company, which has information that would enable them to advise regarding the status of existing bonds and bonding capability of your company.

Bidder's Name _____

Name of Surety or Bonding Company / Contact Person Address / Phone Number

_____

_____

24~~7~~. Give below the name, company (or owner), address and phone number of at least five references (Owner or Engineer/Architect) who have information that would enable them to advise your performance on past or existing projects of the general nature similar to this Project.

Name of Owner or Company / Contact Person Address / Phone Number

_____

_____

_____

_____

_____

28~~5~~. Is your organization currently or has your organization been previously involved in any lawsuits regarding work performed within the last three years? If so, please provide the approximate value of dispute, and name(s) and address(s) of opposing party.

Name of Opposing Party / Contact Person Address / Phone Number

_____

_____

_____

_____

Bidder's Name _____

269. Name, Signature, Social Security number and Title of officer preparing this proposal.

Name_____

Signature_____

Social Security
Number_____Title_____

Bidder's Name _____

2730. The undersigned hereby authorizes and requests any person, firm or corporation to furnish any information requested by the Springfield Water and Sewer Commission in verification of the recitals comprising this Statement of Bidder's Qualifications.

Dated at _____ this _____day of _____, 20_____

_____
(Signature)

Tel. No._____

By _____

Title_____

State of _____)

County of_____)

_____, being duly sworn,

deposes and says that he/she is

_____ of

_____
(Name of Organization)

and that the answers to the foregoing questions and all statements therein contained are true and correct.

Subscribed and sworn to before me this _____ day of _____, 20_____

_____
(Notary Public)

My commission expires _____, 20_____

Bidder's Name _____

AMERICANS WITH DISABILITIES ACT

Americans With Disabilities Act (42 U.S.C. 12131)
Section 504 of the Rehabilitation Act of 1973

The Americans with Disabilities Act (the "Act") applies to all employers of fifteen or more employees. All contractors that are subject to the Act must comply with its provisions. In further compliance with the Act, all Contractors who enter into contracts with the Springfield Water and Sewer Commission are prohibited from discrimination against the Springfield Water and Sewer Commission's employees, regardless of the size of the Contractor.

The Act protects against discrimination on the basis of "disability", which is defined as a physical or mental impairment that substantially limits at least one "major life activity"; discrimination against a person having a history or record of such impairment; and discrimination against an individual regarded - even if inaccurately - as having such an impairment. The Act also expressly prohibits discrimination that is based on an individual's relationship or association with a disabled person.

The bidder shall not discriminate against any qualified employee or job applicant with a disability. A "qualified" employee or job applicant is an individual with a disability who satisfies the requisite skill, experience, education and other job-related requirements of the employment position such individual holds or desires, and who with or without reasonable accommodations, is able to perform the essential functions of the job.

By submitting its bid, the bidder certifies to the Springfield Water and Sewer Commission that it understands and will comply with all applicable provisions of the Act, including compliance with applicable provisions of Section 504 of the Rehabilitation Act of 1973, if the bidder is receiving federal funds.

END OF SECTION

THIS PAGE INTENTIONALLY LEFT BLANK

CORPORATE CERTIFICATION

I _____ a resident of _____ in the
** (Clerk/Secretary) (City/Town)

State of _____ **DO HEREBY CERTIFY** that I am the Clerk/Secretary of
(State)

_____ a Corporation duly organized and existing under and
(Bidder/Proposer)

by virtue of the laws of the State of _____ and that I have custody of the
(State)

records of such Corporation; and that as of the date herein below recited

_____ is the _____
* (Printed Authorized Person's Name) (Corporate Office)

authorized to execute and deliver in the name and on behalf of the Corporation the following:

_____

_____

IN WITNESS WHEREOF, I have hereunto set my hand and affixed the Corporate Seal of such Corporation the _____ day of _____, _____.

(Affix
Seal
Here)

By: _____
** (Clerk / Secretary)

* This must be the name of the person authorized in the Firm's by-laws to sign contracts.

** Since an Officer of the Firm cannot certify himself / herself this document must be signed someone other than the person signing the Contract Agreement.

GENERAL CONTRACTOR'S CERTIFICATION

A contractor will not be eligible for award of a contract unless such contractor has submitted the following certification, which is deemed a part of the resulting contract:

_____

(Contractor Name)

Certifies that they:

1. Will not discriminate in their employment practices;

2. Intend to use the following listed construction trades in the work under the contract:

   _____

   _____

   and

3. Will make good faith efforts to comply with the minority employee and women employee workforce participation ratio goals and specific affirmative action steps contained herein; and

4. Are in compliance with all applicable federal and state laws, rules, and regulations governing fair labor and employment practices; and

5. Will provide the provisions of the "Supplemental Equal Employment Opportunity, Non-Discrimination and Affirmative Action Program" to each and every subcontractor employed on the Project and will incorporate the terms of this Section into all subcontracts and work orders entered into on the Project.

6. Agree to comply with all provisions contained herein.

_____ _____

Signature of authorized representative of Contractor Date

_____

Printed name of authorized representative of Contractor

PROJECTED WORKFORCE CERTIFICATION

THIS FORM MUST BE SUBMITTED WITH YOUR BID

I,
_____

Certify that the following is my projected workforce for this contract:

"42-Inch PCCP Raw Water Conveyance Pipeline and EDV Facility", Westfield, MA

GENERAL CONTRACTOR ESTIMATED # OF NEW HIRES

_____
_____
_____
_____
_____
_____

SUBTRADE ESTIMATED # OF NEW HIRES

_____
_____
_____
_____
_____
_____
_____
_____
_____
_____
_____

Signed under penalties of perjury,

_____

Bidder's Name_____

THIS PAGE INTENTIONALLY LEFT BLANK

See Text Insert
Next Section

BID FORM

PLACE:_____

DATE:_____

Proposal of _____ (hereinafter called "BIDDER")*
(Name of Proposer)

A corporation organized and existing under the laws of the State of _____,*

a partnership, or an individual doing business as _____.

To the SPRINGFIELD WATER AND SEWER COMMISSION, hereinafter called the "Owner."

Bidders:

Raw Water Conveyance Bypass Conveyance Rehabilitation and Energy Dissipation Valve Chamber
SWSC Bid Number: 24-01

The BIDDER, in compliance with your Invitation to Bid for the Springfield Water and Sewer Commission project entitled: **"42-Inch Raw Water Bypass Conveyance Pipeline Rehabilitation and Energy Dissipation Valve Chamber",** Westfield, Massachusetts, having examined the Plans and Specifications with related documents and the site of the proposed Project and being familiar with all of the conditions surrounding the construction of the proposed project, including the availability of materials and labor, hereby proposes to furnish all labor, materials, and supplies and to construct the project in accordance with the Contract Documents within the time set forth therein, and at the prices stated below. These prices are to cover all expenses incurred in performing the work required under the Contract Documents of which this Proposal is a part.

BIDDER hereby agrees to commence work under this Contract on or before a date to be specified, in a written "Notice To Proceed", by the Owner, and to fully complete the project within 548 Calendar Days thereafter as stipulated in the Specifications. No work on holidays will be allowed. Work on Saturdays and/or Sundays will only be allowed with prior City of Springfield and Owner approval. Night work will only be allowed with prior City of Springfield and Owner approval. BIDDER further agrees to pay as liquidated damages the minimum sum of $5,275.00 for each consecutive calendar day thereafter until the Project is Substantially Complete.

A Labor and Material or Payment Bond in the amount of 100% of the total Contract Price must be provided by the General Contractor.

A Performance Bond in the amount of 100% of the total Contract Price must be provided by the

General Contractor.

Bidder acknowledges receipt of the following addenda:

_____

_____

*Insert corporation, partnership, or individual as applicable.

Unit and lump sum prices and extended amounts are to be shown in both words and figures. In case of discrepancy, the amount shown in words will govern.

BASE BID ITEMS

THIS NEEDS TO BE FILLED OUT WITH UNIT/LINE ITEMS

Total amount of Base Bid based on Engineer's estimate of quantities for Items 1 through 37 inclusive.

_____ $_____

(Amount in Words) (Amount in Figures)

BIDDER MUST FILL IN THE UNIT PRICES AND COMPUTE THE TOTALS					
(In case of error or discrepancies "UNIT PRICES Written Words" govern)					
Item No.	**DESCRIPTION OF SCHEDULED ITEM**	**UNIT PRICES Dollar Figure UNIT PRICES Written Words**	**ESTIMATED QTY/ UNIT OF MEASURE**		**TOTAL PRICES Dollar figure**
1	Mobilization and Demobilization *Not to exceed 5 percent of total Bid price		Lump sum		$_____
2	General Requirements		Lump Sum		$_____
3	Construction of Energy Dissipation Valve Chamber		Lump Sum		$_____
4	Procurement of Mokveld Energy Dissipation Valves		3	EA	$_____
5A	Block Retaining Walls – 2FT Height		60	LF	$_____
5B	Block Retaining Walls – 4FT Height		100	LF	

BIDDER MUST FILL IN THE UNIT PRICES AND COMPUTE THE TOTALS					
(In case of error or discrepancies "UNIT PRICES Written Words" govern)					
Item No.	**DESCRIPTION OF SCHEDULED ITEM**	**UNIT PRICES Dollar Figure UNIT PRICES Written Words**	**ESTIMATED QTY/ UNIT OF MEASURE**		**TOTAL PRICES Dollar figure** $_____
5C	Block Retaining Walls – 6FT Height		95	LF	$_____
6	Internal Pipe Joint Testing		624	EA	$_____
7	Pre-Repair HD CCTV and LiDAR Defect Mapping Inspection		Lump Sum		$_____
8	PCCP Internal Joint Repair with Mortar, per pipe joint with designated repairs		70	EA	$_____
9	Install PCCP Internal Joint Compression Seal without Joint Repair		120 joint seals	EA	$_____

BIDDER MUST FILL IN THE UNIT PRICES AND COMPUTE THE TOTALS					
(In case of error or discrepancies "UNIT PRICES Written Words" govern)					
Item No.	**DESCRIPTION OF SCHEDULED ITEM**	**UNIT PRICES Dollar Figure UNIT PRICES Written Words**	**ESTIMATED QTY/ UNIT OF MEASURE**		**TOTAL PRICES Dollar figure**
10	Install PCCP Internal Joint Compression Seal with Joint Repair		55 joint seals with joint repair	EA	$_____
11	Remove and Replace Manway		11 manways	EA	$_____
12	Remove and Replace PCCP Pipe Segment [Standard Length of PCCP is 16 feet but varies, refer to Drawings]		19 pipe segments	EA	$_____
13	Install Internal Compression Pipe Seal		8 pipe seals	EA	$_____
14	Repair Concrete Core Locally Along Pipe Barrel (Crown Region), per pipe designated for repair [Standard Length of PCCP is 16 feet but varies, refer to Drawings]		7 pipes	EA	$_____
15	Repair Concrete Core Along Full Length of Pipe Barrel (Crown Region), per pipe designated for repair [Standard		2 pipes	EA	$_____

BIDDER MUST FILL IN THE UNIT PRICES AND COMPUTE THE TOTALS					
(In case of error or discrepancies "UNIT PRICES Written Words" govern)					
Item No.	**DESCRIPTION OF SCHEDULED ITEM**	**UNIT PRICES Dollar Figure UNIT PRICES Written Words**	**ESTIMATED QTY/ UNIT OF MEASURE**		**TOTAL PRICES Dollar figure**
	Length of PCCP is 16 feet but varies, refer to Drawings]				
16	Repair Concrete Core Along Full Length of Pipe Barrel (Invert Region), per pipe designated for repair [Standard Length of PCCP is 16 feet but varies, refer to Drawings]		140 pipes	EA	$_____
17	Repair Concrete Cracks in Pipe Barrel, per pipe designated for repair [Standard Length of PCCP is 16 feet but varies, refer to Drawings]		5 pipes	EA	$_____
18	Install Carbon Fiber Reinforced Polymeric (CFRP) Composites, per pipe designated for repair [Standard Length of PCCP is 16 feet but varies, refer to Drawings]		4 pipes	EA	$_____
19	Install Glass Fiber Reinforced Polymeric (GFRP) Composites, per pipe designated for repair [Standard Length of PCCP is 16 feet but varies, refer to Drawings]		52 pipes	EA	$_____
20	Repaint Steel access Ring and Lids in Old Manway		1 External,	EA	$_____

BIDDER MUST FILL IN THE UNIT PRICES AND COMPUTE THE TOTALS					
(In case of error or discrepancies "UNIT PRICES Written Words" govern)					
Item No.	**DESCRIPTION OF SCHEDULED ITEM**	**UNIT PRICES Dollar Figure UNIT PRICES Written Words**	**ESTIMATED QTY/ UNIT OF MEASURE** 1 Internal		**TOTAL PRICES Dollar figure**
21	Remove Pipe and Install New Manway		2	EA	$_____
22	Repair Steel Pipe Cement Mortar Lining (CML) Cracks, per pipe designated for repair [Standard Length of PCCP is 16 feet but varies, refer to Drawings]		6 pipes	EA	$_____
23	Repair Steel Pipe Cement Mortar Lining (CML), per pipe designated for repair [Standard Length of PCCP is 16 feet but varies, refer to Drawings]		2 pipes	EA	$_____
24	Install New Air Release Valves [42-Inch Pipe Only]		14 valves	EA	$_____
25	Install Vaults at Air Valves and Manways		15 vaults	EA	$_____

BIDDER MUST FILL IN THE UNIT PRICES AND COMPUTE THE TOTALS					
(In case of error or discrepancies "UNIT PRICES Written Words" govern)					
Item No.	**DESCRIPTION OF SCHEDULED ITEM**	**UNIT PRICES Dollar Figure UNIT PRICES Written Words**	**ESTIMATED QTY/ UNIT OF MEASURE**		**TOTAL PRICES Dollar figure**
26	Furnish and Install Remote Transient Pressure Monitors		4	EA	$_____
27	Furnish and Install 12 inch Access/ Launch and Retrieval Locations		2	EA	$_____
28	Post-Repair HD CCTV and LiDAR Defect Mapping Inspection		Lump Sum		$_____
29	Internal Free-Swimming Leak and Air Pocket Detection Inspection		Lump Sum		$_____
30	Erosion and Sediment Control		4100	LF	$_____

BIDDER MUST FILL IN THE UNIT PRICES AND COMPUTE THE TOTALS					
(In case of error or discrepancies "UNIT PRICES Written Words" govern)					
Item No.	**DESCRIPTION OF SCHEDULED ITEM**	**UNIT PRICES Dollar Figure UNIT PRICES Written Words**	**ESTIMATED QTY/ UNIT OF MEASURE**		**TOTAL PRICES Dollar figure**
31	Rock Excavation and Disposal		1300	CY	$_____
32	Final Cleaning and Flushing		Lump Sum		$_____
33A	Temporary Pavement		6,200	SF	$_____
33B	Permanent Pavement		10,000	SF	
34A	Upland Restoration [Buffer zone and lawn disturbances]		85,000	SF	$_____

BIDDER MUST FILL IN THE UNIT PRICES AND COMPUTE THE TOTALS					
(In case of error or discrepancies "UNIT PRICES Written Words" govern)					
Item No.	**DESCRIPTION OF SCHEDULED ITEM**	**UNIT PRICES Dollar Figure UNIT PRICES Written Words**	**ESTIMATED QTY/ UNIT OF MEASURE**		**TOTAL PRICES Dollar figure**
34B	Wetland Restoration		4,400	SF	$_____
35	Asphalt Price Adjustment	$20,000 Twenty Thousand Dollars	Allowance		$__20,000_____
36	Portland Cement Price Adjustment	$20,000 Twenty Thousand Dollars	Allowance		$__$20,000_____
37	Gasoline and Diesel Fuel Price Adjustment	$20,000 Twenty Thousand Dollars	Allowance		$_20,000_____

The above unit and lump sum prices shall include all labor, equipment, materials, overhead, profit, insurance, and other costs to cover the finished work of the several kinds called for.

NOTE: The award will be based upon the Proposed Contract Price and will be made in accordance with the provisions of MGL Chapter 30, Section 39M. The quantities designated throughout the Bid Schedule, however, are estimates only, and the Unit Price provided for a category of Work shall be the basis for the entire term of the Contract, for additions to or deletions from the Total Contract Price for Work of the category, so long as the number of units of work remains within fifteen percent (15%) of the estimated quantity or twenty five (25)% of the estimated quantity for items relating to soil management, handling, and/or disposal (Items 1 through 12).

This project is being bid under Chapter 30, Section 39M of the Massachusetts General Laws. The Bidder understands that the Owner reserves the right to reject any or all bids and to waive any informalities in the bidding. The Bidder understands that the Owner shall determine if this bid is responsible and eligible in accordance with M.G.L. c.30, s39M based in part on information contained in the Statement of Bidder's Qualifications submitted as part of this bid form.

The time period for holding bids, where Federal approval is not required is 30 days, Saturdays, Sundays and legal holidays excluded, after the opening of bids and where Federal approval is required, the time period for holding bids is 30 days, Saturdays, Sundays and holidays excluded after Federal approval. Upon receipt of written notice of the acceptance of this bid, Bidder shall execute the formal Contract attached within 10 calendar days and deliver a Performance and Payment Surety Bonds as required in the General Conditions. The Bid Security (5% of Bid) attached in the sum of _____Dollars, ($_____) is to become the property of the Owner in the event the Contract and Bond are not executed within the time above set forth as liquidated damages for the delay and additional expense to the Owner caused thereby.

The undersigned hereby declares that he has carefully examined the site of the proposed Work and fully informed and satisfied himself as to the conditions there existing, the character and requirements of the proposed Work, the difficulties attendant upon its execution and the accuracy of all estimated quantities stated in this BID FORM, and he has carefully read and examined the Drawings, the annexed proposed CONTRACT and the Specifications and other Contract Documents therein referred to and knows and understands the terms and provisions thereof.

The undersigned hereby declares that he understands that information relative to subsurface and other conditions, natural phenomena, existing pipes and other structures (surface and/or subsurface) has been furnished only for his information and convenience without any warranty or guarantee, expressed or implied, that the subsurface and/or other conditions, natural phenomena, existing pipes and other structures (surface and/or subsurface) actually encountered will be the same as those shown on the Drawings or in any of the other Contract Documents and he agrees that he shall not use or be entitled to use any such information made available to him through the Contract Documents or otherwise or obtained by him in his own examination of the site, as a basis of or ground for any claim against the Owner or the Engineer arising from or by reason of any variance which may exist between the aforesaid information made available to or acquired by him and the subsurface and/or other conditions, natural phenomena, existing pipes and other structures (surface and/or subsurface) actually encountered during the construction work, and he has made due allowance therefore in this Bid.

The undersigned hereby declares that he understands that the quantities of work tabulated in this Bid or indicated on the Drawings or in the Specifications or other Contract Documents are only approximate and are subject to increase or decrease as deemed necessary by the Engineer.

The undersigned agrees that, if this Bid is accepted he will contract with the Owner, as provided in the copy of the Contract Documents deposited in the office of the Engineer, this BID FORM being part of said Contract Documents, and that he will perform all the work and furnish all the materials and equipment, and provide all labor, services, plant, machinery, apparatus, appliances, tools, supplies and all other things required by the Contract Documents in the manner and within the time therein prescribed and according to the requirements of the Engineer as therein set forth, and that he will take in full payment therefore the lump sum or unit price applicable to each item of the Work as stated in the schedule below.

The undersigned certifies under penalties of perjury that no officer, agent, or employee of the Owner is directly or indirectly interested in this BID.

The undersigned certifies under penalties of perjury that this bid is in all respects bona fide, fair and made without collusion or fraud with any other person. As used in this paragraph the word "person" shall mean any natural person, joint venture, partnership, corporation or other business or legal entity.

The undersigned hereby certifies that he is able to furnish labor that can work in harmony with all other elements of labor employed or to be employed in the work.

Applicable provisions of Massachusetts General Laws and Regulations and/or the United States Code and Code of Federal Regulations govern this Contract, and any provision violation of the foregoing shall be deemed null, void and of no effect. Where conflict between Code of Federal Regulations and State Laws and Regulations exist, the more stringent requirement shall apply.

Pursuant to M.G.L.c.62C, s49A the undersigned certifies under the penalties of perjury that the Bidder, to the Bidder's best knowledge and belief, has filed all state tax returns and paid all State Taxes required under law.

The undersigned bidder hereby certifies he/she will comply with the specific affirmative action steps contained in the EEO/AA provisions of this Contract, including compliance with the Disadvantaged Business Enterprise provisions as required under these contract provisions. The contractor receiving the award of the contract shall incorporate the EEO/AA provisions of this contract into all subcontracts and purchase orders so that such provisions will be binding upon each subcontractor or vendor.

The undersigned further certifies under penalty of perjury that the said undersigned is not presently debarred from doing public construction work in the Commonwealth under the provisions of Section Twenty-Nine F of Chapter Twenty-Nine, or any other applicable debarment provisions of any other Chapter of the General Laws or any rule or regulation promulgated thereunder; and is not presently debarred, suspended, proposed for debarment, declared ineligible, or voluntarily excluded from covered transactions by any Federal department or agency.

Bidders must fully comply with Subpart C of 2 CFR Part 180 and 2 CFR Part 1532, entitled responsibilities of Participants Regarding transactions (Doing Business with Other Persons). Contractors, subcontractors, or suppliers that appear on the Excluded Parties List System at *www.usgovxml.com/dataservice.aspx?ds=EPLS* are not eligible for award of any contracts funded by the Massachusetts State Revolving Fund. This is project is funded by the Water Infrastructure Finance and Innovation Act (WIFIA), and potential bidder's attention should be drawn to the associated WIFIA requirements contained in the bidding documents.

The undersigned bidder agrees that the undersigned will fully comply with Subpart C of 2 CFR Part 180 and 2 CFR Part1532, entitled Responsibilities of Participants Regarding Transactions (Doing Business with Other Persons). The undersigned shall not award any subcontracts or purchase any materials from suppliers that appear on the Excluded Parties List System. The undersigned shall include this requirement in each subcontract and require it to be included in all subcontracts regardless of tier. The undersigned shall maintain reasonable records to demonstrate compliance with these requirements.

Respectfully submitted,

Date:_____ Name of General Bidder: _____

Federal Employer Identification Number : _____

By (signature) : _____

Title and Name of Person Signing the Bid : _____

Business Address : _____

City, State, and Zip Code : _____

CERTIFICATE OF AUTHORITY

At a duly authorized meeting of the Board of Directors of the _____
(name of corporation)

held on _____ Directors were present or waived notice, it was voted that _____
(date)

_____of this company be and hereby is authorized to execute contracts and bonds
(name and title)

in the name and behalf of said company, and affix its Corporate Seal thereto, and such execution of any contract or bond of obligation in this company's name on its behalf of such _____
(OFFICER)

under seal of the company shall be valid and binding upon this company.

A TRUE COPY,

ATTEST: _____

Place of Business:

_____

_____

I hereby certify that I am the _____ of the _____
(Title) (Name of Corporation)

that _____ is the duly elected _____ of said
(Name of Officer) (Title)

company, and the above vote has not been amended or rescinded and remains in full force and effect as of the date of this contract.

Signature: _____

(Corporate Seal) Name/Title: _____

Date: _____

COMMONWEALTH OF MASSACHUSETTS, SS. _____, 2023

Then personally appeared the above named _____and acknowledged the foregoing instrument to be his/her free act and deed before me.

NOTARY PUBLIC_____

My commission expires:_____

THE BIDDER SHALL STATE THE NAMES OF ALL SUBCONTRACTORS THAT HE/SHE PROPOSES TO USE

PROPOSED SUBCONTRACTORS

If none, write "none" _____.

*Description of Work _____

Proposed Subcontractor
Name _____

Address_____

*Description of Work_____

Proposed Subcontractor
Name _____

Address_____

*Description of Work _____

Proposed Subcontractor
Name _____

Address_____

*Description of Work_____

Proposed Subcontractor
Name _____

Address_____

*Insert description of work and subcontractors' names as may be required.

This is to certify that the names of the above-mentioned subcontractors are submitted with full knowledge and consent of the respective parties. The Bidder warrants that none of the proposed subcontractors have any conflict of interest as respects this Contract.

Bidder_____
(Name)

By _____
(Signature and Title)

THIS PAGE INTENTIONALLY LEFT BLANK

BID FORM

PLACE:_____

DATE:_____

Proposal of _____ (hereinafter called "BIDDER")*
(Name of Proposer)

A corporation organized and existing under the laws of the State of _____,*

a partnership, or an individual doing business as _____.

To the SPRINGFIELD WATER AND SEWER COMMISSION, hereinafter called the "Owner."

Bidders:

Raw Water Conveyance Bypass Conveyance Rehabilitation and Energy Dissipation Valve Chamber
SWSC Bid Number: 24-01

The BIDDER, in compliance with your Invitation to Bid for the Springfield Water and Sewer Commission project entitled: **"42-Inch Raw Water Bypass Conveyance Pipeline Rehabilitation and Energy Dissipation Valve Chamber",** Westfield, Massachusetts, having examined the Plans and Specifications with related documents and the site of the proposed Project and being familiar with all of the conditions surrounding the construction of the proposed project, including the availability of materials and labor, hereby proposes to furnish all labor, materials, and supplies and to construct the project in accordance with the Contract Documents within the time set forth therein, and at the prices stated below. These prices are to cover all expenses incurred in performing the work required under the Contract Documents of which this Proposal is a part.

BIDDER hereby agrees to commence work under this Contract on or before a date to be specified, in a written "Notice To Proceed", by the Owner, and to fully complete the project within 548 Calendar Days thereafter as stipulated in the Specifications. No work on holidays will be allowed. Work on Saturdays and/or Sundays will only be allowed with prior City of Springfield and Owner approval. Night work will only be allowed with prior City of Springfield and Owner approval. BIDDER further agrees to pay as liquidated damages the minimum sum of $5,275.00 for each consecutive calendar day thereafter until the Project is Substantially Complete.

A Labor and Material or Payment Bond in the amount of 100% of the total Contract Price must be provided by the General Contractor.

A Performance Bond in the amount of 100% of the total Contract Price must be provided by the General Contractor.

Bidder acknowledges receipt of the following addenda:

_____

_____

*Insert corporation, partnership, or individual as applicable.

Unit and lump sum prices and extended amounts are to be shown in both words and figures. In case of discrepancy, the amount shown in words will govern.

BASE BID ITEMS

THIS NEEDS TO BE FILLED OUT WITH UNIT/LINE ITEMS

Total amount of Base Bid based on Engineer's estimate of quantities for Items 1 through 37 inclusive.

_____ $_____
(Amount in Words) (Amount in Figures)

BIDDER MUST FILL IN THE UNIT PRICES AND COMPUTE THE TOTALS					
(In case of error or discrepancies "UNIT PRICES Written Words" govern)					
Item No.	**DESCRIPTION OF SCHEDULED ITEM**	**UNIT PRICES Dollar Figure UNIT PRICES Written Words**	**ESTIMATED QTY/ UNIT OF MEASURE**		**TOTAL PRICES Dollar figure**
1	Mobilization and Demobilization *Not to exceed 5 percent of total Bid price		Lump sum		$_____
2	General Requirements		Lump Sum		$_____
3	Construction of Energy Dissipation Valve Chamber		Lump Sum		$_____
4	Procurement of Mokveld Energy Dissipation Valves		3	EA	$_____
5A	Block Retaining Walls – 2FT Height		60	LF	$_____

5B	Block Retaining Walls – 4FT Height		100	LF	$_____
5C	Block Retaining Walls – 6FT Height		95	LF	$_____
6	Internal Pipe Joint Testing		624	EA	$_____
7	Pre-Repair HD CCTV and LiDAR Defect Mapping Inspection		Lump Sum		$_____
8	PCCP Internal Joint Repair with Mortar, per pipe joint with designated repairs		70	EA	$_____
9	Install PCCP Internal Joint Compression Seal without Joint Repair		120 joint seals	EA	$_____

10	Install PCCP Internal Joint Compression Seal with Joint Repair		55 joint seals with joint repair	EA	$_____
11	Remove and Replace Manway		11 manways	EA	$_____
12	Remove and Replace PCCP Pipe Segment [Standard Length of PCCP is 16 feet but varies, refer to Drawings]		19 pipe segments	EA	$_____
13	Install Internal Compression Pipe Seal		8 pipe seals	EA	$_____
14	Repair Concrete Core Locally Along Pipe Barrel (Crown Region), per pipe designated for repair [Standard Length of PCCP is 16 feet but varies, refer to Drawings]		7 pipes	EA	$_____
15	Repair Concrete Core Along Full Length of Pipe Barrel (Crown Region), per pipe designated for repair [Standard Length of PCCP is 16 feet but varies, refer to Drawings]		2 pipes	EA	$_____

16	Repair Concrete Core Along Full Length of Pipe Barrel (Invert Region), per pipe designated for repair [Standard Length of PCCP is 16 feet but varies, refer to Drawings]		140 pipes	EA	$_____
17	Repair Concrete Cracks in Pipe Barrel, per pipe designated for repair [Standard Length of PCCP is 16 feet but varies, refer to Drawings]		5 pipes	EA	$_____
18	Install Carbon Fiber Reinforced Polymeric (CFRP) Composites, per pipe designated for repair [Standard Length of PCCP is 16 feet but varies, refer to Drawings]		4 pipes	EA	$_____
19	Install Glass Fiber Reinforced Polymeric (GFRP) Composites, per pipe designated for repair [Standard Length of PCCP is 16 feet but varies, refer to Drawings]		52 pipes	EA	$_____
20	Repaint Steel access Ring and Lids in Old Manway		1 External, 1 Internal	EA	$_____
21	Remove Pipe and Install New Manway		2	EA	$_____

22	Repair Steel Pipe Cement Mortar Lining (CML) Cracks, per pipe designated for repair [Standard Length of PCCP is 16 feet but varies, refer to Drawings]		6 pipes	EA	$_____
23	Repair Steel Pipe Cement Mortar Lining (CML), per pipe designated for repair [Standard Length of PCCP is 16 feet but varies, refer to Drawings]		2 pipes	EA	$_____
24	Install New Air Release Valves [42-Inch Pipe Only]		14 valves	EA	$_____
25	Install Vaults at Air Valves and Manways		15 vaults	EA	$_____
26	Furnish and Install Remote Transient Pressure Monitors		4	EA	$_____
27	Furnish and Install 12 inch Access/ Launch and Retrieval Locations		2	EA	$_____

28	Post-Repair HD CCTV and LiDAR Defect Mapping Inspection		Lump Sum		$_____
29	Internal Free-Swimming Leak and Air Pocket Detection Inspection		Lump Sum		$_____
30	Erosion and Sediment Control		4100	LF	$_____
31	Rock Excavation and Disposal		1300	CY	$_____
32	Final Cleaning and Flushing		Lump Sum		$_____
33A	Temporary Pavement		6,200	SF	$_____

33B	Permanent Pavement		10,000	SF	$_____
34A	Upland Restoration [Buffer zone and lawn disturbances]		85,000	SF	$_____
34B	Wetland Restoration		4,400	SF	$_____
34C	Riverfront Restoration – Indigenous Shrubs		10	EA	$_____
35	Asphalt Price Adjustment	$20,000 Twenty Thousand Dollars	Allowance		$__20,000_____
36	Portland Cement Price Adjustment	$20,000 Twenty Thousand Dollars	Allowance		$__$20,000_____

37	Gasoline and Diesel Fuel Price Adjustment	$20,000 Twenty Thousand Dollars	Allowance	$_20,000_____

The above unit and lump sum prices shall include all labor, equipment, materials, overhead, profit, insurance, and other costs to cover the finished work of the several kinds called for.

NOTE: The award will be based upon the Proposed Contract Price and will be made in accordance with the provisions of MGL Chapter 30, Section 39M. The quantities designated throughout the Bid Schedule, however, are estimates only, and the Unit Price provided for a category of Work shall be the basis for the entire term of the Contract, for additions to or deletions from the Total Contract Price for Work of the category, so long as the number of units of work remains within fifteen percent (15%) of the estimated quantity or twenty five (25)% of the estimated quantity for items relating to soil management, handling, and/or disposal (Items 1 through 12).

This project is being bid under Chapter 30, Section 39M of the Massachusetts General Laws. The Bidder understands that the Owner reserves the right to reject any or all bids and to waive any informalities in the bidding. The Bidder understands that the Owner shall determine if this bid is responsible and eligible in accordance with M.G.L. c.30, s39M based in part on information contained in the Statement of Bidder's Qualifications submitted as part of this bid form.

The time period for holding bids, where Federal approval is not required is 30 days, Saturdays, Sundays and legal holidays excluded, after the opening of bids and where Federal approval is required, the time period for holding bids is 30 days, Saturdays, Sundays and holidays excluded after Federal approval. Upon receipt of written notice of the acceptance of this bid, Bidder shall execute the formal Contract attached within 10 calendar days and deliver a Performance and Payment Surety Bonds as required in the General Conditions. The Bid Security (5% of Bid) attached in the sum of _____Dollars, ($_____) is to become the property of the Owner in the event the Contract and Bond are not executed within the time above set forth as liquidated damages for the delay and additional expense to the Owner caused thereby.

The undersigned hereby declares that he has carefully examined the site of the proposed Work and fully informed and satisfied himself as to the conditions there existing, the character and requirements of the proposed Work, the difficulties attendant upon its execution and the accuracy of all estimated quantities stated in this BID FORM, and he has carefully read and examined the Drawings, the annexed proposed CONTRACT and the Specifications and other Contract Documents therein referred to and knows and understands the terms and provisions thereof.

The undersigned hereby declares that he understands that information relative to subsurface and other conditions, natural phenomena, existing pipes and other structures (surface and/or subsurface) has been furnished only for his information and convenience without any warranty or guarantee, expressed or implied, that the subsurface and/or other conditions, natural phenomena, existing pipes and other structures (surface and/or subsurface) actually encountered will be the same as those shown on the Drawings or in any of the other Contract Documents and he agrees that he shall not use or be entitled to use any such information made available to him through the Contract Documents or otherwise or obtained by him in his own examination of the site, as a basis of or ground for any claim against the Owner or the Engineer arising from or by reason of any variance which may exist between the aforesaid information made available to or acquired by him and the subsurface and/or other conditions, natural phenomena, existing pipes and other structures (surface and/or subsurface) actually encountered during the construction work, and he has made due allowance therefore in this Bid.

The undersigned hereby declares that he understands that the quantities of work tabulated in this Bid or indicated on the Drawings or in the Specifications or other Contract Documents are only approximate and are subject to increase or decrease as deemed necessary by the Engineer.

The undersigned agrees that, if this Bid is accepted he will contract with the Owner, as provided in the copy of the Contract Documents deposited in the office of the Engineer, this BID FORM being part of said Contract Documents, and that he will perform all the work and furnish all the materials and equipment, and provide all labor, services, plant, machinery, apparatus, appliances, tools, supplies and all other things required by the Contract Documents in the manner and within the time therein prescribed and according to the requirements of the Engineer as therein set forth, and that he will take in full payment therefore the lump sum or unit price applicable to each item of the Work as stated in the schedule below.

The undersigned certifies under penalties of perjury that no officer, agent, or employee of the Owner is directly or indirectly interested in this BID.

The undersigned certifies under penalties of perjury that this bid is in all respects bona fide, fair and made without collusion or fraud with any other person. As used in this paragraph the word "person" shall mean any natural person, joint venture, partnership, corporation or other business or legal entity.

The undersigned hereby certifies that he is able to furnish labor that can work in harmony with all other elements of labor employed or to be employed in the work.

Applicable provisions of Massachusetts General Laws and Regulations and/or the United States Code and Code of Federal Regulations govern this Contract, and any provision violation of the foregoing shall be deemed null, void and of no effect. Where conflict between Code of Federal Regulations and State Laws and Regulations exist, the more stringent requirement shall apply.

Pursuant to M.G.L.c.62C, s49A the undersigned certifies under the penalties of perjury that the Bidder, to the Bidder's best knowledge and belief, has filed all state tax returns and paid all State Taxes required under law.

The undersigned bidder hereby certifies he/she will comply with the specific affirmative action steps contained in the EEO/AA provisions of this Contract, including compliance with the Disadvantaged Business Enterprise provisions as required under these contract provisions. The contractor receiving the award of the contract shall incorporate the EEO/AA provisions of this contract into all subcontracts and purchase orders so that such provisions will be binding upon each subcontractor or vendor.

The undersigned further certifies under penalty of perjury that the said undersigned is not presently debarred from doing public construction work in the Commonwealth under the provisions of Section Twenty-Nine F of Chapter Twenty-Nine, or any other applicable debarment provisions of any other Chapter of the General Laws or any rule or regulation promulgated thereunder; and is not presently debarred, suspended, proposed for debarment, declared ineligible, or voluntarily excluded from covered transactions by any Federal department or agency.

Bidders must fully comply with Subpart C of 2 CFR Part 180 and 2 CFR Part 1532, entitled responsibilities of Participants Regarding transactions (Doing Business with Other Persons). Contractors, subcontractors, or suppliers that appear on the Excluded Parties List System at *www.usgovxml.com/dataservice.aspx?ds=EPLS* are not eligible for award of any contracts funded by the Massachusetts State Revolving Fund. This is project is funded by the Water Infrastructure Finance and Innovation Act (WIFIA), and potential bidder's attention should be drawn to the associated WIFIA requirements contained in the bidding documents.

The undersigned bidder agrees that the undersigned will fully comply with Subpart C of 2 CFR Part 180 and 2 CFR Part1532, entitled Responsibilities of Participants Regarding Transactions (Doing Business with Other Persons). The undersigned shall not award any subcontracts or purchase any materials from suppliers that appear on the Excluded Parties List System. The undersigned shall include this requirement in each subcontract and require it to be included in all subcontracts regardless of tier. The undersigned shall maintain reasonable records to demonstrate compliance with these requirements.

Respectfully submitted,

Date:_____ Name of General Bidder: _____

Federal Employer Identification Number : _____

By (signature) : _____

Title and Name of Person Signing the Bid : _____

Business Address : _____

City, State, and Zip Code : _____

CERTIFICATE OF AUTHORITY

At a duly authorized meeting of the Board of Directors of the _____
(name of corporation)

held on _____ Directors were present or waived notice, it was voted that _____
(date)

_____of this company be and hereby is authorized to execute contracts and bonds
(name and title)

in the name and behalf of said company, and affix its Corporate Seal thereto, and such execution of any contract or bond of obligation in this company's name on its behalf of such _____
(OFFICER)

under seal of the company shall be valid and binding upon this company.

A TRUE COPY,

ATTEST: _____

Place of Business:

_____

_____

I hereby certify that I am the _____ of the _____
(Title) (Name of Corporation)

that _____ is the duly elected _____ of said
(Name of Officer) (Title)

company, and the above vote has not been amended or rescinded and remains in full force and effect as of the date of this contract.

Signature: _____

(Corporate Seal) Name/Title: _____

Date: _____

COMMONWEALTH OF MASSACHUSETTS, SS. _____, 2023

Then personally appeared the above named _____and acknowledged the foregoing instrument to be his/her free act and deed before me.

NOTARY PUBLIC_____

My commission expires:_____

THE BIDDER SHALL STATE THE NAMES OF ALL SUBCONTRACTORS THAT HE/SHE PROPOSES TO USE

PROPOSED SUBCONTRACTORS

If none, write "none" _____.

*Description of Work _____

Proposed Subcontractor
Name _____

Address_____

*Description of Work_____

Proposed Subcontractor
Name _____

Address_____

*Description of Work _____

Proposed Subcontractor
Name _____

Address_____

*Description of Work_____

Proposed Subcontractor
Name _____

Address_____

*Insert description of work and subcontractors' names as may be required.

This is to certify that the names of the above-mentioned subcontractors are submitted with full knowledge and consent of the respective parties. The Bidder warrants that none of the proposed subcontractors have any conflict of interest as respects this Contract.

Bidder_____
(Name)

By _____
(Signature and Title)

THIS PAGE INTENTIONALLY LEFT BLANK

SPRINGFIELD WATER AND SEWER COMMISSION

SPRINGFIELD, MASSACHUSETTS

42-inch PCCP Raw Water Conveyance Pipeline and EDV Facility SWSC

Contract No. 24-01

AGREEMENT

THIS AGREEMENT is dated as of the ____ day of _____ in the year _____ by and between Springfield Water and Sewer Commission acting by and through its Board of Water Commissioners (hereinafter called COMMISSION, SWSC or OWNER), duly authorized therefor, acting herein solely for said Commission and without personal liability to the City/Town, and _____ (hereinafter called CONTRACTOR). COMMISSION AND CONTRACTOR, in consideration of the mutual covenants hereinafter set forth, agree as follows:

ARTICLE 1. WORK

1.1 CONTRACTOR shall perform the Work as specified or indicated in these Contract Documents. The scope of work is summarized in Section "Summary of Work" and described herein these specifications.

ARTICLE 2. OWNER AND ENGINEER

2.1 The Project has been designed by that AECOM Technical Services, Inc., 250 Apollo Drive, Chelmsford, MA who is hereinafter called ENGINEER and who is to act as COMMISSION'S representative, assume all duties and responsibilities, and have the rights and authority assigned to ENGINEER in the Contract Documents in connection with completion of the Work in accordance with the Contract Documents.

ARTICLE 3. CONTRACT TIMES

3.1 The Work will be substantially completed within 548 days from the date of the Notice to Proceed and completed and ready for final payment in accordance with the General Conditions no later than November 6, 2025.

3.2 Project Schedule: Contractor shall submit a work schedule within 7 calendar days of receipt of signed Agreement.

3.3 CONTRACTOR agrees that the Work shall be prosecuted diligently and uninterruptedly and at such rate of progress as will ensure full completion thereof within the Contract Time stated above. It is expressly understood and agreed, by and between CONTRACTOR and OWNER, that the Contract Time is reasonable for the completion of the Work.

3.4 Work hours shall be defined as follows:

3.4.1 Normal work hours: Monday-Friday, 7:00 a.m. to 3:30 p.m.

3.4.2 Extended hours may be established if authorized by SWSC to conduct specialty tasks identified in the work plan. Requests for extended hours must be made at least 72 hours in advance in writing.

3.4.3 No work on Saturdays unless authorized by SWSC in writing.

3.4.4 No work is allowed on Sundays or Commission observed holidays.

ARTICLE 4. CONTRACT PRICE

4.1 COMMISSION shall pay CONTRACTOR for completion of the Work in accordance with the Contract Documents an amount in current funds equal to the prices stipulated in the CONTRACTOR's BID Form attached to this Agreement.

ARTICLE 5. APPLICATION FOR PAYMENT

CONTRACTOR shall submit Applications for Payment in accordance with Article 14 of the General Conditions. Applications for Payment will be reviewed and certified by ENGINEER as provided in the General Conditions.

5.1 CONTRACTOR shall prepare a Schedule of Values (SOV) and submit for ENGINEER and OWNER's review and approval. The SOV shall be broken down into sufficient work tasks that detail the sequence of work. Applications for Payments shall be based on the Approved SOV.

5.2 CONTRACTOR shall submit Applications for Payment in accordance with the approved SOV. Applications for Payment will be reviewed by the Engineer and processed by OWNER as provided in the Conditions of the Contract.

5.3 Retainage shall be held in the amount of 5% until satisfactory substantial completion of the Work. Upon substantial completion the OWNER shall pay the CONTRACTOR the entire balance due on the contract less (1) a retention based on its estimate of the fair value of its claims against the CONTRACTOR and of the cost of completing the incomplete and unsatisfactory items of work and less (2) a retention for direct payments to work and less (2) a retention for direct payments to subcontractors based on demands for same in accordance with the provisions of M.G.L. Chapter 30, Section 39F, or based on the record of payments by the CONTRACTOR to the subcontractors under this Contract if such record of payment indicates that the CONTRACTOR has not paid

subcontractors as provided in Section 39F.

ARTICLE 6. PROGRESS AND FINAL PAYMENTS

6.1 OWNER will make payments on account of the Contract Price on the basis of CONTRACTOR's Applications for Payment. All payments will be on the basis of the progress of the Work measured by the approved SOV and certified by the ENGINEER. No payment can be reviewed or approved without an agreeable SOV.

6.2 OWNER will make progress and final payments after review and acceptance of the received applications for payment, in accordance with the applicable Massachusetts General Law.

6.3 Progress payments will be made for the approved amounts less 5% retainage.

ARTICLE 7. LIQUIDATED DAMAGES

7.1 CONTRACTOR and OWNER recognize that time is of the essence and that Owner will suffer financial and other losses if the Work is not completed within the times specified in Paragraph 3.1 above, plus any extensions thereof allowed in accordance with the Contract. The parties also recognize the delays, expense, and difficulties involved in proving in a legal or arbitration proceeding the actual loss suffered by OWNER if the Work is not completed on time. Accordingly, instead of requiring any such proof, OWNER and CONTRACTOR agree that as liquidated damages for delay (but not as a penalty), Contractor shall pay Owner **Five thousand Two Hundred Seventy-five Dollars and 00/100 $5,275.00** for each day that expires after the time (as duly adjusted pursuant to the Contract) specified in Paragraph 3.1 above for Substantial Completion until the Work is substantially complete.

ARTICLE 8. ASSURANCE

8.1 CONTRACTOR has familiarized himself/herself with the nature and extent of the Contract Documents, Work, locality, and with all local conditions and Federal, State and local laws, ordinances, rules and regulations that in any manner may affect cost, progress or performance of the Work.

8.2 CONTRACTOR has studied carefully all and the physical conditions at the site or otherwise affecting cost, progress or performance of the Work which were relied upon by OWNER in the preparation of the Drawings and Specifications and which have been identified in Article 4 of the Supplementary Conditions.

8.3 CONTRACTOR has made or caused to be made examinations, investigations and tests and studies of such reports and related data in addition to those referred to in the above paragraph as CONTRACTOR deems necessary for the performance of the Work at the Contract Price within the Contract Time and in accordance with the other terms and conditions of the Contract Documents; and no additional examinations, investigations, tests, reports or similar data are or will be required for such purposes.

8.4 CONTRACTOR has correlated the results of all such observations, examinations, investigations, tests, reports and data with the terms and conditions of the Contract Documents.

8.5 CONTRACTOR has given OWNER written notice of any conflict, error or discrepancy that CONTRACTOR has discovered in the Contract Documents and the written resolution thereof by OWNER is acceptable to CONTRACTOR.

8.6 CONTRACTOR agrees that the Contract Documents are sufficient in scope and detail to indicate and convey understanding of all terms and conditions for performance of the Work.

ARTICLE 9. CONTRACT DOCUMENTS

The Contract Documents which comprise the entire agreement between COMMISSION and CONTRACTOR concerning the Work consist of the following:

9.1 Invitation to Bid.

9.2 Instructions to Bidders.

9.3 CONTRACTOR's Bid Submission.

9.4 This Agreement.

9.5 Performance Bond, EJCDC Document C-610, 2002 edition, Performance Bond; EJCDC Document C610, 2007.

9.6 Payment Bond, EJCDC Document C-615, 2002 edition, Payment Bond; EJCDC Document C615, 2007.

9.7 Standard General Conditions of the Construction Contract, EJCDC Document C-700, 2007 edition.

9.8 Certificate(s) of Insurance.

9.9 Supplementary Conditions.

9.9 Technical Specifications (Included in these Contract Documents).

9.10 Contract Documents.

9.11 Addenda numbers _____ to _____, inclusive.

9.12 WIFIA Documentation, Requirements, and Associated Forms.

9.13 Drawings prepared by AECOM Technical Services, Inc.

9.14 All employment requirements specified in these documents.

9.15. Davis Bacon and Massachusetts Wage Rates.

9.16 Any modification, including Change Orders, duly delivered after execution of Agreement.

ARTICLE 10. MISCELLANEOUS

10.1 Terms used in this Agreement which are defined in Article 1 of the General Conditions will have the meanings indicated in the General Conditions.

10.2 Neither OWNER nor CONTRACTOR shall, without the prior written consent of the other, assign or sublet in whole or in part any interest under any of the Contract Documents; and, specifically but without limitation, CONTRACTOR shall not assign any monies due or to become due without the prior written consent of OWNER. In case CONTRACTOR assigns all or any part of any monies due or to become due under this Contract, the instrument of assignment shall contain a clause substantially to the effect that it is agreed that the right of the assignee in and to any monies due or to become due to CONTRACTOR shall be subject to prior claims of all persons, firms and corporations for services rendered or materials supplied for the performance of the Work called for in this Contract.

10.3 COMMISSION and CONTRACTOR each binds itself, its partners, successors, assigns, and legal representatives to all covenants, agreements, and obligations contained in the Contract Documents.

10.4 The Contract Documents constitute the entire agreement between OWNER and CONTRACTOR and may only be altered, amended or repealed by a Modification.

10.5 The Contractor warrants that any products developed hereunder do not infringe upon or violate any patent, copyright, trade secret, or any other propriety right of any third party. In the event of any claim alleging the aforementioned against the Owner, the Owner shall promptly notify Contractor and the Contractor shall

defend such claim, in the Owner's name but at Contractor's expense, and shall indemnify the Owner against any loss, cost, expense or liability arising out of such claim, whether or not such claim is successful.

10.6 The Contractor, its employees and its subcontractors shall keep confidential all propriety information and material to which its employees, or its subcontractors may be exposed in the course of work hereunder, including, but not limited to, proprietary information of third parties.

10.7 The Contractor shall defend, indemnify and hold the Owner harmless from and against any loss, cost, liability or expense (including reasonable counsel fees) arising out of any breach or claimed breach of this provision.

10.8 Contractor agrees that all reports, studies, analysis, specifications, recommendations and all other materials of whatsoever nature, prepared by Contractor for use under this project, or furnished the Contractor by the Owner for use under this project, are to be considered confidential, and that Contractor will neither publish, circulate, nor use any of the foregoing, without first obtaining the written approval of the Owner.

10.9 The Contractor agrees that it will not issue any news releases to the public press or any publications wholly or partly related to its Work under this Agreement without first obtaining the prior written consent of the Owner. The Contractor further agrees that it will not make speeches, engage in public appearances, publish articles or otherwise publicize its Work under this Agreement without prior written approval of the Owner.

10.10 No action shall lie or be maintained against the Owner on any claim based upon this Agreement, or arising out of this Agreement, or out of anything in connection with this Agreement unless such action shall be commenced within four (4) months from completion of the Work hereunder or the earlier termination of this Agreement. Any justifiable dispute arising hereunder shall be brought in a state court located in Hampden County, in the City of Springfield, Massachusetts or federal court of competent jurisdiction located in the City of Springfield. The parties agree that this Contract shall be construed under, and enforced in accordance with the laws of the Commonwealth of Massachusetts, without regard of conflict of law principles.

10.11 The Contractor represents that it, its employees, and its subcontractors possess the professional and technical expertise necessary to perform the Work hereunder.

10.12 The Contractor shall be liable to and hereby agrees to indemnify, defend and hold harmless the Owner and each member, officer, agent, and employee of the

Owner against all claims against any of them for bodily injury or wrongful death or property damage including that which may be sustained by him or caused by any error, omission, negligent act or intentional act of the Contractor or any one employed by the Contractor in the execution or performance of this Agreement.

10.13 All Work to be performed under this Agreement shall be performed with the Contractor's own employees, except that the Contractor may be permitted, as provided herein, to subcontract any area of services to be performed.

10.13.1 None of the services performed hereunder may be subcontracted nor may this Agreement or the rights or obligations hereunder be assigned without the prior written consent of the Owner, such consent shall not be unreasonably withheld.

10.14 No member of the Commission or any officer or employee of the Owner shall be liable personally under or by reason of this Agreement or any of its provisions.

10.15 In the event that any claim is made, action is brought, proceeding is instituted, or hearing is called which is in any way related to the subject matter of this Agreement or to the Work Products produced or findings, methods or conclusions made or utilized by the Contractor as a result thereof, the Contractor shall diligently render to the Owner any and all assistance, including testimony, which the Owner may require of the Contractor. The parties understand and acknowledge that any fee paid hereunder to the Contractor does not include such assistance or testimony, and that in the event that Contractor is required to perform such services it will be reasonable compensated therefore.

10.16 The Contractor covenants that neither it nor any officer of the corporation nor any partner of the partnership, as the case may be, has any interest nor shall it acquire any interest, directly or indirectly, which would conflict in any manner or degree with the performance of the Work hereunder. The Contractor further covenants that, in the performance of this Agreement, no person having such interest shall be employed by it. It is expressly understood that breach of any of the covenants contained herein is a material breach of this Agreement and shall entitle the Owner to recover immediate damages.

10.17 The relationship of the Contractor to the Owner is that of an independent contractor. In accordance with its status as such, the Contractor covenants that it, its employees, and its subcontractors will conduct themselves consistent with such status; will neither hold themselves out as nor claim to be an officer or employee of the Owner by reason hereof; and will not, by reason hereof, make any claim, demand or application to or for any right or privilege applicable to an officer of

employee of the Owner, including, but not limited to, Worker's Compensation coverage, unemployment insurance benefits, Social Security coverage, or retirement membership or credit.

10.18 The Contractor hereby represents that to the best of its knowledge neither it nor any of its personnel has been the subject of any investigation, nor have any of them been convicted or indicted for commission of any crime involving misconduct, corruption, bribery, or fraud in connection with any public contract in the Commonwealth of Massachusetts or any other jurisdiction, except as has been specifically disclosed in writing to the Owner, and that should any such conviction or indictment be obtained or any such investigation commenced prior to the expirations of the term hereof, regardless of the date of the occurrence giving rise to the subject matter of such conviction, indictment or investigation, it will be disclosed in writing to the Owner. Breach of this provision is expressly understood to constitute a material breach of this Agreement.

IN WITNESS WHEREOF, the SPRINGFIELD WATER AND SEWER COMMISSION, acting by and through the Board of Water Commissioners, with the approval of the Executive Director, and **_____, CONTRACTOR** have executed this Agreement. All portions of the Contract Documents have been signed, initialed, or identified by COMMISSION and CONTRACTOR or identified by ENGINEER on their behalf.

This Agreement will be effective on _____, _____, 2024 (which is the Effective Date of the Agreement as a sealed instrument on the day and year the same is signed by all parties hereto, on the date noted).

THE CONTRACTOR:
_____:

Sign: _____

Print: _____

Title: _____

Date Signed: _____

SPRINGFIELD WATER AND SEWER COMMISSION:

Approved:

JOSHUA D. SCHIMMEL, EXECUTIVE DIRECTOR	DATE

Reviewed:

DIRECTOR OF LEGAL AFFAIRS/CPO	DATE

Approved as to Appropriation:

COMPTROLLER	DATE

SPRINGFIELD WATER AND SEWER COMMISSION:

DANIEL RODRIGUEZ, COMMISSIONER	DATE
MATTHEW DONNELLAN, COMMISSIONER	DATE
VANESSA OTERO, CHAIR PERSON	DATE

APPROVED AS TO FORM:

COMMISSION COUNSEL	DATE

ADDRESS FOR GIVING NOTICES:

SPRINGFIELD WATER AND SEWER COMMISSION
250 M STREET EXTENSION
AGAWAM, MA 01001

Note: If CONTRACTOR is a corporation, an affidavit giving the principal the right to sign the Agreement must accompany the executed Agreement.

END OF SECTION

NOTICE OF AWARD

TO: _____

_____

PROJECT DESCRIPTION: _____

_____

The Owner has considered the Proposal submitted by you for the above described Work on _____ 20__ in response to its Advertisement for Bids and Instructions to Bidders.

You are hereby notified that your Proposal has been accepted for Items totalling the amount of $_____.

You are required to provide written verification of receipt of this Notice Of Award within 5 days of the date included below.

You are required by the Instructions to Bidders to execute the Contract Agreement and furnish the required Contractor's Performance Bond, Payment Bond and certificates of insurance within ten (10) days from the date of this Notice of Award.

If you fail to execute said Agreement and to furnish said Bonds and Insurance within ten (10) days from the date of this Notice, said Owner will be entitled to consider all your rights arising out of the Owner's acceptance of your Proposal as abandoned and as a forfeiture of your Bid Bond. The Owner will be entitled to such other rights as may be granted by law.

Dated this _____ day of _____, 20_____.

_____
(Owner)

By _____

Title _____

ACCEPTANCE OF NOTICE

Receipt of the above Notice of Award is hereby acknowledged, this the _____day of _____, 20_____.

By _____

Title _____

NOTICE TO PROCEED

To: _____ Date: _____
(Contractor)

_____ Project: _____

_____ _____

_____ _____

You are hereby notified to commence the Work in accordance with the Agreement dated _____, 20___, on or before _____, 20___, and you are to complete all work within 548 calendar days thereafter. The date of completion of all work is therefore, _____, 20___.

You are required to provide written verification of receipt of this Notice To Proceed within 5 days of the date included below.

_____
(Owner)

By _____

Title _____

ACCEPTANCE OF NOTICE

Receipt of the above Notice to Proceed is hereby acknowledged, this the _____ day of _____, 20___.

By _____

Title _____

THIS PAGE INTENTIONALLY LEFT BLANK

PERFORMANCE BOND

Any singular reference to Contractor, Surety, Owner, or other party shall be considered plural where applicable.

CONTRACTOR (*Name and Address*): SURETY (*Name, and Address of Principal Place of Business*):

OWNER (*Name and Address*):

CONTRACT

Effective Date of Agreement:
Amount:
Description (*Name and Location*):

BOND

Bond Number:
Date (*Not earlier than Effective Date of Agreement*):
Amount:
Modifications to this Bond Form:

Surety and Contractor, intending to be legally bound hereby, subject to the terms set forth below, do each cause this Performance Bond to be duly executed by an authorized officer, agent, or representative.

CONTRACTOR AS PRINCIPAL	**SURETY**
_____ (Seal)	_____ (Seal)
Contractor's Name and Corporate Seal	Surety's Name and Corporate Seal
By: _____	By: _____
Signature	Signature (Attach Power of Attorney)
_____	_____
Print Name	Print Name
_____	_____
Title	Title
Attest: _____	Attest: _____
Signature	Signature
_____	_____
Title	Title

Note: Provide execution by additional parties, such as joint venturers, if necessary.

Contractor and Surety, jointly and severally, bind themselves, their heirs, executors, administrators, successors, and assigns to Owner for the performance of the Contract, which is incorporated herein by reference.

1. If Contractor performs the Contract, Surety and Contractor have no obligation under this Bond, except to participate in conferences as provided in Paragraph 2.1.

2. If there is no Owner Default, Surety's obligation under this Bond shall arise after:
   2.1 Owner has notified Contractor and Surety, at the addresses described in Paragraph 9 below, that Owner is considering declaring a Contractor Default and has requested and attempted to arrange a conference with Contractor and Surety to be held not later than 15 days after receipt of such notice to discuss methods of performing the Contract. If Owner, Contractor, and Surety agree, Contractor shall be allowed a reasonable time to perform the Contract, but such an agreement shall not waive Owner's right, if any, subsequently to declare a Contractor Default; and
   2.2 Owner has declared a Contractor Default and formally terminated Contractor's right to complete the Contract. Such Contractor Default shall not be declared earlier than 20 days after Contractor and Surety have received notice as provided in Paragraph 2.1; and
   2.3 Owner has agreed to pay the Balance of the Contract Price to:
      1. Surety in accordance with the terms of the Contract; or
      2. Another contractor selected pursuant to Paragraph 3.3 to perform the Contract.

3. When Owner has satisfied the conditions of Paragraph 2, Surety shall promptly, and at Surety's expense, take one of the following actions:

   3.1 Arrange for Contractor, with consent of Owner, to perform and complete the Contract; or
   3.2 Undertake to perform and complete the Contract itself, through its agents or through independent contractors; or
   3.3 Obtain bids or negotiated proposals from qualified contractors acceptable to Owner for a contract for performance and completion of the Contract, arrange for a contract to be prepared for execution by Owner and contractor selected with Owner's concurrence, to be secured with performance and payment bonds executed by a qualified surety equivalent to the bonds issued on the Contract, and pay to Owner the amount of damages as described in Paragraph 5 in excess of the Balance of the Contract Price incurred by Owner resulting from Contractor Default; or
   3.4 Waive its right to perform and complete, arrange for completion, or obtain a new contractor, and with reasonable promptness under the circumstances:
      1. After investigation, determine the amount for which it may be liable to Owner and, as soon as practicable after the amount is determined, tender payment therefor to Owner; or
      2. Deny liability in whole or in part and notify Owner citing reasons therefor.

4. If Surety does not proceed as provided in Paragraph 3 with reasonable promptness, Surety shall be deemed to be in default on this Bond 15 days after receipt of an additional written notice from Owner to Surety demanding that Surety perform its obligations under this Bond, and Owner shall be entitled to enforce any remedy available to Owner. If Surety proceeds as provided in Paragraph 3.4, and Owner refuses the payment tendered or Surety has denied liability, in whole or in part, without further notice Owner shall be entitled to enforce any remedy available to Owner.

5. After Owner has terminated Contractor's right to complete the Contract, and if Surety elects to act under Paragraph 3.1, 3.2, or 3.3 above, then the responsibilities of Surety to Owner shall not be greater than those of Contractor under the Contract, and the responsibilities of Owner to Surety shall not be greater than those of Owner under the Contract. To the limit of the amount of this Bond, but subject to commitment by Owner of the Balance of the Contract Price to mitigation of costs and damages on the Contract, Surety is obligated without duplication for:

5.1 The responsibilities of Contractor for correction of defective Work and completion of the Contract;
5.2 Additional legal, design professional, and delay costs resulting from Contractor's Default, and resulting from the actions of or failure to act of Surety under Paragraph 3; and
5.3 Liquidated damages, or if no liquidated damages are specified in the Contract, actual damages caused by delayed performance or non-performance of Contractor.

6. Surety shall not be liable to Owner or others for obligations of Contractor that are unrelated to the Contract, and the Balance of the Contract Price shall not be reduced or set off on account of any such unrelated obligations. No right of action shall accrue on this Bond to any person or entity other than Owner or its heirs, executors, administrators, or successors.

7. Surety hereby waives notice of any change, including changes of time, to Contract or to related subcontracts, purchase orders, and other obligations.

8. Any proceeding, legal or equitable, under this Bond may be instituted in any court of competent jurisdiction in the location in which the Work or part of the Work is located, and shall be instituted within two years after Contractor Default or within two years after Contractor ceased working or within two years after Surety refuses or fails to perform its obligations under this Bond, whichever occurs first. If the provisions of this paragraph are void or prohibited by law, the minimum period of limitation available to sureties as a defense in the jurisdiction of the suit shall be applicable.

9. Notice to Surety, Owner, or Contractor shall be mailed or delivered to the address shown on the signature page.

10. When this Bond has been furnished to comply with a statutory requirement in the location where the Contract was to be performed, any provision in this Bond conflicting with said statutory requirement shall be deemed deleted herefrom and provisions conforming to such statutory requirement shall be deemed incorporated herein. The intent is that this Bond shall be construed as a statutory bond and not as a common law bond.

11. Definitions.

11.1 Balance of the Contract Price: The total amount payable by Owner to Contractor under the Contract after all proper adjustments have been made, including allowance to Contractor of any amounts received or to be received by Owner in settlement of insurance or other Claims for damages to which Contractor is entitled, reduced by all valid and proper payments made to or on behalf of Contractor under the Contract.
11.2 Contract: The agreement between Owner and Contractor identified on the signature page, including all Contract Documents and changes thereto.
11.3 Contractor Default: Failure of Contractor, which has neither been remedied nor waived, to perform or otherwise to comply with the terms of the Contract.
11.4 Owner Default: Failure of Owner, which has neither been remedied nor waived, to pay Contractor as required by the Contract or to perform and complete or otherwise comply with the other terms thereof.

FOR INFORMATION ONLY – (*Name, Address and Telephone*)
Surety Agency or Broker:
Owner's Representative (*Engineer or other party*):

PAYMENT BOND

Any singular reference to Contractor, Surety, Owner, or other party shall be considered plural where applicable.

CONTRACTOR (*Name and Address*):

SURETY (*Name, and Address of Principal Place of Business*):

OWNER (*Name and Address*):

CONTRACT

Effective Date of Agreement:
Amount:
Description *(Name and Location)*:

BOND

Bond Number:
Date (*Not earlier than Effective Date of Agreement*):
Amount:
Modifications to this Bond Form:

Surety and Contractor, intending to be legally bound hereby, subject to the terms set forth below, do each cause this Payment Bond to be duly executed by an authorized officer, agent, or representative.

CONTRACTOR AS PRINCIPAL

_____ (Seal)
Contractor's Name and Corporate Seal

By: _____
Signature

_____
Print Name

_____
Title

Attest: _____
Signature

_____
Title

SURETY

_____ (Seal)
Surety's Name and Corporate Seal

By: _____
Signature (Attach Power of Attorney)

_____
Print Name

_____
Title

Attest: _____
Signature

_____
Title

Note: Provide execution by additional parties, such as joint venturers, if necessary.

1. Contractor and Surety, jointly and severally, bind themselves, their heirs, executors, administrators, successors, and assigns to Owner to pay for labor, materials, and equipment furnished by Claimants for use in the performance of the Contract, which is incorporated herein by reference.

2. With respect to Owner, this obligation shall be null and void if Contractor:

2.1 Promptly makes payment, directly or indirectly, for all sums due Claimants, and

2.2 Defends, indemnifies, and holds harmless Owner from all claims, demands, liens, or suits alleging non-payment by Contractor by any person or entity who furnished labor, materials, or equipment for use in the performance of the Contract, provided Owner has promptly notified Contractor and Surety (at the addresses described in Paragraph 12) of any claims, demands, liens, or suits and tendered defense of such claims, demands, liens, or suits to Contractor and Surety, and provided there is no Owner Default.

3. With respect to Claimants, this obligation shall be null and void if Contractor promptly makes payment, directly or indirectly, for all sums due.

4. Surety shall have no obligation to Claimants under this Bond until:

4.1 Claimants who are employed by or have a direct contract with Contractor have given notice to Surety (at the address described in Paragraph 12) and sent a copy, or notice thereof, to Owner, stating that a claim is being made under this Bond and, with substantial accuracy, the amount of the claim.

4.2 Claimants who do not have a direct contract with Contractor:

1. Have furnished written notice to Contractor and sent a copy, or notice thereof, to Owner, within 90 days after having last performed labor or last furnished materials or equipment included in the claim stating, with substantial accuracy, the amount of the claim and the name of the party to whom the materials or equipment were furnished or supplied, or for whom the labor was done or performed; and
2. Have either received a rejection in whole or in part from Contractor, or not received within 30 days of furnishing the above notice any communication from Contractor by which Contractor had indicated the claim will be paid directly or indirectly; and
3. Not having been paid within the above 30 days, have sent a written notice to Surety (at the address described in Paragraph 12) and sent a copy, or notice thereof, to Owner, stating that a claim is being made under this Bond and enclosing a copy of the previous written notice furnished to Contractor.

5. If a notice by a Claimant required by Paragraph 4 is provided by Owner to Contractor or to Surety, that is sufficient compliance.

6. When a Claimant has satisfied the conditions of Paragraph 4, the Surety shall promptly and at Surety's expense take the following actions:

6.1 Send an answer to that Claimant, with a copy to Owner, within 45 days after receipt of the claim, stating the amounts that are undisputed and the basis for challenging any amounts that are disputed.

6.2 Pay or arrange for payment of any undisputed amounts.

7. Surety's total obligation shall not exceed the amount of this Bond, and the amount of this Bond shall be credited for any payments made in good faith by Surety.

8. Amounts owed by Owner to Contractor under the Contract shall be used for the performance of the Contract and to satisfy claims, if any, under any performance bond. By Contractor furnishing and Owner accepting this Bond, they agree that all funds earned by Contractor in the performance of the Contract are dedicated to satisfy obligations of Contractor and Surety under this Bond, subject to Owner's priority to use

the funds for the completion of the Work.

9. Surety shall not be liable to Owner, Claimants, or others for obligations of Contractor that are unrelated to the Contract. Owner shall not be liable for payment of any costs or expenses of any Claimant under this Bond, and shall have under this Bond no obligations to make payments to, give notices on behalf of, or otherwise have obligations to Claimants under this Bond.

10. Surety hereby waives notice of any change, including changes of time, to the Contract or to related subcontracts, purchase orders, and other obligations.

11. No suit or action shall be commenced by a Claimant under this Bond other than in a court of competent jurisdiction in the location in which the Work or part of the Work is located or after the expiration of one year from the date (1) on which the Claimant gave the notice required by Paragraph 4.1 or Paragraph 4.2.3, or (2) on which the last labor or service was performed by anyone or the last materials or equipment were furnished by anyone under the Contract, whichever of (1) or (2) first occurs. If the provisions of this paragraph are void or prohibited by law, the minimum period of limitation available to sureties as a defense in the jurisdiction of the suit shall be applicable.

12. Notice to Surety, Owner, or Contractor shall be mailed or delivered to the addresses shown on the signature page. Actual receipt of notice by Surety, Owner, or Contractor, however accomplished, shall be sufficient compliance as of the date received at the address shown on the signature page.

13. When this Bond has been furnished to comply with a statutory requirement in the location where the Contract was to be performed, any provision in this Bond conflicting with said statutory requirement shall be deemed deleted herefrom and provisions conforming to such statutory requirement shall be deemed incorporated herein. The intent is that this Bond shall be construed as a statutory Bond and not as a common law bond.

14. Upon request of any person or entity appearing to be a potential beneficiary of this Bond, Contractor shall promptly furnish a copy of this Bond or shall permit a copy to be made.

15. Definitions

15.1 Claimant: An individual or entity having a direct contract with Contractor, or with a first-tier subcontractor of Contractor, to furnish labor, materials, or equipment for use in the performance of the Contract. The intent of this Bond shall be to include without limitation in the terms "labor, materials or equipment" that part of water, gas, power, light, heat, oil, gasoline, telephone service, or rental equipment used in the Contract, architectural and engineering services required for performance of the Work of Contractor and Contractor's subcontractors, and all other items for which a mechanic's lien may be asserted in the jurisdiction where the labor, materials, or equipment were furnished.

15.2 Contract: The agreement between Owner and Contractor identified on the signature page, including all Contract Documents and changes thereto.

15.3 Owner Default: Failure of Owner, which has neither been remedied nor waived, to pay Contractor as required by the Contract, or to perform and complete or otherwise comply with the other terms thereof.

FOR INFORMATION ONLY – (*Name, Address, and Telephone*)
Surety Agency or Broker:
Owner's Representative (*Engineer or other*):

EJCDC
ENGINEERS JOINT CONTRACT DOCUMENTS COMMITTEE

Change Order No. _____

Date of Issuance:	Effective Date:
Owner:	Owner's Contract No.:
Contractor:	Contractor's Project No.:
Engineer:	Engineer's Project No.:
Project:	Contract Name:

The Contract is modified as follows upon execution of this Change Order:

Description:

Attachments: *[List documents supporting change]*

CHANGE IN CONTRACT PRICE	**CHANGE IN CONTRACT TIMES** *[note changes in Milestones if applicable]*
Original Contract Price: $_____	Original Contract Times: Substantial Completion: _____ Ready for Final Payment: _____ days or dates
[Increase] [Decrease] from previously approved Change Orders No. ___ to No. ___: $_____	[Increase] [Decrease] from previously approved Change Orders No. ___ to No. ___: Substantial Completion: _____ Ready for Final Payment: _____ days
Contract Price prior to this Change Order: $_____	Contract Times prior to this Change Order: Substantial Completion: _____ Ready for Final Payment: _____ days or dates
[Increase] [Decrease] of this Change Order: $_____	[Increase] [Decrease] of this Change Order: Substantial Completion: _____ Ready for Final Payment: _____ days or dates
Contract Price incorporating this Change Order: $_____	Contract Times with all approved Change Orders: Substantial Completion: _____ Ready for Final Payment: _____ days or dates

RECOMMENDED:	ACCEPTED:	ACCEPTED:
By: _____	By: _____	By: _____
Engineer (if required)	Owner (Authorized Signature)	Contractor (Authorized Signature)
Title: _____	Title _____	Title _____
Date: _____	Date _____	Date _____

Approved by Funding Agency (if applicable)

By: _____ Date:

Title: _____

This document has important legal consequences; consultation with an attorney is encouraged with respect to its use or modification. This document should be adapted to the particular circumstances of the contemplated Project and the controlling Laws and Regulations.

STANDARD GENERAL CONDITIONS OF THE CONSTRUCTION CONTRACT

Prepared by

ENGINEERS JOINT CONTRACT DOCUMENTS COMMITTEE

and

Issued and Published Jointly by

ACEC
American Council of Engineering Companies

The Associated General Contractors of America
SKILL RESPONSIBILITY INTEGRITY

ASCE American Society of Civil Engineers

PE National Society of Professional Engineers
Professional Engineers in Private Practice

AMERICAN COUNCIL OF ENGINEERING COMPANIES

_____

ASSOCIATED GENERAL CONTRACTORS OF AMERICA

_____

AMERICAN SOCIETY OF CIVIL ENGINEERS

_____

PROFESSIONAL ENGINEERS IN PRIVATE PRACTICE
A Practice Division of the
NATIONAL SOCIETY OF PROFESSIONAL ENGINEERS

Endorsed by

CSI

CONSTRUCTION SPECIFICATIONS INSTITUTE

Copyright © 2007 National Society of Professional Engineers for EJCDC. All rights reserved.

These General Conditions have been prepared for use with the Suggested Forms of Agreement Between Owner and Contractor (EJCDC C-520 or C-525, 2007 Editions). Their provisions are interrelated and a change in one may necessitate a change in the other. Comments concerning their usage are contained in the Narrative Guide to the EJCDC Construction Documents (EJCDC C-001, 2007 Edition). For guidance in the preparation of Supplementary Conditions, see Guide to the Preparation of Supplementary Conditions (EJCDC C-800, 2007 Edition).

Copyright © 2007 National Society of Professional Engineers
1420 King Street, Alexandria, VA 22314-2794
(703) 684-2882
www.nspe.org

American Council of Engineering Companies
1015 15th Street N.W., Washington, DC 20005
(202) 347-7474
www.acec.org

American Society of Civil Engineers
1801 Alexander Bell Drive, Reston, VA 20191-4400
(800) 548-2723
www.asce.org

Associated General Contractors of America
2300 Wilson Boulevard, Suite 400, Arlington, VA 22201-3308
(703) 548-3118
www.agc.org

The copyright for this EJCDC document is owned jointly by the four
EJCDC sponsoring organizations and held in trust for their benefit by NSPE.

Copyright © 2007 National Society of Professional Engineers for EJCDC. All rights reserved.

STANDARD GENERAL CONDITIONS OF THE CONSTRUCTION CONTRACT

TABLE OF CONTENTS

Page

Article 1 – Definitions and Terminology 1
1.01 Defined Terms 1
1.02 Terminology 5

Article 2 – Preliminary Matters 6
2.01 Delivery of Bonds and Evidence of Insurance 6
2.02 Copies of Documents 6
2.03 Commencement of Contract Times; Notice to Proceed 6
2.04 Starting the Work 7
2.05 Before Starting Construction 7
2.06 Preconstruction Conference; Designation of Authorized Representatives 7
2.07 Initial Acceptance of Schedules 7

Article 3 – Contract Documents: Intent, Amending, Reuse 8
3.01 Intent 8
3.02 Reference Standards 8
3.03 Reporting and Resolving Discrepancies 8
3.04 Amending and Supplementing Contract Documents 9
3.05 Reuse of Documents 10
3.06 Electronic Data 10

Article 4 – Availability of Lands; Subsurface and Physical Conditions; Hazardous Environmental Conditions; Reference Points 10
4.01 Availability of Lands 10
4.02 Subsurface and Physical Conditions 11
4.03 Differing Subsurface or Physical Conditions 11
4.04 Underground Facilities 13
4.05 Reference Points 14
4.06 Hazardous Environmental Condition at Site 14

Article 5 – Bonds and Insurance 16
5.01 Performance, Payment, and Other Bonds 16
5.02 Licensed Sureties and Insurers 16
5.03 Certificates of Insurance 16
5.04 Contractor's Insurance 17
5.05 Owner's Liability Insurance 18
5.06 Property Insurance 18
5.07 Waiver of Rights 20
5.08 Receipt and Application of Insurance Proceeds 21
5.09 Acceptance of Bonds and Insurance; Option to Replace 21

Copyright © 2007 National Society of Professional Engineers for EJCDC. All rights reserved.

5.10 Partial Utilization, Acknowledgment of Property Insurer 21

Article 6 – Contractor's Responsibilities 22
6.01 Supervision and Superintendence 22
6.02 Labor; Working Hours 22
6.03 Services, Materials, and Equipment 22
6.04 Progress Schedule 23
6.05 Substitutes and "Or-Equals" 23
6.06 Concerning Subcontractors, Suppliers, and Others 25
6.07 Patent Fees and Royalties 26
6.08 Permits 27
6.09 Laws and Regulations 27
6.10 Taxes 28
6.11 Use of Site and Other Areas 28
6.12 Record Documents 29
6.13 Safety and Protection 29
6.14 Safety Representative 30
6.15 Hazard Communication Programs 30
6.16 Emergencies 30
6.17 Shop Drawings and Samples 30
6.18 Continuing the Work 32
6.19 Contractor's General Warranty and Guarantee 32
6.20 Indemnification 33
6.21 Delegation of Professional Design Services 34

Article 7 – Other Work at the Site 34
7.01 Related Work at Site 34
7.02 Coordination 35
7.03 Legal Relationships 35

Article 8 – Owner's Responsibilities 36
8.01 Communications to Contractor 36
8.02 Replacement of Engineer 36
8.03 Furnish Data 36
8.04 Pay When Due 36
8.05 Lands and Easements; Reports and Tests 36
8.06 Insurance 36
8.07 Change Orders 36
8.08 Inspections, Tests, and Approvals 36
8.09 Limitations on Owner's Responsibilities 36
8.10 Undisclosed Hazardous Environmental Condition 37
8.11 Evidence of Financial Arrangements 37
8.12 Compliance with Safety Program 37

Article 9 – Engineer's Status During Construction 37
9.01 Owner's Representative 37
9.02 Visits to Site 37
9.03 Project Representative 38

Copyright © 2007 National Society of Professional Engineers for EJCDC. All rights reserved.

9.04 Authorized Variations in Work 38
9.05 Rejecting Defective Work 38
9.06 Shop Drawings, Change Orders and Payments 38
9.07 Determinations for Unit Price Work 38
9.08 Decisions on Requirements of Contract Documents and Acceptability of Work 39
9.09 Limitations on Engineer's Authority and Responsibilities 39
9.10 Compliance with Safety Program 40

Article 10 – Changes in the Work; Claims 40
10.01 Authorized Changes in the Work 40
10.02 Unauthorized Changes in the Work 40
10.03 Execution of Change Orders 40
10.04 Notification to Surety 41
10.05 Claims 41

Article 11 – Cost of the Work; Allowances; Unit Price Work 42
11.01 Cost of the Work 42
11.02 Allowances 44
11.03 Unit Price Work 45

Article 12 – Change of Contract Price; Change of Contract Times 45
12.01 Change of Contract Price 45
12.02 Change of Contract Times 47
12.03 Delays 47

Article 13 – Tests and Inspections; Correction, Removal or Acceptance of Defective Work 48
13.01 Notice of Defects 48
13.02 Access to Work 48
13.03 Tests and Inspections 48
13.04 Uncovering Work 49
13.05 Owner May Stop the Work 49
13.06 Correction or Removal of Defective Work 49
13.07 Correction Period 50
13.08 Acceptance of Defective Work 51
13.09 Owner May Correct Defective Work 51

Article 14 – Payments to Contractor and Completion 52
14.01 Schedule of Values 52
14.02 Progress Payments 52
14.03 Contractor's Warranty of Title 54
14.04 Substantial Completion 55
14.05 Partial Utilization 55
14.06 Final Inspection 56
14.07 Final Payment 56
14.08 Final Completion Delayed 57
14.09 Waiver of Claims 58

Copyright © 2007 National Society of Professional Engineers for EJCDC. All rights reserved.

Article 15 – Suspension of Work and Termination 58
15.01 Owner May Suspend Work 58
15.02 Owner May Terminate for Cause 58
15.03 Owner May Terminate For Convenience 59
15.04 Contractor May Stop Work or Terminate 60

Article 16 – Dispute Resolution 60
16.01 Methods and Procedures 60

Article 17 – Miscellaneous 61
17.01 Giving Notice 61
17.02 Computation of Times 61
17.03 Cumulative Remedies 61
17.04 Survival of Obligations 61
17.05 Controlling Law 61
17.06 Headings 61

Copyright © 2007 National Society of Professional Engineers for EJCDC. All rights reserved.

ARTICLE 1 – DEFINITIONS AND TERMINOLOGY

1.01 *Defined Terms*

A. Wherever used in the Bidding Requirements or Contract Documents and printed with initial capital letters, the terms listed below will have the meanings indicated which are applicable to both the singular and plural thereof. In addition to terms specifically defined, terms with initial capital letters in the Contract Documents include references to identified articles and paragraphs, and the titles of other documents or forms.

1. *Addenda*—Written or graphic instruments issued prior to the opening of Bids which clarify, correct, or change the Bidding Requirements or the proposed Contract Documents.

2. *Agreement*—The written instrument which is evidence of the agreement between Owner and Contractor covering the Work.

3. *Application for Payment*—The form acceptable to Engineer which is to be used by Contractor during the course of the Work in requesting progress or final payments and which is to be accompanied by such supporting documentation as is required by the Contract Documents.

4. *Asbestos*—Any material that contains more than one percent asbestos and is friable or is releasing asbestos fibers into the air above current action levels established by the United States Occupational Safety and Health Administration.

5. *Bid*—The offer or proposal of a Bidder submitted on the prescribed form setting forth the prices for the Work to be performed.

6. *Bidder*—The individual or entity who submits a Bid directly to Owner.

7. *Bidding Documents*—The Bidding Requirements and the proposed Contract Documents (including all Addenda).

8. *Bidding Requirements*—The advertisement or invitation to bid, Instructions to Bidders, Bid security of acceptable form, if any, and the Bid Form with any supplements.

9. *Change Order*—A document recommended by Engineer which is signed by Contractor and Owner and authorizes an addition, deletion, or revision in the Work or an adjustment in the Contract Price or the Contract Times, issued on or after the Effective Date of the Agreement.

10. *Claim*—A demand or assertion by Owner or Contractor seeking an adjustment of Contract Price or Contract Times, or both, or other relief with respect to the terms of the Contract. A demand for money or services by a third party is not a Claim.

11. *Contract*—The entire and integrated written agreement between the Owner and Contractor concerning the Work. The Contract supersedes prior negotiations, representations, or agreements, whether written or oral.

Copyright © 2007 National Society of Professional Engineers for EJCDC. All rights reserved.

12. *Contract Documents*—Those items so designated in the Agreement. Only printed or hard copies of the items listed in the Agreement are Contract Documents. Approved Shop Drawings, other Contractor submittals, and the reports and drawings of subsurface and physical conditions are not Contract Documents.

13. *Contract Price*—The moneys payable by Owner to Contractor for completion of the Work in accordance with the Contract Documents as stated in the Agreement (subject to the provisions of Paragraph 11.03 in the case of Unit Price Work).

14. *Contract Times*—The number of days or the dates stated in the Agreement to: (i) achieve Milestones, if any; (ii) achieve Substantial Completion; and (iii) complete the Work so that it is ready for final payment as evidenced by Engineer's written recommendation of final payment.

15. *Contractor*—The individual or entity with whom Owner has entered into the Agreement.

16. *Cost of the Work*—See Paragraph 11.01 for definition.

17. *Drawings*—That part of the Contract Documents prepared or approved by Engineer which graphically shows the scope, extent, and character of the Work to be performed by Contractor. Shop Drawings and other Contractor submittals are not Drawings as so defined.

18. *Effective Date of the Agreement*—The date indicated in the Agreement on which it becomes effective, but if no such date is indicated, it means the date on which the Agreement is signed and delivered by the last of the two parties to sign and deliver.

19. *Engineer*—The individual or entity named as such in the Agreement.

20. *Field Order*—A written order issued by Engineer which requires minor changes in the Work but which does not involve a change in the Contract Price or the Contract Times.

21. *General Requirements*—Sections of Division 1 of the Specifications.

22. *Hazardous Environmental Condition*—The presence at the Site of Asbestos, PCBs, Petroleum, Hazardous Waste, or Radioactive Material in such quantities or circumstances that may present a substantial danger to persons or property exposed thereto.

23. *Hazardous Waste*—The term Hazardous Waste shall have the meaning provided in Section 1004 of the Solid Waste Disposal Act (42 USC Section 6903) as amended from time to time.

24. *Laws and Regulations; Laws or Regulations*—Any and all applicable laws, rules, regulations, ordinances, codes, and orders of any and all governmental bodies, agencies, authorities, and courts having jurisdiction.

25. *Liens*—Charges, security interests, or encumbrances upon Project funds, real property, or personal property.

26. *Milestone*—A principal event specified in the Contract Documents relating to an intermediate completion date or time prior to Substantial Completion of all the Work.

Copyright © 2007 National Society of Professional Engineers for EJCDC. All rights reserved.

27. *Notice of Award*—The written notice by Owner to the Successful Bidder stating that upon timely compliance by the Successful Bidder with the conditions precedent listed therein, Owner will sign and deliver the Agreement.

28. *Notice to Proceed*—A written notice given by Owner to Contractor fixing the date on which the Contract Times will commence to run and on which Contractor shall start to perform the Work under the Contract Documents.

29. *Owner*—The individual or entity with whom Contractor has entered into the Agreement and for whom the Work is to be performed.

30. *PCBs*—Polychlorinated biphenyls.

31. *Petroleum*—Petroleum, including crude oil or any fraction thereof which is liquid at standard conditions of temperature and pressure (60 degrees Fahrenheit and 14.7 pounds per square inch absolute), such as oil, petroleum, fuel oil, oil sludge, oil refuse, gasoline, kerosene, and oil mixed with other non-Hazardous Waste and crude oils.

32. *Progress Schedule*—A schedule, prepared and maintained by Contractor, describing the sequence and duration of the activities comprising the Contractor's plan to accomplish the Work within the Contract Times.

33. *Project*—The total construction of which the Work to be performed under the Contract Documents may be the whole, or a part.

34. *Project Manual*—The bound documentary information prepared for bidding and constructing the Work. A listing of the contents of the Project Manual, which may be bound in one or more volumes, is contained in the table(s) of contents.

35. *Radioactive Material*—Source, special nuclear, or byproduct material as defined by the Atomic Energy Act of 1954 (42 USC Section 2011 et seq.) as amended from time to time.

36. *Resident Project Representative*—The authorized representative of Engineer who may be assigned to the Site or any part thereof.

37. *Samples*—Physical examples of materials, equipment, or workmanship that are representative of some portion of the Work and which establish the standards by which such portion of the Work will be judged.

38. *Schedule of Submittals*—A schedule, prepared and maintained by Contractor, of required submittals and the time requirements to support scheduled performance of related construction activities.

39. *Schedule of Values*—A schedule, prepared and maintained by Contractor, allocating portions of the Contract Price to various portions of the Work and used as the basis for reviewing Contractor's Applications for Payment.

Copyright © 2007 National Society of Professional Engineers for EJCDC. All rights reserved.

40. *Shop Drawings*—All drawings, diagrams, illustrations, schedules, and other data or information which are specifically prepared or assembled by or for Contractor and submitted by Contractor to illustrate some portion of the Work.

41. *Site*—Lands or areas indicated in the Contract Documents as being furnished by Owner upon which the Work is to be performed, including rights-of-way and easements for access thereto, and such other lands furnished by Owner which are designated for the use of Contractor.

42. *Specifications*—That part of the Contract Documents consisting of written requirements for materials, equipment, systems, standards and workmanship as applied to the Work, and certain administrative requirements and procedural matters applicable thereto.

43. *Subcontractor*—An individual or entity having a direct contract with Contractor or with any other Subcontractor for the performance of a part of the Work at the Site.

44. *Substantial Completion*—The time at which the Work (or a specified part thereof) has progressed to the point where, in the opinion of Engineer, the Work (or a specified part thereof) is sufficiently complete, in accordance with the Contract Documents, so that the Work (or a specified part thereof) can be utilized for the purposes for which it is intended. The terms "substantially complete" and "substantially completed" as applied to all or part of the Work refer to Substantial Completion thereof.

45. *Successful Bidder*—The Bidder submitting a responsive Bid to whom Owner makes an award.

46. *Supplementary Conditions*—That part of the Contract Documents which amends or supplements these General Conditions.

47. *Supplier*—A manufacturer, fabricator, supplier, distributor, materialman, or vendor having a direct contract with Contractor or with any Subcontractor to furnish materials or equipment to be incorporated in the Work by Contractor or Subcontractor.

48. *Underground Facilities*—All underground pipelines, conduits, ducts, cables, wires, manholes, vaults, tanks, tunnels, or other such facilities or attachments, and any encasements containing such facilities, including those that convey electricity, gases, steam, liquid petroleum products, telephone or other communications, cable television, water, wastewater, storm water, other liquids or chemicals, or traffic or other control systems.

49. *Unit Price Work*—Work to be paid for on the basis of unit prices.

50. *Work*—The entire construction or the various separately identifiable parts thereof required to be provided under the Contract Documents. Work includes and is the result of performing or providing all labor, services, and documentation necessary to produce such construction, and furnishing, installing, and incorporating all materials and equipment into such construction, all as required by the Contract Documents.

51. *Work Change Directive*—A written statement to Contractor issued on or after the Effective Date of the Agreement and signed by Owner and recommended by Engineer ordering an

Copyright © 2007 National Society of Professional Engineers for EJCDC. All rights reserved.

addition, deletion, or revision in the Work, or responding to differing or unforeseen subsurface or physical conditions under which the Work is to be performed or to emergencies. A Work Change Directive will not change the Contract Price or the Contract Times but is evidence that the parties expect that the change ordered or documented by a Work Change Directive will be incorporated in a subsequently issued Change Order following negotiations by the parties as to its effect, if any, on the Contract Price or Contract Times.

1.02 *Terminology*

A. The words and terms discussed in Paragraph 1.02.B through F are not defined but, when used in the Bidding Requirements or Contract Documents, have the indicated meaning.

B. *Intent of Certain Terms or Adjectives:*

1. The Contract Documents include the terms "as allowed," "as approved," "as ordered," "as directed" or terms of like effect or import to authorize an exercise of professional judgment by Engineer. In addition, the adjectives "reasonable," "suitable," "acceptable," "proper," "satisfactory," or adjectives of like effect or import are used to describe an action or determination of Engineer as to the Work. It is intended that such exercise of professional judgment, action, or determination will be solely to evaluate, in general, the Work for compliance with the information in the Contract Documents and with the design concept of the Project as a functioning whole as shown or indicated in the Contract Documents (unless there is a specific statement indicating otherwise). The use of any such term or adjective is not intended to and shall not be effective to assign to Engineer any duty or authority to supervise or direct the performance of the Work, or any duty or authority to undertake responsibility contrary to the provisions of Paragraph 9.09 or any other provision of the Contract Documents.

C. *Day:*

1. The word "day" means a calendar day of 24 hours measured from midnight to the next midnight.

D. *Defective:*

1. The word "defective," when modifying the word "Work," refers to Work that is unsatisfactory, faulty, or deficient in that it:

a. does not conform to the Contract Documents; or

b. does not meet the requirements of any applicable inspection, reference standard, test, or approval referred to in the Contract Documents; or

c. has been damaged prior to Engineer's recommendation of final payment (unless responsibility for the protection thereof has been assumed by Owner at Substantial Completion in accordance with Paragraph 14.04 or 14.05).

E. *Furnish, Install, Perform, Provide:*

Copyright © 2007 National Society of Professional Engineers for EJCDC. All rights reserved.

1. The word "furnish," when used in connection with services, materials, or equipment, shall mean to supply and deliver said services, materials, or equipment to the Site (or some other specified location) ready for use or installation and in usable or operable condition.

2. The word "install," when used in connection with services, materials, or equipment, shall mean to put into use or place in final position said services, materials, or equipment complete and ready for intended use.

3. The words "perform" or "provide," when used in connection with services, materials, or equipment, shall mean to furnish and install said services, materials, or equipment complete and ready for intended use.

4. When "furnish," "install," "perform," or "provide" is not used in connection with services, materials, or equipment in a context clearly requiring an obligation of Contractor, "provide" is implied.

F. Unless stated otherwise in the Contract Documents, words or phrases that have a well-known technical or construction industry or trade meaning are used in the Contract Documents in accordance with such recognized meaning.

ARTICLE 2 – PRELIMINARY MATTERS

2.01 *Delivery of Bonds and Evidence of Insurance*

A. When Contractor delivers the executed counterparts of the Agreement to Owner, Contractor shall also deliver to Owner such bonds as Contractor may be required to furnish.

B. *Evidence of Insurance:* Before any Work at the Site is started, Contractor and Owner shall each deliver to the other, with copies to each additional insured identified in the Supplementary Conditions, certificates of insurance (and other evidence of insurance which either of them or any additional insured may reasonably request) which Contractor and Owner respectively are required to purchase and maintain in accordance with Article 5.

2.02 *Copies of Documents*

A. Owner shall furnish to Contractor up to ten printed or hard copies of the Drawings and Project Manual. Additional copies will be furnished upon request at the cost of reproduction.

2.03 *Commencement of Contract Times; Notice to Proceed*

A. The Contract Times will commence to run on the thirtieth day after the Effective Date of the Agreement or, if a Notice to Proceed is given, on the day indicated in the Notice to Proceed. A Notice to Proceed may be given at any time within 30 days after the Effective Date of the Agreement. In no event will the Contract Times commence to run later than the sixtieth day after the day of Bid opening or the thirtieth day after the Effective Date of the Agreement, whichever date is earlier.

Copyright © 2007 National Society of Professional Engineers for EJCDC. All rights reserved.

2.04 *Starting the Work*

A. Contractor shall start to perform the Work on the date when the Contract Times commence to run. No Work shall be done at the Site prior to the date on which the Contract Times commence to run.

2.05 *Before Starting Construction*

A. *Preliminary Schedules:* Within 10 days after the Effective Date of the Agreement (unless otherwise specified in the General Requirements), Contractor shall submit to Engineer for timely review:

1. a preliminary Progress Schedule indicating the times (numbers of days or dates) for starting and completing the various stages of the Work, including any Milestones specified in the Contract Documents;

2. a preliminary Schedule of Submittals; and

3. a preliminary Schedule of Values for all of the Work which includes quantities and prices of items which when added together equal the Contract Price and subdivides the Work into component parts in sufficient detail to serve as the basis for progress payments during performance of the Work. Such prices will include an appropriate amount of overhead and profit applicable to each item of Work.

2.06 *Preconstruction Conference; Designation of Authorized Representatives*

A. Before any Work at the Site is started, a conference attended by Owner, Contractor, Engineer, and others as appropriate will be held to establish a working understanding among the parties as to the Work and to discuss the schedules referred to in Paragraph 2.05.A, procedures for handling Shop Drawings and other submittals, processing Applications for Payment, and maintaining required records.

B. At this conference Owner and Contractor each shall designate, in writing, a specific individual to act as its authorized representative with respect to the services and responsibilities under the Contract. Such individuals shall have the authority to transmit instructions, receive information, render decisions relative to the Contract, and otherwise act on behalf of each respective party.

2.07 *Initial Acceptance of Schedules*

A. At least 10 days before submission of the first Application for Payment a conference attended by Contractor, Engineer, and others as appropriate will be held to review for acceptability to Engineer as provided below the schedules submitted in accordance with Paragraph 2.05.A. Contractor shall have an additional 10 days to make corrections and adjustments and to complete and resubmit the schedules. No progress payment shall be made to Contractor until acceptable schedules are submitted to Engineer.

1. The Progress Schedule will be acceptable to Engineer if it provides an orderly progression of the Work to completion within the Contract Times. Such acceptance will not impose on Engineer responsibility for the Progress Schedule, for sequencing, scheduling, or progress of

Copyright © 2007 National Society of Professional Engineers for EJCDC. All rights reserved.

the Work, nor interfere with or relieve Contractor from Contractor's full responsibility therefor.

2. Contractor's Schedule of Submittals will be acceptable to Engineer if it provides a workable arrangement for reviewing and processing the required submittals.

3. Contractor's Schedule of Values will be acceptable to Engineer as to form and substance if it provides a reasonable allocation of the Contract Price to component parts of the Work.

ARTICLE 3 – CONTRACT DOCUMENTS: INTENT, AMENDING, REUSE

3.01 *Intent*

A. The Contract Documents are complementary; what is required by one is as binding as if required by all.

B. It is the intent of the Contract Documents to describe a functionally complete project (or part thereof) to be constructed in accordance with the Contract Documents. Any labor, documentation, services, materials, or equipment that reasonably may be inferred from the Contract Documents or from prevailing custom or trade usage as being required to produce the indicated result will be provided whether or not specifically called for, at no additional cost to Owner.

C. Clarifications and interpretations of the Contract Documents shall be issued by Engineer as provided in Article 9.

3.02 *Reference Standards*

A. Standards, Specifications, Codes, Laws, and Regulations

1. Reference to standards, specifications, manuals, or codes of any technical society, organization, or association, or to Laws or Regulations, whether such reference be specific or by implication, shall mean the standard, specification, manual, code, or Laws or Regulations in effect at the time of opening of Bids (or on the Effective Date of the Agreement if there were no Bids), except as may be otherwise specifically stated in the Contract Documents.

2. No provision of any such standard, specification, manual, or code, or any instruction of a Supplier, shall be effective to change the duties or responsibilities of Owner, Contractor, or Engineer, or any of their subcontractors, consultants, agents, or employees, from those set forth in the Contract Documents. No such provision or instruction shall be effective to assign to Owner, Engineer, or any of their officers, directors, members, partners, employees, agents, consultants, or subcontractors, any duty or authority to supervise or direct the performance of the Work or any duty or authority to undertake responsibility inconsistent with the provisions of the Contract Documents.

3.03 *Reporting and Resolving Discrepancies*

A. *Reporting Discrepancies:*

Copyright © 2007 National Society of Professional Engineers for EJCDC. All rights reserved.

1. *Contractor's Review of Contract Documents Before Starting Work*: Before undertaking each part of the Work, Contractor shall carefully study and compare the Contract Documents and check and verify pertinent figures therein and all applicable field measurements. Contractor shall promptly report in writing to Engineer any conflict, error, ambiguity, or discrepancy which Contractor discovers, or has actual knowledge of, and shall obtain a written interpretation or clarification from Engineer before proceeding with any Work affected thereby.

2. *Contractor's Review of Contract Documents During Performance of Work*: If, during the performance of the Work, Contractor discovers any conflict, error, ambiguity, or discrepancy within the Contract Documents, or between the Contract Documents and (a) any applicable Law or Regulation , (b) any standard, specification, manual, or code, or (c) any instruction of any Supplier, then Contractor shall promptly report it to Engineer in writing. Contractor shall not proceed with the Work affected thereby (except in an emergency as required by Paragraph 6.16.A) until an amendment or supplement to the Contract Documents has been issued by one of the methods indicated in Paragraph 3.04.

3. Contractor shall not be liable to Owner or Engineer for failure to report any conflict, error, ambiguity, or discrepancy in the Contract Documents unless Contractor had actual knowledge thereof.

B. *Resolving Discrepancies:*

1. Except as may be otherwise specifically stated in the Contract Documents, the provisions of the Contract Documents shall take precedence in resolving any conflict, error, ambiguity, or discrepancy between the provisions of the Contract Documents and:

   a. the provisions of any standard, specification, manual, or code, or the instruction of any Supplier (whether or not specifically incorporated by reference in the Contract Documents); or

   b. the provisions of any Laws or Regulations applicable to the performance of the Work (unless such an interpretation of the provisions of the Contract Documents would result in violation of such Law or Regulation).

3.04 *Amending and Supplementing Contract Documents*

A. The Contract Documents may be amended to provide for additions, deletions, and revisions in the Work or to modify the terms and conditions thereof by either a Change Order or a Work Change Directive.

B. The requirements of the Contract Documents may be supplemented, and minor variations and deviations in the Work may be authorized, by one or more of the following ways:

1. A Field Order;

2. Engineer's approval of a Shop Drawing or Sample (subject to the provisions of Paragraph 6.17.D.3); or

Copyright © 2007 National Society of Professional Engineers for EJCDC. All rights reserved.

3. Engineer's written interpretation or clarification.

3.05 *Reuse of Documents*

A. Contractor and any Subcontractor or Supplier shall not:

1. have or acquire any title to or ownership rights in any of the Drawings, Specifications, or other documents (or copies of any thereof) prepared by or bearing the seal of Engineer or its consultants, including electronic media editions; or

2. reuse any such Drawings, Specifications, other documents, or copies thereof on extensions of the Project or any other project without written consent of Owner and Engineer and specific written verification or adaptation by Engineer.

B. The prohibitions of this Paragraph 3.05 will survive final payment, or termination of the Contract. Nothing herein shall preclude Contractor from retaining copies of the Contract Documents for record purposes.

3.06 *Electronic Data*

A. Unless otherwise stated in the Supplementary Conditions, the data furnished by Owner or Engineer to Contractor, or by Contractor to Owner or Engineer, that may be relied upon are limited to the printed copies (also known as hard copies). Files in electronic media format of text, data, graphics, or other types are furnished only for the convenience of the receiving party. Any conclusion or information obtained or derived from such electronic files will be at the user's sole risk. If there is a discrepancy between the electronic files and the hard copies, the hard copies govern.

B. Because data stored in electronic media format can deteriorate or be modified inadvertently or otherwise without authorization of the data's creator, the party receiving electronic files agrees that it will perform acceptance tests or procedures within 60 days, after which the receiving party shall be deemed to have accepted the data thus transferred. Any errors detected within the 60-day acceptance period will be corrected by the transferring party.

C. When transferring documents in electronic media format, the transferring party makes no representations as to long term compatibility, usability, or readability of documents resulting from the use of software application packages, operating systems, or computer hardware differing from those used by the data's creator.

ARTICLE 4 – AVAILABILITY OF LANDS; SUBSURFACE AND PHYSICAL CONDITIONS; HAZARDOUS ENVIRONMENTAL CONDITIONS; REFERENCE POINTS

4.01 *Availability of Lands*

A. Owner shall furnish the Site. Owner shall notify Contractor of any encumbrances or restrictions not of general application but specifically related to use of the Site with which Contractor must comply in performing the Work. Owner will obtain in a timely manner and pay for easements for permanent structures or permanent changes in existing facilities. If Contractor and Owner are unable to agree on entitlement to or on the amount or extent, if any, of any adjustment in the

Copyright © 2007 National Society of Professional Engineers for EJCDC. All rights reserved.

Contract Price or Contract Times, or both, as a result of any delay in Owner's furnishing the Site or a part thereof, Contractor may make a Claim therefor as provided in Paragraph 10.05.

B. Upon reasonable written request, Owner shall furnish Contractor with a current statement of record legal title and legal description of the lands upon which the Work is to be performed and Owner's interest therein as necessary for giving notice of or filing a mechanic's or construction lien against such lands in accordance with applicable Laws and Regulations.

C. Contractor shall provide for all additional lands and access thereto that may be required for temporary construction facilities or storage of materials and equipment.

4.02 *Subsurface and Physical Conditions*

A. *Reports and Drawings:* The Supplementary Conditions identify:

1. those reports known to Owner of explorations and tests of subsurface conditions at or contiguous to the Site; and

2. those drawings known to Owner of physical conditions relating to existing surface or subsurface structures at the Site (except Underground Facilities).

B. *Limited Reliance by Contractor on Technical Data Authorized:* Contractor may rely upon the accuracy of the "technical data" contained in such reports and drawings, but such reports and drawings are not Contract Documents. Such "technical data" is identified in the Supplementary Conditions. Except for such reliance on such "technical data," Contractor may not rely upon or make any claim against Owner or Engineer, or any of their officers, directors, members, partners, employees, agents, consultants, or subcontractors with respect to:

1. the completeness of such reports and drawings for Contractor's purposes, including, but not limited to, any aspects of the means, methods, techniques, sequences, and procedures of construction to be employed by Contractor, and safety precautions and programs incident thereto; or

2. other data, interpretations, opinions, and information contained in such reports or shown or indicated in such drawings; or

3. any Contractor interpretation of or conclusion drawn from any "technical data" or any such other data, interpretations, opinions, or information.

4.03 *Differing Subsurface or Physical Conditions*

A. *Notice:* If Contractor believes that any subsurface or physical condition that is uncovered or revealed either:

1. is of such a nature as to establish that any "technical data" on which Contractor is entitled to rely as provided in Paragraph 4.02 is materially inaccurate; or

2. is of such a nature as to require a change in the Contract Documents; or

3. differs materially from that shown or indicated in the Contract Documents; or

Copyright © 2007 National Society of Professional Engineers for EJCDC. All rights reserved.

4. is of an unusual nature, and differs materially from conditions ordinarily encountered and generally recognized as inherent in work of the character provided for in the Contract Documents;

then Contractor shall, promptly after becoming aware thereof and before further disturbing the subsurface or physical conditions or performing any Work in connection therewith (except in an emergency as required by Paragraph 6.16.A), notify Owner and Engineer in writing about such condition. Contractor shall not further disturb such condition or perform any Work in connection therewith (except as aforesaid) until receipt of written order to do so.

B. *Engineer's Review*: After receipt of written notice as required by Paragraph 4.03.A, Engineer will promptly review the pertinent condition, determine the necessity of Owner's obtaining additional exploration or tests with respect thereto, and advise Owner in writing (with a copy to Contractor) of Engineer's findings and conclusions.

C. *Possible Price and Times Adjustments:*

1. The Contract Price or the Contract Times, or both, will be equitably adjusted to the extent that the existence of such differing subsurface or physical condition causes an increase or decrease in Contractor's cost of, or time required for, performance of the Work; subject, however, to the following:

   a. such condition must meet any one or more of the categories described in Paragraph 4.03.A; and

   b. with respect to Work that is paid for on a unit price basis, any adjustment in Contract Price will be subject to the provisions of Paragraphs 9.07 and 11.03.

2. Contractor shall not be entitled to any adjustment in the Contract Price or Contract Times if:

   a. Contractor knew of the existence of such conditions at the time Contractor made a final commitment to Owner with respect to Contract Price and Contract Times by the submission of a Bid or becoming bound under a negotiated contract; or

   b. the existence of such condition could reasonably have been discovered or revealed as a result of any examination, investigation, exploration, test, or study of the Site and contiguous areas required by the Bidding Requirements or Contract Documents to be conducted by or for Contractor prior to Contractor's making such final commitment; or

   c. Contractor failed to give the written notice as required by Paragraph 4.03.A.

3. If Owner and Contractor are unable to agree on entitlement to or on the amount or extent, if any, of any adjustment in the Contract Price or Contract Times, or both, a Claim may be made therefor as provided in Paragraph 10.05. However, neither Owner or Engineer, or any of their officers, directors, members, partners, employees, agents, consultants, or subcontractors shall be liable to Contractor for any claims, costs, losses, or damages (including but not limited to all fees and charges of engineers, architects, attorneys, and other professionals and all court or arbitration or other dispute resolution costs) sustained by Contractor on or in connection with any other project or anticipated project.

Copyright © 2007 National Society of Professional Engineers for EJCDC. All rights reserved.

4.04 *Underground Facilities*

A. *Shown or Indicated:* The information and data shown or indicated in the Contract Documents with respect to existing Underground Facilities at or contiguous to the Site is based on information and data furnished to Owner or Engineer by the owners of such Underground Facilities, including Owner, or by others. Unless it is otherwise expressly provided in the Supplementary Conditions:

1. Owner and Engineer shall not be responsible for the accuracy or completeness of any such information or data provided by others; and

2. the cost of all of the following will be included in the Contract Price, and Contractor shall have full responsibility for:

   a. reviewing and checking all such information and data;

   b. locating all Underground Facilities shown or indicated in the Contract Documents;

   c. coordination of the Work with the owners of such Underground Facilities, including Owner, during construction; and

   d. the safety and protection of all such Underground Facilities and repairing any damage thereto resulting from the Work.

B. *Not Shown or Indicated:*

1. If an Underground Facility is uncovered or revealed at or contiguous to the Site which was not shown or indicated, or not shown or indicated with reasonable accuracy in the Contract Documents, Contractor shall, promptly after becoming aware thereof and before further disturbing conditions affected thereby or performing any Work in connection therewith (except in an emergency as required by Paragraph 6.16.A), identify the owner of such Underground Facility and give written notice to that owner and to Owner and Engineer. Engineer will promptly review the Underground Facility and determine the extent, if any, to which a change is required in the Contract Documents to reflect and document the consequences of the existence or location of the Underground Facility. During such time, Contractor shall be responsible for the safety and protection of such Underground Facility.

2. If Engineer concludes that a change in the Contract Documents is required, a Work Change Directive or a Change Order will be issued to reflect and document such consequences. An equitable adjustment shall be made in the Contract Price or Contract Times, or both, to the extent that they are attributable to the existence or location of any Underground Facility that was not shown or indicated or not shown or indicated with reasonable accuracy in the Contract Documents and that Contractor did not know of and could not reasonably have been expected to be aware of or to have anticipated. If Owner and Contractor are unable to agree on entitlement to or on the amount or extent, if any, of any such adjustment in Contract Price or Contract Times, Owner or Contractor may make a Claim therefor as provided in Paragraph 10.05.

Copyright © 2007 National Society of Professional Engineers for EJCDC. All rights reserved.

4.05 *Reference Points*

A. Owner shall provide engineering surveys to establish reference points for construction which in Engineer's judgment are necessary to enable Contractor to proceed with the Work. Contractor shall be responsible for laying out the Work, shall protect and preserve the established reference points and property monuments, and shall make no changes or relocations without the prior written approval of Owner. Contractor shall report to Engineer whenever any reference point or property monument is lost or destroyed or requires relocation because of necessary changes in grades or locations, and shall be responsible for the accurate replacement or relocation of such reference points or property monuments by professionally qualified personnel.

4.06 *Hazardous Environmental Condition at Site*

A. *Reports and Drawings:* The Supplementary Conditions identify those reports and drawings known to Owner relating to Hazardous Environmental Conditions that have been identified at the Site.

B. *Limited Reliance by Contractor on Technical Data Authorized:* Contractor may rely upon the accuracy of the "technical data" contained in such reports and drawings, but such reports and drawings are not Contract Documents. Such "technical data" is identified in the Supplementary Conditions. Except for such reliance on such "technical data," Contractor may not rely upon or make any claim against Owner or Engineer, or any of their officers, directors, members, partners, employees, agents, consultants, or subcontractors with respect to:

1. the completeness of such reports and drawings for Contractor's purposes, including, but not limited to, any aspects of the means, methods, techniques, sequences and procedures of construction to be employed by Contractor and safety precautions and programs incident thereto; or

2. other data, interpretations, opinions and information contained in such reports or shown or indicated in such drawings; or

3. any Contractor interpretation of or conclusion drawn from any "technical data" or any such other data, interpretations, opinions or information.

C. Contractor shall not be responsible for any Hazardous Environmental Condition uncovered or revealed at the Site which was not shown or indicated in Drawings or Specifications or identified in the Contract Documents to be within the scope of the Work. Contractor shall be responsible for a Hazardous Environmental Condition created with any materials brought to the Site by Contractor, Subcontractors, Suppliers, or anyone else for whom Contractor is responsible.

D. If Contractor encounters a Hazardous Environmental Condition or if Contractor or anyone for whom Contractor is responsible creates a Hazardous Environmental Condition, Contractor shall immediately: (i) secure or otherwise isolate such condition; (ii) stop all Work in connection with such condition and in any area affected thereby (except in an emergency as required by Paragraph 6.16.A); and (iii) notify Owner and Engineer (and promptly thereafter confirm such notice in writing). Owner shall promptly consult with Engineer concerning the necessity for Owner to retain a qualified expert to evaluate such condition or take corrective action, if any. Promptly after consulting with Engineer, Owner shall take such actions as are necessary to

Copyright © 2007 National Society of Professional Engineers for EJCDC. All rights reserved.

permit Owner to timely obtain required permits and provide Contractor the written notice required by Paragraph 4.06.E.

E. Contractor shall not be required to resume Work in connection with such condition or in any affected area until after Owner has obtained any required permits related thereto and delivered written notice to Contractor: (i) specifying that such condition and any affected area is or has been rendered safe for the resumption of Work; or (ii) specifying any special conditions under which such Work may be resumed safely. If Owner and Contractor cannot agree as to entitlement to or on the amount or extent, if any, of any adjustment in Contract Price or Contract Times, or both, as a result of such Work stoppage or such special conditions under which Work is agreed to be resumed by Contractor, either party may make a Claim therefor as provided in Paragraph 10.05.

F. If after receipt of such written notice Contractor does not agree to resume such Work based on a reasonable belief it is unsafe, or does not agree to resume such Work under such special conditions, then Owner may order the portion of the Work that is in the area affected by such condition to be deleted from the Work. If Owner and Contractor cannot agree as to entitlement to or on the amount or extent, if any, of an adjustment in Contract Price or Contract Times as a result of deleting such portion of the Work, then either party may make a Claim therefor as provided in Paragraph 10.05. Owner may have such deleted portion of the Work performed by Owner's own forces or others in accordance with Article 7.

G. To the fullest extent permitted by Laws and Regulations, Owner shall indemnify and hold harmless Contractor, Subcontractors, and Engineer, and the officers, directors, members, partners, employees, agents, consultants, and subcontractors of each and any of them from and against all claims, costs, losses, and damages (including but not limited to all fees and charges of engineers, architects, attorneys, and other professionals and all court or arbitration or other dispute resolution costs) arising out of or relating to a Hazardous Environmental Condition, provided that such Hazardous Environmental Condition: (i) was not shown or indicated in the Drawings or Specifications or identified in the Contract Documents to be included within the scope of the Work, and (ii) was not created by Contractor or by anyone for whom Contractor is responsible. Nothing in this Paragraph 4.06.G shall obligate Owner to indemnify any individual or entity from and against the consequences of that individual's or entity's own negligence.

H. To the fullest extent permitted by Laws and Regulations, Contractor shall indemnify and hold harmless Owner and Engineer, and the officers, directors, members, partners, employees, agents, consultants, and subcontractors of each and any of them from and against all claims, costs, losses, and damages (including but not limited to all fees and charges of engineers, architects, attorneys, and other professionals and all court or arbitration or other dispute resolution costs) arising out of or relating to a Hazardous Environmental Condition created by Contractor or by anyone for whom Contractor is responsible. Nothing in this Paragraph 4.06.H shall obligate Contractor to indemnify any individual or entity from and against the consequences of that individual's or entity's own negligence.

I. The provisions of Paragraphs 4.02, 4.03, and 4.04 do not apply to a Hazardous Environmental Condition uncovered or revealed at the Site.

Copyright © 2007 National Society of Professional Engineers for EJCDC. All rights reserved.

ARTICLE 5 – BONDS AND INSURANCE

5.01 *Performance, Payment, and Other Bonds*

A. Contractor shall furnish performance and payment bonds, each in an amount at least equal to the Contract Price as security for the faithful performance and payment of all of Contractor's obligations under the Contract Documents. These bonds shall remain in effect until one year after the date when final payment becomes due or until completion of the correction period specified in Paragraph 13.07, whichever is later, except as provided otherwise by Laws or Regulations or by the Contract Documents. Contractor shall also furnish such other bonds as are required by the Contract Documents.

B. All bonds shall be in the form prescribed by the Contract Documents except as provided otherwise by Laws or Regulations, and shall be executed by such sureties as are named in the list of "Companies Holding Certificates of Authority as Acceptable Sureties on Federal Bonds and as Acceptable Reinsuring Companies" as published in Circular 570 (amended) by the Financial Management Service, Surety Bond Branch, U.S. Department of the Treasury. All bonds signed by an agent or attorney-in-fact must be accompanied by a certified copy of that individual's authority to bind the surety. The evidence of authority shall show that it is effective on the date the agent or attorney-in-fact signed each bond.

C. If the surety on any bond furnished by Contractor is declared bankrupt or becomes insolvent or its right to do business is terminated in any state where any part of the Project is located or it ceases to meet the requirements of Paragraph 5.01.B, Contractor shall promptly notify Owner and Engineer and shall, within 20 days after the event giving rise to such notification, provide another bond and surety, both of which shall comply with the requirements of Paragraphs 5.01.B and 5.02.

5.02 *Licensed Sureties and Insurers*

A. All bonds and insurance required by the Contract Documents to be purchased and maintained by Owner or Contractor shall be obtained from surety or insurance companies that are duly licensed or authorized in the jurisdiction in which the Project is located to issue bonds or insurance policies for the limits and coverages so required. Such surety and insurance companies shall also meet such additional requirements and qualifications as may be provided in the Supplementary Conditions.

5.03 *Certificates of Insurance*

A. Contractor shall deliver to Owner, with copies to each additional insured and loss payee identified in the Supplementary Conditions, certificates of insurance (and other evidence of insurance requested by Owner or any other additional insured) which Contractor is required to purchase and maintain.

B. Owner shall deliver to Contractor, with copies to each additional insured and loss payee identified in the Supplementary Conditions, certificates of insurance (and other evidence of insurance requested by Contractor or any other additional insured) which Owner is required to purchase and maintain.

Copyright © 2007 National Society of Professional Engineers for EJCDC. All rights reserved.

C. Failure of Owner to demand such certificates or other evidence of Contractor's full compliance with these insurance requirements or failure of Owner to identify a deficiency in compliance from the evidence provided shall not be construed as a waiver of Contractor's obligation to maintain such insurance.

D. Owner does not represent that insurance coverage and limits established in this Contract necessarily will be adequate to protect Contractor.

E. The insurance and insurance limits required herein shall not be deemed as a limitation on Contractor's liability under the indemnities granted to Owner in the Contract Documents.

5.04 *Contractor's Insurance*

A. Contractor shall purchase and maintain such insurance as is appropriate for the Work being performed and as will provide protection from claims set forth below which may arise out of or result from Contractor's performance of the Work and Contractor's other obligations under the Contract Documents, whether it is to be performed by Contractor, any Subcontractor or Supplier, or by anyone directly or indirectly employed by any of them to perform any of the Work, or by anyone for whose acts any of them may be liable:

1. claims under workers' compensation, disability benefits, and other similar employee benefit acts;

2. claims for damages because of bodily injury, occupational sickness or disease, or death of Contractor's employees;

3. claims for damages because of bodily injury, sickness or disease, or death of any person other than Contractor's employees;

4. claims for damages insured by reasonably available personal injury liability coverage which are sustained:

   a. by any person as a result of an offense directly or indirectly related to the employment of such person by Contractor, or

   b. by any other person for any other reason;

5. claims for damages, other than to the Work itself, because of injury to or destruction of tangible property wherever located, including loss of use resulting therefrom; and

6. claims for damages because of bodily injury or death of any person or property damage arising out of the ownership, maintenance or use of any motor vehicle.

B. The policies of insurance required by this Paragraph 5.04 shall:

1. with respect to insurance required by Paragraphs 5.04.A.3 through 5.04.A.6 inclusive, be written on an occurrence basis, include as additional insureds (subject to any customary exclusion regarding professional liability) Owner and Engineer, and any other individuals or entities identified in the Supplementary Conditions, all of whom shall be listed as additional insureds, and include coverage for the respective officers, directors, members, partners,

Copyright © 2007 National Society of Professional Engineers for EJCDC. All rights reserved.

employees, agents, consultants, and subcontractors of each and any of all such additional insureds, and the insurance afforded to these additional insureds shall provide primary coverage for all claims covered thereby;

2. include at least the specific coverages and be written for not less than the limits of liability provided in the Supplementary Conditions or required by Laws or Regulations, whichever is greater;

3. include contractual liability insurance covering Contractor's indemnity obligations under Paragraphs 6.11 and 6.20;

4. contain a provision or endorsement that the coverage afforded will not be canceled, materially changed or renewal refused until at least 30 days prior written notice has been given to Owner and Contractor and to each other additional insured identified in the Supplementary Conditions to whom a certificate of insurance has been issued (and the certificates of insurance furnished by the Contractor pursuant to Paragraph 5.03 will so provide);

5. remain in effect at least until final payment and at all times thereafter when Contractor may be correcting, removing, or replacing defective Work in accordance with Paragraph 13.07; and

6. include completed operations coverage:

    a. Such insurance shall remain in effect for two years after final payment.

    b. Contractor shall furnish Owner and each other additional insured identified in the Supplementary Conditions, to whom a certificate of insurance has been issued, evidence satisfactory to Owner and any such additional insured of continuation of such insurance at final payment and one year thereafter.

5.05 *Owner's Liability Insurance*

A. In addition to the insurance required to be provided by Contractor under Paragraph 5.04, Owner, at Owner's option, may purchase and maintain at Owner's expense Owner's own liability insurance as will protect Owner against claims which may arise from operations under the Contract Documents.

5.06 *Property Insurance*

A. Unless otherwise provided in the Supplementary Conditions, Owner shall purchase and maintain property insurance upon the Work at the Site in the amount of the full replacement cost thereof (subject to such deductible amounts as may be provided in the Supplementary Conditions or required by Laws and Regulations). This insurance shall:

1. include the interests of Owner, Contractor, Subcontractors, and Engineer, and any other individuals or entities identified in the Supplementary Conditions, and the officers, directors, members, partners, employees, agents, consultants, and subcontractors of each and any of

Copyright © 2007 National Society of Professional Engineers for EJCDC. All rights reserved.

them, each of whom is deemed to have an insurable interest and shall be listed as a loss payee;

2. be written on a Builder's Risk "all-risk" policy form that shall at least include insurance for physical loss or damage to the Work, temporary buildings, falsework, and materials and equipment in transit, and shall insure against at least the following perils or causes of loss: fire, lightning, extended coverage, theft, vandalism and malicious mischief, earthquake, collapse, debris removal, demolition occasioned by enforcement of Laws and Regulations, water damage (other than that caused by flood), and such other perils or causes of loss as may be specifically required by the Supplementary Conditions.

3. include expenses incurred in the repair or replacement of any insured property (including but not limited to fees and charges of engineers and architects);

4. cover materials and equipment stored at the Site or at another location that was agreed to in writing by Owner prior to being incorporated in the Work, provided that such materials and equipment have been included in an Application for Payment recommended by Engineer;

5. allow for partial utilization of the Work by Owner;

6. include testing and startup; and

7. be maintained in effect until final payment is made unless otherwise agreed to in writing by Owner, Contractor, and Engineer with 30 days written notice to each other loss payee to whom a certificate of insurance has been issued.

B. Owner shall purchase and maintain such equipment breakdown insurance or additional property insurance as may be required by the Supplementary Conditions or Laws and Regulations which will include the interests of Owner, Contractor, Subcontractors, and Engineer, and any other individuals or entities identified in the Supplementary Conditions, and the officers, directors, members, partners, employees, agents, consultants and subcontractors of each and any of them, each of whom is deemed to have an insurable interest and shall be listed as a loss payee.

C. All the policies of insurance (and the certificates or other evidence thereof) required to be purchased and maintained in accordance with this Paragraph 5.06 will contain a provision or endorsement that the coverage afforded will not be canceled or materially changed or renewal refused until at least 30 days prior written notice has been given to Owner and Contractor and to each other loss payee to whom a certificate of insurance has been issued and will contain waiver provisions in accordance with Paragraph 5.07.

D. Owner shall not be responsible for purchasing and maintaining any property insurance specified in this Paragraph 5.06 to protect the interests of Contractor, Subcontractors, or others in the Work to the extent of any deductible amounts that are identified in the Supplementary Conditions. The risk of loss within such identified deductible amount will be borne by Contractor, Subcontractors, or others suffering any such loss, and if any of them wishes property insurance coverage within the limits of such amounts, each may purchase and maintain it at the purchaser's own expense.

Copyright © 2007 National Society of Professional Engineers for EJCDC. All rights reserved.

E. If Contractor requests in writing that other special insurance be included in the property insurance policies provided under this Paragraph 5.06, Owner shall, if possible, include such insurance, and the cost thereof will be charged to Contractor by appropriate Change Order. Prior to commencement of the Work at the Site, Owner shall in writing advise Contractor whether or not such other insurance has been procured by Owner.

5.07 *Waiver of Rights*

A. Owner and Contractor intend that all policies purchased in accordance with Paragraph 5.06 will protect Owner, Contractor, Subcontractors, and Engineer, and all other individuals or entities identified in the Supplementary Conditions as loss payees (and the officers, directors, members, partners, employees, agents, consultants, and subcontractors of each and any of them) in such policies and will provide primary coverage for all losses and damages caused by the perils or causes of loss covered thereby. All such policies shall contain provisions to the effect that in the event of payment of any loss or damage the insurers will have no rights of recovery against any of the insureds or loss payees thereunder. Owner and Contractor waive all rights against each other and their respective officers, directors, members, partners, employees, agents, consultants and subcontractors of each and any of them for all losses and damages caused by, arising out of or resulting from any of the perils or causes of loss covered by such policies and any other property insurance applicable to the Work; and, in addition, waive all such rights against Subcontractors and Engineer, and all other individuals or entities identified in the Supplementary Conditions as loss payees (and the officers, directors, members, partners, employees, agents, consultants, and subcontractors of each and any of them) under such policies for losses and damages so caused. None of the above waivers shall extend to the rights that any party making such waiver may have to the proceeds of insurance held by Owner as trustee or otherwise payable under any policy so issued.

B. Owner waives all rights against Contractor, Subcontractors, and Engineer, and the officers, directors, members, partners, employees, agents, consultants and subcontractors of each and any of them for:

1. loss due to business interruption, loss of use, or other consequential loss extending beyond direct physical loss or damage to Owner's property or the Work caused by, arising out of, or resulting from fire or other perils whether or not insured by Owner; and

2. loss or damage to the completed Project or part thereof caused by, arising out of, or resulting from fire or other insured peril or cause of loss covered by any property insurance maintained on the completed Project or part thereof by Owner during partial utilization pursuant to Paragraph 14.05, after Substantial Completion pursuant to Paragraph 14.04, or after final payment pursuant to Paragraph 14.07.

C. Any insurance policy maintained by Owner covering any loss, damage or consequential loss referred to in Paragraph 5.07.B shall contain provisions to the effect that in the event of payment of any such loss, damage, or consequential loss, the insurers will have no rights of recovery against Contractor, Subcontractors, or Engineer, and the officers, directors, members, partners, employees, agents, consultants and subcontractors of each and any of them.

Copyright © 2007 National Society of Professional Engineers for EJCDC. All rights reserved.

5.08 *Receipt and Application of Insurance Proceeds*

A. Any insured loss under the policies of insurance required by Paragraph 5.06 will be adjusted with Owner and made payable to Owner as fiduciary for the loss payees, as their interests may appear, subject to the requirements of any applicable mortgage clause and of Paragraph 5.08.B. Owner shall deposit in a separate account any money so received and shall distribute it in accordance with such agreement as the parties in interest may reach. If no other special agreement is reached, the damaged Work shall be repaired or replaced, the moneys so received applied on account thereof, and the Work and the cost thereof covered by an appropriate Change Order.

B. Owner as fiduciary shall have power to adjust and settle any loss with the insurers unless one of the parties in interest shall object in writing within 15 days after the occurrence of loss to Owner's exercise of this power. If such objection be made, Owner as fiduciary shall make settlement with the insurers in accordance with such agreement as the parties in interest may reach. If no such agreement among the parties in interest is reached, Owner as fiduciary shall adjust and settle the loss with the insurers and, if required in writing by any party in interest, Owner as fiduciary shall give bond for the proper performance of such duties.

5.09 *Acceptance of Bonds and Insurance; Option to Replace*

A. If either Owner or Contractor has any objection to the coverage afforded by or other provisions of the bonds or insurance required to be purchased and maintained by the other party in accordance with Article 5 on the basis of non-conformance with the Contract Documents, the objecting party shall so notify the other party in writing within 10 days after receipt of the certificates (or other evidence requested) required by Paragraph 2.01.B. Owner and Contractor shall each provide to the other such additional information in respect of insurance provided as the other may reasonably request. If either party does not purchase or maintain all of the bonds and insurance required of such party by the Contract Documents, such party shall notify the other party in writing of such failure to purchase prior to the start of the Work, or of such failure to maintain prior to any change in the required coverage. Without prejudice to any other right or remedy, the other party may elect to obtain equivalent bonds or insurance to protect such other party's interests at the expense of the party who was required to provide such coverage, and a Change Order shall be issued to adjust the Contract Price accordingly.

5.10 *Partial Utilization, Acknowledgment of Property Insurer*

A. If Owner finds it necessary to occupy or use a portion or portions of the Work prior to Substantial Completion of all the Work as provided in Paragraph 14.05, no such use or occupancy shall commence before the insurers providing the property insurance pursuant to Paragraph 5.06 have acknowledged notice thereof and in writing effected any changes in coverage necessitated thereby. The insurers providing the property insurance shall consent by endorsement on the policy or policies, but the property insurance shall not be canceled or permitted to lapse on account of any such partial use or occupancy.

Copyright © 2007 National Society of Professional Engineers for EJCDC. All rights reserved.

ARTICLE 6 – CONTRACTOR'S RESPONSIBILITIES

6.01 *Supervision and Superintendence*

A. Contractor shall supervise, inspect, and direct the Work competently and efficiently, devoting such attention thereto and applying such skills and expertise as may be necessary to perform the Work in accordance with the Contract Documents. Contractor shall be solely responsible for the means, methods, techniques, sequences, and procedures of construction. Contractor shall not be responsible for the negligence of Owner or Engineer in the design or specification of a specific means, method, technique, sequence, or procedure of construction which is shown or indicated in and expressly required by the Contract Documents.

B. At all times during the progress of the Work, Contractor shall assign a competent resident superintendent who shall not be replaced without written notice to Owner and Engineer except under extraordinary circumstances.

6.02 *Labor; Working Hours*

A. Contractor shall provide competent, suitably qualified personnel to survey and lay out the Work and perform construction as required by the Contract Documents. Contractor shall at all times maintain good discipline and order at the Site.

B. Except as otherwise required for the safety or protection of persons or the Work or property at the Site or adjacent thereto, and except as otherwise stated in the Contract Documents, all Work at the Site shall be performed during regular working hours. Contractor will not permit the performance of Work on a Saturday, Sunday, or any legal holiday without Owner's written consent (which will not be unreasonably withheld) given after prior written notice to Engineer.

6.03 *Services, Materials, and Equipment*

A. Unless otherwise specified in the Contract Documents, Contractor shall provide and assume full responsibility for all services, materials, equipment, labor, transportation, construction equipment and machinery, tools, appliances, fuel, power, light, heat, telephone, water, sanitary facilities, temporary facilities, and all other facilities and incidentals necessary for the performance, testing, start-up, and completion of the Work.

B. All materials and equipment incorporated into the Work shall be as specified or, if not specified, shall be of good quality and new, except as otherwise provided in the Contract Documents. All special warranties and guarantees required by the Specifications shall expressly run to the benefit of Owner. If required by Engineer, Contractor shall furnish satisfactory evidence (including reports of required tests) as to the source, kind, and quality of materials and equipment.

C. All materials and equipment shall be stored, applied, installed, connected, erected, protected, used, cleaned, and conditioned in accordance with instructions of the applicable Supplier, except as otherwise may be provided in the Contract Documents.

Copyright © 2007 National Society of Professional Engineers for EJCDC. All rights reserved.

6.04 *Progress Schedule*

A. Contractor shall adhere to the Progress Schedule established in accordance with Paragraph 2.07 as it may be adjusted from time to time as provided below.

1. Contractor shall submit to Engineer for acceptance (to the extent indicated in Paragraph 2.07) proposed adjustments in the Progress Schedule that will not result in changing the Contract Times. Such adjustments will comply with any provisions of the General Requirements applicable thereto.

2. Proposed adjustments in the Progress Schedule that will change the Contract Times shall be submitted in accordance with the requirements of Article 12. Adjustments in Contract Times may only be made by a Change Order.

6.05 *Substitutes and "Or-Equals"*

A. Whenever an item of material or equipment is specified or described in the Contract Documents by using the name of a proprietary item or the name of a particular Supplier, the specification or description is intended to establish the type, function, appearance, and quality required. Unless the specification or description contains or is followed by words reading that no like, equivalent, or "or-equal" item or no substitution is permitted, other items of material or equipment or material or equipment of other Suppliers may be submitted to Engineer for review under the circumstances described below.

1. *"Or-Equal" Items:* If in Engineer's sole discretion an item of material or equipment proposed by Contractor is functionally equal to that named and sufficiently similar so that no change in related Work will be required, it may be considered by Engineer as an "or-equal" item, in which case review and approval of the proposed item may, in Engineer's sole discretion, be accomplished without compliance with some or all of the requirements for approval of proposed substitute items. For the purposes of this Paragraph 6.05.A.1, a proposed item of material or equipment will be considered functionally equal to an item so named if:

a. in the exercise of reasonable judgment Engineer determines that:

1) it is at least equal in materials of construction, quality, durability, appearance, strength, and design characteristics;

2) it will reliably perform at least equally well the function and achieve the results imposed by the design concept of the completed Project as a functioning whole; and

3) it has a proven record of performance and availability of responsive service.

b. Contractor certifies that, if approved and incorporated into the Work:

1) there will be no increase in cost to the Owner or increase in Contract Times; and

2) it will conform substantially to the detailed requirements of the item named in the Contract Documents.

Copyright © 2007 National Society of Professional Engineers for EJCDC. All rights reserved.

2. *Substitute Items:*

   a. If in Engineer's sole discretion an item of material or equipment proposed by Contractor does not qualify as an "or-equal" item under Paragraph 6.05.A.1, it will be considered a proposed substitute item.

   b. Contractor shall submit sufficient information as provided below to allow Engineer to determine if the item of material or equipment proposed is essentially equivalent to that named and an acceptable substitute therefor. Requests for review of proposed substitute items of material or equipment will not be accepted by Engineer from anyone other than Contractor.

   c. The requirements for review by Engineer will be as set forth in Paragraph 6.05.A.2.d, as supplemented by the General Requirements, and as Engineer may decide is appropriate under the circumstances.

   d. Contractor shall make written application to Engineer for review of a proposed substitute item of material or equipment that Contractor seeks to furnish or use. The application:

      1) shall certify that the proposed substitute item will:

         a) perform adequately the functions and achieve the results called for by the general design,

         b) be similar in substance to that specified, and

         c) be suited to the same use as that specified;

      2) will state:

         a) the extent, if any, to which the use of the proposed substitute item will prejudice Contractor's achievement of Substantial Completion on time,

         b) whether use of the proposed substitute item in the Work will require a change in any of the Contract Documents (or in the provisions of any other direct contract with Owner for other work on the Project) to adapt the design to the proposed substitute item, and

         c) whether incorporation or use of the proposed substitute item in connection with the Work is subject to payment of any license fee or royalty;

      3) will identify:

         a) all variations of the proposed substitute item from that specified, and

         b) available engineering, sales, maintenance, repair, and replacement services; and

      4) shall contain an itemized estimate of all costs or credits that will result directly or indirectly from use of such substitute item, including costs of redesign and claims of other contractors affected by any resulting change.

Copyright © 2007 National Society of Professional Engineers for EJCDC. All rights reserved.

B. *Substitute Construction Methods or Procedures:* If a specific means, method, technique, sequence, or procedure of construction is expressly required by the Contract Documents, Contractor may furnish or utilize a substitute means, method, technique, sequence, or procedure of construction approved by Engineer. Contractor shall submit sufficient information to allow Engineer, in Engineer's sole discretion, to determine that the substitute proposed is equivalent to that expressly called for by the Contract Documents. The requirements for review by Engineer will be similar to those provided in Paragraph 6.05.A.2.

C. *Engineer's Evaluation:* Engineer will be allowed a reasonable time within which to evaluate each proposal or submittal made pursuant to Paragraphs 6.05.A and 6.05.B. Engineer may require Contractor to furnish additional data about the proposed substitute item. Engineer will be the sole judge of acceptability. No "or equal" or substitute will be ordered, installed or utilized until Engineer's review is complete, which will be evidenced by a Change Order in the case of a substitute and an approved Shop Drawing for an "or equal." Engineer will advise Contractor in writing of any negative determination.

D. *Special Guarantee:* Owner may require Contractor to furnish at Contractor's expense a special performance guarantee or other surety with respect to any substitute.

E. *Engineer's Cost Reimbursement*: Engineer will record Engineer's costs in evaluating a substitute proposed or submitted by Contractor pursuant to Paragraphs 6.05.A.2 and 6.05.B. Whether or not Engineer approves a substitute so proposed or submitted by Contractor, Contractor shall reimburse Owner for the reasonable charges of Engineer for evaluating each such proposed substitute. Contractor shall also reimburse Owner for the reasonable charges of Engineer for making changes in the Contract Documents (or in the provisions of any other direct contract with Owner) resulting from the acceptance of each proposed substitute.

F. *Contractor's Expense*: Contractor shall provide all data in support of any proposed substitute or "or-equal" at Contractor's expense.

6.06 *Concerning Subcontractors, Suppliers, and Others*

A. Contractor shall not employ any Subcontractor, Supplier, or other individual or entity (including those acceptable to Owner as indicated in Paragraph 6.06.B), whether initially or as a replacement, against whom Owner may have reasonable objection. Contractor shall not be required to employ any Subcontractor, Supplier, or other individual or entity to furnish or perform any of the Work against whom Contractor has reasonable objection.

B. If the Supplementary Conditions require the identity of certain Subcontractors, Suppliers, or other individuals or entities to be submitted to Owner in advance for acceptance by Owner by a specified date prior to the Effective Date of the Agreement, and if Contractor has submitted a list thereof in accordance with the Supplementary Conditions, Owner's acceptance (either in writing or by failing to make written objection thereto by the date indicated for acceptance or objection in the Bidding Documents or the Contract Documents) of any such Subcontractor, Supplier, or other individual or entity so identified may be revoked on the basis of reasonable objection after due investigation. Contractor shall submit an acceptable replacement for the rejected Subcontractor, Supplier, or other individual or entity, and the Contract Price will be adjusted by the difference in the cost occasioned by such replacement, and an appropriate Change Order will be issued. No acceptance by Owner of any such Subcontractor, Supplier, or other individual or

Copyright © 2007 National Society of Professional Engineers for EJCDC. All rights reserved.

entity, whether initially or as a replacement, shall constitute a waiver of any right of Owner or Engineer to reject defective Work.

C. Contractor shall be fully responsible to Owner and Engineer for all acts and omissions of the Subcontractors, Suppliers, and other individuals or entities performing or furnishing any of the Work just as Contractor is responsible for Contractor's own acts and omissions. Nothing in the Contract Documents:

1. shall create for the benefit of any such Subcontractor, Supplier, or other individual or entity any contractual relationship between Owner or Engineer and any such Subcontractor, Supplier or other individual or entity; nor

2. shall create any obligation on the part of Owner or Engineer to pay or to see to the payment of any moneys due any such Subcontractor, Supplier, or other individual or entity except as may otherwise be required by Laws and Regulations.

D. Contractor shall be solely responsible for scheduling and coordinating the Work of Subcontractors, Suppliers, and other individuals or entities performing or furnishing any of the Work under a direct or indirect contract with Contractor.

E. Contractor shall require all Subcontractors, Suppliers, and such other individuals or entities performing or furnishing any of the Work to communicate with Engineer through Contractor.

F. The divisions and sections of the Specifications and the identifications of any Drawings shall not control Contractor in dividing the Work among Subcontractors or Suppliers or delineating the Work to be performed by any specific trade.

G. All Work performed for Contractor by a Subcontractor or Supplier will be pursuant to an appropriate agreement between Contractor and the Subcontractor or Supplier which specifically binds the Subcontractor or Supplier to the applicable terms and conditions of the Contract Documents for the benefit of Owner and Engineer. Whenever any such agreement is with a Subcontractor or Supplier who is listed as a loss payee on the property insurance provided in Paragraph 5.06, the agreement between the Contractor and the Subcontractor or Supplier will contain provisions whereby the Subcontractor or Supplier waives all rights against Owner, Contractor, Engineer, and all other individuals or entities identified in the Supplementary Conditions to be listed as insureds or loss payees (and the officers, directors, members, partners, employees, agents, consultants, and subcontractors of each and any of them) for all losses and damages caused by, arising out of, relating to, or resulting from any of the perils or causes of loss covered by such policies and any other property insurance applicable to the Work. If the insurers on any such policies require separate waiver forms to be signed by any Subcontractor or Supplier, Contractor will obtain the same.

6.07 *Patent Fees and Royalties*

A. Contractor shall pay all license fees and royalties and assume all costs incident to the use in the performance of the Work or the incorporation in the Work of any invention, design, process, product, or device which is the subject of patent rights or copyrights held by others. If a particular invention, design, process, product, or device is specified in the Contract Documents for use in the performance of the Work and if, to the actual knowledge of Owner or Engineer, its

Copyright © 2007 National Society of Professional Engineers for EJCDC. All rights reserved.

use is subject to patent rights or copyrights calling for the payment of any license fee or royalty to others, the existence of such rights shall be disclosed by Owner in the Contract Documents.

B. To the fullest extent permitted by Laws and Regulations, Owner shall indemnify and hold harmless Contractor, and its officers, directors, members, partners, employees, agents, consultants, and subcontractors from and against all claims, costs, losses, and damages (including but not limited to all fees and charges of engineers, architects, attorneys, and other professionals, and all court or arbitration or other dispute resolution costs) arising out of or relating to any infringement of patent rights or copyrights incident to the use in the performance of the Work or resulting from the incorporation in the Work of any invention, design, process, product, or device specified in the Contract Documents, but not identified as being subject to payment of any license fee or royalty to others required by patent rights or copyrights.

C. To the fullest extent permitted by Laws and Regulations, Contractor shall indemnify and hold harmless Owner and Engineer, and the officers, directors, members, partners, employees, agents, consultants and subcontractors of each and any of them from and against all claims, costs, losses, and damages (including but not limited to all fees and charges of engineers, architects, attorneys, and other professionals and all court or arbitration or other dispute resolution costs) arising out of or relating to any infringement of patent rights or copyrights incident to the use in the performance of the Work or resulting from the incorporation in the Work of any invention, design, process, product, or device not specified in the Contract Documents.

6.08 *Permits*

A. Unless otherwise provided in the Supplementary Conditions, Contractor shall obtain and pay for all construction permits and licenses. Owner shall assist Contractor, when necessary, in obtaining such permits and licenses. Contractor shall pay all governmental charges and inspection fees necessary for the prosecution of the Work which are applicable at the time of opening of Bids, or, if there are no Bids, on the Effective Date of the Agreement. Owner shall pay all charges of utility owners for connections for providing permanent service to the Work.

6.09 *Laws and Regulations*

A. Contractor shall give all notices required by and shall comply with all Laws and Regulations applicable to the performance of the Work. Except where otherwise expressly required by applicable Laws and Regulations, neither Owner nor Engineer shall be responsible for monitoring Contractor's compliance with any Laws or Regulations.

B. If Contractor performs any Work knowing or having reason to know that it is contrary to Laws or Regulations, Contractor shall bear all claims, costs, losses, and damages (including but not limited to all fees and charges of engineers, architects, attorneys, and other professionals and all court or arbitration or other dispute resolution costs) arising out of or relating to such Work. However, it shall not be Contractor's responsibility to make certain that the Specifications and Drawings are in accordance with Laws and Regulations, but this shall not relieve Contractor of Contractor's obligations under Paragraph 3.03.

C. Changes in Laws or Regulations not known at the time of opening of Bids (or, on the Effective Date of the Agreement if there were no Bids) having an effect on the cost or time of performance of the Work shall be the subject of an adjustment in Contract Price or Contract Times. If Owner

Copyright © 2007 National Society of Professional Engineers for EJCDC. All rights reserved.

and Contractor are unable to agree on entitlement to or on the amount or extent, if any, of any such adjustment, a Claim may be made therefor as provided in Paragraph 10.05.

6.10 *Taxes*

A. Contractor shall pay all sales, consumer, use, and other similar taxes required to be paid by Contractor in accordance with the Laws and Regulations of the place of the Project which are applicable during the performance of the Work.

6.11 *Use of Site and Other Areas*

A. *Limitation on Use of Site and Other Areas:*

1. Contractor shall confine construction equipment, the storage of materials and equipment, and the operations of workers to the Site and other areas permitted by Laws and Regulations, and shall not unreasonably encumber the Site and other areas with construction equipment or other materials or equipment. Contractor shall assume full responsibility for any damage to any such land or area, or to the owner or occupant thereof, or of any adjacent land or areas resulting from the performance of the Work.

2. Should any claim be made by any such owner or occupant because of the performance of the Work, Contractor shall promptly settle with such other party by negotiation or otherwise resolve the claim by arbitration or other dispute resolution proceeding or at law.

3. To the fullest extent permitted by Laws and Regulations, Contractor shall indemnify and hold harmless Owner and Engineer, and the officers, directors, members, partners, employees, agents, consultants and subcontractors of each and any of them from and against all claims, costs, losses, and damages (including but not limited to all fees and charges of engineers, architects, attorneys, and other professionals and all court or arbitration or other dispute resolution costs) arising out of or relating to any claim or action, legal or equitable, brought by any such owner or occupant against Owner, Engineer, or any other party indemnified hereunder to the extent caused by or based upon Contractor's performance of the Work.

B. *Removal of Debris During Performance of the Work:* During the progress of the Work Contractor shall keep the Site and other areas free from accumulations of waste materials, rubbish, and other debris. Removal and disposal of such waste materials, rubbish, and other debris shall conform to applicable Laws and Regulations.

C. *Cleaning:* Prior to Substantial Completion of the Work Contractor shall clean the Site and the Work and make it ready for utilization by Owner. At the completion of the Work Contractor shall remove from the Site all tools, appliances, construction equipment and machinery, and surplus materials and shall restore to original condition all property not designated for alteration by the Contract Documents.

D. *Loading Structures:* Contractor shall not load nor permit any part of any structure to be loaded in any manner that will endanger the structure, nor shall Contractor subject any part of the Work or adjacent property to stresses or pressures that will endanger it.

Copyright © 2007 National Society of Professional Engineers for EJCDC. All rights reserved.

6.12 *Record Documents*

A. Contractor shall maintain in a safe place at the Site one record copy of all Drawings, Specifications, Addenda, Change Orders, Work Change Directives, Field Orders, and written interpretations and clarifications in good order and annotated to show changes made during construction. These record documents together with all approved Samples and a counterpart of all approved Shop Drawings will be available to Engineer for reference. Upon completion of the Work, these record documents, Samples, and Shop Drawings will be delivered to Engineer for Owner.

6.13 *Safety and Protection*

A. Contractor shall be solely responsible for initiating, maintaining and supervising all safety precautions and programs in connection with the Work. Such responsibility does not relieve Subcontractors of their responsibility for the safety of persons or property in the performance of their work, nor for compliance with applicable safety Laws and Regulations. Contractor shall take all necessary precautions for the safety of, and shall provide the necessary protection to prevent damage, injury or loss to:

1. all persons on the Site or who may be affected by the Work;

2. all the Work and materials and equipment to be incorporated therein, whether in storage on or off the Site; and

3. other property at the Site or adjacent thereto, including trees, shrubs, lawns, walks, pavements, roadways, structures, utilities, and Underground Facilities not designated for removal, relocation, or replacement in the course of construction.

B. Contractor shall comply with all applicable Laws and Regulations relating to the safety of persons or property, or to the protection of persons or property from damage, injury, or loss; and shall erect and maintain all necessary safeguards for such safety and protection. Contractor shall notify owners of adjacent property and of Underground Facilities and other utility owners when prosecution of the Work may affect them, and shall cooperate with them in the protection, removal, relocation, and replacement of their property.

C. Contractor shall comply with the applicable requirements of Owner's safety programs, if any. The Supplementary Conditions identify any Owner's safety programs that are applicable to the Work.

D. Contractor shall inform Owner and Engineer of the specific requirements of Contractor's safety program with which Owner's and Engineer's employees and representatives must comply while at the Site.

E. All damage, injury, or loss to any property referred to in Paragraph 6.13.A.2 or 6.13.A.3 caused, directly or indirectly, in whole or in part, by Contractor, any Subcontractor, Supplier, or any other individual or entity directly or indirectly employed by any of them to perform any of the Work, or anyone for whose acts any of them may be liable, shall be remedied by Contractor (except damage or loss attributable to the fault of Drawings or Specifications or to the acts or omissions of Owner or Engineer or anyone employed by any of them, or anyone for whose acts

Copyright © 2007 National Society of Professional Engineers for EJCDC. All rights reserved.

any of them may be liable, and not attributable, directly or indirectly, in whole or in part, to the fault or negligence of Contractor or any Subcontractor, Supplier, or other individual or entity directly or indirectly employed by any of them).

F. Contractor's duties and responsibilities for safety and for protection of the Work shall continue until such time as all the Work is completed and Engineer has issued a notice to Owner and Contractor in accordance with Paragraph 14.07.B that the Work is acceptable (except as otherwise expressly provided in connection with Substantial Completion).

6.14 *Safety Representative*

A. Contractor shall designate a qualified and experienced safety representative at the Site whose duties and responsibilities shall be the prevention of accidents and the maintaining and supervising of safety precautions and programs.

6.15 *Hazard Communication Programs*

A. Contractor shall be responsible for coordinating any exchange of material safety data sheets or other hazard communication information required to be made available to or exchanged between or among employers at the Site in accordance with Laws or Regulations.

6.16 *Emergencies*

A. In emergencies affecting the safety or protection of persons or the Work or property at the Site or adjacent thereto, Contractor is obligated to act to prevent threatened damage, injury, or loss. Contractor shall give Engineer prompt written notice if Contractor believes that any significant changes in the Work or variations from the Contract Documents have been caused thereby or are required as a result thereof. If Engineer determines that a change in the Contract Documents is required because of the action taken by Contractor in response to such an emergency, a Work Change Directive or Change Order will be issued.

6.17 *Shop Drawings and Samples*

A. Contractor shall submit Shop Drawings and Samples to Engineer for review and approval in accordance with the accepted Schedule of Submittals (as required by Paragraph 2.07). Each submittal will be identified as Engineer may require.

1. *Shop Drawings:*

a. Submit number of copies specified in the General Requirements.

b. Data shown on the Shop Drawings will be complete with respect to quantities, dimensions, specified performance and design criteria, materials, and similar data to show Engineer the services, materials, and equipment Contractor proposes to provide and to enable Engineer to review the information for the limited purposes required by Paragraph 6.17.D.

2. *Samples:*

a. Submit number of Samples specified in the Specifications.

Copyright © 2007 National Society of Professional Engineers for EJCDC. All rights reserved.

b. Clearly identify each Sample as to material, Supplier, pertinent data such as catalog numbers, the use for which intended and other data as Engineer may require to enable Engineer to review the submittal for the limited purposes required by Paragraph 6.17.D.

B. Where a Shop Drawing or Sample is required by the Contract Documents or the Schedule of Submittals, any related Work performed prior to Engineer's review and approval of the pertinent submittal will be at the sole expense and responsibility of Contractor.

C. *Submittal Procedures:*

1. Before submitting each Shop Drawing or Sample, Contractor shall have:

a. reviewed and coordinated each Shop Drawing or Sample with other Shop Drawings and Samples and with the requirements of the Work and the Contract Documents;

b. determined and verified all field measurements, quantities, dimensions, specified performance and design criteria, installation requirements, materials, catalog numbers, and similar information with respect thereto;

c. determined and verified the suitability of all materials offered with respect to the indicated application, fabrication, shipping, handling, storage, assembly, and installation pertaining to the performance of the Work; and

d. determined and verified all information relative to Contractor's responsibilities for means, methods, techniques, sequences, and procedures of construction, and safety precautions and programs incident thereto.

2. Each submittal shall bear a stamp or specific written certification that Contractor has satisfied Contractor's obligations under the Contract Documents with respect to Contractor's review and approval of that submittal.

3. With each submittal, Contractor shall give Engineer specific written notice of any variations that the Shop Drawing or Sample may have from the requirements of the Contract Documents. This notice shall be both a written communication separate from the Shop Drawings or Sample submittal; and, in addition, by a specific notation made on each Shop Drawing or Sample submitted to Engineer for review and approval of each such variation.

D. *Engineer's Review:*

1. Engineer will provide timely review of Shop Drawings and Samples in accordance with the Schedule of Submittals acceptable to Engineer. Engineer's review and approval will be only to determine if the items covered by the submittals will, after installation or incorporation in the Work, conform to the information given in the Contract Documents and be compatible with the design concept of the completed Project as a functioning whole as indicated by the Contract Documents.

2. Engineer's review and approval will not extend to means, methods, techniques, sequences, or procedures of construction (except where a particular means, method, technique, sequence, or procedure of construction is specifically and expressly called for by the

Copyright © 2007 National Society of Professional Engineers for EJCDC. All rights reserved.

Contract Documents) or to safety precautions or programs incident thereto. The review and approval of a separate item as such will not indicate approval of the assembly in which the item functions.

3. Engineer's review and approval shall not relieve Contractor from responsibility for any variation from the requirements of the Contract Documents unless Contractor has complied with the requirements of Paragraph 6.17.C.3 and Engineer has given written approval of each such variation by specific written notation thereof incorporated in or accompanying the Shop Drawing or Sample. Engineer's review and approval shall not relieve Contractor from responsibility for complying with the requirements of Paragraph 6.17.C.1.

E. *Resubmittal Procedures:*

1. Contractor shall make corrections required by Engineer and shall return the required number of corrected copies of Shop Drawings and submit, as required, new Samples for review and approval. Contractor shall direct specific attention in writing to revisions other than the corrections called for by Engineer on previous submittals.

6.18 *Continuing the Work*

A. Contractor shall carry on the Work and adhere to the Progress Schedule during all disputes or disagreements with Owner. No Work shall be delayed or postponed pending resolution of any disputes or disagreements, except as permitted by Paragraph 15.04 or as Owner and Contractor may otherwise agree in writing.

6.19 *Contractor's General Warranty and Guarantee*

A. Contractor warrants and guarantees to Owner that all Work will be in accordance with the Contract Documents and will not be defective. Engineer and its officers, directors, members, partners, employees, agents, consultants, and subcontractors shall be entitled to rely on representation of Contractor's warranty and guarantee.

B. Contractor's warranty and guarantee hereunder excludes defects or damage caused by:

1. abuse, modification, or improper maintenance or operation by persons other than Contractor, Subcontractors, Suppliers, or any other individual or entity for whom Contractor is responsible; or

2. normal wear and tear under normal usage.

C. Contractor's obligation to perform and complete the Work in accordance with the Contract Documents shall be absolute. None of the following will constitute an acceptance of Work that is not in accordance with the Contract Documents or a release of Contractor's obligation to perform the Work in accordance with the Contract Documents:

1. observations by Engineer;

2. recommendation by Engineer or payment by Owner of any progress or final payment;

Copyright © 2007 National Society of Professional Engineers for EJCDC. All rights reserved.

3. the issuance of a certificate of Substantial Completion by Engineer or any payment related thereto by Owner;

4. use or occupancy of the Work or any part thereof by Owner;

5. any review and approval of a Shop Drawing or Sample submittal or the issuance of a notice of acceptability by Engineer;

6. any inspection, test, or approval by others; or

7. any correction of defective Work by Owner.

6.20 *Indemnification*

A. To the fullest extent permitted by Laws and Regulations, Contractor shall indemnify and hold harmless Owner and Engineer, and the officers, directors, members, partners, employees, agents, consultants and subcontractors of each and any of them from and against all claims, costs, losses, and damages (including but not limited to all fees and charges of engineers, architects, attorneys, and other professionals and all court or arbitration or other dispute resolution costs) arising out of or relating to the performance of the Work, provided that any such claim, cost, loss, or damage is attributable to bodily injury, sickness, disease, or death, or to injury to or destruction of tangible property (other than the Work itself), including the loss of use resulting therefrom but only to the extent caused by any negligent act or omission of Contractor, any Subcontractor, any Supplier, or any individual or entity directly or indirectly employed by any of them to perform any of the Work or anyone for whose acts any of them may be liable .

B. In any and all claims against Owner or Engineer or any of their officers, directors, members, partners, employees, agents, consultants, or subcontractors by any employee (or the survivor or personal representative of such employee) of Contractor, any Subcontractor, any Supplier, or any individual or entity directly or indirectly employed by any of them to perform any of the Work, or anyone for whose acts any of them may be liable, the indemnification obligation under Paragraph 6.20.A shall not be limited in any way by any limitation on the amount or type of damages, compensation, or benefits payable by or for Contractor or any such Subcontractor, Supplier, or other individual or entity under workers' compensation acts, disability benefit acts, or other employee benefit acts.

C. The indemnification obligations of Contractor under Paragraph 6.20.A shall not extend to the liability of Engineer and Engineer's officers, directors, members, partners, employees, agents, consultants and subcontractors arising out of:

1. the preparation or approval of, or the failure to prepare or approve maps, Drawings, opinions, reports, surveys, Change Orders, designs, or Specifications; or

2. giving directions or instructions, or failing to give them, if that is the primary cause of the injury or damage.

Copyright © 2007 National Society of Professional Engineers for EJCDC. All rights reserved.

6.21 *Delegation of Professional Design Services*

A. Contractor will not be required to provide professional design services unless such services are specifically required by the Contract Documents for a portion of the Work or unless such services are required to carry out Contractor's responsibilities for construction means, methods, techniques, sequences and procedures. Contractor shall not be required to provide professional services in violation of applicable law.

B. If professional design services or certifications by a design professional related to systems, materials or equipment are specifically required of Contractor by the Contract Documents, Owner and Engineer will specify all performance and design criteria that such services must satisfy. Contractor shall cause such services or certifications to be provided by a properly licensed professional, whose signature and seal shall appear on all drawings, calculations, specifications, certifications, Shop Drawings and other submittals prepared by such professional. Shop Drawings and other submittals related to the Work designed or certified by such professional, if prepared by others, shall bear such professional's written approval when submitted to Engineer.

C. Owner and Engineer shall be entitled to rely upon the adequacy, accuracy and completeness of the services, certifications or approvals performed by such design professionals, provided Owner and Engineer have specified to Contractor all performance and design criteria that such services must satisfy.

D. Pursuant to this Paragraph 6.21, Engineer's review and approval of design calculations and design drawings will be only for the limited purpose of checking for conformance with performance and design criteria given and the design concept expressed in the Contract Documents. Engineer's review and approval of Shop Drawings and other submittals (except design calculations and design drawings) will be only for the purpose stated in Paragraph 6.17.D.1.

E. Contractor shall not be responsible for the adequacy of the performance or design criteria required by the Contract Documents.

ARTICLE 7 – OTHER WORK AT THE SITE

7.01 *Related Work at Site*

A. Owner may perform other work related to the Project at the Site with Owner's employees, or through other direct contracts therefor, or have other work performed by utility owners. If such other work is not noted in the Contract Documents, then:

1. written notice thereof will be given to Contractor prior to starting any such other work; and

2. if Owner and Contractor are unable to agree on entitlement to or on the amount or extent, if any, of any adjustment in the Contract Price or Contract Times that should be allowed as a result of such other work, a Claim may be made therefor as provided in Paragraph 10.05.

B. Contractor shall afford each other contractor who is a party to such a direct contract, each utility owner, and Owner, if Owner is performing other work with Owner's employees, proper and safe

Copyright © 2007 National Society of Professional Engineers for EJCDC. All rights reserved.

access to the Site, provide a reasonable opportunity for the introduction and storage of materials and equipment and the execution of such other work, and properly coordinate the Work with theirs. Contractor shall do all cutting, fitting, and patching of the Work that may be required to properly connect or otherwise make its several parts come together and properly integrate with such other work. Contractor shall not endanger any work of others by cutting, excavating, or otherwise altering such work; provided, however, that Contractor may cut or alter others' work with the written consent of Engineer and the others whose work will be affected. The duties and responsibilities of Contractor under this Paragraph are for the benefit of such utility owners and other contractors to the extent that there are comparable provisions for the benefit of Contractor in said direct contracts between Owner and such utility owners and other contractors.

C. If the proper execution or results of any part of Contractor's Work depends upon work performed by others under this Article 7, Contractor shall inspect such other work and promptly report to Engineer in writing any delays, defects, or deficiencies in such other work that render it unavailable or unsuitable for the proper execution and results of Contractor's Work. Contractor's failure to so report will constitute an acceptance of such other work as fit and proper for integration with Contractor's Work except for latent defects and deficiencies in such other work.

7.02 *Coordination*

A. If Owner intends to contract with others for the performance of other work on the Project at the Site, the following will be set forth in Supplementary Conditions:

1. the individual or entity who will have authority and responsibility for coordination of the activities among the various contractors will be identified;

2. the specific matters to be covered by such authority and responsibility will be itemized; and

3. the extent of such authority and responsibilities will be provided.

B. Unless otherwise provided in the Supplementary Conditions, Owner shall have sole authority and responsibility for such coordination.

7.03 *Legal Relationships*

A. Paragraphs 7.01.A and 7.02 are not applicable for utilities not under the control of Owner.

B. Each other direct contract of Owner under Paragraph 7.01.A shall provide that the other contractor is liable to Owner and Contractor for the reasonable direct delay and disruption costs incurred by Contractor as a result of the other contractor's wrongful actions or inactions.

C. Contractor shall be liable to Owner and any other contractor under direct contract to Owner for the reasonable direct delay and disruption costs incurred by such other contractor as a result of Contractor's wrongful action or inactions.

Copyright © 2007 National Society of Professional Engineers for EJCDC. All rights reserved.

ARTICLE 8 – OWNER'S RESPONSIBILITIES

8.01 *Communications to Contractor*

A. Except as otherwise provided in these General Conditions, Owner shall issue all communications to Contractor through Engineer.

8.02 *Replacement of Engineer*

A. In case of termination of the employment of Engineer, Owner shall appoint an engineer to whom Contractor makes no reasonable objection, whose status under the Contract Documents shall be that of the former Engineer.

8.03 *Furnish Data*

A. Owner shall promptly furnish the data required of Owner under the Contract Documents.

8.04 *Pay When Due*

A. Owner shall make payments to Contractor when they are due as provided in Paragraphs 14.02.C and 14.07.C.

8.05 *Lands and Easements; Reports and Tests*

A. Owner's duties with respect to providing lands and easements and providing engineering surveys to establish reference points are set forth in Paragraphs 4.01 and 4.05. Paragraph 4.02 refers to Owner's identifying and making available to Contractor copies of reports of explorations and tests of subsurface conditions and drawings of physical conditions relating to existing surface or subsurface structures at the Site.

8.06 *Insurance*

A. Owner's responsibilities, if any, with respect to purchasing and maintaining liability and property insurance are set forth in Article 5.

8.07 *Change Orders*

A. Owner is obligated to execute Change Orders as indicated in Paragraph 10.03.

8.08 *Inspections, Tests, and Approvals*

A. Owner's responsibility with respect to certain inspections, tests, and approvals is set forth in Paragraph 13.03.B.

8.09 *Limitations on Owner's Responsibilities*

A. The Owner shall not supervise, direct, or have control or authority over, nor be responsible for, Contractor's means, methods, techniques, sequences, or procedures of construction, or the safety precautions and programs incident thereto, or for any failure of Contractor to comply with Laws

Copyright © 2007 National Society of Professional Engineers for EJCDC. All rights reserved.

and Regulations applicable to the performance of the Work. Owner will not be responsible for Contractor's failure to perform the Work in accordance with the Contract Documents.

8.10 *Undisclosed Hazardous Environmental Condition*

A. Owner's responsibility in respect to an undisclosed Hazardous Environmental Condition is set forth in Paragraph 4.06.

8.11 *Evidence of Financial Arrangements*

A. Upon request of Contractor, Owner shall furnish Contractor reasonable evidence that financial arrangements have been made to satisfy Owner's obligations under the Contract Documents.

8.12 *Compliance with Safety Program*

A. While at the Site, Owner's employees and representatives shall comply with the specific applicable requirements of Contractor's safety programs of which Owner has been informed pursuant to Paragraph 6.13.D.

ARTICLE 9 – ENGINEER'S STATUS DURING CONSTRUCTION

9.01 *Owner's Representative*

A. Engineer will be Owner's representative during the construction period. The duties and responsibilities and the limitations of authority of Engineer as Owner's representative during construction are set forth in the Contract Documents.

9.02 *Visits to Site*

A. Engineer will make visits to the Site at intervals appropriate to the various stages of construction as Engineer deems necessary in order to observe as an experienced and qualified design professional the progress that has been made and the quality of the various aspects of Contractor's executed Work. Based on information obtained during such visits and observations, Engineer, for the benefit of Owner, will determine, in general, if the Work is proceeding in accordance with the Contract Documents. Engineer will not be required to make exhaustive or continuous inspections on the Site to check the quality or quantity of the Work. Engineer's efforts will be directed toward providing for Owner a greater degree of confidence that the completed Work will conform generally to the Contract Documents. On the basis of such visits and observations, Engineer will keep Owner informed of the progress of the Work and will endeavor to guard Owner against defective Work.

B. Engineer's visits and observations are subject to all the limitations on Engineer's authority and responsibility set forth in Paragraph 9.09. Particularly, but without limitation, during or as a result of Engineer's visits or observations of Contractor's Work, Engineer will not supervise, direct, control, or have authority over or be responsible for Contractor's means, methods, techniques, sequences, or procedures of construction, or the safety precautions and programs incident thereto, or for any failure of Contractor to comply with Laws and Regulations applicable to the performance of the Work.

Copyright © 2007 National Society of Professional Engineers for EJCDC. All rights reserved.

9.03 *Project Representative*

A. If Owner and Engineer agree, Engineer will furnish a Resident Project Representative to assist Engineer in providing more extensive observation of the Work. The authority and responsibilities of any such Resident Project Representative and assistants will be as provided in the Supplementary Conditions, and limitations on the responsibilities thereof will be as provided in Paragraph 9.09. If Owner designates another representative or agent to represent Owner at the Site who is not Engineer's consultant, agent or employee, the responsibilities and authority and limitations thereon of such other individual or entity will be as provided in the Supplementary Conditions.

9.04 *Authorized Variations in Work*

A. Engineer may authorize minor variations in the Work from the requirements of the Contract Documents which do not involve an adjustment in the Contract Price or the Contract Times and are compatible with the design concept of the completed Project as a functioning whole as indicated by the Contract Documents. These may be accomplished by a Field Order and will be binding on Owner and also on Contractor, who shall perform the Work involved promptly. If Owner or Contractor believes that a Field Order justifies an adjustment in the Contract Price or Contract Times, or both, and the parties are unable to agree on entitlement to or on the amount or extent, if any, of any such adjustment, a Claim may be made therefor as provided in Paragraph 10.05.

9.05 *Rejecting Defective Work*

A. Engineer will have authority to reject Work which Engineer believes to be defective, or that Engineer believes will not produce a completed Project that conforms to the Contract Documents or that will prejudice the integrity of the design concept of the completed Project as a functioning whole as indicated by the Contract Documents. Engineer will also have authority to require special inspection or testing of the Work as provided in Paragraph 13.04, whether or not the Work is fabricated, installed, or completed.

9.06 *Shop Drawings, Change Orders and Payments*

A. In connection with Engineer's authority, and limitations thereof, as to Shop Drawings and Samples, see Paragraph 6.17.

B. In connection with Engineer's authority, and limitations thereof, as to design calculations and design drawings submitted in response to a delegation of professional design services, if any, see Paragraph 6.21.

C. In connection with Engineer's authority as to Change Orders, see Articles 10, 11, and 12.

D. In connection with Engineer's authority as to Applications for Payment, see Article 14.

9.07 *Determinations for Unit Price Work*

A. Engineer will determine the actual quantities and classifications of Unit Price Work performed by Contractor. Engineer will review with Contractor the Engineer's preliminary determinations

Copyright © 2007 National Society of Professional Engineers for EJCDC. All rights reserved.

on such matters before rendering a written decision thereon (by recommendation of an Application for Payment or otherwise). Engineer's written decision thereon will be final and binding (except as modified by Engineer to reflect changed factual conditions or more accurate data) upon Owner and Contractor, subject to the provisions of Paragraph 10.05.

9.08 *Decisions on Requirements of Contract Documents and Acceptability of Work*

A. Engineer will be the initial interpreter of the requirements of the Contract Documents and judge of the acceptability of the Work thereunder. All matters in question and other matters between Owner and Contractor arising prior to the date final payment is due relating to the acceptability of the Work, and the interpretation of the requirements of the Contract Documents pertaining to the performance of the Work, will be referred initially to Engineer in writing within 30 days of the event giving rise to the question.

B. Engineer will, with reasonable promptness, render a written decision on the issue referred. If Owner or Contractor believes that any such decision entitles them to an adjustment in the Contract Price or Contract Times or both, a Claim may be made under Paragraph 10.05. The date of Engineer's decision shall be the date of the event giving rise to the issues referenced for the purposes of Paragraph 10.05.B.

C. Engineer's written decision on the issue referred will be final and binding on Owner and Contractor, subject to the provisions of Paragraph 10.05.

D. When functioning as interpreter and judge under this Paragraph 9.08, Engineer will not show partiality to Owner or Contractor and will not be liable in connection with any interpretation or decision rendered in good faith in such capacity.

9.09 *Limitations on Engineer's Authority and Responsibilities*

A. Neither Engineer's authority or responsibility under this Article 9 or under any other provision of the Contract Documents nor any decision made by Engineer in good faith either to exercise or not exercise such authority or responsibility or the undertaking, exercise, or performance of any authority or responsibility by Engineer shall create, impose, or give rise to any duty in contract, tort, or otherwise owed by Engineer to Contractor, any Subcontractor, any Supplier, any other individual or entity, or to any surety for or employee or agent of any of them.

B. Engineer will not supervise, direct, control, or have authority over or be responsible for Contractor's means, methods, techniques, sequences, or procedures of construction, or the safety precautions and programs incident thereto, or for any failure of Contractor to comply with Laws and Regulations applicable to the performance of the Work. Engineer will not be responsible for Contractor's failure to perform the Work in accordance with the Contract Documents.

C. Engineer will not be responsible for the acts or omissions of Contractor or of any Subcontractor, any Supplier, or of any other individual or entity performing any of the Work.

D. Engineer's review of the final Application for Payment and accompanying documentation and all maintenance and operating instructions, schedules, guarantees, bonds, certificates of inspection, tests and approvals, and other documentation required to be delivered by Paragraph 14.07.A will only be to determine generally that their content complies with the requirements of,

Copyright © 2007 National Society of Professional Engineers for EJCDC. All rights reserved.

and in the case of certificates of inspections, tests, and approvals that the results certified indicate compliance with, the Contract Documents.

E. The limitations upon authority and responsibility set forth in this Paragraph 9.09 shall also apply to the Resident Project Representative, if any, and assistants, if any.

9.10 *Compliance with Safety Program*

A. While at the Site, Engineer's employees and representatives shall comply with the specific applicable requirements of Contractor's safety programs of which Engineer has been informed pursuant to Paragraph 6.13.D.

ARTICLE 10 – CHANGES IN THE WORK; CLAIMS

10.01 *Authorized Changes in the Work*

A. Without invalidating the Contract and without notice to any surety, Owner may, at any time or from time to time, order additions, deletions, or revisions in the Work by a Change Order, or a Work Change Directive. Upon receipt of any such document, Contractor shall promptly proceed with the Work involved which will be performed under the applicable conditions of the Contract Documents (except as otherwise specifically provided).

B. If Owner and Contractor are unable to agree on entitlement to, or on the amount or extent, if any, of an adjustment in the Contract Price or Contract Times, or both, that should be allowed as a result of a Work Change Directive, a Claim may be made therefor as provided in Paragraph 10.05.

10.02 *Unauthorized Changes in the Work*

A. Contractor shall not be entitled to an increase in the Contract Price or an extension of the Contract Times with respect to any work performed that is not required by the Contract Documents as amended, modified, or supplemented as provided in Paragraph 3.04, except in the case of an emergency as provided in Paragraph 6.16 or in the case of uncovering Work as provided in Paragraph 13.04.D.

10.03 *Execution of Change Orders*

A. Owner and Contractor shall execute appropriate Change Orders recommended by Engineer covering:

1. changes in the Work which are: (i) ordered by Owner pursuant to Paragraph 10.01.A, (ii) required because of acceptance of defective Work under Paragraph 13.08.A or Owner's correction of defective Work under Paragraph 13.09, or (iii) agreed to by the parties;

2. changes in the Contract Price or Contract Times which are agreed to by the parties, including any undisputed sum or amount of time for Work actually performed in accordance with a Work Change Directive; and

3. changes in the Contract Price or Contract Times which embody the substance of any written decision rendered by Engineer pursuant to Paragraph 10.05; provided that, in lieu of

Copyright © 2007 National Society of Professional Engineers for EJCDC. All rights reserved.

executing any such Change Order, an appeal may be taken from any such decision in accordance with the provisions of the Contract Documents and applicable Laws and Regulations, but during any such appeal, Contractor shall carry on the Work and adhere to the Progress Schedule as provided in Paragraph 6.18.A.

10.04 *Notification to Surety*

A. If the provisions of any bond require notice to be given to a surety of any change affecting the general scope of the Work or the provisions of the Contract Documents (including, but not limited to, Contract Price or Contract Times), the giving of any such notice will be Contractor's responsibility. The amount of each applicable bond will be adjusted to reflect the effect of any such change.

10.05 *Claims*

A. *Engineer's Decision Required*: All Claims, except those waived pursuant to Paragraph 14.09, shall be referred to the Engineer for decision. A decision by Engineer shall be required as a condition precedent to any exercise by Owner or Contractor of any rights or remedies either may otherwise have under the Contract Documents or by Laws and Regulations in respect of such Claims.

B. *Notice:* Written notice stating the general nature of each Claim shall be delivered by the claimant to Engineer and the other party to the Contract promptly (but in no event later than 30 days) after the start of the event giving rise thereto. The responsibility to substantiate a Claim shall rest with the party making the Claim. Notice of the amount or extent of the Claim, with supporting data shall be delivered to the Engineer and the other party to the Contract within 60 days after the start of such event (unless Engineer allows additional time for claimant to submit additional or more accurate data in support of such Claim). A Claim for an adjustment in Contract Price shall be prepared in accordance with the provisions of Paragraph 12.01.B. A Claim for an adjustment in Contract Times shall be prepared in accordance with the provisions of Paragraph 12.02.B. Each Claim shall be accompanied by claimant's written statement that the adjustment claimed is the entire adjustment to which the claimant believes it is entitled as a result of said event. The opposing party shall submit any response to Engineer and the claimant within 30 days after receipt of the claimant's last submittal (unless Engineer allows additional time).

C. *Engineer's Action*: Engineer will review each Claim and, within 30 days after receipt of the last submittal of the claimant or the last submittal of the opposing party, if any, take one of the following actions in writing:

1. deny the Claim in whole or in part;

2. approve the Claim; or

3. notify the parties that the Engineer is unable to resolve the Claim if, in the Engineer's sole discretion, it would be inappropriate for the Engineer to do so. For purposes of further resolution of the Claim, such notice shall be deemed a denial.

D. In the event that Engineer does not take action on a Claim within said 30 days, the Claim shall be deemed denied.

Copyright © 2007 National Society of Professional Engineers for EJCDC. All rights reserved.

E. Engineer's written action under Paragraph 10.05.C or denial pursuant to Paragraphs 10.05.C.3 or 10.05.D will be final and binding upon Owner and Contractor, unless Owner or Contractor invoke the dispute resolution procedure set forth in Article 16 within 30 days of such action or denial.

F. No Claim for an adjustment in Contract Price or Contract Times will be valid if not submitted in accordance with this Paragraph 10.05.

ARTICLE 11 – COST OF THE WORK; ALLOWANCES; UNIT PRICE WORK

11.01 *Cost of the Work*

A. *Costs Included:* The term Cost of the Work means the sum of all costs, except those excluded in Paragraph 11.01.B, necessarily incurred and paid by Contractor in the proper performance of the Work. When the value of any Work covered by a Change Order or when a Claim for an adjustment in Contract Price is determined on the basis of Cost of the Work, the costs to be reimbursed to Contractor will be only those additional or incremental costs required because of the change in the Work or because of the event giving rise to the Claim. Except as otherwise may be agreed to in writing by Owner, such costs shall be in amounts no higher than those prevailing in the locality of the Project, shall not include any of the costs itemized in Paragraph 11.01.B, and shall include only the following items:

1. Payroll costs for employees in the direct employ of Contractor in the performance of the Work under schedules of job classifications agreed upon by Owner and Contractor. Such employees shall include, without limitation, superintendents, foremen, and other personnel employed full time on the Work. Payroll costs for employees not employed full time on the Work shall be apportioned on the basis of their time spent on the Work. Payroll costs shall include, but not be limited to, salaries and wages plus the cost of fringe benefits, which shall include social security contributions, unemployment, excise, and payroll taxes, workers' compensation, health and retirement benefits, bonuses, sick leave, vacation and holiday pay applicable thereto. The expenses of performing Work outside of regular working hours, on Saturday, Sunday, or legal holidays, shall be included in the above to the extent authorized by Owner.

2. Cost of all materials and equipment furnished and incorporated in the Work, including costs of transportation and storage thereof, and Suppliers' field services required in connection therewith. All cash discounts shall accrue to Contractor unless Owner deposits funds with Contractor with which to make payments, in which case the cash discounts shall accrue to Owner. All trade discounts, rebates and refunds and returns from sale of surplus materials and equipment shall accrue to Owner, and Contractor shall make provisions so that they may be obtained.

3. Payments made by Contractor to Subcontractors for Work performed by Subcontractors. If required by Owner, Contractor shall obtain competitive bids from subcontractors acceptable to Owner and Contractor and shall deliver such bids to Owner, who will then determine, with the advice of Engineer, which bids, if any, will be acceptable. If any subcontract provides that the Subcontractor is to be paid on the basis of Cost of the Work plus a fee, the Subcontractor's Cost of the Work and fee shall be determined in the same manner as Contractor's Cost of the Work and fee as provided in this Paragraph 11.01.

Copyright © 2007 National Society of Professional Engineers for EJCDC. All rights reserved.

4. Costs of special consultants (including but not limited to engineers, architects, testing laboratories, surveyors, attorneys, and accountants) employed for services specifically related to the Work.

5. Supplemental costs including the following:

    a. The proportion of necessary transportation, travel, and subsistence expenses of Contractor's employees incurred in discharge of duties connected with the Work.

    b. Cost, including transportation and maintenance, of all materials, supplies, equipment, machinery, appliances, office, and temporary facilities at the Site, and hand tools not owned by the workers, which are consumed in the performance of the Work, and cost, less market value, of such items used but not consumed which remain the property of Contractor.

    c. Rentals of all construction equipment and machinery, and the parts thereof whether rented from Contractor or others in accordance with rental agreements approved by Owner with the advice of Engineer, and the costs of transportation, loading, unloading, assembly, dismantling, and removal thereof. All such costs shall be in accordance with the terms of said rental agreements. The rental of any such equipment, machinery, or parts shall cease when the use thereof is no longer necessary for the Work.

    d. Sales, consumer, use, and other similar taxes related to the Work, and for which Contractor is liable, as imposed by Laws and Regulations.

    e. Deposits lost for causes other than negligence of Contractor, any Subcontractor, or anyone directly or indirectly employed by any of them or for whose acts any of them may be liable, and royalty payments and fees for permits and licenses.

    f. Losses and damages (and related expenses) caused by damage to the Work, not compensated by insurance or otherwise, sustained by Contractor in connection with the performance of the Work (except losses and damages within the deductible amounts of property insurance established in accordance with Paragraph 5.06.D), provided such losses and damages have resulted from causes other than the negligence of Contractor, any Subcontractor, or anyone directly or indirectly employed by any of them or for whose acts any of them may be liable. Such losses shall include settlements made with the written consent and approval of Owner. No such losses, damages, and expenses shall be included in the Cost of the Work for the purpose of determining Contractor's fee.

    g. The cost of utilities, fuel, and sanitary facilities at the Site.

    h. Minor expenses such as telegrams, long distance telephone calls, telephone service at the Site, express and courier services, and similar petty cash items in connection with the Work.

    i. The costs of premiums for all bonds and insurance Contractor is required by the Contract Documents to purchase and maintain.

B. *Costs Excluded:* The term Cost of the Work shall not include any of the following items:

Copyright © 2007 National Society of Professional Engineers for EJCDC. All rights reserved.

1. Payroll costs and other compensation of Contractor's officers, executives, principals (of partnerships and sole proprietorships), general managers, safety managers, engineers, architects, estimators, attorneys, auditors, accountants, purchasing and contracting agents, expediters, timekeepers, clerks, and other personnel employed by Contractor, whether at the Site or in Contractor's principal or branch office for general administration of the Work and not specifically included in the agreed upon schedule of job classifications referred to in Paragraph 11.01.A.1 or specifically covered by Paragraph 11.01.A.4, all of which are to be considered administrative costs covered by the Contractor's fee.

2. Expenses of Contractor's principal and branch offices other than Contractor's office at the Site.

3. Any part of Contractor's capital expenses, including interest on Contractor's capital employed for the Work and charges against Contractor for delinquent payments.

4. Costs due to the negligence of Contractor, any Subcontractor, or anyone directly or indirectly employed by any of them or for whose acts any of them may be liable, including but not limited to, the correction of defective Work, disposal of materials or equipment wrongly supplied, and making good any damage to property.

5. Other overhead or general expense costs of any kind and the costs of any item not specifically and expressly included in Paragraphs 11.01.A.

C. *Contractor's Fee:* When all the Work is performed on the basis of cost-plus, Contractor's fee shall be determined as set forth in the Agreement. When the value of any Work covered by a Change Order or when a Claim for an adjustment in Contract Price is determined on the basis of Cost of the Work, Contractor's fee shall be determined as set forth in Paragraph 12.01.C.

D. *Documentation:* Whenever the Cost of the Work for any purpose is to be determined pursuant to Paragraphs 11.01.A and 11.01.B, Contractor will establish and maintain records thereof in accordance with generally accepted accounting practices and submit in a form acceptable to Engineer an itemized cost breakdown together with supporting data.

11.02 *Allowances*

A. It is understood that Contractor has included in the Contract Price all allowances so named in the Contract Documents and shall cause the Work so covered to be performed for such sums and by such persons or entities as may be acceptable to Owner and Engineer.

B. *Cash Allowances:*

1. Contractor agrees that:

a. the cash allowances include the cost to Contractor (less any applicable trade discounts) of materials and equipment required by the allowances to be delivered at the Site, and all applicable taxes; and

b. Contractor's costs for unloading and handling on the Site, labor, installation, overhead, profit, and other expenses contemplated for the cash allowances have been included in

Copyright © 2007 National Society of Professional Engineers for EJCDC. All rights reserved.

the Contract Price and not in the allowances, and no demand for additional payment on account of any of the foregoing will be valid.

C. *Contingency Allowance:*

1. Contractor agrees that a contingency allowance, if any, is for the sole use of Owner to cover unanticipated costs.

D. Prior to final payment, an appropriate Change Order will be issued as recommended by Engineer to reflect actual amounts due Contractor on account of Work covered by allowances, and the Contract Price shall be correspondingly adjusted.

11.03 *Unit Price Work*

A. Where the Contract Documents provide that all or part of the Work is to be Unit Price Work, initially the Contract Price will be deemed to include for all Unit Price Work an amount equal to the sum of the unit price for each separately identified item of Unit Price Work times the estimated quantity of each item as indicated in the Agreement.

B. The estimated quantities of items of Unit Price Work are not guaranteed and are solely for the purpose of comparison of Bids and determining an initial Contract Price. Determinations of the actual quantities and classifications of Unit Price Work performed by Contractor will be made by Engineer subject to the provisions of Paragraph 9.07.

C. Each unit price will be deemed to include an amount considered by Contractor to be adequate to cover Contractor's overhead and profit for each separately identified item.

D. Owner or Contractor may make a Claim for an adjustment in the Contract Price in accordance with Paragraph 10.05 if:

1. the quantity of any item of Unit Price Work performed by Contractor differs materially and significantly from the estimated quantity of such item indicated in the Agreement; and

2. there is no corresponding adjustment with respect to any other item of Work; and

3. Contractor believes that Contractor is entitled to an increase in Contract Price as a result of having incurred additional expense or Owner believes that Owner is entitled to a decrease in Contract Price and the parties are unable to agree as to the amount of any such increase or decrease.

ARTICLE 12 – CHANGE OF CONTRACT PRICE; CHANGE OF CONTRACT TIMES

12.01 *Change of Contract Price*

A. The Contract Price may only be changed by a Change Order. Any Claim for an adjustment in the Contract Price shall be based on written notice submitted by the party making the Claim to the Engineer and the other party to the Contract in accordance with the provisions of Paragraph 10.05.

Copyright © 2007 National Society of Professional Engineers for EJCDC. All rights reserved.

B. The value of any Work covered by a Change Order or of any Claim for an adjustment in the Contract Price will be determined as follows:

1. where the Work involved is covered by unit prices contained in the Contract Documents, by application of such unit prices to the quantities of the items involved (subject to the provisions of Paragraph 11.03); or

2. where the Work involved is not covered by unit prices contained in the Contract Documents, by a mutually agreed lump sum (which may include an allowance for overhead and profit not necessarily in accordance with Paragraph 12.01.C.2); or

3. where the Work involved is not covered by unit prices contained in the Contract Documents and agreement to a lump sum is not reached under Paragraph 12.01.B.2, on the basis of the Cost of the Work (determined as provided in Paragraph 11.01) plus a Contractor's fee for overhead and profit (determined as provided in Paragraph 12.01.C).

C. *Contractor's Fee:* The Contractor's fee for overhead and profit shall be determined as follows:

1. a mutually acceptable fixed fee; or

2. if a fixed fee is not agreed upon, then a fee based on the following percentages of the various portions of the Cost of the Work:

   a. for costs incurred under Paragraphs 11.01.A.1 and 11.01.A.2, the Contractor's fee shall be 15 percent;

   b. for costs incurred under Paragraph 11.01.A.3, the Contractor's fee shall be five percent;

   c. where one or more tiers of subcontracts are on the basis of Cost of the Work plus a fee and no fixed fee is agreed upon, the intent of Paragraphs 12.01.C.2.a and 12.01.C.2.b is that the Subcontractor who actually performs the Work, at whatever tier, will be paid a fee of 15 percent of the costs incurred by such Subcontractor under Paragraphs 11.01.A.1 and 11.01.A.2 and that any higher tier Subcontractor and Contractor will each be paid a fee of five percent of the amount paid to the next lower tier Subcontractor;

   d. no fee shall be payable on the basis of costs itemized under Paragraphs 11.01.A.4, 11.01.A.5, and 11.01.B;

   e. the amount of credit to be allowed by Contractor to Owner for any change which results in a net decrease in cost will be the amount of the actual net decrease in cost plus a deduction in Contractor's fee by an amount equal to five percent of such net decrease; and

   f. when both additions and credits are involved in any one change, the adjustment in Contractor's fee shall be computed on the basis of the net change in accordance with Paragraphs 12.01.C.2.a through 12.01.C.2.e, inclusive.

Copyright © 2007 National Society of Professional Engineers for EJCDC. All rights reserved.

12.02 *Change of Contract Times*

A. The Contract Times may only be changed by a Change Order. Any Claim for an adjustment in the Contract Times shall be based on written notice submitted by the party making the Claim to the Engineer and the other party to the Contract in accordance with the provisions of Paragraph 10.05.

B. Any adjustment of the Contract Times covered by a Change Order or any Claim for an adjustment in the Contract Times will be determined in accordance with the provisions of this Article 12.

12.03 *Delays*

A. Where Contractor is prevented from completing any part of the Work within the Contract Times due to delay beyond the control of Contractor, the Contract Times will be extended in an amount equal to the time lost due to such delay if a Claim is made therefor as provided in Paragraph 12.02.A. Delays beyond the control of Contractor shall include, but not be limited to, acts or neglect by Owner, acts or neglect of utility owners or other contractors performing other work as contemplated by Article 7, fires, floods, epidemics, abnormal weather conditions, or acts of God.

B. If Owner, Engineer, or other contractors or utility owners performing other work for Owner as contemplated by Article 7, or anyone for whom Owner is responsible, delays, disrupts, or interferes with the performance or progress of the Work, then Contractor shall be entitled to an equitable adjustment in the Contract Price or the Contract Times, or both. Contractor's entitlement to an adjustment of the Contract Times is conditioned on such adjustment being essential to Contractor's ability to complete the Work within the Contract Times.

C. If Contractor is delayed in the performance or progress of the Work by fire, flood, epidemic, abnormal weather conditions, acts of God, acts or failures to act of utility owners not under the control of Owner, or other causes not the fault of and beyond control of Owner and Contractor, then Contractor shall be entitled to an equitable adjustment in Contract Times, if such adjustment is essential to Contractor's ability to complete the Work within the Contract Times. Such an adjustment shall be Contractor's sole and exclusive remedy for the delays described in this Paragraph 12.03.C.

D. Owner, Engineer, and their officers, directors, members, partners, employees, agents, consultants, or subcontractors shall not be liable to Contractor for any claims, costs, losses, or damages (including but not limited to all fees and charges of engineers, architects, attorneys, and other professionals and all court or arbitration or other dispute resolution costs) sustained by Contractor on or in connection with any other project or anticipated project.

E. Contractor shall not be entitled to an adjustment in Contract Price or Contract Times for delays within the control of Contractor. Delays attributable to and within the control of a Subcontractor or Supplier shall be deemed to be delays within the control of Contractor.

Copyright © 2007 National Society of Professional Engineers for EJCDC. All rights reserved.

ARTICLE 13 – TESTS AND INSPECTIONS; CORRECTION, REMOVAL OR ACCEPTANCE OF DEFECTIVE WORK

13.01 *Notice of Defects*

A. Prompt notice of all defective Work of which Owner or Engineer has actual knowledge will be given to Contractor. Defective Work may be rejected, corrected, or accepted as provided in this Article 13.

13.02 *Access to Work*

A. Owner, Engineer, their consultants and other representatives and personnel of Owner, independent testing laboratories, and governmental agencies with jurisdictional interests will have access to the Site and the Work at reasonable times for their observation, inspection, and testing. Contractor shall provide them proper and safe conditions for such access and advise them of Contractor's safety procedures and programs so that they may comply therewith as applicable.

13.03 *Tests and Inspections*

A. Contractor shall give Engineer timely notice of readiness of the Work for all required inspections, tests, or approvals and shall cooperate with inspection and testing personnel to facilitate required inspections or tests.

B. Owner shall employ and pay for the services of an independent testing laboratory to perform all inspections, tests, or approvals required by the Contract Documents except:

1. for inspections, tests, or approvals covered by Paragraphs 13.03.C and 13.03.D below;

2. that costs incurred in connection with tests or inspections conducted pursuant to Paragraph 13.04.B shall be paid as provided in Paragraph 13.04.C; and

3. as otherwise specifically provided in the Contract Documents.

C. If Laws or Regulations of any public body having jurisdiction require any Work (or part thereof) specifically to be inspected, tested, or approved by an employee or other representative of such public body, Contractor shall assume full responsibility for arranging and obtaining such inspections, tests, or approvals, pay all costs in connection therewith, and furnish Engineer the required certificates of inspection or approval.

D. Contractor shall be responsible for arranging and obtaining and shall pay all costs in connection with any inspections, tests, or approvals required for Owner's and Engineer's acceptance of materials or equipment to be incorporated in the Work; or acceptance of materials, mix designs, or equipment submitted for approval prior to Contractor's purchase thereof for incorporation in the Work. Such inspections, tests, or approvals shall be performed by organizations acceptable to Owner and Engineer.

Copyright © 2007 National Society of Professional Engineers for EJCDC. All rights reserved.

E. If any Work (or the work of others) that is to be inspected, tested, or approved is covered by Contractor without written concurrence of Engineer, Contractor shall, if requested by Engineer, uncover such Work for observation.

F. Uncovering Work as provided in Paragraph 13.03.E shall be at Contractor's expense unless Contractor has given Engineer timely notice of Contractor's intention to cover the same and Engineer has not acted with reasonable promptness in response to such notice.

13.04 *Uncovering Work*

A. If any Work is covered contrary to the written request of Engineer, it must, if requested by Engineer, be uncovered for Engineer's observation and replaced at Contractor's expense.

B. If Engineer considers it necessary or advisable that covered Work be observed by Engineer or inspected or tested by others, Contractor, at Engineer's request, shall uncover, expose, or otherwise make available for observation, inspection, or testing as Engineer may require, that portion of the Work in question, furnishing all necessary labor, material, and equipment.

C. If it is found that the uncovered Work is defective, Contractor shall pay all claims, costs, losses, and damages (including but not limited to all fees and charges of engineers, architects, attorneys, and other professionals and all court or arbitration or other dispute resolution costs) arising out of or relating to such uncovering, exposure, observation, inspection, and testing, and of satisfactory replacement or reconstruction (including but not limited to all costs of repair or replacement of work of others); and Owner shall be entitled to an appropriate decrease in the Contract Price. If the parties are unable to agree as to the amount thereof, Owner may make a Claim therefor as provided in Paragraph 10.05.

D. If the uncovered Work is not found to be defective, Contractor shall be allowed an increase in the Contract Price or an extension of the Contract Times, or both, directly attributable to such uncovering, exposure, observation, inspection, testing, replacement, and reconstruction. If the parties are unable to agree as to the amount or extent thereof, Contractor may make a Claim therefor as provided in Paragraph 10.05.

13.05 *Owner May Stop the Work*

A. If the Work is defective, or Contractor fails to supply sufficient skilled workers or suitable materials or equipment, or fails to perform the Work in such a way that the completed Work will conform to the Contract Documents, Owner may order Contractor to stop the Work, or any portion thereof, until the cause for such order has been eliminated; however, this right of Owner to stop the Work shall not give rise to any duty on the part of Owner to exercise this right for the benefit of Contractor, any Subcontractor, any Supplier, any other individual or entity, or any surety for, or employee or agent of any of them.

13.06 *Correction or Removal of Defective Work*

A. Promptly after receipt of written notice, Contractor shall correct all defective Work, whether or not fabricated, installed, or completed, or, if the Work has been rejected by Engineer, remove it from the Project and replace it with Work that is not defective. Contractor shall pay all claims, costs, losses, and damages (including but not limited to all fees and charges of engineers,

Copyright © 2007 National Society of Professional Engineers for EJCDC. All rights reserved.

architects, attorneys, and other professionals and all court or arbitration or other dispute resolution costs) arising out of or relating to such correction or removal (including but not limited to all costs of repair or replacement of work of others).

B. When correcting defective Work under the terms of this Paragraph 13.06 or Paragraph 13.07, Contractor shall take no action that would void or otherwise impair Owner's special warranty and guarantee, if any, on said Work.

13.07 *Correction Period*

A. If within one year after the date of Substantial Completion (or such longer period of time as may be prescribed by the terms of any applicable special guarantee required by the Contract Documents) or by any specific provision of the Contract Documents, any Work is found to be defective, or if the repair of any damages to the land or areas made available for Contractor's use by Owner or permitted by Laws and Regulations as contemplated in Paragraph 6.11.A is found to be defective, Contractor shall promptly, without cost to Owner and in accordance with Owner's written instructions:

1. repair such defective land or areas; or

2. correct such defective Work; or

3. if the defective Work has been rejected by Owner, remove it from the Project and replace it with Work that is not defective, and

4. satisfactorily correct or repair or remove and replace any damage to other Work, to the work of others or other land or areas resulting therefrom.

B. If Contractor does not promptly comply with the terms of Owner's written instructions, or in an emergency where delay would cause serious risk of loss or damage, Owner may have the defective Work corrected or repaired or may have the rejected Work removed and replaced. All claims, costs, losses, and damages (including but not limited to all fees and charges of engineers, architects, attorneys, and other professionals and all court or arbitration or other dispute resolution costs) arising out of or relating to such correction or repair or such removal and replacement (including but not limited to all costs of repair or replacement of work of others) will be paid by Contractor.

C. In special circumstances where a particular item of equipment is placed in continuous service before Substantial Completion of all the Work, the correction period for that item may start to run from an earlier date if so provided in the Specifications.

D. Where defective Work (and damage to other Work resulting therefrom) has been corrected or removed and replaced under this Paragraph 13.07, the correction period hereunder with respect to such Work will be extended for an additional period of one year after such correction or removal and replacement has been satisfactorily completed.

E. Contractor's obligations under this Paragraph 13.07 are in addition to any other obligation or warranty. The provisions of this Paragraph 13.07 shall not be construed as a substitute for, or a waiver of, the provisions of any applicable statute of limitation or repose.

Copyright © 2007 National Society of Professional Engineers for EJCDC. All rights reserved.

13.08 *Acceptance of Defective Work*

A. If, instead of requiring correction or removal and replacement of defective Work, Owner (and, prior to Engineer's recommendation of final payment, Engineer) prefers to accept it, Owner may do so. Contractor shall pay all claims, costs, losses, and damages (including but not limited to all fees and charges of engineers, architects, attorneys, and other professionals and all court or arbitration or other dispute resolution costs) attributable to Owner's evaluation of and determination to accept such defective Work (such costs to be approved by Engineer as to reasonableness) and for the diminished value of the Work to the extent not otherwise paid by Contractor pursuant to this sentence. If any such acceptance occurs prior to Engineer's recommendation of final payment, a Change Order will be issued incorporating the necessary revisions in the Contract Documents with respect to the Work, and Owner shall be entitled to an appropriate decrease in the Contract Price, reflecting the diminished value of Work so accepted. If the parties are unable to agree as to the amount thereof, Owner may make a Claim therefor as provided in Paragraph 10.05. If the acceptance occurs after such recommendation, an appropriate amount will be paid by Contractor to Owner.

13.09 *Owner May Correct Defective Work*

A. If Contractor fails within a reasonable time after written notice from Engineer to correct defective Work, or to remove and replace rejected Work as required by Engineer in accordance with Paragraph 13.06.A, or if Contractor fails to perform the Work in accordance with the Contract Documents, or if Contractor fails to comply with any other provision of the Contract Documents, Owner may, after seven days written notice to Contractor, correct, or remedy any such deficiency.

B. In exercising the rights and remedies under this Paragraph 13.09, Owner shall proceed expeditiously. In connection with such corrective or remedial action, Owner may exclude Contractor from all or part of the Site, take possession of all or part of the Work and suspend Contractor's services related thereto, take possession of Contractor's tools, appliances, construction equipment and machinery at the Site, and incorporate in the Work all materials and equipment stored at the Site or for which Owner has paid Contractor but which are stored elsewhere. Contractor shall allow Owner, Owner's representatives, agents and employees, Owner's other contractors, and Engineer and Engineer's consultants access to the Site to enable Owner to exercise the rights and remedies under this Paragraph.

C. All claims, costs, losses, and damages (including but not limited to all fees and charges of engineers, architects, attorneys, and other professionals and all court or arbitration or other dispute resolution costs) incurred or sustained by Owner in exercising the rights and remedies under this Paragraph 13.09 will be charged against Contractor, and a Change Order will be issued incorporating the necessary revisions in the Contract Documents with respect to the Work; and Owner shall be entitled to an appropriate decrease in the Contract Price. If the parties are unable to agree as to the amount of the adjustment, Owner may make a Claim therefor as provided in Paragraph 10.05. Such claims, costs, losses and damages will include but not be limited to all costs of repair, or replacement of work of others destroyed or damaged by correction, removal, or replacement of Contractor's defective Work.

Copyright © 2007 National Society of Professional Engineers for EJCDC. All rights reserved.

D. Contractor shall not be allowed an extension of the Contract Times because of any delay in the performance of the Work attributable to the exercise by Owner of Owner's rights and remedies under this Paragraph 13.09.

ARTICLE 14 – PAYMENTS TO CONTRACTOR AND COMPLETION

14.01 *Schedule of Values*

A. The Schedule of Values established as provided in Paragraph 2.07.A will serve as the basis for progress payments and will be incorporated into a form of Application for Payment acceptable to Engineer. Progress payments on account of Unit Price Work will be based on the number of units completed.

14.02 *Progress Payments*

A. *Applications for Payments:*

1. At least 20 days before the date established in the Agreement for each progress payment (but not more often than once a month), Contractor shall submit to Engineer for review an Application for Payment filled out and signed by Contractor covering the Work completed as of the date of the Application and accompanied by such supporting documentation as is required by the Contract Documents. If payment is requested on the basis of materials and equipment not incorporated in the Work but delivered and suitably stored at the Site or at another location agreed to in writing, the Application for Payment shall also be accompanied by a bill of sale, invoice, or other documentation warranting that Owner has received the materials and equipment free and clear of all Liens and evidence that the materials and equipment are covered by appropriate property insurance or other arrangements to protect Owner's interest therein, all of which must be satisfactory to Owner.

2. Beginning with the second Application for Payment, each Application shall include an affidavit of Contractor stating that all previous progress payments received on account of the Work have been applied on account to discharge Contractor's legitimate obligations associated with prior Applications for Payment.

3. The amount of retainage with respect to progress payments will be as stipulated in the Agreement.

B. *Review of Applications:*

1. Engineer will, within 10 days after receipt of each Application for Payment, either indicate in writing a recommendation of payment and present the Application to Owner or return the Application to Contractor indicating in writing Engineer's reasons for refusing to recommend payment. In the latter case, Contractor may make the necessary corrections and resubmit the Application.

2. Engineer's recommendation of any payment requested in an Application for Payment will constitute a representation by Engineer to Owner, based on Engineer's observations of the executed Work as an experienced and qualified design professional, and on Engineer's

Copyright © 2007 National Society of Professional Engineers for EJCDC. All rights reserved.

review of the Application for Payment and the accompanying data and schedules, that to the best of Engineer's knowledge, information and belief:

a. the Work has progressed to the point indicated;

b. the quality of the Work is generally in accordance with the Contract Documents (subject to an evaluation of the Work as a functioning whole prior to or upon Substantial Completion, the results of any subsequent tests called for in the Contract Documents, a final determination of quantities and classifications for Unit Price Work under Paragraph 9.07, and any other qualifications stated in the recommendation); and

c. the conditions precedent to Contractor's being entitled to such payment appear to have been fulfilled in so far as it is Engineer's responsibility to observe the Work.

3. By recommending any such payment Engineer will not thereby be deemed to have represented that:

a. inspections made to check the quality or the quantity of the Work as it has been performed have been exhaustive, extended to every aspect of the Work in progress, or involved detailed inspections of the Work beyond the responsibilities specifically assigned to Engineer in the Contract Documents; or

b. there may not be other matters or issues between the parties that might entitle Contractor to be paid additionally by Owner or entitle Owner to withhold payment to Contractor.

4. Neither Engineer's review of Contractor's Work for the purposes of recommending payments nor Engineer's recommendation of any payment, including final payment, will impose responsibility on Engineer:

a. to supervise, direct, or control the Work, or

b. for the means, methods, techniques, sequences, or procedures of construction, or the safety precautions and programs incident thereto, or

c. for Contractor's failure to comply with Laws and Regulations applicable to Contractor's performance of the Work, or

d. to make any examination to ascertain how or for what purposes Contractor has used the moneys paid on account of the Contract Price, or

e. to determine that title to any of the Work, materials, or equipment has passed to Owner free and clear of any Liens.

5. Engineer may refuse to recommend the whole or any part of any payment if, in Engineer's opinion, it would be incorrect to make the representations to Owner stated in Paragraph 14.02.B.2. Engineer may also refuse to recommend any such payment or, because of subsequently discovered evidence or the results of subsequent inspections or tests, revise or revoke any such payment recommendation previously made, to such extent as may be necessary in Engineer's opinion to protect Owner from loss because:

Copyright © 2007 National Society of Professional Engineers for EJCDC. All rights reserved.

a. the Work is defective, or completed Work has been damaged, requiring correction or replacement;

b. the Contract Price has been reduced by Change Orders;

c. Owner has been required to correct defective Work or complete Work in accordance with Paragraph 13.09; or

d. Engineer has actual knowledge of the occurrence of any of the events enumerated in Paragraph 15.02.A.

C. *Payment Becomes Due:*

1. Ten days after presentation of the Application for Payment to Owner with Engineer's recommendation, the amount recommended will (subject to the provisions of Paragraph 14.02.D) become due, and when due will be paid by Owner to Contractor.

D. *Reduction in Payment:*

1. Owner may refuse to make payment of the full amount recommended by Engineer because:

a. claims have been made against Owner on account of Contractor's performance or furnishing of the Work;

b. Liens have been filed in connection with the Work, except where Contractor has delivered a specific bond satisfactory to Owner to secure the satisfaction and discharge of such Liens;

c. there are other items entitling Owner to a set-off against the amount recommended; or

d. Owner has actual knowledge of the occurrence of any of the events enumerated in Paragraphs 14.02.B.5.a through 14.02.B.5.c or Paragraph 15.02.A.

2. If Owner refuses to make payment of the full amount recommended by Engineer, Owner will give Contractor immediate written notice (with a copy to Engineer) stating the reasons for such action and promptly pay Contractor any amount remaining after deduction of the amount so withheld. Owner shall promptly pay Contractor the amount so withheld, or any adjustment thereto agreed to by Owner and Contractor, when Contractor remedies the reasons for such action.

3. Upon a subsequent determination that Owner's refusal of payment was not justified, the amount wrongfully withheld shall be treated as an amount due as determined by Paragraph 14.02.C.1 and subject to interest as provided in the Agreement.

14.03 *Contractor's Warranty of Title*

A. Contractor warrants and guarantees that title to all Work, materials, and equipment covered by any Application for Payment, whether incorporated in the Project or not, will pass to Owner no later than the time of payment free and clear of all Liens.

Copyright © 2007 National Society of Professional Engineers for EJCDC. All rights reserved.

14.04 *Substantial Completion*

A. When Contractor considers the entire Work ready for its intended use Contractor shall notify Owner and Engineer in writing that the entire Work is substantially complete (except for items specifically listed by Contractor as incomplete) and request that Engineer issue a certificate of Substantial Completion.

B. Promptly after Contractor's notification, Owner, Contractor, and Engineer shall make an inspection of the Work to determine the status of completion. If Engineer does not consider the Work substantially complete, Engineer will notify Contractor in writing giving the reasons therefor.

C. If Engineer considers the Work substantially complete, Engineer will deliver to Owner a tentative certificate of Substantial Completion which shall fix the date of Substantial Completion. There shall be attached to the certificate a tentative list of items to be completed or corrected before final payment. Owner shall have seven days after receipt of the tentative certificate during which to make written objection to Engineer as to any provisions of the certificate or attached list. If, after considering such objections, Engineer concludes that the Work is not substantially complete, Engineer will, within 14 days after submission of the tentative certificate to Owner, notify Contractor in writing, stating the reasons therefor. If, after consideration of Owner's objections, Engineer considers the Work substantially complete, Engineer will, within said 14 days, execute and deliver to Owner and Contractor a definitive certificate of Substantial Completion (with a revised tentative list of items to be completed or corrected) reflecting such changes from the tentative certificate as Engineer believes justified after consideration of any objections from Owner.

D. At the time of delivery of the tentative certificate of Substantial Completion, Engineer will deliver to Owner and Contractor a written recommendation as to division of responsibilities pending final payment between Owner and Contractor with respect to security, operation, safety, and protection of the Work, maintenance, heat, utilities, insurance, and warranties and guarantees. Unless Owner and Contractor agree otherwise in writing and so inform Engineer in writing prior to Engineer's issuing the definitive certificate of Substantial Completion, Engineer's aforesaid recommendation will be binding on Owner and Contractor until final payment.

E. Owner shall have the right to exclude Contractor from the Site after the date of Substantial Completion subject to allowing Contractor reasonable access to remove its property and complete or correct items on the tentative list.

14.05 *Partial Utilization*

A. Prior to Substantial Completion of all the Work, Owner may use or occupy any substantially completed part of the Work which has specifically been identified in the Contract Documents, or which Owner, Engineer, and Contractor agree constitutes a separately functioning and usable part of the Work that can be used by Owner for its intended purpose without significant interference with Contractor's performance of the remainder of the Work, subject to the following conditions:

Copyright © 2007 National Society of Professional Engineers for EJCDC. All rights reserved.

1. Owner at any time may request Contractor in writing to permit Owner to use or occupy any such part of the Work which Owner believes to be ready for its intended use and substantially complete. If and when Contractor agrees that such part of the Work is substantially complete, Contractor, Owner, and Engineer will follow the procedures of Paragraph 14.04.A through D for that part of the Work.

2. Contractor at any time may notify Owner and Engineer in writing that Contractor considers any such part of the Work ready for its intended use and substantially complete and request Engineer to issue a certificate of Substantial Completion for that part of the Work.

3. Within a reasonable time after either such request, Owner, Contractor, and Engineer shall make an inspection of that part of the Work to determine its status of completion. If Engineer does not consider that part of the Work to be substantially complete, Engineer will notify Owner and Contractor in writing giving the reasons therefor. If Engineer considers that part of the Work to be substantially complete, the provisions of Paragraph 14.04 will apply with respect to certification of Substantial Completion of that part of the Work and the division of responsibility in respect thereof and access thereto.

4. No use or occupancy or separate operation of part of the Work may occur prior to compliance with the requirements of Paragraph 5.10 regarding property insurance.

14.06 *Final Inspection*

A. Upon written notice from Contractor that the entire Work or an agreed portion thereof is complete, Engineer will promptly make a final inspection with Owner and Contractor and will notify Contractor in writing of all particulars in which this inspection reveals that the Work is incomplete or defective. Contractor shall immediately take such measures as are necessary to complete such Work or remedy such deficiencies.

14.07 *Final Payment*

A. *Application for Payment:*

1. After Contractor has, in the opinion of Engineer, satisfactorily completed all corrections identified during the final inspection and has delivered, in accordance with the Contract Documents, all maintenance and operating instructions, schedules, guarantees, bonds, certificates or other evidence of insurance, certificates of inspection, marked-up record documents (as provided in Paragraph 6.12), and other documents, Contractor may make application for final payment following the procedure for progress payments.

2. The final Application for Payment shall be accompanied (except as previously delivered) by:

   a. all documentation called for in the Contract Documents, including but not limited to the evidence of insurance required by Paragraph 5.04.B.6;

   b. consent of the surety, if any, to final payment;

   c. a list of all Claims against Owner that Contractor believes are unsettled; and

Copyright © 2007 National Society of Professional Engineers for EJCDC. All rights reserved.

d. complete and legally effective releases or waivers (satisfactory to Owner) of all Lien rights arising out of or Liens filed in connection with the Work.

3. In lieu of the releases or waivers of Liens specified in Paragraph 14.07.A.2 and as approved by Owner, Contractor may furnish receipts or releases in full and an affidavit of Contractor that: (i) the releases and receipts include all labor, services, material, and equipment for which a Lien could be filed; and (ii) all payrolls, material and equipment bills, and other indebtedness connected with the Work for which Owner might in any way be responsible, or which might in any way result in liens or other burdens on Owner's property, have been paid or otherwise satisfied. If any Subcontractor or Supplier fails to furnish such a release or receipt in full, Contractor may furnish a bond or other collateral satisfactory to Owner to indemnify Owner against any Lien.

B. *Engineer's Review of Application and Acceptance:*

1. If, on the basis of Engineer's observation of the Work during construction and final inspection, and Engineer's review of the final Application for Payment and accompanying documentation as required by the Contract Documents, Engineer is satisfied that the Work has been completed and Contractor's other obligations under the Contract Documents have been fulfilled, Engineer will, within ten days after receipt of the final Application for Payment, indicate in writing Engineer's recommendation of payment and present the Application for Payment to Owner for payment. At the same time Engineer will also give written notice to Owner and Contractor that the Work is acceptable subject to the provisions of Paragraph 14.09. Otherwise, Engineer will return the Application for Payment to Contractor, indicating in writing the reasons for refusing to recommend final payment, in which case Contractor shall make the necessary corrections and resubmit the Application for Payment.

C. *Payment Becomes Due:*

1. Thirty days after the presentation to Owner of the Application for Payment and accompanying documentation, the amount recommended by Engineer, less any sum Owner is entitled to set off against Engineer's recommendation, including but not limited to liquidated damages, will become due and will be paid by Owner to Contractor.

14.08 *Final Completion Delayed*

A. If, through no fault of Contractor, final completion of the Work is significantly delayed, and if Engineer so confirms, Owner shall, upon receipt of Contractor's final Application for Payment (for Work fully completed and accepted) and recommendation of Engineer, and without terminating the Contract, make payment of the balance due for that portion of the Work fully completed and accepted. If the remaining balance to be held by Owner for Work not fully completed or corrected is less than the retainage stipulated in the Agreement, and if bonds have been furnished as required in Paragraph 5.01, the written consent of the surety to the payment of the balance due for that portion of the Work fully completed and accepted shall be submitted by Contractor to Engineer with the Application for such payment. Such payment shall be made under the terms and conditions governing final payment, except that it shall not constitute a waiver of Claims.

Copyright © 2007 National Society of Professional Engineers for EJCDC. All rights reserved.

14.09 *Waiver of Claims*

A. The making and acceptance of final payment will constitute:

1. a waiver of all Claims by Owner against Contractor, except Claims arising from unsettled Liens, from defective Work appearing after final inspection pursuant to Paragraph 14.06, from failure to comply with the Contract Documents or the terms of any special guarantees specified therein, or from Contractor's continuing obligations under the Contract Documents; and

2. a waiver of all Claims by Contractor against Owner other than those previously made in accordance with the requirements herein and expressly acknowledged by Owner in writing as still unsettled.

ARTICLE 15 – SUSPENSION OF WORK AND TERMINATION

15.01 *Owner May Suspend Work*

A. At any time and without cause, Owner may suspend the Work or any portion thereof for a period of not more than 90 consecutive days by notice in writing to Contractor and Engineer which will fix the date on which Work will be resumed. Contractor shall resume the Work on the date so fixed. Contractor shall be granted an adjustment in the Contract Price or an extension of the Contract Times, or both, directly attributable to any such suspension if Contractor makes a Claim therefor as provided in Paragraph 10.05.

15.02 *Owner May Terminate for Cause*

A. The occurrence of any one or more of the following events will justify termination for cause:

1. Contractor's persistent failure to perform the Work in accordance with the Contract Documents (including, but not limited to, failure to supply sufficient skilled workers or suitable materials or equipment or failure to adhere to the Progress Schedule established under Paragraph 2.07 as adjusted from time to time pursuant to Paragraph 6.04);

2. Contractor's disregard of Laws or Regulations of any public body having jurisdiction;

3. Contractor's repeated disregard of the authority of Engineer; or

4. Contractor's violation in any substantial way of any provisions of the Contract Documents.

B. If one or more of the events identified in Paragraph 15.02.A occur, Owner may, after giving Contractor (and surety) seven days written notice of its intent to terminate the services of Contractor:

1. exclude Contractor from the Site, and take possession of the Work and of all Contractor's tools, appliances, construction equipment, and machinery at the Site, and use the same to the full extent they could be used by Contractor (without liability to Contractor for trespass or conversion);

Copyright © 2007 National Society of Professional Engineers for EJCDC. All rights reserved.

2. incorporate in the Work all materials and equipment stored at the Site or for which Owner has paid Contractor but which are stored elsewhere; and

3. complete the Work as Owner may deem expedient.

C. If Owner proceeds as provided in Paragraph 15.02.B, Contractor shall not be entitled to receive any further payment until the Work is completed. If the unpaid balance of the Contract Price exceeds all claims, costs, losses, and damages (including but not limited to all fees and charges of engineers, architects, attorneys, and other professionals and all court or arbitration or other dispute resolution costs) sustained by Owner arising out of or relating to completing the Work, such excess will be paid to Contractor. If such claims, costs, losses, and damages exceed such unpaid balance, Contractor shall pay the difference to Owner. Such claims, costs, losses, and damages incurred by Owner will be reviewed by Engineer as to their reasonableness and, when so approved by Engineer, incorporated in a Change Order. When exercising any rights or remedies under this Paragraph, Owner shall not be required to obtain the lowest price for the Work performed.

D. Notwithstanding Paragraphs 15.02.B and 15.02.C, Contractor's services will not be terminated if Contractor begins within seven days of receipt of notice of intent to terminate to correct its failure to perform and proceeds diligently to cure such failure within no more than 30 days of receipt of said notice.

E. Where Contractor's services have been so terminated by Owner, the termination will not affect any rights or remedies of Owner against Contractor then existing or which may thereafter accrue. Any retention or payment of moneys due Contractor by Owner will not release Contractor from liability.

F. If and to the extent that Contractor has provided a performance bond under the provisions of Paragraph 5.01.A, the termination procedures of that bond shall supersede the provisions of Paragraphs 15.02.B and 15.02.C.

15.03 *Owner May Terminate For Convenience*

A. Upon seven days written notice to Contractor and Engineer, Owner may, without cause and without prejudice to any other right or remedy of Owner, terminate the Contract. In such case, Contractor shall be paid for (without duplication of any items):

1. completed and acceptable Work executed in accordance with the Contract Documents prior to the effective date of termination, including fair and reasonable sums for overhead and profit on such Work;

2. expenses sustained prior to the effective date of termination in performing services and furnishing labor, materials, or equipment as required by the Contract Documents in connection with uncompleted Work, plus fair and reasonable sums for overhead and profit on such expenses;

3. all claims, costs, losses, and damages (including but not limited to all fees and charges of engineers, architects, attorneys, and other professionals and all court or arbitration or other

Copyright © 2007 National Society of Professional Engineers for EJCDC. All rights reserved.

dispute resolution costs) incurred in settlement of terminated contracts with Subcontractors, Suppliers, and others; and

4. reasonable expenses directly attributable to termination.

B. Contractor shall not be paid on account of loss of anticipated profits or revenue or other economic loss arising out of or resulting from such termination.

15.04 *Contractor May Stop Work or Terminate*

A. If, through no act or fault of Contractor, (i) the Work is suspended for more than 90 consecutive days by Owner or under an order of court or other public authority, or (ii) Engineer fails to act on any Application for Payment within 30 days after it is submitted, or (iii) Owner fails for 30 days to pay Contractor any sum finally determined to be due, then Contractor may, upon seven days written notice to Owner and Engineer, and provided Owner or Engineer do not remedy such suspension or failure within that time, terminate the Contract and recover from Owner payment on the same terms as provided in Paragraph 15.03.

B. In lieu of terminating the Contract and without prejudice to any other right or remedy, if Engineer has failed to act on an Application for Payment within 30 days after it is submitted, or Owner has failed for 30 days to pay Contractor any sum finally determined to be due, Contractor may, seven days after written notice to Owner and Engineer, stop the Work until payment is made of all such amounts due Contractor, including interest thereon. The provisions of this Paragraph 15.04 are not intended to preclude Contractor from making a Claim under Paragraph 10.05 for an adjustment in Contract Price or Contract Times or otherwise for expenses or damage directly attributable to Contractor's stopping the Work as permitted by this Paragraph.

ARTICLE 16 – DISPUTE RESOLUTION

16.01 *Methods and Procedures*

A. Either Owner or Contractor may request mediation of any Claim submitted to Engineer for a decision under Paragraph 10.05 before such decision becomes final and binding. The mediation will be governed by the Construction Industry Mediation Rules of the American Arbitration Association in effect as of the Effective Date of the Agreement. The request for mediation shall be submitted in writing to the American Arbitration Association and the other party to the Contract. Timely submission of the request shall stay the effect of Paragraph 10.05.E.

B. Owner and Contractor shall participate in the mediation process in good faith. The process shall be concluded within 60 days of filing of the request. The date of termination of the mediation shall be determined by application of the mediation rules referenced above.

C. If the Claim is not resolved by mediation, Engineer's action under Paragraph 10.05.C or a denial pursuant to Paragraphs 10.05.C.3 or 10.05.D shall become final and binding 30 days after termination of the mediation unless, within that time period, Owner or Contractor:

1. elects in writing to invoke any dispute resolution process provided for in the Supplementary Conditions; or

Copyright © 2007 National Society of Professional Engineers for EJCDC. All rights reserved.

2. agrees with the other party to submit the Claim to another dispute resolution process; or

3. gives written notice to the other party of the intent to submit the Claim to a court of competent jurisdiction.

ARTICLE 17 – MISCELLANEOUS

17.01 *Giving Notice*

A. Whenever any provision of the Contract Documents requires the giving of written notice, it will be deemed to have been validly given if:

1. delivered in person to the individual or to a member of the firm or to an officer of the corporation for whom it is intended; or

2. delivered at or sent by registered or certified mail, postage prepaid, to the last business address known to the giver of the notice.

17.02 *Computation of Times*

A. When any period of time is referred to in the Contract Documents by days, it will be computed to exclude the first and include the last day of such period. If the last day of any such period falls on a Saturday or Sunday or on a day made a legal holiday by the law of the applicable jurisdiction, such day will be omitted from the computation.

17.03 *Cumulative Remedies*

A. The duties and obligations imposed by these General Conditions and the rights and remedies available hereunder to the parties hereto are in addition to, and are not to be construed in any way as a limitation of, any rights and remedies available to any or all of them which are otherwise imposed or available by Laws or Regulations, by special warranty or guarantee, or by other provisions of the Contract Documents. The provisions of this Paragraph will be as effective as if repeated specifically in the Contract Documents in connection with each particular duty, obligation, right, and remedy to which they apply.

17.04 *Survival of Obligations*

A. All representations, indemnifications, warranties, and guarantees made in, required by, or given in accordance with the Contract Documents, as well as all continuing obligations indicated in the Contract Documents, will survive final payment, completion, and acceptance of the Work or termination or completion of the Contract or termination of the services of Contractor.

17.05 *Controlling Law*

A. This Contract is to be governed by the law of the state in which the Project is located.

17.06 *Headings*

A. Article and paragraph headings are inserted for convenience only and do not constitute parts of these General Conditions.

Copyright © 2007 National Society of Professional Engineers for EJCDC. All rights reserved.

SECTION 00 75 00

SUPPLEMENTARY CONDITIONS

These Supplementary Conditions amend or supplement the Standard General Conditions of the Construction Contract, EJCDC C-700 (2007 Edition) and other provisions of the Contract Documents as indicated below. All provisions which are not so amended or supplemented remain in full force and effect.

The terms used in these Supplementary Conditions have the meanings stated in the General Conditions. Additional terms used in these Supplementary Conditions have the meanings stated below, which are applicable to both the singular and plural thereof.

The address system used in these Supplementary Conditions is the same as the address system used in the General Conditions, with the prefix "SC" added thereto.

ARTICLE 1. DEFINITIONS AND TERMINOLOGY

SC-1.01.A.12

Add the following language at the beginning of the definition entitled "Contract Documents" in the General Conditions:

> “The Invitation to Bid, Instructions to Bidders”

SC-1.01.A.44

Delete the definition of Substantial Completion in the General Conditions in its entirety and add the following in its place:

> “*Substantial Completion* – The Work required by the Contract has been completed except for work having a Contract Price of less than one percent of the then adjusted total contract price, or substantially all of the Work has been completed and opened to Owner's use except for minor incomplete or unsatisfactory work items that do not materially impair the usefulness of the Work required by the Contract.”

SC-1.02.E

Delete paragraph 1.02.E of the General Conditions in its entirety and insert the following in its place:

> “E. The words “furnish”, “furnish and install”, “install”, and “provide” or words with similar meaning shall be interpreted, unless otherwise specifically stated, to mean “furnish and install complete in place and ready for service.”

Add the following new paragraph immediately after paragraph 1.02.F of the General Conditions:

"G. The terms used in these Supplementary Conditions which are defined in the Standard General Conditions of the Construction Contract (EJCDC C-700, 2007 Edition) have the meanings assigned to them in the General Conditions."

ARTICLE 2. PRELIMINARY MATTERS

SC-2.01

Delete paragraph 2.01.B of the General Conditions in its entirety and insert the following in its place:

"B. Before any Work at the Site is started, Contractor shall deliver to Owner, with a copy to Engineer, certificates of insurance (and other evidence of insurance requested by Owner) which Contractor is required to purchase and maintain in accordance with the requirements of Article 5.

1. Contractor shall include and identify on the certificate of insurance, indemnification as required by Article 6.20 of the General Conditions.

2. Contractor acknowledges that AECOM Technical Services, Inc. (AECOM) and the Springfield Water and Sewer Commission (SWSC) have no responsibility as a generator, treater, storer, or disposer of hazardous or toxic substances, including but not limited to asbestos-cement pipe found or identified in connection with the Project. Contractor agrees to defend, indemnify, and hold harmless AECOM and the Springfield Water and Sewer Commission from any claim or liability, arising out of Contractor's performance of Work under the Agreement and made or brought against AECOM and the Springfield Water and Sewer Commission for any actual or threatened environmental pollution or contamination except to the extent that either AECOM and the Springfield Water and Sewer Commission has negligently caused or contributed to any such pollution or contamination. This indemnification includes reasonable attorney fees and expenses incurred by AECOM and the Springfield Water and Sewer Commission in defense of such claim."

SC-2.03

Delete paragraph 2.03.A of the General Conditions in its entirety and insert the following in its place:

"A. The Contract Times will commence to run on the date specified in the written Notice to Proceed."

ARTICLE 3. CONTRACT DOCUMENTS: INTENT, AMENDING, REUSE

SC-3.01

Add the following new paragraphs immediately after paragraph 3.01.A of the General Conditions:

"1. Each and every provision of law and clause required by law to be inserted in the Contract shall be deemed to be inserted herein, and the Contract shall be read and enforced as though they were included herein. If through mistake or otherwise any such provision is not inserted, or is not correctly inserted, then upon the application of either party, the Contract shall forthwith be physically amended to make such insertion.

2. Sections of Division 1 – General Requirements govern the execution of the work of all sections of the specifications."

Add the following new paragraphs immediately after paragraph 3.01.C of the General Conditions:

"D. Priority/Conflict

1. Priority Among Contract Documents. In the event of conflict among the Contract Documents, the Contract Documents shall be construed according to the following priorities except as may otherwise be specifically stated:

Highest Priority:	Modifications to Contract Documents via Addenda
Second Priority:	Agreement
Third Priority:	Addenda-later date to take precedence
Fourth Priority:	Supplementary General Conditions
Fifth Priority:	General Conditions
Sixth Priority:	Drawings and Specifications

2. If there is a conflict between the Drawings and Specifications, the figured dimensions shall govern over the scaled dimensions. Detailed Drawings shall govern over the general Drawings. Larger scale Drawings shall take precedence over smaller scale Drawings. Drawings shall govern over Shop Drawings. Whenever there is a conflict concerning quality or quantity between or among notes, specifications, dimensions, details, or schedules in the Specifications or in the Drawings, or between the Specifications and the Drawings, or in all other instances not specifically noted above, the Contractor shall provide, unless otherwise directed by a

Modification of the Contract, the better quality or greater quantity of Work at no increase in the Contract Sum or in the Contract Times.

E. It is the intent of the Specification and Contract Documents to obtain an operable Project. Equipment, components, systems, etc. therein shall be made operable by the Contractor.

F. The Contract Drawings may be supplemented from time to time with additional Drawings by the Engineer as may be required to illustrate the Work or, as the Work progresses, with additional Drawings by the Contractor, subject to the approval of the Engineer. Supplementary Drawings, when issued by the Engineer or by the Contractor, after approval by the Engineer, shall be furnished in sufficient quantity to all those who, in the opinion of the Engineer, are affected by such Drawings."

ARTICLE 4. AVAILABILITY OF LANDS; SUBSURFACE AND PHYSICAL CONDITIONS; HAZARDOUS ENVIRONMENTAL CONDITOINS; REFERENCE POINTS

SC-4.01

Delete Paragraph 4.01.B of the General Conditions in its entirety.

SC-4.03

Delete paragraphs 4.03.A.1 and 4.03.A.2 in their entirety.

Add the following new paragraph immediately after paragraph 4.03.C of the General Conditions:

"D. Adjustments resulting from actual subsurface or latent physical conditions from those indicated will be in accordance with Massachusetts General Law, Chapter 30, Section 39N and the applicable provisions of the Contract Documents."

SC-4.04

Change "of" to "or" in paragraph 4.04.A.1 of the General Conditions.

Delete the following words from the first sentence of paragraph 4.04.B.1 of the General Conditions:

"or not shown or indicated with reasonable accuracy"

Delete the following words from the second sentence of paragraph 4.04.B.2 of the General Conditions:

"or not shown or indicated with reasonable accuracy"

Add the following new paragraph immediately after paragraph 4.04.B.2 of the General Conditions:

"3. The Owner, Engineer, and Engineer's Consultants shall not be liable to Contractor for any claims, costs, losses, or damages incurred or sustained by Contractor or in connection with any other project or anticipated project."

SC-4.05

Add the following new paragraph following paragraph 4.05.A of the General Conditions:

"B. Engineer may check the lines, elevations, reference marks, batter boards, etc., set by Contractor, and Contractor shall correct any errors disclosed by such check. Such a check shall not be considered as approval of Contractor's work and shall not relieve Contractor of the responsibility for accurate and satisfactory construction and completion of the entire Work. Contractor shall furnish personnel to assist Engineer in checking lines and grades."

SC-4.06

Delete the words "The Supplementary Conditions" in paragraph 4.06.A of the General Conditions and replace with "Contract Documents".

ARTICLE 5. BONDS AND INSURANCE

SC-5.01

Amend paragraph 5.01.B of the General Conditions by adding the following language to the end of the paragraph:

"Every bid bond, every performance bond, and every payment bond issued for any construction work in the Commonwealth of Massachusetts shall be the bond of a surety company organized pursuant to Massachusetts General Laws, Chapter 175, Section 105 or of a surety company authorized to do business in the Commonwealth of Massachusetts under the provisions of Massachusetts General Laws, Chapter 175, Section 106 and be approved by the U. S. Department of Treasury and acceptable as sureties and reinsurers on federal bonds under Title 31 of the United States Code, sections 9304 to 9308."

SC-5.03

Delete paragraph 5.03.B of the General Conditions in its entirety.

SC-5.04

The limits of liability for the insurance required by paragraph 5.04 of the General Conditions shall provide the following coverages for not less than the following amounts or greater where required by Laws and Regulations:

5.04.A.1 and 5.04.A.2 Worker's Compensation, etc. under paragraphs 5.04.A.1 and 5.04.A.2 of the General Conditions:

(1)	Worker's Compensation	
	Coverage B (Each Accident)	$500,000
(2)	Worker's Compensation	
	Disease (Each Employee)	$500,000
(3)	Employer's Liability	$1,000,000 Each accident
		$1,000,000 Disease per employee

5.04.A.3, 5.04.A.4, and 5.04.A.5 Contractor's Liability Insurance under paragraphs 5.04.A.3 through 5.04.A.5 of the General Conditions which shall also include completed operations and product liability coverages and eliminate the exclusion with respect to property under the care, custody, and control of Contractor:

(1)	General Aggregate	
	(Except Products—Completed Operations)	$3,000,000
(2)	Products--Completed Operations	
	Aggregate	$2,000,000
(3)	Personal and Advertising	
	Injury (Per Person/Organization)	$1,000,000
(4)	Each Occurrence (Bodily Injury and Property Damage)	$1,000,000
(5)	Property Damage Liability	
	Insurance, including Collapse and Underground coverages. If blasting is to be used, also include explosion coverage.	$5,000,000
(6)	Excess Liability:	

	General Aggregate	$10,000,000
	Each Occurrence	$10,000,000
(6)	Commercial Protective Liability:	
	General Aggregate	$10,000,000
	Each Occurrence	$5,000,000

5.04.A.6 Automobile Liability:

(1)	Bodily Injury:	
	Each Person	$1,000,000
	Each Accident	$1,000,000
	Property Damage:	
	Each Accident	$1,000,000

or

(2)	Combined Single Limit (Bodily Injury and Property Damage):	
	Each Accident	$5,000,000

5.04.A.7 Pollution Liability

Combined single limit each occurrence	$5 Million
Annual Aggregate	$10 Million

SC-5.04.B.3 The Contractual Liability coverage required by paragraph 5.04.B.3 in the General Conditions shall provide coverage for not less than the following amounts:

(1)	General Aggregate	$10,000,000
(2)	Each Occurrence (Bodily Injury and Property Damage)	$5,000,000

Builder's Risk (Fire Insurance) in an amount equal to the insurable value of the Contract.

SC-5.05

Delete paragraph 5.05. of the General Conditions in its entirety and insert the following in its place:

"5.05A. Contractor shall name the following as additional insured with full coverage as described above, SPRINGFIELD WATER AND SEWER COMMISSION, AECOM , and its affiliates, successors, and/or assigns as named insured."

SC-5.06

Delete the first sentence of Paragraph 5.06.A of the General Conditions and replace with the following:

"A. Contractor shall purchase and maintain property insurance upon the Work at the Site, written on the completed value form, in an amount equal to the total bid price for the completed construction."

Delete the last sentence in paragraph 5.06.A and paragraphs 5.06.A.1 through 5.06.A.7, 5.06.B, and 5.06.C.

SC-5.07

Delete paragraph 5.07.B of the General Conditions in its entirety.

Delete paragraph 5.07.C of the General Conditions in its entirety.

SC-5.08

Delete paragraph 5.08.B of the General Conditions in its entirety.

SC-5.10

Delete paragraph 5.10.A of the General Conditions in its entirety.

ARTICLE 6. CONTRACTOR'S RESPONSIBILITIES

SC-6.02

Add the following new paragraphs immediately after paragraph 6.02.B of the General Conditions:

"C. Regular working hours shall be defined as 8 hours per day, Monday through Friday, excluding holidays, between the hours of 7:00 AM and 4:00 PM. Requests to work other than regular working hours shall be submitted to Engineer and Owner not less than 48 hours prior to any proposed weekend work or scheduled extended work weeks. Occasional unscheduled overtime on weekdays may be permitted provided two hours notice is given to Engineer.

D. Contractor shall reimburse Owner for additional engineering and/or inspection costs incurred as a result of unscheduled overtime work in excess of the regular

working hours stipulated in paragraph SC-6.02.C or otherwise allowed by the Owner. At Owner's option, such costs may either be deducted from the Contractor's monthly payment request or deducted from retention prior to release of final payment."

SC-6.06

Delete the words "Supplementary Conditions" in the first sentence of paragraph 6.06.B of the General Conditions and replace with "Instructions to Bidders".

Add the following new paragraph immediately after paragraph 6.06.C.2 of the General Conditions:

"3. Contractor shall make payments to subcontractors in accordance with Massachusetts General Laws, Chapter 30, Section 39F."

Add the following new paragraph immediately following paragraph 6.06.D of the General Conditions:

"1. Owner or Engineer may furnish to any such Subcontractor, Supplier, or other person or organization, to the extent practicable, information about amounts paid to Contractor in accordance with Contractor's Applications for Payment on account of the particular Subcontractor's, Suppliers, other persons, or other organization's Work."

SC-6.07

Delete paragraphs 6.07.A, 6.07.B, and 6.07.C in their entirety and replace with the following:

"A. Contractor shall pay all license fees and royalties and assume all costs incident to the use in the performance of the Work of any invention, design, process, products, or device which is the subject of patent rights or copyrights held by others. Contractor shall indemnify and hold harmless Owner and Engineer, and anyone directly or indirectly employed by either of them from and against all claims, damages, losses and expenses, including attorney's fees, arising out of any infringement of patent rights or copyrights incident to the use in the performance of the Work or furnished by them in fulfillment of the requirements of this Contract. In the event of any claim or action by law on account of such patents or fees, it is agreed that the Owner may retain out of the monies which are, or which may become due the Contractor under this Contract, a sum of money sufficient to protect itself against loss, and to retain the same until said claims are paid or are satisfactorily adjusted."

SC-6.08

Delete the words “or, if there are no Bids…to the Work” from the third and fourth sentences of paragraph 6.08.A of the General Conditions and replace with “and the Contractor shall pay all charges of utility owners for connections to the Work”.

SC-6.09

Delete paragraph 6.09.B of the General Conditions in its entirety and replace with the following:

> “B. If Contractor observes that the Specifications or Drawings are at variance with any Laws or Regulations, they shall give Engineer prompt written notice thereof. If Contractor performs any Work knowing it to be contrary to such Laws or Regulations, and without such notice to Engineer, they shall bear all costs arising therefrom. The Contractor shall, at all times, observe and comply with and shall cause all their agents and employees and all their Subcontractor to observe and comply with all such existing Laws or Regulations, and shall protect and indemnify the Owner and the Engineer and the municipalities in which Work is being performed, and their officers and agents against any claim, civil penalty, fine or liability arising from or based on the violation of any such Law or Regulation, whether by themselves or their employees or any of their Subcontractors.”

SC-6.10

Add the following new paragraph immediately after paragraph 6.10.A of the General Conditions:

> “1. The materials and supplies to be used in the Work under this Contract are exempt from the Sales and Use Tax of the Commonwealth of Massachusetts. Contractor shall obtain the proper certificates, maintain the necessary records, and otherwise comply with all applicable requirements governing the exemption from sales tax.”

SC-6.13

After the word “Contractor” in the first sentence of paragraph 6.13.B of the General Conditions, insert the words “, subject to provisions of paragraph 6.09.B”.

SC-6.17

Add the following new paragraph immediately after paragraph 6.17.E of the General Conditions:

> “F. The accuracy of all such information submitted by the Contractor is the responsibility of the Contractor. In reviewing Shop Drawings, Samples, and similar submittals, the Engineer shall be entitled to rely upon the Contractor’s representation that such information is correct and accurate.”

SC-6.19

After the first sentence of paragraph 6.19.A of the General Conditions, insert the following:

“All materials or equipment delivered to the Site shall be accompanied by certificates, signed by an authorized officer of the supplier, and notarized guaranteeing that the materials or equipment conform to specification requirements. Such certificates shall be immediately turned over to the Engineer. Materials or equipment delivered to the Site without such certificates will be subject to rejection.”

SC-6.20

After the words “claims, costs” in the first sentence of paragraph 6.20.A of the General Conditions insert the words “, civil penalties, fines,”.

Add the following new paragraph immediately after paragraph 6.20.C.2 of the General Conditions:

“3. Nothing in the Contract Documents shall create or give to third parties any claim or right of action against the Contractor, the Owner, or the Engineer beyond such as may legally exist irrespective of the Contract.”

SC-6.21

Add the following new paragraph immediately after Paragraph 6.21.E

“6.21.F Contractor shall comply with all applicable provisions of the Massachusetts General Laws, Chapter 30, Section 39R regarding Contractor’s records.”

ARTICLE 7. OTHER WORK AT THE SITE

SC-7.02

Delete paragraph 7.02 of the General Conditions in its entirety.

SC-7.03

Delete the words “Owner and” from paragraph 7.03.B of the General Conditions.

Delete the words “Owner and” from paragraph 7.03.C of the General Conditions.

Add the following new paragraph immediately after paragraph 7.03.C of the General Conditions:

“D. Should Contractor cause damage to the work or property of any separate contractor at the site, or should any claim arising out of Contractor's performance of the Work at the site be made by any separate contractor against Contractor, Owner, Engineer, Engineer’s Consultants, or any other person, Contractor shall promptly attempt to settle with such other contractor by agreement, or to

otherwise resolve the dispute by law. Contractor shall, to the fullest extent permitted by Laws and Regulations, defend, indemnify and hold Owner, Engineer, and Engineer's Consultants, harmless from and against all claims, damages, losses, and expenses (including, but not limited to, fees of engineers, architects, attorneys, and other professionals, and court costs) arising directly, indirectly, or consequentially out of any action, legal or equitable, brought by any separate contractor against Owner, Engineer, or Engineer's Consultants, to the extent based on a claim arising out of the Contractor's performance of the Work. Should a separate contractor cause damage to the Work or property of Contractor or should the performance of Work by any separate contractor at the site give rise to any other claim, Contractor shall not institute any action, legal or equitable, against Owner, Engineer, or Engineer's Consultants or permit any action against any of them to be maintained and continued in its name or for its benefit in any court which seeks to impose liability on or to recover damages from Owner, Engineer, or Engineer's Consultants, on such damage or claim. If Contractor is delayed at any time in performing or furnishing Work by any act or neglect of a separate contractor and Owner and Contractor are unable to agree to the extent of any adjustment in Contract Times attributable thereto, Contractor may make a claim for an extension of times in accordance with Article 12.02. The Contractor hereby agrees that the Contractor shall have no claim for damages of any kind against the Owner, the Engineer, or the Engineer's consultants on account of any delay in the performance or furnishing of the Work and/or any delay or suspension of any portion of the Work, whether such delay is caused by the Owner, the Engineer, the Engineer's consultants or otherwise. The Contractor acknowledges that the Contractor's sole remedy for any such delay and/or suspension will be an extension of time in accordance with Article 12.02."

ARTICLE 8. OWNER'S RESPONSIBILITIES

SC-8.06

Delete paragraph 8.06 of the General Conditions in its entirety.

SC-8.07

Delete paragraph 8.07 of the General Conditions in its entirety.

SC-8.11

Delete paragraph 8.11 of the General Conditions in its entirety.

ARTICLE 9. ENGINEER'S STATUS DURING CONSTRUCTION

SC-9.01

Delete paragraph 9.01.A of the General Conditions in its entirety and replace with the following:

"A. Engineer will be the Owner's representative during the construction period, and Engineer's instructions shall be carried into effect promptly and efficiently."

SC-9.02

Delete paragraph 9.02.A of the General Conditions in its entirety.

SC-9.03

Add the following new paragraph immediately after paragraph 9.03.A of the General Conditions:

"1. Engineer will furnish a Resident Project Representative and assistants to assist Engineer in observing the performance of the Work. The duties and responsibilities of the Resident Project Representative will be as enumerated in a document entitled "Duties, Responsibilities, and Limitations of the Authority of Resident Project Representative" and will be made available to Contractor at the start of his work."

SC-9.04

Add the following new paragraph immediately after paragraph 9.04.A of the General Conditions:

"1. Engineer's interpretations will be made in accordance with Massachusetts General Laws, Chapter 30, Section 39P."

SC-9.09

Add the following new paragraphs immediately after paragraph 9.09.E of the General Conditions:

"F. Except upon written instructions of the Engineer, the Resident Project Representative:

1. Shall not authorize any deviation from the Contract Documents or approve any substitute materials or equipment.

2. Shall not exceed limitations of Engineer's authority as set forth in the Contract Documents.

3. Shall not undertake any of the responsibilities of Contractor, Subcontractors, or Contractor's superintendent, or expedite the Work.

4. Shall not advise on or issue directions relative to any aspect of the means, methods, techniques, sequences, or procedures of construction unless such is specifically called for in the Contract.

5. Shall not advise on or issue directions as to safety precautions and programs in connection with the Work."

ARTICLE 10. CHANGES IN THE WORK; CLAIMS

SC-10.01A

Add the following new paragraph immediately after paragraph 10.01.A of the General Conditions:

"1. Upon request of the Owner or the Engineer, the Contractor shall without cost to the Owner submit to the Engineer, in such form as the Engineer may require, an accurate written estimate of the cost of any such proposed extra Work or change. The estimate shall indicate the quantity and unit cost of each item of materials, and the number of hours of work and hourly rate for each class of labor, as well as the description and amounts of all other costs chargeable under the terms of this Article. Unit labor costs for the installation of each item of materials shall be shown if required by the Engineer. The contractor shall promptly revise and resubmit such estimate if the Engineer determines that it is not in compliance with the requirements of this Article, or that it contains errors of fact or mathematical errors. If required by the Engineer, in order to establish the exact cost of new Work added or previously required Work omitted, the Contractor shall obtain and furnish to the Engineer bona fide proposals from recognized suppliers for furnishing any material included in such Work. Such estimates shall be furnished promptly so as to occasion no delay in the Work, and shall be furnished at the Contractor's expense. The Contractor shall state in the estimate any extension of time required for the completion of the Work if the change or extra work is ordered."

ARTICLE 11. COST OF THE WORK; ALLOWANCES; UNIT PRICE WORK

SC-11.01

After the words "in Paragraph 11.01.B" in the last sentence of paragraph 11.01.A of the General Conditions, add the words "and no claims for extra cost shall be considered based on an escalation of labor costs throughout the period of the Contract".

In the second sentence of paragraph 11.01.A.1 delete the word "superintendents".

Add the following sentence to the end of paragraph 11.01.A.2 of the General Conditions:

"No claims for extra cost shall be considered based on an escalation of material costs throughout the period of the Contract."

Delete the second sentence of paragraph 11.01.A.3 of the General Conditions in its entirety.

Delete paragraph 11.01.A.4 of the General Conditions in its entirety.

Delete paragraph 11.01.A.5.a of the General Conditions in its entirety.

Delete paragraph 11.01.A.5.f of the General Conditions in its entirety.

Delete paragraph 11.01.A.5.g of the General Conditions in its entirety.

Delete paragraph 11.01.A.5.h of the General Conditions in its entirety.

SC-11.03

Delete the words “materially and significantly” from paragraph 11.03.D.1 and insert the words “by more than plus or minus twenty percent (20%)”.

ARTICLE 12. CHANGE OF CONTRACT PRICE; CHANGE OF CONTRACT TIME

SC-12.03

In the second sentence of paragraph 12.03.A of the General Conditions, replace the words “include, but not be limited to,” with “limited to”.

Delete paragraph 12.03.B of the General Conditions in its entirety.

ARTICLE 13. TESTS AND INSPECTIONS; CORRECTION, REMOVAL OR ACCEPTANCE OF DEFECTIVE WORK

SC-13.03

Delete paragraph 13.03.B of the General Conditions in its entirety and replace with the following:

> “B. Owner shall employ and pay for inspections and testing services specifically noted as such in the Contract. All others required shall be the responsibility of the Contractor.”

Delete paragraph 13.03.C of the General Conditions in its entirety and replace with the following:

> “C. If the Contract Documents, laws, ordinances, rules, regulations, or orders of any public authority having jurisdiction require any Work to be specifically inspected, tested, or approved by some public body, Contractor shall assume full responsibility therefore, pay all costs in connection therewith, and furnish Engineer the required certificates of inspection, testing, or approval.”

Add the following new paragraph immediately after paragraph 13.03.F of the General Conditions:

"G. The Owner reserves the right to independently perform at its own expense, laboratory tests on random samples of material or performance tests on equipment delivered to the Site. These tests, if made, will be conducted in accordance with the appropriate referenced standards or Specification requirements. The entire shipment represented by a given sample, samples, or piece of equipment may be rejected on the basis of the failure of samples or pieces of equipment to meet specified test requirements. All rejected materials or equipment shall be removed from the Site, whether stored or installed in the Work, and the required replacement shall be made, all at no additional cost to the Owner."

SC-13.05

After the words "conform to the Contract Documents" in the first sentence of paragraph 13.05.A of the General Conditions, add the words "or if the Work interferes with the operation of the existing facility".

Add the following sentence to the end of paragraph 13.05.A of the General Conditions:

"If Owner stops work pursuant to this paragraph, Contractor shall be entitled to no extension of Contract Times or increase in Contract Price."

SC-13.06

Add the following new paragraph immediately after paragraph 13.06.B of the General Conditions:

"C. At any time during the progress of the Work and up to the date of final acceptance, the Engineer shall have the right to reject any Work which does not conform to the requirements of the Contract Documents, even though such Work has been previously inspected and paid for. Any omissions or failure on the part of the Engineer to disapprove or reject any Work or materials at the time of inspection shall not be construed as an acceptance of any defective Work or materials."

ARTICLE 14. PAYMENTS TO CONTRACTOR AND COMPLETION

SC-14.01

Add the following new paragraph immediately after paragraph 14.01.A of the General Conditions:

“B. The Contractor shall submit for the Engineer’s approval, a complete breakdown of all lump sum items in the Proposal. This breakdown, modified as directed by the Engineer, will be used as a basis for preparing estimates and establishing progress payments.

SC-14.02

Add the following new paragraphs immediately after paragraph 14.02.A.1 of the General Conditions:

“a. Only the following items of material and equipment will be accepted for delivery at the site or at a local bonded warehouse and included in progress estimates in advance of actual requirement, subject to all conditions stated below.

i. Pre-Cast Concrete Special Structures.

b. Materials and equipment listed above will not be included in progress estimates until the requirements stated herein have been fulfilled.

c. The Contractor must present an invoice to the Engineer for each item of material or equipment he is requesting payment for. The invoice must be broken down to show the costs for the actual materials.

d. Sufficient monies have been allocated in the payment requisition line items to cover all of the costs listed in "a" above, plus the costs of physically installing the items of work.

e. The materials have been submitted and approved for use in this Project.

f. The Contractor has, at the time of delivery, given the Engineer written notice of the delivery using the form provided by the Engineer.

g. The material is acceptably stored and protected. Storage in a bonded warehouse will require proof of bonding, and insurance coverage specifically for the item being stored.

h. The manufacturer's short and/or long term storage requirements have been received by the Engineer, prior to payment.

i. The Contractor has established a program to implement the manufacturer's required storage procedures. Said program to consist of at the very least a written schedule of daily, weekly, monthly, routine maintenance requirements for each piece of equipment. A copy of this schedule to be presented to the Engineer prior to each requisition submittal, signed by the Contractor, stating that the required maintenance has been performed.

j. Signed, notarized Title Transfers, format to be furnished by the Engineer, must be furnished for each item of equipment.

k. When the above have been complied with to the satisfaction of the Engineer, payment will be authorized for the full invoice values of the item, less normal retainage and less all costs for O&M Manuals, installation, incidental items included for payment, spare parts, start-up certification, training, testing, final acceptance testing, and installation."

Delete paragraph 14.02.A.3 of the General Conditions in its entirety and replace with the following:

"3. Progress payment request shall include the percentage of the total amount of the Contract which has been completed from the start-up of the Project to and including the last day of the preceding month, or other mutually agreed upon day of the month accompanied by such data and supporting evidence as Owner or Engineer may require."

Add the following new paragraphs immediately after paragraph 14.02.A.3 of the General Conditions:

"4. Forms to be used shall be prepared by the Contractor and submitted to the Engineer for approval.

5. At the option of the Owner, partial payment up to the estimated value, less retainage, may be allowed for any materials and equipment not incorporated in the Work, pursuant to the following conditions:

a. Major equipment items stored off site shall be stored in a bonded warehouse and properly maintained during storage.

b. Equipment or materials stored on the Site shall be properly stored, protected, and maintained.

c. For any partial payment the Contractor shall submit, with their monthly progress payment from each material or equipment manufacturer, bills or invoices indicating actual material cost.

d. Contractor shall submit evidence that they have paid for materials or equipment stored and for which the Engineer has authorized partial payment and previous progress payments, prior to submission of the next monthly payment request."

Delete the words "10 days" from the first sentence of paragraph 14.02.B.1 of the General Conditions and insert the words "30 days".

Delete the words “as provided in the Agreement” from paragraph 14.02.D.3 of the General Conditions and insert the words “equal to the federal funds rate as established from time to time by the Federal Open Market Committee of the United States Federal Reserve”.

SC-14.04

Delete paragraphs 14.04.A through 14.04.D of the General Conditions in their entirety and replace with the following:

“A. Contractor may, in writing to Owner and Engineer, certify that the entire Project is substantially complete and request that Engineer issue a certificate of Substantial Completion. Within a reasonable time thereafter, Owner, Contractor, and Engineer shall make an inspection of the Project to determine the status of completion. If Engineer and Owner do not consider the Project substantially complete, Engineer will notify Contractor in writing giving their reasons therefor. If Engineer and Owner consider the Project substantially complete, Engineer will prepare and deliver to Owner a tentative certificate of Substantial Completion and the responsibilities between Owner and Contractor for maintenance, heat, and utilities. There shall be attached to the certificate a tentative list of items to be completed or corrected before Substantial Completion, and the certificate shall fix the time within which such items shall be completed or corrected, said time to be within Contract Time.”

SC-14.05

Delete paragraph 14.05.A of the General Conditions in its entirety and replace with the following:

“A. Prior to Substantial Completion of the Project, Owner may request Contractor in writing to permit them to use a specified part of the Project which they believe they may use without significant interference with construction of the other parts of the Project. If Contractor agrees, they will certify to Owner and Engineer that said part of the Project is substantially complete and request the Engineer to issue a certificate of Substantial Completion for that part of the Project. Within a reasonable time thereafter, Owner, Contractor, and Engineer shall make an inspection of that part of the Project to determine its status of completion. If Engineer and Owner do not consider that it is substantially complete, Engineer will notify Contractor in writing giving their reasons therefor. If Engineer and Owner consider that part of the Project to be substantially complete, Engineer will execute and deliver to Owner and Contractor a certificate to that effect, fixing the date of Substantial Completion as to that part of the Project, attaching thereto a tentative list of items to be completed or corrected before Substantial Completion of the entire Project, and fixing the responsibility between Owner and Contractor for maintenance, heat, and utilities as to that part of the Project. Owner shall have the right to exclude Contractor from any part of the Project which Engineer

has so certified to be substantially complete, but Owner shall allow Contractor reasonable access to complete items on the tentative list".

ARTICLE 15. SUSPENSION OF WORK AND TERMINATION

SC-15.01

Delete paragraph 15.01.A of the General Conditions in its entirety and insert in place thereof the following:

"A. Owner may order, at any time and without cause, suspension of the Work in accordance with Massachusetts General Laws, Chapter 30, Section 39O."

Insert the following new paragraph immediately after paragraph 15.01.A of the General Conditions:

"B. Should the Owner suspend Work due to repeated unsafe Work conducted by the Contractor, the Contractor shall not be allowed any adjustment in Contract Price or extension of Contract Times attributed to this delay."

SC-15.02

After the word "jurisdiction" in paragraph 15.02.A.2 of the General Conditions, add the words "(including those governing employee safety)".

Delete paragraph 15.02.D of the General Conditions in its entirety.

SC-15.05

Add the following new paragraphs immediately after paragraph 15.04 of the General Conditions:

"15.05 Assignment of Contract

A. Contractor shall not assign, transfer, convey or otherwise dispose of the Contract, or of their legal right, title, or interest in or to the same or to any part thereof, without the prior written consent of the Owner. Contractor shall not assign by power of attorney or otherwise any monies due to them and payable under this Contract without the prior written consent of the Owner. Such consent, if given, will in no way relieve the Contractor from any of the obligations of this Contract. Owner shall not be bound to abide by or observe the requirements of any such assignment."

ARTICLE 16. DISPUTE RESOLUTION

SC-16.01

Delete paragraph 16.01 of the General Conditions in its entirety and insert in place thereof the following:

"A. It is the express intention and agreement of the parties that all disputes related to this Agreement or to any rights or any relationship between the parties arising therefrom shall be solely and exclusively initiated and maintained through legal proceedings in the courts of the Commonwealth located in Hampden County, Massachusetts. The Contractor and Owner each irrevocably consents to the jurisdiction of such courts in any such actions or proceedings, and waives its right to a trial by jury.

B. Contractor shall carry on the Work and maintain the progress schedule during the dispute resolution proceedings, unless otherwise agreed by Contractor and Owner in writing."

ARTICLE 17. MISCELLANEOUS

SC-17.01

Add the following new paragraph immediately after paragraph 17.01.A of the General Conditions:

"B. No oral statement of any person whomsoever shall in any manner or degree modify or otherwise affect the terms of this Contract. Any notice to the Contractor, from Owner and Engineer, relative to any part of this Contract shall be in writing."

SC-17.06

Add the following sentence to 17.06.A: "The headings or titles of any article, paragraph, subparagraph, section, subsection, or part of the Contract Documents shall not be deemed to limit or restrict the article, paragraph, section, or part."

Add the following new paragraphs immediately after paragraph 17.06 of the General Conditions:

"17.07 Legal Address of Contractor

A. Contractor's business address and his office at or near the site of the Work are both hereby designated as places to which communications shall be delivered. The depositing of any letter, notice, or other communication in a postpaid wrapper directed to the Contractor's business address in a post office box regularly maintained by the Post Office Department or the delivery at either designated address of any letter, notice, or other communication by mail or otherwise shall be deemed sufficient service thereof upon Contractor, and the date of such

service shall be the date of receipt. The first-named address may be changed at any time by an instrument in writing, executed and acknowledged by Contractor and delivered to Engineer. Service of any notice, letter, or other communication upon the Contractor personally shall likewise be deemed sufficient service.

17.08 Wage Rates

A. The requirements and provisions of all applicable laws and any amendments thereto as to the employment of labor, and the schedules of minimum wage rates established in accordance with such laws shall be a part of these Contract Documents.

B. The said schedules of wages shall continue to be the minimum rates to be paid during the life of this contract and a legible copy of said schedules shall be kept posted in a conspicuous place at the site of the Work."

SC-18

Add the following new paragraphs immediately after Article 17 of the General Conditions:

"ARTICLE 18 – LIQUIDATED DAMAGES FOR FAILURE TO COMPLETE WORK ON TIME

18.01 Liquidated Damages

A. If the Contractor shall fail to complete the Work within the Contract Times, or extension of time granted by the Owner in accordance with Article 12, then the Contractor will pay to the Owner the amount for liquidated damages as specified in the Contract for each calendar day that the Contractor shall be in default after the time stipulated in the Contract Documents.

B. The Contractor shall not be charged with liquidated damages or any excess cost when delay in completion of the Work is due to the following and the Contractor has promptly given written notice of such delay to the Owner or Engineer.

C. To any preference, priority, or allocation order duly issued by the Owner.

D. To unforeseeable causes beyond the control and without the fault or negligence of the Contractor, including but not restricted to, acts of God, or of the public enemy, acts of the Owner, acts of another Contractor in the performance of a contract with the Owner, fires, floods, epidemics, quarantine restrictions, strikes, freight embargoes; and abnormal and unforeseeable weather; and

E. To any delays of Subcontractors occasioned by any of the causes specified in Paragraphs 18.01.C and 18.01.D of this Article."

PART II – ADDITIONAL PROVISIONS

State Government Provisions included herein have been selected from those to which specific references have been made elsewhere in the Contract Documents. Each and every other provision of law or clause required by law to be inserted in this Contract shall be deemed to be also inserted herein in accordance with paragraph SC-3.01 of the Supplementary Conditions.

1.1. Applicable provisions of Massachusetts General Laws and Regulations and/or the United States Code and Code of Federal Regulations govern this Contract, and any provision violation of the foregoing shall be deemed null, void and of no effect.

2.0. MASSACHUSETTS WAGE RATES

2.1. Minimum Wage Rates as determined by the Commissioner of Department of Labor and Industries under the provision of the Massachusetts General Laws, Chapter 149, Section 26 to 27D, as amended, apply to this project. It is the responsibility of the Contractor, before the bid opening, to request, if necessary, any additional information on Minimum Wage Rates for those tradespeople who may be employed for the proposed work under this Contract.

2.2 The schedule of Minimum Wage Rates is included in the Supplementary Conditions Part IV – Wage Determination Schedules.

3.0. CHANGE ORDERS

3.1. Following the Notice of Award and prior to execution of the Contract the prospective contractor shall submit to the Engineer for review documentation that will assist in developing the markup percentage to be used as Direct Labor. Prior to execution of the Contract by the Owner, the prospective contractor will work out an agreement on what percentage markup shall be used as Direct Labor Costs and this agreement shall become a part of the Contract Documents at the time the Contract is executed.

4.0. RECORD DRAWINGS

4.1. The Owner shall be responsible for the preparation of all record drawings required by this Contract. This responsibility may be delegated to the Owner's representative. The responsibility for preparation of record drawings shall not be delegated or transferred to the Contractor. The preparation and maintenance of as-built drawings and as-built data remains the responsibility of the Contractor and shall be maintained and provided to the Engineer as specified elsewhere in the Technical Specifications.

5.0. UTILITY UNDERGROUND PLANT DAMAGE PREVENTION SYSTEM

5.1. All excavation within public or private ways are subject to the requirements of Massachusetts General Laws, Chapter 82, Section 40.

6.0 The Contractor is responsible for submitting for and obtaining all building construction permits for this Project. The Contractor will pay for all building construction permit fees.

7.0 Markups are limited to the not to exceed amounts defined in the Agreement.

8.0 AMERICAN IRON AND STEEL REQUIREMENTS

8.1 Section 746 of Title VII of the Consolidated Appropriations Act of 2017 (Division A – Agriculture, Rural Development, Food and Drug Administration, and Related Agencies Appropriations Act, 2017) and subsequent statutes mandating domestic preference applies an American Iron and Steel requirement to this Project. The amendments to the Clean Water Act, as part of WRRDA, apply the American Iron and Steel (AIS) requirements to all treatment works projects. Compliance with AIS is required in accordance with Public Law 113-76, the Consolidated Appropriations Act of 2014. All iron and steel products used in this Project must be produced in the United States. The term “iron and steel products” means the following products made primarily of iron or steel: lined or unlined pipes and fittings, manhole covers and other municipal castings, hydrants, tanks, flanges, pipe clamps and restraints, valves, structural steel, reinforced precast concrete, and Construction Materials.

8.2 The following waivers apply to this Contract:

8.2.1 De Minimis.

8.2.2 Minor Components.

8.2.3 Pig iron and direct reduced iron.

8.2.4 The Build American Buy America (BABA) requirements are waived for this Project based on EPA’s Decision Memorandum titled Adjustment Period Waiver of Section 70914(a) of P.L. 117-58, Build America, Buy America Act for SRF Projects that have initiated Design Planning issued September 2, 2022.

END OF SECTION

CONSTRUCTION BID SPECIFICATIONS
SPECIAL PROVISIONS FOR DISADVANTAGED BUSINESS ENTERPRISES
MASSACHUSETTS DEPARTMENT OF ENVIRONMENTAL PROTECTION
DIVISION OF MUNICIPAL SERVICES

DISADVANTAGED BUSINESS ENTERPRISE PROGRAM BACKGROUND

In May 2008 a United States Environmental Protection Agency (EPA) rule became effective that changed the Minority Business Enterprise (MBE) and Women Business Enterprise (WBE) Program to a Disadvantaged Business Enterprise (DBE) Program.

For firms to qualify under the old MBE/WBE program they needed to be socially disadvantaged and had to be certified by the Supplier Diversity Office (SDO). Under the new DBE rule, the firms must be both **socially** and **economically** disadvantaged, **citizens of the United States**, and certified as a DBE. Women and certain minorities are presumed to be socially disadvantaged. The economic disadvantage is measured by the owner's initial and continuing personal net worth of less than $1,320,000.

Because the Clean Water Act requires the use of MBEs and WBEs, these firms will still be utilized in the State Revolving Fund (SRF) Loan Program, but they must also be certified as DBEs.

SDO will continue to be the certifying agency for the SRF program. SDO certifies firms under the federal Department of Transportation program, which is acceptable for use in the SRF program. An additional form has been added to the DBE package to verify that DBEs are owned or controlled by United States citizens.

BID SPECIFICATIONS

I. In this contract, the percentage of business activity to be performed by disadvantaged business enterprise(s) (DBE) shall not be less than the following percentages of the total contract price or the percentage submitted by the contractor in the Schedule of Participation, whichever is greater:

Disadvantaged MBE (D/MBE) 4.2% Disadvantaged WBE (D/WBE) 4.5%

II. DEFINITIONS

For the purpose of these provisions, the following terms are defined as follows:

A. Awarding Authority – Entity that awards a prime contract under a State Revolving Fund loan.

B. Bidder - Any individual, partnership, joint venture, corporation, or firm submitting a price, directly or through an authorized representative, for the purpose of performing construction or construction related activities under a Contract.

C. Certified DBE – A DBE certified by the United States Small Business Administration, under its 8(a) Business Development Program (13 CFR part 124, subpart A) or its Small Disadvantaged Business Program (13 CFR part 124, subpart B); The United States Department of Transportation (DOT), under its regulations for Participation by DBSs in DOT programs (49 CFR parts 23 and 26); or SDO in accordance with 40 CFR part 33; provided that the certification meets the U.S. citizenship requirement under 40 CFR §33.202 or §33.203.

D. Compliance Unit - A subdivision of MassDEP's Affirmative Action Office designated to ensure compliance under these provisions.

E. Contractor - Any business that contracts or subcontracts for construction, demolition, renovation, survey, or maintenance work in the various classifications customarily used in work and that is acting in this capacity under the subject contract.

F. Construction Related Services - Those services performed at the work site ancillary to, and/or in support of, the construction work, such as hauling, trucking, equipment operation, surveying or other technical services, etc. For the purposes hereof, supply and delivery of materials (e.g. pre-cast concrete elements) to the site by a supplier who has manufactured those goods, or substantially altered them before re-sales shall be considered as "construction related services

G. Construction Work - The activities at the work site, or labor and use of materials in the performance of constructing, reconstructing, erecting, demolishing, altering, installing, disassembling, excavating, etc, all or part of the work required by the Contract Documents.

H. Disadvantaged Business Enterprise (DBE) - An entity owned or controlled by a socially and economically disadvantaged individual as described by Public Law 102-389 (42 U.S.C. 4370d) or an entity owned and controlled by a socially and economically disadvantaged individual as described by Title X of the Clean Air Act Amendments of 1990 (42 U.S.C. 7601 note); a Small Business Enterprise (SBE); a Small Business in a Rural Area (SBRA); or a Labor Surplus Area Firm (LAF), a Historically Underutilized Business (HUB) Zone Small Business Concern, or a concern under a successor program.

I. Equipment Rental Firm - A firm that owns equipment and assumes actual and contractual responsibility for renting said equipment to perform a useful function of the work of the contract consistent with normal industry practice

J. Good Faith Efforts – The race and/or gender neutral measures described in 40 CFR 33, subpart C.

K. HUBZone - A historically underutilized business zone, which is an area located within one or more qualified census tracts, qualified metropolitan counties, or lands within the external boundaries of an Indian reservation.

L. HUBZone small business concern - A small business concern that appears on the List of Qualified HUBZone Small Business Concerns maintained by the Small Business Administration.

M. Joint Venture - An agreement between SDO certified DBE and a non-DBE or non-DBE controlled enterprise.

1. A pairing of companies will be considered a DBE joint venture if the SDO certified DBE which is part of the relationship has more than 51% of the profits that are derived from that project.

2. A joint venture between a certified DBE subcontractor and a non DBE subcontractor, in which the DBE for that proportion of the joint venture's contract equal to the DBE participation in the joint venture.

3. Whenever a general bid is filed by a joint venture with a certified DBE participant in the joint venture that does not exercise more than 51% control over management and profits, that joint venture shall be entitled to credit as a DBE for that portion of the joint venture's contract equal to the DBE participation in the joint venture. Minority As deemed by SDO.

N. Labor surplus area firm (LSAF) - A concern that together with its first-tier subcontractors will perform substantially in labor surplus areas (as identified by the Department of Labor in accordance with 20 CFR part 654). Performance is substantially in labor surplus areas if the costs incurred under the contract on account of manufacturing, production or performance of appropriate services in labor surplus areas exceed 50 percent of the contract price.

O. Letter of Intent – Certified document signed by the principal(s) of the DBE with respect to the work to be performed under contract.

P. Local Government Unit (LGU) – A city, town, or municipal district which applies for a loan under the Clean Water Trust Program.

Q. Material Supplier – A vendor certified by SDO as a DBE in sales to supply industry from an established place of business or source of supply, and that vendor.

1. Manufactures goods from raw materials, or substantially utilizes them in the work, or substantially alters them before resale, entitling the general contractor to DBE credit for 100% of the purchase order.

2. Provides and maintains a storage facility for materials utilized in the work, entitling the general contractor to DBE credit for 10% of the purchase order

R. Minority and Women Business Enterprise (M/WBE) – Any business concern certified by the SDO as a bona-fide M/WBE. A bona-fide M/WBE is a business whose minority group/women ownership interests are real, which have at least 51% ownership and control over management and operation.

S. Percent of Total Price – Is the percentage to be paid to the DBE, work they perform, as compared to the total bid price

T. Recipient - An agency, person or political subdivision which has been awarded or received financial assistance by the Trust or MassDEP.

U. Small business, small business concern or small business enterprise (SBE) - A concern, including its affiliates, that is independently owned and operated, not dominant in the field of operation in which it is bidding, and qualified as a small business under the criteria and size standards in 13 CFR part 121.

V. Small business in a rural area (SBRA) - A small business operating in an area identified as a rural county with a code 6-9 in the Rural-Urban continuum Classification Code developed by the United States Department of Agriculture in 1980.

W. SDO – The Supplier Diversity Office.

X. Subcontractor – A company, firm, joint venture, or individual who enters into an agreement with a contractor to provide services pursuant to an award of financial assistance.

Y. Total Contract Price – The total amount of compensation to be paid for all materials, work or services rendered in the performance of the contract

Z. Trust – The Massachusetts Clean Water Trust established by M.G.L. c.29.

III. REQUIREMENTS FOR CONTRACT AWARD

DBE packages must be submitted by the two lowest bidders on the project. Following bid opening, the LGU shall notify the two lowest bidders to submit DBE packages to the LGU or the LGUs consultant, as directed. By the close of business on the third business day after notification, the two lowest bidders, including a bidder who is a MBE, WBE or DBE, shall submit the following information:

A. A Schedule of Participation (Form EEO-DEP-190). The Schedule of Participation shall list those certified DBEs the bidder intends to use in fulfilling the contract obligations, the nature of the work to be performed by each certified DBE subcontractor and the total price they are to be paid.

1. A listing of bona-fide services such as a professional, technical, consultant or managerial services, assistance in the procurement of essential personnel, facilities, equipment, materials, or supplies required for performance of the contract, and reasonable fees or commissions charged.

2. A listing of haulers, truckers, or delivery services, not the contractors, including reasonable fees for delivery of said materials or supplies to be included on the project.

B. A Letter of Intent (Form EEO-DEP-191) for each DBE the bidder intends to use on the project. The Letter of Intent shall include, among other things, a reasonable description of the work the certified DBE is proposing to perform and the prices the certified DBE proposes to charge for the work. A Letter of Intent shall be jointly signed by the certified DBE and the General Contractor who proposes to use them in the performance of the Contract.

C. Each DBE must also sign and return the DBE Certification of United States Citizenship form to verify that the firm is owned or controlled by a United States citizen.

D. The SDO "DBE Certification" as prepared by each certified DBE.

E. A completed Request for Waiver form and backup documentation should the goals not be achieved (See IV below).

IV. REQUIREMENTS FOR MODIFICATION OR WAIVERS.

The bidder shall make every possible effort to meet the minimum requirements of certified DBE participation. If the percentage of DBE participation submitted by the bidder on its Schedule of Participation (EEO-DEP-190) does not meet the minimum requirements, the bid may be rejected by the Awarding Authority and found not to be eligible for award of the contract.

In the event that the bidder is unable to meet the minimum requirements of DBE participation, the bidder shall submit with his/her submittal required in Section III. Requirement of Contract Award a Request for Waiver form (EEO-DEP-490). The Awarding Authority shall review the waiver request to determine if the request should proceed. If approved by the Awarding Authority, the Awarding Authority shall submit the waiver request and supporting documentation, with a recommendation to MassDEP within five days of receipt of the Request for Waiver. MassDEP in conjunction with the project manager, Compliance Unit, will determine whether the waiver will be granted.

The waiver request shall include detailed information as specified below to establish that the bidder has made a good faith effort to comply with the minimum requirements of DBE participation specified in Part I. In addition, the bidder must show that such efforts were undertaken well in advance of the time set for opening of bids to allow adequate response. A waiver request shall include the following:

A. A detailed record of the effort made to contact and negotiate with the certified DBE, including, but not limited to:

   1. names, addresses and telephone numbers of all such companies contacted;

   2. copies of written notices(s) which were sent to certified DBE potential subcontractors, prior to bid opening;

   3. a detailed statement as to why each subcontractor contacted (i) was not willing to do the job or (ii) was not qualified to perform the work as solicited; and

   4. in the case(s) where a negotiated price could not be reached the bidder should detail what efforts were made to reach an agreement on a competitive price;

   5. copies of advertisements, dated not less than ten (10) days prior to bid opening, as appearing in general publications, trade-oriented publications, and applicable minority/ women-focused media detailing the opportunities for participation.

B. MassDEP may require the bidder to produce such additional information as it deems appropriate.

C. No later than fifteen (15) days after MassDEP receives all required information and documentation, it shall make a decision in writing, whether the waiver is granted and shall provide that determination to the bidder and Awarding Authority. If the waiver request is denied, the facts upon which a denial is based will be set forth in writing. If the waiver request is denied, the bid shall be rejected by the Awarding Authority, or the contract will be determined ineligible for SRF funding.

   If a Request for Waiver is denied by MassDEP and the bid is rejected by the Awarding Authority, the Awarding Authority may then move to the second bidder on the project. At the Awarding Authority's discretion, it may collect a DBE package from the third bidder on the project.

V. DISADVANTAGED BUSINESS ENTERPRISES PARTICIPATION

A. Reporting Requirements

1. The Contractor's utilization of certified DBEs will be documented based upon submittal of the LGU's monthly Payment Requisitions as reported on Form-2000. The Form-2000 form will show all certified DBEs performing work on the project regardless of any billing activity for that month. For auditing and accounting purposes, the Contractor periodically may be required to submit copies of canceled checks verifying that payments have been made to the certified DBE as listed on the schedule. The Contractor may also be required to submit current schedules on utilization of all DBEs to indicate when their services will commence and be billed for.

2. During the life of the Contract, the Contractor's fulfillment of the percentage requirements in Part I shall be determined with reference to the Contract price as follows:

   A. If the price in the Contract executed exceeds the base bid price (e.g., because an alternate was selected or because unit prices were used in awarding the Contract), the Contractor shall submit for approval by MassDEP a revised Schedule of Participation by certified DBEs satisfying the percentage requirements and such other information concerning additional DBE participation as may be requested by MassDEP.

   B. If the Contract price increases after execution due to change orders or other adjustments, MassDEP may require the Contractor to subcontract additional work or to purchase additional goods and services from certified DBEs up to the percentages stated in Part I.

VI. COMPLIANCE

A. If the Schedule or any of the Letters of Intent are materially incomplete or not submitted in a timely manner, the LGU may rescind its vote of award; treat the bid informal as to substance and reject the bid. If the bid is incomplete in any other respect than the Schedule the LGU with the approval of MassDEP may waive the informalities upon satisfactory completion of the required information by the Contractor and the certified DBE as applicable.

B. If the LGU finds that the percentage of certified DBE participation submitted by the contractor on its Schedule does not meet the percentage requirement in Part I, it shall rescind its vote of award and find such contractor not to be eligible for award of the contract.

C. The Contractor shall not perform with its own organization, or subcontract to any other primary or subcontractor any work designated for the named certified DBEs on the schedule submitted by the Contractor under Part III without the approval of MassDEP.

D. A Contractor's compliance with the percentage requirement in Part I shall continue to be determined by reference to the required percentage of the total contract price as stated in Section I even though the total of actual contract payments may be greater or less than the bid price.

E. If the Contractor for reasons beyond its control cannot comply with Part III in accordance with the Schedule submitted under Part III, Section B, the contractor must submit to MassDEP as soon as they are aware of the deficiency, the reason for its inability to comply. Proposed revisions to the Schedule stating how the contractor intends to meet its obligations under these conditions must be submitted within ten (10) working days of notification.

F. If the Contractor is becomes aware by any means that that DBE is no longer certified, the Contractor shall immediately notify MassDEP. The Contractor shall use good faith efforts to retain a substitute certified DBE.

G. If a certified DBE listed by the bidder in its Schedule of M/WBE contractors fails to obtain a performance or payment bond requested by the bidder, said failure shall not entitle the bidder to avoid the requirements of Part III (A). After a bidder has been awarded the contract, he shall not change the certified DBE listed in its Schedule at the time of the award or make any other such substitutions without the written approval of MassDEP.

VII. SANCTIONS

A. If the Contractor does not comply with the terms of these Special Provisions, the Awarding Authority may (1) suspend any payment for the work that should have been performed by a certified DBE pursuant to the schedule, or (2) require specific performance of the Contractor's obligation by requiring the Contractor to subcontract with a DBE for any contract or specialty item at the contract price established for that item in the proposal submitted by the Contractor.

B. To the extent that the Contractor has not complied with the terms of these Special Provisions, the Awarding Authority may retain in connection with Estimates and Payments an amount determined by multiplying the bid price of this contract by the percentage in Section I, less the amount paid to DBE's for work performed under the contract and any payments already suspended under VII A.

C. The Awarding Authority may suspend, terminate or cancel this contract, in whole or in part, or may call upon the Contractor's surety to perform all terms and conditions in the contract, unless the contractor is able to demonstrate his compliance with the terms

of these Special Provisions, and further deny to the Contractor, the right to participate in any future contracts awarded by the Awarding Authority for a period of up to three years.

D. In any proceeding involving the imposition of sanctions by the Awarding Authority, no sanctions shall be imposed if the Awarding Authority finds that the contractor has taken every possible measure to comply with these Special Provisions or that some other justifiable reason exists for waiving these Special Provisions in whole or in part.

E. The contract shall provide such information as is necessary in the judgment of the Awarding Authority to ascertain its compliance with the terms of these Special Provisions.

F. A contractor shall have the right to request suspension of any sanctions imposed under this section upon demonstrating that he is in compliance with these Special Provisions.

DISADVANTAGED BUSINESS ENTERPRISE PARTICIPATION
MASSACHUSETTS DEPARTMENT OF ENVIRONMENTAL PROTECTION
DIVISION OF MUNICIPAL SERVICES

SCHEDULE OF PARTICIPATION FOR SRF CONSTRUCTION

Project Title: _____ **Project Location:** _____

Disadvantaged Minority Business Enterprise Participation in the SRF Loan Work

Name & Address of D/MBE	Nature of Participation	Dollar Value of Participation
1.		
2.		
3.		
	Total D/MBE Commitment:	**$**
Percentage D/MBE Participation = (Total D/MBE Commitment) / (Bid Price) **=**		**%**

Disadvantaged Women Business Enterprise Participation in the SRF Loan Work

Name & Address of D/WBE	Nature of Participation	Dollar Value of Participation
1.		
2.		
3.		
	Total D/WBE Commitment:	**$**
Percentage D/WBE Participation = (Total D/WBE Commitment) / (Bid Price) **=**		**%**

The Bidder agrees to furnish implementation reports as required by MassDEP to indicate the D/MBEs and D/WBE(s) which it has used or intends to use. Breach of this commitment constitutes a breach of the contract.

Name of Bidder: _____

Date: _____ By: _____
Signature

NOTE: Participation of a DBE may be counted in only their certified category; the same dollar participation cannot be used in computing the percentage of D/MBE participation and again of D/WBE participation.

LETTER OF INTENT FOR SRF CONSTRUCTION

This form is to be completed by the D/MBE and D/WBE and must be submitted by the Bidder as part of the bid. A separate form must be completed for each D/MBE and D/WBE involved in the project.

Project Title: _____ Project Location: _____

TO: _____
(Name of Bidder)

FROM: _____
(Please Indicate Status [ ] D/MBE or [ ] D/WBE)

º I/we intend to perform work in connection with the above project as (check one):

[ ] An individual
[ ] A corporation
[ ] Other (explain): _____
[ ] A partnership
[ ] A joint venture with: _____

º It is understood that if you are awarded the contract, you intend to enter into an agreement to perform the activity described below for the prices indicated.

DBE PARTICIPATION

Description of Activity	Date of Project Commencement	$ Amount	% Bid Price
		$	**%**

º The undersigned certify that they will enter into a formal agreement upon execution of the contract for the above referenced project.

BIDDER	**DBE**
(Authorized Original Signature) Date ADDRESS:	(Authorized Original Signature) Date ADDRESS:
TELEPHONE #:	TELEPHONE #:
FEIN:	FEIN:

ORIGINALS:

- **º Compliance Mgr. City/Town Project Location**
- **º DEP Program Manager for DEP's AAO Director**

*** Attach a copy of current (within 2 years) DBE Certification**

DBE CERTIFICATION OF UNITED STATES CITIZENSHIP

For the SRF program, under the EPA Disadvantage Business Enterprise (DBE) Rule, a DBE must be owned or controlled by a socially and economically disadvantaged person that is also a **citizen of the United States** (*See* 40 CFR 33.202). "Ownership" is defined at 13 CFR 124.105 and "control" is defined at 13 CFR 124.106.

DBEs are certified for the SRF program through the Supplier Diversity Office using the federal Department of Transportation (DOT) DBE rules. EPA allows the use of DBEs certified under the DOT rules as long as they are also United States citizens. To ensure compliance with the EPA rule, MassDEP must verify United States citizenship through the completion of the following form for each DBE used on the project.

SRF Project Number _____

Contract Number _____

Contract Title _____

DBE Subcontractor _____

The undersigned, on behalf of the above named DBE subcontractor, hereby certifies that the DBE firm is either owned or controlled by a person or persons that are citizens of the United States.

_____
Printed Name and Title of DBE Signatory

_____
DBE Signature

_____
Date

DISADVANTABED BUSINESS ENTERPRISE PROGRAM
DBE SUBCONTRACTOR PARTICIPATION FORM

The United States Environmental Protection Agency (EPA) requires that this form be provided to all subcontractors on the project. At the option of the subcontractor, this form may be filled out and submitted directly to the EPA DBE Coordinator.

NAME OF SUBCONTRACTOR	PROJECT NAME
ADDRESS	CONTRACT NO.
TELEPHONE NO.	E-MAIL ADDRESS
PRIME CONTRACTOR NAME:	

Please use the space below to report any concerns regarding the above EPA-funded project (e.g., reason for termination by prime contractor, late payment, etc.).

_____

_____

_____

_____

_____

CONTRACT ITEM NO.	ITEM OF WORK OR DESCRIPTION OF SERVICES RECEIVED FROM THE PRIME CONTRACTOR	AMOUNT SUBCONTRACTOR WAS PAID BY PRIME CONTRACTOR

_____ _____

Subcontractor Signature Title/Date

Equivalent to EPA form 6100-2

REQUEST FOR WAIVER FOR SRF CONSTRUCTION

Upon exhausting all known sources and making every possible effort to meet the minimum requirements for DBE participation, the Bidder may seek relief either partially or entirely from these requirements by submitting a completed waiver package by the close of business on the third business day after notification by the LGU. Failure to comply with this process shall be cause to reject the bid thereby rendering the Bidder not eligible for award of the contract.

General Information

Project Title: _____ Project Location: _____

Bid Opening (time/date) _____

Bidder: _____

Mailing Address: _____

Contact Person: _____ Telephone No. ( ) _____ Ext. _____

Minimum Requirements

The bidder must demonstrate that good faith efforts were undertaken to comply with the percentage goals as specified. The firm seeking relief must show that such efforts were taken appropriately in advance of the time set for opening bid proposals to allow adequate time for response(s) by submitting the following:

A. A detailed record of the effort made to contact and negotiate with disadvantaged minority and/or woman owned businesses, including:

1. names, addresses, telephone numbers and contact dates of all such companies contacted;

2. copies of written notice(s) which were sent to DBE potential subcontractors prior to bid opening;

3. a detailed statement as to why each subcontractor contacted (i) was not willing to do the job or (ii) was not qualified to perform the work as solicited; and

4. in the case(s) where a negotiated price could not be reached the bidder should detail what efforts were made to reach an agreement on a competitive price.

5. copies of advertisements, dated not less than ten (10) days prior to bid opening, as appearing in general publications, trade-oriented publications, and applicable minority/women-focused media detailing the opportunities for participation;

B. MassDEP may require the bidder to produce such additional information as it deems appropriate.

C. No later than fifteen (15) days after submission of all required information and documentation, MassDEP shall make a determination, in writing, whether the waiver request is granted and shall provide that determination to the bidder and Awarding Authority. If the waiver request is denied, the facts upon which a denial is based will be set forth in writing.

CERTIFICATION

The undersigned herewith certifies that the above information and appropriate attachments are true and accurate to the best of my knowledge and that I have been authorized to act on behalf of the bidder in this matter.

_____ _____

(authorized original signature) DATE

DISADVANTAGED BUSINESS ENTERPRISE PARTICIPATION
MASSACHUSETTS DEPARTMENT OF ENVIRONMENTAL PROTECTION
DIVISION OF MUNICIPAL SERVICES

STATE REVOLVING FUND LOAN PROGRAM – SCHEDULE OF SUBCONTRACTOR PARTICIPATION

Local Governmental Unit _____

Project Name _____

SRF Identification Number _____

General Contractor _____

Contract Value _____

The United States Environmental Protection Agency (EPA) requires that all SRF borrowers develop and maintain a list of all MBE/WBE and non MBE/WBE subcontractors on the project.

This form must be completed and returned to MassDEP within 90 days of award of the contract.

Subcontractor	Point of Contact	Mailing Address	Telephone Number	E-Mail Address	MBE	WBE	DBE	Subcontract Value

THIS PAGE INTENTIONALLY LEFT BLANK

WEEKLY PAYROLL RECORDS REPORT
& STATEMENT OF COMPLIANCE

In accordance with Massachusetts General Law c. 149, §27B, a true and accurate record must be kept of all persons employed on the public works project for which the enclosed rates have been provided. A Payroll Form is available from the Department of Labor Standards (DLS) at www.mass.gov/dols/pw and includes all the information required to be kept by law. Every contractor or subcontractor is required to keep these records and preserve them for a period of three years from the date of completion of the contract.

On a weekly basis, every contractor and subcontractor is required to submit a certified copy of their weekly payroll records to the awarding authority; this includes the payroll forms and the Statement of Compliance form. The certified payroll records must be submitted either by regular mail or by e-mail to the awarding authority. Once collected, the awarding authority is required to preserve those records for three years from the date of completion of the project.

Each such contractor and subcontractor shall furnish weekly **and** within 15 days after completion of its portion of the work, to the awarding authority directly by first-class mail or e-mail, a statement, executed by the contractor, subcontractor or by any authorized officer thereof who supervised the payment of wages, this form, accompanied by their payroll:

STATEMENT OF COMPLIANCE

_____, 20_____

I,_____,_____
(Name of signatory party) (Title)

do hereby state:

That I pay or supervise the payment of the persons employed by _____ on the _____
(Contractor, subcontractor or public body) (Building or project)

and that all mechanics and apprentices, teamsters, chauffeurs and laborers employed on said project have been paid in accordance with wages determined under the provisions of sections twenty-six and twenty-seven of chapter one hundred and forty nine of the General Laws.

Signature _____
Title _____

MAURA HEALEY
Governor

KIM DRISCOLL
Lt. Governor

THE COMMONWEALTH OF MASSACHUSETTS
EXECUTIVE OFFICE OF LABOR AND WORKFORCE DEVELOPMENT
DEPARTMENT OF LABOR STANDARDS

Prevailing Wage Rates

As determined by the Director under the provisions of the Massachusetts General Laws, Chapter 149, Sections 26 to 27H

LAUREN JONES
Secretary

MICHAEL FLANAGAN
Director

Awarding Authority: Springfield Water and Sewer Commission

Contract Number: SWSC Bid No. 24-01 **City/Town:** WESTFIELD

Description of Work: Repairs to 42 Inch Pre-stressed concrete cylinder pipe, Replacement of existing manways, installation of manways, installation and replacement of vacuum release valves, installation of precast vaults.

Job Location: 1515 Granville Road, Westfield, MA

Information about Prevailing Wage Schedules for Awarding Authorities and Contractors

- **The wage rates will remain in effect for the duration of the project, except in the case of multi-year public construction projects. For construction projects lasting longer than one year, awarding authorities must request an updated wage schedule no later than two weeks before the anniversary of the date the contract was executed by the awarding authority and the general contractor.** For multi-year CM AT RISK projects, the awarding authority must request an annual update no later than two weeks before the anniversary date, determined as the earlier of: (a) the execution date of the GMP Amendment, or (b) the execution date of the first amendment to permit procurement of construction services. The annual update requirement is not applicable to 27F "rental of equipment" contracts. **The updated wage schedule must be provided to all contractors, including general and sub-contractors, working on the construction project.**
- This wage schedule applies only to the specific project referenced at the top of this page and uniquely identified by the "Wage Request Number" on all pages of this schedule.
- An Awarding Authority must request an updated wage schedule if it has not opened bids or selected a contractor within 90 days of the date of issuance of the wage schedule. For CM AT RISK projects (bid pursuant to G.L. c.149A), the earlier of: (a) the execution date of the GMP Amendment, or (b) the bid for the first construction scope of work must be within 90-days of the wage schedule issuance date.
- The wage schedule shall be incorporated in any advertisement or call for bids for the project as required by M.G.L. c. 149, § 27. The wage schedule shall be made a part of the contract awarded for the project. The wage schedule must be posted in a conspicuous place at the work site for the life of the project in accordance with M.G.L. c. 149 § 27. The wages listed on the wage schedule must be paid to employees performing construction work on the project whether they are employed by the prime contractor, a filed sub-bidder, or a sub-contractor.
- Apprentices working on the project are required to be registered with the Massachusetts Division of Apprentice Standards (DAS). Apprentices must keep their apprentice identification card on their persons during all work hours on the project. An apprentice registered with DAS may be paid the lower apprentice wage rate at the applicable step as provided on the prevailing wage schedule. **Any apprentice not registered with DAS regardless of whether they are registered with another federal, state, local, or private agency must be paid the journeyworker's rate.**
- Every contractor or subcontractor working on the construction project must submit weekly payroll reports and a Statement of Compliance directly to the awarding authority by mail or email and keep them on file for three years. Each weekly payroll report must contain: the employee's name, address, occupational classification, hours worked, and wages paid. Do not submit weekly payroll reports to DLS. For a sample payroll reporting form go to http://www.mass.gov/dols/pw.
- Contractors with questions about the wage rates or classifications included on the wage schedule have an affirmative obligation to inquire with DLS at (617) 626-6953.
- Contractors must obtain the wage schedules from awarding authorities. Failure of a contractor or subcontractor to pay the prevailing wage rates listed on the wage schedule to all employees who perform construction work on the project is a violation of the law and subjects the contractor or subcontractor to civil and criminal penalties.
- Employees not receiving the prevailing wage rate set forth on the wage schedule may file a complaint with the Fair Labor Division of the office of the Attorney General at (617) 727-3465.

Issue Date: 02/15/2024 **Wage Request Number:** 20240215-024

Classification	Effective Date	Base Wage	Health	Pension	Supplemental Unemployment	Total Rate
Construction						
(2 AXLE) DRIVER - EQUIPMENT *TEAMSTERS JOINT COUNCIL NO. 10 ZONE B*	01/01/2024	$38.95	$15.07	$18.67	$0.00	$72.69
	06/01/2024	$39.95	$15.07	$18.67	$0.00	$73.69
	12/01/2024	$39.95	$15.07	$20.17	$0.00	$75.19
	01/01/2025	$39.95	$15.57	$20.17	$0.00	$75.69
	06/01/2025	$40.95	$15.57	$20.17	$0.00	$76.69
	12/01/2025	$40.95	$15.57	$21.78	$0.00	$78.30
	01/01/2026	$40.95	$16.17	$21.78	$0.00	$78.90
	06/01/2026	$41.95	$16.17	$21.78	$0.00	$79.90
	12/01/2026	$41.95	$16.17	$23.52	$0.00	$81.64
	01/01/2027	$41.95	$16.77	$23.52	$0.00	$82.24
(3 AXLE) DRIVER - EQUIPMENT *TEAMSTERS JOINT COUNCIL NO. 10 ZONE B*	01/01/2024	$39.02	$15.07	$18.67	$0.00	$72.76
	06/01/2024	$40.02	$15.07	$18.67	$0.00	$73.76
	12/01/2024	$40.02	$15.07	$20.17	$0.00	$75.26
	01/01/2025	$40.02	$15.57	$20.17	$0.00	$75.76
	06/01/2025	$41.02	$15.57	$20.17	$0.00	$76.76
	12/01/2025	$41.02	$15.57	$21.78	$0.00	$78.37
	01/01/2026	$41.02	$16.17	$21.78	$0.00	$78.97
	06/01/2026	$42.02	$16.17	$21.78	$0.00	$79.97
	12/01/2026	$42.02	$16.17	$23.52	$0.00	$81.71
	01/01/2027	$42.02	$16.77	$23.52	$0.00	$82.31
(4 & 5 AXLE) DRIVER - EQUIPMENT *TEAMSTERS JOINT COUNCIL NO. 10 ZONE B*	01/01/2024	$39.14	$15.07	$18.67	$0.00	$72.88
	06/01/2024	$40.14	$15.07	$18.67	$0.00	$73.88
	12/01/2024	$40.14	$15.07	$20.17	$0.00	$75.38
	01/01/2025	$40.14	$15.57	$20.17	$0.00	$75.88
	06/01/2025	$41.14	$15.57	$20.17	$0.00	$76.88
	12/01/2025	$41.14	$15.57	$21.78	$0.00	$78.49
	01/01/2026	$41.14	$16.17	$21.78	$0.00	$79.09
	06/01/2026	$42.14	$16.17	$21.78	$0.00	$80.09
	12/01/2026	$42.14	$16.17	$23.52	$0.00	$81.83
	01/01/2027	$42.14	$16.77	$23.52	$0.00	$82.43
ADS/SUBMERSIBLE PILOT *PILE DRIVER LOCAL 56 (ZONE 3)*	08/01/2020	$103.05	$9.40	$23.12	$0.00	$135.57
For apprentice rates see "Apprentice- PILE DRIVER"						
AIR TRACK OPERATOR *LABORERS - ZONE 3 (BUILDING & SITE)*	12/01/2023	$34.38	$9.65	$16.84	$0.00	$60.87
For apprentice rates see "Apprentice- LABORER"						
AIR TRACK OPERATOR (HEAVY & HIGHWAY) *LABORERS - ZONE 3 (HEAVY & HIGHWAY)*	12/01/2023	$34.38	$9.65	$14.78	$0.00	$58.81
	06/01/2024	$35.58	$9.65	$14.78	$0.00	$60.01
	12/01/2024	$36.78	$9.65	$14.78	$0.00	$61.21
	06/01/2025	$38.03	$9.65	$14.78	$0.00	$62.46
	12/01/2025	$39.27	$9.65	$14.78	$0.00	$63.70
	06/01/2026	$40.57	$9.65	$14.78	$0.00	$65.00
	12/01/2026	$41.86	$9.65	$14.78	$0.00	$66.29
For apprentice rates see "Apprentice- LABORER (Heavy and Highway)"						

Classification	Effective Date	Base Wage	Health	Pension	Supplemental Unemployment	Total Rate
ASBESTOS WORKER (PIPES & TANKS) *HEAT & FROST INSULATORS LOCAL 6 (SPRINGFIELD)*	12/01/2023	$36.72	$14.50	$10.55	$0.00	$61.77
	06/01/2024	$37.62	$14.50	$10.55	$0.00	$62.67
	12/01/2024	$38.52	$14.50	$10.55	$0.00	$63.57
	06/01/2025	$39.42	$14.50	$10.55	$0.00	$64.47
	12/01/2025	$40.32	$14.50	$10.55	$0.00	$65.37
ASPHALT RAKER *LABORERS - ZONE 3 (BUILDING & SITE)*	12/01/2023	$33.88	$9.65	$16.84	$0.00	$60.37
For apprentice rates see "Apprentice- LABORER"						
ASPHALT RAKER (HEAVY & HIGHWAY) *LABORERS - ZONE 3 (HEAVY & HIGHWAY)*	12/01/2023	$33.88	$9.65	$14.78	$0.00	$58.31
	06/01/2024	$35.08	$9.65	$14.78	$0.00	$59.51
	12/01/2024	$36.28	$9.65	$14.78	$0.00	$60.71
	06/01/2025	$37.53	$9.65	$14.78	$0.00	$61.96
	12/01/2025	$38.77	$9.65	$14.78	$0.00	$63.20
	06/01/2026	$40.07	$9.65	$14.78	$0.00	$64.50
	12/01/2026	$41.36	$9.65	$14.78	$0.00	$65.79
For apprentice rates see "Apprentice- LABORER (Heavy and Highway)"						
AUTOMATIC GRADER-EXCAVATOR (RECLAIMER) *OPERATING ENGINEERS LOCAL 98*	12/01/2023	$39.56	$13.78	$15.15	$0.00	$68.49
For apprentice rates see "Apprentice- OPERATING ENGINEERS"						
BACKHOE/FRONT-END LOADER OPERATOR *OPERATING ENGINEERS LOCAL 98*	12/01/2023	$39.56	$13.78	$15.15	$0.00	$68.49
For apprentice rates see "Apprentice- OPERATING ENGINEERS"						
BARCO-TYPE JUMPING TAMPER *LABORERS - ZONE 3 (BUILDING & SITE)*	12/01/2023	$33.88	$9.65	$16.84	$0.00	$60.37
For apprentice rates see "Apprentice- LABORER"						
BATCH/CEMENT PLANT - ON SITE *OPERATING ENGINEERS LOCAL 98*	12/01/2023	$39.03	$13.38	$15.15	$0.00	$67.56
For apprentice rates see "Apprentice- OPERATING ENGINEERS"						
BLOCK PAVER, RAMMER / CURB SETTER *LABORERS - ZONE 3 (BUILDING & SITE)*	12/01/2023	$34.38	$9.65	$16.84	$0.00	$60.87
For apprentice rates see "Apprentice- LABORER"						
BLOCK PAVER, RAMMER / CURB SETTER (HEAVY & HIGHWAY) *LABORERS - ZONE 3 (HEAVY & HIGHWAY)*	12/01/2023	$34.38	$9.65	$14.78	$0.00	$58.81
	06/01/2024	$35.58	$9.65	$14.78	$0.00	$60.01
	12/01/2024	$36.78	$9.65	$14.78	$0.00	$61.21
	06/01/2025	$38.03	$9.65	$14.78	$0.00	$62.46
	12/01/2025	$39.27	$9.65	$14.78	$0.00	$63.70
	06/01/2026	$40.57	$9.65	$14.78	$0.00	$65.00
	12/01/2026	$41.86	$9.65	$14.78	$0.00	$66.29
For apprentice rates see "Apprentice- LABORER (Heavy and Highway)"						
BOILER MAKER *BOILERMAKERS LOCAL 29*	01/01/2024	$48.12	$7.07	$20.60	$0.00	$75.79

Classification	Effective Date	Base Wage	Health	Pension	Supplemental Unemployment	Total Rate

Apprentice - *BOILERMAKER - Local 29*

Effective Date - 01/01/2024

Step	percent	Apprentice Base Wage	Health	Pension	Supplemental Unemployment	Total Rate
1	65	$31.28	$7.07	$13.22	$0.00	$51.57
2	65	$31.28	$7.07	$13.22	$0.00	$51.57
3	70	$33.68	$7.07	$14.23	$0.00	$54.98
4	75	$36.09	$7.07	$15.24	$0.00	$58.40
5	80	$38.50	$7.07	$16.25	$0.00	$61.82
6	85	$40.90	$7.07	$17.28	$0.00	$65.25
7	90	$43.31	$7.07	$18.28	$0.00	$68.66
8	95	$45.71	$7.07	$19.32	$0.00	$72.10

Notes:

Apprentice to Journeyworker Ratio:1:4

BRICK/STONE/ARTIFICIAL MASONRY (INCL. MASONRY WATERPROOFING) *BRICKLAYERS LOCAL 3 (SPRINGFIELD/PITTSFIELD)*	02/01/2024	$50.81	$11.49	$21.46	$0.00	$83.76
	08/01/2024	$52.06	$11.49	$21.46	$0.00	$85.01
	02/01/2025	$53.36	$11.49	$21.46	$0.00	$86.31
	08/01/2025	$55.51	$11.49	$21.46	$0.00	$88.46
	02/01/2026	$56.86	$11.49	$21.46	$0.00	$89.81
	08/01/2026	$59.06	$11.49	$21.46	$0.00	$92.01
	02/01/2027	$60.46	$11.49	$21.46	$0.00	$93.41

Classification	Effective Date	Base Wage	Health	Pension	Supplemental Unemployment	Total Rate

Apprentice - *BRICK/PLASTER/CEMENT MASON - Local 3 Springfield/Pittsfield*

Effective Date - 02/01/2024

Step	percent	Apprentice Base Wage	Health	Pension	Supplemental Unemployment	Total Rate
1	50	$25.41	$11.49	$21.46	$0.00	$58.36
2	60	$30.49	$11.49	$21.46	$0.00	$63.44
3	70	$35.57	$11.49	$21.46	$0.00	$68.52
4	80	$40.65	$11.49	$21.46	$0.00	$73.60
5	90	$45.73	$11.49	$21.46	$0.00	$78.68

Effective Date - 08/01/2024

Step	percent	Apprentice Base Wage	Health	Pension	Supplemental Unemployment	Total Rate
1	50	$26.03	$11.49	$21.46	$0.00	$58.98
2	60	$31.24	$11.49	$21.46	$0.00	$64.19
3	70	$36.44	$11.49	$21.46	$0.00	$69.39
4	80	$41.65	$11.49	$21.46	$0.00	$74.60
5	90	$46.85	$11.49	$21.46	$0.00	$79.80

Notes:

Apprentice to Journeyworker Ratio:1:5

BULLDOZER/POWER SHOVEL/TREE SHREDDER /CLAM SHELL*OPERATING*	12/01/2023	$39.56	$13.78	$15.15	$0.00	$68.49
ENGINEERS LOCAL 98						
For apprentice rates see "Apprentice- OPERATING ENGINEERS"						
CAISSON & UNDERPINNING BOTTOM MAN	12/01/2023	$45.48	$9.65	$18.22	$0.00	$73.35
LABORERS - FOUNDATION AND MARINE	06/01/2024	$46.96	$9.65	$18.22	$0.00	$74.83
	12/01/2024	$48.43	$9.65	$18.22	$0.00	$76.30
	06/01/2025	$49.93	$9.65	$18.22	$0.00	$77.80
	12/01/2025	$51.43	$9.65	$18.22	$0.00	$79.30
	06/01/2026	$52.98	$9.65	$18.22	$0.00	$80.85
	12/01/2026	$54.48	$9.65	$18.22	$0.00	$82.35
For apprentice rates see "Apprentice- LABORER"						
CAISSON & UNDERPINNING LABORER	12/01/2023	$44.33	$9.65	$18.22	$0.00	$72.20
LABORERS - FOUNDATION AND MARINE	06/01/2024	$45.81	$9.65	$18.22	$0.00	$73.68
	12/01/2024	$47.28	$9.65	$18.22	$0.00	$75.15
	06/01/2025	$48.78	$9.65	$18.22	$0.00	$76.65
	12/01/2025	$50.28	$9.65	$18.22	$0.00	$78.15
	06/01/2026	$51.83	$9.65	$18.22	$0.00	$79.70
	12/01/2026	$53.33	$9.65	$18.22	$0.00	$81.20
For apprentice rates see "Apprentice- LABORER"						

Classification	Effective Date	Base Wage	Health	Pension	Supplemental Unemployment	Total Rate
CAISSON & UNDERPINNING TOP MAN *LABORERS - FOUNDATION AND MARINE*	12/01/2023	$44.33	$9.65	$18.22	$0.00	$72.20
	06/01/2024	$45.81	$9.65	$18.22	$0.00	$73.68
	12/01/2024	$47.28	$9.65	$18.22	$0.00	$75.15
	06/01/2025	$48.78	$9.65	$18.22	$0.00	$76.65
	12/01/2025	$50.28	$9.65	$18.22	$0.00	$78.15
	06/01/2026	$51.83	$9.65	$18.22	$0.00	$79.70
	12/01/2026	$53.33	$9.65	$18.22	$0.00	$81.20
For apprentice rates see "Apprentice- LABORER"						
CARBIDE CORE DRILL OPERATOR *LABORERS - ZONE 3 (BUILDING & SITE)*	12/01/2023	$33.88	$9.65	$16.84	$0.00	$60.37
For apprentice rates see "Apprentice- LABORER"						
CARPENTER *CARPENTERS LOCAL 336 - HAMPDEN HAMPSHIRE FRANKLIN*	09/01/2023	$40.51	$7.91	$18.15	$0.00	$66.57
	03/01/2024	$41.41	$7.91	$18.15	$0.00	$67.47
	09/01/2024	$42.36	$7.91	$18.15	$0.00	$68.42
	03/01/2025	$43.26	$7.91	$18.15	$0.00	$69.32
	09/01/2025	$44.21	$7.91	$18.15	$0.00	$70.27
	03/01/2026	$45.11	$7.91	$18.15	$0.00	$71.17
	09/01/2026	$46.06	$7.91	$18.15	$0.00	$72.12
	03/01/2027	$46.96	$7.91	$18.15	$0.00	$73.02

Classification	Effective Date	Base Wage	Health	Pension	Supplemental Unemployment	Total Rate

Apprentice - *CARPENTER - Local 336 Hampden Hampshire Franklin*

Effective Date - 09/01/2023

Step	percent	Apprentice Base Wage	Health	Pension	Supplemental Unemployment	Total Rate
1	50	$20.26	$7.91	$1.38	$0.00	$29.55
2	60	$24.31	$7.91	$1.38	$0.00	$33.60
3	70	$28.36	$7.91	$13.95	$0.00	$50.22
4	75	$30.38	$7.91	$13.95	$0.00	$52.24
5	80	$32.41	$7.91	$15.35	$0.00	$55.67
6	80	$32.41	$7.91	$15.35	$0.00	$55.67
7	90	$36.46	$7.91	$16.75	$0.00	$61.12
8	90	$36.46	$7.91	$16.75	$0.00	$61.12

Effective Date - 03/01/2024

Step	percent	Apprentice Base Wage	Health	Pension	Supplemental Unemployment	Total Rate
1	50	$20.71	$7.91	$1.38	$0.00	$30.00
2	60	$24.85	$7.91	$1.38	$0.00	$34.14
3	70	$28.99	$7.91	$13.95	$0.00	$50.85
4	75	$31.06	$7.91	$13.95	$0.00	$52.92
5	80	$33.13	$7.91	$15.35	$0.00	$56.39
6	80	$33.13	$7.91	$15.35	$0.00	$56.39
7	90	$37.27	$7.91	$16.75	$0.00	$61.93
8	90	$37.27	$7.91	$16.75	$0.00	$61.93

Notes:

% Indentured After 10/1/17; 45/45/55/55/70/70/80/80
Step 1&2 $26.46/ 3&4 $31.82/ 5&6 $50.38/ 7&8 $55.77

Apprentice to Journeyworker Ratio:1:5

CARPENTER WOOD FRAME *CARPENTERS-ZONE 3 (Wood Frame)*	10/01/2023	$25.55	$7.02	$4.80	$0.00	$37.37
	10/01/2024	$26.65	$7.02	$4.80	$0.00	$38.47
	10/01/2025	$27.75	$7.02	$4.80	$0.00	$39.57
	10/01/2026	$28.85	$7.02	$4.80	$0.00	$40.67

All Aspects of New Wood Frame Work

Apprentice - *CARPENTER (Wood Frame) - Zone 3*

Effective Date - 10/01/2023

Step	percent	Apprentice Base Wage	Health	Pension	Supplemental Unemployment	Total Rate
1	60	$15.33	$7.02	$0.00	$0.00	$22.35
2	60	$15.33	$7.02	$0.00	$0.00	$22.35
3	65	$16.61	$7.02	$1.00	$0.00	$24.63
4	70	$17.89	$7.02	$1.00	$0.00	$25.91
5	75	$19.16	$7.02	$4.80	$0.00	$30.98
6	80	$20.44	$7.02	$4.80	$0.00	$32.26
7	85	$21.72	$7.02	$4.80	$0.00	$33.54
8	90	$23.00	$7.02	$4.80	$0.00	$34.82

Effective Date - 10/01/2024

Step	percent	Apprentice Base Wage	Health	Pension	Supplemental Unemployment	Total Rate
1	60	$15.99	$7.02	$0.00	$0.00	$23.01
2	60	$15.99	$7.02	$0.00	$0.00	$23.01
3	65	$17.32	$7.02	$1.00	$0.00	$25.34
4	70	$18.66	$7.02	$1.00	$0.00	$26.68
5	75	$19.99	$7.02	$4.80	$0.00	$31.81
6	80	$21.32	$7.02	$4.80	$0.00	$33.14
7	85	$22.65	$7.02	$4.80	$0.00	$34.47
8	90	$23.99	$7.02	$4.80	$0.00	$35.81

Notes:

% Indentured After 10/1/17; 45/45/55/55/70/70/80/80
Step 1&2 $18.52/ 3&4 $21.07/ 5&6 $28.70/ 7&8 $31.26

Apprentice to Journeyworker Ratio:1:5

CEMENT MASONRY/PLASTERING *BRICKLAYERS LOCAL 3 (SPRINGFIELD/PITTSFIELD)*	01/01/2024	$44.68	$12.90	$18.66	$1.25	$77.49

Apprentice - *CEMENT MASONRY/PLASTERING - Springfield/Pittsfield*

Effective Date - 01/01/2024

Step	percent	Apprentice Base Wage	Health	Pension	Supplemental Unemployment	Total Rate
1	50	$22.34	$12.90	$15.86	$0.00	$51.10
2	60	$26.81	$12.90	$18.66	$1.25	$59.62
3	65	$29.04	$12.90	$18.66	$1.25	$61.85
4	70	$31.28	$12.90	$18.66	$1.25	$64.09
5	75	$33.51	$12.90	$18.66	$1.25	$66.32
6	80	$35.74	$12.90	$18.66	$1.25	$68.55
7	90	$40.21	$12.90	$18.66	$1.25	$73.02

Notes:

Steps 3,4 are 500 hrs. All other steps are 1,000 hrs.

Apprentice to Journeyworker Ratio:1:3

Classification	Effective Date	Base Wage	Health	Pension	Supplemental Unemployment	Total Rate
CHAIN SAW OPERATOR *LABORERS - ZONE 3 (BUILDING & SITE)* For apprentice rates see "Apprentice- LABORER"	12/01/2023	$33.88	$9.65	$16.84	$0.00	$60.37
COMPRESSOR OPERATOR *OPERATING ENGINEERS LOCAL 98* For apprentice rates see "Apprentice- OPERATING ENGINEERS"	12/01/2023	$39.03	$13.38	$15.15	$0.00	$67.56
CRANE OPERATOR *OPERATING ENGINEERS LOCAL 98* For apprentice rates see "Apprentice- OPERATING ENGINEERS"	12/01/2023	$43.06	$13.78	$15.15	$0.00	$71.99
DELEADER (BRIDGE) *PAINTERS LOCAL 35 - ZONE 3*	01/01/2024	$56.06	$9.95	$23.95	$0.00	$89.96
	07/01/2024	$57.26	$9.95	$23.95	$0.00	$91.16
	01/01/2025	$58.46	$9.95	$23.95	$0.00	$92.36

Apprentice - *PAINTER Local 35 - BRIDGES/TANKS*

Effective Date - 01/01/2024

Step	percent	Apprentice Base Wage	Health	Pension	Supplemental Unemployment	Total Rate
1	50	$28.03	$9.95	$0.00	$0.00	$37.98
2	55	$30.83	$9.95	$6.66	$0.00	$47.44
3	60	$33.64	$9.95	$7.26	$0.00	$50.85
4	65	$36.44	$9.95	$7.87	$0.00	$54.26
5	70	$39.24	$9.95	$20.32	$0.00	$69.51
6	75	$42.05	$9.95	$20.93	$0.00	$72.93
7	80	$44.85	$9.95	$21.53	$0.00	$76.33
8	90	$50.45	$9.95	$22.74	$0.00	$83.14

Effective Date - 07/01/2024

Step	percent	Apprentice Base Wage	Health	Pension	Supplemental Unemployment	Total Rate
1	50	$28.63	$9.95	$0.00	$0.00	$38.58
2	55	$31.49	$9.95	$6.66	$0.00	$48.10
3	60	$34.36	$9.95	$7.26	$0.00	$51.57
4	65	$37.22	$9.95	$7.87	$0.00	$55.04
5	70	$40.08	$9.95	$20.32	$0.00	$70.35
6	75	$42.95	$9.95	$20.93	$0.00	$73.83
7	80	$45.81	$9.95	$21.53	$0.00	$77.29
8	90	$51.53	$9.95	$22.74	$0.00	$84.22

Notes:
Steps are 750 hrs.

Apprentice to Journeyworker Ratio:1:1

DEMO: ADZEMAN *LABORERS - ZONE 3 (BUILDING & SITE)* For apprentice rates see "Apprentice- LABORER"	12/01/2023	$44.98	$9.40	$17.82	$0.00	$72.20
DEMO: BACKHOE/LOADER/HAMMER OPERATOR *LABORERS - ZONE 3 (BUILDING & SITE)* For apprentice rates see "Apprentice- LABORER"	12/01/2023	$45.48	$9.65	$18.07	$0.00	$73.20
DEMO: BURNERS *LABORERS - ZONE 3 (BUILDING & SITE)*	12/01/2023	$45.73	$9.40	$17.82	$0.00	$72.95

Classification	Effective Date	Base Wage	Health	Pension	Supplemental Unemployment	Total Rate
For apprentice rates see "Apprentice- LABORER"						
DEMO: CONCRETE CUTTER/SAWYER *LABORERS - ZONE 3 (BUILDING & SITE)*	12/01/2023	$45.48	$9.65	$18.07	$0.00	$73.20
For apprentice rates see "Apprentice- LABORER"						
DEMO: JACKHAMMER OPERATOR *LABORERS - ZONE 3 (BUILDING & SITE)*	12/01/2023	$45.73	$9.40	$17.82	$0.00	$72.95
For apprentice rates see "Apprentice- LABORER"						
DEMO: WRECKING LABORER *LABORERS - ZONE 3 (BUILDING & SITE)*	12/01/2023	$44.98	$9.40	$17.82	$0.00	$72.20
For apprentice rates see "Apprentice- LABORER"						
DIVER *PILE DRIVER LOCAL 56 (ZONE 3)*	08/01/2020	$68.70	$9.40	$23.12	$0.00	$101.22
For apprentice rates see "Apprentice- PILE DRIVER"						
DIVER TENDER *PILE DRIVER LOCAL 56 (ZONE 3)*	08/01/2020	$49.07	$9.40	$23.12	$0.00	$81.59
For apprentice rates see "Apprentice- PILE DRIVER"						
DIVER TENDER (EFFLUENT) *PILE DRIVER LOCAL 56 (ZONE 3)*	08/01/2020	$73.60	$9.40	$23.12	$0.00	$106.12
For apprentice rates see "Apprentice- PILE DRIVER"						
DIVER/SLURRY (EFFLUENT) *PILE DRIVER LOCAL 56 (ZONE 3)*	08/01/2020	$103.05	$9.40	$23.12	$0.00	$135.57
For apprentice rates see "Apprentice- PILE DRIVER"						
DRAWBRIDGE OPERATOR (Construction) *DRAWBRIDGE - SEIU LOCAL 888*	07/01/2020	$26.77	$6.67	$3.93	$0.16	$37.53
ELECTRICIAN (Including Core Drilling) *ELECTRICIANS LOCAL 7*	12/31/2023	$49.01	$12.75	$14.61	$0.00	$76.37
	06/30/2024	$50.01	$13.00	$14.86	$0.00	$77.87
	12/29/2024	$51.06	$13.25	$15.06	$0.00	$79.37
	06/29/2025	$52.16	$13.50	$15.21	$0.00	$80.87
	12/28/2025	$53.26	$13.75	$15.36	$0.00	$82.37
	06/28/2026	$54.41	$14.00	$15.46	$0.00	$83.87
	01/03/2027	$55.56	$14.25	$15.56	$0.00	$85.37

Classification	Effective Date	Base Wage	Health	Pension	Supplemental Unemployment	Total Rate

Apprentice - *ELECTRICIAN - Local 7*

Effective Date - 12/31/2023

Step	percent	Apprentice Base Wage	Health	Pension	Supplemental Unemployment	Total Rate
1	40	$19.60	$7.65	$0.59	$0.00	$27.84
2	45	$22.05	$7.65	$0.66	$0.00	$30.36
3	50	$24.51	$12.75	$7.34	$0.00	$44.60
4	55	$26.96	$12.75	$7.41	$0.00	$47.12
5	65	$31.86	$12.75	$9.52	$0.00	$54.13
6	70	$34.31	$12.75	$10.90	$0.00	$57.96

Effective Date - 06/30/2024

Step	percent	Apprentice Base Wage	Health	Pension	Supplemental Unemployment	Total Rate
1	40	$20.00	$7.80	$0.60	$0.00	$28.40
2	45	$22.50	$7.80	$0.68	$0.00	$30.98
3	50	$25.01	$13.00	$7.40	$0.00	$45.41
4	55	$27.51	$13.00	$7.48	$0.00	$47.99
5	65	$32.51	$13.00	$9.64	$0.00	$55.15
6	70	$35.01	$13.00	$11.06	$0.00	$59.07

Notes:

Steps 1-2 are 1000 hrs; Steps 3-6 are 1500 hrs.

Apprentice to Journeyworker Ratio:2:3****

ELEVATOR CONSTRUCTOR *ELEVATOR CONSTRUCTORS LOCAL 41*	01/01/2024	$61.98	$16.18	$20.96	$0.00	$99.12
	01/01/2025	$62.83	$16.28	$21.36	$0.00	$100.47
	01/01/2026	$63.68	$16.38	$21.76	$0.00	$101.82
	01/01/2027	$64.53	$16.48	$22.16	$0.00	$103.17

Apprentice - *ELEVATOR CONSTRUCTOR - Local 41*

Effective Date - 01/01/2024

Step	percent	Apprentice Base Wage	Health	Pension	Supplemental Unemployment	Total Rate
1	50	$30.99	$16.18	$0.00	$0.00	$47.17
2	55	$34.09	$16.18	$20.96	$0.00	$71.23
3	65	$40.29	$16.18	$20.96	$0.00	$77.43
4	70	$43.39	$16.18	$20.96	$0.00	$80.53
5	80	$49.58	$16.18	$20.96	$0.00	$86.72

Effective Date - 01/01/2025

Step	percent	Apprentice Base Wage	Health	Pension	Supplemental Unemployment	Total Rate
1	50	$31.42	$16.28	$0.00	$0.00	$47.70
2	55	$34.56	$16.28	$21.36	$0.00	$72.20
3	65	$40.84	$16.28	$21.36	$0.00	$78.48
4	70	$43.98	$16.28	$21.36	$0.00	$81.62
5	80	$50.26	$16.28	$21.36	$0.00	$87.90

Notes:
Steps 1-2 are 6 mos.; Steps 3-5 are 1 year

Apprentice to Journeyworker Ratio:1:1

ELEVATOR CONSTRUCTOR HELPER *ELEVATOR CONSTRUCTORS LOCAL 41*	01/01/2024	$43.39	$16.18	$20.96	$0.00	$80.53
	01/01/2025	$43.98	$16.28	$21.36	$0.00	$81.62
	01/01/2026	$44.58	$16.38	$21.76	$0.00	$82.72
	01/01/2027	$45.17	$16.48	$22.16	$0.00	$83.81
For apprentice rates see "Apprentice - ELEVATOR CONSTRUCTOR"						
FENCE & GUARD RAIL ERECTOR (HEAVY & HIGHWAY) *LABORERS - ZONE 3 (HEAVY & HIGHWAY)*	12/01/2023	$33.88	$9.65	$14.78	$0.00	$58.31
	06/01/2024	$35.08	$9.65	$14.78	$0.00	$59.51
	12/01/2024	$36.28	$9.65	$14.78	$0.00	$60.71
	06/01/2025	$37.53	$9.65	$14.78	$0.00	$61.96
	12/01/2025	$38.77	$9.65	$14.78	$0.00	$63.20
	06/01/2026	$40.07	$9.65	$14.78	$0.00	$64.50
	12/01/2026	$41.36	$9.65	$14.78	$0.00	$65.79
For apprentice rates see "Apprentice- LABORER (Heavy and Highway)"						
FIELD ENG.INST/ROD-BLDG,SITE,HVY/HWY *OPERATING ENGINEERS LOCAL 98*	06/01/1999	$18.84	$4.80	$4.10	$0.00	$27.74
FIELD ENG.PARTY CHIEF:BLDG,SITE,HVY/HWY *OPERATING ENGINEERS LOCAL 98*	06/01/1999	$21.33	$4.80	$4.10	$0.00	$30.23
FIELD ENG.SURVEY CHIEF-BLDG,SITE,HVY/HWY *OPERATING ENGINEERS LOCAL 98*	06/01/1999	$22.33	$4.80	$4.10	$0.00	$31.23

Classification	Effective Date	Base Wage	Health	Pension	Supplemental Unemployment	Total Rate
FIRE ALARM INSTALLER *ELECTRICIANS LOCAL 7*	12/31/2023	$49.01	$12.75	$14.61	$0.00	$76.37
	06/30/2024	$50.01	$13.00	$14.86	$0.00	$77.87
	12/29/2024	$51.06	$13.25	$15.06	$0.00	$79.37
	06/29/2025	$52.16	$13.50	$15.21	$0.00	$80.87
	12/28/2025	$53.26	$13.75	$15.36	$0.00	$82.37
	06/28/2026	$54.41	$14.00	$15.46	$0.00	$83.87
	01/03/2027	$55.56	$14.25	$15.56	$0.00	$85.37
For apprentice rates see "Apprentice- ELECTRICIAN"						
FIRE ALARM REPAIR / MAINTENANCE / COMMISSIONING*ELECTRICIANS LOCAL 7*	12/31/2023	$49.01	$12.75	$14.61	$0.00	$76.37
	06/30/2024	$50.01	$13.00	$14.86	$0.00	$77.87
	12/29/2024	$51.06	$13.25	$15.06	$0.00	$79.37
	06/29/2025	$52.16	$13.50	$15.21	$0.00	$80.87
	12/28/2025	$53.26	$13.75	$15.36	$0.00	$82.37
	06/28/2026	$54.41	$14.00	$15.46	$0.00	$83.87
	01/03/2027	$55.56	$14.25	$15.56	$0.00	$85.37
For apprentice rates see "Apprentice- TELECOMMUNICATIONS TECHNICIAN"						
FIREMAN *OPERATING ENGINEERS LOCAL 98*	12/01/2023	$39.03	$13.38	$15.15	$0.00	$67.56

Apprentice - *OPERATING ENGINEERS - Local 98 Class 3*

Effective Date - 12/01/2023

Step	percent	Apprentice Base Wage	Health	Pension	Supplemental Unemployment	Total Rate
1	60	$23.42	$13.38	$15.15	$0.00	$51.95
2	70	$27.32	$13.38	$15.15	$0.00	$55.85
3	80	$31.22	$13.38	$15.15	$0.00	$59.75
4	90	$35.13	$13.38	$15.15	$0.00	$63.66

Notes:

Steps 1-2 are 1000 hrs.; Steps 3-4 are 2000 hrs.

Apprentice to Journeyworker Ratio:1:6

FLAGGER & SIGNALER (HEAVY & HIGHWAY) *LABORERS - ZONE 3 (HEAVY & HIGHWAY)*	12/01/2023	$25.48	$9.65	$14.66	$0.00	$49.79
	06/01/2024	$26.51	$9.65	$14.66	$0.00	$50.82
	12/01/2024	$26.51	$9.65	$14.66	$0.00	$50.82
	06/01/2025	$27.59	$9.65	$14.66	$0.00	$51.90
	12/01/2025	$27.59	$9.65	$14.66	$0.00	$51.90
	06/01/2026	$28.71	$9.65	$14.66	$0.00	$53.02
	12/01/2026	$28.71	$9.65	$14.66	$0.00	$53.02
For apprentice rates see "Apprentice- LABORER (Heavy and Highway)"						
FLOORCOVERER *FLOORCOVERERS LOCAL 2168 ZONE III*	03/01/2023	$40.07	$7.31	$18.15	$0.00	$65.53

Apprentice - *FLOORCOVERER - Local 2168 Zone III*

Effective Date - 03/01/2023

Step	percent	Apprentice Base Wage	Health	Pension	Supplemental Unemployment	Total Rate
1	50	$20.04	$7.31	$1.38	$0.00	$28.73
2	55	$22.04	$7.31	$1.38	$0.00	$30.73
3	60	$24.04	$7.31	$2.76	$0.00	$34.11
4	65	$26.05	$7.31	$2.76	$0.00	$36.12
5	70	$28.05	$7.31	$15.39	$0.00	$50.75
6	75	$30.05	$7.31	$15.39	$0.00	$52.75
7	80	$32.06	$7.31	$16.77	$0.00	$56.14
8	85	$34.06	$7.31	$16.77	$0.00	$58.14

Notes: Steps are 750 hrs.
% After 10/1/17; 45/45/55/55/70/70/80/80 (1500hr Steps)
Step 1&2 $26.72.24/ 3&4 $32.11/ 5&6 $50.75/ 7&8 $56.14

Apprentice to Journeyworker Ratio:1:1

FORK LIFT *OPERATING ENGINEERS LOCAL 98*	12/01/2023	$39.25	$13.78	$15.15	$0.00	$68.18

For apprentice rates see "Apprentice- OPERATING ENGINEERS"

GENERATORS/LIGHTING PLANTS *OPERATING ENGINEERS LOCAL 98*	12/01/2023	$35.80	$13.78	$15.15	$0.00	$64.73

For apprentice rates see "Apprentice- OPERATING ENGINEERS"

GLAZIER (GLASS PLANK/AIR BARRIER/INTERIOR SYSTEMS) *GLAZIERS LOCAL 1333*	06/01/2020	$39.18	$10.80	$10.45	$0.00	$60.43

Apprentice - *GLAZIER - Local 1333*

Effective Date - 06/01/2020

Step	percent	Apprentice Base Wage	Health	Pension	Supplemental Unemployment	Total Rate
1	50	$19.59	$10.80	$1.80	$0.00	$32.19
2	56	$22.04	$10.80	$1.80	$0.00	$34.64
3	63	$24.49	$10.80	$2.45	$0.00	$37.74
4	69	$26.94	$10.80	$2.45	$0.00	$40.19
5	75	$29.39	$10.80	$3.15	$0.00	$43.34
6	81	$31.83	$10.80	$3.15	$0.00	$45.78
7	88	$34.28	$10.80	$10.45	$0.00	$55.53
8	94	$36.73	$10.80	$10.45	$0.00	$57.98

Notes:

Apprentice to Journeyworker Ratio:1:3

GRADER/TRENCHING MACHINE/DERRICK *OPERATING ENGINEERS LOCAL 98*	12/01/2023	$39.56	$13.78	$15.15	$0.00	$68.49

For apprentice rates see "Apprentice- OPERATING ENGINEERS"

Classification	Effective Date	Base Wage	Health	Pension	Supplemental Unemployment	Total Rate
HVAC (DUCTWORK) *SHEETMETAL WORKERS LOCAL 63*	01/01/2024	$43.80	$10.64	$17.54	$2.05	$74.03
	07/01/2024	$45.05	$10.64	$17.54	$2.05	$75.28
	01/01/2025	$46.30	$10.64	$17.54	$2.05	$76.53
For apprentice rates see "Apprentice- SHEET METAL WORKER"						
HVAC (ELECTRICAL CONTROLS) *ELECTRICIANS LOCAL 7*	12/31/2023	$49.01	$12.75	$14.61	$0.00	$76.37
	06/30/2024	$50.01	$13.00	$14.86	$0.00	$77.87
	12/29/2024	$51.06	$13.25	$15.06	$0.00	$79.37
	06/29/2025	$52.16	$13.50	$15.21	$0.00	$80.87
	12/28/2025	$53.26	$13.75	$15.36	$0.00	$82.37
	06/28/2026	$54.41	$14.00	$15.46	$0.00	$83.87
	01/03/2027	$55.56	$14.25	$15.56	$0.00	$85.37
For apprentice rates see "Apprentice- ELECTRICIAN"						
HVAC (TESTING AND BALANCING - AIR) *SHEETMETAL WORKERS LOCAL 63*	01/01/2024	$43.80	$10.64	$17.54	$2.05	$74.03
	07/01/2024	$45.05	$10.64	$17.54	$2.05	$75.28
	01/01/2025	$46.30	$10.64	$17.54	$2.05	$76.53
For apprentice rates see "Apprentice- SHEET METAL WORKER"						
HVAC (TESTING AND BALANCING -WATER) *PLUMBERS & PIPEFITTERS LOCAL 104*	09/17/2023	$47.96	$9.55	$17.10	$0.00	$74.61
	03/17/2024	$49.21	$9.55	$17.10	$0.00	$75.86
For apprentice rates see "Apprentice- PIPEFITTER" or "PLUMBER/PIPEFITTER"						
HVAC MECHANIC *PLUMBERS & PIPEFITTERS LOCAL 104*	09/17/2023	$47.96	$9.55	$17.10	$0.00	$74.61
	03/17/2024	$49.21	$9.55	$17.10	$0.00	$75.86
For apprentice rates see "Apprentice- PIPEFITTER" or "PLUMBER/PIPEFITTER"						
HYDRAULIC DRILLS (HEAVY & HIGHWAY) *LABORERS - ZONE 3 (HEAVY & HIGHWAY)*	12/01/2023	$34.38	$9.65	$14.78	$0.00	$58.81
	06/01/2024	$35.58	$9.65	$14.78	$0.00	$60.01
	12/01/2024	$36.78	$9.65	$14.78	$0.00	$61.21
	06/01/2025	$38.03	$9.65	$14.78	$0.00	$62.46
	12/01/2025	$39.27	$9.65	$14.78	$0.00	$63.70
	06/01/2026	$40.57	$9.65	$14.78	$0.00	$65.00
	12/01/2026	$41.86	$9.65	$14.78	$0.00	$66.29
For apprentice rates see "Apprentice- LABORER (Heavy and Highway)						
INSULATOR (PIPES & TANKS) *HEAT & FROST INSULATORS LOCAL 6 (SPRINGFIELD)*	09/01/2023	$42.80	$14.75	$19.61	$0.00	$77.16
	09/01/2024	$45.54	$14.75	$19.61	$0.00	$79.90
	09/01/2025	$48.27	$14.75	$19.61	$0.00	$82.63
	09/01/2026	$51.01	$14.75	$19.61	$0.00	$85.37

Classification	Effective Date	Base Wage	Health	Pension	Supplemental Unemployment	Total Rate

Apprentice - *ASBESTOS INSULATOR (Pipes & Tanks) - Local 6 Springfield*

Effective Date - 09/01/2023

Step	percent	Apprentice Base Wage	Health	Pension	Supplemental Unemployment	Total Rate
1	50	$21.40	$14.75	$14.32	$0.00	$50.47
2	60	$25.68	$14.75	$15.37	$0.00	$55.80
3	70	$29.96	$14.75	$16.43	$0.00	$61.14
4	80	$34.24	$14.75	$17.49	$0.00	$66.48

Effective Date - 09/01/2024

Step	percent	Apprentice Base Wage	Health	Pension	Supplemental Unemployment	Total Rate
1	50	$22.77	$14.75	$14.32	$0.00	$51.84
2	60	$27.32	$14.75	$15.37	$0.00	$57.44
3	70	$31.88	$14.75	$16.43	$0.00	$63.06
4	80	$36.43	$14.75	$17.49	$0.00	$68.67

Notes:
Steps are 1 year

Apprentice to Journeyworker Ratio:1:4

IRONWORKER/WELDER *IRONWORKERS LOCAL 7 (SPRINGFIELD AREA)*	09/16/2023	$39.81	$8.25	$22.70	$0.00	$70.76
	03/16/2024	$40.66	$8.25	$22.70	$0.00	$71.61

Apprentice - *IRONWORKER - Local 7 Springfield*

Effective Date - 09/16/2023

Step	percent	Apprentice Base Wage	Health	Pension	Supplemental Unemployment	Total Rate
1	60	$23.89	$8.25	$22.70	$0.00	$54.84
2	70	$27.87	$8.25	$22.70	$0.00	$58.82
3	75	$29.86	$8.25	$22.70	$0.00	$60.81
4	80	$31.85	$8.25	$22.70	$0.00	$62.80
5	85	$33.84	$8.25	$22.70	$0.00	$64.79
6	90	$35.83	$8.25	$22.70	$0.00	$66.78

Effective Date - 03/16/2024

Step	percent	Apprentice Base Wage	Health	Pension	Supplemental Unemployment	Total Rate
1	60	$24.40	$8.25	$22.70	$0.00	$55.35
2	70	$28.46	$8.25	$22.70	$0.00	$59.41
3	75	$30.50	$8.25	$22.70	$0.00	$61.45
4	80	$32.53	$8.25	$22.70	$0.00	$63.48
5	85	$34.56	$8.25	$22.70	$0.00	$65.51
6	90	$36.59	$8.25	$22.70	$0.00	$67.54

Notes:

Apprentice to Journeyworker Ratio:1:4

Classification	Effective Date	Base Wage	Health	Pension	Supplemental Unemployment	Total Rate
JACKHAMMER & PAVING BREAKER OPERATOR *LABORERS - ZONE 3 (BUILDING & SITE)*	12/01/2023	$33.88	$9.65	$16.84	$0.00	$60.37
For apprentice rates see "Apprentice- LABORER"						
LABORER *LABORERS - ZONE 3 (BUILDING & SITE)*	12/01/2023	$33.50	$9.65	$16.84	$0.00	$59.99

Apprentice - *LABORER - Zone 3 Building & Site*

Effective Date - 12/01/2023

Step	percent	Apprentice Base Wage	Health	Pension	Supplemental Unemployment	Total Rate
1	60	$20.10	$9.65	$16.84	$0.00	$46.59
2	70	$23.45	$9.65	$16.84	$0.00	$49.94
3	80	$26.80	$9.65	$16.84	$0.00	$53.29
4	90	$30.15	$9.65	$16.84	$0.00	$56.64

Notes:

Apprentice to Journeyworker Ratio:1:5

LABORER (HEAVY & HIGHWAY) *LABORERS - ZONE 3 (HEAVY & HIGHWAY)*	12/01/2023	$33.63	$9.65	$14.78	$0.00	$58.06
	06/01/2024	$34.83	$9.65	$14.78	$0.00	$59.26
	12/01/2024	$36.03	$9.65	$14.78	$0.00	$60.46
	06/01/2025	$37.28	$9.65	$14.78	$0.00	$61.71
	12/01/2025	$38.52	$9.65	$14.78	$0.00	$62.95
	06/01/2026	$39.82	$9.65	$14.78	$0.00	$64.25
	12/01/2026	$41.11	$9.65	$14.78	$0.00	$65.54

Apprentice - *LABORER (Heavy & Highway) - Zone 3*

Effective Date - 12/01/2023

Step	percent	Apprentice Base Wage	Health	Pension	Supplemental Unemployment	Total Rate
1	60	$20.18	$9.65	$14.78	$0.00	$44.61
2	70	$23.54	$9.65	$14.78	$0.00	$47.97
3	80	$26.90	$9.65	$14.78	$0.00	$51.33
4	90	$30.27	$9.65	$14.78	$0.00	$54.70

Effective Date - 06/01/2024

Step	percent	Apprentice Base Wage	Health	Pension	Supplemental Unemployment	Total Rate
1	60	$20.90	$9.65	$14.78	$0.00	$45.33
2	70	$24.38	$9.65	$14.78	$0.00	$48.81
3	80	$27.86	$9.65	$14.78	$0.00	$52.29
4	90	$31.35	$9.65	$14.78	$0.00	$55.78

Notes:

Apprentice to Journeyworker Ratio:1:5

Classification	Effective Date	Base Wage	Health	Pension	Supplemental Unemployment	Total Rate
LABORER: CARPENTER TENDER *LABORERS - ZONE 3 (BUILDING & SITE)*	12/01/2023	$33.50	$9.65	$16.84	$0.00	$59.99
For apprentice rates see "Apprentice- LABORER"						
LABORER: CEMENT FINISHER TENDER *LABORERS - ZONE 3 (BUILDING & SITE)*	12/01/2023	$34.13	$9.40	$16.59	$0.00	$60.12
For apprentice rates see "Apprentice- LABORER"						
LABORER: HAZARDOUS WASTE/ASBESTOS REMOVER *LABORERS - ZONE 3 (BUILDING & SITE)*	12/01/2023	$33.60	$9.65	$16.97	$0.00	$60.22
For apprentice rates see "Apprentice- LABORER"						
LABORER: MASON TENDER *LABORERS - ZONE 3 (BUILDING & SITE)*	12/01/2023	$34.63	$9.65	$16.84	$0.00	$61.12
For apprentice rates see "Apprentice- LABORER"						
LABORER: MASON TENDER (HEAVY & HIGHWAY) *LABORERS - ZONE 3 (HEAVY & HIGHWAY)*	12/01/2023	$33.88	$9.65	$14.78	$0.00	$58.31
	06/01/2024	$35.08	$9.65	$14.78	$0.00	$59.51
	12/01/2024	$36.28	$9.65	$14.78	$0.00	$60.71
	06/01/2025	$37.53	$9.65	$14.78	$0.00	$61.96
	12/01/2025	$38.77	$9.65	$14.78	$0.00	$63.20
	06/01/2026	$40.07	$9.65	$14.78	$0.00	$64.50
	12/01/2026	$41.36	$9.65	$14.78	$0.00	$65.79
For apprentice rates see "Apprentice- LABORER (Heavy and Highway)"						
LABORER: MULTI-TRADE TENDER *LABORERS - ZONE 3 (BUILDING & SITE)*	12/01/2023	$33.50	$9.65	$16.84	$0.00	$59.99
For apprentice rates see "Apprentice- LABORER"						
LABORER: TREE REMOVER *LABORERS - ZONE 3 (BUILDING & SITE)*	12/01/2023	$33.50	$9.65	$16.84	$0.00	$59.99
This classification applies to the removal of standing trees, and the trimming and removal of branches and limbs when related to public works construction or site clearance incidental to construction . For apprentice rates see "Apprentice- LABORER"						
LASER BEAM OPERATOR *LABORERS - ZONE 3 (BUILDING & SITE)*	12/01/2023	$33.88	$9.65	$16.84	$0.00	$60.37
For apprentice rates see "Apprentice- LABORER"						
LASER BEAM OPERATOR (HEAVY & HIGHWAY) *LABORERS - ZONE 3 (HEAVY & HIGHWAY)*	12/01/2023	$33.88	$9.65	$14.78	$0.00	$58.31
	06/01/2024	$35.08	$9.65	$14.78	$0.00	$59.51
	12/01/2024	$36.28	$9.65	$14.78	$0.00	$60.71
	06/01/2025	$37.53	$9.65	$14.78	$0.00	$61.96
	12/01/2025	$38.77	$9.65	$14.78	$0.00	$63.20
	06/01/2026	$40.07	$9.65	$14.78	$0.00	$64.50
	12/01/2026	$41.36	$9.65	$14.78	$0.00	$65.79
For apprentice rates see "Apprentice- LABORER (Heavy and Highway)"						
MARBLE & TILE FINISHERS *BRICKLAYERS LOCAL 3 (SPR/PITT) - MARBLE & TILE*	02/01/2024	$41.37	$11.49	$20.53	$0.00	$73.39
	08/01/2024	$43.05	$11.49	$20.53	$0.00	$75.07
	02/01/2025	$44.90	$11.49	$20.53	$0.00	$76.92
	08/01/2025	$45.81	$11.49	$20.53	$0.00	$77.83
	02/01/2026	$46.89	$11.49	$20.53	$0.00	$78.91
	08/01/2026	$48.65	$11.49	$20.53	$0.00	$80.67
	02/01/2027	$49.77	$11.49	$20.53	$0.00	$81.79

Classification	Effective Date	Base Wage	Health	Pension	Supplemental Unemployment	Total Rate

Apprentice - *MARBLE-TILE FINISHER-Local 3 Marble/Tile (Spr/Pitt)*

Effective Date - 02/01/2024

Step	percent	Apprentice Base Wage	Health	Pension	Supplemental Unemployment	Total Rate
1	50	$20.69	$11.49	$20.53	$0.00	$52.71
2	60	$24.82	$11.49	$20.53	$0.00	$56.84
3	70	$28.96	$11.49	$20.53	$0.00	$60.98
4	80	$33.10	$11.49	$20.53	$0.00	$65.12
5	90	$37.23	$11.49	$20.53	$0.00	$69.25

Effective Date - 08/01/2024

Step	percent	Apprentice Base Wage	Health	Pension	Supplemental Unemployment	Total Rate
1	50	$21.53	$11.49	$20.53	$0.00	$53.55
2	60	$25.83	$11.49	$20.53	$0.00	$57.85
3	70	$30.14	$11.49	$20.53	$0.00	$62.16
4	80	$34.44	$11.49	$20.53	$0.00	$66.46
5	90	$38.75	$11.49	$20.53	$0.00	$70.77

Notes:

Apprentice to Journeyworker Ratio:1:5

MARBLE MASON/TILE LAYER(SP/PT)SeeBrick
BRICKLAYERS LOCAL 3 (SPR/PITT) - MARBLE & TILE

See "BRICK/STONE/ARTIFICIAL MASONRY(INCL.MASONRY WATERPROOFING)

MECH. SWEEPER OPERATOR (ON CONST. SITES)
OPERATING ENGINEERS LOCAL 98

Effective Date	Base Wage	Health	Pension	Supplemental Unemployment	Total Rate
12/01/2023	$39.56	$13.78	$15.15	$0.00	$68.49

For apprentice rates see "Apprentice- OPERATING ENGINEERS"

MECHANIC/WELDER/BOOM TRUCK
OPERATING ENGINEERS LOCAL 98

Effective Date	Base Wage	Health	Pension	Supplemental Unemployment	Total Rate
12/01/2023	$39.03	$13.38	$15.15	$0.00	$67.56

For apprentice rates see "Apprentice- OPERATING ENGINEERS"

MILLWRIGHT (Zone 3)
MILLWRIGHTS LOCAL 1121 - Zone 3

Effective Date	Base Wage	Health	Pension	Supplemental Unemployment	Total Rate
01/01/2024	$41.20	$10.08	$21.22	$0.00	$72.50
01/06/2025	$43.48	$10.08	$21.22	$0.00	$74.78
01/05/2026	$45.76	$10.08	$21.22	$0.00	$77.06

Classification	Effective Date	Base Wage	Health	Pension	Supplemental Unemployment	Total Rate

Apprentice - *MILLWRIGHT - Local 1121 Zone 3*

Effective Date - 01/01/2024

Step	percent	Apprentice Base Wage	Health	Pension	Supplemental Unemployment	Total Rate
1	55	$22.66	$10.08	$5.36	$0.00	$38.10
2	65	$26.78	$10.08	$6.34	$0.00	$43.20
3	75	$30.90	$10.08	$18.78	$0.00	$59.76
4	85	$35.02	$10.08	$19.76	$0.00	$64.86

Effective Date - 01/06/2025

Step	percent	Apprentice Base Wage	Health	Pension	Supplemental Unemployment	Total Rate
1	55	$23.91	$10.08	$5.36	$0.00	$39.35
2	65	$28.26	$10.08	$6.34	$0.00	$44.68
3	75	$32.61	$10.08	$18.78	$0.00	$61.47
4	85	$36.96	$10.08	$19.76	$0.00	$66.80

Notes: Step 1&2 Appr. indentured after 1/6/2020 receive no pension, but do receive annuity. (Step 1 $5.72, Step 2 $6.66)
Steps are 2,000 hours

Apprentice to Journeyworker Ratio:1:4

MORTAR MIXER *LABORERS - ZONE 3 (BUILDING & SITE)*	12/01/2023	$33.88	$9.65	$16.84	$0.00	$60.37
For apprentice rates see "Apprentice- LABORER"						
OILER *OPERATING ENGINEERS LOCAL 98*	12/01/2023	$35.02	$13.78	$15.15	$0.00	$63.95
For apprentice rates see "Apprentice- OPERATING ENGINEERS"						
OTHER POWER DRIVEN EQUIPMENT - CLASS VI *OPERATING ENGINEERS LOCAL 98*	12/01/2023	$32.74	$13.78	$15.15	$0.00	$61.67
For apprentice rates see "Apprentice- OPERATING ENGINEERS"						
PAINTER (BRIDGES/TANKS) *PAINTERS LOCAL 35 - ZONE 3*	01/01/2024	$56.06	$9.95	$23.95	$0.00	$89.96
	07/01/2024	$57.26	$9.95	$23.95	$0.00	$91.16
	01/01/2025	$58.46	$9.95	$23.95	$0.00	$92.36

Classification	Effective Date	Base Wage	Health	Pension	Supplemental Unemployment	Total Rate

Apprentice - *PAINTER Local 35 - BRIDGES/TANKS*

Effective Date - 01/01/2024

Step	percent	Apprentice Base Wage	Health	Pension	Supplemental Unemployment	Total Rate
1	50	$28.03	$9.95	$0.00	$0.00	$37.98
2	55	$30.83	$9.95	$6.66	$0.00	$47.44
3	60	$33.64	$9.95	$7.26	$0.00	$50.85
4	65	$36.44	$9.95	$7.87	$0.00	$54.26
5	70	$39.24	$9.95	$20.32	$0.00	$69.51
6	75	$42.05	$9.95	$20.93	$0.00	$72.93
7	80	$44.85	$9.95	$21.53	$0.00	$76.33
8	90	$50.45	$9.95	$22.74	$0.00	$83.14

Effective Date - 07/01/2024

Step	percent	Apprentice Base Wage	Health	Pension	Supplemental Unemployment	Total Rate
1	50	$28.63	$9.95	$0.00	$0.00	$38.58
2	55	$31.49	$9.95	$6.66	$0.00	$48.10
3	60	$34.36	$9.95	$7.26	$0.00	$51.57
4	65	$37.22	$9.95	$7.87	$0.00	$55.04
5	70	$40.08	$9.95	$20.32	$0.00	$70.35
6	75	$42.95	$9.95	$20.93	$0.00	$73.83
7	80	$45.81	$9.95	$21.53	$0.00	$77.29
8	90	$51.53	$9.95	$22.74	$0.00	$84.22

Notes:
Steps are 750 hrs.

Apprentice to Journeyworker Ratio:1:1

PAINTER (SPRAY OR SANDBLAST, NEW) *	01/01/2024	$38.83	$9.65	$19.90	$0.00	$68.38
* If 30% or more of surfaces to be painted are new construction, NEW paint rate shall be used.*PAINTERS LOCAL 35 - ZONE 3*	07/01/2024	$40.03	$9.65	$19.90	$0.00	$69.58
	01/01/2025	$41.23	$9.65	$19.90	$0.00	$70.78

Classification	Effective Date	Base Wage	Health	Pension	Supplemental Unemployment	Total Rate

Apprentice - *PAINTER Local 35 Zone 3 - Spray/Sandblast - New*

Effective Date - 01/01/2024

Step	percent	Apprentice Base Wage	Health	Pension	Supplemental Unemployment	Total Rate
1	50	$19.42	$9.95	$0.00	$0.00	$29.37
2	55	$21.36	$9.95	$4.43	$0.00	$35.74
3	60	$23.30	$9.95	$4.83	$0.00	$38.08
4	65	$25.24	$9.95	$5.23	$0.00	$40.42
5	70	$27.18	$9.95	$17.49	$0.00	$54.62
6	75	$29.12	$9.95	$17.89	$0.00	$56.96
7	80	$31.06	$9.95	$18.29	$0.00	$59.30
8	90	$34.95	$9.95	$19.10	$0.00	$64.00

Effective Date - 07/01/2024

Step	percent	Apprentice Base Wage	Health	Pension	Supplemental Unemployment	Total Rate
1	50	$20.02	$9.95	$0.00	$0.00	$29.97
2	55	$22.02	$9.95	$4.43	$0.00	$36.40
3	60	$24.02	$9.95	$4.83	$0.00	$38.80
4	65	$26.02	$9.95	$5.23	$0.00	$41.20
5	70	$28.02	$9.95	$17.49	$0.00	$55.46
6	75	$30.02	$9.95	$17.89	$0.00	$57.86
7	80	$32.02	$9.95	$18.29	$0.00	$60.26
8	90	$36.03	$9.95	$19.10	$0.00	$65.08

Notes:
Steps are 750 hrs.

Apprentice to Journeyworker Ratio:1:1

PAINTER (SPRAY OR SANDBLAST, REPAINT) *PAINTERS LOCAL 35 - ZONE 3*	01/01/2024	$36.15	$9.95	$19.90	$0.00	$66.00
	07/01/2024	$37.35	$9.95	$19.90	$0.00	$67.20
	01/01/2025	$38.55	$9.95	$19.90	$0.00	$68.40

Classification	Effective Date	Base Wage	Health	Pension	Supplemental Unemployment	Total Rate

Apprentice - *PAINTER Local 35 Zone 3 - Spray/Sandblast - Repaint*

Effective Date - 01/01/2024

Step	percent	Apprentice Base Wage	Health	Pension	Supplemental Unemployment	Total Rate
1	50	$18.08	$9.95	$0.00	$0.00	$28.03
2	55	$19.88	$9.95	$4.43	$0.00	$34.26
3	60	$21.69	$9.95	$4.83	$0.00	$36.47
4	65	$23.50	$9.95	$5.23	$0.00	$38.68
5	70	$25.31	$9.95	$17.49	$0.00	$52.75
6	75	$27.11	$9.95	$17.89	$0.00	$54.95
7	80	$28.92	$9.95	$18.29	$0.00	$57.16
8	90	$32.54	$9.95	$19.10	$0.00	$61.59

Effective Date - 07/01/2024

Step	percent	Apprentice Base Wage	Health	Pension	Supplemental Unemployment	Total Rate
1	50	$18.68	$9.95	$0.00	$0.00	$28.63
2	55	$20.54	$9.95	$4.43	$0.00	$34.92
3	60	$22.41	$9.95	$4.83	$0.00	$37.19
4	65	$24.28	$9.95	$5.23	$0.00	$39.46
5	70	$26.15	$9.95	$17.49	$0.00	$53.59
6	75	$28.01	$9.95	$17.89	$0.00	$55.85
7	80	$29.88	$9.95	$18.29	$0.00	$58.12
8	90	$33.62	$9.95	$19.10	$0.00	$62.67

Notes:
Steps are 750 hrs.

Apprentice to Journeyworker Ratio:1:1

PAINTER / TAPER (BRUSH, NEW) *	01/01/2024	$37.43	$9.95	$19.90	$0.00	$67.28
* If 30% or more of surfaces to be painted are new construction, NEW paint rate shall be used.*PAINTERS LOCAL 35 - ZONE 3*	07/01/2024	$38.63	$9.95	$19.90	$0.00	$68.48
	01/01/2025	$39.83	$9.95	$19.90	$0.00	$69.68

Classification	Effective Date	Base Wage	Health	Pension	Supplemental Unemployment	Total Rate

Apprentice - *PAINTER - Local 35 Zone 3 - BRUSH NEW*

Effective Date - 01/01/2024

Step	percent	Apprentice Base Wage	Health	Pension	Supplemental Unemployment	Total Rate
1	50	$18.72	$9.95	$0.00	$0.00	$28.67
2	55	$20.59	$9.95	$4.43	$0.00	$34.97
3	60	$22.46	$9.95	$4.83	$0.00	$37.24
4	65	$24.33	$9.95	$5.23	$0.00	$39.51
5	70	$26.20	$9.95	$17.49	$0.00	$53.64
6	75	$28.07	$9.95	$17.89	$0.00	$55.91
7	80	$29.94	$9.95	$18.29	$0.00	$58.18
8	90	$33.69	$9.95	$19.10	$0.00	$62.74

Effective Date - 07/01/2024

Step	percent	Apprentice Base Wage	Health	Pension	Supplemental Unemployment	Total Rate
1	50	$19.32	$9.95	$0.00	$0.00	$29.27
2	55	$21.25	$9.95	$4.43	$0.00	$35.63
3	60	$23.18	$9.95	$4.83	$0.00	$37.96
4	65	$25.11	$9.95	$5.23	$0.00	$40.29
5	70	$27.04	$9.95	$17.49	$0.00	$54.48
6	75	$28.97	$9.95	$17.89	$0.00	$56.81
7	80	$30.90	$9.95	$18.29	$0.00	$59.14
8	90	$34.77	$9.95	$19.10	$0.00	$63.82

Notes:
Steps are 750 hrs.

Apprentice to Journeyworker Ratio:1:1

PAINTER / TAPER (BRUSH, REPAINT) *PAINTERS LOCAL 35 - ZONE 3*	01/01/2024	$34.75	$9.95	$19.90	$0.00	$64.60
	07/01/2024	$35.95	$9.95	$19.90	$0.00	$65.80
	01/01/2025	$37.15	$9.95	$19.90	$0.00	$67.00

Classification	Effective Date	Base Wage	Health	Pension	Supplemental Unemployment	Total Rate

Apprentice - *PAINTER Local 35 Zone 3 - BRUSH REPAINT*

Effective Date - 01/01/2024

Step	percent	Apprentice Base Wage	Health	Pension	Supplemental Unemployment	Total Rate
1	50	$17.38	$9.95	$0.00	$0.00	$27.33
2	55	$19.11	$9.95	$4.43	$0.00	$33.49
3	60	$20.85	$9.95	$4.83	$0.00	$35.63
4	65	$22.59	$9.95	$5.23	$0.00	$37.77
5	70	$24.33	$9.95	$17.49	$0.00	$51.77
6	75	$26.06	$9.95	$17.89	$0.00	$53.90
7	80	$27.80	$9.95	$18.29	$0.00	$56.04
8	90	$31.28	$9.95	$19.10	$0.00	$60.33

Effective Date - 07/01/2024

Step	percent	Apprentice Base Wage	Health	Pension	Supplemental Unemployment	Total Rate
1	50	$17.98	$9.95	$0.00	$0.00	$27.93
2	55	$19.77	$9.95	$4.43	$0.00	$34.15
3	60	$21.57	$9.95	$4.83	$0.00	$36.35
4	65	$23.37	$9.95	$5.23	$0.00	$38.55
5	70	$25.17	$9.95	$17.49	$0.00	$52.61
6	75	$26.96	$9.95	$17.89	$0.00	$54.80
7	80	$28.76	$9.95	$18.29	$0.00	$57.00
8	90	$32.36	$9.95	$19.10	$0.00	$61.41

Notes:
Steps are 750 hrs.

Apprentice to Journeyworker Ratio:1:1

PAINTER TRAFFIC MARKINGS (HEAVY/HIGHWAY) *LABORERS - ZONE 3 (HEAVY & HIGHWAY)*	12/01/2023	$33.63	$9.65	$14.78	$0.00	$58.06
	06/01/2024	$34.83	$9.65	$14.78	$0.00	$59.26
	12/01/2024	$36.03	$9.65	$14.78	$0.00	$60.46
	06/01/2025	$37.28	$9.65	$14.78	$0.00	$61.71
	12/01/2025	$38.52	$9.65	$14.78	$0.00	$62.95
	06/01/2026	$39.82	$9.65	$14.78	$0.00	$64.25
	12/01/2026	$41.11	$9.65	$14.78	$0.00	$65.54
For apprentice rates see "Apprentice- LABORER (Heavy and Highway)						
PANEL & PICKUP TRUCKS DRIVER *TEAMSTERS JOINT COUNCIL NO. 10 ZONE B*	01/01/2024	$38.78	$15.07	$18.67	$0.00	$72.52
	06/01/2024	$39.78	$15.07	$18.67	$0.00	$73.52
	12/01/2024	$39.78	$15.07	$20.17	$0.00	$75.02
	01/01/2025	$39.78	$15.57	$20.17	$0.00	$75.52
	06/01/2025	$40.78	$15.57	$20.17	$0.00	$76.52
	12/01/2025	$40.78	$15.57	$21.78	$0.00	$78.13
	01/01/2026	$40.78	$16.17	$21.78	$0.00	$78.73
	06/01/2026	$41.78	$16.17	$21.78	$0.00	$79.73
	12/01/2026	$41.78	$16.17	$23.52	$0.00	$81.47
	01/01/2027	$41.78	$16.77	$23.52	$0.00	$82.07

Classification	Effective Date	Base Wage	Health	Pension	Supplemental Unemployment	Total Rate
PIER AND DOCK CONSTRUCTOR (UNDERPINNING AND DECK) *PILE DRIVER LOCAL 56 (ZONE 3)* For apprentice rates see "Apprentice- PILE DRIVER"	08/01/2020	$43.53	$9.40	$23.12	$0.00	$76.05
PILE DRIVER *PILE DRIVER LOCAL 56 (ZONE 3)*	08/01/2020	$43.53	$9.40	$23.12	$0.00	$76.05

Apprentice - *PILE DRIVER - Local 56 Zone 3*

Effective Date - 08/01/2020

Step	percent	Apprentice Base Wage	Health	Pension	Supplemental Unemployment	Total Rate
1	0	$0.00	$0.00	$0.00	$0.00	$0.00

Notes: Apprentice wages shall be no less than the following Steps;
(Same as set in Zone 1)
1$57.06/2$61.96/3$66.87/4$69.32/5$71.78/6$71.78/7$76.68/8$76.68

Apprentice to Journeyworker Ratio:1:5

PIPELAYER *LABORERS - ZONE 3 (BUILDING & SITE)* For apprentice rates see "Apprentice- LABORER"	12/01/2023	$33.88	$9.65	$16.84	$0.00	$60.37
PIPELAYER (HEAVY & HIGHWAY) *LABORERS - ZONE 3 (HEAVY & HIGHWAY)*	12/01/2023	$33.88	$9.65	$14.78	$0.00	$58.31
	06/01/2024	$35.08	$9.65	$14.78	$0.00	$59.51
	12/01/2024	$36.28	$9.65	$14.78	$0.00	$60.71
	06/01/2025	$37.53	$9.65	$14.78	$0.00	$61.96
	12/01/2025	$38.77	$9.65	$14.78	$0.00	$63.20
	06/01/2026	$40.07	$9.65	$14.78	$0.00	$64.50
	12/01/2026	$41.36	$9.65	$14.78	$0.00	$65.79
For apprentice rates see "Apprentice- LABORER (Heavy and Highway)						
PLUMBER & PIPEFITTER *PLUMBERS & PIPEFITTERS LOCAL 104*	09/17/2023	$47.96	$9.55	$17.10	$0.00	$74.61
	03/17/2024	$49.21	$9.55	$17.10	$0.00	$75.86

Classification	Effective Date	Base Wage	Health	Pension	Supplemental Unemployment	Total Rate

Apprentice - *PLUMBER/PIPEFITTER - Local 104*

Effective Date - 09/17/2023

Step	percent	Apprentice Base Wage	Health	Pension	Supplemental Unemployment	Total Rate
1	45	$21.58	$9.55	$10.10	$0.00	$41.23
2	50	$23.98	$9.55	$10.10	$0.00	$43.63
3	55	$26.38	$9.55	$10.10	$0.00	$46.03
4	60	$28.78	$9.55	$10.10	$0.00	$48.43
5	65	$31.17	$9.55	$10.10	$0.00	$50.82
6	70	$33.57	$9.55	$10.10	$0.00	$53.22
7	75	$35.97	$9.55	$10.10	$0.00	$55.62
8	80	$38.37	$9.55	$10.10	$0.00	$58.02
9	80	$38.37	$9.55	$17.10	$0.00	$65.02
10	80	$38.37	$9.55	$17.10	$0.00	$65.02

Effective Date - 03/17/2024

Step	percent	Apprentice Base Wage	Health	Pension	Supplemental Unemployment	Total Rate
1	45	$22.14	$9.55	$10.10	$0.00	$41.79
2	50	$24.61	$9.55	$10.10	$0.00	$44.26
3	55	$27.07	$9.55	$10.10	$0.00	$46.72
4	60	$29.53	$9.55	$10.10	$0.00	$49.18
5	65	$31.99	$9.55	$10.10	$0.00	$51.64
6	70	$34.45	$9.55	$10.10	$0.00	$54.10
7	75	$36.91	$9.55	$10.10	$0.00	$56.56
8	80	$39.37	$9.55	$10.10	$0.00	$59.02
9	80	$39.37	$9.55	$17.10	$0.00	$66.02
10	80	$39.37	$9.55	$17.10	$0.00	$66.02

Notes: **1:1,2:5,3:9,4:12

Apprentice to Journeyworker Ratio:**

PNEUMATIC CONTROLS (TEMP.) *PLUMBERS & PIPEFITTERS LOCAL 104*	09/17/2023	$47.96	$9.55	$17.10	$0.00	$74.61
	03/17/2024	$49.21	$9.55	$17.10	$0.00	$75.86
For apprentice rates see "Apprentice- PIPEFITTER" or "PLUMBER/PIPEFITTER"						
PNEUMATIC DRILL/TOOL OPERATOR (HEAVY & HIGHWAY) *LABORERS - ZONE 3 (HEAVY & HIGHWAY)*	12/01/2023	$33.88	$9.65	$14.78	$0.00	$58.31
	06/01/2024	$35.08	$9.65	$14.78	$0.00	$59.51
	12/01/2024	$36.28	$9.65	$14.78	$0.00	$60.71
	06/01/2025	$37.53	$9.65	$14.78	$0.00	$61.96
	12/01/2025	$38.77	$9.65	$14.78	$0.00	$63.20
	06/01/2026	$40.07	$9.65	$14.78	$0.00	$64.50
	12/01/2026	$41.36	$9.65	$14.78	$0.00	$65.79
For apprentice rates see "Apprentice- LABORER (Heavy and Highway)						
POWDERMAN & BLASTER *LABORERS - ZONE 3 (BUILDING & SITE)*	12/01/2023	$35.13	$9.40	$16.59	$0.00	$61.12
For apprentice rates see "Apprentice- LABORER"						

Classification	Effective Date	Base Wage	Health	Pension	Supplemental Unemployment	Total Rate
POWDERMAN & BLASTER (HEAVY & HIGHWAY) *LABORERS - ZONE 3 (HEAVY & HIGHWAY)*	12/01/2023	$34.63	$9.65	$14.78	$0.00	$59.06
	06/01/2024	$35.83	$9.65	$14.78	$0.00	$60.26
	12/01/2024	$37.03	$9.65	$14.78	$0.00	$61.46
	06/01/2025	$38.28	$9.65	$14.78	$0.00	$62.71
	12/01/2025	$39.52	$9.65	$14.78	$0.00	$63.95
	06/01/2026	$40.82	$9.65	$14.78	$0.00	$65.25
	12/01/2026	$42.11	$9.65	$14.78	$0.00	$66.54
For apprentice rates see "Apprentice- LABORER (Heavy and Highway)						
PUMP OPERATOR (CONCRETE) *OPERATING ENGINEERS LOCAL 98*	12/01/2023	$39.56	$13.78	$15.15	$0.00	$68.49
For apprentice rates see "Apprentice- OPERATING ENGINEERS"						
PUMP OPERATOR (DEWATERING, OTHER) *OPERATING ENGINEERS LOCAL 98*	12/01/2023	$39.03	$13.38	$15.15	$0.00	$67.56
For apprentice rates see "Apprentice- OPERATING ENGINEERS"						
READY-MIX CONCRETE DRIVER *TEAMSTERS 404 - Construction Service (Northampton)*	05/01/2020	$22.44	$11.07	$6.50	$0.00	$40.01
RIDE-ON MOTORIZED BUGGY OPERATOR *LABORERS - ZONE 3 (BUILDING & SITE)*	12/01/2023	$33.88	$9.65	$16.84	$0.00	$60.37
For apprentice rates see "Apprentice- LABORER"						
ROLLER OPERATOR *OPERATING ENGINEERS LOCAL 98*	12/01/2023	$38.42	$13.78	$15.15	$0.00	$67.35
For apprentice rates see "Apprentice- OPERATING ENGINEERS"						
ROOFER (Coal tar pitch) *ROOFERS LOCAL 248*	07/16/2023	$38.91	$10.35	$18.00	$0.00	$67.26
For apprentice rates see "Apprentice- ROOFER"						
ROOFER (Inc.Roofer Waterproofng &Roofer Damproofg) *ROOFERS LOCAL 248*	07/16/2023	$38.41	$10.35	$18.00	$0.00	$66.76

Apprentice - *ROOFER - Local 248*

Effective Date - 07/16/2023

Step	percent	Apprentice Base Wage	Health	Pension	Supplemental Unemployment	Total Rate
1	60	$23.05	$10.35	$0.00	$0.00	$33.40
2	65	$24.97	$10.35	$18.00	$0.00	$53.32
3	70	$26.89	$10.35	$18.00	$0.00	$55.24
4	75	$28.81	$10.35	$18.00	$0.00	$57.16
5	80	$30.73	$10.35	$18.00	$0.00	$59.08
6	85	$32.65	$10.35	$18.00	$0.00	$61.00
7	90	$34.57	$10.35	$18.00	$0.00	$62.92
8	95	$36.49	$10.35	$18.00	$0.00	$64.84

Notes:

Steps are 750 hrs.Roofer(Tear Off)1:1; Same as above

Apprentice to Journeyworker Ratio:1:3

ROOFER SLATE / TILE / PRECAST CONCRETE *ROOFERS LOCAL 248*	07/16/2023	$38.91	$10.35	$18.00	$0.00	$67.26
For apprentice rates see "Apprentice- ROOFER"						

Classification	Effective Date	Base Wage	Health	Pension	Supplemental Unemployment	Total Rate
SCRAPER *OPERATING ENGINEERS LOCAL 98* For apprentice rates see "Apprentice- OPERATING ENGINEERS"	12/01/2023	$39.03	$13.38	$15.15	$0.00	$67.56
SELF-POWERED ROLLERS AND COMPACTORS (TAMPERS) *OPERATING ENGINEERS LOCAL 98* For apprentice rates see "Apprentice- OPERATING ENGINEERS"	12/01/2023	$38.42	$13.78	$15.15	$0.00	$67.35
SELF-PROPELLED POWER BROOM *OPERATING ENGINEERS LOCAL 98* For apprentice rates see "Apprentice- OPERATING ENGINEERS"	12/01/2023	$35.80	$13.78	$15.15	$0.00	$64.73
SHEETMETAL WORKER *SHEETMETAL WORKERS LOCAL 63*	01/01/2024	$43.80	$10.64	$17.54	$2.05	$74.03
	07/01/2024	$45.05	$10.64	$17.54	$2.05	$75.28
	01/01/2025	$46.30	$10.64	$17.54	$2.05	$76.53

Apprentice - *SHEET METAL WORKER - Local 63*

Effective Date - 01/01/2024

Step	percent	Apprentice Base Wage	Health	Pension	Supplemental Unemployment	Total Rate
1	45	$19.71	$4.79	$4.76	$0.92	$30.18
2	50	$21.90	$5.32	$5.29	$1.03	$33.54
3	55	$24.09	$5.85	$5.82	$1.13	$36.89
4	60	$26.28	$6.38	$6.35	$1.23	$40.24
5	65	$28.47	$6.92	$6.88	$1.33	$43.60
6	70	$30.66	$7.45	$7.41	$1.44	$46.96
7	75	$32.85	$7.98	$7.94	$1.54	$50.31
8	80	$35.04	$8.51	$15.42	$1.64	$60.61
9	85	$37.23	$9.04	$15.95	$1.74	$63.96
10	90	$39.42	$9.58	$16.48	$1.85	$67.33

Effective Date - 07/01/2024

Step	percent	Apprentice Base Wage	Health	Pension	Supplemental Unemployment	Total Rate
1	45	$20.27	$4.79	$4.76	$0.92	$30.74
2	50	$22.53	$5.32	$5.29	$1.03	$34.17
3	55	$24.78	$5.85	$5.82	$1.13	$37.58
4	60	$27.03	$6.38	$6.35	$1.23	$40.99
5	65	$29.28	$6.92	$6.88	$1.33	$44.41
6	70	$31.54	$7.45	$7.41	$1.44	$47.84
7	75	$33.79	$7.98	$7.94	$1.54	$51.25
8	80	$36.04	$8.51	$15.42	$1.64	$61.61
9	85	$38.29	$9.04	$15.95	$1.74	$65.02
10	90	$40.55	$9.58	$16.48	$1.85	$68.46

Notes:

Apprentice to Journeyworker Ratio:1:3

Classification	Effective Date	Base Wage	Health	Pension	Supplemental Unemployment	Total Rate
SPECIALIZED EARTH MOVING EQUIP < 35 TONS *TEAMSTERS JOINT COUNCIL NO. 10 ZONE B*	01/01/2024	$39.24	$15.07	$18.67	$0.00	$72.98
	06/01/2024	$40.24	$15.07	$18.67	$0.00	$73.98
	12/01/2024	$40.24	$15.07	$20.17	$0.00	$75.48
	01/01/2025	$40.24	$15.57	$20.17	$0.00	$75.98
	06/01/2025	$41.24	$15.57	$20.17	$0.00	$76.98
	12/01/2025	$41.24	$15.57	$21.78	$0.00	$78.59
	01/01/2026	$41.24	$16.17	$21.78	$0.00	$79.19
	06/01/2026	$42.24	$16.17	$21.78	$0.00	$80.19
	12/01/2026	$42.24	$16.17	$23.52	$0.00	$81.93
	01/01/2027	$42.24	$16.77	$23.52	$0.00	$82.53
SPECIALIZED EARTH MOVING EQUIP > 35 TONS *TEAMSTERS JOINT COUNCIL NO. 10 ZONE B*	01/01/2024	$39.53	$15.07	$18.67	$0.00	$73.27
	06/01/2024	$40.53	$15.07	$18.67	$0.00	$74.27
	12/01/2024	$40.53	$15.07	$20.17	$0.00	$75.77
	01/01/2025	$40.53	$15.57	$20.17	$0.00	$76.27
	06/01/2025	$41.53	$15.57	$20.17	$0.00	$77.27
	12/01/2025	$41.53	$15.57	$21.78	$0.00	$78.88
	01/01/2026	$41.53	$16.17	$21.78	$0.00	$79.48
	06/01/2026	$42.53	$16.17	$21.78	$0.00	$80.48
	12/01/2026	$42.53	$16.17	$23.52	$0.00	$82.22
	01/01/2027	$42.53	$16.77	$23.52	$0.00	$82.82
SPRINKLER FITTER *SPRINKLER FITTERS LOCAL 669*	04/01/2023	$47.43	$11.45	$16.61	$0.00	$75.49

Apprentice - *SPRINKLER FITTER - Local 669*

Effective Date - 04/01/2023

Step	percent	Apprentice Base Wage	Health	Pension	Supplemental Unemployment	Total Rate
1	45	$21.34	$8.22	$0.00	$0.00	$29.56
2	50	$23.72	$8.22	$0.00	$0.00	$31.94
3	55	$26.09	$11.45	$7.20	$0.00	$44.74
4	60	$28.46	$11.45	$8.35	$0.00	$48.26
5	65	$30.83	$11.45	$8.35	$0.00	$50.63
6	70	$33.20	$11.45	$8.60	$0.00	$53.25
7	75	$35.57	$11.45	$8.60	$0.00	$55.62
8	80	$37.94	$11.45	$8.60	$0.00	$57.99
9	85	$40.32	$11.45	$8.60	$0.00	$60.37
10	90	$42.69	$11.45	$8.60	$0.00	$62.74

Notes:

Apprentice to Journeyworker Ratio:1:1

Classification	Effective Date	Base Wage	Health	Pension	Supplemental Unemployment	Total Rate
TELECOMMUNICATION TECHNICIAN *ELECTRICIANS LOCAL 7*	12/31/2023	$49.01	$12.75	$14.61	$0.00	$76.37
	06/30/2024	$50.01	$13.00	$14.86	$0.00	$77.87
	12/29/2024	$51.06	$13.25	$15.06	$0.00	$79.37
	06/29/2025	$52.16	$13.50	$15.21	$0.00	$80.87
	12/28/2025	$53.26	$13.75	$15.36	$0.00	$82.37
	06/28/2026	$54.41	$14.00	$15.46	$0.00	$83.87
	01/03/2027	$55.56	$14.25	$15.56	$0.00	$85.37

Apprentice - *TELECOMMUNICATION TECHNICIAN - Local 7*

Effective Date - 12/31/2023

Step	percent	Apprentice Base Wage	Health	Pension	Supplemental Unemployment	Total Rate
1	40	$19.60	$7.05	$0.59	$0.00	$27.24
2	45	$22.05	$7.05	$0.66	$0.00	$29.76
3	50	$24.51	$12.75	$7.34	$0.00	$44.60
4	55	$26.96	$12.75	$7.41	$0.00	$47.12
5	65	$31.86	$12.75	$9.52	$0.00	$54.13
6	70	$34.31	$12.75	$10.90	$0.00	$57.96

Effective Date - 06/30/2024

Step	percent	Apprentice Base Wage	Health	Pension	Supplemental Unemployment	Total Rate
1	40	$20.00	$7.20	$0.60	$0.00	$27.80
2	45	$22.50	$7.20	$0.68	$0.00	$30.38
3	50	$25.01	$13.00	$7.40	$0.00	$45.41
4	55	$27.51	$13.00	$7.48	$0.00	$47.99
5	65	$32.51	$13.00	$9.64	$0.00	$55.15
6	70	$35.01	$13.00	$11.06	$0.00	$59.07

Notes:
Steps are 800 hours

Apprentice to Journeyworker Ratio:1:1

TERRAZZO FINISHERS *BRICKLAYERS LOCAL 3 (SPR/PITT) - MARBLE & TILE*	02/01/2024	$61.34	$11.49	$23.59	$0.00	$96.42
	08/01/2024	$63.44	$11.49	$23.59	$0.00	$98.52
	02/01/2025	$64.74	$11.49	$23.59	$0.00	$99.82
	08/01/2025	$66.89	$11.49	$23.59	$0.00	$101.97
	02/10/2026	$68.24	$11.49	$23.59	$0.00	$103.32
	08/01/2026	$70.44	$11.49	$23.59	$0.00	$105.52
	02/01/2027	$71.84	$11.49	$23.59	$0.00	$106.92

Classification	Effective Date	Base Wage	Health	Pension	Supplemental Unemployment	Total Rate

Apprentice - *TERRAZZO FINISHER-Local 3 Marble/Tile (Spr/Ptt)*

Effective Date - 02/01/2024

Step	percent	Apprentice Base Wage	Health	Pension	Supplemental Unemployment	Total Rate
1	50	$30.67	$11.49	$23.59	$0.00	$65.75
2	60	$36.80	$11.49	$23.59	$0.00	$71.88
3	70	$42.94	$11.49	$23.59	$0.00	$78.02
4	80	$49.07	$11.49	$23.59	$0.00	$84.15
5	90	$55.21	$11.49	$23.59	$0.00	$90.29

Effective Date - 08/01/2024

Step	percent	Apprentice Base Wage	Health	Pension	Supplemental Unemployment	Total Rate
1	50	$31.72	$11.49	$23.59	$0.00	$66.80
2	60	$38.06	$11.49	$23.59	$0.00	$73.14
3	70	$44.41	$11.49	$23.59	$0.00	$79.49
4	80	$50.75	$11.49	$23.59	$0.00	$85.83
5	90	$57.10	$11.49	$23.59	$0.00	$92.18

Notes:

Apprentice to Journeyworker Ratio:1:5

TERRAZZO MECHANIC *BRICKLAYERS LOCAL 3 (SPR/PITT) - MARBLE & TILE*	02/01/2024	$62.42	$11.49	$23.56	$0.00	$97.47
	08/01/2024	$64.52	$11.49	$23.56	$0.00	$99.57
	02/01/2025	$65.82	$11.49	$23.56	$0.00	$100.87
	08/01/2025	$67.97	$11.49	$23.56	$0.00	$103.02
	02/01/2026	$69.32	$11.49	$23.56	$0.00	$104.37
	08/01/2026	$71.52	$11.49	$23.56	$0.00	$106.57
	02/01/2027	$72.92	$11.49	$23.56	$0.00	$107.97

Classification	Effective Date	Base Wage	Health	Pension	Supplemental Unemployment	Total Rate

Apprentice - *TERRAZZO MECH - Local 3 Marble/Tile (Spr/Pitt)*

Effective Date - 02/01/2024

Step	percent	Apprentice Base Wage	Health	Pension	Supplemental Unemployment	Total Rate
1	50	$31.21	$11.49	$23.56	$0.00	$66.26
2	60	$37.45	$11.49	$23.56	$0.00	$72.50
3	70	$43.69	$11.49	$23.56	$0.00	$78.74
4	80	$49.94	$11.49	$23.56	$0.00	$84.99
5	90	$56.18	$11.49	$23.56	$0.00	$91.23

Effective Date - 08/01/2024

Step	percent	Apprentice Base Wage	Health	Pension	Supplemental Unemployment	Total Rate
1	50	$32.26	$11.49	$23.56	$0.00	$67.31
2	60	$38.71	$11.49	$23.56	$0.00	$73.76
3	70	$45.16	$11.49	$23.56	$0.00	$80.21
4	80	$51.62	$11.49	$23.56	$0.00	$86.67
5	90	$58.07	$11.49	$23.56	$0.00	$93.12

Notes:

Apprentice to Journeyworker Ratio:1:5

TEST BORING DRILLER *LABORERS - FOUNDATION AND MARINE*	12/01/2023	$48.33	$9.65	$18.22	$0.00	$76.20
	06/01/2024	$49.81	$9.65	$18.22	$0.00	$77.68
	12/01/2024	$51.28	$9.65	$18.22	$0.00	$79.15
	06/01/2025	$52.78	$9.65	$18.22	$0.00	$80.65
	12/01/2025	$54.28	$9.65	$18.22	$0.00	$82.15
	06/01/2026	$55.83	$9.65	$18.22	$0.00	$83.70
	12/01/2026	$57.33	$9.65	$18.22	$0.00	$85.20
For apprentice rates see "Apprentice- LABORER"						
TEST BORING DRILLER HELPER *LABORERS - FOUNDATION AND MARINE*	12/01/2023	$44.45	$9.65	$18.22	$0.00	$72.32
	06/01/2024	$45.93	$9.65	$18.22	$0.00	$73.80
	12/01/2024	$47.40	$9.65	$18.22	$0.00	$75.27
	06/01/2025	$48.90	$9.65	$18.22	$0.00	$76.77
	12/01/2025	$50.40	$9.65	$18.22	$0.00	$78.27
	06/01/2026	$51.95	$9.65	$18.22	$0.00	$79.82
	12/01/2026	$53.45	$9.65	$18.22	$0.00	$81.32
For apprentice rates see "Apprentice- LABORER"						
TEST BORING LABORER *LABORERS - FOUNDATION AND MARINE*	12/01/2023	$44.33	$9.65	$18.22	$0.00	$72.20
	06/01/2024	$45.81	$9.65	$18.22	$0.00	$73.68
	12/01/2024	$47.28	$9.65	$18.22	$0.00	$75.15
	06/01/2025	$48.78	$9.65	$18.22	$0.00	$76.65
	12/01/2025	$50.28	$9.65	$18.22	$0.00	$78.15
	06/01/2026	$51.83	$9.65	$18.22	$0.00	$79.70
	12/01/2026	$53.33	$9.65	$18.22	$0.00	$81.20
For apprentice rates see "Apprentice- LABORER"						

Classification	Effective Date	Base Wage	Health	Pension	Supplemental Unemployment	Total Rate
TRACTORS *OPERATING ENGINEERS LOCAL 98*	12/01/2023	$38.42	$13.78	$15.15	$0.00	$67.35
For apprentice rates see "Apprentice- OPERATING ENGINEERS"						
TRAILERS FOR EARTH MOVING EQUIPMENT *TEAMSTERS JOINT COUNCIL NO. 10 ZONE B*	01/01/2024	$39.82	$15.07	$18.67	$0.00	$73.56
	06/01/2024	$40.82	$15.07	$18.67	$0.00	$74.56
	12/01/2024	$40.82	$15.07	$20.17	$0.00	$76.06
	01/01/2025	$40.82	$15.57	$20.17	$0.00	$76.56
	06/01/2025	$41.82	$15.57	$20.17	$0.00	$77.56
	12/01/2025	$41.82	$15.57	$21.78	$0.00	$79.17
	01/01/2026	$41.82	$16.17	$21.78	$0.00	$79.77
	06/01/2026	$42.82	$16.17	$21.78	$0.00	$80.77
	12/01/2026	$42.82	$16.17	$23.52	$0.00	$82.51
	01/01/2027	$42.82	$16.77	$23.52	$0.00	$83.11
TUNNEL WORK - COMPRESSED AIR *LABORERS (COMPRESSED AIR)*	12/01/2023	$56.56	$9.65	$18.67	$0.00	$84.88
	06/01/2024	$58.04	$9.65	$18.67	$0.00	$86.36
	12/01/2024	$59.51	$9.65	$18.67	$0.00	$87.83
	06/01/2025	$61.01	$9.65	$18.67	$0.00	$89.33
	12/01/2025	$62.51	$9.65	$18.67	$0.00	$90.83
	06/01/2026	$64.06	$9.65	$18.67	$0.00	$92.38
	12/01/2026	$65.56	$9.65	$18.67	$0.00	$93.88
For apprentice rates see "Apprentice- LABORER"						
TUNNEL WORK - COMPRESSED AIR (HAZ. WASTE) *LABORERS (COMPRESSED AIR)*	12/01/2023	$58.56	$9.65	$18.67	$0.00	$86.88
	06/01/2024	$60.04	$9.65	$18.67	$0.00	$88.36
	12/01/2024	$61.51	$9.65	$18.67	$0.00	$89.83
	06/01/2025	$63.01	$9.65	$18.67	$0.00	$91.33
	12/01/2025	$64.51	$9.65	$18.67	$0.00	$92.83
	06/01/2026	$66.06	$9.65	$18.67	$0.00	$94.38
	12/01/2026	$67.56	$9.65	$18.67	$0.00	$95.88
For apprentice rates see "Apprentice- LABORER"						
TUNNEL WORK - FREE AIR *LABORERS (FREE AIR TUNNEL)*	12/01/2023	$48.63	$9.65	$18.67	$0.00	$76.95
	06/01/2024	$50.11	$9.65	$18.67	$0.00	$78.43
	12/01/2024	$51.58	$9.65	$18.67	$0.00	$79.90
	06/01/2025	$53.08	$9.65	$18.67	$0.00	$81.40
	12/01/2025	$54.58	$9.65	$18.67	$0.00	$82.90
	06/01/2026	$56.13	$9.65	$18.67	$0.00	$84.45
	12/01/2026	$57.63	$9.65	$18.67	$0.00	$85.95
For apprentice rates see "Apprentice- LABORER"						
TUNNEL WORK - FREE AIR (HAZ. WASTE) *LABORERS (FREE AIR TUNNEL)*	12/01/2023	$50.63	$9.65	$18.67	$0.00	$78.95
	06/01/2024	$52.11	$9.65	$18.67	$0.00	$80.43
	12/01/2024	$53.58	$9.65	$18.67	$0.00	$81.90
	06/01/2025	$55.08	$9.65	$18.67	$0.00	$83.40
	12/01/2025	$56.58	$9.65	$18.67	$0.00	$84.90
	06/01/2026	$58.13	$9.65	$18.67	$0.00	$86.45
	12/01/2026	$59.63	$9.65	$18.67	$0.00	$87.95
For apprentice rates see "Apprentice- LABORER"						

Classification	Effective Date	Base Wage	Health	Pension	Supplemental Unemployment	Total Rate
VAC-HAUL *TEAMSTERS JOINT COUNCIL NO. 10 ZONE B*	01/01/2024	$39.24	$15.07	$18.67	$0.00	$72.98
	06/01/2024	$40.24	$15.07	$18.67	$0.00	$73.98
	12/01/2024	$40.24	$15.07	$20.17	$0.00	$75.48
	01/01/2025	$40.24	$15.57	$20.17	$0.00	$75.98
	06/01/2025	$41.24	$15.57	$20.17	$0.00	$76.98
	12/01/2025	$41.24	$15.57	$21.78	$0.00	$78.59
	01/01/2026	$41.24	$16.17	$21.78	$0.00	$79.19
	06/01/2026	$42.24	$16.17	$21.78	$0.00	$80.19
	12/01/2026	$42.24	$16.17	$23.52	$0.00	$81.93
	01/01/2027	$42.24	$16.77	$23.52	$0.00	$82.53
WAGON DRILL OPERATOR *LABORERS - ZONE 3 (BUILDING & SITE)*	12/01/2023	$34.38	$9.40	$16.59	$0.00	$60.37
For apprentice rates see "Apprentice- LABORER"						
WAGON DRILL OPERATOR (HEAVY & HIGHWAY) *LABORERS - ZONE 3 (HEAVY & HIGHWAY)*	12/01/2023	$33.88	$9.65	$14.78	$0.00	$58.31
	06/01/2024	$35.08	$9.65	$14.78	$0.00	$59.51
	12/01/2024	$36.28	$9.65	$14.78	$0.00	$60.71
	06/01/2025	$37.53	$9.65	$14.78	$0.00	$61.96
	12/01/2025	$38.77	$9.65	$14.78	$0.00	$63.20
	06/01/2026	$40.07	$9.65	$14.78	$0.00	$64.50
	12/01/2026	$41.36	$9.65	$14.78	$0.00	$65.79
For apprentice rates see "Apprentice- LABORER (Heavy and Highway)"						
WATER METER INSTALLER *PLUMBERS & PIPEFITTERS LOCAL 104*	09/17/2023	$47.96	$9.55	$17.10	$0.00	$74.61
	03/17/2024	$49.21	$9.55	$17.10	$0.00	$75.86
For apprentice rates see "Apprentice- PLUMBER/PIPEFITTER" or "PLUMBER/GASFITTER"						
Outside Electrical - West						
EQUIPMENT OPERATOR *OUTSIDE ELECTRICAL WORKERS - WEST LOCAL 42*	09/01/2019	$44.67	$8.00	$12.55	$0.00	$65.22
For apprentice rates see "Apprentice- LINEMAN"						
GROUNDMAN *OUTSIDE ELECTRICAL WORKERS - WEST LOCAL 42*	09/01/2019	$30.58	$8.00	$5.48	$0.00	$44.06
For apprentice rates see "Apprentice- LINEMAN"						
GROUNDMAN / TRUCK DRIVER *OUTSIDE ELECTRICAL WORKERS - WEST LOCAL 42*	09/01/2019	$39.97	$8.00	$10.96	$0.00	$58.93
For apprentice rates see "Apprentice- LINEMAN"						
HEAVY EQUIPMENT OPERATOR *OUTSIDE ELECTRICAL WORKERS - WEST LOCAL 42*	09/01/2019	$47.01	$8.00	$13.22	$0.00	$68.23
For apprentice rates see "Apprentice- LINEMAN"						
JOURNEYMAN LINEMAN *OUTSIDE ELECTRICAL WORKERS - WEST LOCAL 42*	09/01/2019	$51.71	$8.00	$15.55	$0.00	$75.26

Classification	Effective Date	Base Wage	Health	Pension	Supplemental Unemployment	Total Rate

Apprentice - *LINEMAN (Outside Electrical) - West Local 42*

Effective Date - 09/01/2019

Step	percent	Apprentice Base Wage	Health	Pension	Supplemental Unemployment	Total Rate
1	60	$31.03	$8.00	$3.43	$0.00	$42.46
2	65	$33.61	$8.00	$3.51	$0.00	$45.12
3	70	$36.20	$8.00	$3.59	$0.00	$47.79
4	75	$38.78	$8.00	$5.16	$0.00	$51.94
5	80	$41.37	$8.00	$5.24	$0.00	$54.61
6	85	$43.95	$8.00	$5.32	$0.00	$57.27
7	90	$46.54	$8.00	$7.40	$0.00	$61.94

Notes:

Apprentice to Journeyworker Ratio:1:2

TELEDATA CABLE SPLICER *OUTSIDE ELECTRICAL WORKERS - WEST LOCAL 42*	02/04/2019	$30.73	$4.70	$3.17	$0.00	$38.60
TELEDATA LINEMAN/EQUIPMENT OPERATOR *OUTSIDE ELECTRICAL WORKERS - WEST LOCAL 42*	02/04/2019	$28.93	$4.70	$3.14	$0.00	$36.77
TELEDATA WIREMAN/INSTALLER/TECHNICIAN *OUTSIDE ELECTRICAL WORKERS - WEST LOCAL 42*	02/04/2019	$28.93	$4.70	$3.14	$0.00	$36.77
TRACTOR-TRAILER DRIVER *OUTSIDE ELECTRICAL WORKERS - WEST LOCAL 42*	09/01/2019	$44.67	$8.00	$12.55	$0.00	$65.22

Additional Apprentice Information:

Minimum wage rates for apprentices employed on public works projects are listed above as a percentage of the pre-determined hourly wage rate established by the Commissioner under the provisions of the M.G.L. c. 149, ss. 26-27D. Apprentice ratios are established by the Division of Apprenticeship Training pursuant to M.G.L. c. 23, ss. 11E-11L.

All apprentices must be registered with the Division of Apprenticeship Training in accordance with M.G.L. c. 23, ss. 11E-11L.

All steps are six months (1000 hours.)
Ratios are expressed in allowable number of apprentices to journeymen or fraction thereof, unless otherwise specified.

** Multiple ratios are listed in the comment field.
*** APP to JM; 1:1, 2:2, 2:3, 3:4, 4:4, 4:5, 4:6, 5:7, 6:7, 6:8, 6:9, 7:10, 8:10, 8:11, 8:12, 9:13, 10:13, 10:14, etc.
**** APP to JM; 1:1, 1:2, 2:3, 2:4, 3:5, 4:6, 4:7, 5:8, 6:9, 6:10, 7:11, 8:12, 8:13, 9:14, 10:15, 10:16, etc.

NOTICE: - This is NOT the official version of the Massachusetts General Laws (MGL). While reasonable efforts have been made to assure the accuracy of the data provided, do not rely on this information without first checking an official edition of the MGL.

If you are in need of legal advice or counsel, consult an attorney.

MASSACHUSETTS GENERAL LAWS

(Updated to July 12, 2013)

TABLE OF CONTENTS

CHAPTER 30

39A	MGL - 2
39F	MGL - 2
39I	MGL - 6
39J	MGL - 7
39L	MGL - 8
39M	MGL - 9
39N	MGL - 12
39O	MGL - 13
39P	MGL - 14
39R	MGL - 15

CHAPTER 82

SECTION 40	MGL - 19
SECTION 40A	MGL - 20
SECTION 40B	MGL - 20
SECTION 40C	MGL - 21
SECTION 40D	MGL - 21
SECTION 40E	MGL - 22

CHAPTER 30. GENERAL PROVISIONS RELATIVE TO STATE DEPARTMENTS, COMMISSIONS, OFFICERS AND EMPLOYEES **Chapter 30: Section 38A Price adjustment clause**

Contracts for road, bridge, water, and sewer projects awarded as a result of a proposal or invitation for bids under chapter 7C, section 11C of Chapter 25A, section 39M of this chapter and sections 44A to 44H, inclusive, of chapter 149 shall include a price adjustment clause for each of the following materials: fuel, both diesel and gasoline; asphalt; concrete; and steel. A base price for each material shall be set by the awarding authority or agency and shall be included in the bid documents at the time the project is advertised. The awarding authority or agency shall also identify in the bid documents the price index to be used for each material. The price adjustment clause shall provided for a contract adjustment to be made on a monthly basis when the monthly cost change exceeds plus or minus 5 per cent.

Chapter 30: Section 39F Construction contracts; assignment and subrogation; subcontractor defined; enforcement of claim for direct payment; deposit, reduction of disputed amounts

Section 39F. (1) Every contract awarded pursuant to sections forty-four A to L, inclusive, of chapter one hundred and forty-nine shall contain the following subparagraphs (a) through (i) and every contract awarded pursuant to section thirty-nine M of chapter thirty shall contain the following subparagraphs (a) through (h) and in each case those subparagraphs shall be binding between the general contractor and each subcontractor.

(a) Forthwith after the general contractor receives payment on account of a periodic estimate, the general contractor shall pay to each subcontractor the amount paid for the labor performed and the materials furnished by that subcontractor, less any amount specified in any court proceedings barring such payment and also less any amount claimed due from the subcontractor by the general contractor.

(b) Not later than the sixty-fifth day after each subcontractor substantially completes his work in accordance with the plans and specifications, the entire balance due under the subcontract less amounts retained by the awarding authority as the estimated cost of completing the incomplete and unsatisfactory items of work, shall be due the subcontractor; and the awarding authority shall pay that amount to the general contractor. The general contractor shall forthwith pay to the subcontractor the full amount received from the awarding authority less any amount specified in any court proceedings barring such payment and also less any amount claimed due from the subcontractor by the general contractor.

(c) Each payment made by the awarding authority to the general contractor pursuant to subparagraphs (a) and (b) of this paragraph for the labor performed and the materials

furnished by a subcontractor shall be made to the general contractor for the account of that subcontractor; and the awarding authority shall take reasonable steps to compel the general contractor to make each such payment to each such subcontractor. If the awarding authority has received a demand for direct payment from a subcontractor for any amount which has already been included in a payment to the general contractor or which is to be included in a payment to the general contractor for payment to the subcontractor as provided in subparagraphs (a) and (b), the awarding authority shall act upon the demand as provided in this section.

(d) If, within seventy days after the subcontractor has substantially completed the subcontract work, the subcontractor has not received from the general contractor the balance due under the subcontract including any amount due for extra labor and materials furnished to the general contractor, less any amount retained by the awarding authority as the estimated cost of completing the incomplete and unsatisfactory items of work, the subcontractor may demand direct payment of that balance from the awarding authority. The demand shall be by a sworn statement delivered to or sent by certified mail to the awarding authority, and a copy shall be delivered to or sent by certified mail to the general contractor at the same time. The demand shall contain a detailed breakdown of the balance due under the subcontract and also a statement of the status of completion of the subcontract work. Any demand made after substantial completion of the subcontract work shall be valid even if delivered or mailed prior to the seventieth day after the subcontractor has substantially completed the subcontract work. Within ten days after the subcontractor has delivered or so mailed the demand to the awarding authority and delivered or so mailed a copy to the general contractor, the general contractor may reply to the demand. The reply shall be by a sworn statement delivered to or sent by certified mail to the awarding authority and a copy shall be delivered to or sent by certified mail to the subcontractor at the same time. The reply shall contain a detailed breakdown of the balance due under the subcontract including any amount due for extra labor and materials furnished to the general contractor and of the amount due for each claim made by the general contractor against the subcontractor.

(e) Within fifteen days after receipt of the demand by the awarding authority, but in no event prior to the seventieth day after substantial completion of the subcontract work, the awarding authority shall make direct payment to the subcontractor of the balance due under the subcontract including any amount due for extra labor and materials furnished to the general contractor, less any amount (i) retained by the awarding authority as the estimated cost of completing the incomplete or unsatisfactory items of work, (ii) specified in any court proceedings barring such payment, or (iii) disputed by the general contractor in the sworn reply; provided, that the awarding authority shall not deduct from a direct payment any amount as provided in part (iii) if the reply is not sworn to, or for which the sworn reply does not contain the detailed breakdown required by subparagraph (d). The awarding authority shall make further direct payments to the subcontractor forthwith after the removal of the basis for deductions from direct payments made as provided in parts (i) and (ii) of this subparagraph.

(f) The awarding authority shall forthwith deposit the amount deducted from a direct payment as provided in part (iii) of subparagraph (e) in an interest-bearing joint account in the names of the general contractor and the subcontractor in a bank in Massachusetts selected by the awarding authority or agreed upon by the general contractor and the subcontractor and shall notify the general contractor and the subcontractor of the date of the deposit and the bank receiving the deposit. The bank shall pay the amount in the account, including accrued interest, as provided in an agreement between the general contractor and the subcontractor or as determined by decree of a court of competent jurisdiction.

(g) All direct payments and all deductions from demands for direct payments deposited in an interest-bearing account or accounts in a bank pursuant to subparagraph (f) shall be made out of amounts payable to the general contractor at the time of receipt of a demand for direct payment from a subcontractor and out of amounts which later become payable to the general contractor and in the order of receipt of such demands from subcontractors. All direct payments shall discharge the obligation of the awarding authority to the general contractor to the extent of such payment.

(h) The awarding authority shall deduct from payments to a general contractor amounts which, together with the deposits in interest-bearing accounts pursuant to subparagraph (f), are sufficient to satisfy all unpaid balances of demands for direct payment received from subcontractors. All such amounts shall be earmarked for such direct payments, and the subcontractors shall have a right in such deductions prior to any claims against such amounts by creditors of the general contractor.

(i) If the subcontractor does not receive payment as provided in subparagraph (a) or if the general contractor does not submit a periodic estimate for the value of the labor or materials performed or furnished by the subcontractor and the subcontractor does not receive payment for same when due less the deductions provided for in subparagraph (a), the subcontractor may demand direct payment by following the procedure in subparagraph (d) and the general contractor may file a sworn reply as provided in that same subparagraph. A demand made after the first day of the month following that for which the subcontractor performed or furnished the labor and materials for which the subcontractor seeks payment shall be valid even if delivered or mailed prior to the time payment was due on a periodic estimate from the general contractor. Thereafter the awarding authority shall proceed as provided in subparagraph (e), (f), (g) and (h).

(2) Any assignment by a subcontractor of the rights under this section to a surety company furnishing a bond under the provisions of section twenty-nine of chapter one hundred forty-nine shall be invalid. The assignment and subrogation rights of the surety to amounts included in a demand for direct payment which are in the possession of the awarding authority or which are on deposit pursuant to subparagraph (f) of paragraph (1) shall be subordinate to the rights of all subcontractors who are entitled to be paid under this section and who have not been paid in full.

(3) "Subcontractor" as used in this section (i) for contracts awarded as provided in sections forty-four A to forty-four H, inclusive, of chapter one hundred forty-nine shall mean a person who files a sub-bid and receives a subcontract as a result of that filed sub-bid or who is approved by the awarding authority in writing as a person performing labor or both performing labor and furnishing materials pursuant to a contract with the general contractor, (ii) for contracts awarded as provided in paragraph (a) of section thirty-nine M of chapter thirty shall mean a person approved by the awarding authority in writing as a person performing labor or both performing labor and furnishing materials pursuant to a contract with the general contractor, and (iii) for contracts with the commonwealth not awarded as provided in forty-four A to forty-four H, inclusive, of chapter one hundred forty-nine shall also mean a person contracting with the general contractor to supply materials used or employed in a public works project for a price in excess of five thousand dollars.

(4) A general contractor or a subcontractor shall enforce a claim to any portion of the amount of a demand for direct payment deposited as provided in subparagraph (f) of paragraph 1 by a petition in equity in the superior court against the other and the bank shall not be a necessary party. A subcontractor shall enforce a claim for direct payment or a right to require a deposit as provided in subparagraph (f) of paragraph 1 by a petition in equity in the superior court against the awarding authority and the general contractor shall not be a necessary party. Upon motion of any party the court shall advance for speedy trial any petition filed as provided in this paragraph. Sections fifty-nine and fifty-nine B of chapter two hundred thirty-one shall apply to such petitions. The court shall enter an interlocutory decree upon which execution shall issue for any part of a claim found due pursuant to sections fifty-nine and fifty-nine B and, upon motion of any party, shall advance for speedy trial the petition to collect the remainder of the claim. Any party aggrieved by such interlocutory decree shall have the right to appeal therefrom as from a final decree. The court shall not consolidate for trial the petition of any subcontractor with the petition of one or more subcontractors or the same general contract unless the court finds that a substantial portion of the evidence of the same events during the course of construction (other than the fact that the claims sought to be consolidated arise under the same general contract) is applicable to the petitions sought to be consolidated and that such consolidation will prevent unnecessary duplication of evidence. A decree in any such proceeding shall not include interest on the disputed amount deposited in excess of the interest earned for the period of any such deposit. No person except a subcontractor filing a demand for direct payment for which no funds due the general contractor are available for direct payment shall have a right to file a petition in court of equity against the awarding authority claiming a demand for direct payment is premature and such subcontractor must file the petition before the awarding authority has made a direct payment to the subcontractor and has made a deposit of the disputed portion as provided in part (iii) of subparagraph (e) and in subparagraph (f) of paragraph (1).

(5) In any petition to collect any claim for which a subcontractor has filed a demand for direct payment the court shall, upon motion of the general contractor, reduce by the amount of any deposit of a disputed amount by the awarding authority as provided in part

(iii) of subparagraph (e) and in subparagraph (f) of paragraph (1) any amount held under a trustee writ or pursuant to a restraining order or injunction.

CHAPTER 30. GENERAL PROVISIONS RELATIVE TO STATE DEPARTMENTS, COMMISSIONS, OFFICERS AND EMPLOYEES

Chapter 30: Section 39I Deviations from plans and specifications

Section 39I. Every contractor having a contract for the construction, alteration, maintenance, repair or demolition of, or addition to, any public building or public works for the commonwealth, or of any political subdivision thereof, shall perform all the work required by such contract in conformity with the plans and specifications contained therein. No wilful and substantial deviation from said plans and specifications shall be made unless authorized in writing by the awarding authority or by the engineer or architect in charge of the work who is duly authorized by the awarding authority to approve such deviations. In order to avoid delays in the prosecution of the work required by such contract such deviation from the plans or specifications may be authorized by a written order of the awarding authority or such engineer or architect so authorized to approve such deviation. Within thirty days thereafter, such written order shall be confirmed by a certificate of the awarding authority stating: (1) If such deviation involves any substitution or elimination of materials, fixtures or equipment, the reasons why such materials, fixtures or equipment were included in the first instance and the reasons for substitution or elimination, and, if the deviation is of any other nature, the reasons for such deviation, giving justification therefor; (2) that the specified deviation does not materially injure the project as a whole; (3) that either the work substituted for the work specified is of the same cost and quality, or that an equitable adjustment has been agreed upon between the contracting agency and the contractor and the amount in dollars of said adjustment; and (4) that the deviation is in the best interest of the contracting authority.

Such certificate shall be signed under the penalties of perjury and shall be a permanent part of the file record of the work contracted for.

Whoever violates any provision of this section wilfully and with intent to defraud shall be punished by a fine of not more than five thousand dollars or by imprisonment for not more than six months, or both.

CHAPTER 30. GENERAL PROVISIONS RELATIVE TO STATE DEPARTMENTS, COMMISSIONS, OFFICERS AND EMPLOYEES

Chapter 30: Section 39J Public construction contracts; effect of decisions of contracting body or administrative board

Section 39L. The commonwealth and every county, city, town, district, board, commission or other public body which, as the awarding authority, requests proposals, bids or sub-bids for any work in the construction, reconstruction, alteration, remodeling, repair or demolition of any public building or other public works (1) shall not enter into a contract for the work with, and shall not approve as a subcontractor furnishing labor and materials for a part of the work, a foreign corporation which has not filed with the awarding authority a certificate of the state secretary stating that the corporation has complied with requirements of section 15.03 of subdivision A of Part 15 of chapter 156D and the date of compliance, and further has filed all annual reports required by section 16.22 of subdivision B of Part 16 of said chapter 156D, and (2) shall report to the state secretary and to the department of corporations and taxation any foreign corporation performing work under such contract or subcontract, and any person, other than a corporation, performing work under such contract or subcontract, and residing or having a principal place of business outside the commonwealth.

CHAPTER 30. GENERAL PROVISIONS RELATIVE TO STATE DEPARTMENTS, COMMISSIONS, OFFICERS AND EMPLOYEES

Chapter 30: Section 39L Public construction work by foreign corporations; restrictions and reports

Section 39L. The commonwealth and every county, city, town, district, board, commission or other public body which, as the awarding authority, requests proposals, bids or sub-bids for any work in the construction, reconstruction, alteration, remodeling, repair or demolition of any public building or other public works (1) shall not enter into a contract for the work with, and shall not approve as a subcontractor furnishing labor and materials for a part of the work, a foreign corporation which has not filed with the awarding authority a certificate of the state secretary stating that the corporation has complied with requirements of section 15.03 of subdivision A of Part 15 of chapter 156D and the date of compliance, and further has filed all annual reports required by section 16.22 of subdivision B of Part 16 of said chapter 156D, and (2) shall report to the state secretary and to the department of corporations and taxation any foreign corporation performing work under such contract or subcontract, and any person, other than a corporation, performing work under such contract or subcontract, and residing or having a principal place of business outside the commonwealth.

CHAPTER 30. GENERAL PROVISIONS RELATIVE TO STATE DEPARTMENTS, COMMISSIONS, OFFICERS AND EMPLOYEES

Chapter 30: Section 39M Contracts for construction and materials; manner of awarding

Section 38A. Contracts for road and bridge projects awarded as a result of a proposal or invitation for bids under section 39M shall include a price adjustment clause for each of the following materials: fuel, both diesel and gasoline; asphalt; concrete; and steel. Contracts for water and sewer projects awarded as a result of a proposal or invitation for bids under said section 39M shall include a price adjustment clause for fuel, both diesel and gasoline; liquid asphalt; and portland cement contained in cast-in-place concrete. A base price for each material shall be set by the awarding authority or agency and shall be included in the bid documents at the time the project is advertised. The awarding authority or agency shall also identify in the bid documents the price index to be used for each material. The price adjustment clause shall provide for a contract adjustment to be made on a monthly basis when the monthly cost change exceeds plus or minus 5 per cent.

Section 39M. (a) Every contract for the construction, reconstruction, alteration, remodeling or repair of any public work, or for the purchase of any material, as hereinafter defined, by the commonwealth, or political subdivision thereof, or by any county, city, town, district, or housing authority, and estimated by the awarding authority to cost more than ten thousand dollars, and every contract for the construction, reconstruction, installation, demolition, maintenance or repair of any building by a public agency, as defined by subsection one of section forty-four A of chapter one hundred and forty-nine, estimated to cost more than $25,000 but not more than $100,000, shall be awarded to the lowest responsible and eligible bidder on the basis of competitive bids publicly opened and read by such awarding authority forthwith upon expiration of the time for the filing thereof; provided, however, that such awarding authority may reject any and all bids, if it is in the public interest to do so. Every bid for such contract shall be accompanied by a bid deposit in the form of a bid bond, or cash, or a certified check on, or a treasurer's or cashier's check issued by, a responsible bank or trust company, payable to the awarding authority. The amount of such bid deposit shall be five per cent of the value of the bid. Any person submitting a bid under this section shall, on such bid, certify as follows:

The undersigned certifies under penalties of perjury that this bid is in all respects bona fide, fair and made without collusion or fraud with any other person. As used in this paragraph the word "person" shall mean any natural person, joint venture, partnership, corporation or other business or legal entity.

_____

(Name of person signing bid)

_____

(Company)

This paragraph shall not apply to the award of any contract subject to the provisions of sections forty-four A to forty-four J, inclusive, of chapter one hundred and forty-nine and every such contract shall continue to be awarded as provided therein. In cases of extreme emergency caused by enemy attack, sabotage or other such hostile actions or resulting from an imminent security threat explosion, fire, flood, earthquake, hurricane, tornado or other such catastrophe, an awarding authority may, without competitive bids and notwithstanding any general or specific law, award contracts otherwise subject to this paragraph to perform work and to purchase or rent materials and equipment, all as may be necessary for temporary repair and restoration to service of any and all public work in order to preserve the health and safety of persons or property; provided, that this exception shall not apply to any permanent reconstruction, alteration, remodeling or repair of any public work.

(b) Specifications for such contracts, and specifications for contracts awarded pursuant to the provisions of said sections forty-four A to forty-four L of said chapter one hundred and forty-nine, shall be written to provide for full competition for each item of material to be furnished under the contract; except, however, that said specifications may be otherwise written for sound reasons in the public interest stated in writing in the public records of the awarding authority or promptly given in writing by the awarding authority to anyone making a written request therefor, in either instance such writing to be prepared after reasonable investigation. Every such contract shall provide that an item equal to that named or described in the said specifications may be furnished; and an item shall be considered equal to the item so named or described if, in the opinion of the awarding authority: (1) it is at least equal in quality, durability, appearance, strength and design, (2) it will perform at least equally the function imposed by the general design for the public work being contracted for or the material being purchased, and (3) it conforms substantially, even with deviations, to the detailed requirements for the item in the said specifications. For each item of material the specifications shall provide for either a minimum of three named brands of material or a description of material which can be met by a minimum of three manufacturers or producers, and for the equal of any one of said name or described materials.

(c) The term "lowest responsible and eligible bidder" shall mean the bidder: (1) whose bid is the lowest of those bidders possessing the skill, ability and integrity necessary for the faithful performance of the work; (2) who shall certify, that he is able to furnish labor that can work in harmony with all other elements of labor employed or to be employed in the work; (3) who shall certify that all employees to be employed at the worksite will have successfully completed a course in construction safety and health approved by the United States Occupational Safety and Health Administration that is at least 10 hours in duration at the time the employee begins work and who shall furnish documentation of successful completion of said course with the first certified payroll report for each employee; (4) who, where the provisions of section 8B of chapter 29 apply, shall have been determined to be qualified thereunder; and (5) who obtains within 10 days of the notification of contract award the security by bond required under section 29 of chapter

149; provided that for the purposes of this section the term "security by bond" shall mean the bond of a surety company qualified to do business under the laws of the commonwealth and satisfactory to the awarding authority; provided further, that if there is more than 1 surety company, the surety companies shall be jointly and severally liable.

(d) The provisions of this section shall not apply (1) to the extent that they prevent the approval of such specifications by any contributing federal agency, (2) to materials purchased under specifications of the state department of highways at prices established by the said department pursuant to advertisement and bidding in connection with work to be performed under the provisions of chapter eighty-one or chapter ninety, (3) to any transaction between the commonwealth and any of its political subdivisions or between the commonwealth and any public service corporation, and (4) to any contract of not more than twenty-five thousand dollars awarded by a governmental body, as defined by section two of chapter thirty B, in accordance with the provisions of section five of said chapter thirty B; and (5) to any contract solely for the purchase of material awarded by a governmental body, as defined by section 2 of chapter 30B, in accordance with section 5 of said chapter 30B.

(e) The word "material" as used in this section shall mean and include any article, assembly, system, or any component part thereof.

CHAPTER 30. GENERAL PROVISIONS RELATIVE TO STATE DEPARTMENTS, COMMISSIONS, OFFICERS AND EMPLOYEES

Chapter 30: Section 39N Construction contracts; equitable adjustment in contract price for differing subsurface or latent physical conditions

Section 39N. Every contract subject to section forty-four A of chapter one hundred and forty-nine or subject to section thirty-nine M of chapter thirty shall contain the following paragraph in its entirety and an awarding authority may adopt reasonable rules or regulations in conformity with that paragraph concerning the filing, investigation and settlement of such claims:

If, during the progress of the work, the contractor or the awarding authority discovers that the actual subsurface or latent physical conditions encountered at the site differ substantially or materially from those shown on the plans or indicated in the contract documents either the contractor or the contracting authority may request an equitable adjustment in the contract price of the contract applying to work affected by the differing site conditions. A request for such an adjustment shall be in writing and shall be delivered by the party making such claim to the other party as soon as possible after such conditions are discovered. Upon receipt of such a claim from a contractor, or upon its own initiative, the contracting authority shall make an investigation of such physical conditions, and, if they differ substantially or materially from those shown on the plans or indicated in the contract documents or from those ordinarily encountered and generally recognized as inherent in work of the character provided for in the plans and contract documents and are of such a nature as to cause an increase or decrease in the cost of performance of the work or a change in the construction methods required for the performance of the work which results in an increase or decrease in the cost of the work, the contracting authority shall make an equitable adjustment in the contract price and the contract shall be modified in writing accordingly.

CHAPTER 30. GENERAL PROVISIONS RELATIVE TO STATE DEPARTMENTS, COMMISSIONS, OFFICERS AND EMPLOYEES

Chapter 30: Section 39O Contracts for construction and materials; suspension, delay or interruption due to order of awarding authority; adjustment in contract price; written claim

Section 39*O*. Every contract subject to the provisions of section thirty-nine M of this chapter or subject to section forty-four A of chapter one hundred forty-nine shall contain the following provisions (a) and (b) in their entirety and, in the event a suspension, delay, interruption or failure to act of the awarding authority increases the cost of performance to any subcontractor, that subcontractor shall have the same rights against the general contractor for payment for an increase in the cost of his performance as provisions (a) and (b) give the general contractor against the awarding authority, but nothing in provisions (a) and (b) shall in any way change, modify or alter any other rights which the general contractor or the subcontractor may have against each other.

(a) The awarding authority may order the general contractor in writing to suspend, delay, or interrupt all or any part of the work for such period of time as it may determine to be appropriate for the convenience of the awarding authority; provided however, that if there is a suspension, delay or interruption for fifteen days or more or due to a failure of the awarding authority to act within the time specified in this contract, the awarding authority shall make an adjustment in the contract price for any increase in the cost of performance of this contract but shall not include any profit to the general contractor on such increase; and provided further, that the awarding authority shall not make any adjustment in the contract price under this provision for any suspension, delay, interruption or failure to act to the extent that such is due to any cause for which this contract provides for an equitable adjustment of the contract price under any other contract provisions.

(b) The general contractor must submit the amount of a claim under provision (a) to the awarding authority in writing as soon as practicable after the end of the suspension, delay, interruption or failure to act and, in any event, not later than the date of final payment under this contract and, except for costs due to a suspension order, the awarding authority shall not approve any costs in the claim incurred more than twenty days before the general contractor notified the awarding authority in writing of the act or failure to act involved in the claim.

CHAPTER 30. GENERAL PROVISIONS RELATIVE TO STATE DEPARTMENTS, COMMISSIONS, OFFICERS AND EMPLOYEES

Chapter 30: Section 39P Contracts for construction and materials; awarding authority's decisions on interpretation of specifications, etc.; time limit; notice

Section 39P. Every contract subject to section thirty-nine M of this chapter or section forty-four A of chapter one hundred forty-nine which requires the awarding authority, any official, its architect or engineer to make a decision on interpretation of the specifications, approval of equipment, material or any other approval, or progress of the work, shall require that the decision be made promptly and, in any event, no later than thirty days after the written submission for decision; but if such decision requires extended investigation and study, the awarding authority, the official, architect or engineer shall, within thirty days after the receipt of the submission, give the party making the submission written notice of the reasons why the decision cannot be made within the thirty day period and the date by which the decision will be made.

CHAPTER 30. GENERAL PROVISIONS RELATIVE TO STATE DEPARTMENTS, COMMISSIONS, OFFICERS AND EMPLOYEES

Chapter 30: Section 39R Definitions; contract provisions; management and financial statements; enforcement

Section 39R. (a) The words defined herein shall have the meaning stated below whenever they appear in this section:

(1) "Contractor" means any person, corporation, partnership, joint venture, sole proprietorship, or other entity awarded a contract pursuant to sections thirty-eight A 1/2 to thirty-eight O, inclusive, of chapter seven and any contract awarded or executed pursuant to section eleven C of chapter twenty-five A, section thirty-nine M of chapter thirty, or sections forty-four A to forty-four H, inclusive, of chapter one hundred and forty-nine, which is for an amount or estimated amount greater than one hundred thousand dollars.

(2) "Contract" means any contract awarded or executed pursuant to sections thirty-eight A 1/2 to thirty-eight O, inclusive, of chapter seven and any contract awarded or executed pursuant to section eleven C of chapter twenty-five A, section thirty-nine M of chapter thirty, or sections forty-four A through forty-four H, inclusive, of chapter one hundred and forty-nine, which is for amount or estimated amount greater than one hundred thousand dollars.

(3) "Records" means books of original entry, accounts, checks, bank statements and all other banking documents, correspondence, memoranda, invoices, computer printouts, tapes, discs, papers and other documents or transcribed information of any type, whether expressed in ordinary or machine language.

(4) "Independent Certified Public Accountant" means a person duly registered in good standing and entitled to practice as a certified public accountant under the laws of the place of his residence or principal office and who is in fact independent. In determining whether an accountant is independent with respect to a particular person, appropriate consideration should be given to all relationships between the accountant and that person or any affiliate thereof. Determination of an accountant's independence shall not be confined to the relationships existing in connection with the filing of reports with the awarding authority.

(5) "Audit", when used in regard to financial statements, means an examination of records by an independent certified public accountant in accordance with generally accepted accounting principles and auditing standards for the purpose of expressing a *certified* opinion thereon, or, in the alternative, a qualified opinion or a declination to express an opinion for stated reasons.

(6) "Accountant's Report", when used in regard to financial statements, means a document in which an independent certified public accountant indicates the scope of the audit which he has made and sets forth his opinion regarding the financial statements taken as a whole with a listing of noted exceptions and qualifications, or an assertion to the effect that an overall opinion cannot be expressed. When an overall opinion cannot be expressed the reason therefor shall be stated. An accountant's report shall include as a part thereof a signed statement by the responsible corporate officer attesting that management has fully disclosed all material facts to the independent certified public accountant, and that the audited financial statement is a true and complete statement of the financial condition of the contractor.

(7) "Management", when used herein, means the chief executive officers, partners, principals or other person or persons primarily responsible for the financial and operational policies and practices of the contractor.

(8) Accounting terms, unless otherwise defined herein, shall have a meaning in accordance with generally accepted accounting principles and auditing standards.

(b) Subsection (a)(2) hereof notwithstanding, every agreement or contract awarded or executed pursuant to sections thirty-eight A 1/2 to thirty-eight O, inclusive, of chapter seven, or eleven C of chapter twenty-five A, and pursuant to section thirty-nine M of chapter thirty or to section forty-four A through H, inclusive, of chapter one hundred and forty-nine, shall provide that:

(1) The contractor shall make, and keep for at least six years after final payment, books, records, and accounts which in reasonable detail accurately and fairly reflect the transactions and dispositions of the contractor, and

(2) until the expiration of six years after final payment, the office of inspector general, and the commissioner of capital asset management and maintenance shall have the right to examine any books, documents, papers or records of the contractor or of his subcontractors that directly pertain to, and involve transactions relating to, the contractor or his subcontractors, and

(3) if the agreement is a contract as defined herein, the contractor shall describe any change in the method of maintaining records or recording transactions which materially affect any statements filed with the awarding authority, including in his description the date of the change and reasons therefor, and shall accompany said description with a letter from the contractor's independent certified public accountant approving or otherwise commenting on the changes, and

(4) if the agreement is a contract as defined herein, the contractor has filed a statement of management on internal accounting controls as set forth in paragraph (c) below prior to the execution of the contract, and

(5) if the agreement is a contract as defined herein, the contractor has filed prior to the execution of the contracts and will continue to file annually, an audited financial statement for the most recent completed fiscal year as set forth in paragraph (d) below.

(c) Every contractor awarded a contract shall file with the awarding authority a statement of management as to whether the system of internal accounting controls of the contractor and its subsidiaries reasonably assures that:

(1) transactions are executed in accordance with management's general and specific authorization;

(2) transactions are recorded as necessary

i. to permit preparation of financial statements in conformity with generally accepted accounting principles, and

ii. to maintain accountability for assets;

(3) access to assets is permitted only in accordance with management's general or specific authorization; and

(4) the recorded accountability for assets is compared with the existing assets at reasonable intervals and appropriate action was taken with respect to any difference.

Every contractor awarded a contract shall also file with the awarding authority a statement prepared and signed by an independent certified public accountant, stating that he has examined the statement of management on internal accounting controls, and expressing an opinion as to

(1) whether the representations of management in response to this paragraph and paragraph (b) above are consistent with the result of management's evaluation of the system of internal accounting controls; and

(2) whether such representations of management are, in addition, reasonable with respect to transactions and assets in amounts which would be material when measured in relation to the applicant's financial statements.

(d) Every contractor awarded a contract by the commonwealth or by any political subdivision thereof shall annually file with the commissioner of capital asset management and maintenance during the term of the contract a financial statement prepared by an independent certified public accountant on the basis of an audit by such accountant. The final statement filed shall include the date of final payment. All statements shall be accompanied by an accountant's report. Such statements shall be made available to the awarding authority upon request.

(e) The office of inspector general, the commissioner of capital asset management and maintenance and any other awarding authority shall enforce the provisions of this section. The commissioner of capital asset management and maintenance may after providing an opportunity for the inspector general and other interested parties to comment, promulgate pursuant to the provisions of chapter thirty A such rules, regulations and guidelines as are necessary to effectuate the purposes of this section. Such rules, regulations and guidelines may be applicable to all awarding authorities. A contractor's failure to satisfy any of the requirements of this section may be grounds for debarment pursuant to section forty-four C of chapter one hundred and forty-nine.

(f) Records and statements required to be made, kept or filed under the provisions of this section shall not be public records as defined in section seven of chapter four and shall not be open to public inspection; provided, however, that such records and statements shall be made available pursuant to the provisions of clause (2) of paragraph (b).

CHAPTER 82. THE LAYING OUT, ALTERATION, RELOCATION AND DISCONTINUANCE OF PUBLIC WAYS, AND SPECIFIC REPAIRS THEREON

EXCAVATIONS; NOTICES; PENALTIES

Chapter 82: Section 40 Definitions

Section 40. The following words, as used in this section and sections 40A to 40E, inclusive, shall have the following meanings:—

"Company", natural gas pipeline company, petroleum or petroleum products pipeline company, public utility company, cable television company, and municipal utility company or department that supply gas, electricity, telephone, communication or cable television services or private water companies within the city or town where such excavation is to be made.

"Description of excavation location", such description shall include the name of the city or town, street, way, or route number where appropriate, the name of the streets at the nearest intersection to the excavation, the number of the buildings closest to the excavation or any other description, including landmarks, utility pole numbers or other information which will accurately define the location of the excavation.

"Emergency", a condition in which the safety of the public is in imminent danger, such as a threat to life or health or where immediate correction is required to maintain or restore essential public utility service.

"Excavation", an operation for the purpose of movement or removal of earth, rock or the materials in the ground including, but not limited to, digging, blasting, augering, backfilling, test boring, drilling, pile driving, grading, plowing in, hammering, pulling in, jacking in, trenching, tunneling and demolition of structures, excluding excavation by tools manipulated only by human power for gardening purposes and use of blasting for quarrying purposes.

"Excavator", any entity including, but not limited to, a person, partnership, joint venture, trust, corporation, association, public utility, company or state or local government body which performs excavation operations.

"Premark", to delineate the general scope of the excavation or boring on the paved surface of the ground using white paint, or stakes or other suitable white markings on nonpaved surfaces. No premarking shall be acceptable if such marks can reasonably interfere with traffic or pedestrian control or are misleading to the general public. Premarking shall not be required of any continuous excavation that is over 500 feet in length.

"Safety zone", a zone designated on the surface by the use of standard color-coded markings which contains the width of the facilities plus not more than 18 inches on each side.

"Standard color-coded markings", red - electric power lines, cables, conduit or light cables; yellow - gas, oil, street petroleum, or other gaseous materials; orange - communications cables or conduit, alarm or signal lines; blue - water, irrigation and slurry lines; green - sewer and drain lines; white - premark of proposed excavation.

"System", the underground plant damage prevention system as defined in section 76D of chapter 164.

Chapter 82: Section 40A Excavations; notice

Section 40A. No excavator installing a new facility or an addition to an existing facility or the relay or repair of an existing facility shall, except in an emergency, make an excavation, in any public or private way, any company right-of-way or easement or any public or privately owned land or way, unless at least 72 hours, exclusive of Saturdays, Sundays and legal holidays but not more than 30 days before the proposed excavation is to be made, such excavator has premarked not more than 500 feet of the proposed excavation and given an initial notice to the system. Such initial notice shall set forth a description of the excavation location in the manner as herein defined. In addition, such initial notice shall indicate whether any such excavation will involve blasting and, if so, the date and the location at which such blasting is to occur.

The notice requirements shall be waived in an emergency as defined herein; provided, however, that before such excavation begins or during a life-threatening emergency, notification shall be given to the system and the initial point of boring or excavation shall be premarked. The excavator shall ensure that the underground facilities of the utilities in the area of such excavation shall not be damaged or jeopardized.

In no event shall any excavation by blasting take place unless notice thereof, either in the initial notice or a subsequent notice accurately specifying the date and location of such blasting shall have been given and received at least 72 hours in advance, except in the case of an unanticipated obstruction requiring blasting when such notice shall be not less than four hours prior to such blasting. If any such notice cannot be given as aforesaid because of an emergency requiring blasting, it shall be given as soon as may be practicable but before any explosives are discharged.

Chapter 82: Section 40B Designation of location of underground facilities

Section 40B. Within 72 hours, exclusive of Saturdays, Sundays and legal holidays, from the time the initial notice is received by the system or at such time as the company and the excavator agree, such company shall respond to the initial notice or subsequent notice by designating the location of the underground facilities within 15 feet in any direction of

the premarking so that the existing facilities are to be found within a safety zone. Such safety zone shall be so designated by the use of standard color-coded markings. The providing of such designation by the company shall constitute prima facie evidence of an exercise of reasonable precaution by the company as required by this section; provided, however, that in the event that the excavator has given notice as aforesaid at a location at which because of the length of excavation the company cannot reasonably designate the entire location of its facilities within such 72 hour period, then such excavator shall identify for the company that portion of the excavation which is to be first made and the company shall designate the location of its facilities in such portion within 72 hours and shall designate the location of its facilities in the remaining portion of the location within a reasonable time thereafter. When an emergency notification has been given to the system, the company shall make every attempt to designate its facilities as promptly as possible.

Chapter 82: Section 40C Excavator's responsibility to maintain designation markings; damage caused by excavator

Section 40C. After a company has designated the location of its facilities at the location in accordance with section 40B, the excavator shall be responsible for maintaining the designation markings at such locations, unless such excavator requests remarking at the location due to the obliteration, destruction or other removal of such markings. The company shall then remark such location within 24 hours following receipt of such request.

When excavating in close proximity to the underground facilities of any company when such facilities are to be exposed, non-mechanical means shall be employed, as necessary, to avoid damage in locating such facility and any further excavation shall be performed employing reasonable precautions to avoid damage to any underground facilities including, but not limited to, any substantial weakening of structural or lateral support of such facilities, penetration or destruction of any pipe, main, wire or conduit or the protective coating thereof, or damage to any pipe, main, wire or conduit.

If any damage to such pipe, main, wire or conduit or its protective coating occurs, the company shall be notified immediately by the excavator responsible for causing such damage.

The making of an excavation without providing the notice required by section 40A with respect to any proposed excavation which results in any damage to a pipe, main, wire or conduit, or its protective coating, shall be prima facie evidence in any legal or administrative proceeding that such damage was caused by the negligence of such person.

Chapter 82: Section 40D Local laws requiring excavation permits; public ways

Section 40D. Nothing in this section shall affect or impair local ordinances or by-laws requiring a permit to be obtained before excavation in a public way or on private property; but notwithstanding any general or special law, ordinance or by-law to the contrary, to the extent that any permit issued under the provisions of the state building code or state fire code requires excavation by an excavator on a public way or on private property, the permit shall not be valid unless the excavator notifies the system as required pursuant to sections 40 and 40A, before the commencement of the excavation, and has complied with the permitting requirements of chapter 82A.

Chapter 82: Section 40D Section 40E Violations of Secs. 40A to 40E; punishment

Section 40E. Any person or company found by the department of telecommunications and energy, after a hearing, to have violated any provision of sections 40A to 40E, inclusive, shall be fined $1,000 for the first offense and not less than $5,000 nor more than $10,000 for any subsequent offense within 12 consecutive months as set forth by the rules of said department; provided, however, that nothing herein shall be construed to require forfeiture of any penal sum by a state or local government body for violation of section 40A or 40C; and provided, further, that nothing herein shall be construed to require the forfeiture of any penal sum by a residential property owner for the failure to premark for an excavation on such person's residential property.

Davis Bacon Act Requirements

All construction projects are subject to the Davis Bacon wage rate requirements and must include the appropriate sections of the following document in its entirety in the contract documents.

The vast majority of SRF projects will be bid by Governmental Entities (i.e., Cities, Towns, Authorities, Water Districts, Wastewater Districts). These projects must include the following language in construction contracts:

I.3. Contract and Subcontract Provisions
I.4. Contract Provisions for Contracts in Excess of $100,000 (if applicable)
I.5. Compliance Verification

This language may be found on pages DB-3-DB-11.

In certain cases, SRF projects may be bid by non-Governmental Entities (i.e., private water companies, private PWSs, etc.). These projects must include the following language in construction contracts:

II.3. Contract and Subcontract Provisions
II.4. Contract Provisions for Contracts in Excess of $100,000 (if applicable)
II.5. Compliance Verification

This language my be found on pages DB-11-DB-21

Preamble

With respect to the Clean Water and Safe Drinking Water State revolving Funds, EPA provides capitalization grants to each State which in turn provides subgrants or loans to eligible entities within the State. Typically, the subrecipients are municipal or other local governmental entities that manage the funds. For these types of recipients, the provisions set forth under Roman Numeral I, below, shall apply. Although EPA and the State remain responsible for ensuring subrecipients' compliance with the wage rate requirements set forth herein, those subrecipients shall have the primary responsibility to maintain payroll records as described in Section 3(ii)(A), below and for compliance as described in Section I-5.

Occasionally, the subrecipient may be a private for profit or not for profit entity. For these types of recipients, the provisions set forth in Roman Numeral II, below, shall apply. Although EPA and the State remain responsible for ensuring subrecipients' compliance with the wage rate requirements set forth herein, those subrecipients shall have the primary responsibility to maintain payroll records as described in Section II-3(ii)(A), below and for compliance as described in Section II-5.

I. Requirements For Subrecipients That Are Governmental Entities:

The following terms and conditions specify how recipients will assist EPA in meeting its Davis-Bacon (DB) responsibilities when DB applies to EPA awards of financial assistance with respect to State recipients and subrecipients that are governmental entities. If a subrecipient has

questions regarding when DB applies, obtaining the correct DB wage determinations, DB provisions, or compliance monitoring, it may contact the State recipient. If a State recipient needs guidance, the recipient may contact Valerie Marshall at EPA Region 1 (617-918-1674) for guidance. The recipient or subrecipient may also obtain additional guidance from DOL's web site at https://www.dol.gov/whd/govcontracts/dbra.htm

1. Applicability of the Davis- Bacon (DB) prevailing wage requirements.

DB prevailing wage requirements apply to the construction, alteration, and repair of treatment works carried out in whole or in part with assistance made available by a State water pollution control revolving fund and to any construction project carried out in whole or in part by assistance made available by a drinking water treatment revolving loan fund. If a subrecipient encounters a unique situation at a site that presents uncertainties regarding DB applicability, the subrecipient must discuss the situation with the recipient State before authorizing work on that site.

2. Obtaining Wage Determinations.

(a) Subrecipients shall obtain the wage determination for the locality in which a covered activity subject to DB will take place prior to issuing requests for bids, proposals, quotes or other methods for soliciting contracts (solicitation) for activities subject to DB. These wage determinations shall be incorporated into solicitations and any subsequent contracts. Prime contracts must contain a provision requiring that subcontractors follow the wage determination incorporated into the prime contract.

(i) While the solicitation remains open, the subrecipient shall monitor www.wdol.gov weekly to ensure that the wage determination contained in the solicitation remains current. The subrecipients shall amend the solicitation if DOL issues a modification more than 10 days prior to the closing date (i.e. bid opening) for the solicitation. If DOL modifies or supersedes the applicable wage determination less than 10 days prior to the closing date, the subrecipients may request a finding from the State recipient that there is not a reasonable time to notify interested contractors of the modification of the wage determination. The State recipient will provide a report of its findings to the subrecipient.

(ii) If the subrecipient does not award the contract within 90 days of the closure of the solicitation, any modifications or supersedes DOL makes to the wage determination contained in the solicitation shall be effective unless the State recipient, at the request of the subrecipient, obtains an extension of the 90 day period from DOL pursuant to 29 CFR 1.6(c)(3)(iv). The subrecipient shall monitor www.wdol.gov on a weekly basis if it does not award the contract within 90 days of closure of the solicitation to ensure that wage determinations contained in the solicitation remain current.

(b) If the subrecipient carries out activity subject to DB by issuing a task order, work assignment or similar instrument to an existing contractor (ordering instrument) rather than by publishing a solicitation, the subrecipient shall insert the appropriate DOL wage determination from www.wdol.gov into the ordering instrument.

(c) Subrecipients shall review all subcontracts subject to DB entered into by prime contractors to verify that the prime contractor has required its subcontractors to include the applicable wage determinations.

(d) As provided in 29 CFR 1.6(f), DOL may issue a revised wage determination applicable to a subrecipient's contract after the award of a contract or the issuance of an ordering instrument if DOL determines that the subrecipient has failed to incorporate a wage determination or has used a wage determination that clearly does not apply to the contract or ordering instrument. If this occurs, the subrecipient shall either terminate the contract or ordering instrument and issue a revised solicitation or ordering instrument or incorporate DOL's wage determination retroactive to the beginning of the contract or ordering instrument by change order. The subrecipient's contractor must be compensated for any increases in wages resulting from the use of DOL's revised wage determination.

3. Contract and Subcontract provisions.

(a) The Recipient shall insure that the subrecipient(s) shall insert in full in any contract in excess of $2,000 which is entered into for the actual construction, alteration and/or repair, including painting and decorating, of a treatment work under the CWSRF or a construction project under the DWSRF financed in whole or in part from Federal funds or in accordance with guarantees of a Federal agency or financed from funds obtained by pledge of any contract of a Federal agency to make a loan, grant or annual contribution (except where a different meaning is expressly indicated), and which is subject to the labor standards provisions of any of the acts listed in § 5.1 or the FY 2012 Appropriations Act, the following clauses:

(1) Minimum wages.

(i) All laborers and mechanics employed or working upon the site of the work will be paid unconditionally and not less often than once a week, and without subsequent deduction or rebate on any account (except such payroll deductions as are permitted by regulations issued by the Secretary of Labor under the Copeland Act (29 CFR part 3)), the full amount of wages and bona fide fringe benefits (or cash equivalents thereof) due at time of payment computed at rates not less than those contained in the wage determination of the Secretary of Labor which is attached hereto and made a part hereof, regardless of any contractual relationship which may be alleged to exist between the contractor and such laborers and mechanics.

Contributions made or costs reasonably anticipated for bona fide fringe benefits under section 1(b)(2) of the Davis-Bacon Act on behalf of laborers or mechanics are considered wages paid to such laborers or mechanics, subject to the provisions of paragraph (a)(1)(iv) of this section; also, regular contributions made or costs incurred for more than a weekly period (but not less often than quarterly) under plans, funds, or programs which cover the particular weekly period, are deemed to be constructively made or incurred during such weekly period. Such laborers and mechanics shall be paid the appropriate wage rate and fringe benefits on the wage determination for the classification of work actually performed, without regard to skill, except as provided in §5.5(a)(4). Laborers or mechanics performing work in more than one classification may be compensated at the rate specified for each classification for the time actually worked therein:

Provided, that the employer's payroll records accurately set forth the time spent in each classification in which work is performed. The wage determination (including any additional classification and wage rates conformed under paragraph (a)(1)(ii) of this section) and the Davis-Bacon poster (WH-1321) shall be posted at all times by the contractor and its subcontractors at the site of the work in a prominent and accessible place where it can be easily seen by the workers. Subrecipients may obtain wage determinations from the U.S. Department of Labor's web site, www.dol.gov.

(ii)(A) The subrecipient(s), on behalf of EPA, shall require that any class of laborers or mechanics, including helpers, which is not listed in the wage determination and which is to be employed under the contract shall be classified in conformance with the wage determination. The State award official shall approve a request for an additional classification and wage rate and fringe benefits therefore only when the following criteria have been met:

(1) The work to be performed by the classification requested is not performed by a classification in the wage determination; and

(2) The classification is utilized in the area by the construction industry; and

(3) The proposed wage rate, including any bona fide fringe benefits, bears a reasonable relationship to the wage rates contained in the wage determination.

(B) If the contractor and the laborers and mechanics to be employed in the classification (if known), or their representatives, and the subrecipient(s) agree on the classification and wage rate (including the amount designated for fringe benefits where appropriate), documentation of the action taken and the request, including the local wage determination shall be sent by the subrecipient (s) to the State award official. The State award official will transmit the request, to the Administrator of the Wage and Hour Division, Employment Standards Administration, U.S. Department of Labor, Washington, DC 20210 and to the EPA DB Regional Coordinator concurrently. The Administrator, or an authorized representative, will approve, modify, or disapprove every additional classification request within 30 days of receipt and so advise the State award official or will notify the State award official within the 30-day period that additional time is necessary.

(C) In the event the contractor, the laborers or mechanics to be employed in the classification or their representatives, and the subrecipient(s) do not agree on the proposed classification and wage rate (including the amount designated for fringe benefits, where appropriate), the award official shall refer the request and the local wage determination, including the views of all interested parties and the recommendation of the State award official, to the Administrator for determination. The request shall be sent to the EPA DB Regional Coordinator concurrently. The Administrator, or an authorized representative, will issue a determination within 30 days of receipt of the request and so advise the contracting officer or will notify the contracting officer within the 30-day period that additional time is necessary.

(D) The wage rate (including fringe benefits where appropriate) determined pursuant to paragraphs (a)(1)(ii)(B) or (C) of this section, shall be paid to all workers performing work in the classification under this contract from the first day on which work is performed in the classification.

(iii) Whenever the minimum wage rate prescribed in the contract for a class of laborers or mechanics includes a fringe benefit which is not expressed as an hourly rate, the contractor shall either pay the benefit as stated in the wage determination or shall pay another bona fide fringe benefit or an hourly cash equivalent thereof.

(iv) If the contractor does not make payments to a trustee or other third person, the contractor may consider as part of the wages of any laborer or mechanic the amount of any costs reasonably anticipated in providing bona fide fringe benefits under a plan or program, Provided, That the
Secretary of Labor has found, upon the written request of the contractor, that the applicable standards of the Davis-Bacon Act have been met. The Secretary of Labor may require the contractor to set aside in a separate account assets for the meeting of obligations under the plan or program.

(2) Withholding. The subrecipient(s), shall upon written request of the EPA Award Official or an authorized representative of the Department of Labor, withhold or cause to be withheld from the contractor under this contract or any other Federal contract with the same prime contractor, or any other federally-assisted contract subject to Davis-Bacon prevailing wage requirements, which is held by the same prime contractor, so much of the accrued payments or advances as may be considered necessary to pay laborers and mechanics, including apprentices, trainees, and helpers, employed by the contractor or any subcontractor the full amount of wages required by the contract. In the event of failure to pay any laborer or mechanic, including any apprentice, trainee, or helper, employed or working on the site of the work, all or part of the wages required by the contract, the (Agency) may, after written notice to the contractor, sponsor, applicant, or owner, take such action as may be necessary to cause the suspension of any further payment, advance, or guarantee of funds until such violations have ceased.

(3) Payrolls and basic records.

(i) Payrolls and basic records relating thereto shall be maintained by the contractor during the course of the work and preserved for a period of three years thereafter for all laborers and mechanics working at the site of the work. Such records shall contain the name, address, and social security number of each such worker, his or her correct classification, hourly rates of wages paid (including rates of contributions or costs anticipated for bona fide fringe benefits or cash equivalents thereof of the types described in section 1(b)(2)(B) of the Davis-Bacon Act), daily and weekly number of hours worked, deductions made and actual wages paid. Whenever the Secretary of Labor has found under 29 CFR 5.5(a)(1)(iv) that the wages of any laborer or mechanic include the amount of any costs reasonably anticipated in providing benefits under a plan or program described in section 1(b)(2)(B) of the Davis-Bacon Act, the contractor shall maintain records which show that the commitment to provide such benefits is enforceable, that the plan or program is financially responsible, and that the plan or program has been communicated in writing to the laborers or mechanics affected, and records which show the costs anticipated or the actual cost incurred in providing such benefits. Contractors employing apprentices or trainees under approved programs shall maintain written evidence of the registration of apprenticeship programs and certification of trainee programs, the registration of the apprentices and trainees, and the ratios and wage rates prescribed in the applicable programs.

(ii)(A) The contractor shall submit weekly, for each week in which any contract work is performed, a copy of all payrolls to the subrecipient, that is, the entity that receives the sub-grant or loan from the State capitalization grant recipient. Such documentation shall be available on request of the State recipient or EPA. As to each payroll copy received, the subrecipient shall provide written confirmation in a form satisfactory to the State indicating whether or not the project is in compliance with the requirements of 29 CFR 5.5(a)(1) based on the most recent payroll copies for the specified week. The payrolls shall set out accurately and completely all of the information required to be maintained under 29 CFR 5.5(a)(3)(i), except that full social security numbers and home addresses shall not be included on the weekly payrolls. Instead the payrolls shall only need to include an individually identifying number for each employee (e.g., the last four digits of the employee's social security number). The required weekly payroll information may be submitted in any form desired. Optional Form WH-347 is available for this purpose from the Wage and Hour Division Web site at https://www.dol.gov/whd/forms/wh347.pdf or its successor site. The prime contractor is responsible for the submission of copies of payrolls by all subcontractors. Contractors and subcontractors shall maintain the full social security number and current address of each covered worker, and shall provide them upon request to the subrecipient(s) for transmission to the State or EPA if requested by EPA , the State, the contractor, or the Wage and Hour Division of the Department of Labor for purposes of an investigation or audit of compliance with prevailing wage requirements. It is not a violation of this section for a prime contractor to require a subcontractor to provide addresses and social security numbers to the prime contractor for its own records, without weekly submission to the subrecipient(s).

(B) Each payroll submitted shall be accompanied by a "Statement of Compliance," signed by the contractor or subcontractor or his or her agent who pays or supervises the payment of the persons employed under the contract and shall certify the following:

(1) That the payroll for the payroll period contains the information required to be provided under § 5.5 (a)(3)(ii) of Regulations, 29 CFR part 5, the appropriate information is being maintained under § 5.5 (a)(3)(i) of Regulations, 29 CFR part 5, and that such information is correct and complete;

(2) That each laborer or mechanic (including each helper, apprentice, and trainee) employed on the contract during the payroll period has been paid the full weekly wages earned, without rebate, either directly or indirectly, and that no deductions have been made either directly or indirectly from the full wages earned, other than permissible deductions as set forth in Regulations, 29 CFR part 3;

(3) That each laborer or mechanic has been paid not less than the applicable wage rates and fringe benefits or cash equivalents for the classification of work performed, as specified in the applicable wage determination incorporated into the contract.

(C) The weekly submission of a properly executed certification set forth on the reverse side of Optional Form WH-347 shall satisfy the requirement for submission of the "Statement of Compliance" required by paragraph (a)(3)(ii)(B) of this section.

(D) The falsification of any of the above certifications may subject the contractor or subcontractor to civil or criminal prosecution under section 1001 of title 18 and section 231 of title 31 of the United States Code.

(iii) The contractor or subcontractor shall make the records required under paragraph (a)(3)(i) of this section available for inspection, copying, or transcription by authorized representatives of the State, EPA or the Department of Labor, and shall permit such representatives to interview employees during working hours on the job. If the contractor or subcontractor fails to submit the required records or to make them available, the Federal agency or State may, after written notice to the contractor, sponsor, applicant, or owner, take such action as may be necessary to cause the suspension of any further payment, advance, or guarantee of funds. Furthermore, failure to submit the required records upon request or to make such records available may be grounds for debarment action pursuant to 29 CFR 5.12.

(4) Apprentices and trainees--

(i) Apprentices. Apprentices will be permitted to work at less than the predetermined rate for the work they performed when they are employed pursuant to and individually registered in a bona fide apprenticeship program registered with the U.S. Department of Labor, Employment and Training Administration, Office of Apprenticeship Training, Employer and Labor Services, or with a State Apprenticeship Agency recognized by the Office, or if a person is employed in his or her first 90 days of probationary employment as an apprentice in such an apprenticeship program, who is not individually registered in the program, but who has been certified by the Office of Apprenticeship Training, Employer and Labor Services or a State Apprenticeship Agency (where appropriate) to be eligible for probationary employment as an apprentice. The allowable ratio of apprentices to journeymen on the job site in any craft classification shall not be greater than the ratio permitted to the contractor as to the entire work force under the registered program. Any worker listed on a payroll at an apprentice wage rate, who is not registered or otherwise employed as stated above, shall be paid not less than the applicable wage rate on the wage determination for the classification of work actually performed. In addition, any apprentice performing work on the job site in excess of the ratio permitted under the registered program shall be paid not less than the applicable wage rate on the wage determination for the work actually performed. Where a contractor is performing construction on a project in a locality other than that in which its program is registered, the ratios and wage rates (expressed in percentages of the journeyman's hourly rate) specified in the contractor's or subcontractor's registered program shall be observed. Every apprentice must be paid at not less than the rate specified in the registered program for the apprentice's level of progress, expressed as a percentage of the journeymen hourly rate specified in the applicable wage determination. Apprentices shall be paid fringe benefits in accordance with the provisions of the apprenticeship program. If the apprenticeship program does not specify fringe benefits, apprentices must be paid the full amount of fringe benefits listed on the wage determination for the applicable classification. If the Administrator determines that a different practice prevails for the applicable apprentice classification, fringes shall be paid in accordance with that determination. In the event the Office of Apprenticeship Training, Employer and Labor Services, or a State Apprenticeship Agency recognized by the Office, withdraws approval of an apprenticeship program, the contractor will no longer be permitted to utilize apprentices at less than the applicable predetermined rate for the work performed until an acceptable program is approved.

(ii) Trainees. Except as provided in 29 CFR 5.16, trainees will not be permitted to work at less than the predetermined rate for the work performed unless they are employed pursuant to and individually registered in a program which has received prior approval, evidenced by formal certification by the U.S. Department of Labor, Employment and Training Administration. The ratio of trainees to journeymen on the job site shall not be greater than permitted under the plan approved by the Employment and Training Administration. Every trainee must be paid at not less than the rate specified in the approved program for the trainee's level of progress, expressed as a percentage of the journeyman hourly rate specified in the applicable wage determination. Trainees shall be paid fringe benefits in accordance with the provisions of the trainee program. If the trainee program does not mention fringe benefits, trainees shall be paid the full amount of fringe benefits listed on the wage determination unless the Administrator of the Wage and Hour Division determines that there is an apprenticeship program associated with the corresponding journeyman wage rate on the wage determination which provides for less than full fringe benefits for apprentices. Any employee listed on the payroll at a trainee rate who is not registered and participating in a training plan approved by the Employment and Training Administration shall be paid not less than the applicable wage rate on the wage determination for the classification of work actually performed. In addition, any trainee performing work on the job site in excess of the ratio permitted under the registered program shall be paid not less than the applicable wage rate on the wage determination for the work actually performed. In the event the Employment and Training Administration withdraws approval of a training program, the contractor will no longer be permitted to utilize trainees at less than the applicable predetermined rate for the work performed until an acceptable program is approved.

(iii) Equal employment opportunity. The utilization of apprentices, trainees and journeymen under this part shall be in conformity with the equal employment opportunity requirements of Executive Order 11246, as amended, and 29 CFR part 30.

(5) Compliance with Copeland Act requirements. The contractor shall comply with the requirements of 29 CFR part 3, which are incorporated by reference in this contract.

(6) Subcontracts. The contractor or subcontractor shall insert in any subcontracts the clauses contained in 29 CFR 5.5(a)(1) through (10) and such other clauses as the EPA determines may by appropriate, and also a clause requiring the subcontractors to include these clauses in any lower tier subcontracts. The prime contractor shall be responsible for the compliance by any subcontractor or lower tier subcontractor with all the contract clauses in 29 CFR 5.5.

(7) Contract termination; debarment. A breach of the contract clauses in 29 CFR 5.5 may be grounds for termination of the contract, and for debarment as a contractor and a subcontractor as provided in 29 CFR 5.12.

(8) Compliance with Davis-Bacon and Related Act requirements. All rulings and interpretations of the Davis-Bacon and Related Acts contained in 29 CFR parts 1, 3, and 5 are herein incorporated by reference in this contract.

(9) Disputes concerning labor standards. Disputes arising out of the labor standards provisions of this contract shall not be subject to the general disputes clause of this contract. Such disputes shall be resolved in accordance with the procedures of the Department of Labor set forth in 29

CFR parts 5, 6, and 7. Disputes within the meaning of this clause include disputes between the contractor (or any of its subcontractors) and Subrecipient(s), State, EPA, the U.S. Department of Labor, or the employees or their representatives.

(10) Certification of eligibility.

(i) By entering into this contract, the contractor certifies that neither it (nor he or she) nor any person or firm who has an interest in the contractor's firm is a person or firm ineligible to be awarded Government contracts by virtue of section 3(a) of the Davis-Bacon Act or 29 CFR 5.12(a)(1).

(ii) No part of this contract shall be subcontracted to any person or firm ineligible for award of a Government contract by virtue of section 3(a) of the Davis-Bacon Act or 29 CFR 5.12(a)(1).

(iii) The penalty for making false statements is prescribed in the U.S. Criminal Code, 18 U.S.C. 1001.

4. Contract Provision for Contracts in Excess of $100,000.

(a) Contract Work Hours and Safety Standards Act. The subrecipient shall insert the following clauses set forth in paragraphs (a)(1), (2), (3), and (4) of this section in full in any contract in an amount in excess of $100,000 and subject to the overtime provisions of the Contract Work Hours and Safety Standards Act. These clauses shall be inserted in addition to the clauses required by Item 3, above or 29 CFR 4.6. As used in this paragraph, the terms laborers and mechanics include watchmen and guards.

(1) Overtime requirements. No contractor or subcontractor contracting for any part of the contract work which may require or involve the employment of laborers or mechanics shall require or permit any such laborer or mechanic in any workweek in which he or she is employed on such work to work in excess of forty hours in such workweek unless such laborer or mechanic receives compensation at a rate not less than one and one-half times the basic rate of pay for all hours worked in excess of forty hours in such workweek.

(2) Violation; liability for unpaid wages; liquidated damages. In the event of any violation of the clause set forth in paragraph (a)(1) of this section the contractor and any subcontractor responsible therefore shall be liable for the unpaid wages. In addition, such contractor and subcontractor shall be liable to the United States (in the case of work done under contract for the District of Columbia or a territory, to such District or to such territory), for liquidated damages. Such liquidated damages shall be computed with respect to each individual laborer or mechanic, including watchmen and guards, employed in violation of the clause set forth in paragraph (a)(1) of this section, in the sum of $10 for each calendar day on which such individual was required or permitted to work in excess of the standard workweek of forty hours without payment of the overtime wages required by the clause set forth in paragraph (a)(1) of this section.

(3) Withholding for unpaid wages and liquidated damages. The subrecipient**,** upon written request of the EPA Award Official or an authorized representative of the Department of Labor, shall withhold or cause to be withheld, from any moneys payable on account of work performed by the contractor or subcontractor under any such contract or any other

Federal contract with the same prime contractor, or any other federally-assisted contract subject to the Contract Work Hours and Safety Standards Act, which is held by the same prime contractor, such sums as may be determined to be necessary to satisfy any liabilities of such contractor or subcontractor for unpaid wages and liquidated damages as provided in the clause set forth in paragraph (b)(2) of this section.

(4) Subcontracts. The contractor or subcontractor shall insert in any subcontracts the clauses set forth in paragraph (a)(1) through (4) of this section and also a clause requiring the subcontractors to include these clauses in any lower tier subcontracts. The prime contractor shall be responsible for compliance by any subcontractor or lower tier subcontractor with the clauses set forth in paragraphs (a)(1) through (4) of this section.

(b) In addition to the clauses contained in Item 3, above, in any contract subject only to the Contract Work Hours and Safety Standards Act and not to any of the other statutes cited in 29 CFR 5.1, the Subrecipient shall insert a clause requiring that the contractor or subcontractor shall maintain payrolls and basic payroll records during the course of the work and shall preserve them for a period of three years from the completion of the contract for all laborers and mechanics, including guards and watchmen, working on the contract. Such records shall contain the name and address of each such employee, social security number, correct classifications, hourly rates of wages paid, daily and weekly number of hours worked, deductions made, and actual wages paid. Further, the Subrecipient shall insert in any such contract a clause providing that the records to be maintained under this paragraph shall be made available by the contractor or subcontractor for inspection, copying, or transcription by authorized representatives of the (write the name of agency) and the Department of Labor, and the contractor or subcontractor will permit such representatives to interview employees during working hours on the job.

5. Compliance Verification

(a) The subrecipient shall periodically interview a sufficient number of employees entitled to DB prevailing wages (covered employees) to verify that contractors or subcontractors are paying the appropriate wage rates. As provided in 29 CFR 5.6(a)(6), all interviews must be conducted in confidence. The subrecipient must use Standard Form 1445 (SF 1445) or equivalent documentation to memorialize the interviews. Copies of the SF 1445 are available from EPA on request.

(b) The subrecipient shall establish and follow an interview schedule based on its assessment of the risks of noncompliance with DB posed by contractors or subcontractors and the duration of the contract or subcontract. At a minimum, the subrecipient should conduct interviews with a representative group of covered employees within two weeks of each contractor or subcontractor's submission of its initial weekly payroll data and two weeks prior to the estimated completion date for the contract or subcontract. Subrecipients must conduct more frequent interviews if the initial interviews or other information indicates that there is a risk that the contractor or subcontractor is not complying with DB. Subrecipients shall immediately conduct necessary interviews in response to an alleged violation of the prevailing wage requirements. All interviews shall be conducted in confidence.

(c) The subrecipient shall periodically conduct spot checks of a representative sample of weekly payroll data to verify that contractors or subcontractors are paying the appropriate wage rates. The subrecipient shall establish and follow a spot check schedule based on its

assessment of the risks of noncompliance with DB posed by contractors or subcontractors and the duration of the contract or subcontract. At a minimum, if practicable, the subrecipient should spot check payroll data within two weeks of each contractor or subcontractor's submission of its initial payroll data and two weeks prior to the completion date the contract or subcontract. Subrecipients must conduct more frequent spot checks if the initial spot check or other information indicates that there is a risk that the contractor or subcontractor is not complying with DB. In addition, during the examinations the subrecipient shall verify evidence of fringe benefit plans and payments thereunder by contractors and subcontractors who claim credit for fringe benefit contributions.

(d) The subrecipient shall periodically review contractors and subcontractors use of apprentices and trainees to verify registration and certification with respect to apprenticeship and training programs approved by either the U.S Department of Labor or a state, as appropriate, and that contractors and subcontractors are not using disproportionate numbers of, laborers, trainees and apprentices. These reviews shall be conducted in accordance with the schedules for spot checks and interviews described in Item 5(b) and (c) above.

(e) Subrecipients must immediately report potential violations of the DB prevailing wage requirements to the EPA DB contact listed above and to the appropriate DOL Wage and Hour District Office listed at https://www.dol.gov/whd/whd_district_offices.pdf.

II. Requirements For Subrecipients That Are Not Governmental Entities

The following terms and conditions specify how recipients will assist EPA in meeting its DB responsibilities when DB applies to EPA awards of financial assistance with respect to subrecipients that are not governmental entities. If a subrecipient has questions regarding when DB applies, obtaining the correct DB wage determinations, DB provisions, or compliance monitoring, it may contact the State recipient for guidance. If a State recipient needs guidance, the recipient may contact Valerie Marshall at EPA Region 1 (617-918-1674) for guidance. The recipient or subrecipient may also obtain additional guidance from DOL's web site at https://www.dol.gov/whd/govcontracts/dbra.htm

Under these terms and conditions, the subrecipient must submit its proposed DB wage determinations to the State recipient for approval prior to including the wage determination in any solicitation, contract task orders, work assignments, or similar instruments to existing contractors.

1. Applicability of the Davis- Bacon (DB) prevailing wage requirements.

DB prevailing wage requirements apply to the construction, alteration, and repair of treatment works carried out in whole or in part with assistance made available by a State water pollution control revolving fund and to any construction project carried out in whole or in part by assistance made available by a drinking water treatment revolving loan fund. If a subrecipient encounters a unique situation at a site that presents uncertainties regarding DB applicability, the subrecipient must discuss the situation with the recipient State before authorizing work on that site.

2. Obtaining Wage Determinations.

(a) Subrecipients must obtain proposed wage determinations for specific localities at www.wdol.gov. After the Subrecipient obtains its proposed wage determination, it must submit the wage determination to (insert contact information for State recipient DB point of contact for wage determination) for approval prior to inserting the wage determination into a solicitation, contract or issuing task orders, work assignments or similar instruments to existing contractors (ordering instruments unless subsequently directed otherwise by the State recipient Award Official.

(b) Subrecipients shall obtain the wage determination for the locality in which a covered activity subject to DB will take place prior to issuing requests for bids, proposals, quotes or other methods for soliciting contracts (solicitation) for activities subject to DB. These wage determinations shall be incorporated into solicitations and any subsequent contracts. Prime contracts must contain a provision requiring that subcontractors follow the wage determination incorporated into the prime contract.

(i) While the solicitation remains open, the subrecipient shall monitor www.wdol.gov. on a weekly basis to ensure that the wage determination contained in the solicitation remains current. The subrecipients shall amend the solicitation if DOL issues a modification more than 10 days prior to the closing date (i.e. bid opening) for the solicitation. If DOL modifies or supersedes the applicable wage determination less than 10 days prior to the closing date, the subrecipients may request a finding from the State recipient that there is not a reasonable time to notify interested contractors of the modification of the wage determination. The State recipient will provide a report of its findings to the subrecipient.

(ii) If the subrecipient does not award the contract within 90 days of the closure of the solicitation, any modifications or supersedes DOL makes to the wage determination contained in the solicitation shall be effective unless the State recipient, at the request of the subrecipient, obtains an extension of the 90 day period from DOL pursuant to 29 CFR 1.6(c)(3)(iv). The subrecipient shall monitor www.wdol.gov on a weekly basis if it does not award the contract within 90 days of closure of the solicitation to ensure that wage determinations contained in the solicitation remain current.

(c) If the subrecipient carries out activity subject to DB by issuing a task order, work assignment or similar instrument to an existing contractor (ordering instrument) rather than by publishing a solicitation, the subecipient shall insert the appropriate DOL wage determination from www.wdol.gov into the ordering instrument.

(d) Subrecipients shall review all subcontracts subject to DB entered into by prime contractors to verify that the prime contractor has required its subcontractors to include the applicable wage determinations.

(e) As provided in 29 CFR 1.6(f), DOL may issue a revised wage determination applicable to a subrecipient's contract after the award of a contract or the issuance of an ordering instrument if DOL determines that the subrecipient has failed to incorporate a wage determination or has used a wage determination that clearly does not apply to the contract or ordering instrument. If this occurs, the subecipient shall either terminate the contract or ordering instrument and issue a revised solicitation or ordering instrument or incorporate DOL's wage determination retroactive to the beginning of the contract or ordering instrument by change order. The subrecipient's contractor must be compensated for any increases in wages resulting from the use of DOL's revised wage determination.

3. Contract and Subcontract provisions.

(a) The Recipient shall insure that the subrecipient(s) shall insert in full in any contract in excess of $2,000 which is entered into for the actual construction, alteration and/or repair, including painting and decorating, of a treatment work under the CWSRF or a construction project under the DWSRF financed in whole or in part from Federal funds or in accordance with guarantees of a Federal agency or financed from funds obtained by pledge of any contract of a Federal agency to make a loan, grant or annual contribution (except where a different meaning is expressly indicated), and which is subject to the labor standards provisions of any of the acts listed in § 5.1 or the FY 2011 Full-Year Continuing Appropriation, the following clauses:

(1) Minimum wages.

(i) All laborers and mechanics employed or working upon the site of the work, will be paid unconditionally and not less often than once a week, and without subsequent deduction or rebate on any account (except such payroll deductions as are permitted by regulations issued by the Secretary of Labor under the Copeland Act (29 CFR part 3)), the full amount of wages and bona fide fringe benefits (or cash equivalents thereof) due at time of payment computed at rates not less than those contained in the wage determination of the Secretary of Labor which is attached hereto and made a part hereof, regardless of any contractual relationship which may be alleged to exist between the contractor and such laborers and mechanics. Contributions made or costs reasonably anticipated for bona fide fringe benefits under section 1(b)(2) of the Davis-Bacon Act on behalf of laborers or mechanics are considered wages paid to such laborers or mechanics, subject to the provisions of paragraph (a)(1)(iv) of this section; also, regular contributions made or costs incurred for more than a weekly period (but not less often than quarterly) under plans, funds, or programs which cover the particular weekly period, are deemed to be constructively made or incurred during such weekly period. Such laborers and mechanics shall be paid the appropriate wage rate and fringe benefits on the wage determination for the classification of work actually performed, without regard to skill, except as provided in §5.5(a)(4). Laborers or mechanics performing work in more than one classification may be compensated at the rate specified for each classification for the time actually worked therein: Provided, that the employer's payroll records accurately set forth the time spent in each classification in which work is performed. The wage determination (including any additional classification and wage rates conformed under paragraph (a)(1)(ii) of this section) and the Davis-Bacon poster (WH-1321) shall be posted at all times by the contractor and its subcontractors at the site of the work in a prominent and accessible place where it can be easily seen by the workers. Subrecipients may obtain wage determinations from the U.S. Department of Labor's web site, www.dol.gov.

(ii)(A) The subrecipient(s), on behalf of EPA, shall require that any class of laborers or mechanics, including helpers, which is not listed in the wage determination and which is to be employed under the contract shall be classified in conformance with the wage determination. The State award official shall approve a request for an additional classification and wage rate and fringe benefits therefore only when the following criteria have been met:

(1) The work to be performed by the classification requested is not performed by a classification in the wage determination; and

(2) The classification is utilized in the area by the construction industry; and

(3) The proposed wage rate, including any bona fide fringe benefits, bears a reasonable relationship to the wage rates contained in the wage determination.

(B) If the contractor and the laborers and mechanics to be employed in the classification (if known), or their representatives, and the subrecipient(s) agree on the classification and wage rate (including the amount designated for fringe benefits where appropriate), documentation of the action taken and the request, including the local wage determination shall be sent by the subrecipient(s) to the State award official. The State award official will transmit the report, to the Administrator of the Wage and Hour Division, Employment Standards Administration, U.S. Department of Labor, Washington, DC 20210 and to the EPA DB Regional Coordinator concurrently. The Administrator, or an authorized representative, will approve, modify, or disapprove every additional classification request within 30 days of receipt and so advise the State award official or will notify the State award official within the 30-day period that additional time is necessary.

(C) In the event the contractor, the laborers or mechanics to be employed in the classification or their representatives, and the and the subrecipient(s) do not agree on the proposed classification and wage rate (including the amount designated for fringe benefits, where appropriate), the award official shall refer the request, and the local wage determination, including the views of all interested parties and the recommendation of the State award official, to the Administrator for determination. The request shall be sent to the EPA Regional Coordinator concurrently. The Administrator, or an authorized representative, will issue a determination within 30 days of receipt of the request and so advise the contracting officer or will notify the contracting officer within the 30-day period that additional time is necessary.

(D) The wage rate (including fringe benefits where appropriate) determined pursuant to paragraphs (a)(1)(ii)(B) or (C) of this section, shall be paid to all workers performing work in the classification under this contract from the first day on which work is performed in the classification.

(iii) Whenever the minimum wage rate prescribed in the contract for a class of laborers or mechanics includes a fringe benefit which is not expressed as an hourly rate, the contractor shall either pay the benefit as stated in the wage determination or shall pay another bona fide fringe benefit or an hourly cash equivalent thereof.

(iv) If the contractor does not make payments to a trustee or other third person, the contractor may consider as part of the wages of any laborer or mechanic the amount of any costs reasonably anticipated in providing bona fide fringe benefits under a plan or program, Provided, That the
Secretary of Labor has found, upon the written request of the contractor, that the applicable standards of the Davis-Bacon Act have been met. The Secretary of Labor may require the contractor to set aside in a separate account assets for the meeting of obligations under the plan or program.

(2) Withholding. The subrecipient(s) shall upon written request of the EPA Award Official or an authorized representative of the Department of Labor, withhold or cause to be withheld from the contractor under this contract or any other Federal contract with the same prime contractor, or any other federally-assisted contract subject to Davis-Bacon prevailing wage requirements, which is held by the same prime contractor, so much of the accrued payments or advances as may be considered necessary to pay laborers and mechanics, including apprentices, trainees, and helpers, employed by the contractor or any subcontractor the full amount of wages required by the contract. In the event of failure to pay any laborer or mechanic, including any apprentice, trainee, or helper, employed or working on the site of the work, all or part of the wages required by the contract, the (Agency) may, after written notice to the contractor, sponsor, applicant, or owner, take such action as may be necessary to cause the suspension of any further payment, advance, or guarantee of funds until such violations have ceased.

(3) Payrolls and basic records.

(i) Payrolls and basic records relating thereto shall be maintained by the contractor during the course of the work and preserved for a period of three years thereafter for all laborers and mechanics working at the site of the work. Such records shall contain the name, address, and social security number of each such worker, his or her correct classification, hourly rates of wages paid (including rates of contributions or costs anticipated for bona fide fringe benefits or cash equivalents thereof of the types described in section 1(b)(2)(B) of the Davis-Bacon Act), daily and weekly number of hours worked, deductions made and actual wages paid. Whenever the Secretary of Labor has found under 29 CFR 5.5(a)(1)(iv) that the wages of any laborer or mechanic include the amount of any costs reasonably anticipated in providing benefits under a plan or program described in section 1(b)(2)(B) of the Davis-Bacon Act, the contractor shall maintain records which show that the commitment to provide such benefits is enforceable, that the plan or program is financially responsible, and that the plan or program has been communicated in writing to the laborers or mechanics affected, and records which show the costs anticipated or the actual cost incurred in providing such benefits. Contractors employing apprentices or trainees under approved programs shall maintain written evidence of the registration of apprenticeship programs and certification of trainee programs, the registration of the apprentices and trainees, and the ratios and wage rates prescribed in the applicable programs.

(ii)(A) The contractor shall submit weekly, for each week in which any contract work is performed, a copy of all payrolls to the subrecipient, that is, the entity that receives the sub-grant or loan from the State capitalization grant recipient. Such documentation shall be available on request of the State recipient or EPA. As to each payroll copy received, the subrecipient shall provide written confirmation in a form satisfactory to the State indicating whether or not the project is in compliance with the requirements of 29 CFR 5.5(a)(1) based on the most recent payroll copies for the specified week. The payrolls shall set out accurately and completely all of the information required to be maintained under 29 CFR 5.5(a)(3)(i), except that full social security numbers and home addresses shall not be included on the weekly payrolls. Instead the payrolls shall only need to include an individually identifying number for each employee (e.g., the last four digits of the employee's social security number). The required weekly payroll information may be submitted in any form desired. Optional Form WH-347 is

available for this purpose from the Wage and Hour Division Web site at https://www.dol.gov/whd/forms/wh347.pdf or its successor site. The prime contractor is responsible for the submission of copies of payrolls by all subcontractors. Contractors and subcontractors shall maintain the full social security number and current address of each covered worker, and shall provide them upon request to the subrecipient(s) for transmission to the State or EPA if requested by EPA , the State, the contractor, or the Wage and Hour Division of the Department of Labor for purposes of an investigation or audit of compliance with prevailing wage requirements. It is not a violation of this section for a prime contractor to require a subcontractor to provide addresses and social security numbers to the prime contractor for its own records, without weekly submission to the subrecipient(s).

(B) Each payroll submitted shall be accompanied by a "Statement of Compliance," signed by the contractor or subcontractor or his or her agent who pays or supervises the payment of the persons employed under the contract and shall certify the following:

(1) That the payroll for the payroll period contains the information required to be provided under § 5.5 (a)(3)(ii) of Regulations, 29 CFR part 5, the appropriate information is being maintained under § 5.5 (a)(3)(i) of Regulations, 29 CFR part 5, and that such information is correct and complete;

(2) That each laborer or mechanic (including each helper, apprentice, and trainee) employed on the contract during the payroll period has been paid the full weekly wages earned, without rebate, either directly or indirectly, and that no deductions have been made either directly or indirectly from the full wages earned, other than permissible deductions as set forth in Regulations, 29 CFR part 3;

(3) That each laborer or mechanic has been paid not less than the applicable wage rates and fringe benefits or cash equivalents for the classification of work performed, as specified in the applicable wage determination incorporated into the contract.

(C) The weekly submission of a properly executed certification set forth on the reverse side of Optional Form WH-347 shall satisfy the requirement for submission of the "Statement of Compliance" required by paragraph (a)(3)(ii)(B) of this section.

(D) The falsification of any of the above certifications may subject the contractor or subcontractor to civil or criminal prosecution under section 1001 of title 18 and section 231 of title 31 of the United States Code.

(iii) The contractor or subcontractor shall make the records required under paragraph (a)(3)(i) of this section available for inspection, copying, or transcription by authorized representatives of the State, EPA or the Department of Labor, and shall permit such representatives to interview employees during working hours on the job. If the contractor or subcontractor fails to submit the required records or to make them available, the Federal agency or State may, after written notice to the contractor, sponsor, applicant, or owner, take such action as may be necessary to cause the suspension of any further payment, advance, or guarantee of funds. Furthermore, failure to submit the required records upon request or to make such records available may be grounds for debarment action pursuant to 29 CFR 5.12.

(4) Apprentices and trainees--

(i) Apprentices. Apprentices will be permitted to work at less than the predetermined rate for the work they performed when they are employed pursuant to and individually registered in a bona fide apprenticeship program registered with the U.S. Department of Labor, Employment and Training Administration, Office of Apprenticeship Training, Employer and Labor Services, or with a State Apprenticeship Agency recognized by the Office, or if a person is employed in his or her first 90 days of probationary employment as an apprentice in such an apprenticeship program, who is not individually registered in the program, but who has been certified by the Office of Apprenticeship Training, Employer and Labor Services or a State Apprenticeship Agency (where appropriate) to be eligible for probationary employment as an apprentice. The allowable ratio of apprentices to journeymen on the job site in any craft classification shall not be greater than the ratio permitted to the contractor as to the entire work force under the registered program. Any worker listed on a payroll at an apprentice wage rate, who is not registered or otherwise employed as stated above, shall be paid not less than the applicable wage rate on the wage determination for the classification of work actually performed. In addition, any apprentice performing work on the job site in excess of the ratio permitted under the registered program shall be paid not less than the applicable wage rate on the wage determination for the work actually performed. Where a contractor is performing construction on a project in a locality other than that in which its program is registered, the ratios and wage rates (expressed in percentages of the journeyman's hourly rate) specified in the contractor's or subcontractor's registered program shall be observed. Every apprentice must be paid at not less than the rate specified in the registered program for the apprentice's level of progress, expressed as a percentage of the journeymen hourly rate specified in the applicable wage determination. Apprentices shall be paid fringe benefits in accordance with the provisions of the apprenticeship program. If the apprenticeship program does not specify fringe benefits, apprentices must be paid the full amount of fringe benefits listed on the wage determination for the applicable classification. If the Administrator determines that a different practice prevails for the applicable apprentice classification, fringes shall be paid in accordance with that determination. In the event the Office of Apprenticeship Training, Employer and Labor Services, or a State Apprenticeship Agency recognized by the Office, withdraws approval of an apprenticeship program, the contractor will no longer be permitted to utilize apprentices at less than the applicable predetermined rate for the work performed until an acceptable program is approved.

(ii) Trainees. Except as provided in 29 CFR 5.16, trainees will not be permitted to work at less than the predetermined rate for the work performed unless they are employed pursuant to and individually registered in a program which has received prior approval, evidenced by formal certification by the U.S. Department of Labor, Employment and Training Administration. The ratio of trainees to journeymen on the job site shall not be greater than permitted under the plan approved by the Employment and Training Administration. Every trainee must be paid at not less than the rate specified in the approved program for the trainee's level of progress, expressed as a percentage of the journeyman hourly rate specified in the applicable wage determination. Trainees shall be paid fringe benefits in accordance with the provisions of the trainee program. If the trainee program does not mention fringe benefits, trainees shall be paid the full amount of

fringe benefits listed on the wage determination unless the Administrator of the Wage and Hour Division determines that there is an apprenticeship program associated with the corresponding journeyman wage rate on the wage determination which provides for less than full fringe benefits for apprentices. Any employee listed on the payroll at a trainee rate who is not registered and participating in a training plan approved by the Employment and Training Administration shall be paid not less than the applicable wage rate on the wage determination for the classification of work actually performed. In addition, any trainee performing work on the job site in excess of the ratio permitted under the registered program shall be paid not less than the applicable wage rate on the wage determination for the work actually performed. In the event the Employment and Training Administration withdraws approval of a training program, the contractor will no longer be permitted to utilize trainees at less than the applicable predetermined rate for the work performed until an acceptable program is approved.

(iii) Equal employment opportunity. The utilization of apprentices, trainees and journeymen under this part shall be in conformity with the equal employment opportunity requirements of Executive Order 11246, as amended, and 29 CFR part 30.

(5) Compliance with Copeland Act requirements. The contractor shall comply with the requirements of 29 CFR part 3, which are incorporated by reference in this contract.

(6) Subcontracts. The contractor or subcontractor shall insert in any subcontracts the clauses contained in 29 CFR 5.5(a)(1) through (10) and such other clauses as the EPA determines may by appropriate, and also a clause requiring the subcontractors to include these clauses in any lower tier subcontracts. The prime contractor shall be responsible for the compliance by any subcontractor or lower tier subcontractor with all the contract clauses in 29 CFR 5.5.

(7) Contract termination: debarment. A breach of the contract clauses in 29 CFR 5.5 may be grounds for termination of the contract, and for debarment as a contractor and a subcontractor as provided in 29 CFR 5.12.

(8) Compliance with Davis-Bacon and Related Act requirements. All rulings and interpretations of the Davis-Bacon and Related Acts contained in 29 CFR parts 1, 3, and 5 are herein incorporated by reference in this contract.

(9) Disputes concerning labor standards. Disputes arising out of the labor standards provisions of this contract shall not be subject to the general disputes clause of this contract. Such disputes shall be resolved in accordance with the procedures of the Department of Labor set forth in 29
CFR parts 5, 6, and 7. Disputes within the meaning of this clause include disputes between the contractor (or any of its subcontractors) and Subrecipient(s), State, EPA, the U.S. Department of Labor, or the employees or their representatives.

(10) Certification of eligibility.

(i) By entering into this contract, the contractor certifies that neither it (nor he or she) nor any person or firm who has an interest in the contractor's firm is a person or firm ineligible to be awarded Government contracts by virtue of section 3(a) of the Davis-Bacon Act or 29 CFR 5.12(a)(1).

(ii) No part of this contract shall be subcontracted to any person or firm ineligible for award of a Government contract by virtue of section 3(a) of the Davis-Bacon Act or 29 CFR 5.12(a)(1).

(iii) The penalty for making false statements is prescribed in the U.S. Criminal Code, 18 U.S.C. 1001.

4. Contract Provision for Contracts in Excess of $100,000.

(a) Contract Work Hours and Safety Standards Act. The subrecipient shall insert the following clauses set forth in paragraphs (a)(1), (2), (3), and (4) of this section in full in any contract in an amount in excess of $100,000 and subject to the overtime provisions of the Contract Work Hours and Safety Standards Act. These clauses shall be inserted in addition to the clauses required by Item 3, above or 29 CFR 4.6. As used in this paragraph, the terms laborers and mechanics include watchmen and guards.

(1) Overtime requirements. No contractor or subcontractor contracting for any part of the contract work which may require or involve the employment of laborers or mechanics shall require or permit any such laborer or mechanic in any workweek in which he or she is employed on such work to work in excess of forty hours in such workweek unless such laborer or mechanic receives compensation at a rate not less than one and one-half times the basic rate of pay for all hours worked in excess of forty hours in such workweek.

(2) Violation; liability for unpaid wages; liquidated damages. In the event of any violation of the clause set forth in paragraph (b)(1) of this section the contractor and any subcontractor responsible therefore shall be liable for the unpaid wages. In addition, such contractor and subcontractor shall be liable to the United States (in the case of work done under contract for the District of Columbia or a territory, to such District or to such territory), for liquidated damages. Such liquidated damages shall be computed with respect to each individual laborer or mechanic, including watchmen and guards, employed in violation of the clause set forth in paragraph (b)(1) of this section, in the sum of $10 for each calendar day on which such individual was required or permitted to work in excess of the standard workweek of forty hours without payment of the overtime wages required by the clause set forth in paragraph (b)(1) of this section.

(3) Withholding for unpaid wages and liquidated damages. The subrecipient shall upon the request of the EPA Award Official or an authorized representative of the Department of Labor, withhold or cause to be withheld, from any moneys payable on account of work performed by the contractor or subcontractor under any such contract or any other Federal contract with the same prime contractor, or any other federally-assisted contract subject to the Contract Work Hours and Safety Standards Act, which is held by the same prime contractor, such sums as may be determined to be necessary to satisfy any liabilities of such contractor or subcontractor for unpaid wages and liquidated damages as provided in the clause set forth in paragraph (b)(2) of this section.

(4) Subcontracts. The contractor or subcontractor shall insert in any subcontracts the clauses set forth in paragraph (b)(1) through (4) of this section and also a clause requiring the subcontractors to include these clauses in any lower tier subcontracts. The prime contractor shall be responsible for compliance by any subcontractor or lower tier subcontractor with the clauses set forth in paragraphs (b)(1) through (4) of this section.

(c) In addition to the clauses contained in Item 3, above, in any contract subject only to the Contract Work Hours and Safety Standards Act and not to any of the other statutes cited in 29 CFR 5.1, the Subrecipient shall insert a clause requiring that the contractor or subcontractor shall maintain payrolls and basic payroll records during the course of the work and shall preserve them for a period of three years from the completion of the contract for all laborers and mechanics, including guards and watchmen, working on the contract. Such records shall contain the name and address of each such employee, social security number, correct classifications, hourly rates of wages paid, daily and weekly number of hours worked, deductions made, and actual wages paid. Further, the Subrecipient shall insert in any such contract a clause providing that the records to be maintained under this paragraph shall be made available by the contractor or subcontractor for inspection, copying, or transcription by authorized representatives of the (write the name of agency) and the Department of Labor, and the contractor or subcontractor will permit such representatives to interview employees during working hours on the job.

5. Compliance Verification

(a). The subrecipient shall periodically interview a sufficient number of employees entitled to DB prevailing wages (covered employees) to verify that contractors or subcontractors are paying the appropriate wage rates. As provided in 29 CFR 5.6(a)(6), all interviews must be conducted in confidence. The subrecipient must use Standard Form 1445 (SF 1445) or equivalent documentation to memorialize the interviews. Copies of the SF 1445 are available from EPA on request.

(b) The subrecipient shall establish and follow an interview schedule based on its assessment of the risks of noncompliance with DB posed by contractors or subcontractors and the duration of the contract or subcontract. At a minimum, the subrecipient should conduct interviews with a representative group of covered employees within two weeks of each contractor or subcontractor's submission of its initial weekly payroll data and two weeks prior to the estimated completion date for the contract or subcontract. Subrecipients must conduct more frequent interviews if the initial interviews or other information indicates that there is a risk that the contractor or subcontractor is not complying with DB. Subrecipients shall immediately conduct necessary interviews in response to an alleged violation of the prevailing wage requirements. All interviews shall be conducted in confidence.

(c). The subrecipient shall periodically conduct spot checks of a representative sample of weekly payroll data to verify that contractors or subcontractors are paying the appropriate wage rates. The subrecipient shall establish and follow a spot check schedule based on its assessment of the risks of noncompliance with DB posed by contractors or subcontractors and the duration of the contract or subcontract. At a minimum, if practicable the subrecipient should spot check payroll data within two weeks of each contractor or subcontractor's submission of its initial payroll data and two weeks prior to the completion date the contract or subcontract. Subrecipients must conduct more frequent spot checks if the initial spot check or other information indicates that there is a risk that the contractor or subcontractor is not complying with DB . In addition, during the examinations the subrecipient shall verify evidence of fringe benefit plans and payments thereunder by contractors and subcontractors who claim credit for fringe benefit contributions.

(d). The subrecipient shall periodically review contractors and subcontractors use of apprentices and trainees to verify registration and certification with respect to apprenticeship and training programs approved by either the U.S Department of Labor or a state, as appropriate, and that contractors and subcontractors are not using disproportionate numbers of, laborers, trainees and apprentices. These reviews shall be conducted in accordance with the schedules for spot checks and interviews described in Item 5(b) and (c) above.

(e) Subrecipients must immediately report potential violations of the DB prevailing wage requirements to the EPA DB contact listed above and to the appropriate DOL Wage and Hour District Office listed at https://www.dol.gov/whd/whd_district_offices.pdf.

"General Decision Number: MA20240010 02/09/2024

Superseded General Decision Number: MA20230010

State: Massachusetts

Construction Types: Heavy (Heavy and Marine)

Counties: Berkshire, Franklin, Hampden and Hampshire Counties in Massachusetts.

HEAVY CONSTRUCTION PROJECTS; AND MARINE CONSTRUCTION PROJECTS

Note: Contracts subject to the Davis-Bacon Act are generally required to pay at least the applicable minimum wage rate required under Executive Order 14026 or Executive Order 13658. Please note that these Executive Orders apply to covered contracts entered into by the federal government that are subject to the Davis-Bacon Act itself, but do not apply to contracts subject only to the Davis-Bacon Related Acts, including those set forth at 29 CFR 5.1(a)(1).

If the contract is entered into on or after January 30, 2022, or the contract is renewed or extended (e.g., an option is exercised) on or after January 30, 2022:	Executive Order 14026 generally applies to the contract. The contractor must pay all covered workers at least $17.20 per hour (or the applicable wage rate listed on this wage determination, if it is higher) for all hours spent performing on the contract in 2024.	
If the contract was awarded on or between January 1, 2015 and January 29, 2022, and the contract is not renewed or extended on or after January 30, 2022:	Executive Order 13658 generally applies to the contract. The contractor must pay all covered workers at least $12.90 per hour (or the applicable wage rate listed on this wage determination, if it is higher) for all hours spent performing on that contract in 2024.	

The applicable Executive Order minimum wage rate will be adjusted annually. If this contract is covered by one of the Executive Orders and a classification considered necessary for performance of work on the contract does not appear on this wage determination, the contractor must still submit a conformance request.

Additional information on contractor requirements and worker protections under the Executive Orders is available at http://www.dol.gov/whd/govcontracts.

Modification Number	Publication Date
0	01/05/2024
1	01/19/2024
2	02/09/2024

BOIL0029-001 01/01/2021

Rates Fringes

BOILERMAKER.....$ 45.87 29.02 ----------
---------- BRMA0001-005 02/01/2023

SPRINGFIELD CHAPTER

Rates Fringes

BRICKLAYER
BRICKLAYERS; CEMENT
MASONS; PLASTERERS; STONE
MASONS; MARBLE, TILE &
TERRAZZO WORKERS.....$ 48.76 32.27 BRICKLAYERS; CEMENT
MASONS; STONE MASONS;
MARBLE, TILE & TERRAZO.....$ 41.96 29.80 ----------
---------- BRMA0001-007 02/01/2023

SPRINGFIELD/PITTSFIELD CHAPTER
BERKSHIRE COUNTY

Rates Fringes

BRICKLAYER
BRICKLAYERS; CEMENT
MASONS; PLASTERERS; STONE
MASONS; MARBLE, TILE &
TERRAZZO WORKERS.....$ 48.76 32.27 ----------
---------- CARP0056-004 08/01/2022

Rates Fringes

DIVER TENDER.....$ 52.15 34.10 DIVER
.....$ 68.70 35.57 ----------
---------- CARP0056-009 08/01/2020

Rates Fringes

PILEDRIVERMAN.....$ 49.07 35.57 ----------
---------- CARP0336-005 11/01/2023

FRANKLIN COUNTY (Erving, Orange, North Orange, and Warwick)

Rates Fringes

CARPENTER.....$ 40.51 26.19 ----------
---------- CARP0336-010 11/01/2023

BERKSHIRE

Rates Fringes

CARPENTER.....$ 40.51 26.19 ----------
---------- CARP0336-012 11/01/2023

HAMPDEN; HAMPSHIRE; AND FRANKLIN (Remainder of County)

Rates Fringes

CARPENTER.....$ 40.51 26.19 ----------
---------- * CARP1121-004 01/01/2024

Rates Fringes

MILLWRIGHT.....$ 41.20 32.99 ----------
---------- ELEC0007-002 07/02/2023

HAMPDEN (Except Chester & Holyoke); HAMPSHIRE (Belchertown, Ware)

Rates Fringes

ELECTRICIAN.....$ 48.01 27.71 ----------
---------- ELEC0007-003 07/02/2023

BERKSHIRE; FRANKLIN; HAMPDEN (Chester, Holyoke); HAMPSHIRE (Except Belchertown, Ware)

Rates Fringes

ELECTRICIAN.....$ 48.01 27.71 ----------
---------- ENGI0098-007 12/01/2016

Rates Fringes

Power equipment operators:
Group 1.....$ 33.68 23.96+A
Group 2.....$ 33.37 23.96+A
Group 3.....$ 33.15 23.96+A
Group 4.....$ 32.54 23.96+A
Group 5.....$ 29.92 23.96+A
Group 6.....$ 28.80 23.96+A
Group 7.....$ 26.86 23.96+A
Group 8.....$ 305.95 23.96+A
Group 9.....$ 230.69 23.96+A
Group 10.....$ 35.17 23.96+A
Group 11.....$ 38.18 23.96+A
Group 12.....$ 39.68 23.96+A
Group 13.....$ 40.68 23.96+A
Group 14.....$ 41.68 23.96+A
Group 15.....$ 43.18 23.96+A

HAZARDOUS WASTE PREMIUM $2.00
FOOTNOTE FOR POWER EQUIPMENT OPERATORS:
Group 8 and Group 9 are per day wages.
A. Paid Holidays: New year's Day, Washington's Birthday, Memorial Day, Independence Day, Labor Day, Columbus Day, Veterans Day, Thanksgiving Day and Christmas Day

POWER EQUIPMENT OPERATORS CLASSIFICATIONS

Group 1: Shovels; crawlers and truck cranes including all tower; self-propelled hydraulic cranes 10 tons and over; draglines; clam shells; cableways; shaft hoists; mucking machines derricks; backhoes; bulldozers; gradalls;
elevating graders; pile drivers; concrete pavers; trenching machines; front end loaders- 5 1/2 cu yds and over; dual
drum paver; automatic grader-excavator(C.M.I. or equal); scrapers towing pan or wagon; tandem dozers or push cats(2 units in tandem); shotcrete machine; tunnel boring machine; combination backhoe/loader 3/4 cu yd hoe or over; jet
engine dryer; tree shredder; post hole digger; post hole hammer; post extractor; truck mounted concrete pump with boom; roto-mill; Grader; Horizontal Drilling Machine; John Henry Rock Drill and similar equipment.

Group 2: Rotary drill with mounted compressor; compressor house (3 to 6 compressors); rock and earth boring machines (excluding McCarthy and similar drills); front end loaders
4 cu yds to 5 1/2 cu yds); forklifts-7 ft lift and over 3
ton capacity; scraper 21 yds and over (struck load); sonic hammer console; reclaimers road planer/milling machine; cal tracks; ballast regulators; rail anchor machines; switch tampers, asphalt pavers; mechanic; welder and transfer machine.

Group 3: Combination backhoe/loader up to 3/4 cu yd; scrapers up to 21 cu yd (struck load, self propelled or tractor drawn); tireman; front end loaders up to 4 yds;
well drillers; engineer or fireman on high pressure boiler; self-loading batch plant; well point operators electric
pumps used in well point system; pumps, 16 inches and over (total discharge); compressor, one or two 900 cu ft and over; powered grease truck; tunnel locomotives and dingys; grout pumps; hydraulic jacks; boom truck; hydraulic cranes- up to 10 ton.

Group 4: Asphalt rollers; self-powered rollers and compactors; tractor without blade drawing sheepsfoot
roller; rubber tire roller; vibratory roller or other type
of compactors including machines for pulverizing and
aerating soil; york rake.

Group 5: Hoists; conveyors; power pavement breakers; self-powered concrete pavement finishing machines; two bag mixers with skip; McCarthy and similar drills; batch plants (not self loading); bulk cement plants; self-propelled material spreaders; three or more 10 KW light plants; 30
KW or more generators; power broom.

Group 6: Compressor (one or two) 315 cu ft to 900 cu ft; pumps 4 inches to 16 inches (total discharge).

Group 7: Compressors up to 315 cu ft; small mixers with skip; pumps up to 4 inches; power heaters; oiler; A-frame trucks; forklifts-up to 7 ft. lift and up to 3 ton capacity; hydro broom; stud welder.

Group 8: Truck crane crews

Group 9: Oiler

Group 10: Master Mechanic

Group 11: Boom lengths over 150 feet including jib

Group 12: Boom lengths over 200 feet including jib

Group 13: Boom lengths over 250 feet including jib

Group 14: Boom lengths over 300 feet including jib

Group 15: Boom lengths over 350 feet including jib

---------- IRON0007-014 09/16/2023

BERKSHIRE (Becket, East Otis, Hinsdale, Monterey, New Marlboro, North Otis, Otis, Peru, Sandisfield, Savoy, Sheffield, Washington, Windsor); FRANKLIN; HAMPDEN; HAMPSHIRE

	Rates	Fringes
IRONWORKER	$ 39.05	32.42

---------- IRON0012-003 07/01/2023

BERKSHIRE (Lee)

	Rates	Fringes
IRONWORKER	$ 34.50	26.83

---------- IRON0012-004 07/01/2023

BERKSHIRE (Remainder of County)

	Rates	Fringes	
Ironworkers:			
Sheeter	$ 34.75	26.83	Structural, Ornamental, Reinforcing, Fence Erector, Machinery Mover, Rigger, Rodman, Stone
Derrickman	$ 34.50	26.83	

---------- LABO0022-002 12/01/2021

FRANKLIN (Orange, Warwick)

	Rates	Fringes
Laborers:		
GROUP 1	$ 35.41	26.59
GROUP 2	$ 35.66	26.59
GROUP 3	$ 36.16	26.59
GROUP 4	$ 36.41	26.59
GROUP 5	$ 36.16	26.59
GROUP 6	$ 37.41	26.59

LABORERS CLASSIFICATIONS
GROUP 1: Laborers; carpenter tenders; cement finisher tenders, plasterer tenders

GROUP 2: Asphalt raker; fence and guard rail erector; laser beam operator; mason tenmder; pipelayer; pneumatic drill operator; pneumatic tool operator; wagon drill operatorm jackhammer operator, pavement breaker, carbide core drilling machine, chain saw operator, barco type jumping tampers, concrete pump, motorized mortar miner, ride-on motorized buggy

GROUP 3: Air track operator; block paver; rammer; curb setter, hydraulic and similar self-powered drills

GROUP 4: Blaster; powderman

GROUP 5: Precast floor and roof, plank erector

GROUP 6: Asbestos Abatement, Toxic and Hazardous waste laborers

---------- LABO0473-005 12/01/2021

FRANKLIN (Except Orange and Warrick); HAMPDEN and HAMPSHIRE COUNTIES (with the exception of Chesterfield, Cummington, Goshen, Middlefield, Plainfield, and Worthington)

	Rates	Fringes
Laborers:		
Group 1	$ 30.37	24.64
Group 2	$ 30.62	24.64
Group 3	$ 31.12	24.64
Group 4	$ 31.37	24.64
Group 5	$ 24.50	24.64
Group 6	$ 32.37	24.64

LABORERS CLASSIFICATIONS

Group 1: Carpenter tenders, cement finisher tenders, laborers, wrecking laborers

Group 2: Asphalt rakers, fence and guard rail erectors, laser beam operator, mason tender, pipelayer, pneumatic drill operator, pneumatic tool operator, wagon drill operator

Group 3: Air track operator, block pavers, rammers, curb setters

Group 4: Blasters, powdermen

Group 5: Flaggers

Group 6: Asbestos abatement, toxic and Hazardous waste laborers

---------- LABO0473-006 12/01/2021

BERKSHIRE; HAMPSHIRE COUNTIES (the towns of Chesterfield, Cummington, Goshen, Middlefield, Plainfield, and Worthington only)

	Rates	Fringes
Laborers:		
Group 1	$ 30.37	24.49

Group 2.....$ 30.62 24.49
Group 3.....$ 31.12 24.49
Group 4.....$ 31.37 24.49
Group 5.....$ 24.50 24.49
Group 6.....$ 32.37 24.49

LABORERS CLASSIFICATIONS

Group 1: Carpenter tenders, cement finisher tenders, laborers, wrecking laborers

Group 2: Asphalt rakers, fence and guard rail erectors, laser beam operator, mason tender, pipelayer, pneumatic drill operator, pneumatic tool operator, wagon drill operator

Group 3: Air track operator, block pavers, rammers, curb setters

Group 4: Blasters, powdermen

Group 5: Flaggers

Group 6: Asbestos abatement, toxic and Hazardous waste laborers

---------- LABO1421-002 12/01/2021

Rates Fringes

Laborers:
Group 1.....$ 41.33 27.37
Group 2.....$ 42.08 27.35
Group 3.....$ 42.33 27.35
Group 4.....$ 37.33 27.35
Group 5.....$ 40.43 27.35
Group 6.....$ 41.33 27.37

Group 1: Adzeman, Wrecking Laborer.
Group 2: Burners, Jackhammers.
Group 3: Small Backhoes, Loaders on tracks, Bobcat Type Loaders, Hydraulic ""Brock"" Type Hammer Operators, Concrete Cutting Saws.
Group 4: Yardman (Salvage Yard Only).
Group 5: Yardman, Burners, Sawyers.
Group 6: Asbestos, Lead Paint, Toxic and Hazardous Waste.

---------- PAIN0035-010 07/01/2023

Rates Fringes

PAINTER
NEW CONSTRUCTION:
Brush, Taper.....$ 36.93 31.10 Spray, Sandblast.....$ 38.33 31.10 REPAINT:
Bridge.....$ 55.51 35.10 Brush, Taper.....$ 33.75 31.10 Spray, Sandblast.....$ 35.65 31.10 ----------

---------- PLUM0004-003 09/01/2023

FRANKLIN (Orange)

	Rates	Fringes
Plumber and Steamfitter	$ 52.55	28.42

---------- PLUM0104-004 09/17/2023

BERKSHIRE (Becket, Otis, Sandisfield); FRANKLIN (Except Monroe, Rowe, and the Western part of Charlemont); HAMPDEN; HAMPSHIRE

	Rates	Fringes
Plumbers and Pipefitters	$ 46.46	29.15

FOOTNOTE: A. Two paid holidays, Independence Day and Labor Day, provided the employee has been employed seven days prior to the holiday by the same employer

---------- PLUM0104-009 09/17/2023

BERKSHIRE (Except Otis, Becket, Sandisfield); FRANKLIN (Monroe, Rowe and the Western part of Charlemont)

	Rates	Fringes
Plumber and Steamfitter	$ 46.46	29.15

FOOTNOTE FOR PLUMBERS & STEAMFITTERS:
A. Paid holidays: Independence Day and Labor Day, provided the employee has been employed seven days prior to the holiday by the same employer.

---------- TEAM0379-001 06/01/2023

	Rates	Fringes
Truck drivers:		
Group 1	$ 38.78	31.86+a+b
Group 2	$ 38.95	31.86+a+b
Group 3	$ 39.02	31.86+a+b
Group 4	$ 39.14	31.86+a+b
Group 5	$ 39.24	31.86+a+b
Group 6	$ 39.53	31.86+a+b
Group 7	$ 39.82	31.86+a+b

POWER TRUCKS $.25 DIFFERENTIAL BY AXLE
TUNNEL WORK (UNDERGROUND ONLY) $.40 DIFFERENTIAL BY AXLE HAZARDOUS MATERIALS (IN HOT ZONE ONLY) $2.00 PREMIUM

TRUCK DRIVERS CLASSIFICATIONS

Group 1: Station wagons; panel trucks; and pickup trucks

Group 2: Two axle equipment; & forklift operator

Group 3: Three axle equipment and tireman

Group 4: Four and Five Axle equipment

Group 5: Specialized earth moving equipment under 35 tons other than conventional type trucks; low bed; vachual; mechanics, paving restoration equipment

Group 6: Specialized earth moving equipment over 35 tons

Group 7: Trailers for earth moving equipment (double hookup)

FOOTNOTES:

A. PAID HOLIDAYS: New Year's Day, Washington's Birthday, Memorial Day, Independence Day, Labor Day, Patriot's Day, Columbus Day, Veteran's Day, Thanksgiving Day and Christmas Day

B. PAID VACATION: Employees with 4 months to 1 year of service receive 1/2 day's pay per month; 1 week vacation
for 1 - 5 years of service; 2 weeks vacation for 5 - 10
years of service; and 3 weeks vacation for more than 10
years of service

WELDERS - Receive rate prescribed for craft performing operation to which welding is incidental.

==========

Note: Executive Order (EO) 13706, Establishing Paid Sick Leave for Federal Contractors applies to all contracts subject to the Davis-Bacon Act for which the contract is awarded (and any solicitation was issued) on or after January 1, 2017. If this contract is covered by the EO, the contractor must provide employees with 1 hour of paid sick leave for every 30 hours they work, up to 56 hours of paid sick leave each year. Employees must be permitted to use paid sick leave for their own illness, injury or other health-related needs, including preventive care; to assist a family member (or person who is like family to the employee) who is ill, injured, or has other health-related needs, including preventive care; or for reasons resulting from, or to assist a family member (or person who is like family to the employee) who is a victim of, domestic violence, sexual assault, or stalking. Additional information on contractor requirements and worker protections under the EO is available at https://www.dol.gov/agencies/whd/government-contracts.

Unlisted classifications needed for work not included within the scope of the

classifications listed may be added after award only as provided in the labor standards contract clauses (29CFR 5.5 (a) (1) (iii)).

The body of each wage determination lists the classification and wage rates that have been found to be prevailing for the cited type(s) of construction in the area covered by the wage determination. The classifications are listed in alphabetical order of ""identifiers"" that indicate whether the particular rate is a union rate (current union negotiated rate for local), a survey rate (weighted average rate) or a union average rate (weighted union average rate).

Union Rate Identifiers

A four letter classification abbreviation identifier enclosed in dotted lines beginning with characters other than ""SU"" or ""UAVG"" denotes that the union classification and rate were prevailing for that classification in the survey. Example: PLUM0198-005 07/01/2014. PLUM is an abbreviation identifier of the union which prevailed in the survey for this classification, which in this example would be Plumbers. 0198 indicates the local union number or district council number where applicable, i.e., Plumbers Local 0198. The next number, 005 in the example, is an internal number used in processing the wage determination. 07/01/2014 is the effective date of the most current negotiated rate, which in this example is July 1, 2014.

Union prevailing wage rates are updated to reflect all rate changes in the collective bargaining agreement (CBA) governing this classification and rate.

Survey Rate Identifiers

Classifications listed under the ""SU"" identifier indicate that no one rate prevailed for this classification in the survey and the published rate is derived by computing a weighted average rate based on all the rates reported in the survey for that classification. As this weighted average rate includes all rates reported in the survey, it may include both union and non-union rates. Example: SULA2012-007 5/13/2014. SU indicates the rates are survey rates based on a weighted average calculation of rates and are not majority rates. LA indicates the State of Louisiana. 2012 is the year of survey on which these classifications and rates are based. The next number, 007 in the example, is an internal number used in producing the wage determination. 5/13 /2014 indicates the survey completion date for the classifications and rates under that identifier.

Survey wage rates are not updated and remain in effect until a new survey is conducted.

Union Average Rate Identifiers

Classification(s) listed under the UAVG identifier indicate that no single majority rate prevailed for those classifications; however, 100% of the data reported for the classifications was union data. EXAMPLE: UAVG-OH-0010 08/29/ 2014. UAVG indicates that the rate is a weighted union average rate. OH

indicates the state. The next number, 0010 in the example, is an internal number used in producing the wage determination. 08/29/2014 indicates the survey completion date for the classifications and rates under that identifier.

A UAVG rate will be updated once a year, usually in January of each year, to reflect a weighted average of the current negotiated/CBA rate of the union locals from which the rate is based.

WAGE DETERMINATION APPEALS PROCESS

1.) Has there been an initial decision in the matter? This can be:

* an existing published wage determination
* a survey underlying a wage determination
* a Wage and Hour Division letter setting forth a position on a wage determination matter
* a conformance (additional classification and rate) ruling

On survey related matters, initial contact, including requests for summaries of surveys, should be with the Wage and Hour National Office because National Office has responsibility for the Davis-Bacon survey program. If the response from this initial contact is not satisfactory, then the process described in 2.) and 3.) should be followed.

With regard to any other matter not yet ripe for the formal process described here, initial contact should be with the Branch of Construction Wage Determinations. Write to:

Branch of Construction Wage Determinations
Wage and Hour Division
U.S. Department of Labor
200 Constitution Avenue, N.W.
Washington, DC 20210

2.) If the answer to the question in 1.) is yes, then an interested party (those affected by the action) can request review and reconsideration from the Wage and Hour Administrator (See 29 CFR Part 1.8 and 29 CFR Part 7). Write to :

Wage and Hour Administrator
U.S. Department of Labor
200 Constitution Avenue, N.W.
Washington, DC 20210

The request should be accompanied by a full statement of the interested party 's position and by any information (wage payment data, project description, area practice material, etc.) that the requestor considers relevant to the issue.

3.) If the decision of the Administrator is not favorable, an interested party may appeal directly to the Administrative Review Board (formerly the Wage Appeals Board). Write to:

Administrative Review Board
U.S. Department of Labor
200 Constitution Avenue, N.W.
Washington, DC 20210

4.) All decisions by the Administrative Review Board are final.

==========

END OF GENERAL DECISION"

AMERICAN IRON AND STEET REQUIREMENTS

UNITED STATES ENVIRONMENTAL PROTECTION AGENCY
WASHINGTON, D.C. 20460

MAR 20 2014

OFFICE OF WATER

MEMORANDUM

SUBJECT: Implementation of American Iron and Steel provisions of P.L. 113-76, Consolidated Appropriations Act, 2014

FROM: Andrew D. Sawyers, Director
Office of Wastewater Management (4201M)

Peter C. Grevatt, Director
Office of Ground Water and Drinking Water (4601M)

TO: Water Management Division Directors
Regions I - X

P.L. 113-76, Consolidated Appropriations Act, 2014 (Act), includes an "American Iron and Steel (AIS)" requirement in section 436 that requires Clean Water State Revolving Loan Fund (CWSRF) and Drinking Water State Revolving Loan Fund (DWSRF) assistance recipients to use iron and steel products that are produced in the United States for projects for the construction, alteration, maintenance, or repair of a public water system or treatment works if the project is funded through an assistance agreement executed beginning January 17, 2014 (enactment of the Act) through the end of Federal Fiscal Year 2014.

Section 436 also sets forth certain circumstances under which EPA may waive the AIS requirement. Furthermore, the Act specifically exempts projects where engineering plans and specifications were approved by a State agency prior to January 17, 2014.

The approach described below explains how EPA will implement the AIS requirement. The first section is in the form of questions and answers that address the types of projects that must comply with the AIS requirement, the types of products covered by the AIS requirement, and compliance. The second section is a step-by-step process for requesting waivers and the circumstances under which waivers may be granted.

Internet Address (URL) • http://www.epa.gov
Recycled/Recyclable • Printed with Vegetable Oil Based Inks on 100% Postconsumer, Process Chlorine Free Recycled Paper

Implementation

The Act states:

Sec. 436 (a)(1) None of the funds made available by a State water pollution control revolving fund as authorized by title VI of the Federal Water Pollution Control Act (33 U.S.C. 1381 et seq.) or made available by a drinking water treatment revolving loan fund as authorized by section 1452 of the Safe Drinking Water Act (42 U.S.C. 300j–12) shall be used for a project for the construction, alteration, maintenance, or repair of a public water system or treatment works unless all of the iron and steel products used in the project are produced in the United States.

(2) In this section, the term ''iron and steel products'' means the following products made primarily of iron or steel: lined or unlined pipes and fittings, manhole covers and other municipal castings, hydrants, tanks, flanges, pipe clamps and restraints, valves, structural steel, reinforced precast concrete, and construction materials.

(b) Subsection (a) shall not apply in any case or category of cases in which the Administrator of the Environmental Protection Agency (in this section referred to as the ''Administrator'') finds that—

(1) applying subsection (a) would be inconsistent with the public interest;

(2) iron and steel products are not produced in the United States in sufficient and reasonably available quantities and of a satisfactory quality; or

(3) inclusion of iron and steel products produced in the United States will increase the cost of the overall project by more than 25 percent.

(c) If the Administrator receives a request for a waiver under this section, the Administrator shall make available to the public on an informal basis a copy of the request and information available to the Administrator concerning the request, and shall allow for informal public input on the request for at least 15 days prior to making a finding based on the request. The Administrator shall make the request and accompanying information available by electronic means, including on the official public Internet Web site of the Environmental Protection Agency.

(d) This section shall be applied in a manner consistent with United States obligations under international agreements.

(e) The Administrator may retain up to 0.25 percent of the funds appropriated in this Act for the Clean and Drinking Water State Revolving Funds for carrying out the provisions described in subsection (a)(1) for management and oversight of the requirements of this section.

(f) This section does not apply with respect to a project if a State agency approves the engineering plans and specifications for the project, in that agency's capacity to approve such plans and specifications prior to a project requesting bids, prior to the date of the enactment of this Act.

The following questions and answers provide guidance for implementing and complying with the AIS requirements:

Project Coverage

1) What classes of projects are covered by the AIS requirement?

All treatment works projects funded by a CWSRF assistance agreement, and all public water system projects funded by a DWSRF assistance agreement, from the date of enactment through the end of Federal Fiscal Year 2014, are covered. The AIS requirements apply to the entirety of the project, no matter when construction begins or ends. Additionally, the AIS requirements apply to all parts of the project, no matter the source of funding.

2) Does the AIS requirement apply to nonpoint source projects or national estuary projects?

No. Congress did not include an AIS requirement for nonpoint source and national estuary projects unless the project can also be classified as a 'treatment works' as defined by section 212 of the Clean Water Act.

3) Are any projects for the construction, alteration, maintenance, or repair of a public water system or treatment works excluded from the AIS requirement?

Any project, whether a treatment works project or a public water system project, for which engineering plans and specifications were approved by the responsible state agency prior to January 17, 2014, is excluded from the AIS requirements.

4) What if the project does not have approved engineering plans and specifications but has signed an assistance agreement with a CWSRF or DWSRF program prior to January 17, 2014?

The AIS requirements do not apply to any project for which an assistance agreement was signed prior to January 17, 2014.

5) What if the project does not have approved engineering plans and specifications, but bids were advertised prior to January 17, 2014 and an assistance agreement was signed after January 17, 2014?

If the project does not require approved engineering plans and specifications, the bid advertisement date will count in lieu of the approval date for purposes of the exemption in section 436(f).

6) What if the assistance agreement that was signed prior to January 17, 2014, only funded a part of the overall project, where the remainder of the project will be funded later with another SRF loan?

If the original assistance agreement funded any construction of the project, the date of the original assistance agreement counts for purposes of the exemption. If the original assistance agreement was only for planning and design, the date of that assistance agreement will count for purposes of the exemption only if there is a written commitment or expectation on the part of the assistance recipient to fund the remainder of the project with SRF funds.

7) What if the assistance agreement that was signed prior to January 17, 2014, funded the first phase of a multi-phase project, where the remaining phases will be funded by SRF assistance in the future?

In such a case, the phases of the project will be considered a single project if all construction necessary to complete the building or work, regardless of the number of contracts or assistance agreements involved, are closely related in purpose, time and place. However, there are many situations in which major construction activities are clearly undertaken in phases that are distinct in purpose, time, or place. In the case of distinct phases, projects with engineering plans and specifications approval or assistance agreements signed prior to January 17, 2014 would be excluded from AIS requirements while those approved/signed on January 17, 2014, or later would be covered by the AIS requirements.

8) What if a project has split funding from a non-SRF source?

Many States intend to fund projects with "split" funding, from the SRF program and from State or other programs. Based on the Act language in section 436, which requires that American iron and steel products be used in any project for the construction, alteration, maintenance, or repair of a public water system or treatment works receiving SRF funding between and including January 17, 2014 and September 30, 2014, any project that is funded in whole or in part with such funds must comply with the AIS requirement. A "project" consists of all construction necessary to complete the building or work regardless of the number of contracts or assistance agreements involved so long as all contracts and assistance agreements awarded are closely related in purpose, time and place. This precludes the intentional splitting of SRF projects into separate and smaller contracts or assistance agreements to avoid AIS coverage on some portion of a larger project, particularly where the activities are integrally and proximately related to the whole. However, there are many situations in which major construction activities are clearly undertaken in separate phases that are distinct in purpose, time, or place, in which case, separate contracts or assistance agreement for SRF and State or other funding would carry separate requirements.

9) What about refinancing?

If a project began construction, financed from a non-SRF source, prior to January 17, 2014, but is refinanced through an SRF assistance agreement executed on or after January 17, 2014 and prior to October 1, 2014, AIS requirements will apply to all construction that occurs on or after January 17, 2014, through completion of construction, unless, as is likely, engineering plans and specifications were approved by a responsible state agency prior to January 17, 2014. There is no retroactive application of the AIS requirements where a refinancing occurs for a project that has completed construction prior to January 17, 2014.

10) Do the AIS requirements apply to any other EPA programs, besides the SRF program, such as the Tribal Set-aside grants or grants to the Territories and DC?

No, the AIS requirement only applies to funds made available by a State water pollution control revolving fund as authorized by title VI of the Federal Water Pollution Control Act (33 U.S.C. 1381 et seq.) or made available by a drinking water treatment revolving loan fund as authorized by section 1452 of the Safe Drinking Water Act (42 U.S.C. 300j–12)

Covered Iron and Steel Products

11) What is an iron or steel product?

For purposes of the CWSRF and DWSRF projects that must comply with the AIS requirement, an iron or steel product is one of the following made primarily of iron or steel that is permanently incorporated into the public water system or treatment works:

Lined or unlined pipes or fittings;
Manhole Covers;
Municipal Castings (defined in more detail below);
Hydrants;
Tanks;
Flanges;
Pipe clamps and restraints;
Valves;
Structural steel (defined in more detail below);
Reinforced precast concrete; and
Construction materials (defined in more detail below).

12) What does the term 'primarily iron or steel' mean?

'Primarily iron or steel' places constraints on the list of products above. For one of the listed products to be considered subject to the AIS requirements, it must be made of

greater than 50% iron or steel, measured by cost. The cost should be based on the material costs.

13) Can you provide an example of how to perform a cost determination?

For example, the iron portion of a fire hydrant would likely be the bonnet, body and shoe, and the cost then would include the pouring and casting to create those components. The other material costs would include non-iron and steel internal workings of the fire hydrant (i.e., stem, coupling, valve, seals, etc). However, the assembly of the internal workings into the hydrant body would not be included in this cost calculation. If one of the listed products is not made primarily of iron or steel, United States (US) provenance is not required. An exception to this definition is reinforced precast concrete, which is addressed in a later question.

14) If a product is composed of more than 50% iron or steel, but is not listed in the above list of items, must the item be produced in the US? Alternatively, must the iron or steel in such a product be produced in the US?

The answer to both question is no. Only items on the above list must be produced in the US. Additionally, the iron or steel in a non-listed item can be sourced from outside the US.

15) What is the definition of steel?

Steel means an alloy that includes at least 50 percent iron, between .02 and 2 percent carbon, and may include other elements. Metallic elements such as chromium, nickel, molybdenum, manganese, and silicon may be added during the melting of steel for the purpose of enhancing properties such as corrosion resistance, hardness, or strength. The definition of steel covers carbon steel, alloy steel, stainless steel, tool steel and other specialty steels.

16) What does 'produced in the United States' mean?

Production in the United States of the iron or steel products used in the project requires that all manufacturing processes, including application of coatings, must take place in the United States, with the exception of metallurgical processes involving refinement of steel additives. All manufacturing processes includes processes such as melting, refining, forming, rolling, drawing, finishing, fabricating and coating. Further, if a domestic iron and steel product is taken out of the US for any part of the manufacturing process, it becomes foreign source material. However, raw materials such as iron ore, limestone and iron and steel scrap are not covered by the AIS requirement, and the material(s), if any, being applied as a coating are similarly not covered. Non-iron or steel components of an iron and steel product may come from non-US sources. For example, for products such as valves and hydrants, the individual non-iron and steel components do not have to be of domestic origin.

17) Are the raw materials used in the production of iron or steel required to come from US sources?

No. Raw materials, such as iron ore, limestone, scrap iron, and scrap steel, can come from non-US sources.

18) If an above listed item is primarily made of iron or steel, but is only at the construction site temporarily, must such an item be produced in the US?

No. Only the above listed products made primarily of iron or steel, permanently incorporated into the project must be produced in the US. For example trench boxes, scaffolding or equipment, which are removed from the project site upon completion of the project, are not required to be made of U.S. Iron or Steel.

19) What is the definition of 'municipal castings'?

Municipal castings are cast iron or steel infrastructure products that are melted and cast. They typically provide access, protection, or housing for components incorporated into utility owned drinking water, storm water, wastewater, and surface infrastructure. They are typically made of grey or ductile iron, or steel. Examples of municipal castings are:

Access Hatches;
Ballast Screen;
Benches (Iron or Steel);
Bollards;
Cast Bases;
Cast Iron Hinged Hatches, Square and Rectangular;
Cast Iron Riser Rings;
Catch Basin Inlet;
Cleanout/Monument Boxes;
Construction Covers and Frames;
Curb and Corner Guards;
Curb Openings;
Detectable Warning Plates;
Downspout Shoes (Boot, Inlet);
Drainage Grates, Frames and Curb Inlets;
Inlets;
Junction Boxes;
Lampposts;
Manhole Covers, Rings and Frames, Risers;
Meter Boxes;
Service Boxes;
Steel Hinged Hatches, Square and Rectangular;
Steel Riser Rings;
Trash receptacles;
Tree Grates;

Tree Guards;
Trench Grates; and
Valve Boxes, Covers and Risers.

20) What is 'structural steel'?

Structural steel is rolled flanged shapes, having at least one dimension of their cross-section three inches or greater, which are used in the construction of bridges, buildings, ships, railroad rolling stock, and for numerous other constructional purposes. Such shapes are designated as wide-flange shapes, standard I-beams, channels, angles, tees and zees. Other shapes include H-piles, sheet piling, tie plates, cross ties, and those for other special purposes.

21) What is a 'construction material' for purposes of the AIS requirement?

Construction materials are those articles, materials, or supplies made primarily of iron and steel, that are permanently incorporated into the project, not including mechanical and/or electrical components, equipment and systems. Some of these products may overlap with what is also considered "structural steel". This includes, but is not limited to, the following products: wire rod, bar, angles, concrete reinforcing bar, wire, wire cloth, wire rope and cables, tubing, framing, joists, trusses, fasteners (i.e., nuts and bolts), welding rods, decking, grating, railings, stairs, access ramps, fire escapes, ladders, wall panels, dome structures, roofing, ductwork, surface drains, cable hanging systems, manhole steps, fencing and fence tubing, guardrails, doors, and stationary screens.

22) What is not considered a 'construction material' for purposes of the AIS requirement?

Mechanical and electrical components, equipment and systems are not considered construction materials. Mechanical equipment is typically that which has motorized parts and/or is powered by a motor. Electrical equipment is typically any machine powered by electricity and includes components that are part of the electrical distribution system.

The following examples (including their appurtenances necessary for their intended use and operation) are NOT considered construction materials: pumps, motors, gear reducers, drives (including variable frequency drives (VFDs)), electric/pneumatic/manual accessories used to operate valves (such as electric valve actuators), mixers, gates, motorized screens (such as traveling screens), blowers/aeration equipment, compressors, meters, sensors, controls and switches, supervisory control and data acquisition (SCADA), membrane bioreactor systems, membrane filtration systems, filters, clarifiers and clarifier mechanisms, rakes, grinders, disinfection systems, presses (including belt presses), conveyors, cranes, HVAC (excluding ductwork), water heaters, heat exchangers, generators, cabinetry and housings (such as electrical boxes/enclosures), lighting fixtures, electrical conduit, emergency life systems, metal office furniture, shelving, laboratory equipment, analytical instrumentation, and dewatering equipment.

23) If the iron or steel is produced in the US, may other steps in the manufacturing process take place outside of the US, such as assembly?

No. Production in the US of the iron or steel used in a listed product requires that all manufacturing processes must take place in the United States, except metallurgical processes involving refinement of steel additives.

24) What processes must occur in the US to be compliant with the AIS requirement for reinforced precast concrete?

While reinforced precast concrete may not be at least 50% iron or steel, in this particular case, the reinforcing bar and wire must be produced in the US and meet the same standards as for any other iron or steel product. Additionally, the casting of the concrete product must take place in the US. The cement and other raw materials used in concrete production are not required to be of domestic origin.

If the reinforced concrete is cast at the construction site, the reinforcing bar and wire are considered to be a construction material and must be produced in the US.

Compliance

25) How should an assistance recipient document compliance with the AIS requirement?

In order to ensure compliance with the AIS requirement, specific AIS contract language must be included in each contract, starting with the assistance agreement, all the way down to the purchase agreements. Sample language for assistance agreements and contracts can be found in Appendix 3 and 4.

EPA recommends the use of a step certification process, similar to one used by the Federal Highway Administration. The step certification process is a method to ensure that producers adhere to the AIS requirement and assistance recipients can verify that products comply with the AIS requirement. The process also establishes accountability and better enables States to take enforcement actions against violators.

Step certification creates a paper trail which documents the location of the manufacturing process involved with the production of steel and iron materials. A step certification is a process under which each handler (supplier, fabricator, manufacturer, processor, etc) of the iron and steel products certifies that their step in the process was domestically performed. Each time a step in the manufacturing process takes place, the manufacturer delivers its work along with a certification of its origin. A certification can be quite simple. Typically, it includes the name of the manufacturer, the location of the manufacturing facility where the product or process took place (not its headquarters), a description of the product or item being delivered, and a signature by a manufacturer's responsible party. Attached, as Appendix 5, are sample certifications. These certifications should be collected and maintained by assistance recipients.

Alternatively, the final manufacturer that delivers the iron or steel product to the worksite, vendor, or contractor, may provide a certification asserting that all manufacturing processes occurred in the US. While this type of certification may be acceptable, it may not provide the same degree of assurance. Additional documentation may be needed if the certification is lacking important information. Step certification is the best practice.

26) How should a State ensure assistance recipients are complying with the AIS requirement?

In order to ensure compliance with the AIS requirement, States SRF programs must include specific AIS contract language in the assistance agreement. Sample language for assistance agreements can be found in Appendix 3.

States should also, as a best practice, conduct site visits of projects during construction and review documentation demonstrating proof of compliance which the assistance recipient has gathered.

27) What happens if a State or EPA finds a non-compliant iron and/or steel product permanently incorporated in the project?

If a potentially non-compliant product is identified, the State should notify the assistance recipient of the apparent unauthorized use of the non-domestic component, including a proposed corrective action, and should be given the opportunity to reply. If unauthorized use is confirmed, the State can take one or more of the following actions: request a waiver where appropriate; require the removal of the non-domestic item; or withhold payment for all or part of the project. Only EPA can issue waivers to authorize the use of a non-domestic item. EPA may use remedies available to it under the Clean Water Act, the Safe Drinking Water Act, and 40 CFR part 31 grant regulations, in the event of a violation of a grant term and condition.

It is recommended that the State work collaboratively with EPA to determine the appropriate corrective action, especially in cases where the State is the one who identifies the item in noncompliance or there is a disagreement with the assistance recipient.

If fraud, waste, abuse, or any violation of the law is suspected, the Office of Inspector General (OIG) should be contacted immediately. The OIG can be reached at 1-888-546-8740 or OIG_Hotline@epa.gov. More information can be found at this website: http://oig.hhs.gov/fraud/report-fraud/

28) How do international trade agreements affect the implementation of the AIS requirements?

The AIS provision applies in a manner consistent with United States obligations under international agreements. Typically, these obligations only apply to direct procurement by the entities that are signatories to such agreements. In general, SRF

assistance recipients are not signatories to such agreements, so these agreements have no impact on this AIS provision. In the few instances where such an agreement applies to a municipality, that municipality is under the obligation to determine its applicability and requirements and document the actions taken to comply for the State.

Waiver Process

The statute permits EPA to issue waivers for a case or category of cases where EPA finds (1) that applying these requirements would be inconsistent with the public interest; (2) iron and steel products are not produced in the US in sufficient and reasonably available quantities and of a satisfactory quality; or (3) inclusion of iron and steel products produced in the US will increase the cost of the overall project by more than 25 percent.

In order to implement the AIS requirements, EPA has developed an approach to allow for effective and efficient implementation of the waiver process to allow projects to proceed in a timely manner. The framework described below will allow States, on behalf of the assistance recipients, to apply for waivers of the AIS requirement directly to EPA Headquarters. Only waiver requests received from states will be considered. Pursuant to the Act, EPA has the responsibility to make findings as to the issuance of waivers to the AIS requirements.

Definitions

The following terms are critical to the interpretation and implementation of the AIS requirements and apply to the process described in this memorandum:

Reasonably Available Quantity: The quantity of iron or steel products is available or will be available at the time needed and place needed, and in the proper form or specification as specified in the project plans and design.

Satisfactory Quality: The quality of iron or steel products, as specified in the project plans and designs.

Assistance Recipient: A borrower or grantee that receives funding from a State CWSRF or DWSRF program.

Step-By-Step Waiver Process

Application by Assistance Recipient

Each local entity that receives SRF water infrastructure financial assistance is required by section 436 of the Act to use American made iron and steel products in the construction of its project. However, the recipient may request a waiver. Until a waiver is granted by EPA, the AIS requirement stands, except as noted above with respect to municipalities covered by international agreements.

The waiver process begins with the SRF assistance recipient. In order to fulfill the AIS requirement, the assistance recipient must in good faith design the project (where applicable) and solicit bids for construction with American made iron and steel products. It is essential that the assistance recipient include the AIS terms in any request for proposals or solicitations for bids, and in all contracts (see Appendix 3 for sample construction contract language). The assistance recipient may receive a waiver at any point before, during, or after the bid process, if one or more of three conditions is met:

1. Applying the American Iron and Steel requirements of the Act would be inconsistent with the public interest;
2. Iron and steel products are not produced in the United States in sufficient and reasonably available quantities and of a satisfactory quality; or
3. Inclusion of iron and steel products produced in the United States will increase the cost of the overall project by more than 25 percent.

Proper and sufficient documentation must be provided by the assistance recipient. A checklist detailing the types of information required for a waiver to be processed is attached as Appendix 1.

Additionally, it is strongly encouraged that assistance recipients hold pre-bid conferences with potential bidders. A pre-bid conference can help to identify iron and steel products needed to complete the project as described in the plans and specifications that may not be available from domestic sources. It may also identify the need to seek a waiver prior to bid, and can help inform the recipient on compliance options.

In order to apply for a project waiver, the assistance recipient should email the request in the form of a Word document (.doc) to the State SRF program. It is strongly recommended that the State designate a single person for all AIS communications. The State SRF designee will review the application for the waiver and determine whether the necessary information has been included. Once the waiver application is complete, the State designee will forward the application to either of two email addresses. For CWSRF waiver requests, please send the application to: cwsrfwaiver@epa.gov. For DWSRF waiver requests, please send the application to: dwsrfwaiver@epa.gov.

Evaluation by EPA

After receiving an application for waiver of the AIS requirements, EPA Headquarters will publish the request on its website for 15 days and receive informal comment. EPA Headquarters will then use the checklist in Appendix 2 to determine whether the application properly and adequately documents and justifies the statutory basis cited for the waiver – that it is quantitatively and qualitatively sufficient – and to determine whether or not to grant the waiver.

In the event that EPA finds that adequate documentation and justification has been submitted, the Administrator may grant a waiver to the assistance recipient. EPA will notify the State designee that a waiver request has been approved or denied as soon as such a decision has been made. Granting such a waiver is a three-step process:

1. Posting – After receiving an application for a waiver, EPA is required to publish the application and all material submitted with the application on EPA's website for 15 days. During that period, the public will have the opportunity to review the request and provide informal comment to EPA. The website can be found at: http://water.epa.gov/grants_funding/aisrequirement.cfm

2. Evaluation – After receiving an application for waiver of the AIS requirements, EPA Headquarters will use the checklist in Appendix 2 to determine whether the application properly and adequately documents and justifies the statutory basis cited for the waiver – that it is quantitatively and qualitatively sufficient – and to determine whether or not to grant the waiver.

3. Signature of waiver approval by the Administrator or another agency official with delegated authority – As soon as the waiver is signed and dated, EPA will notify the State SRF program, and post the signed waiver on our website. The assistance recipient should keep a copy of the signed waiver in its project files.

Public Interest Waivers

EPA has the authority to issue public interest waivers. Evaluation of a public interest waiver request may be more complicated than that of other waiver requests so they may take more time than other waiver requests for a decision to be made. An example of a public interest waiver that might be issued could be for a community that has standardized on a particular type or manufacturer of a valve because of its performance to meet their specifications. Switching to an alternative valve may require staff to be trained on the new equipment and additional spare parts would need to be purchased and stocked, existing valves may need to be unnecessarily replaced, and portions of the system may need to be redesigned. Therefore, requiring the community to install an alternative valve would be inconsistent with public interest.

EPA also has the authority to issue a public interest waiver that covers categories of products that might apply to all projects.

EPA reserves the right to issue national waivers that may apply to particular classes of assistance recipients, particular classes of projects, or particular categories of iron or steel products. EPA may develop national or (US geographic) regional categorical waivers through the identification of similar circumstances in the detailed justifications presented to EPA in a waiver request or requests. EPA may issue a national waiver based on policy decisions regarding the public's interest or a determination that a particular item is not produced domestically in reasonably available quantities or of a sufficient quality. In such cases, EPA may determine it is necessary to issue a national waiver.

If you have any questions concerning the contents of this memorandum, you may contact us, or have your staff contact Jordan Dorfman, Attorney-Advisor, State Revolving Fund Branch, Municipal Support Division, at dorfman.jordan@epa.gov or (202) 564-0614 or Kiri Anderer, Environmental Engineer, Infrastructure Branch, Drinking Water Protection Division, at anderer.kirsten@epa.gov or (202) 564-3134.

Attachments

Attachment 1: Information Checklist for Waiver Request

The purpose of this checklist is to help ensure that all appropriate and necessary information is submitted to EPA. EPA recommends that States review this checklist carefully and provide all appropriate information to EPA. This checklist is for informational purposes only and does not need to be included as part of a waiver application.

Items	✓	Notes
General • Waiver request includes the following information: — Description of the foreign and domestic construction materials — Unit of measure — Quantity — Price — Time of delivery or availability — Location of the construction project — Name and address of the proposed supplier — A detailed justification for the use of foreign construction materials • Waiver request was submitted according to the instructions in the memorandum • Assistance recipient made a good faith effort to solicit bids for domestic iron and steel products, as demonstrated by language in requests for proposals, contracts, and communications with the prime contractor		
Cost Waiver Requests • Waiver request includes the following information: — Comparison of overall cost of project with domestic iron and steel products to overall cost of project with foreign iron and steel products — Relevant excerpts from the bid documents used by the contractors to complete the comparison — Supporting documentation indicating that the contractor made a reasonable survey of the market, such as a description of the process for identifying suppliers and a list of contacted suppliers		
Availability Waiver Requests • Waiver request includes the following supporting documentation necessary to demonstrate the availability, quantity, and/or quality of the materials for which the waiver is requested: — Supplier information or pricing information from a reasonable number of domestic suppliers indicating availability/delivery date for construction materials — Documentation of the assistance recipient's efforts to find available domestic sources, such as a description of the process for identifying suppliers and a list of contacted suppliers. — Project schedule — Relevant excerpts from project plans, specifications, and permits indicating the required quantity and quality of construction materials • Waiver request includes a statement from the prime contractor and/or supplier confirming the non-availability of the domestic construction materials for which the waiver is sought • Has the State received other waiver requests for the materials described in this waiver request, for comparable projects?		

Attachment 2: HQ Review Checklist for Waiver Request

Instructions: To be completed by EPA. Review all waiver requests using the questions in the checklist, and mark the appropriate box as Yes, No or N/A. Marks that fall inside the shaded boxes may be grounds for denying the waiver. If none of your review markings fall into a shaded box, the waiver is eligible for approval if it indicates that one or more of the following conditions applies to the domestic product for which the waiver is sought:

1. The iron and/or steel products are not produced in the United States in sufficient and reasonably available quantities and of a satisfactory quality.
2. The inclusion of iron and/or steel products produced in the United States will increase the cost of the overall project by more than 25 percent.

Review Items	Yes	No	N/A	Comments
Cost Waiver Requests • Does the waiver request include the following information? — Comparison of overall cost of project with domestic iron and steel products to overall cost of project with foreign iron and steel products — Relevant excerpts from the bid documents used by the contractors to complete the comparison — A sufficient number of bid documents or pricing information from domestic sources to constitute a reasonable survey of the market • Does the Total Domestic Project exceed the Total Foreign Project Cost by more than 25%?				
Availability Waiver Requests • Does the waiver request include supporting documentation sufficient to show the availability, quantity, and/or quality of the iron and/or steel product for which the waiver is requested? — Supplier information or other documentation indicating availability/delivery date for materials — Project schedule — Relevant excerpts from project plans, specifications, and permits indicating the required quantity and quality of materials				
• Does supporting documentation provide sufficient evidence that the contractors made a reasonable effort to locate domestic suppliers of materials, such as a description of the process for identifying suppliers and a list of contacted suppliers?				
• Based on the materials delivery/availability date indicated in the supporting documentation, will the materials be unavailable when they are needed according to the project schedule? (By item, list schedule date and domestic delivery quote date or other relevant information)				
• Is EPA aware of any other evidence indicating the non-availability of the materials for which the waiver is requested? Examples include: — Multiple waiver requests for the materials described in this waiver request, for comparable projects in the same State — Multiple waiver requests for the materials described in this waiver request, for comparable projects in other States — Correspondence with construction trade associations indicating the non-availability of the materials				
• Are the available domestic materials indicated in the bid documents of inadequate quality compared those required by the project plans, specifications, and/or permits?				

Attachment 3: Example Loan Agreement Language

ALL ASSISTANCE AGREEMENT MUST HAVE A CLAUSE REQUIRING COMPLIANCE WITH THE AIS REQUIREMENT. THIS IS AN EXAMPLE OF WHAT COULD BE INCLUDED IN SRF ASSISTANCE AGREEMENTS. EPA MAKES NO CLAIMS REGARDING THE LEGALITY OF THIS CLAUSE WITH RESPECT TO STATE LAW:

Comply with all federal requirements applicable to the Loan (including those imposed by the 2014 Appropriations Act and related SRF Policy Guidelines) which the Participant understands includes, among other, requirements that all of the iron and steel products used in the Project are to be produced in the United States ("American Iron and Steel Requirement") unless (i) the Participant has requested and obtained a waiver from the Agency pertaining to the Project or (ii) the Finance Authority has otherwise advised the Participant in writing that the American Iron and Steel Requirement is not applicable to the Project.

Comply with all record keeping and reporting requirements under the Clean Water Act/Safe Drinking Water Act, including any reports required by a Federal agency or the Finance Authority such as performance indicators of program deliverables, information on costs and project progress. The Participant understands that (i) each contract and subcontract related to the Project is subject to audit by appropriate federal and state entities and (ii) failure to comply with the Clean Water Act/Safe Drinking Water Act and this Agreement may be a default hereunder that results in a repayment of the Loan in advance of the maturity of the Bonds and/or other remedial actions.

Attachment 4: Sample Construction Contract Language

ALL CONTRACTS MUST HAVE A CLAUSE REQUIRING COMPLIANCE WITH THE AIS REQUIREMENT. THIS IS AN EXAMPLE OF WHAT COULD BE INCLUDED IN ALL CONTRACTS IN PROJECTS THAT USE SRF FUNDS. EPA MAKES NO CLAIMS REGARDING THE LEGALITY OF THIS CLAUSE WITH RESPECT TO STATE OR LOCAL LAW:

The Contractor acknowledges to and for the benefit of the City of _____("Purchaser") and the _____(the "State") that it understands the goods and services under this Agreement are being funded with monies made available by the Clean Water State Revolving Fund and/or Drinking Water State Revolving Fund that have statutory requirements commonly known as "American Iron and Steel;" that requires all of the iron and steel products used in the project to be produced in the United States ("American Iron and Steel Requirement") including iron and steel products provided by the Contactor pursuant to this Agreement. The Contractor hereby represents and warrants to and for the benefit of the Purchaser and the State that (a) the Contractor has reviewed and understands the American Iron and Steel Requirement, (b) all of the iron and steel products used in the project will be and/or have been produced in the United States in a manner that complies with the American Iron and Steel Requirement, unless a waiver of the requirement is approved, and (c) the Contractor will provide any further verified information, certification or assurance of compliance with this paragraph, or information necessary to support a waiver of the American Iron and Steel Requirement, as may be requested by the Purchaser or the State. Notwithstanding any other provision of this Agreement, any failure to comply with this paragraph by the Contractor shall permit the Purchaser or State to recover as damages against the Contractor any loss, expense, or cost (including without limitation attorney's fees) incurred by the Purchaser or State resulting from any such failure (including without limitation any impairment or loss of funding, whether in whole or in part, from the State or any damages owed to the State by the Purchaser). While the Contractor has no direct contractual privity with the State, as a lender to the Purchaser for the funding of its project, the Purchaser and the Contractor agree that the State is a third-party beneficiary and neither this paragraph (nor any other provision of this Agreement necessary to give this paragraph force or effect) shall be amended or waived without the prior written consent of the State.

Attachment 5: Sample Certification 1

The following information is provided as a sample letter of step certification for AIS compliance. Documentation must be provided on company letterhead.

Date

Company Name

Company Address

City, State Zip

Subject: American Iron and Steel Step Certification for Project (XXXXXXXXXX)

I, (company representative), certify that the (melting, bending, coating, galvanizing, cutting, etc.) process for (manufacturing or fabricating) the following products and/or materials shipped or provided for the subject project is in full compliance with the American Iron and Steel requirement as mandated in EPA's State Revolving Fund Programs.

Item, Products and/or Materials:

1. Xxxx
2. Xxxx
3. Xxxx

Such process took place at the following location:

If any of the above compliance statements change while providing material to this project we will immediately notify the prime contractor and the engineer.

Signed by company representative

Attachment 5: Sample Certification 2

The following information is provided as a sample letter of certification for AIS compliance. Documentation must be provided on company letterhead.

Date

Company Name

Company Address

City, State Zip

Subject: American Iron and Steel Certification for Project (XXXXXXXXXX)

I, (company representative), certify that the following products and/or materials shipped/provided to the subject project are in full compliance with the American Iron and Steel requirement as mandated in EPA's State Revolving Fund Programs.

Item, Products and/or Materials:

1. Xxxx
2. Xxxx
3. Xxxx

Such process took place at the following location:

If any of the above compliance statements change while providing material to this project we will immediately notify the prime contractor and the engineer.

Signed by company representative

WIFIA SPECIFICATION PACKAGE AND BID CONTRACT LANGUAGE

Last Updated: December 2020

The is a reference document that provides all necessary contract language for WIFIA funded projects. Please note that some of the contract language in this package is required and must be included verbatim and some is suggested. For *Suggested Contract Language*, you may use your own language so long as it still ensures that provisions are included to guarantee compliance with the federal requirements.

EPA MAKES NO CLAIMS REGARDING THE LEGALITY OF THE FEDERAL LANGUAGE PROVISIONS WITH RESPECT TO STATE OR LOCAL LAW.

ECONOMIC AND MISCELLANEOUS AUTHORITIES

DEBARMENT AND SUSPENSION AND PROHIBITIONS RELATING TO VIOLATIONS OF CWA AND CAA WITH RESPECT TO FEDERAL CONTRACTS, GRANTS, OR LOANS

Suggested Contract Language:

Debarment and Suspension. Contractor certifies that it will not knowingly enter into a contract with anyone who is ineligible under the 2 CFR part 180 and part 1532 (per Executive Order 12549, 51 FR 6370, February 21, 1986) or who is prohibited under Section 306 of the Clean Air Act or Section 508 of the Clean Water Act to participate in the [Project]. Suspension and debarment information can be accessed at http://www.sam.gov. Contractor represents and warrants that it has or will include a term or conditions requiring compliance with this provision in all of its subcontracts under this Agreement.

NEW RESTRICTIONS ON LOBBYING

Suggested Contract Language:

Federal Lobbying Restrictions (31 U.S.C 1352). Recipients of federal financial assistance may not pay any person for influencing or attempting to influence any officer or employee of a federal agency, a member of Congress, an officer or employee of Congress, or an employee of a member of Congress with respect to the award, continuation, renewal, amendment, or modification of a federal grant, loan, or contract. These requirements are implemented for USEPA in 40 CFR Part 34, which also describes types of activities, such as legislative liaison activities and professional and technical services, which are not subject to this prohibition. Upon award of this contract, Contractor shall complete and submit to the City the certification and disclosure forms in Appendix A and Appendix B to 40 CFR Part 34. Contractor shall also require all subcontractors and suppliers of any tier awarded a subcontract over $100,000 to similarly complete and submit the certification and disclosure forms pursuant to the process set forth in 40 CFR 34.110.

CIVIL RIGHTS, NONDISCRIMINATION, AND EQUAL EMPLOYMENT OPPORTUNITY AUTHORITIES

AGE DISCRIMINATION ACT, SECTION 504 OF THE REHABILITATION ACT, TITLE VI OF THE CIVIL RIGHTS ACT OF 1964, AND SECTION 13 OF THE CLEAN WATER ACT

Suggested Contract Language:

CIVIL RIGHTS OBLIGATIONS. Contractor shall comply with the following federal non-discrimination requirements:

a. Title VI of the Civil Rights Act of 1964, which prohibits discrimination based on race, color, and national origin, including limited English proficiency (LEP). (42 U.S.C 2000D, *et. seq)*

b. Section 504 of the Rehabilitation Act of 1973, which prohibits discrimination against persons with disabilities. (29 U.S.C. 794, supplemented by EO 11914, 41 FR 17871, April 29, 1976 and EO 11250, 30 FR 13003, October 13, 1965)

c. The Age Discrimination Act of 1975, which prohibits age discrimination. (42 U.S.C 6101 *et. seq)*

d. Section 13 of the Federal Water Pollution Control Act Amendments of 1972, which prohibits discrimination on the basis of sex.

e. 40 CFR Part 7, as it relates to the foregoing.

EQUAL EMPLOYMENT OPPORTUNITY

Required *Contract Language. This language must be included verbatim:*

Equal Employment Opportunity (EEO). The Contractor shall comply with Executive Order 11246, entitled 'Equal Employment Opportunity,' as amended by Executive Order 11375, and as supplemented in Department of Labor regulations (41 CFR Part 60). (EO 11246, 30 FR 12319, September 28, 1965)

Contractor's compliance with Executive order 11246 shall be based on implementation of the Equal Opportunity Clause, and specific affirmative active obligations required by the Standard Federal Equal Employment Opportunity Construction Contract Specifications, as set forth in 41 CFR Part 60-4.

During the performance of this contract, the contractor agrees as follows:

1) The contractor will not discriminate against any employee or applicant for employment because of race, color, religion, sex, sexual orientation, gender identity, or national origin. The contractor will take affirmative action to ensure that applicants are employed, and that employees are treated during employment, without regard to their race, color, religion, sex, sexual orientation, gender identity, or national origin. Such action shall include, but not be limited to the following: employment, upgrading, demotion, or transfer; recruitment or recruitment advertising; layoff or termination; rates of pay or other forms of compensation; and selection for training, including apprenticeship. The contractor agrees to post in conspicuous places, available to employees and applicants for employment, notices

to be provided by the contracting officer setting forth the provisions of this nondiscrimination clause.

2) The contractor will, in all solicitations or advancements for employees placed by or on behalf of the contractor, state that all qualified applicants will receive consideration for employment without regard to race, color, religion, sex, sexual orientation, gender identity, or national origin.
3) The contractor will not discharge or in any other manner discriminate against any employee or applicant for employment because such employee or applicant has inquired about, discussed, or disclosed the compensation of the employee or applicant or another employee or applicant. This provision shall not apply to instances in which an employee who has access to the compensation information of other employees or applicants as a part of such employee's essential job functions discloses the compensation of such other employees or applicants to individuals who do not otherwise have access to such information, unless such disclosure is in response to a formal complaint or charge, in furtherance of an investigation, proceeding, hearing, or action, including an investigation conducted by the employer, or is consistent with the contractor's legal duty to furnish information.
4) The contractor will send to each labor union or representative of workers with which he has a collective bargaining agreement or other contract or understanding, a notice, to be provided by the agency contracting officer, advising the labor union or workers' representative of the contractor's commitments under Section 202 of Executive Order No. 11246 of September 24, 1965, and shall post copies of the notice in conspicuous places available to employees and applicants for employment.
5) The contractor will comply with all provisions of Executive Order No. 11246 of Sept. 24, 1965, and of the rules, regulations, and relevant orders of the Secretary of Labor.
6) The contractor will furnish all information and reports required by Executive Order No. 11246 of September 24, 1965, and by the rules, regulations, and orders of the Secretary of Labor, or pursuant thereto, and will permit access to his books, records, and accounts by the contracting agency and the Secretary of Labor for purposes of investigation to ascertain compliance with such rules, regulations, and orders.
7) In the event of the contractor's noncompliance with the nondiscrimination clauses of this contract or with any of such rules, regulations, or orders, this contract may be cancelled, terminated, or suspended in whole or in part and the contractor may be declared ineligible for further Government contracts in accordance with procedures authorized in Executive Order No. 11246 of Sept. 24, 1965, and such other sanctions may be imposed and remedies invoked as provided in Executive Order No. 11246 of September 24, 1965, or by rule, regulation, or order of the Secretary of Labor, or as otherwise provided by law.
8) The contractor will include the provisions of paragraphs (1) through (8) in every subcontract or purchase order unless exempted by rules, regulations, or orders of the Secretary of Labor issued pursuant to Section 204 of Executive Order No. 11246 of September 24, 1965, so that such provisions will be binding upon each subcontractor or vendor. The contractor will take such action with respect to any subcontract or purchase order as may be directed by the Secretary of Labor as a means of enforcing such provisions including sanctions for noncompliance: Provided, however, that in the event the contractor becomes involved in, or is threatened with, litigation with a subcontractor or vendor as a result of such direction, the contractor may request the United States to enter into such litigation to protect the interests of the United States. [Sec. 202 amended by EO 11375 of Oct. 13, 1967, 32 FR 14303, 3 CFR, 1966–1970 Comp., p. 684, EO 12086 of Oct. 5, 1978, 43 FR 46501, 3 CFR, 1978 Comp.,

p. 230, EO 13665 of April 8, 2014, 79 FR 20749, EO 13672 of July 21, 2014, 79 FR 42971]

Standard Federal Equal Employment Opportunity Construction Contract Specifications. (41 CFR 60-4.3)

1) As used in these specifications:
   a) "Covered area" means the geographical area described in the solicitation from which this contract resulted;
   b) "Director" means Director, Office of Federal Contract Compliance Programs, United States Department of Labor, or any person to whom the Director delegates authority;
   c) "Employer identification number" means the Federal Social Security number used on the Employer's Quarterly Federal Tax Return, U.S. Treasury Department Form 941.
   d) "Minority" includes:
      i) Black (all persons having origins in any of the Black African racial groups not of Hispanic origin);
      ii) Hispanic (all persons of Mexican, Puerto Rican, Cuban, Central or South American or other Spanish Culture or origin, regardless of race);
      iii) Asian and Pacific Islander (all persons having origins in any of the original peoples of the Far East, Southeast Asia, the Indian Subcontinent, or the Pacific Islands); and
      iv) American Indian or Alaskan Native (all persons having origins in any of the original peoples of North America and maintaining identifiable tribal affiliations through membership and participation or community identification).
2) Whenever the Contractor, or any Subcontractor at any tier, subcontracts a portion of the work involving any construction trade, it shall physically include in each subcontract in excess of $10,000 the provisions of these specifications and the Notice which contains the applicable goals for minority and female participation and which is set forth in the solicitations from which this contract resulted.
3) If the Contractor is participating (pursuant to 41 CFR 60-4.5) in a Hometown Plan approved by the U.S. Department of Labor in the covered area either individually or through an association, its affirmative action obligations on all work in the Plan area (including goals and timetables) shall be in accordance with that Plan for those trades which have unions participating in the Plan. Contractors must be able to demonstrate their participation in and compliance with the provisions of any such Hometown Plan. Each Contractor or Subcontractor participating in an approved Plan is individually required to comply with its obligations under the EEO clause, and to make a good faith effort to achieve each goal under the Plan in each trade in which it has employees. The overall good faith performance by other Contractors or Subcontractors toward a goal in an approved Plan does not excuse any covered Contractor's or Subcontractor's failure to take good faith efforts to achieve the Plan goals and timetables.
4) The Contractor shall implement the specific affirmative action standards provided in paragraphs 7 a through p of these specifications. The goals set forth in the solicitation from which this contract resulted are expressed as percentages of the total hours of employment and training of minority and female utilization the Contractor should reasonably be able to achieve in each construction trade in which it has employees in the covered area. Covered Construction contractors performing construction work in geographical areas where they do not have a Federal or federally assisted construction contract shall apply the minority and female goals established for the geographical area

where the work is being performed. Goals are published periodically in the Federal Register in notice form, and such notices may be obtained from any Office of Federal Contract Compliance Programs office or from Federal procurement contracting officers. The Contractor is expected to make substantially uniform progress in meeting its goals in each craft during the period specified.

5) Neither the provisions of any collective bargaining agreement, nor the failure by a union with whom the Contractor has a collective bargaining agreement, to refer either minorities or women shall excuse the Contractor's obligations under these specifications, Executive Order 11246, or the regulations promulgated pursuant thereto.
6) In order for the nonworking training hours of apprentices and trainees to be counted in meeting the goals, such apprentices and trainees must be employed by the Contractor during the training period, and the Contractor must have made a commitment to employ the apprentices and trainees at the completion of their training, subject to the availability of employment opportunities. Trainees must be trained pursuant to training programs approved by the U.S. Department of Labor.
7) The Contractor shall take specific affirmative actions to ensure equal employment opportunity. The evaluation of the Contractor's compliance with these specifications shall be based upon its effort to achieve maximum results from its actions. The Contractor shall document these efforts fully, and shall implement affirmative action steps at least as extensive as the following:
    a) Ensure and maintain a working environment free of harassment, intimidation, and coercion at all sites, and in all facilities at which the Contractor's employees are assigned to work. The Contractor, where possible, will assign two or more women to each construction project. The Contractor shall specifically ensure that all foremen, superintendents, and other on-site supervisory personnel are aware of and carry out the Contractor's obligation to maintain such a working environment, with specific attention to minority or female individuals working at such sites or in such facilities.
    b) Establish and maintain a current list of minority and female recruitment sources, provide written notification to minority and female recruitment sources and to community organizations when the Contractor or its unions have employment opportunities available, and maintain a record of the organizations' responses.
    c) Maintain a current file of the names, addresses and telephone numbers of each minority and female off-the-street applicant and minority or female referral from a union, a recruitment source or community organization and of what action was taken with respect to each such individual. If such individual was sent to the union hiring hall for referral and was not referred back to the Contractor by the union or, if referred, not employed by the Contractor, this shall be documented in the file with the reason therefor, along with whatever additional actions the Contractor may have taken.
    d) Provide immediate written notification to the Director when the union or unions with which the Contractor has a collective bargaining agreement has not referred to the Contractor a minority person or woman sent by the Contractor, or when the Contractor has other information that the union referral process has impeded the Contractor's efforts to meet its obligations.
    e) Develop on-the-job training opportunities and/or participate in training programs for the area which expressly include minorities and women, including upgrading programs and apprenticeship and trainee programs relevant to the Contractor's employment needs, especially those programs

funded or approved by the Department of Labor. The Contractor shall provide notice of these programs to the sources compiled under 7b above.

f) Disseminate the Contractor's EEO policy by providing notice of the policy to unions and training programs and requesting their cooperation in assisting the Contractor in meeting its EEO obligations; by including it in any policy manual and collective bargaining agreement; by publicizing it in the company newspaper, annual report, etc.; by specific review of the policy with all management personnel and with all minority and female employees at least once a year; and by posting the company EEO policy on bulletin boards accessible to all employees at each location where construction work is performed.

g) Review, at least annually, the company's EEO policy and affirmative action obligations under these specifications with all employees having any responsibility for hiring, assignment, layoff, termination or other employment decisions including specific review of these items with onsite supervisory personnel such as Superintendents, General Foremen, etc., prior to the initiation of construction work at any job site. A written record shall be made and maintained identifying the time and place of these meetings, persons attending, subject matter discussed, and disposition of the subject matter.

h) Disseminate the Contractor's EEO policy externally by including it in any advertising in the news media, specifically including minority and female news media, and providing written notification to and discussing the Contractor's EEO policy with other Contractors and Subcontractors with whom the Contractor does or anticipates doing business.

i) Direct its recruitment efforts, both oral and written, to minority, female and community organizations, to schools with minority and female students and to minority and female recruitment and training organizations serving the Contractor's recruitment area and employment needs. Not later than one month prior to the date for the acceptance of applications for apprenticeship or other training by any recruitment source, the Contractor shall send written notification to organizations such as the above, describing the openings, screening procedures, and tests to be used in the selection process.

j) Encourage present minority and female employees to recruit other minority persons and women and, where reasonable, provide after school, summer and vacation employment to minority and female youth both on the site and in other areas of a Contractor's work force.

k) Validate all tests and other selection requirements where there is an obligation to do so under 41 CFR part 60-3.

l) Conduct, at least annually, an inventory and evaluation at least of all minority and female personnel for promotional opportunities and encourage these employees to seek or to prepare for, through appropriate training, etc., such opportunities.

m) Ensure that seniority practices, job classifications, work assignments and other personnel practices, do not have a discriminatory effect by continually monitoring all personnel and employment related activities to ensure that the EEO policy and the Contractor's obligations under these specifications are being carried out.

n) Ensure that all facilities and company activities are non-segregated except that separate or single-user toilet and necessary changing facilities shall be provided to assure privacy between the sexes.

o) Document and maintain a record of all solicitations of offers for subcontracts from minority and

female construction contractors and suppliers, including circulation of solicitations to minority and female contractor associations and other business associations.

p) Conduct a review, at least annually, of all supervisors' adherence to and performance under the Contractor's EEO policies and affirmative action obligations.

8) Contractors are encouraged to participate in voluntary associations which assist in fulfilling one or more of their affirmative action obligations (7a through p). The efforts of a contractor association, joint contractor-union, contractor-community, or other similar group of which the contractor is a member and participant, may be asserted as fulfilling any one or more of its obligations under 7a through p of these Specifications provided that the contractor actively participates in the group, makes every effort to assure that the group has a positive impact on the employment of minorities and women in the industry, ensures that the concrete benefits of the program are reflected in the Contractor's minority and female workforce participation, makes a good faith effort to meet its individual goals and timetables, and can provide access to documentation which demonstrates the effectiveness of actions taken on behalf of the Contractor. The obligation to comply, however, is the Contractor's and failure of such a group to fulfill an obligation shall not be a defense for the Contractor's noncompliance.

9) A single goal for minorities and a separate single goal for women have been established. The Contractor, however, is required to provide equal employment opportunity and to take affirmative action for all minority groups, both male and female, and all women, both minority and non-minority. Consequently, the Contractor may be in violation of the Executive Order if a particular group is employed in a substantially disparate manner (for example, even though the Contractor has achieved its goals for women generally, the Contractor may be in violation of the Executive Order if a specific minority group of women is underutilized).

10) The Contractor shall not use the goals and timetables or affirmative action standards to discriminate against any person because of race, color, religion, sex, sexual orientation, gender identity, or national origin.

11) The Contractor shall not enter into any Subcontract with any person or firm debarred from Government contracts pursuant to Executive Order 11246.

12) The Contractor shall carry out such sanctions and penalties for violation of these specifications and of the Equal Opportunity Clause, including suspension, termination and cancellation of existing subcontracts as may be imposed or ordered pursuant to Executive Order 11246, as amended, and its implementing regulations, by the Office of Federal Contract Compliance Programs. Any Contractor who fails to carry out such sanctions and penalties shall be in violation of these specifications and Executive Order 11246, as amended.

13) The Contractor, in fulfilling its obligations under these specifications, shall implement specific affirmative action steps, at least as extensive as those standards prescribed in paragraph 7 of these specifications, so as to achieve maximum results from its efforts to ensure equal employment opportunity. If the Contractor fails to comply with the requirements of the Executive Order, the implementing regulations, or these specifications, the Director shall proceed in accordance with 41 CFR 60-4.8.

14) The Contractor shall designate a responsible official to monitor all employment related activity to ensure that the company EEO policy is being carried out, to submit reports relating to the provisions

hereof as may be required by the Government and to keep records. Records shall at least include for each employee the name, address, telephone numbers, construction trade, union affiliation if any, employee identification number when assigned, social security number, race, sex, status (e.g., mechanic, apprentice trainee, helper, or laborer), dates of changes in status, hours worked per week in the indicated trade, rate of pay, and locations at which the work was performed. Records shall be maintained in an easily understandable and retrievable form; however, to the degree that existing records satisfy this requirement, contractors shall not be required to maintain separate records.

15) Nothing herein provided shall be construed as a limitation upon the application of other laws which establish different standards of compliance or upon the application of requirements for the hiring of local or other area residents (e.g., those under the Public Works Employment Act of 1977 and the Community Development Block Grant Program).

Segregated Facilities. (41 CFR 60-1.8) The contractor must ensure that facilities provided for employees are provided in such a manner that segregation on the basis of race, color, religion, sex, sexual orientation, gender identity, or national origin cannot result. The contractor may neither require such segregated use by written or oral policies nor tolerate such use by employee custom. The contractor's obligation extends further to ensuring that its employees are not assigned to perform their services at any location, under the contractor's control, where the facilities are segregated. This obligation extends to all contracts containing the equal opportunity clause regardless of the amount of the contract. The term “facilities,” as used in this section, means waiting rooms, work areas, restaurants and other eating areas, time clocks, restrooms, wash rooms, locker rooms, and other storage or dressing areas, parking lots, drinking fountains, recreation or entertainment areas, transportation, and housing provided for employees; Provided, That separate or single-user restrooms and necessary dressing or sleeping areas shall be provided to assure privacy between the sexes.

Required *language in bid solicitations (or equivalent):*

Notice of Requirement for Affirmative Action to Ensure Equal Employment Opportunity (Executive Order 11246) located at 41 CFR § 60-4.2:

1. The Offeror's or Bidder's attention is called to the “Equal Opportunity Clause” and the “Standard Federal Equal Employment Specifications” set forth herein.
2. The goals and timetables for minority and female participation, expressed in percentage terms for the Contractor's aggregate workforce in each trade on all construction work in the covered area, are as follows:

Timetables	Goals for minority participation for each trade	Goals for female participation in each trade
	Insert goals for each year[1]	6.9%[2]

These goals are applicable to all the Contractor's construction work (whether or not it is Federal or federally assisted) performed in the covered area. If the contractor performs construction work

[1] Goals can be found at: https://www.dol.gov/agencies/ofccp/construction

[2] Nationwide goal for all covered areas

in a geographical area located outside of the covered area, it shall apply the goals established for such geographical area where the work is actually performed. With regard to this second area, the contractor also is subject to the goals for both its federally involved and non-federally involved construction.

The Contractor's compliance with the Executive Order and the regulations in 41 CFR part 60-4 shall be based on its implementation of the Equal Opportunity Clause, specific affirmative action obligations required by the specifications set forth in 41 CFR 60-4.3(a), and its efforts to meet the goals. The hours of minority and female employment and training must be substantially uniform throughout the length of the contract, and in each trade, and the contractor shall make a good faith effort to employ minorities and women evenly on each of its projects. The transfer of minority or female employees or trainees from Contractor to Contractor or from project to project for the sole purpose of meeting the Contractor's goals shall be a violation of the contract, the Executive Order and the regulations in 41 CFR part 60-4. Compliance with the goals will be measured against the total work hours performed.

3. The Contractor shall provide written notification to the Director of the Office of Federal Contract Compliance Programs within 10 working days of award of any construction subcontract in excess of $10,000 at any tier for construction work under the contract resulting from this solicitation. The notification shall list the name, address and telephone number of the subcontractor; employer identification number of the subcontractor; estimated dollar amount of the subcontract; estimated starting and completion dates of the subcontract; and the geographical area in which the subcontract is to be performed.
4. As used in this Notice, and in the contract resulting from this solicitation, the “covered area” is (insert description of the geographical areas where the contract is to be performed giving the state, county and city, if any).

PARTICIPATION BY DISADVANTAGED BUSINESS ENTERPRISES IN PROCUREMENT UNDER EPA FINANCIAL ASSISTANCE AGREEMENTS

Note: The WIFIA program only requires use of the EPA DBE program’s six good faith efforts during contract procurement. States may require additional DBE reporting.

Suggested Contract Language:

Disadvantaged Business Enterprises (DBE). The contractor must ensure that the DBE’s six good faith efforts are used during the procurement of subcontractors for the [Project]. The six good faith efforts are found at: https://www.epa.gov/grants/disadvantaged-business-enterprise-program-requirements#sixgoodfaithefforts.

AMERICAN IRON AND STEEL (AIS) REQUIREMENT

Suggested Contract Language:

The Contractor acknowledges to and for the benefit of _____ ("Purchaser") and the United States Environmental Protection Agency ("EPA") that it understands the goods and services under this Agreement are being funded with monies made available by the Water Infrastructure Finance and Innovation Act program of the EPA that has statutory requirements commonly known as "American Iron and Steel" that requires all of the iron and steel products used in the project to be produced in the United States ("American Iron and Steel Requirement") including iron and steel products provided by the Contactor pursuant to this Agreement. The Contractor hereby represents, warrants and covenants to and for the benefit of the Purchaser and the EPA that (a) the Contractor has reviewed and understands the American Iron and Steel Requirement, (b) all of the iron and steel products used in the project will be and/or have been produced in the United States in a manner that complies with the American Iron and Steel Requirement, unless a waiver of the requirement is approved, and (c) the Contractor will provide any further verified information, certification or assurance of compliance with this paragraph, or information necessary to support a waiver of the American Iron and Steel Requirement, as may be requested by the Purchaser or the EPA. Notwithstanding any other provision of this Agreement, any failure to comply with this paragraph by the Contractor shall permit the Purchaser or the EPA to recover as damages against the Contractor any loss, expense, or cost (including without limitation attorney's fees) incurred by the Purchaser or the EPA resulting from any such failure (including without limitation any impairment or loss of funding, whether in whole or in part, from the EPA or any damages owed to the EPA by the Purchaser). While the Contractor has no direct contractual privity with the EPA, as a lender to the Purchaser for the funding of its project, the Purchaser and the Contractor agree that the EPA is a third-party beneficiary and neither this paragraph (nor any other provision of this Agreement necessary to give this paragraph force or effect) shall be amended or waived without the prior written consent of the EPA.

LABOR LAWS AND STANDARDS

Note that the language below addresses Davis Bacon and Related Acts and incorporates the WIFIA borrower as an authorized representative, in accordance with the WIFIA loan agreement, to ensure compliance with this federal requirement.

***Required** Contract Language.*

Compliance with Davis-Bacon and Related Acts.

(a) In any contract in excess of $2,000 which is entered into for the actual construction, alteration and/or repair, including painting and decorating, of a public building or public work, or building or work financed in whole or in part from Federal funds or in accordance with guarantees of a Federal agency or financed from funds obtained by pledge of any contract of a Federal agency to make a loan, grant or annual contribution (except where a different meaning is expressly indicated), and which is subject to the labor standards provisions of any of the acts listed in 29 C.F.R. § 5.1, the following clauses (or any modifications thereof to meet the particular needs of the agency, provided that such modifications are first approved by the Department of Labor):

(1) Minimum wages.

(i) All laborers and mechanics employed or working upon the site of the work (or under the United States Housing Act of 1937 or under the Housing Act of 1949 in the construction or development of the project), will be paid unconditionally and not less often than once a week, and without subsequent deduction or rebate on any account (except such payroll deductions as are permitted by regulations issued by the Secretary of Labor under the Copeland Act (29 CFR part 3)), the full amount of wages and bona fide fringe benefits (or cash equivalents thereof) due at time of payment computed at rates not less than those contained in the wage determination of the Secretary of Labor which is attached hereto and made a part hereof, regardless of any contractual relationship which may be alleged to exist between the contractor and such laborers and mechanics. Contributions made or costs reasonably anticipated for bona fide fringe benefits under section 1(b)(2) of the Davis-Bacon Act on behalf of laborers or mechanics are considered wages paid to such laborers or mechanics, subject to the provisions of paragraph (a)(1)(iv) of this section; also, regular contributions made or costs incurred for more than a weekly period (but not less often than quarterly) under plans, funds, or programs which cover the particular weekly period, are deemed to be constructively made or incurred during such weekly period. Such laborers and mechanics shall be paid the appropriate wage rate and fringe benefits on the wage determination for the classification of work actually performed, without regard to skill, except as provided in § 5.5(a)(4). Laborers or mechanics performing work in more than one classification may be compensated at the rate specified for each classification for the time actually worked therein: Provided that the employer's payroll records accurately set forth the time spent in each classification in which work is performed. The wage determination (including any additional classification and wage rates conformed under paragraph (a)(1)(ii) of this section) and the Davis-Bacon poster (WH-1321) shall be posted at all times by the contractor and its subcontractors at the site of the work in a prominent and accessible place where it can be

easily seen by the workers.

(ii)

(A) The WIFIA assistance recipient, [name of WIFIA borrower], on behalf of the U.S. Environmental Protection Agency (EPA), shall require that any class of laborers or mechanics, including helpers, which is not listed in the wage determination and which is to be employed under the contract shall be classified in conformance with the wage determination. The WIFIA assistance recipient shall approve an additional classification and wage rate and fringe benefits therefore only when the following criteria have been met:

(1) The work to be performed by the classification requested is not performed by a classification in the wage determination; and

(2) The classification is utilized in the area by the construction industry; and

(3) The proposed wage rate, including any bona fide fringe benefits, bears a reasonable relationship to the wage rates contained in the wage determination.

(B) If the contractor and the laborers and mechanics to be employed in the classification (if known), or their representatives, and the WIFIA assistance recipient agree on the classification and wage rate (including the amount designated for fringe benefits where appropriate), a report of the action taken shall be sent to the Administrator of the Wage and Hour Division (WHD Administrator), U.S. Department of Labor, Washington, DC 20210. The WHD Administrator, or an authorized representative, will approve, modify, or disapprove every additional classification action within 30 days of receipt and so advise the WIFIA assistance recipient or will notify the WIFIA assistance recipient within the 30-day period that additional time is necessary.

(C) In the event the contractor, the laborers or mechanics to be employed in the classification or their representatives, and the WIFIA assistance recipient do not agree on the proposed classification and wage rate (including the amount designated for fringe benefits, where appropriate), the WIFIA assistance recipient shall refer the questions, including the views of all interested parties and the recommendation of the WIFIA assistance recipient, to the WHD Administrator for determination. The WHD Administrator, or an authorized representative, will issue a determination within 30 days of receipt and so advise the WIFIA assistance recipient or will notify the WIFIA assistance recipient within the 30-day period that additional time is necessary.

(D) The wage rate (including fringe benefits where appropriate) determined pursuant to paragraphs (a)(1)(ii) (B) or (C) of this section, shall be paid to all workers performing work in the classification under this contract from the first day on which work is performed in the classification.

(iii) Whenever the minimum wage rate prescribed in the contract for a class of laborers or mechanics includes a fringe benefit which is not expressed as an hourly rate, the contractor shall either pay the benefit as stated in the wage determination or shall pay another bona fide fringe benefit or an hourly cash equivalent thereof.

(iv) If the contractor does not make payments to a trustee or other third person, the contractor may consider as part of the wages of any laborer or mechanic the amount of any costs

reasonably anticipated in providing bona fide fringe benefits under a plan or program, Provided, That the Secretary of Labor has found, upon the written request of the contractor, that the applicable standards of the Davis-Bacon Act have been met. The Secretary of Labor may require the contractor to set aside in a separate account assets for the meeting of obligations under the plan or program.

(2) Withholding. [name of WIFIA borrower], shall upon written request of the WIFIA Director or an authorized representative of the Department of Labor withhold or cause to be withheld from the contractor under this contract or any other Federal contract with the same prime contractor, or any other federally-assisted contract subject to Davis-Bacon prevailing wage requirements, which is held by the same prime contractor, so much of the accrued payments or advances as may be considered necessary to pay laborers and mechanics, including apprentices, trainees, and helpers, employed by the contractor or any subcontractor the full amount of wages required by the contract. In the event of failure to pay any laborer or mechanic, including any apprentice, trainee, or helper, employed or working on the site of the work (or under the United States Housing Act of 1937 or under the Housing Act of 1949 in the construction or development of the project), all or part of the wages required by the contract, the WIFIA Director may, after written notice to the contractor, sponsor, applicant, or owner, take such action as may be necessary to cause the suspension of any further payment, advance, or guarantee of funds until such violations have ceased.

(3) Payrolls and basic records.

(i) Payrolls and basic records relating thereto shall be maintained by the contractor during the course of the work and preserved for a period of three years thereafter for all laborers and mechanics working at the site of the work (or under the United States Housing Act of 1937, or under the Housing Act of 1949, in the construction or development of the project). Such records shall contain the name, address, and social security number of each such worker, his or her correct classification, hourly rates of wages paid (including rates of contributions or costs anticipated for bona fide fringe benefits or cash equivalents thereof of the types described in section 1(b)(2)(B) of the Davis-Bacon Act), daily and weekly number of hours worked, deductions made and actual wages paid. Whenever the Secretary of Labor has found under 29 CFR 5.5(a)(1)(iv) that the wages of any laborer or mechanic include the amount of any costs reasonably anticipated in providing benefits under a plan or program described in section 1(b)(2)(B) of the Davis-Bacon Act, the contractor shall maintain records which show that the commitment to provide such benefits is enforceable, that the plan or program is financially responsible, and that the plan or program has been communicated in writing to the laborers or mechanics affected, and records which show the costs anticipated or the actual cost incurred in providing such benefits. Contractors employing apprentices or trainees under approved programs shall maintain written evidence of the registration of apprenticeship programs and certification of trainee programs, the registration of the apprentices and trainees, and the ratios and wage rates prescribed in the applicable programs.

(ii) {no text here}

(A) The contractor shall submit weekly for each week in which any contract work is performed a copy of all payrolls to [name of WIFIA borrower] . The payrolls submitted shall set out accurately and completely all of the information required to be maintained under 29 CFR 5.5(a)(3)(i), except that full social security numbers and home addresses shall not be included on weekly transmittals. Instead the payrolls shall only need to include an individually identifying number for each employee (e.g., the last four digits of the employee's social security number). The required weekly payroll information may be submitted in any form desired. Optional Form WH-347 is available for this purpose from the Wage and Hour Division Web site at http://www.dol.gov/esa/whd/forms/wh347instr.htm or its successor site. The prime contractor is responsible for the submission of copies of payrolls by all subcontractors. Contractors and subcontractors shall maintain the full social security number and current address of each covered worker, and shall provide them upon request to [name of WIFIA borrower], for transmission to the EPA, the contractor, or the Wage and Hour Division of the Department of Labor for purposes of an investigation or audit of compliance with prevailing wage requirements. It is not a violation of this section for a prime contractor to require a subcontractor to provide addresses and social security numbers to the prime contractor for its own records, without weekly submission to[name of WIFIA borrower]).

(B) Each payroll submitted shall be accompanied by a "Statement of Compliance," signed by the contractor or subcontractor or his or her agent who pays or supervises the payment of the persons employed under the contract and shall certify the following:

(1) That the payroll for the payroll period contains the information required to be provided under § 5.5 (a)(3)(ii) of Regulations, 29 CFR part 5, the appropriate information is being maintained under § 5.5 (a)(3)(i) of Regulations, 29 CFR part 5, and that such information is correct and complete;

(2) That each laborer or mechanic (including each helper, apprentice, and trainee) employed on the contract during the payroll period has been paid the full weekly wages earned, without rebate, either directly or indirectly, and that no deductions have been made either directly or indirectly from the full wages earned, other than permissible deductions as set forth in Regulations, 29 CFR part 3;

(3) That each laborer or mechanic has been paid not less than the applicable wage rates and fringe benefits or cash equivalents for the classification of work performed, as specified in the applicable wage determination incorporated into the contract.

(C) The weekly submission of a properly executed certification set forth on the reverse side of Optional Form WH-347 shall satisfy the requirement for submission of the "Statement of Compliance" required by paragraph (a)(3)(ii)(B) of this section.

(D) The falsification of any of the above certifications may subject the contractor or subcontractor to civil or criminal prosecution under section 1001 of title 18 and section 231 of title 31 of the United States Code.

(iii) The contractor or subcontractor shall make the records required under paragraph (a)(3)(i) of this section available for inspection, copying, or transcription by authorized representatives of [name of the borrower, EPA, or the Department of Labor, and shall permit such

representatives to interview employees during working hours on the job. If the contractor or subcontractor fails to submit the required records or to make them available, the EPA may, after written notice to the [name of WIFIA borrower], take such action as may be necessary to cause the suspension of any further payment, advance, or guarantee of funds. Furthermore, failure to submit the required records upon request or to make such records available may be grounds for debarment action pursuant to 29 CFR 5.12.

(4) Apprentices and trainees –

(i) Apprentices. Apprentices will be permitted to work at less than the predetermined rate for the work they performed when they are employed pursuant to and individually registered in a bona fide apprenticeship program registered with the U.S. Department of Labor, Employment and Training Administration, Office of Apprenticeship Training, Employer and Labor Services, or with a State Apprenticeship Agency recognized by the Office, or if a person is employed in his or her first 90 days of probationary employment as an apprentice in such an apprenticeship program, who is not individually registered in the program, but who has been certified by the Office of Apprenticeship Training, Employer and Labor Services or a State Apprenticeship Agency (where appropriate) to be eligible for probationary employment as an apprentice. The allowable ratio of apprentices to journeymen on the job site in any craft classification shall not be greater than the ratio permitted to the contractor as to the entire work force under the registered program. Any worker listed on a payroll at an apprentice wage rate, who is not registered or otherwise employed as stated above, shall be paid not less than the applicable wage rate on the wage determination for the classification of work actually performed. In addition, any apprentice performing work on the job site in excess of the ratio permitted under the registered program shall be paid not less than the applicable wage rate on the wage determination for the work actually performed. Where a contractor is performing construction on a project in a locality other than that in which its program is registered, the ratios and wage rates (expressed in percentages of the journeyman's hourly rate) specified in the contractor's or subcontractor's registered program shall be observed. Every apprentice must be paid at not less than the rate specified in the registered program for the apprentice's level of progress, expressed as a percentage of the journeymen hourly rate specified in the applicable wage determination. Apprentices shall be paid fringe benefits in accordance with the provisions of the apprenticeship program. If the apprenticeship program does not specify fringe benefits, apprentices must be paid the full amount of fringe benefits listed on the wage determination for the applicable classification. If the WHD Administrator determines that a different practice prevails for the applicable apprentice classification, fringes shall be paid in accordance with that determination. In the event the Office of Apprenticeship Training, Employer and Labor Services, or a State Apprenticeship Agency recognized by the Office, withdraws approval of an apprenticeship program, the contractor will no longer be permitted to utilize apprentices at less than the applicable predetermined rate for the work performed until an acceptable program is approved.

(ii) Trainees. Except as provided in 29 CFR 5.16, trainees will not be permitted to work at less than the predetermined rate for the work performed unless they are employed pursuant to

and individually registered in a program which has received prior approval, evidenced by formal certification by the U.S. Department of Labor, Employment and Training Administration. The ratio of trainees to journeymen on the job site shall not be greater than permitted under the plan approved by the Employment and Training Administration. Every trainee must be paid at not less than the rate specified in the approved program for the trainee's level of progress, expressed as a percentage of the journeyman hourly rate specified in the applicable wage determination. Trainees shall be paid fringe benefits in accordance with the provisions of the trainee program. If the trainee program does not mention fringe benefits, trainees shall be paid the full amount of fringe benefits listed on the wage determination unless the WHD Administrator determines that there is an apprenticeship program associated with the corresponding journeyman wage rate on the wage determination which provides for less than full fringe benefits for apprentices. Any employee listed on the payroll at a trainee rate who is not registered and participating in a training plan approved by the Employment and Training Administration shall be paid not less than the applicable wage rate on the wage determination for the classification of work actually performed. In addition, any trainee performing work on the job site in excess of the ratio permitted under the registered program shall be paid not less than the applicable wage rate on the wage determination for the work actually performed. In the event the Employment and Training Administration withdraws approval of a training program, the contractor will no longer be permitted to utilize trainees at less than the applicable predetermined rate for the work performed until an acceptable program is approved.

(iii) Equal employment opportunity. The utilization of apprentices, trainees and journeymen under this part shall be in conformity with the equal employment opportunity requirements of Executive Order 11246, as amended, and 29 CFR part 30.

(5) Compliance with Copeland Act requirements. The contractor shall comply with the requirements of 29 CFR part 3, which are incorporated by reference in this contract.

(6) Subcontracts. The contractor or subcontractor shall insert in any subcontracts the clauses contained in 29 CFR 5.5(a)(1) through (10) and such other clauses as the EPA may by appropriate instructions require, and also a clause requiring the subcontractors to include these clauses in any lower tier subcontracts. The prime contractor shall be responsible for the compliance by any subcontractor or lower tier subcontractor with all the contract clauses in 29 CFR 5.5.

(7) Contract termination: debarment. A breach of the contract clauses in 29 CFR 5.5 may be grounds for termination of the contract, and for debarment as a contractor and a subcontractor as provided in 29 CFR 5.12.

(8) Compliance with Davis-Bacon and Related Act requirements. All rulings and interpretations of the Davis-Bacon and Related Acts contained in 29 CFR parts 1, 3, and 5 are herein incorporated by reference in this contract.

(9) Disputes concerning labor standards. Disputes arising out of the labor standards provisions of this contract shall not be subject to the general disputes clause of this contract. Such disputes shall be resolved in accordance with the procedures of the Department of Labor set forth in 29 CFR parts 5, 6, and 7. Disputes within the meaning of this clause include disputes between the contractor (or any of its subcontractors) and [name of WIFIA borrower], EPA, the U.S.

Department of Labor, or the employees or their representatives.

(10) Certification of eligibility.

(i) By entering into this contract, the contractor certifies that neither it (nor he or she) nor any person or firm who has an interest in the contractor's firm is a person or firm ineligible to be awarded Government contracts by virtue of section 3(a) of the Davis-Bacon Act or 29 CFR 5.12(a)(1).

(ii) No part of this contract shall be subcontracted to any person or firm ineligible for award of a Government contract by virtue of section 3(a) of the Davis-Bacon Act or 29 CFR 5.12(a)(1).

(iii) The penalty for making false statements is prescribed in the U.S. Criminal Code, 18 U.S.C. 1001.

(b) Contract Work Hours and Safety Standards Act. The following clauses set forth in paragraphs (b)(1), (2), (3), and (4) of this section shall be inserted in full in any contract in an amount in excess of $100,000 and subject to the overtime provisions of the Contract Work Hours and Safety Standards Act. These clauses shall be inserted in addition to the clauses required by § 5.5(a) or § 4.6 of part 4 of this title. As used in this paragraph, the terms laborers and mechanics include watchmen and guards.

(1) Overtime requirements. No contractor or subcontractor contracting for any part of the conract work which may require or involve the employment of laborers or mechanics shall require or permit any such laborer or mechanic in any workweek in which he or she is employedon such work to work in excess of forty hours in such workweek unless such laborer or mechanic receives compensation at a rate not less than one and one-half times the basic rate of pay for all hours worked in excess of forty hours in such workweek.

(2) Violation; liability for unpaid wages; liquidated damages. In the event of any violation of the clause set forth in paragraph (b)(1) of this section the contractor and any subcontractor responsible therefor shall be liable for the unpaid wages. In addition, such contractor and subcontractor shall be liable to the United States (in the case of work done under contract for the District of Columbia or a territory, to such District or to such territory), for liquidated damages. Such liquidated damages shall be computed with respect to each individual laborer or mechanic, including watchmen and guards, employed in violation of the clause set forth inparagraph (b)(1) of this section, in the sum of $25 for each calendar day on which such individual was required or permitted to work in excess of the standard workweek of forty hours without payment of the overtime wages required by the clause set forth in paragraph (b)(1) of this section.

(3) Withholding for unpaid wages and liquidated damages. The [name of WIFIA borrower] shall upon its own action or upon written request of an authorized representative of the Department of Labor, or the EPA, withhold or cause to be withheld, from any moneys payable on account of work performed by the contractor or subcontractor under any such contract or any other Federal contract with the same prime contractor, or any other federally-assisted contract subject to the Contract Work Hours and Safety Standards Act, which is held by the same prime contractor, such sums as may be determined to be necessary to satisfy any liabilities of such contractor or subcontractor for unpaid wages and liquidated damages as provided in the clause set forth in paragraph (b)(2) of this section.

(4) Subcontracts. The contractor or subcontractor shall insert in any subcontracts the clauses set forth in paragraph (b)(1) through (4) of this section and also a clause requiring the subcontractors

to include these clauses in any lower tier subcontracts. The prime contractor shall be responsible for compliance by any subcontractor or lower tier subcontractor with the clauses set forth in paragraphs (b)(1) through (4) of this section.

(c) In addition to the clauses contained in paragraph (b), in any contract subject only to the Contract Work Hours and Safety Standards Act and not to any of the other statutes cited in § 5.1, the contractor or subcontractor shall maintain payrolls and basic payroll records during the course of the work and shall preserve them for a period of three years from the completion of the contractfor all laborers and mechanics, including guards and watchmen, working on the contract. Such records shall contain the name and address of each such employee, social security number, correct classifications, hourly rates of wages paid, daily and weekly number of hours worked, deductions made, and actual wages paid. Further, the EPA shall cause or require the [name of WIFIA borrower] to insert in any such contract a clause providing that the records to be maintained under this paragraph shall be made available by the contractor or subcontractor for inspection, copying, or transcription by authorized representatives of the [name of WIFIA borrower], EPA and the Department of Labor, and the contractor or subcontractor will permit such representatives to interview employees during working hours on the job.

LATEST UPDATES ON FEDERAL REQUIREMENTS

PROHIBITION ON CERTAIN TELECOMMUNICATIONS AND VIDEO SURVEILLANCE SERVICES OR EQUIPMENT

Suggested Contract Language:

Prohibition on Certain Telecommunications and Video Surveillance Services or Equipment (Effective August 13, 2020). The John S. McCain National Defense Authorization Act for Fiscal Year 2019 (P.L. 115-232), at Section 889, prohibits EPA financial assistance recipients, including WIFIA borrowers, from expending loan funds to procure or obtain; extend or renew a contract to procure or obtain; or enter into a contract (or extend or renew a contract) to procure or obtain equipment, services, or systems that use covered telecommunications equipment or services as a substantial or essential component of any system, or as critical technology as part of any system. As described in the Act, "covered telecommunications equipment or services" means:

a) Telecommunications equipment produced by Huawei Technologies Company or ZTE Corporation (or any subsidiary or affiliate of such entities).
b) For the purpose of public safety, security of government facilities, physical security surveillance of critical infrastructure, and other national security purposes, video surveillance and telecommunications equipment produced by Hytera Communications Corporation, Hangzhou Hikvision Digital Technology Company, or Dahua Technology Company (or any subsidiary or affiliate of such entities).
c) Telecommunications or video surveillance services provided by such entities or using such equipment.
d) Telecommunications or video surveillance equipment or services produced or provided by an entity that the Secretary of Defense, in consultation with the Director of the National Intelligence or the Director of the Federal Bureau of Investigation, reasonably believes to be an entity owned or controlled by, or otherwise connected to, the government of a covered foreign country.

The Act does not prohibit:

a) Procuring with an entity to provide a service that connects to the facilities of a third-party, such as backhaul, roaming, or interconnection arrangements.
b) Telecommunications equipment that cannot route or redirect user data traffic or permit visibility into any user data or packets that such equipment transmits or otherwise handles.

DOCUMENT 00811
SPECIAL PROVISIONS
MONTHLY PRICE ADJUSTMENT FOR HOT MIX ASPHALT (HMA) MIXTURES
ENGLISH UNITS
Revised: 02/02/2009

This provision applies to all projects using greater than 100 tons of hot mix asphalt (HMA) mixtures containing liquid asphalt cement as stipulated in the Notice to Contractors section of the bid documents.

The Price Adjustment will be based on the variance in price for the liquid asphalt component only from the Base Price to the Period Price. It shall not include transportation or other charges. This Price Adjustment will occur on a monthly basis.

Base Price
The Base Price of liquid asphalt on a project as listed in the Notice to Contractors section of the bid documents is a fixed price determined at the time of bid by the Department by using the same method as for the determination of the Period Price detailed below.

Period Price
Please note that, starting December 15, 2008, two sets of period prices will be posted each month on the MassHighway website at http://www.mhd.state.ma.us/. They will be labeled "New Asphalt Period Price Method" and "Old Asphalt Period Price Method".

New Asphalt Period Price Method
The "New Asphalt Period Price Method" is for contracts bid after December 15, 2008 and will show the Period Price of liquid asphalt for each monthly period as determined by MassHighway using the average selling price per standard ton of PG64-28 paving grade (primary binder classification) asphalt, FOB manufacturer's terminal, as listed under the "East Coast Market - New England, Boston, Massachusetts area" section of the Poten & Partners, Inc. "Asphalt Weekly Monitor". This average selling price is listed in the issue having a publication date of the second Friday of the month and will be posted as the Period Price for that month. MassHighway will post this Period Price on this website within two (2) business days following their receipt of the relevant issue of the "Asphalt Weekly Monitor". Poten and Partners has granted MassHighway the right to publish this specific asphalt price information sourced from the Asphalt Weekly Monitor.

Old Asphalt Period Price Method
The "Old Asphalt Period Price Method" Period Price will be for contracts bid on or before December 15, 2008 and will contain liquid asphalt prices as determined by the old or previous method. These prices will continue to be posted on MassHighway's website until all contracts using the "Old Asphalt Period Price Method" Period Price have been closed.

New and Old Asphalt Period Price Methods
The paragraphs below apply to both the New and the Old Asphalt Period Price Methods.

The Contract Price of the hot mix asphalt mixture will be paid under the respective item in the Contract. The price adjustment, as herein provided, upwards or downwards, will be made after the work has been performed, using the monthly period price for the month during which the work was performed.

The Price Adjustment applies only to the actual virgin liquid asphalt content in the mixture placed on the job in accordance with the Standard Specifications for Highways and Bridges, Division III, Section M3.11.03.

The Price Adjustment will be a separate payment item. It will be determined by multiplying the number of tons of hot mix asphalt mixtures placed during each monthly period times the liquid asphalt content percentage times the variance in price between Base Price and Period Price of liquid asphalt.

This Price Adjustment will be paid only if the variance from the Base Price is 5% or more for a monthly period. The complete adjustment will be paid in all cases with no deduction of the 5% from either upward or downward adjustments.

No Price Adjustment will be allowed beyond the Completion Date of this Contract, unless there is a Department-approved extension of time.

******** END OF DOCUMENT ********

DOCUMENT 00812

SPECIAL PROVISIONS
MONTHLY PRICE ADJUSTMENT FOR DIESEL FUEL AND GASOLINE –
ENGLISH UNITS

Revised: 01/26/2009

This monthly fuel price adjustment is inserted in this contract because the national and worldwide energy situation has made the future cost of fuel unpredictable. This adjustment will provide for either additional compensation to the Contractor or repayment to the Commonwealth, depending on an increase or decrease in the average price of diesel fuel or gasoline.

This adjustment will be based on fuel usage factors for various items of work developed by the Highway Research Board in Circular 158, dated July 1974. These factors will be multiplied by the quantities of work done in each item during each monthly period and further multiplied by the variance in price from the Base Price to the Period Price.

The Base Price of Diesel Fuel and Gasoline will be the price as indicated in the Department's web site (www.mhd.state.ma.us) for the month in which the contract was bid, which includes State Tax.

The Period Price will be the average of prices charged to the State, including State Tax for the bulk purchases made during each month.

This adjustment will be effected only if the variance from the Base Price is 5% or more for a monthly period. The complete adjustment will be paid in all cases with no deduction of the 5% from either upward or downward adjustments.

No adjustment will be paid for work done beyond the extended completion date of any contract.

Any adjustment (increase or decrease) to estimated quantities made to each item at the time of final payment will have the fuel price adjustment figured at the average period price for the entire term of the project for the difference of quantity.

The fuel price adjustment will apply only to the following items of work at the fuel factors shown:

ITEMS COVERED	**FUEL FACTORS**	
	Diesel	**Gasoline**
Excavation: and Borrow Work: Items 120, 120.1, 121, 123, 124, 125, 127, 129.3, 140, 140.1, 141, 142, 143, 144., 150, 150.1, 151 and 151.1 (Both Factors used)	0.29 Gallons / CY.	0.15 Gallons / CY
Surfacing Work: All Items containing Hot Mix Asphalt	2.90 Gallons / Ton	Does Not Apply

******** END OF DOCUMENT ********

DOCUMENT 00814

SPECIAL PROVISIONS
PRICE ADJUSTMENT FOR PORTLAND CEMENT CONCRETE MIXES

January 12, 2009

This provision applies to all projects using greater than 100 Cubic Yards (76 Cubic Meters) of Portland cement concrete containing Portland cement as stipulated in the Notice to Contractors section of the Bid Documents. This Price Adjustment will occur on a monthly basis.

The Price Adjustment will be based on the variance in price for the Portland cement component only from the Base Price to the Period Price. It shall not include transportation or other charges.

The Base Price of Portland cement on a project is a fixed price determined at the time of bid by the Department by using the same method as for the determination of the Period Price (see below) and found in the Notice to Contractors.

The Period Price of Portland cement will be determined by using the latest published price, in dollars per ton (U.S.), for Portland cement (Type I) quoted for Boston, U.S.A. in the **Construction Economics** section of *ENR Engineering News-Record* magazine or at the ENR website http://www.enr.com under **Construction Economics**. The Period Price will be posted on the MassHighway website the Wednesday immediately following the publishing of the monthly price in ENR, which is normally the first week of the month.

The Contract Price of the Portland cement concrete mix will be paid under the respective item in the Contract. The price adjustment, as herein provided, upwards or downwards, will be made after the work has been performed, using the monthly period price for the month during which the work was performed.

The price adjustment applies only to the actual Portland cement content in the mix placed on the job in accordance with the Standard Specifications for Highways and Bridges, Division III, Section M4.02.01. No adjustments will be made for any cement replacement materials such as fly ash or ground granulated blast furnace slag.

The Price Adjustment will be a separate payment item. It will be determined by multiplying the number of cubic yards of Portland cement concrete placed during each monthly period times the Portland cement content percentage times the variance in price between the Base Price and Period Price of Portland cement.

This Price Adjustment will be paid only if the variance from the Base Price is 5% or more for a monthly period. The complete adjustment will be paid in all cases with no deduction of the 5% from either upward or downward adjustments.

No Price Adjustment will be allowed beyond the Completion Date of this Contract, unless there is a Department-approved extension of time.

****
*

END OF DOCUMENT

SECTION 01010

SUMMARY OF WORK

PART 1 - GENERAL

1.01 LOCATION OF WORK:

A. The work of this Contract is located along the length of the pipeline beginning at the inlet works adjacent to the Surge Tank in the vicinity of the Cobble Mountain Hydropower Station in Granville, MA and ending at the downstream end of the existing 42-inch prestressed concrete cylinder pipe (PCCP) Raw Water Conveyance (RWC) pipeline near the Sedimentation Basin at the West Parish Filters site located at 1515 Granville Road, Westfield, MA.

1.02 SCOPE OF WORK:

A. Furnish all labor, materials, equipment, and incidentals necessary at the location defined by the contract drawings, for the demolition of the existing structures and equipment, and for the construction to furnish and install an Energy Dissipation Valve Chamber, Equalization Tank, all equipment, 42-inch steel pipe, 60-inch steel pipe, site work complete as a functional, operating system complete as shown on Drawings, defined in the Technical Specification, and as defined herein.

   Furnish all labor, materials, equipment, and incidentals necessary and make modifications and spot repairs to the 42-inch PCCP RWC pipe complete and ready for operation as shown on the Drawings and specified herein.

B. The Work includes, but is not necessarily limited to, the following major items:

   1. Remove existing discharge structures and steel portion of 42-inch pipeline.

   2. Construct a new Energy Dissipation Valve Chamber to house three Mokveld Energy Dissipation Valves (EDV's), piping and valve, and new Equalization (EQ) Tank.

   3. Construct new 42-inch steel pipeline and connect to existing 42-inch transmission pipeline. Construct 60-inch pipeline stub for future connection.

   4. Replace existing electrical conduits, and installation of new power and control cabinets, conductors, and fiber optic lines.

   5. Civil site work at location of EDV/EQ Tank site, and construction of electrical duct banks, conduits and cables, and fiber optic lines to existing WPWTP facilities.

6. Perform all repairs to pipeline:

    a. Approximately 17 repair classifications have been specified along the 9,300 foot length of the pipeline: both internal and external, as well as the replacement of nineteen (19) pipe segments.

    b. Replacement of eleven (11) existing manways, installation of two (2) new manways, and rehabilitation of two (2) existing manways.

    c. Installation of thirteen (13) new and replacement of one (1) existing combination vacuum/air release valves; and installation of fifteen (15) new precast concrete vaults at manways.

7. Equipment testing, startup and commissioning, and operational demonstration of fully functioning system.
    a. Contractor shall prepare a comprehensive testing plan prior to initiation of startup and commissioning of the fully functioning system
    b. Testing plan shall be approved by the Engineer prior to startup and commissioning activities

8. Protection and restoration of all wetlands and disturbed areas.

9. Obtain all necessary permits for construction of this facility.

1.03 WORK BY OTHERS:

A. The following work will be performed by Others after the Work of this Contract:

    1. Not Used.

B. The following work will be performed by others concurrently with the Work of this Contract.

    1. Construction of the new West Parish (WPF) Water Treatment Plant
    2. Connection to 60-inch steel pipeline
    3. 3. Slope stabilization of hydro power plant access road

C. Refer to Article 7 of the General Conditions for additional requirements.

1.04 WORK SEQUENCE:

A. The Contractor shall submit a Work Plan to define the work schedule including a clear sequence to complete the work.

B. The proposed sequence shall be in accordance with the requirements for the approved schedule submitted by the Contractor.

1.05 CONTRACTOR'S USE OF PREMISES:

A. Contractor shall limit the use of the premises for the performance of the Work and storage of materials and equipment to allow for the Owner's use in operating and maintaining the downstream facilities and existing WPF WTP facilities and to comply with all requirements outlined in the Order of Conditions (Refer to Appendix B).

B. Contractor shall adhere to permitting restrictions in the use of the premises, and work within limits of sediment and erosion control and as outlined in the Westfield Conservation Commission Notice of Intent, MassDEP Water Quality Certificate, and Construction Stormwater General Permit, as applicable.

C. Contractor shall coordinate with Owner necessary access for normal maintenance requirements.

D. Access to the site shall be via Gate 3 only as shown on Drawing G-005.

E. Contractor shall provide transportation for the Engineer and Resident Engineer to access the pipeline.

F. Contractor shall assume full responsibility for security of all his and his subcontractors' materials and equipment stored on the site.

G. If directed by the Owner, Contractor shall move any stored items which interfere with operations of Owner.

H. Obtain and pay for use of additional storage or work areas if needed to perform the Work.

1.06 CURRENT STATUS OF RWC PIPELINE and EDV CHAMBER:

A. The Contractor's work along the pipeline between the Inlet Works and Pipe Segment No. 2-36 cannot start until after January 1, 2025, as shown on Drawing 00 C-002.

B. The RWC pipeline and EDV Chamber is currently out of service and has been decommissioned and dewatered since September 2019.

C. Pockets of standing water may be present at some low spots along the pipeline and within the existing valve chamber/ building.

END OF SECTION

SECTION 01045

CUTTING, CORING AND PATCHING

PART 1 - GENERAL

1.01 DESCRIPTION:

A. This Section covers the cutting, coring, rough and finish patching of holes and openings in existing and new construction.

B. All cutting, coring, and rough patching shall be performed by the Contractor. Finish patching shall be the responsibility of the Contractor and shall be performed by the trade associated with the application of the particular finish.

1.02 ALTERATIONS, CUTTING, AND PROTECTION:

A. Survey and record condition of existing facilities to remain in-place that may be affected by alteration operations. After alteration work is complete, survey conditions again and restore existing facilities to pre-alteration condition.

B. Perform Work of moving, removal, cutting, and patching with trades qualified to perform Work in manner causing least damage to each type of Work.

C. Provide shoring, needling, and bracing to keep structures structurally secure and free of damaging deflection during cutting or coring operations.

1.03 QUALITY ASSURANCE:

A. Comply with the requirements specified in Section 01400.

B. Adhere strictly to the manufacturer’s current printed recommendations regarding temperature at time of application for all work involving epoxy, cement base coating and protective coating.

C. Use only products of the specified Repair Mortar System Manufacturer(s) or equal.

D. Any changes in the specified repair mortar work methods shall be allowed only with the written acceptance of the Engineer.

PART 2 - PRODUCTS

2.01 MATERIALS:

A. Concrete repair mortar shall be a non-shrink, commercial formulation requiring only the addition of water with minimum 28-day compressive strength of 5,000 psi.

B. Provide a non-shrink cementitious repair mortar material as manufactured by:

1. Sika Repair 224 manufactured by Sika Corporation,

2. MasterEmaco S 488CI manufactured by BASF Corporation,

3. Restokrete Underlayment No. F-120 by Sauereisen, Inc.,

4. Or acceptable equivalent product.

C. Materials for finish patching shall be equal to those of adjacent construction.

PART 3 - EXECUTION

3.01 GENERAL:

A. All cutting and coring shall be performed in such a manner as to limit the extent of patching.

B. All holes cut through concrete and masonry walls, slabs or arches shall be core drilled unless otherwise accepted. No structural members shall be cut without acceptance of the Structural Engineer of Record and all such cutting shall be done in a manner directed by the SER. No holes may be drilled in beams or other structural members. All work shall be performed by mechanics skilled in this type of work.

C. Rough patching shall be such as to bring the cut or cored area flush with existing construction unless otherwise shown. Finish patching shall match existing surfaces.

D. Reinforcing steel cut by cutting and coring operations shall be coated with a three-component, solvent free, moisture tolerant, epoxy-modified cementitious product specifically formulated as an anti-corrosion coating; installed in accordance with the manufacturer's printed instructions.

3.02 CUTTING:

A. Inspect existing conditions of Work, including components subject to damage or movement during cutting or patching.

B. Do not cut or notch structural members without specific written acceptance of the Engineer.

C. Cutting shall be performed with a concrete saw and diamond saw blades of proper size.

D. Corners of square or rectangular openings shall be cored. Do not overcut corners of openings. Corners shall be chipped out square, if required, so as not to cause cracking at the corners.

E. Provide for control of slurry generated by sawing operation on both sides of element.

F. When cutting reinforced concrete, the cutting shall be done so as not damage bond between the concrete and reinforcing steel left in structure. Cut shall be made so that steel neither protrudes nor is recessed from face of the cut.

G. Adequate bracing and/or shoring of area to be cut shall be installed prior to start of cutting. Check area during sawing operations for cracking and provide additional bracing as required to prevent a partial release of cut area during sawing operations.

H. Provide equipment of adequate size to remove cut panel.

3.03 CORING:

A. Coring shall be performed with an accepted non-impact rotary tool with diamond core drills. Size of holes shall be suitable for pipe, conduit, sleeve, equipment, or mechanical seals to be installed.

B. Provide protection for existing equipment, utilities and critical areas against water or other damage caused by drilling operation.

C. Slurry or tailings resulting from coring operations shall be removed from the area following drilling.

3.04 PATCHING:

A. Prepare surfaces to receive cementitious repair mortar in accordance with manufacturer's instructions.

B. Mix the cementitious repair mortar material components in accordance with the manufacturer's instructions. Concrete surfaces should be surface saturated dry (SSD) with no standing water prior to mortar application.

C. Work a wet scrub coat of the mortar per the manufacturer's recommendations into the pores and voids in the substrate and over the substrate prior to mortar application by trowel.

D. Apply the cementitious repair mortar using a steel trowel to work the material into the surface. Fill voids from deepest to shallowest areas as the application work proceeds. Strictly follow the manufacturer's application requirements.

E. Once the repair areas are filled with repair mortar, strike off the mortar level with the surrounding concrete substrate. Do not leave a broom finish. Finish with a steel trowel until closed up at the surface and flat.

F. Cure the repair mortar in strict accordance with the manufacturer's instructions.

3.05 CLEANING:

A. Perform periodic and final cleaning as specified in Section 01740, and:

1. Clean Owner-occupied areas daily.

2. Clean spillage, overspray, and heavy collection of dust in Owner-occupied areas immediately.

B. At completion of alterations work in each area, provide final cleaning and return space to condition suitable for use by Owner.

C. Remove debris from site each day. Removed material, except that listed or marked by Engineer for retention, becomes property of Contractor.

3.06 CLOSEOUT ACTIVITIES:

A. Provide in accordance with Section 01700.

END OF SECTION

SECTION 01046

CONTROL OF WORK

PART 1 - GENERAL

1.01 PLANT AND HOURS OF CONSTRUCTION:

A. Furnish equipment which will be efficient, appropriate, and large enough to secure a satisfactory quality of work and a rate of progress which will ensure the completion of the work within the Contract Time. If at any time such the installation and work appears to the Engineer to be inefficient, inappropriate, or insufficient for securing the quality of work required or for producing the rate of progress aforesaid, he may order the Contractor to increase the efficiency, change the character, or increase the equipment, and the Contractor shall conform to such order. Failure of the Engineer to give such order shall in no way relieve the Contractor of his obligations to secure the quality of the work and rate of progress required.

B. Normal construction activity shall take place only between the hours of 7 a.m. to 3:30 p.m., excluding Saturdays, Sundays, and legal holidays. Work outside the above time periods will be permitted only with the approval of the Owner. Contractor is required to provide two weeks advance notice in writing to the Engineer and Owner for night work and/or extended hours, including anticipated duration of the extended hours.

C. The Owner recognizes the following holidays:

New Year's Day
Martin Luther King Day
Lincoln’s Birthday
Good Friday
Memorial Day
Juneteenth
Independence Day
Labor day
Veteran’s Day
Thanksgiving (Two Days)
Christmas (Two Days)

D. The pipeline repair work is subject to work restrictions due to access road repairs. The Contractor’s work along the pipeline between the Inlet Works and Pipe Segment 2-36 cannot start until after January 1, 2025.

E. Access to the site is restricted to Gate 3 only.

1.02 OCCUPYING PRIVATE LAND:

A. The Contractor shall not (except after written consent from the proper parties) enter or occupy with men, tools, materials, or equipment any land outside the rights of way or property of the Owner. A copy of the written consent shall be given to the Engineer.

1.03 PIPE LOCATIONS:

A. Exterior pipelines will be located substantially as indicated on the Drawings, but the right is reserved to the Owner, acting through the Engineer, to make such modifications in location as may be found desirable to avoid interference with existing structures or for other reasons. Where fittings, etc., are noted on the Drawings, such notation is for the Contractor's convenience and does not relieve him from laying and jointing different or additional items where required.

B. Small interior piping is indicated diagrammatically on the Drawings, and the exact location is to be determined in the field. Piping shall be arranged in a neat, compact, and workmanlike manner, with a minimum of crossing and interlacing, so as not to interfere with equipment or access ways, and, in general, without diagonal runs.

1.04 DIMENSION OF EXISTING STRUCTURES

A. Where the dimensions and locations of existing structures are of importance in the installation or connection of any part of the Work, the Contractor shall verify such dimensions and locations in the field before the fabrication of any material or equipment which is dependent on the correctness of such information.

1.05 OPEN EXCAVATIONS:

A. All open excavations shall be adequately safeguarded by providing temporary barricades, plates, fencing, caution signs, lights, and other means to prevent accidents to persons, vehicles and damage to property. The Contractor shall, at his own expense, provide suitable and safe bridges and other crossings for accommodating travel by pedestrians and workmen. Bridges provided for access during construction shall be removed when no longer required. The length or size of excavation will be controlled by the particular surrounding conditions, but shall always be confined to the limits prescribed by the Engineer. If the excavation becomes a hazard, or if it excessively restricts traffic at any point, the Engineer may require special construction procedures such as limiting the length of the open trench, prohibiting stacking excavated material in the street, and requiring that the trench shall not remain open overnight.

B. The Contractor shall take precautions to prevent injury to the public and workmen due to open trenches. All trenches, excavated material, equipment, or other obstacles which could be dangerous to the public or workmen shall be well lighted as necessary.

C. All open excavations left open at the end of the work day should be barricaded to prevent vvehicles or persons from entering the excavation.

D. Any open excavations left open at the end of the work day that has active vehicle traffic shall be covered with steel plates at the end of each work day.

1.06 TEST PITS:

A. Test pits for the purpose of locating underground pipeline or structures in advance of the construction shall be excavated and backfilled by the Contractor at the direction of the Engineer. Test pits shall be backfilled immediately after their purpose has been satisfied and the surface restored and maintained in a manner satisfactory to the Engineer.

1.07 INTERFERENCE WITH AND PROTECTION OF STREETS:

A. The Contractor shall not close or obstruct any portion of a street, road, or private way without obtaining permits from the proper authorities. If any street, road or private way shall be rendered unsafe by the Contractor's operations, he shall make such repairs or provide such temporary ways or guards as shall be acceptable to the proper authorities.

B. Streets, roads, private ways, and walks not closed shall be maintained passable and safe by the Contractor, who shall assume and have full responsibility for the adequacy and safety of provisions made therefor.

C. The Contractor shall, at least 24 hours in advance, notify the Police and Fire Departments in writing, with a copy to the Engineer, if the closure of a street or road is necessary. He shall cooperate with the Police Department in the establishment of alternate routes and shall provide adequate detour signs, plainly marked and well lighted, in order to minimize confusion.

D. The Contractor shall provide seven days (calendar days) notification to the Engineer of any activities that will limit access to the hydropower/ surge tank access road.

E. The Contractor shall place traffic control devices, warning signs, and personnel, as appropriate to protect personnel and pedestrians during activities that limit use of access roads.

F. The Contractor shall be aware of other work conducted on the site that requires access by other construction vehicles through the gates. All construction vehicles shall maintain a speed of less than 20 mph when entering/ exiting the access gates and on all access roads.

1.08 CARE AND PROTECTION OF PROPERTY:

A. The Contractor shall be responsible for the preservation of all public and private property, and shall use every precaution necessary to prevent damage thereto. If any direct or indirect damage is done to public or private property by or on account of any act, omission, neglect, or misconduct in the execution of the work on the part of the Contractor, such property shall be restored by the Contractor, at his expense, to a condition similar or equal to that existing before the damage was done, or he shall make good the damage in other manner acceptable to the Engineer.

B. All staging and refueling activities shall be limited to those allowable areas identified on the drawings.

C. All construction operations and activities (including site access) shall be conducted within the limit of work as defined in the Westfield Conservation Commission Order of Conditions and the MassDEP Water Quality Certificate and as shown on the drawings.

1.09 PROTECTION AND RELOCATION OF EXISTING STRUCTURES AND UTILITIES:

A. The Contractor shall assume full responsibility for the protection of all buildings, structures, and utilities, public or private, including poles, signs, services to buildings, utilities in the street, gas pipes, water pipes, hydrants, sewers, drains, and electric and telephone cables, whether or not they are shown on the Drawings. The Contractor shall carefully support and protect all such structures and utilities from injury of any kind. Any damage resulting from the Contractor's operations shall be repaired by him at his expense.

B. The Engineer will provide assistance to the Contractor in determining the location of existing services. The Contractor, however, shall bear full responsibility for obtaining all locations of underground structures and utilities (including existing water services, drain lines, and sewers). Services to buildings shall be maintained, and all costs or charges resulting from damage thereto shall be paid by the Contractor.

C. Protection and temporary removal and replacement of existing utilities and structures as described in this Section shall be a part of the work under the Contract and all costs in connection therewith shall be included in the Total Price Bid in the Bid Form.

D. If, in the opinion of the Engineer, permanent relocation of a utility owned by the Commission is required, he may direct the Contractor, in writing, to perform the work. Work so ordered will be paid at the Contract unit prices, if applicable, or as extra work under Article 11 of the Supplementary Conditions. If relocation of a privately owned utility is required, the Commission will notify the Utility to perform the work as expeditiously as possible. The Contractor shall fully cooperate with the Commission and Utility, and shall have no claim for delay due to such relocation. The Contractor shall notify all utility companies in writing at least 72 hours (excluding Saturdays, Sundays, and Legal holidays) before excavating in any public way. Contractor shall also notify

Massachusetts Dig Safe, telephone number (508-333-8008) at least 72 hours prior to start of work.

E. The Contractor shall coordinate the removal and replacement of traffic loops and signals, if required for the performance of the work, at no additional cost to the Owner.

1.10 INSPECTION OF WORK AWAY FROM THE SITE:

A. If work to be done away from the construction site is to be inspected on behalf of the Owner during its fabrication, manufacture, or testing, or before shipment, the Contractor shall give notice to the Engineer of the place and time where such fabrication, manufacture, testing, or shipping is to be done. Such notice shall be in writing and delivered to the Engineer within a minimum of two weeks (14 calendar days), so that the necessary arrangements for the inspection can be made.

1.11 COOPERATION WITHIN THIS CONTRACT:

A. All firms or persons authorized to perform any work under this Contract shall cooperate with General Contractor and his Subcontractors or trades, and shall assist in incorporating the work of other trades where necessary or required.

B. Cutting and patching, drilling and fitting shall be carried out where required by the trade or subcontractor having jurisdiction, unless otherwise indicated herein or directed by the Engineer.

1.12 CLEANUP AND DISPOSAL OF EXCESS MATERIAL:

A. During the course of the work, the Contractor shall keep the site of his operations in as clean and as neat a condition as is possible. He shall dispose of all residue resulting from the construction work and, at the conclusion of the work, he shall remove and haul away any surplus excavation, broken pavement, lumber, equipment, temporary structures, and any other refuse remaining from the construction operations, and shall leave the entire site of the work in a neat and orderly condition.

B. In order to prevent environmental pollution arising from the construction activities related to the performance of this Contract, the Contractor and his subcontractors shall comply with all applicable Federal, State, and local laws, and regulations concerning waste material disposal, as well as the specific requirements stated in this Section and Section 01110.

C. The Contractor is advised that the disposal of excess excavated material in wetlands, stream corridors, and plains is strictly prohibited even if the permission of the property owner is obtained. Any violation of this restriction by the Contractor or any person employed by him, will be brought to the immediate attention of the responsible regulatory

agencies, with a request that appropriate action be taken against the offending parties. Therefore, the Contractor will be required to remove the fill at his own expense and restore the area impacted.

END OF SECTION

SECTION 01063

MISCELLANEOUS REQUIREMENTS

PART 1 - GENERAL

1.01 SCOPE OF WORK:

A. The Contractor shall conform to all miscellaneous requirements as herein specified.

1.02 SIGNAGE

A. In addition to the signage required in 01068 Federal Requirements, the Contractor shall construct and erect at the work site, and in a location designated by the Owner, a sign conforming to the requirements of the Westfield Conservation Commission not less than two square feet or more than three square feet in size bearing the words, “Massachusetts Department of Environmental Protection File Number 333-0836” (see the attached Order of Conditions from the City of Westfield Conservation Commission).

1.03 TRAFFIC CONTROL:

A. The Contractor shall maintain open access to the access roadway to the hydropower/ surge tank area.

B. The access road traffic is limited/ controlled via gates access and very few vehicles are expected.

C. The Contractor shall provide seven days (calendar days) notification to the Engineer of any activities that will limit access to the hydropower/ surge tank access road.

D. The Contractor shall limit closure of the access roadway to 48 hours maximum unless specific permission is granted by the Owner.

1.04 INTERFERENCE WITH EXISTING WORKS:

A. The Contractor shall at all times conduct his operations so as to interfere as little as possible with existing works. The Contractor shall develop a program, in cooperation with the Engineer and interested officials, which shall provide for the access through/ around other on-going projects and operations in the most orderly manner possible. This program shall be adhered to except as deviations therefrom are expressly permitted.

B. The Contractor shall have no claim for additional compensation by reason of delay or inconvenience in adapting his operations to meet the above requirements.

C. All staging and refueling activities shall be limited to those allowable areas identified on the drawings.

D. All construction operations and activities (including site access) shall be conducted within the limit of work as defined in the Westfield Conservation Commission Order of Conditions and the MassDEP Water Quality Certificate and as shown on the drawings.

1.05 MAINTAINING FLOWS:

A. The Contractor shall at his own cost, provide for the flow of culverts and water courses interrupted during the progress of the work, and shall immediately cart away and removal all offensive matter. The entire procedure of maintaining existing flow shall be fully discussed with the Engineer well in advance of the interruption of any flow.

B. Refer to Specification Section 02140 – Dewatering.

1.06 PRELOADING AND LEAKAGE TESTING OF TANKS:

A. No backfilling, floor finish, concrete or mortar fill, wall insulation, gasproofing or protective coatings, or permanent pipe connections shall be applied to or installed in any new water containment structures until they have been subjected to loading for settlement and tested for leakage. Testing shall not be done until the concrete has reached its 28 day design strength.

B. During the test period, the excavation around the structure shall be kept dewatered by the Contractor. The Contractor shall temporarily close all bottom openings and wall openings below maximum water level in the structures; furnish and fill the structures to the design maximum water level with clean water and let it stand for 24-hours before testing. The Contractor shall make his own arrangements for handling the water for testing and its transfer from one structure to another and its final disposal. After 24-hours the Contractor shall take all necessary elevations and measurements prior to testing of the structures.

C. For the Preloading Test, the Contractor shall maintain the liquid level in the structures at the design maximum water level for 72-hours. If the characteristics of settlement of the structure so require, the loading shall continue for a longer period to permit the necessary consolidation of the foundation material, in which case the Contractor shall be entitled to no extra compensation, but a commensurate extension of time for completion of the whole work under this contract shall be allowed.

D. Leakage testing shall not be started until all tank walls, floors and top slabs have been placed and the concrete has attained design strength.

E. Leakage testing shall be carried out in accordance with ACI 350.1 - Tightness Testing of Environmental Engineering Concrete Structures. The test criterion shall be HST-NML (no measurable loss) as defined by ACI 350.1.

F. During the leakage test period, the Engineer shall inspect the structure for leakage. If moist spots become visible, indicating the existence of minor leaks, or if the water level indicates hidden leakage, the Contractor shall furnish all materials and do all work necessary to locate the leaks and make the structure watertight to the complete satisfaction of the Engineer. This includes the repair of cracks, tie holes, etc. No additional compensation shall be allowed for such work.

G. If, in the opinion of the Engineer, during the course of the test weather conditions are such that it becomes difficult to accurately monitor the water level in the tank, the test shall be stopped, and started over again when weather permits.

H. On conclusion of the test, the Contractor shall pump or drain the water from the structure and dispose of it without injury to structures or surfaces.

1.07 BACKFILLING AGAINST STRUCTURES:

A. Backfill shall not be placed against foundation walls until all interior floors have been placed and the concrete has attained design strength. This includes the floor level at grade or the next level above grade if no floor is within 2 feet of finished grade.

B. Backfill shall not be placed against cantilever walls until the concrete has attained design strength.

1.08 HYDRAULIC UPLIFT OF STRUCTURES AND PIPES:

A. The Contractor shall be responsible for the protection of all structures and pipes against hydraulic uplift until such structures and pipes have been accepted finally by the Owner.

B. In this regard, the Contractor is advised that all tanks, manways, and pipes when completed are designed to resist hydraulic uplift from groundwater up to the elevation indicated on the structural drawings when the structure is completed. The concrete slab bottoms, concrete manway bottoms and pipe bedding shall be placed in the dry and in dry conditions, with the use of wellpoints or other dewatering means to keep the water elevation sufficiently low to continue the work.

C. Buildings with basements are designed to resist hydraulic uplift from groundwater up to the elevation indicated on the structural drawings against the weight of the completed structure, including all masonry, structural steel frames and cladding.

1.09 PRECAUTIONS AGAINST HYDROSTATIC UPLIFT DURING CONSTRUCTION:

A. The Contractor shall maintain a low groundwater elevation in the vicinity of the structures and pipes until they are complete. In case of extremely high water during construction of the structures, it may be necessary to flood the structures to maintain stable conditions.

1.10 SAFETY PRECAUTIONS:

A. Prior to commencing work, the Contractor is required to submit a Site-Specific Health and Safety Plan (HASP) and specific Task Hazard Analyses for the work to be completed. Refer to Section 01120.

B. The Work of this Contract occurs within a permit required confined space. The majority of the internal repairs specified in this Contract occurs within a permit required confined space. Refer to Section 01120 for Confined Space Entry Safety Plan Requirements.

C. The Contractor shall implement all health and safety protocols and measures as required by OSHA regulations. In addition, the Owner requires these health and safety plans to be devised in a manner to protect the Owner's and Engineer's staff. These documents shall include at a minimum and not limited to, confined space entry, planned fall protection measures, and trenching and excavation protection.

D. The Contractor shall provide on-site technical rescue services during Confined Space Entry activities due to insufficient local resources. These technical rescue services shall be made available to the Engineer when performing inspections of internal repairs.

E. The Contractor shall be responsible for all costs associated with confined space entries, including the need for technical rescue services required to complete the Work.

F. Contractor shall wear proper personal protective equipment (PPE) as specified in the Contractor's Site-Specific Health and Safety Plan (HASP), as outlined in the Work Plan by the Contractor.

1.11 BURIED UTILITY WARNING AND IDENTIFICATION TAPE:

A. Provide detectable aluminum foil plastic backed tape or detectable magnetic plastic tape manufactured specifically for warning and identification of buried piping. Tape shall be detectable by an electronic detection instrument. Provide tape in rolls, 3 inches minimum width, color coded for the utility involved with warning and identification imprinted in

bold black letters continuously and repeatedly over entire tape length. Warning and identification shall be CAUTION BURIED WATER PIPING BELOW or similar. Use permanent code and letter coloring unaffected by moisture and other substances contained in trench backfill material. Bury tape with the printed side up at a depth of 12 inches below the top surface of earth or the top surface of the subgrade under pavements.

1.12 PROTECTION AGAINST ELECTROLYSIS:

A. Where dissimilar metals are used in conjunction with each other, suitable insulation shall be provided between adjoining surfaces so as to eliminate direct contact and any resultant electrolysis. The insulation shall be bituminous impregnated felt, heavy bituminous coatings, nonmetallic separators or washers, or other acceptable materials.

END OF SECTION

SECTION 01065

STRUCTURAL TESTS AND INSPECTIONS

PART 1 - GENERAL

1.01 GENERAL:

A. The Structural Engineer of Record (SER) is required to prepare a program describing the structural tests and inspections that will be performed for this project. The SER is the structural engineer (an individual) who is in responsible charge of the preparation of the structural drawings and structural specifications for this project and whose professional engineering seal appears on said structural drawings. The parties responsible for the performance of the structural tests and inspections are noted on the Program of Structural Tests and Inspections prepared by the SER.

B. The SER has prepared a Program of Structural Tests and Inspections (the "Program"), which has been or will be submitted to the building official who has jurisdiction over this project. A copy of this program is included in this specification as Attachment No 1 for reference.

C. The Program shall not relieve the Contractor or its subcontractors of their responsibilities and obligations for quality control of the Work, their other obligations for supervising the work, for any design work, which is included in their scope of services, and for full compliance with the requirements of the Contract Documents. The detection of, or failure to detect, deficiencies or defects in the Work during the testing and inspection conducted pursuant to the Program shall not relieve the Contractor or its subcontractors of their responsibility to correct all deficiencies or defects, whether detected or undetected, in all parts of the Work, and to otherwise comply with all requirements of the Contract Documents. Further, while the SER, and the Resident Engineer shall perform certain tasks in the Program requiring the review of certain construction activities, the SER and Resident Engineer shall only perform such tasks to ensure compliance with the SER approved submittals and the specifications. Neither the SER nor the Resident Engineer shall assume any responsibility or liability for the means, methods, procedures, or techniques used by any construction contractor.

D. The program of structural tests and inspection does not apply to the Contractor's equipment, temporary structures used by the Contractor to construct the project, the Contractor's means, methods, and procedures, and job site safety.

1.02 CONTRACTOR'S RESPONSIBILITIES:

A. Where the Program of Structural Tests and Inspections indicates that a structural component or system is subject to structural tests and inspections and that the SER for the project has not been retained to design said component or system or to prepare a

performance specification for said component of system, the Contractor shall retain, or require others under his aegis to retain, a professional engineer registered in the jurisdiction where the project is located to design said component or system and to provide the required program of structural tests and inspections for said component or system.

B. The Contractor shall provide free and safe access to the Work for the SER and all other individuals who are observing the Work or performing structural tests or inspections. The Contractor shall provide all ladders, scaffolding, staging, and up-to-date safety equipment, all in good and safe working order, and qualified personnel to handle and erect them, as may be required for safe access.

1.03 CONTRACTOR FURNISHED TESTING LABORATORY SERVICES:

A. An independent commercial testing laboratory acceptable to the Engineer shall perform all tests that require the services of a laboratory to determine compliance with the Contract Documents. The laboratory shall be staffed with experienced technicians, properly equipped, and fully qualified to perform the tests in accordance with the specified standards.

B. Preliminary Testing Services: The Contractor shall be responsible for all testing laboratory services in connection with concrete materials and mix designs, the design of asphalt mixtures, gradation tests for structural and embankment fills, backfill materials, and all other tests and engineering data required for the Engineer's review of materials and equipment proposed to be used in the Work. The Contractor shall obtain the Engineer 's acceptance of the testing laboratory before having services performed and shall pay all costs for services.

C. The Contractor shall not retain any testing laboratory against which the Owner or the Engineer have reasonable objection, and if at any time during the construction process the services become unacceptable to the Owner, or the Engineer, either the Owner or the Engineer may direct in writing that such services be terminated. The request must be supported with evidence of improper testing or unreasonable delay. If the Engineer determines that sufficient cause exists, the Contractor shall terminate the services and engage a different testing laboratory.

D. Transmittal of Test Reports: Written reports of testing and engineering data furnished by the Contractor for the Engineer's review of materials and equipment proposed to be used in the Work shall be submitted as specified for Shop Drawings.

E. The Contractor’s testing laboratory shall furnish four copies of a written report of each test performed by laboratory personnel within three days after each test is completed. Distribution shall be two copies of each test report to the Engineer's Representative, one copy to the Owner, and one copy for the Contractor.

1.04 OWNER FURNISHED TESTING AND INSPECTION SERVICES:

A. The Owner will employ the services of an independent testing agency to conduct the Program of Structural Tests and Inspections as described in Section 01065 and perform all quality control tests of materials of construction in the field or in the laboratory during and after their incorporation in the Work. Field sampling and testing shall be performed in the general manner indicated in the specifications, with minimum interference with construction operations.

B. The Contractor shall furnish a construction schedule and a minimum of 48 hour notice of readiness for testing and inspection of the work. The Engineer shall determine the exact time and location of field sampling and testing and may require such additional sampling and testing as necessary to determine that materials and equipment conform with data previously furnished by Contractor and to the Contract Documents.

C. The Contractor shall schedule the work to permit adequate time for testing and re-testing should test results not conform to the contract documents. Lack of testing or inspection which is attributable to insufficient notice by the Contractor or failure of the Contractor to cooperate, will be cause for rejection of the work.

D. The Contractor shall deliver materials in sufficient quantities to the Owner's testing agency as may be required. Laboratory testing shall be performed within a reasonable time, consistent with the specified standards.

E. The Contractor shall furnish material samples and cooperate in the field sampling and testing activities, interrupting the work when necessary. The Contractor shall furnish personnel, facilities, and access to assist in the sampling and testing activities.

PART 2 - PRODUCTS

(Not Used)

PART 3 - EXECUTION

(Not Used)

ATTACHMENT NO. 1
PROGRAM OF STRUCTURAL TESTS AND INSPECTIONS

Project: 42-Inch Raw Water Bypass Conveyance Rehabilitation and Energy Dissipation and Equalization Facility

Location: 1515 Granville Road Westfield Ma, 01805

Owner: Springfield Water and Sewer Commission

Owner's Address: 1515 Granville Road Westfield, MA 01805

Architect of Record: Chen Li, RA

Structural Engineer of Record (SER): Michael E. Malenfant, PE

This program of structural tests and inspections is submitted as a condition for issuance of the building permit in accordance with the International Building Code.

The following firms, agencies, or individuals (hereinafter referred to collectively as agents) will perform the tests and inspections under the direction of the SER:

Abbreviation	Agent
SER	Structural Engineer Of Record Listed Above
RES	The Resident Representative
ITA(C)	Independent Testing Agency Employed By Contractor
ITA	Independent Testing Agency Employed By Owner
RPE(C)	Registered Professional Engineer Employed By Contractor
GEO	The Project Geotechnical Engineer
IWI	Independent Welding Inspector

The above abbreviations will be used on the attached pages to identify which agent is performing the particular tests or inspections.

The following categories of structural tests and inspections, if checked, are included in the program for structural tests and inspections for this project. The specific tests and inspections required for each checked category are listed on the page noted opposite the category and further described in the various technical specification sections.

	Category	Page		Category	Page
☐	**Steel Construction**		☒	**Controlled Structural Fill**	**9**
☒	**Cast-in-Place Concrete**	**6**	☐	**Pile Foundations**	
☐	**Precast Concrete Construction**	**7**	☐	**Pier Foundations**	
☐	**Masonry Construction**		☒	**Aluminum Construction**	**10**
☒	**In-situ Bearing Strata**	**9**	☒	**Special Cases**	**10**

The following items of construction, if checked, are specified in the structural plans or specifications on a performance basis. The structural design of these items will be performed by the RPEC and reviewed by the SER. The construction of these items is included in the program for tests and inspections on the attached sheets.

	Category		Category
☐	**Curtain Walls**	☐	**Metal Buildings**
☒	**Precast Concrete Components**	☒	**Metal Stairs**
☐	**Post-Tensioning Steel**	☒	**Metal Railings**
☐	**Structural Steel Connections**	☐	**Metal and Composite Gratings**
☒	**Structural Aluminum Connections**	☐	**Metal Plate Covers**

The following items are excluded from this program of structural tests and inspections since other structural engineers not under the aegis of the SER designed them and the SER has no duties or responsibilities with respect to such performance specifications or designs. The Owner shall assign other architects, or construction contractors, as applicable; to be special SER's for their respective designs and such architects and/or contractors shall be responsible for all such structural tests and inspections for their respective designs.

- Seismic design of mechanical or electrical components, systems, and their anchorage to the structure.
- Excavation support systems.
- Temporary bracing, temporary platforms, scaffolding, temporary guards, and railings.
- Anything related to jobsite safety or construction means and methods.

Structural Engineer of Record:

Name:

Signature:_____
Firm: AECOM
Date: _____

Registration Seal

CAST-IN-PLACE CONCRETE CONSTRUCTION

Item	Agent	Scope	Frequency
1. Mix Design	ITA(C)	Design Concrete Mixes	Each mix
2. Materials Certification	SER	Review mix designs.	Each mix
	SER	Review for conformance to specifications.	Each product
3. Batching Plant	ITA/SER	Review to ensure that Plant quality control procedures have been adopted.	Start of project
4. Reinforcement Installation	RES	Inspect reinforcing for size, quantity, condition, and placement.	Prior to each placement
5. Formwork Geometry	RES	Inspect form sizes for compliance with specifications.	Prior to each placement
6. Concrete Placement	RES	Review for conformance with specifications.	Each placement
	ITA	Perform slump, density, and air content tests at point of discharge.	Each truck
7. Curing and Protection	ITA/RES	Observe procedures for conformance to the specifications.	Each placement
8. Evaluation of Concrete Strength	ITA	Test and evaluate in accordance with the specifications.	Every 50 cubic yards or part thereof
Note: The Contractor may elect to have the Contractor's independent testing agency (ITA(C)) perform additional tests in addition to the testing by the Owner's Independent Testing Agency (ITA) at no cost to the Owner.			

PRECAST CONCRETE CONSTRUCTION

Item	Agent	Scope	Frequency
1. Plant Certification/Quality Control Procedures	SER/ ITA	Review to ensure that Plant quality control procedures have been adopted (SER). Inspect plant storage and handling procedures (ITA). Confirm that approved submittals are being used for fabrication; review welder's certifications (SER). Monitor finished product for structural defects (cracks) (ITA).	Start of project
2. Material Certification	SER	Review for conformance to ACI 318.	Each product
3. Formwork Geometry	ITA	Inspect form sizes.	Selected placements
4. Reinforcement Installation	ITA	Inspect reinforcing and prestressing strands for size, quantity, condition, and placement for conformance with Contract Documents, SER approved submittals, and ACI 318. Inspect welding.	Selected placements
5. Mix Design	ITA(C)	Design Concrete Mixes	Each mix
	SER	Review for conformance with specifications (SER).	Each mix
6. Concrete Placement	RES/ ITA	Inspect concrete placement procedures for conformance to ACI 318, Sections 5.9 and 5.10 (ITA), and for conformance with specifications (RES).	Selected placements
7. Curing and Protection	RES/ ITA	Inspect for maintenance of specified curing temperatures and techniques per ACI 318 (ITA), and for conformance with specifications (RES).	Each placement
8. Evaluation of Concrete Strength	ITA	Test for conformance to specifications in accordance with ACI 318.	Every 50 cubic yards or part thereof

Item	Agent	Scope	Frequency
9. Prestress Operation	ITA	Inspect application of prestressing forces per ACI 318. Inspect grouting of bonded, post-tensioned, prestressing tendons.	Selected placements
10. Assembled/Erected Precast Elements.	RES	Inspect for compliance with SER approved submittals and specifications. Review site storage and handling procedures for consistency with design of precast elements. Verify that SER approved erection drawings are on site and are being used for erection. Verify that SER approved erection procedures are being followed. Review welder's certifications.	Each unit
11. Connections/ Embedded Items	ITA	Inspect interface connections including end and edge doweling. Inspect embedment for proper location. Inspect shimming, bearing, bolting, and welding of connections.	Each unit

IN-SITU BEARING STRATA FOR FOUNDATIONS

Item	Agent	Scope	Frequency
1. Bearing strata for foundations	GEO/ RES	Review strata for conformance to the structural drawings, specifications, and/or geotechnical report.	Prior to foundation placement
2. Bearing surfaces of foundations	GEO/ RES	Review for conformance to the requirements of the structural drawings, specifications, and/or geotechnical report.	Prior to foundation placement

CONTROLLED STRUCTURAL FILL (PREPARED FILL)

Item	Agent	Scope	Frequency
1. Fill Material	ITA	Test material for conformance to specifications or geotechnical report. Perform laboratory compaction tests in accordance with the specifications to determine optimum water content and maximum dry density.	Each Material
2. Installation of Controlled Structural Fill	RES/ ITA	Provide review of the installation, in accordance with the specifications. Verify maximum lift placement thickness (ITA).	Each lift
3. Density of Fill	ITA	Perform field density tests of the in-place fill in accordance with the specifications.	Each lift
NOTE: Above testing is confirmatory testing by the Owner's independent testing agency (ITA). These tests are <u>in addition</u> to the testing required by the Contractor's independent testing agency (ITA(C)).			

ALUMINUM CONSTRUCTION

Item	Agent	Scope	Frequency
1. Fabricator Certification/ Quality Control Procedures.	SER	Review to ensure that quality control procedures have been adopted for each Fabricator.	Start of project
2. Fabricator Inspection	SER	Review to ensure that an Independent Inspection Agency has approved each Fabricator.	Start of project
3. Material Certification	SER	Review for conformance to the specifications.	Each product
4. Bolting	ITA	Test and inspect bolted connections in accordance with specifications. Verify bolt size and grade in accordance with AISC specifications A325/A490.	Periodic
5. Welding	IWI	Check welder qualifications. Verify filler material in accordance with AWS D1.1. Visually inspect fillet welds. Test complete and partial penetration groove welds full length by dye penetrant, ultrasonic, or radiographic testing in accordance with the contract documents.	Periodic
6. Structural Framing, Details and Assemblies	RES	Review for conformance with specifications and shop drawings.	Periodic

SPECIAL CASES

Item	Agent	Scope	Frequency
1. Tank Leakage Testing	RES	Witness testing in accordance with contract documents.	Each tank
2. Concrete Anchor Installation	RES	Verify diameters, depth and cleaning of holes conforms to manufacturer's instructions.	Each anchor

END OF SECTION

SECTION 01068

FEDERAL REQUIREMENTS

1.0 REGULATIONS FOR FEDERAL GRANT PROJECTS

This contract is subject to the requirements and regulations governing projects receiving Federal Grants. These include the following:

A. Representatives of the U. S. Environmental Protection Agency, the State, and of the Westfield Conservation Commission shall have access to the Work wherever it is in preparation or progress and the Contractor shall provide proper facilities for such access and inspection.

B. Whenever a material, article or piece of equipment is identified on the drawings or in the specifications by reference to brand name or catalog number, it shall be understood that this is referenced for the purpose of defining the performance or other salient requirements and that other products of equal capacities, quality and function shall be considered. The Contractor may recommend the substitution of a material, article, or piece of equipment of equal substance and function for those referred to in the Contract Documents by reference to brand name or catalog number, and if, in the opinion of the Engineer, such material, article or piece of equipment is of equal substance and function to that specified, the Engineer may permit its substitution and use by the Contractor. Any cost differential shall be deductible from the contract price and the Contract Documents shall be appropriately modified by a change order. The Contractor warrants that if substitutes are permitted, no major changes in the function or general design of the project will result. Incidental changes or extra component parts required to accommodate the substitute shall be made by the Contractor without a change in the contract price or contract time for completion.

C. The Contractor and all subcontractors shall comply with the provisions contained in "Labor Standards Provisions for Federally Assisted Construction Contracts" (May 1973), a copy of which follows.

D. This project is subject to all of the Safety and Health Regulations (CFR 29 Part 1926 and all subsequent amendments) as promulgated by the U.S. Department of Labor on June 24, 1974. Contractors are urged to become familiar with the requirements of these regulations.

2.0 PROJECT SIGN

The Contractor shall construct and erect at the work site, and in a location designated by the Owner, a sign conforming to the requirements of the U.S. Environmental Protection Agency. The sign shall be erected in a prominent place and, if possible, shall be visible from a well-traveled road. A sample drawing of the sign is included at the end of this section. The Contractor shall obtain from the Owner the wording for the project name,

number, and dollar amounts, to be included in the sign for this particular project. The Contractor shall maintain the project sign throughout the duration of the contract. The Contractor shall submit a mockup of the sign to the Engineer for approval.

The Contractor shall construct and erect at the work site, and in a location designated by the Owner, a sign conforming to the requirements of the U.S. Environmental Protection Agency Water Infrastructure Finance Authority, and the Mass DEP. A sample drawing of the sign is included at the end of this section. The Contractor shall obtain from the Owner the wording for the project name, number, and dollar amounts, to be included in the sign for this particular project. The Contractor shall maintain the project sign throughout the duration of the contract. The Contractor shall submit a mockup of the sign to the Engineer for approval.

3.0 MINIMUM WAGE RATES

A Federal Wage Determination issued by the U.S. Department of Labor will be incorporated in these specifications by addendum prior to the receipt of bids.

Federal Wage Determination Modification No. 2, dated February 9, 2024, issued by the U.S. Department of Labor is included at the end of this section.

Borrowers name goes here

Financed by the Water Infrastructure Finance Authority of Arizona

Project details:	Single line project name, reference number, etc.
Sponsor:	Borrowers name goes here
Board of Directors:	Use board or council depending on borrower type. it is made to accomodate two
or Town Council:	lines of information.
Engineer:	Engineer name here
Contractor:	Contractor name
Contractor, specific:	if you have specific contracts for specific jobs that
Contractor, Booster Valves:	you'd like to identify, this section will handle up to 4
Contractor, Storage Tank:	lines of contractors

WATER INFRASTRUCTURE FINANCE AUTHORITY OF ARIZONA

EPA United States Environmental Protection Agency

Engineer logo if desired. Center WIFA and EPA logos above the gov and epa admin

State of Arizona
Governor Katie Hobbs

U.S. EPA
Michael Regan, Administrator

END OF SECTION

SECTION 01080

ABBREVIATIONS AND DEFINITIONS

PART 1 - GENERAL

1.01 RELATED SECTIONS:

A. Section 01090: Reference Standards

1.02 ABBREVIATIONS:

A. Where any of the following abbreviations are used in the Contract Documents, they shall have the meaning set forth opposite each. Abbreviations for trade associations and standards organizations are listed in Section 01090.

AASHTO	American Association of State Highway and Transportation Officials
ACI	American Concrete Institute
AFBMA	Anti-Friction Bearing Manufacturers Association
AGA	American Gas Association
AGMA	American Gear Manufacturers Association
AISC	American Institute of Steel Construction
AMCA	Air Moving and Conditioning Association
ANS	American National Standard
ANSI	American National Standards Institute
API	American Petroleum Institute
ASCE	American Society of Civil Engineers
ASHRAE	American Society of Heating, Refrigerating and Air Conditioning Engineers
ASME	American Society of Mechanical Engineers

ASTM	American Society for Testing and Materials
AWG	American or Brown and Sharpe Wire Gage
AWPA	American Wood-Preservers' Association
AWWA	American Water Works Association
CS	Commercial Standard
IBR	Institute of Boiler and Radiator Manufacturers
IEEE	Institute of Electrical and Electronics Engineers, Inc.
Fed. Spec.	Federal Specifications issued by the Federal Supply Service of the General Services Administration, Washington, D.C.
IPS	Iron Pipe Size
JIC	Joint Industry Conference Standards
NBS	National Bureau of Standards
NEC	National Electrical Code; latest edition
NEMA	National Electrical Manufacturers Association
NFPA	National Fire Protection Association
NPT	National Pipe Thread
OS&Y	Outside screw and yoke
SMACNA	Sheet Metal and Air Conditioning Contractors National Association, Inc.
Stl. WG	U. S. Steel Wire, Washburn and Moen, American Steel and Wire or Roebling Gage
UL	Underwriters' Laboratories
USS Gage	United States Standard Gage

WOG	Water, Oil, Gas
WSP	Working steam pressure
125-lb. ANS or 250-lb. ANS	American National Standard for Cast-Iron Pipe Flanges and Flanged Fittings, Designation B16.1-1975, for the appropriate class

1.03 DEFINITIONS:

A. Wherever the words defined in this section or pronouns used in their stead occur in the Contract Documents, they shall have the meanings herein given.

As Directed, as Required, Etc.

Wherever in the Contract Documents, or on the Drawings, the words "as directed," "as ordered," "as requested," "as required," "as permitted," or words of like import are used, it shall be understood that the direction, order, request, requirement, or permission of the Engineer is intended. Similarly, the words "approved," "acceptable," "suitable," "satisfactory," and words of like import shall mean approved by, acceptable to, suitable to, or satisfactory to the Engineer.

Provide

Wherever in the Contract Documents the word "provide" is used, it shall mean to furnish (or supply) and install.

Elevation

The figures given on the Drawings or in the other Contract Documents after the word "elevation" or abbreviation of it shall mean the distance in feet above the datum adopted by the Engineer.

Rock

The word "rock," wherever used as the name of an excavated material or material to be excavated, shall mean only boulders and pieces of concrete or masonry exceeding 1 cu. yd. in volume, or solid ledge rock which, in the opinion of the Engineer, requires, for its removal, drilling and blasting, wedging, sledging, barring, or breaking up with a power-operated tool. No soft or disintegrated rock which can be removed with a hand pick or power-operated excavator or shovel, no loose, shaken, or previously blasted rock or broken stone in rock fillings or elsewhere, and no rock exterior to the maximum limits of measurement allowed, which may fall into the excavation, will be measured or allowed as

"rock."

Earth

The word "earth", wherever used as the name of an excavated material or material to be excavated, shall mean all kinds of material other than rock as above defined.

PART 2 - PRODUCTS (NOT USED)

PART 3 - EXECUTION (NOT USED)

END OF SECTION

SECTION 01090

REFERENCE STANDARDS

PART 1 - GENERAL

1.01 QUALITY ASSURANCE:

A. Should specified reference standards conflict with the Contract Documents, refer to paragraph 3.02 of the General Conditions.

1.02 SCHEDULE OF REFERENCES:

AA Aluminum Association
818 Connecticut Avenue, N.W.
Washington, DC 20006

AABC Associated Air Balance Council
1000 Vermont Avenue, N.W.
Washington, DC 20005

AASHTO American Association of State Highway and Transportation Officials
444 North Capitol Street, N.W.
Washington, DC 20001

ABMA American Bearing Manufacturers Association
1101 Connecticut Avenue, N.W., Suite 700
Washington, DC 20036

ACI American Concrete Institute
Box 19150
Retford Station
Detroit, MI 48219

ACPA American Concrete Pipe Association
5605 N. MacArthur Blvd., Suite 340
Irving, TX 75039

ACPPA American Concrete Pressure Pipe Association
www.acppa.org,
support@acppa.org

ADC	Air Diffusion Council 230 North Michigan Avenue Chicago, IL 60601
AGA	American Gas Association
AGC	Associated General Contractors of America 1957 E Street, N.W. Washington, DC 20006
AI	Asphalt Institute Asphalt Institute Building College Park, MD 20740
AIA	American Institute of Architects 1735 New York Avenue, N.W. Washington, DC 20006
AISC	American Institute of Steel Construction Eighth Floor 400 North Michigan Avenue Chicago, IL 60611
AISI	American Iron and Steel Institute 1000 16th Street, N.W. Washington, DC 20036
AITC	American Institute of Timber Construction 333 W. Hampden Avenue Englewood, CO 80110
AMCA	Air Movement and Control Association 30 West University Drive Arlington Heights, IL 60004
ANSI	American National Standards Institute 1430 Broadway New York, NY 10018
APA	American Plywood Association Box 11700 Tacoma, WA 98411

API	American Petroleum Institute 1220 L. Street, N.W. Washington, DC 2005
ARI	Air-Conditioning and Refrigeration Institute 1501 Wilson Boulevard Arlington, VA 22209
ASCE	American Society of Civil Engineers 1801 Alexander Bell Drive Reston, VA 20191
ASHRAE	American Society of Heating, Refrigeration and Air Conditioning Engineers 1791 Tullie Circle, N.E. Atlanta, GA 30329
ASME	American Society of Mechanical Engineers 345 East 47th Street New York, NY 10017
ASPA	American Sod Producers Association 4415 West Harrison Street Hillside, IL 60162
ASTM	American Society for Testing and Materials 1916 Race Street Philadelphia, PA 19103
AWI	Architectural Woodwork Institute 2310 South Walter Reed Drive Arlington, VA 22206
AWPA	American Wood-Preservers' Association 7735 Old Georgetown Road Bethesda, MD 20014
AWS	American Welding Society 550 LeJeune Road, N.W. Miami, FL 33135
AWWA	American Water Works Association 6666 West Quincy Avenue Denver, CO 80235

BIA	Brick Institute of America 11490 Commerce Park Drive Reston, VA 22091
BOCA	BOCA International Headquarters Office 4051 West Flossmoor Road Country, Club Hills, IL 60478-5795
CDA	Copper Development Association 57th Floor, Chrysler Building 405 Lexington Avenue New York, NY 10174
CLFMI	Chain Link Fence Manufacturers Institute 1101 Connecticut Avenue, N.W. Washington, DC 20036
CRSI	Concrete Reinforcing Steel Institute 933 Plum Grove Road Schaumburg, IL 60195
DHI	Door and Hardware Institute 7711 Old Springhouse Road McLean, VA 22101
EJCDC	Engineers' Joint Contract Documents Committee American Consulting Engineers Council 1015 15th Street, N.W. Washington, DC 20005
EJMA	Expansion Joint Manufacturers Association 25 North Broadway Tarrytown, NY 10591
FGMA	Flat Glass Marketing Association 3310 Harrison White Lakes Professional Building Topeka, KS 66611

FM	Factory Mutual System 1151 Boston-Providence Turnpike P.O. Box 688 Norwood, MA 02062
FS	Federal Specification General Services Administration Specifications and Consumer Information Distribution Section (WRSIS) Washington Navy Yard, Building 197 Washington, DC 20407
GA	Gypsum Association 1603 Orrington Avenue Evanston, IL 60201
JIC	Joint Industrial Council c/o National Machine Tool Builders Association 79-1 Westpark Drive McLean, VA 22102
IBR	Institute of Boiler and Radiator Manufacturers a/k/a Hydronics Institute P.O. Box 218 35 Russo Place Berkeley Heights, NJ 07922
ICBO	International Conference of Building Officials 5360 S. Workman Mill Road Whittier, CA 90601
ICEA	Insulated Cable Engineers Association Box 1568 Carrollton, GA 30112
IEEE	Institute for Electrical and Electronics Engineers 3 Park Ave 17th Floor New York, NY 10016-5997
IMIAC	International Masonry Industry All-Weather Council International Masonry Institute 815 15th Street, N.W. Washington, DC 20005

MBMA	Metal Buildings Manufacturer's Association 1230 Keith Building Cleveland, OH 44115
MEC	Massachusetts Electric Code
MIL	Military Specifications Naval Publications and Forms Center 5801 Tabor Avenue Philadelphia, PA 19120
ML/SFA	Metal Lath/Steel Framing Association 221 North LaSalle Street Chicago, IL 60601
NAAMM	National Association of Architectural Metal Manufacturers 221 North LaSalle Street Chicago, IL 60601
NCMA	National Concrete Masonry Association P.O. Box 781 Hendron, VA 22070
NEBB	National Environmental Balancing Bureau 8224 Old Courthouse Road Vienna, VA 22180
NEC	National Electric Code
NECA	National Electrical Contractors Association 3 Bethesda Metro Center Suite 1100 Bethesda, MD 20814
NEMA	National Electrical Manufacturers' Association 1300 N 17th Street Suite 1847 Rosslyn VA 22209
NETA	International Electrical Testing Association 106 Stone St. P.O. Box 687 Morrison, CO 80465

NFPA	National Fire Protection Association Battery March Park Quincy, MA 02269
NFPA	National Forest Products Association 1619 Massachusetts Avenue, N.W. Washington, DC 20036
NSWMA	National Solid Wastes Management Association 1730 Rhode Island Avenue, N.W. Washington, DC 20036
NTMA	National Woodwork Manufacturers Association 205 W. Touhy Avenue Park Ridge, IL 60068
PCA	Portland Cement Association 5420 Old Orchard Road Skokie, IL 60077
PCI	Prestressed Concrete Institute 201 North Wells Street Chicago, IL 60606
PS	Product Standard U.S. Department of Commerce Washington, DC 20203
RIS	Redwood Inspection Service One Lombard Street San Francisco, CA 94111
RCSHSB	Red Cedar Shingle and Handsplit Shake Bureau 515 116th Avenue Bellevue, WA 98004
SDI	Steel Deck Institute P.O. Box 9506 Canton, OH 44711
SDI	Steel Door Institute 712 Lakewood Center North 14600 Detroit Avenue Cleveland, OH 44107

SIGMA Sealed Insulating Glass Manufacturers Association
111 East Wacker Drive
Chicago, Il 60601

END OF SECTION

SECTION 01110

ENVIRONMENTAL PROTECTION PROCEDURES

PART 1 -- GENERAL

1.01 SCOPE OF WORK:

A. The work covered by this Section consists of furnishing all labor materials and equipment and performing all work required for the prevention of environmental pollution or extraneous environmental impacts in conformance with applicable laws and regulations, during and as the result of construction operations under this Contract. For the purpose of this Specification, environmental pollution is defined as the presence of chemical, physical, or biological elements or agents which adversely affect human health or welfare; unfavorably alter ecological balances of importance to human life; affect other species of importance to humans; or degrade the utility of the environment for aesthetic and/or recreational purposes. Extraneous environmental impacts are defined as impacts (both temporary and permanent) to the surrounding environment beyond the extent described herein and on the project plans.

B. The control of environmental pollution requires consideration of air, water, and land, and involves management of noise and solid waste, as well as other pollutants.

C. Schedule and conduct all work in a manner that will minimize the erosion of soils. Provide erosion control measures such as diversion channels, sedimentation or filtration systems, berms, staked straw bales, seeding, mulching, or other special surface treatments as are required to prevent silting and muddying of streams, rivers, impoundments, lakes, etc. All erosion control measures shall be in place in an area prior to any construction activity in that area. Controls will be utilized to minimize sediment tracking onto swamp mats. Locations requiring erosion and sediment controls are provided in Drawings 10 C-102, C-103, C104, and 00 C-131, 132, 133, 135, 136, and 137. Specific requirements and details for erosion and sedimentation controls are specified on Drawing 99 C-511.

D. Schedule and conduct all work in a manner that will minimize impact to wetlands and other resource areas. Wetlands and waterbodies shall only be traversed or otherwise impacted where described on the project plans, and swamp mats shall be used where indicated on the project plans. In one instance, timber matting shall be used to traverse a 1-foot wide intermittent stream. No material shall be placed directly in the streambed for any length of time.

E. These Specifications are intended to ensure that construction is achieved with a minimum of disturbance to the existing ecological balance between a water resource and its surroundings. These are general guidelines. It is the Contractor's responsibility to determine the specific construction techniques to meet these guidelines.

F. All phases of sedimentation and erosion control shall comply with and be subject to the

approval of the Department of Environmental Protection and the local Conservation Commission.

G. Schedule and conduct all work in a manner that will minimize the level of noise escaping the site, especially at night and on weekends. (Refer to Section 01046 and 02018.)

1.02 APPLICABLE REGULATIONS

A. Comply with all applicable Federal, State, and local laws and regulations concerning environmental pollution control and abatement.

B. The following permits for the permanent work have been obtained by the Owner and are provided in Appendix B:

1. Order of Conditions issued by the Westfield, MA Conservation Commission

2. US Army Corps of Engineers Self-Verification Form under Clean Water Act Section 404 General Permits (GP) for Massachusetts and GP General Conditions.

3. Massachusetts Endangered Species Act (MESA) Review Approval List of Conditions

4. MassDEP Section 401 Water Quality Certification

5. U.S. Army Corps of Engineers New England District General Permit 2 and 6

C. The Contractor shall procure coverage under the US EPA National Pollutant Discharge Elimination System Construction General Permit from Construction Activities Permit for the 42-inch pipeline repair dewatering and EDV Chamber site dewatering discharge into the Sedimentation Basin overflow channel and comply with the requirements therein.

1.03 NOTIFICATIONS

A. The Engineer will notify the Contractor in writing of any non-compliance with the foregoing provisions or of any environmentally objectional acts and corrective action to be taken. State or local agencies responsible for verification of certain aspects of the environmental protection requirements shall notify the Contractor in writing, through the Engineer, of any non-compliance with State or local requirements. The Contractor shall, after receipt of such notice from the Engineer or from the regulatory agency through the Engineer, immediately take corrective action. Such notice, when delivered to the Contractor or his authorized representative at the site of the work, shall be deemed sufficient for the purpose. If the Contractor fails or refuses to comply promptly, the Owner may issue an order stopping all or part of the work until satisfactory corrective action has been taken. No part of the time lost due to any such stop orders shall be made the subject of a claim for extension of time or for excess costs or damages by the Contractor unless it is later determined that the Contractor was in compliance.

1.04 IMPLEMENTATION

A. Prior to commencement of the work, meet with the Engineer to develop mutual understandings relative to compliance with environmental protection procedures.

B. Remove temporary environmental control features, when approved by the Engineer, and incorporate permanent control features into the project at the earliest practicable time.

PART 2 – PRODUCTS (NOT USED. See Section 01568 and Section 02480.)

PART 3 – EXECUTION

3.01 EROSION CONTROL:

A. Provide positive means of erosion control such as shallow ditches around construction to carry off surface water. Erosion control measures such as siltation basins, straw check dams, mulching, jute netting, and other equivalent techniques shall be used as identified in the Order of Conditions and 401 Water Quality Certification, and as indicated on the drawings. Offsite surface water shall be diverted around the site to a downstream channel upslope of siltation barriers. Flow of surface water into excavated areas shall be prevented. Ditches around construction area shall also be used to carry away water resulting from dewatering of excavated areas. At the completion of the work, ditches shall be backfilled and the ground surface restored to original condition. See Section 1568 for additional details.

B. During construction, Contractor shall inspect the erosion controls on a daily basis and shall remove accumulated sediment as needed. The Contractor shall immediately control any erosion problems that occur at the site and shall also immediately notify the Engineer, which reserves the right to require additional erosion and/or damage prevention controls it may deem necessary.

3.02 PROTECTION OF STREAMS, WETLANDS, AND SURFACE WATER:

A. The boundaries of wetlands and streams are marked with pink and blue flagging, respectively. The wetland and waterbody boundary flags shall be maintained for the duration of construction and shall not be removed.

B. Swamp mats shall be installed where specified on the contract drawings using machinery from beyond the wetland boundaries. Swamp mats shall not be dragged into position. Swamp mats shall be of an appropriate loading capacity. Inspect mats for the presence of vegetation and to confirm that the mats are in good condition. To prevent the spread of invasive species, any vegetation observed on the mats shall be removed by hand prior to placing the mats. Swamp mats shall be approximately seven feet long by ten feet wide and placed perpendicular to the direction of traffic with no gaps in between to create a stable accessway to the wetland exclusion.

C. Timber matting shall be installed using machinery from beyond the streambed. Matting

shall be of an appropriate loading capacity. Timber matting shall be approximately 12" by 12". Approximately 16 timber mats shall be placed spanning the stream to achieve the desired width of 16'.

D. Trench boxes shall be utilized during the partial excavation of wetlands as designated on drawing 00 C-136.

E. At no time shall sediments be deposited in a wetland or waterbody (except for as described in Section 02480).

F. Care shall be taken to prevent or reduce to a minimum any damage to any stream, drainage ditch, storm drain, or sewer from pollution by debris, sediment, or other material, or from the manipulation of equipment and/or materials in or near such streams. Water that has been used for washing or processing, or that contains oils or sediments that will reduce the quality of the water in the stream, shall not be directly returned to the stream. Such water will be diverted through a settling basin or filter before being discharged to an upland area.

G. Excavated materials shall be stockpiled only in locations specified on the project plans or approved by the Engineer. Each soil layer (e.g., topsoil, subsoil) shall be stockpiled separately and shall not be intermixed. Upon completion of the pipe replacement, soil layers shall be replaced in the correct order (e.g., subsoil at the bottom, topsoil at the surface).

H. No leaves, grass clippings, brush, stumps, construction and yard debris, or materials of any kind shall be stored or dumped in a wetland or waterbody.

I. The Contractor shall not discharge water from dewatering operations directly into any live or intermittent stream, channel, wetlands, surface water, or any storm sewer. Water from dewatering operations shall be treated by filtration, settling basins, or other approved methods to reduce the amount of sediment contained in the water to allowable levels. Treated water shall then be discharged only in locations specified on the project plans or approved by the Engineer.

J. Preventative measures shall be taken to avoid spillage of petroleum products and other pollutants. Spill kits shall be kept with equipment and utilized in refueling activities. In the event of any spillage, prompt remedial action shall be taken in accordance with a contingency action drawing or plan approved by the Massachusetts Department of Environmental Protection. Contractor shall submit copies of approved contingency drawings or plans to the Engineer.

K. Storage of petroleum products shall be in an area approved by the Engineer and shall be 100 feet beyond wetlands/ intermittent streams and 200 feet beyond edges of perennial streams. Refueling at the Sedimentation Basin shall only occur where indicated on contract drawings. Refueling along the pipeline route shall only occur at least one

hundred feet away from any wetland or waterbody.

3.03 PROTECTION OF LAND RESOURCES:

A. Land resources within the project boundaries and outside the limits of permanent work shall be restored to a condition, after completion of construction, which will appear to be natural and not detract from the appearance of the project. Confine all construction activities to areas shown on the Drawings.

B. Outside of areas requiring earthwork for the construction of the new facilities, the Contractor shall not deface, injure, or destroy trees or shrubs, nor remove or cut them without prior approval. No ropes, cables, or guys shall be fastened to or attached to any existing nearby trees for anchorage unless specifically authorized by the Engineer. Where such special emergency use is permitted, first wrap the trunk with a sufficient thickness of burlap or rags over which softwood cleats shall be tied before any rope, cable, or wire is placed. The Contractor shall in any event be responsible for any damage resulting from such use.

C. Where trees may possibly be defaced, bruised, injured, or otherwise damaged by the Contractor's equipment, dumping, or other operations, protect such trees by placing boards, planks, or poles around them. Monuments and markers shall be protected similarly before beginning operations near them.

D. Any trees or other landscape features scarred or damaged by the Contractor's equipment or operations shall be restored as nearly as possible to its original condition. The Engineer will decide what method of restoration shall be used and whether damaged trees shall be treated and healed or removed and disposed of.

E. All scars made on trees by equipment, construction operations, or by the removal of limbs larger than 1-in. in diameter shall be coated as soon as possible with an approved tree wound dressing. All trimming or pruning shall be performed in an approved manner by experienced workmen with saws or pruning shears. Tree trimming with axes will not be permitted.

F. The locations of the Contractor's storage, and other construction building, required temporarily in the performance of the work, shall be cleared portions of the job site or areas to be cleared as shown on the Drawings and shall require written approval of the Engineer and shall not be within wetlands or floodplains. The preservation of the landscape shall be an imperative consideration in the selection of all sites and in the construction of buildings. Drawings showing storage facilities shall be submitted for approval of the Engineer.

G. Remove all signs of temporary construction facilities such as haul roads, work areas, structures, foundations of temporary structures, stockpiles of excess waste materials, or any other vestiges of construction as directed by the Engineer. It is anticipated that

excavation, filling, and plowing of roadways will be required to restore the area to near natural conditions, which will permit the growth of vegetation thereon. The disturbed areas shall be prepared and seeded as described in Section 01568, or as approved by the Engineer.

H. All debris and excess material will be disposed of outside wetland, streams, or floodplain areas in an environmentally sound manner. No fill will be discharged to the Sedimentation Basin.

3.04 PROTECTION OF AIR QUALITY:

A. Burning. The use of burning at the project site for the disposal of refuse and debris will not be permitted.

B. Dust Control. The Contractor will be required to maintain all excavations, embankments, stockpiles, access roads, plant sites, waste areas, borrow areas, and all other work areas within or without the project boundaries free from dust which could cause the standards for air pollution to be exceeded, and which would cause a hazard or nuisance to others. Water will be applied to exposed soils where necessary to control offsite dust emission.

C. An approved method of stabilization consisting of water sprinkling or other similar methods will be permitted to control dust. The use of chlorides is not permitted due to the proximity to the drinking water source.

D. Sprinkling, to be approved, must be repeated at such intervals as to keep all parts of the disturbed area at least damp at all times, and the Contractor must have sufficient competent equipment on the job to accomplish this if sprinkling is used. Dust control shall be performed as the work proceeds and whenever a dust nuisance or hazard occurs, as determined by the Engineer.

3.05 MAINTENANCE OF POLLUTION CONTROL FACILITIES DURING CONSTRUCTION:

A. During the life of this Contract, maintain all facilities constructed for pollution control as long as the operations creating the particular pollutant are being carried out or until the material concerned has become stabilized to the extent that pollution is no longer being created.

3.06 NOISE CONTROL:

A. The Contractor shall make every effort to minimize noises caused by construction operations. Equipment shall be equipped with silencers or mufflers designed to operate with the least possible noise in compliance with State and Federal (OSHA) regulations.

END OF SECTION

SECTION 01120

HEALTH AND SAFETY

PART 1 – GENERAL

1.01 DESCRIPTION OF WORK:

A. Protection of personnel working on the site and persons in the vicinity of the site from general activities and exposure to on-site contaminants and hazards generated or released as a result of the Contractor's work on site.

B. Contractor's requirements for preparing, submitting, and implementing a site-specific health and safety plan (HASP) to protect personnel working on the site, including the Engineer and the Owner’s representatives, and persons in the vicinity of the site from general project activities and exposure to on-site contaminants and hazards generated or released as a result of the Contractor's work on site.

C. The Contractor shall fulfill all legal requirements as the Confined Space Attendant and provide all appropriate equipment and services, for all OSHA 1910.146 Permit-Required Confined Space Entries required by the site Engineer including keeping safety and rescue equipment on site and in operable condition, maintained and tested per the manufacturer’s recommendations.

1.02 REFERENCES:

Contractor shall reference the following items or the most updated versions as appropriate:

A. Code of Federal Regulations (CFR) Title 29: Labor: U.S. Occupational Safety and Health Administration (OSHA), including, but not limited to the following:

1. 29 CFR 1904 - Recording and Reporting Occupational Injuries and Illnesses

2. 29 CFR 1910 - Occupational Safety and Health Standards

3. 29 CFR 1926 - Safety and Health Regulations for Construction.

B. ACGIH Threshold Limit Values and Biological Exposure Indices, 2003.

C. American National Standards Institute (ANSI) Z358.1 (1990) Emergency Eyewash and Shower Equipment

1.03 SUBMITTALS:

A. Site-specific HASP; to be prepared by the Contractor.

1. The HASP shall include all required records and certifications specified herein.

2. The HASP shall be signed by all Contractor personnel and its subcontractors prior to working at the site.

3. No on-site work will commence until the Contractor has submitted and the Engineer has reviewed the HASP.

4. Submittal of Contractor's HASP shall neither impose on Engineer responsibility for adequacy of HASP nor relieve Contractor from full responsibility thereof.

B. Documentation of successful completion of course in construction safety and health approved by the United States Occupational Safety and Health Administration that is at least 10 hours in duration for all employees to be employed at the worksite.

C. Permit-Required Confined Space Entry Safety Plan that at a minimum complies with requirements outlined in Section 2.02 of this specification.

D. Submit accident/incident reports and other reporting documentation required by law to the Engineer within 24 hours of accident.

1.04 PERFORMANCE REQUIREMENTS:

A. Prior to commencing work, the Contractor is required to submit a Site-Specific Health and Safety Plan (HASP) and specific Task Hazard Analyses for the work to be completed.

B. Comply with applicable laws and regulations of any public body having jurisdiction for safety of persons or property. Requirements delineated in this section are in addition to or an amplification of procedures and requirements of the referenced regulations and documents.

C. Initiate, maintain, and supervise safety precautions and programs in connection with the Work. Take necessary precautions for safety of employees and other persons and organization that may be affected by the Work. Implement and enforce health and safety

requirements and take necessary precautions and provide protection for the following:

1. Personnel working on or visiting site, irrespective of employer, including but not limited to, subcontractors hired by the Contractor, the Engineer, and the Owner's representatives.

2. Work and materials or equipment to be incorporated in work areas on site or off site.

3. Personnel potentially exposed to job related operations or potential release of toxic or hazardous materials.

D. Prior to construction initiation and at regular intervals during conduct of the Work, the Contractor shall conduct a safety meeting to discuss training on hazard recognition, response to emergencies, explanation of site activities, obtainment of safety supplies, identification of safety personnel, level of personal protection equipment (PPE) required, air monitoring activities, and any other topic relevant to the safety of workers at the site.

E. The responsibility of development, implementation, and enforcement of the HASP lies with the Contractor and their health and safety personnel.

PART 2 – PRODUCTS

2.01 GENERAL:

A. Site-specific HASP:

1. The HASP shall be prepared covering on-site work to be performed by the Contractor and all subcontractors. The Site Health and Safety Officer shall be responsible for the development, implementation, and oversight of the HASP. The HASP shall establish, in detail, the protocols necessary for the anticipation, recognition, evaluation, and control of hazards associated with each task performed. The HASP shall address site-specific health and safety requirements and procedures based upon site-specific conditions. The level of detail provided in the HASP shall be tailored to the type of work, complexity of operations to be performed, and hazards anticipated. Details about some activities may not be available when the initial HASP is prepared and submitted. Therefore, the HASP shall address, in as much detail as possible, anticipated tasks, their related hazards and anticipated control measures.

2. The Contractor is responsible for adequacy of HASP preparation, implementation, and enforcement.

2.02 PERMIT-REQUIRED CONFINED SPACE ENTRY SAFETY PLAN REQUIREMENTS:

A. The Contractor shall prepare and implement an effective Permit-Required Confined Space Entry Safety Plan which complies with all applicable federal, state, and local safety and occupational health laws and regulations. This includes but is not limited to the United States Occupational Safety and Health Administration (OSHA) General Industry Standard (29 CFR 1910) and Construction Industry Standards (29 CFR 1926) with specific attention to OSHA 29 CFR 1910.146 Permit-Required Confined Spaces.

B. At a minimum, the plan shall contain the following elements as required in OSHA 29 CFR 1910.146:

1. Procedures to coordinate entry with the host employer.
2. Procedures to prevent unauthorized entry.
3. Procedures to identify and evaluate hazards prior to entry.
4. Procedures for safe permit space entry.
5. Procedures to identify acceptable entry conditions.
6. Procedures for isolation of the permit space.
7. Procedures for purging, inerting, flushing or ventilating the space to eliminate or control atmospheric hazards.
8. Procedures for pedestrian, vehicle or other barriers and shields as necessary to protect entrants.
9. Procedures to verify that conditions in the permit space are acceptable for entry and for the duration of an authorized entry.
10. Testing and monitoring equipment needed, including but not limited to, direct-reading monitoring equipment to be used for oxygen content, flammable gases and vapors and all potential toxic air contaminants. Procedures for calibration of all equipment.
11. Ventilation equipment needed to obtain acceptable entry conditions.
12. Communications and alarm equipment.
13. Personal protective equipment required when feasible engineering and work practice controls do not adequately protect employees.
14. Lighting equipment needed.
15. Equipment, such as ladders and retrieval systems needed for safe ingress, egress, and rescue.
16. Rescue and emergency equipment.
17. Procedures for summoning rescue and emergency services, for rescuing entrants from permit spaces, for providing necessary emergency services to rescued employees and for preventing unauthorized personnel from attempting a rescue.
18. Procedures for preparation, issuance, and cancellation of entry permits.
19. Procedures to coordinate entry operations when employees of more than one employer are working simultaneously as authorized entrants in a permit space.
20. Provide a copy of an entry permit. Entry permit shall at a minimum meet all the requirements found in OSHA 29 CFR 1910.146 Appendix D.
21. Provide certifications of all authorized entrants, attendants, and entry supervisors. Certificates shall contain the employee's name, the signature of the trainer and the date of training.

22. Procedures for rescue and emergency services. See OSHA 29 CFR 1910.1469(k)(1) and OSHA 29 CFR 1910.146 Appendix F.
23. All other equipment necessary for safe entry into and rescue from permit spaces.

C. The Contractor shall provide on-site technical rescue services during Confined Space Entry activities due to insufficient local resources. These technical rescue services shall be made available to the Engineer when performing inspections of internal repairs.

D. At least one copy of the HASP shall be present at the site at all times.

PART 3 – EXECUTION

3.01 ORGANIZATIONAL RESPONSIBILITIES:

A. A Key Personnel and Organizational Chart indicating lines of authority, responsibility, and communication shall be presented in the HASP. The Contractor must provide an organization chart and resumes of the Contractor's key personnel involved in all phases of the sediment removal activities.

B. Site Health and Safety Officer (HSO). The Contractor must identify and assign an HSO for the project. That individual must be responsible to the Contractor and have the authority and knowledge necessary to implement the site HASP and verify compliance with applicable safety and health requirements.

1. The HSO shall have the following responsibilities and authority to perform the following functions:

a. Be present during site operations.

b. Have the authority to enforce the HASP and stop operations if personnel safety and health may be jeopardized.

c. Evaluate health monitoring data and make necessary field decisions regarding safety and health.

d. Initiate evacuation of the site if necessary.

e. The HSO will be the person responsible for causing an appropriate response to be undertaken during an emergency incident.

f. Consult with and coordinate any modifications to the HASP with the Contractor, Owner, and the Engineer.

g. Serve as a member of the Contractor's quality control staff on matters relating to safety and health.

h. Conduct accident investigations and prepare accident reports.

i. Recommend corrective actions for identified deficiencies and oversee the corrective actions.

2. The HSO shall meet the following minimum qualifications:

a. HSO shall possess a sound working knowledge of Massachusetts and Federal occupational safety and health regulations and shall have formal educational training in occupational safety and health. Documentation shall be provided that the HSO has completed the 40-hour OSHA Training Course, the 8-hour OSHA Supervisor Training Course and meets the field experience requirements.

b. Have documented experience that the HSO has worked on two (2) projects similar in nature to this one.

3.02 RISK ANALYSIS:

A. The HASP shall include a health and safety hazard/risk analysis for each site task and operation to be performed. The hazard/risk analysis shall provide information necessary for determining health and safety procedures, equipment, and training to protect on-site personnel, the environment, and the public. Available site information shall be reviewed when preparing the "Hazard/Risk Analysis" section of the HASP. The following elements, at a minimum, shall be addressed.

1. Site tasks and operations.

2. Safety and chemical hazards.

3. Action levels and required actions (engineering controls, changes in PPE, etc.)

3.03 MEANS TO CONTROL EMPLOYEE EXPOSURE:

A. Engineering and Work Practice Controls. The Contractor shall specify and implement engineering and work practice controls to minimize exposure of personnel working on the site to contaminants generated or released as a result of work on the site.

3.04 TRAINING:

A. Site Specific Training:

1. At a minimum, personnel shall receive training in accordance with the Contractor's written safety and health training program and 29 CFR 1926.21. The HASP shall

include a section describing training requirements.

2. Prior to construction, the Contractor shall provide site specific training that will provide, at a minimum, an awareness of planned operations, the site-specific HASP, the form and warning properties of potential hazards, work zones, locations of emergency/safety equipment, local emergency response procedures, site characteristics, levels of protection, communications, emergency facilities and signals, and evacuation procedures and supplement this with daily safety briefings as activities/operations change.

3. The Contractor shall provide a plan for safety and emergency response orientation and training for all employees.

B. Personnel Protective Equipment and Levels of Protection:

1. When engineering and work practice controls are not feasible, any reasonable combination of engineering controls, work practices, and PPE shall be used to reduce and maintain exposures at or below exposure limits. The Contractor shall provide and use, under each item of work requiring such protection, PPE.

2. The Contractor shall select PPE and shall assemble the PPE into levels of protection (LOP) or ensembles appropriate for the site.

3. The Contractor shall include in the HASP a list of components for each protective ensemble, the LOP selected for each task, the rationale for each task specific selection, and any contaminant action levels to be followed in LOP decision making.

The Contractor shall show evidence of a PPE program meeting the requirements of 29 CFR 1910 Subpart I.

3.06 PERSONAL PROTECTIVE EQUIPMENT:

A. In accordance with 29 CFR 1910.132, a written Personal Protective Equipment (PPE) program which addresses the elements listed in that regulation, and which complies with respiratory protection program requirements of 29 CFR 1910 Section .134, is to be included in the employer's Health and Safety Program. The HASP shall detail the minimum PPE ensembles (including respirators) and specific materials from which the PPE components are constructed for each site-specific task and operation to be performed based upon the hazard/risk analysis. Components of levels of protection (B, C, D, and modifications) must be relevant to site-specific conditions, including heat and cold stress potential and safety hazards. Only respirators approved by NIOSH shall be used. On-site personnel shall be provided with appropriate personal protective equipment. Protective equipment and clothing shall be kept clean and well maintained. The PPE section of the HASP shall include site-specific procedures to determine PPE program effectiveness and

for on-site fit-testing of respirators, cleaning, maintenance, inspection, and storage of PPE.

B. Levels of Protection: The Health and Safety Officer shall establish appropriate levels of protection for each work activity based on review of historical site information, existing data, an evaluation of the potential for exposure (inhalation, dermal, ingestion, and injection) during each task, past air monitoring results, and a continuing safety and health monitoring program. The Health and Safety Officer shall also establish action levels for upgrade or downgrade in levels of PPE from the following specified minimum levels of protection. Action limits, protocols, and the communication network for changing the level of protection shall be described in the HASP. The PPE reassessment protocol shall address air monitoring results, potential for exposure, changes in site conditions, work phases, job tasks, weather, temperature extremes, individual medical considerations, etc.

3.07 SITE STANDARD OPERATING PROCEDURES:

A. The Contractor shall be responsible for developing and implementing necessary standard operating procedures (SOPs) for all site operations.

3.10 CONTINGENCY PLANNING:

A. Emergency Response Plan. Prior to the start of site operations, the Contractor shall develop and implement an emergency response plan (ERP) to handle potential on-site emergencies. The ERP shall be incorporated into the site HASP as a separate section of that document and shall be periodically reviewed and, as necessary, amended to keep it current with new or changing site conditions or information.

B. Special Training:

1. The Contractor shall ensure that at least one person holding up-to-date certifications (American Red Cross or equivalent) in basic first aid (8-hour minimum) and CPR is present at the site during all site operations.

C. Accident and Exposure Reports:

1. The Contractor shall notify the Engineer of all related injuries, illnesses, or site accidents as soon as possible after the occurrence has been addressed and follow up in writing within 24 hours. This notification shall include, but not be limited to, the date, time and identity of individual(s) involved in the accident, witnesses to the accident, the nature of the accident, the actions taken to treat the victim(s), and the steps taken to prevent recurrence.

2. The Contractor shall notify the Engineer of all person(s) exposed at levels exceeding OSHA standards at the time of occurrence or determination and follow up in writing within 24 hours. This notification shall include, but not be limited to, the date, time, and identity of individual(s) involved in the exposure, witnesses to

the exposure, the nature of the exposure episode, what the individual(s) were exposed to, the personal protective equipment worn during the exposure, and the steps taken to prevent recurrence.

3. The Contractor shall immediately notify the Engineer whenever a local, state, or federal regulatory inspection is being conducted on site.

3.11 FIRE PREVENTION AND PROTECTION:

A. The Contractor shall develop procedures for handling and responding to small and large fires, including requests for emergency assistance and notifying the Engineer of the incident. The Contractor shall ensure that traffic lanes are available (not blocked).

3.12 INSPECTIONS:

A. The HSO shall perform and document daily inspections of the jobsite and the work in progress to ensure compliance with the Safety and Health Program, the HASP and other occupational health and safety requirements of the contract, and to determine the effectiveness of the HASP. Procedures for correcting deficiencies (including actions, timetable, and responsibilities) shall be described in the HASP. Follow-up inspections to ensure correction of deficiencies shall be conducted and documented. Safety inspection logs shall be used to document the inspections, noting safety and health deficiencies, deficiencies in the effectiveness of the HASP, and corrective actions taken. The HSO's Safety Inspection Logs shall be attached to and submitted with the Quality Control reports. Each entry shall include the following: date, work area checked, employees present in work area, PPE and work equipment being used in each area, special safety and health issues and notes, and signature of preparer. In the event of an accident, the Engineer shall be notified immediately. An Accident Report shall be completed within 24 hours of any reportable accident and submitted to the Engineer.

END OF SECTION

SECTION 01151

MEASUREMENT AND PAYMENT

PART 1 - GENERAL

1.01 SCOPE:

A. The purpose of this section is to define the basis of measurement and payment for each of the unit price or lump sum items listed in the Form for General Bid. Contractor shall acquaint himself with all Work associated with each payment item and shall have no claim for additional compensation due to its unfamiliarity with the requirements of various items.

B. No payment will be made for any item until Contractor has submitted all required Certificates of Compliance as specified. Certificates of Compliance shall include any mean certificates, manufacturer's certificates, certifications, certified copies, letters of certification and certificate of materials. Refer to Section 01300 for additional information.

C. No payment will be made for materials furnished to the Project Site that are not installed as part of the Work of the Project. Contractor shall provide evidence of work completed including construction photographs, as-built drawings, and other items as referenced in Section 01152.

D. Each unit or lump-sum price stated in the BID shall constitute full compensation as herein specified for each item of work completed in accordance with the drawings and specifications. The prices provided by the Contractor in the following bid items are all inclusive for the work described in the drawings and specifications, whether specifically mentioned in the individual bid items below or not.

1.02 BID ITEMS

Item No.	Designation	Type	Description
General			
1.		Lump Sum	Mobilization/ Demobilization
2.		Lump Sum	General Requirements
Items Relating to EDV Chamber			
3.		Lump Sum	Construction of Energy Dissipation Valve Chamber
4.		Unit Price	Procurement of Mokveld Energy Dissipation Valves
5.		Unit Price	Block Retaining Walls

Item No.	Designation	Type	Description
Items Relating to 42-Inch Repair			
6.		Unit Price	Internal Pipe Joint Testing
7.		Lump Sum	Pre-Repair HD CCTV and LiDAR Defect Mapping Inspection
8.	[J-MOR]	Unit Price	PCCP Internal Joint Repair with Mortar
9.	[J-SEAL]	Unit Price	Install PCCP Internal Joint Compression Seal without Joint Repair
10.	[J-MOR_SEAL]	Unit Price	Install PCCP Internal Joint Compression Seal with Joint Repair
11.	[P-MREP]	Unit Price	Remove and Replace Manway
12.	[P-REP]	Unit Price	Remove and Replace PCCP Pipe Segment
13.	[P-SEAL]	Unit Price	Install Internal Compression Pipe Seal
14.	[P-CoreLocal]	Unit Price	Repair Concrete Core Locally Along Pipe Barrel (Crown Region)
15.	[P-CoreFull]	Unit Price	Repair Concrete Core Along Full Length of Pipe Barrel (Crown Region)
16.	[P-CoreFull_I]	Unit Price	Repair Concrete Core Along Full Length of Pipe Barrel (Invert Region)
17.	[P-Crack]	Unit Price	Repair Concrete Cracks in Pipe Barrel
18.	[P-CFRP]	Unit Price	Install Carbon Fiber Reinforced Polymeric (CFRP) Composites
19.	[P-GFRP]	Unit Price	Install Glass Fiber Reinforced Polymeric (GFRP) Composites
20.	[P-MPaint]	Unit Price	Repaint Steel access Ring and Lids in Old Manway
21.	[P-MNew]	Unit Price	Remove Pipe and Install New Manway
22.	[P-Mult]	Unit Price	Repair Steel Pipe Cement Mortar Lining (CML) Cracks
23.	[P-Mult]	Unit Price	Repair Steel Pipe Cement Mortar Lining (CML)
24.	[N-AV]	Unit Price	Install New Air Release Valves
25.	[N-V]	Unit Price	Install Vaults at Air Valves and Manways
26.		Unit Price	Remote Transient Pressure Monitors
27.		Unit Price	12 inch Access/ Launch and Retrieval Locations
28.		Lump Sum	Post-Repair HD CCTV and LiDAR Defect Mapping Inspection
29.		Lump Sum	Internal Free-Swimming Leak and Air Pocket Detection Inspection

Item No.	Designation	Type	Description
Common Items			
30.		Unit Price	Sedimentation and Erosion Control
31.		Unit Price	Rock Excavation and Disposal
32.		Lump Sum	Final Cleaning and Flushing
33.		Unit Price	Paved Surface Restoration
34.		Unit Price	Unpaved Surface Restoration
35.		Unit Price Allowance	Asphalt Price Adjustment
36.		Unit Price Allowance	Portland Cement Price Adjustment
37.		Unit Price Allowance	Diesel Fuel and Gasoline Price Adjustment

1.03 BASIS OF MEASUREMENT AND PAYMENT

ITEM 1 MOBILIZATION/ DEMOBILIZATION

A. General. The lump sum price bid under this Bid Item for mobilization/demobilization shall be full compensation for all labor, equipment tools, and materials necessary to complete the Work as specified, which shall include transporting, mobilization, demobilization, temporary utility connection feeds, temporary facilities, maintenance & traffic controls, permits, licenses, bonds and insurance, as specified and all other incidental Work relative thereto.

B. Measurement. Mobilization, demobilization, and related expenses shall be a lump sum. This Item is meant for non-recurrent expenses related to establishment and close out of the Work.

C. Basis of Payment. Payment for mobilization/ demobilization shall be the lump sum price bid under this Bid Item 1.

a. The lump sum amount bid under this Bid Item shall not exceed 5% of the total bid amount, excluding this Bid Item itself, and no payment will be made in excess of this amount.

b. Payments shall be made in three equal installments. The first two (2) installments shall coincide with the first two (2) monthly payment requisitions, contingent upon Owner acceptance of the construction schedule and demonstration of satisfactory progress, as determined by the Engineer. The third installment shall be made when the Contractor has completed all

construction activity including final clean up, punch list Items, and satisfactory submission of As-Built documentation.

c. Insurance and bond premiums and permit fees shall be paid in full at the time the cost is incurred.

ITEM 2 GENERAL REQUIREMENTS

A. General. The price bid under this Bid Item is for costs related to administration and proper supervision of the Contract over the term of the Work.

B. Measurement. General Requirements and related expenses shall be a lump sum. This Item is meant for recurrent expenses over the term of the Work.

C. Basis of Payment. General requirements shall be paid for on a lump sum basis. This price and payment shall be full compensation for furnishing construction schedules including baseline and periodic updates, project manager, progress meetings, field office wages, Engineers field office and recurring field office expenses following initial mobilization, dumpsters, security fencing, utility charges, progress photographs, testing and laboratory analysis, pest control, dust control, snow removal within work zone, ongoing maintenance of as-built documents, equipment maintenance, project closeout costs, and all temporary facilities, labor, equipment, and materials required for or incidental to the Work for which separate payment is not provided under other Bid Items.

ITEM 3 CONSTRUCTION OF ENERGY DISSIPATION VALVE CHAMBER

A. General. The lump sum price for Item 3 shall constitute full compensation for the demolition of existing structures and equipment, and for the construction of the Energy Dissipation Valve Chamber, Equalization Tank, electrical duct bank, handholes, site lighting, gravel access road, all equipment, piping, yard piping, valves, 42-inch steel pipe, cathodic protection, and 60-inch steel pipe complete as a functional, tested, operating system, as indicated on the drawings and as specified, except for work included for payment under Items 4,5, and 6 to 37~~29~~ inclusive. Procurement (furnishing) of the Mokveld axial control valves is covered separately under Bid Item 4, but installation and testing are covered under Item 3.

B. Method of Measurement. Measurement for construction of the Energy Dissipation Valve Chamber shall be lump sum as approved by the Engineer.

C. Method of Payment. Payment for construction, testing, and commissioning of the Energy Dissipation Valve Chamber, Equalization Tank, electrical duct bank, handholes, site lighting, gravel access road, all equipment, associated piping, yard piping, ~~and~~ valves, 42-

inch steel pipe, cathodic protection, and 60-inch steel pipe, repaired 42-inch PCCP pipe, and all else required to complete the installation for an operable facility as designed, whether shown on the drawings or not, shall be the lump sum price under this bid Item, based on the percentage of Work completed as specified, tested, and approved by the Engineer, as included in Contractor's approved schedule of values.

ITEM 4 PROCUREMENT OF MOKVELD ENERGY DISSIPATION VALVES

A. General. The unit price bid under this Bid Item shall be full compensation for procurement and delivery of the energy dissipation valves.

B. Special Conditions. The energy dissipation valves shall be procured exclusively from Mokveld as a proprietary item. Refer to Specification Section 15110.

C. Method of Measurement. The number of energy dissipation valves to be paid for under the appropriate subdivisions of this item shall be equal to the actual number delivered and accepted by the Engineer. Payment will be made after delivery to the site.

D. Method of Payment. Payment for procurement of the Mokveld axial control valves shall be made at the unit price bid under this bid Item. The unit price of this item shall constitute full compensation for the cost of furnishing three energy dissipation valves, complete and associated shipping, delivery and off-loading to the designated area, as indicated on the drawings and as specified and not included for payment under other items.

ITEM 5 BLOCK RETAINING WALLS

A. General. The unit price bid under this Bid Item shall be full compensation for design, site preparation, and installation of block retaining walls with associated backfilling and drainage.

B. Method of Measurement. Where required, a block retaining wall shall be installed to maintain the integrity of the slope as encountered. Block retaining walls shall not be required in locations shown on the drawings if suitable, sound rock is discovered in those locations, and if approved by the Engineer.

C. The quantity of block retaining wall to be paid for under this item shall be the number of linear feet of block of average 2 ft, 4ft, or 6ft heights, measured in place after installation and authorized in writing by the Engineer.

D. Method of Payment. Payment for block retaining walls shall be made at the unit price bid per linear foot of wall, dependent on height, under this bid Item. The unit price shall

constitute full compensation for designing, procuring, shipping, and construction of block retaining walls, for all necessary backfilling and drainage, and for furnishing all additional material needed for backfilling and drainage.

ITEM 6 INTERNAL PIPE JOINT TESTING:

A. Measurement and payment shall be made by unit price bid per joint tested utilizing Cherne joint tester, along the entire pipeline irrespective of whether internal joint repair work is undertaken at the joints.

B. Basis for payment: Payment for performing 42-inch diameter internal pipe joint testing shall be full compensation for supplying joint testing equipment, inspecting, and preparing joint for testing, joint testing, inspecting for leaks, and all other work required or incidental to the satisfactory completion of this pay item. This shall also include a proportionate share of all items incidental to the contract including all items of work necessary to gain access to the site and facilitate the repair. The unit price shall include site access, daily transportation to the pipeline for the Engineer and Resident Engineer from the EDV Chamber, confined space entry, and rescue support for all confined space entry work including daily entries made by the Engineer for inspection. The Engineer/ Resident Engineer shall be a team member on the Contractor's confined space entry permit.

ITEM 7 PRE-REPAIR HD CCTV AND LIDAR DEFECT MAPPING:

A. Measurement and payment for HD CCTV and LiDAR Defect Mapping shall be on a lump sum basis.

B. Basis for payment: Payment for performing 42-inch diameter internal pre-repair HD CCTV and LiDAR defect mapping shall be full compensation for mobilization, supplying CCTV and LiDAR inspection equipment, inspecting, mapping defects, processing inspection data, quantifying defect sizes, reporting and all other work required or incidental to the satisfactory completion of this pay item. Unit price shall include site access, daily transportation to the pipeline for Engineer and Resident Engineer from EDV Chamber, confined space entry, and rescue support for all confined space entry work including daily entries made by the Engineer for inspection. The Engineer/ Resident Engineer shall be a team member on the Contractor's confined space entry permit.

ITEM 8 PCCP INTERNAL JOINT REPAIR WITH MORTAR

A. Measurement and payment shall be made by the unit price bid per pipe joint with designated repairs with mortar (Portland cement, epoxy-bonded epoxy mortar or polyurethane resin injection) at the locations shown (i.e., pipe joint locations with missing mortar) on the

Drawings in the completed project and accepted by the Engineer.

B. Basis for Payment: Payment for 42-inch PCCP internal joint repairs shall be compensation in full for the supply of all materials, all preparatory works, cleaning and flushing, quality control inspections and testing, and a proportionate share of all items incidental to the contract including all items of work necessary to gain access to the site and facilitate the repair. The unit price shall include site access, daily transportation to the pipeline for Engineer and Resident from EDV Chamber Engineer, confined space entry and rescue support for all confined space entry work including entries made daily by the Engineer for inspection. The Engineer/ Resident Engineer shall be a team member on the Contractor's confined space entry permit.

ITEM 9 PCCP INTERNAL JOINT COMPRESSION SEAL WITHOUT JOINT REPAIR

A. Measurement and payment shall be made by the unit price bid per the number of internal compression seal without joint repairs installed at the locations shown on the Drawings without performing any joint repair in the completed project and accepted by the Engineer.

B. Basis for payment: Payment for 42-inch PCCP internal compression seal shall be compensation in full for the supply of all materials, all preparatory works, cleaning and flushing, quality control inspections and testing, and a proportionate share of all items incidental to the contract including all items of work necessary to gain access to the site and facilitate the repair. The unit price shall include site access, daily transportation to the pipeline for Engineer and Resident Engineer from EDV Chamber Engineer, confined space entry and rescue support for all confined space entry work including entries made daily by the Engineer for inspection. The Engineer/ Resident Engineer shall be a team member on the Contractor's confined space entry permit.

ITEM 10 PCCP INTERNAL JOINT COMPRESSION SEAL WITH JOINT REPAIR

A. Measurement and payment shall be made by the unit price bid per the number of compression seals installed and internal pipe joints repaired with mortar (Portland cement, epoxy-bonded epoxy mortar or polyurethane resin injection) at the locations shown on the Drawings in the completed project and accepted by the Engineer.

B. Basis for payment: Payment for installing 42-inch PCCP internal joint compression seal and joint repair shall be full compensation for furnishing and installing internal mortar joint repairs (Portland cement mortar, epoxy-bonded epoxy mortar, or polyurethane resin injection) and compression seals as specified and includes the supply of all materials, all preparatory works, cleaning and flushing, quality control inspections and testing, and a proportionate share of all items incidental to the contract including all items of work necessary to gain access to the site and facilitate the repair. The unit price shall include site access, daily transportation to the pipeline for Engineer and Resident Engineer from EDV Chamber

Engineer, confined space entry and rescue support for all confined space entry work including entries made daily by the Engineer for inspection. The Engineer/ Resident Engineer shall be a team member on the Contractor's confined space entry permit.

ITEM 11 REMOVE AND REPLACE MANWAY

A. Measurement and payment shall be made by the unit price bid per the number of replacement manways with 30-inch outlet and closure cylinder actually furnished and installed at the locations shown on the drawings in the completed project and accepted by the Engineer.

B. Basis for payment: Payment for furnishing and installing 42-inch PCCP manway pipe with 30-inch outlet and closure cylinder will be made for each location shown on the Drawings, completed and accepted. This price will be full compensation for excavation (excluding rock and boulder excavation); site preparation; safeguarding open excavations, sheeting and bracing and/or installing trench box; furnishing and installing manway pipe complete with flanged outlet and blank flange, closure cylinder, bell rings and any special adapters; furnishing and installing bedding, filter fabric (where needed), jointing, joint restraints (where needed), cement diaper, dewatering, potholing, backfilling with select backfill, flowable fill and/or concrete, hydrostatic or internal joint testing; site security, and all work required for or incidental to the satisfactory completion of the items for which separate payment is not provided under other items in the Bid Form. No additional width or depth of trenches excavated in earth or rock shall be allowed at standard circular manholes.

1. The removal and disposal of the existing pipe and appurtenances as indicated on the drawings is incidental to the construction of the replacement manway pipe and shall be included in the unit price.
2. The unit price shall include site access, daily transportation to the pipeline for Engineer and Resident Engineer from EDV Chamber Engineer, confined space entry and rescue support for all confined space entry work including entries made daily by the Engineer for inspection. The Engineer/ Resident Engineer shall be a team member on the Contractor's confined space entry permit.

ITEM 12 REMOVE AND REPLACE PCCP PIPE SEGMENT

A. Measurement and payment shall be made by the unit price bid per the number of 42-inch diameter PCCP replacement pipe actually furnished and installed at the locations shown on the drawings in the completed project and accepted by the Engineer.

B. Basis for payment: Payment for furnishing and installing 42-inch PCCP replacement pipe and closure cylinder will be made for each location shown on the Drawings, completed and accepted. This price will be full compensation for excavation

(excluding rock and boulder excavation); site preparation; safeguarding open excavations, sheeting and bracing and/or installing trench box; furnishing and installing pipe with closure cylinder, bell rings and any special adapters; furnishing and installing bedding, filter fabric, where needed, jointing, joint restraints (where needed), cement diaper, dewatering, potholing, backfilling with select backfill and/or flowable fill, hydrostatic or internal joint testing; full-width pavement repair (where needed); site security, and all work required for or incidental to the satisfactory completion of the items for which separate payment is not provided under other items in the Bid Form.

1. The removal and disposal of the existing pipe and concrete encasement (where present), as indicated on the drawings is incidental to the construction of the water main and shall be included in the unit price.
2. The unit price shall include site access, daily transportation to the pipeline for Engineer and Resident Engineer from EDV Chamber Engineer, confined space entry and rescue support for all confined space entry work including entries made daily by the Engineer for inspection. The Engineer/ Resident Engineer shall be a team member on the Contractor's confined space entry permit.

3. Wherever bell holes are required for jointing pipe, they shall be provided without additional compensation over and above that resulting from measurements as above described.

ITEM 13 INSTALL INTERNAL COMPRESSION PIPE SEAL

A. Measurement and payment shall be made by the unit price bid per the number of compression seals actually installed in the pipe barrel at the locations shown on the Drawings in the completed project and accepted by the Engineer.

B. Basis for payment: Payment for 42-inch PCCP internal compression seal shall be compensation in full for the supply of all materials, all preparatory works, cleaning and flushing, quality control inspections and testing, and a proportionate share of all items incidental to the contract including all items of work necessary to gain access to the site and facilitate the repair. The unit price shall include site access, daily transportation to the pipeline for Engineer and Resident Engineer from EDV Chamber Engineer, confined space entry and rescue support for all confined space entry work including entries made daily by the Engineer for inspection. The Engineer/ Resident Engineer shall be a team member on the Contractor's confined space entry permit.

ITEM 14 REPAIR CONCRETE CORE LOCALLY - CROWN

A. Measure and payment shall be made by the unit price bid per pipe designated for

concrete core repairs in the pipe crown region at the locations shown on the Drawings in the completed project and accepted by the Engineer.

B. Basis of payment: Payment for local concrete core repairs shall be full compensation for furnishing all labor, materials and equipment necessary to remove deteriorated and loose concrete by hydroblasting; preparing concrete surface by wire brushing, saw cutting, and pneumatic chipping; cleaning and heating concrete surface; applying epoxy paste mortar (sand and epoxy resin) and epoxy bond-coat; thoroughly tamping, compacting, flattening and smoothing epoxy mortar against entire repair area to grade and hand troweling surface for smooth finish; removal of excess material; cleaning and flushing; quality control inspections and testing; and heat curing including a proportionate share of all items incidental to the contract including all items of work necessary to gain access to the site and facilitate the repair. The unit price shall include site access, daily transportation to the pipeline for Engineer and Resident Engineer from EDV Chamber Engineer, confined space entry and rescue support for all confined space entry work including entries made daily by the Engineer for inspection. The Engineer/ Resident Engineer shall be a team member on the Contractor's confined space entry permit.

1. Localized crown repairs per designated pipe shall include all repair up to and including 2 feet in width.

ITEM 15 REPAIR CONCRETE CORE FULL LENGTH OF PIPE – CROWN

A. Measurement and payment shall be made by the unit price bid per pipe with designated full length concrete core repairs in the pipe crown region at the locations shown on the Drawings in the completed project and accepted by the Engineer.

B. Basis of payment: Payment for full length of pipe concrete core repairs shall be full compensation for furnishing all labor, materials and equipment necessary to remove deteriorated and loose concrete by hydroblasting; preparing concrete surface by wire brushing, saw cutting, and pneumatic chipping; cleaning and heating concrete surface; applying epoxy paste mortar (sand and epoxy resin) and epoxy bond-coat; thoroughly tamping, compacting, flattening and smoothing epoxy mortar against entire repair area to grade and hand troweling surface for smooth finish; removal of excess material; cleaning and flushing; quality control inspections and testing; and heat curing including a proportionate share of all items incidental to the contract including all items of work necessary to gain access to the site and facilitate the repair. The unit price shall include site access, daily transportation to the pipeline for Engineer and Resident Engineer from EDV Chamber Engineer, confined space entry and rescue support for all confined space entry work including entries made daily by the Engineer for inspection. The Engineer/ Resident Engineer shall be a team member on the Contractor's confined space entry permit.

1. Full length crown repairs per designated pipe shall include all repair up to and including 2 feet in width.

ITEM 16 REPAIR CONCRETE CORE, FULL LENGTH OF PIPE – INVERT

A. Measurement and payment shall be made by the unit price bid per pipe with designated full length concrete core repairs in the pipe invert region at the locations shown on the Drawings in the completed project and accepted by the Engineer.

B. Basis of payment: Payment for 42-inch PCCP full length concrete core repair – invert shall be compensation for furnishing all labor, materials and equipment necessary to remove deteriorated and loose concrete by hydroblasting; preparing concrete surface by wire brushing, saw cutting, and pneumatic chipping; cleaning and heating concrete surface; applying epoxy paste mortar (sand and epoxy resin) and epoxy bond-coat; thoroughly tamping, compacting, flattening and smoothing epoxy mortar against entire repair area to grade and hand troweling surface for smooth finish; removal of excess material; cleaning and flushing; quality control inspections and testing; and heat curing including a proportionate share of all items incidental to the contract including all items of work necessary to gain access to the site and facilitate the repair. The unit price shall include site access, daily transportation to the pipeline for Engineer and Resident Engineer from EDV Chamber Engineer, confined space entry and rescue support for all confined space entry work including entries made daily by the Engineer for inspection. The Engineer/ Resident Engineer shall be a team member on the Contractor's confined space entry permit.

1. Full length invert repairs per designated pipe shall include all repair up to and including 2 feet in width.

ITEM 17 REPAIR CONCRETE CRACKS IN PIPE BARREL

A. Measurement and payment shall be made by the unit price bid per pipe with designated concrete core crack repairs at the locations shown on the Drawings in the completed project and accepted by the Engineer.

B. Basis of payment: Payment for local concrete cracks shall be full compensation for furnishing all labor, materials, and equipment necessary to perform the visual inspection; measurement of cack widths; cleaning; resin injection; and removal of excess material; cleaning and flushing; quality control inspections and testing; and a proportionate share of all items incidental to the contract including all items of work necessary to gain access to the site and facilitate the repair. The unit price shall include site access, daily transportation to the pipeline for Engineer and Resident Engineer from EDV Chamber Engineer, confined space entry and rescue support for all confined space entry work including entries made daily by the Engineer for inspection. The Engineer/ Resident

Engineer shall be a team member on the Contractor's confined space entry permit.

ITEM 18 INSTALL CFRP COMPOSITES

A. Measurement and payment shall be made by the unit price bid per pipe designated for CFRP Composite repair at the locations shown on the Drawings in the completed project and accepted by the Engineer.

B. Basis of payment: Includes furnishing all labor, materials and equipment necessary to perform the installation of a Type IV fully structural Carbon Fiber Reinforced Polymer (CFRP) liner within existing pipe as shown on the Contract Drawings, including dewatering and draining of pipes to be lined; cleaning and surface preparation of the existing pipeline segments,; design of the lining system; preparation and restoration of access points ; installation of bonded CFRP and GFRP composite laminates; making test samples; curing; and installing end terminations. All surface preparation, water mitigation, confined space and other safety programs, maintenance of environmental control equipment, mixing of epoxies, saturation of reinforcing fabrics, installation of the CFRP system, curing, supply of a QA/QC representative from the CFRP manufacturer, testing, and installation of end joint details shall be included and a proportionate share of all items incidental to the contract including all items of work necessary to gain access to the site and facilitate the repair. The unit price shall include site access, daily transportation to the pipeline for Engineer and Resident Engineer from EDV Chamber Engineer, confined space entry and rescue support for all confined space entry work including entries made daily by the Engineer for inspection. The Engineer/ Resident Engineer shall be a team member on the Contractor's confined space entry permit.

ITEM 19 INSTALL GFRP COMPOSITES

A. Measurement and payment shall be made by the unit price bid per pipe designated for GFRP Composite repair at the locations shown on the Drawings in the completed project and accepted by the Engineer.

B. Basis of payment: Includes furnishing all labor, materials and equipment necessary to perform the installation of a non-structural Glass Fiber Reinforced Polymer (GFRP) liner within existing pipe as shown on the Contract Drawings, including dewatering and draining of pipes to be lined; cleaning and surface preparation of the existing pipeline segments,; design of the lining system; preparation and restoration of access points ; installation of bonded GFRP composite laminates; making test samples; curing; and installing end terminations. All surface preparation, water mitigation, confined space and other safety programs, maintenance of environmental control equipment, mixing of epoxies, saturation of reinforcing fabrics, installation of the GFRP system, curing, supply of a QA/QC representative from the GFRP manufacturer, testing, and installation of end joint details shall be included and a proportionate share of all items incidental to the contract including all items of work

necessary to gain access to the site and facilitate the repair. The unit price shall include site access, daily transportation to the pipeline for Engineer and Resident Engineer from EDV Chamber Engineer, confined space entry and rescue support for all confined space entry work including entries made daily by the Engineer for inspection. The Engineer/ Resident Engineer shall be a team member on the Contractor's confined space entry permit.

ITEM 20 REPAINT STEEL ACCESS RINGS AND LIDS IN OLD MANWAY (Manhole 7 and 11)

A. Measurement and payment shall be made by the unit price bid per access ring and lid combination actually repainted at the locations shown on the Drawings and accepted by the Engineer. Manhole 11 shall only be painted from inside the pipe.

B. Basis of Payment: Payment for repainting access rings and lids shall be full compensation for furnishing all labor, materials, and equipment required to clean and remove rust using hand power tools or wire brushes and repaint surfaces with NSF 61 approved epoxy paint following the paint manufacturer's installation instructions and a proportionate share of all items incidental to the contract including all items of work necessary to gain access to the site and facilitate the repair. The unit price shall include site access, daily transportation to the pipeline for Engineer and Resident Engineer from EDV Chamber Engineer, confined space entry and rescue support for all confined space entry work including entries made daily by the Engineer for inspection. The Engineer/ Resident Engineer shall be a team member on the Contractor's confined space entry permit.

ITEM 21 REMOVE PIPE AND INSTALL NEW MANWAY

A. Measurement and payment shall be made by the unit price bid per 42-inch diameter PCCP manway pipe with 30-inch outlet and closure cylinder actually furnished and installed at the locations shown on the drawings in the completed project and accepted by the Engineer.

B. Basis for payment: Payment for furnishing and installing 42-inch PCCP manway pipe with 30-inch outlet and closure cylinder for use at new manway locations full compensation for excavation (excluding rock and boulder excavation); site preparation; safeguarding open excavations, sheeting and bracing and/or installing trench box; furnishing and installing manway pipe complete with flanged outlet and blank flange, closure cylinder, bell rings and any special adapters; furnishing and installing bedding, filter fabric (where needed), jointing, joint restraints (where needed), cement diaper, dewatering, potholing, backfilling with select backfill, flowable fill and/or concrete, hydrostatic or internal joint testing; site security, and all work required for or incidental to the satisfactory completion of the items for which separate payment is not provided under other items in the Bid Form. No additional width or depth of trenches excavated in earth or rock shall be allowed at standard circular manholes.

1. The removal and disposal of the existing pipe as indicated on the drawings is

incidental to the construction of the new manway pipe and shall be included in the unit price.

2. The unit price shall include site access, daily transportation to the pipeline for Engineer and Resident Engineer from EDV Chamber Engineer, confined space entry and rescue support for all confined space entry work including entries made daily by the Engineer for inspection. The Engineer/ Resident Engineer shall be a team member on the Contractor's confined space entry permit.

ITEM 22 REPAIR STEEL PIPE CEMENT MORTAR LINING (CML) CRACKS

A. Measurement and payment shall be made by the unit price bid per pipe designated for CML crack repairs at the locations shown on the Drawings in the completed project and accepted by the Engineer.

B. Basis of payment: Payment for CML crack repair shall be full compensation for furnishing all labor, materials, and equipment necessary to perform the visual inspection; measurement of cack widths; cleaning and flushing; resin injection; and removal of excess material, quality control inspections and testing, and a proportionate share of all items incidental to the contract including all items of work necessary to gain access to the site and facilitate the repair. The unit price shall include site access, daily transportation to the pipeline for Engineer and Resident Engineer from EDV Chamber Engineer, confined space entry and rescue support for all confined space entry work including entries made daily by the Engineer for inspection. The Engineer/ Resident Engineer shall be a team member on the Contractor's confined space entry permit.

ITEM 23 REPAIR STEEL PIPE CEMENT MORTAR LINING (CML)

A. Measurement and payment shall be made by the unit price bid per steel pipe designated for CML damage repairs at the locations shown on the Drawings in the completed project and accepted by the Engineer.

B. Basis of payment: Payment for steel pipe CML repair shall be full compensation for furnishing all labor, materials and equipment necessary to perform the removal of loose CML; undercutting the borders of sound mortar; removing loose scale, rust, corrosion by-products from the steel pipe; cleaning and flushing the surface of the repair area; applying bond coat; applying cement slurry or epoxy mortar and working it under the borders of the repair area; thoroughly tamping, compacting, flattening and smoothing cement mortar or epoxy mortar against entire repair area to grade; hand troweling surface for smooth finish; curing and intermittent water spraying; quality control and testing; and a proportionate share of all items incidental to the contract including all items of work necessary to gain access to the site and facilitate the repair. The unit price shall include site access, daily transportation to the pipeline for Engineer and Resident Engineer from EDV Chamber Engineer, confined space entry and rescue support for all confined space entry work including entries made daily by the Engineer

for inspection. The Engineer/ Resident Engineer shall be a team member on the Contractor's confined space entry permit.

ITEM 24 INSTALL NEW AIR RELEASE/VACUUM VALVES

A. Measurement and payment will be made by the unit price bid per each combination air release/vacuum valve installed at the locations shown on the Drawings in the completed project and accepted by the Engineer.

B. Basis of Payment: Payment for installation shall be full compensation for furnishing all labor, materials, and equipment required for the installation of combination air release/vacuum valve in compliance with the details shown on the Contract Documents. Work in this item includes but is not limited to furnishing and installing all pipe, fittings, isolation valve, combination air/vacuum valve, base fittings, transition couplings, vent pipes, corporations, quality control inspections and testing, appurtenances, and a proportionate share of all items incidental to the contract including all items of work necessary to gain access to the site and facilitate the repair.

1. Item shall include the Material cost of the components of the combination air release/vacuum valve and all costs associated with Installation of the valve.
2. The unit price shall include site access, daily transportation to the pipeline for Engineer and Resident Engineer from EDV Chamber Engineer, confined space entry and rescue support for all confined space entry work including entries made daily by the Engineer for inspection. The Engineer/ Resident Engineer shall be a team member on the Contractor's confined space entry permit.

ITEM 25 INSTALL VAULTS AT AIR RELEASE/VACUUM VALVES AND MANWAYS

A. Measurement and payment shall be made by the unit price bid per manway vault installed at the locations shown on the drawings in the completed project and accepted by the Engineer.

B. Basis of Payment: Payment for installation of vaults shall be full compensation for furnishing all labor, materials, and equipment required for the installation of manway vault in compliance with the details shown on the Contract Documents. Work in this item includes but is not limited to: furnishing and installing precast concrete vault, including manhole frames and covers, rungs, and concrete fill or flowable fill; exterior concrete coatings and insulation; furnishing and installing all pipe and fittings for dewatering sumps; providing and sealing exterior joints of vault; coring, installing, sealing and taping vent pipe; dewatering, potholing, backfilling the vaults; furnishing and installing guard posts. All pipe located between the outside faces of the vault is included in this item and a proportionate share of all items incidental to the contract including all items of work necessary to gain access to the site and

facilitate the repair. No additional width or depth of trenches excavated in earth or rock shall be allowed at standard circular manholes. The unit price shall include site access, daily transportation to the pipeline for Engineer and Resident Engineer from EDV Chamber Engineer, confined space entry and rescue support for all confined space entry work including entries made daily by the Engineer for inspection. The Engineer/ Resident Engineer shall be a team member on the Contractor's confined space entry permit.

ITEM 26 REMOTE TRANSIENT PRESSURE MONITORS:

A. Measurement and payment shall be made by the unit price bid per remote transient pressure monitor (RTPM) installed as indicated on the Drawings and accepted by the Engineer.

B. Basis for payment: Payment for pre-programmed RTPM units shall be full compensation for furnishing and installing high-frequency (i.e., transient) pressure transducers and connected equipment including data loggers (pre-configured and programmed), easy-connect solar panels, environmental enclosures with stands and GPS antennas; installing pressure transducers at ½" threaded connection on 30" blind flanges; wiring and all other work required or incidental to the satisfactory completion of this pay item. This shall also include a proportionate share of all items incidental to the contract including all items of work necessary to gain access to the site and facilitate the repair. The unit price shall include site access, daily transportation to the pipeline for Engineer and Resident Engineer from EDV Chamber Engineer, confined space entry and rescue support for all confined space entry work including entries made daily by the Engineer for inspection. The Engineer/ Resident Engineer shall be a team member on the Contractor's confined space entry permit.

1. Contractor shall provide all required fittings whether shown or not shown on the Contract Drawings.

ITEM 27 12-INCH ACCESS STUBS FOR INLINE INSPECTION LAUNCH AND RETRIEVAL LOCATIONS:

A. Measurement and payment shall be made by the unit price bid per 12-inch access stub installed at one upstream and one downstream location as shown on the Contract Documents and approved by the Engineer.

B. Basis for payment: Payment for furnishing and installing 12-inch access stub for inline inspection at the launch and retrieval manway locations shall be full compensation furnishing and installing the access stubs. The price shall include all preparatory works, cleaning and flushing, and a proportionate share of all items incidental to the contract including all items of work necessary to gain access to the site and facilitate the repair. No additional width or depth of trenches excavated in earth or rock shall be allowed.

1. Contractor shall provide all required fittings whether shown or not shown on the Contract Drawings.
2. The unit price shall include site access, daily transportation to the pipeline for Engineer and Resident Engineer from EDV Chamber Engineer, confined space entry and rescue support for all confined space entry work including entries made daily by the Engineer for inspection. The Engineer/ Resident Engineer shall be a team member on the Contractor's confined space entry permit.

ITEM 28 POST-REPAIR HD CCTV AND LIDAR DEFECT MAPPING:

A. Measurement and payment for HD CCTV and LiDAR Defect Mapping shall be on a lump sum basis.

B. Basis for payment: Payment for performing 42-inch diameter internal post-repair HD CCTV and LiDAR defect mapping shall be full compensation for mobilization, supplying CCTV and LiDAR inspection equipment, inspecting, mapping defects, processing inspection data, quantifying defect sizes, reporting and all other work required or incidental to the satisfactory completion of this pay item. The unit price shall include site access, daily transportation to the pipeline for Engineer and Resident Engineer from EDV Chamber Engineer, confined space entry and rescue support for all confined space entry work including entries made daily by the Engineer for inspection. The Engineer/ Resident Engineer shall be a team member on the Contractor's confined space entry permit.

ITEM 29 INTERNAL FREE-SWIMMING LEAK & AIR POCKET DETECTION INSPECTION:

A. Measurement and payment for inspection and reporting using a free-swimming in-service leak and air pocket inspection tool trackable at fixed positions along the pipeline for accurate positioning shall be on a lump sum basis. This item cannot be completed until after the construction of the EDV Chamber is complete and the steel manifold has been hydraulically tested.

B. Basis for payment: Payment for performing 42-inch diameter in-service leak and air pocket inspection shall be full compensation for mobilization, supplying inspection equipment, tool deployment and retrieval, inspecting, detecting, and locating leaks and air pockets, sizing leaks, processing inspection data, reporting, and all other work required or incidental to the satisfactory completion of this pay item. The unit price shall include site access, daily transportation to the pipeline for Engineer and Resident Engineer from EDV Chamber Engineer, confined space entry and rescue support for all confined space entry work including entries made daily by the Engineer for inspection. The Engineer/ Resident Engineer shall be a team member on the Contractor's confined space entry permit.

ITEM 30 SEDIMENTATION AND EROSION CONTROL

A. General. The unit price bid under this Bid Item shall be full compensation for site preparation required by the Order of Conditions and as shown on the contract documents.

B. Measurement: Straw bales and siltation fencing will be measured for payment on a linear foot basis as shown on the Drawings. The length of straw bales and siltation fence will be the actual approved length of both straw bales and siltation fence measured in place by the Engineer.

C. Method of Payment. Payment for erosion and sediment control measures shall be made at the unit price bid under this bid Item. Erosion and sedimentation control shall be paid for on a unit price basis for the quantity of straw bales and silt fences installed or as determined by the Engineer. The payment shall be full compensation for furnishing, installing, maintaining, and removal of the erosion and sedimentation control, all labor, equipment, and materials required for, or incidental to, the control of erosion and sedimentation not covered by other Items.

ITEM 31 ROCK EXCAVATION AND DISPOSAL:

A. General. The unit price bid under this Bid Item shall be full compensation for all labor, tools, materials, and equipment necessary to complete the Work as specified which shall include excavation; drilling and splitting; use of hydraulic or pneumatic hammers, removal and legal disposal of rock, boulders, and/or concrete, furnishing and placing replacement materials, backfilling and compaction, as specified and any other incidental Work relative thereto. Blasting is not allowed.

1. The unit price shall constitute full compensation for rock excavation and disposal, for all necessary backfilling, and for furnishing all additional material needed for backfilling.

2. Payment per the unit price under this Item 31 shall include furnishing suitable material from outside sources if onsite material suitable for backfilling is not available in sufficient quantity. .

3. No additional cost for outside material is allowed.

B. Method of Measurement: When rock is encountered, the material shall be uncovered, and the Engineer notified. The Engineer will then take cross sections of the rock surface, unless in the opinion of the Engineer, satisfactory measurements can be made in some other manner. If the Contractor fails to uncover the ledge, notify the Engineer, and allow ample time for cross sectioning the undisturbed material, the Contractor shall have no right-of-claim to any

classification other than that allowed by the Engineer. Removal of buried old concrete foundations, if any, shall be classified as rock.

1. Measurement of rock excavation in pipe trenches will extend to the width specified below:

Depth from Ground Surface to Pipe Invert:	Maximum Pay Width:
0 ft – 12 ft	D + 3-ft 0-in.
12 ft – 20 ft	D + 5-ft 0-in.

2. Measurement for depth shall be from the top of the rock formation to the normal depth of the pipe as shown on the Drawings.

3. The quantity of rock and boulder excavation to be paid for shall be the number of cubic yards of rock or boulders measured in place before excavation, within the limits of normal excavation as defined above, unless rock excavation beyond such limits has been authorized in writing by the Engineer, in which case measurement shall be made to the authorized limits.

C. Basis for payment: Payment for rock and boulder excavation will be made for the quantities as determined above at the established unit price in the Bid Form. This price and payment shall be full compensation for excavation and disposal of rock and boulder and in accordance with all federal, state, and local regulations, backfilling, and providing borrow for any deficiency of trench backfill, blasting plan submittals, blast monitoring, and all work incidental thereto, for which payment is not provided under other items in the Bid Form.

1. No payment will be made for boulders less than 1 cubic yard in volume or other materials found in the excavations, no matter how stiff, heavy and/or compact, including rippable rock, which in the opinion of the engineer, can be removed without drilling and splitting or the use of hydraulic or pneumatic hammers.

2. Excavated rock which has not been disposed of will not be included for payment.

ITEM 32 FINAL CLEANING AND FLUSHING:

A. Measurement: Payment for cleaning and flushing the 42-inch raw water bypass conveyance pipeline and EDV Chamber shall be on a lump sum basis.

B. Basis for Payment: Payment for the lump sum bid for cleaning and flushing of the raw water bypass conveyance pipeline and EDV Chamber shall be full compensation for furnishing all labor, equipment, materials, and incidentals for cleaning and flushing, coordinating all work, and all other work required or incidental to the satisfactory completion of this pay item.

1. Payment for cleaning and flushing 42-inch raw water bypass conveyance pipeline and EDV chamber will only be made once.

ITEM 33 PAVED SURFACE RESTORATION

A. Temporary Pavement

1. General. Temporary pavement repair shall be measured on a square foot basis for Work complete as shown, specified, or as directed by the Engineer to the limits shown in the details or described in the Contract Documents. Temporary pavement repair shall only be paid once for any given location.

2. Method of Measurement. Temporary pavement shall be measured for payment over areas disturbed by the Work including installation of conduit, demolition or repairs to existing pavement, or other areas as identified by the Engineer. The repairs shall be full width cut for the full length of the repair conducted, unless otherwise clarified by the Engineer.

3. Method of Payment. Payment for the temporary pavement repair shall be made at the unit price bid under this bid Item. Temporary trench pavement repair, complete in place and approved by the Engineer, shall be paid for at the Contract unit price bid per square foot. This price and payment shall be full compensation for furnishing, hauling, placing, and compacting the temporary bituminous concrete, maintaining the temporary repair, repairing/replacing existing loop detectors, and all labor, materials, equipment, and all other Items necessary to complete the Work as shown and specified but not included for payment under other Items in the Bid Form.

    a. No additional payment shall be made for leveling courses or rework of if needed due to the quality of work as directed by Engineer. No payment shall be made for normal daily cleanup Work, rework due to quality or maintenance, or for any Work not ordered in writing under this Item.

B. Permanent Pavement

1. General. Permanent pavement repair shall be measured on a square foot basis for Work complete as shown, specified, or as directed by the Engineer to the limits shown in the details or described in the Contract Documents. Permanent pavement repair shall only be paid once for any given location.

2. Method of Measurement.
    a. Permanent pavement surface restoration shall be measured on a square foot basis for Work complete to the payment limits as shown, specified, or as directed by the Engineer.

b. Permanent pavement shall be measured for payment over areas disturbed by the Work including installation of conduit, demolition or repairs to existing pavement, or other areas as identified by the Engineer. The repairs shall be full width cut for the full length of the repair conducted, unless otherwise directed by the Engineer.

3. Method of Payment. Payment for the permanent pavement repair shall be made at the unit price bid under this bid Item. Permanent paved surface restoration, complete in place and approved by the Engineer, shall be paid for at the Contract unit price. The price and payment shall be full compensation for saw-cutting, removal and disposal of the temporary repair and cutback materials, processed aggregate base, preparing the road base, cleaning and priming the edges off existing pavement, applying bitumen tack coat, hot poured rubberized asphalt sealer, dust control, furnishing, hauling, placing and compacting the bituminous concrete, installation of the permanent repair, and performing all finishing work and all other Items necessary to complete the Work as shown and specified but not included for payment under other Items in the bid Form.
    a. No additional payment shall be made for leveling courses if needed. No payment shall be made for normal daily cleanup, Work, or for any Work not ordered in writing under this Item.

ITEM 34 UNPAVED SURFACE RESTORATION

A. Upland Restoration

1. General. The unit price bid under this Bid Item shall be full compensation for loaming and seeding for lawn restoration.

2. Method of Measurement. Loaming and seeding for lawn restoration shall be measured on a square feet basis for work complete as directed by the Engineer and shown in the details or described in the Contract Documents.

3. Method of Payment. Loaming and seeding, complete in place and approved by the Engineer, shall be paid for at the Contract unit price. This price and payment shall be full compensation for providing all labor, equipment and materials required for and incidental to the Work. Refer to Section 02480.

B. Wetland Restoration

1. General. The unit price bid under this Bid Item shall be full compensation for wetlands restoration.

2. Method of Measurement. Wetland restoration shall be measured on a square feet basis for work complete as directed by the Engineer and shown in the details or described in the Contract Documents and Order of Conditions.

3. Method of Payment. Payment for wetland restoration shall be made at the unit price bid under this bid Item. Wetland restoration, complete in place and approved by the Engineer, shall be paid for at the Contract unit price. This price and payment shall be full compensation for providing all labor, equipment and materials required for and incidental to the Work. Refer to Section 02480.

ITEM 35 ASPHALT PRICE ADJUSTMENT

A. General. Asphalt price adjustment shall apply to Contract Bid Items 7A and 7B and applies to all projects using greater than 100 tons of hot mix asphalt (HMA) containing liquid asphalt cement as stipulated in the Instructions to Bidders section of the bid documents.

B. Base Price: The Base Price of liquid asphalt is the fixed price determined at the time of Bid by the Owner by using the same method as for the determination of the Period Price Detailed below.

C. Price Adjustment: The Price Adjustment will be based on the variance in price for the liquid asphalt component only from the Base Price to the Period Price. It shall not include transportation or other charges. The Price Adjustment will occur on a monthly basis.

D. Period Price: The Period Price for this Contract shall be the current "New Asphalt Price Method" Liquid Asphalt Period Price, in English Units, as published by the Massachusetts Department of Transportation – Highway Division at

https://www.mass.gov/info-details/massdot-current-contract-price-adjustments

E. Applicability: The Price Adjustment applies only to the actual virgin liquid asphalt content in the mixture placed on the Project in accordance with the Contract Documents.

F. Payment/ Credit of Price Adjustment: The Price Adjustment, as herein provided, upwards or downwards, will be made after the Work has been performed, using the monthly Period Price for the month during which the Work was performed. The Price Adjustment will be determined by multiplying the number of tons of hot asphalt mixtures placed during each monthly period times the liquid asphalt content percentage times the variance in price between Base Price and period Price of liquid asphalt. No further Price Adjustments will be processed after the Contract is complete unless an extension of Contract time is approved by the Owner.

Price Adjustments will be paid only if the variance from the Base Price is 5% or more for a monthly period. The complete adjustment will be paid in all cases with no deduction of the 5% from either upward or downward adjustments.

ITEM 36 PORTLAND CEMENT PRICE ADJUSTMENT

A. General. Portland Cement price adjustment shall apply to Contract Bid Item 3 and applies to projects using greater than 100 cubic yards of Portland Cement concrete or concrete containing Portland cement as stipulated in the Instructions to Bidders section of the bid documents.

B. Base Price: The Base Price of Portland cement is the fixed price determined at the time of Bid by the Owner by using the same method as for the determination of the Period Price Detailed below.

Price Adjustment: The Price Adjustment will be based on the variance in price for the Portland cement component only from the Base Price to the Period Price. It shall not include transportation or other charges. The Price Adjustment will occur on a monthly basis.

C. Period Price: The Period Price for this Contract shall be the current Portland cement Period Price, in English Units, as published by the Massachusetts Department of Transportation – Highway Division at

https://www.mass.gov/info-details/massdot-current-contract-price-adjustments

D. Applicability: The Price Adjustment applies only to the Portland cement content in the mix placed on the Project in accordance with the Contract Documents. No adjustments will be made for any cement replacement materials such as fly ash or ground granulated blast furnace slag.

E. Payment/ Credit of Price Adjustment: The Price Adjustment, as herein provided, upwards or downwards, will be made after the Work has been performed, using the monthly Period Price for the month during which the Work was performed. The Price Adjustment will be determined by multiplying the number of cubic yards of Portland cement concrete placed during each monthly period times the Portland cement content percentage times the variance in price between Base Price and period Price of liquid asphalt. No further Price Adjustments will be processed after the Contract is complete unless an extension of Contract time is approved by the Owner.

Price Adjustments will be paid only if the variance from the Base Price is 5% or more for a monthly period. The complete adjustment will be paid in all cases with no deduction of the 5% from either upward or downward adjustments.

ITEM 37 DIESEL FUEL AND GASOLINE PRICE ADJUSTMENT

A. General. Diesel Fuel and Gasoline price adjustment shall apply to Contract Bid Items 3 and 7 as stipulated in the Instructions to Bidders section of the bid documents.

B. Base Price: The Base Price of Diesel Fuel and Gasoline is the fixed price determined at the time of Bid by the Owner by using the same method as for the determination of the Period Price Detailed below.

C. Price Adjustment: The Price Adjustment will be based on fuel usage factors developed by the Highway Research Board in circular 158, dated July 1974. These factors will be multiplied by the quantities of work done in each item during each monthly period and further multiplied by the variance in price from the Base Price to the Period Price.

D. Period Price: The Period Price for this Contract shall be the current Diesel Period Price and Gasoline Period Price, in English Units, as published by the Massachusetts Department of Transportation – Highway Division at

https://www.mass.gov/info-details/massdot-current-contract-price-adjustments

E. Applicability: The Fuel Price Adjustment will apply only to the following items of Work listed at the fuel factors shown.

TABLE 1. FUEL USAGE FACTORS

	FUEL FACTORS	
ITEMS OF WORK COVERED	**DIESEL**	**GASOLINE**
Excavation (Earth)	0.29 Gallons/ CY	0.15 Gallons/ CY
Excavation (Rock)	0.39 Gallons/ CY	0.18 Gallons/ CY
Backfill (Earth)	0.29 Gallons/ CY	0.15 Gallons/ CY
Asphalt Surfacing Work (All items containing Hot Mix Asphalt)	0.39 Gallons/ Ton	Does Not Apply

F. Payment/ Credit of Price Adjustment. The Price Adjustment, as herein provided, upwards or downwards, will be made after the Work has been performed, using the monthly Period Price for the month during which the Work was performed. The Price Adjustment will be determined by multiplying the number of units of each item of Work during each monthly period times the variance in price between Base Price and period Price of diesel or gasoline. No further Price Adjustments will be processed after the Contract is complete unless an extension of Contract time is approved by the Owner.

Price Adjustments will be paid only if the variance from the Base Price is 5% or more for a

monthly period. The complete adjustment will be paid in all cases with no deduction of the 5% from either upward or downward adjustments.

1.04 EXTRA WORK:

A. Extra work, if any, shall be performed in accordance with Article 10 of the General Conditions and will be paid for in accordance with Article 11 of the General Conditions.

PART 2: PRODUCTS (Not Used)

PART 3: EXECUTION (Not Used)

END OF SECTION

SECTION 01152

APPLICATIONS FOR PAYMENT

PART 1 - GENERAL

1.01 DESCRIPTION:

A. The Contractor shall submit Applications for Payment to the Engineer in accordance with the schedule established by Conditions of the Contract and Agreement between Owner and Contractor.

B. The accepted Schedule of Values, as described in Section 01370, shall be used as the basis for the Contractor's Application for Payment.

1.02 RELATED SECTIONS:

A. Section 01310, Progress Schedules

B. Section 01380, Construction Photographs

C. Section 01370, Schedule of Values

D. Section 01700, Contract Closeout

E. Section 01720, As-Built Documents

1.03 SUBMITTALS:

A. Submit to the Engineer, in accordance with Section 01300, applications typed on forms provided by the Owner, Application for Payment, with itemized data typed on 8½-in by 11-in or 8½-in by 14-in white paper continuation sheets.

B. Provide itemized data on continuation sheet according to the format, schedules, line items, and values established in the Schedule of Values accepted by the Engineer.

C. Each Application for Payment shall be provided with the following documents attached and will be returned to the Contractor if any such information is missing or incomplete:

1. Monthly Construction Progress Report with Progress Schedule Update

2. Change Order Summary and Proposed Change Order (PCO) Log

3. Confirmation that as-built documents are current

4. All required SLBE/MBE/WBE current reporting data for the same period as the Application for Payment

5. Certified Payrolls for Contractor and Sub-Contractors

6. Construction photographs, if required

1.04 PREPARATION OF APPLICATION FOR EACH PROGRESS PAYMENT

A. Application Form

1. Fill in required information, including that for Change Orders executed prior to date of submittal of application.

a. Change Order work cannot be included in an Application for Payment until the month in which the Change Order document has been fully executed by the Owner.

2. Fill in summary of dollar values to agree with respective totals indicated on continuation sheets.

3. Execute certification with signature of a responsible officer of Contract firm.

B. Continuation Sheets

1. Fill in total list of all scheduled component Items of Work, with Item number and scheduled dollar value for each Item.

2. Fill in dollar value in each column for each scheduled line item when work has been performed or products stored.

a. Round off values to nearest dollar, or as specified for Schedule of Values.

3. List each Change Order executed prior to date of submission, at the end of the continuation sheets.

a. List by Change Order Number and description, as for an original component Item of work.

1.05 SUBSTANTIATING DATA FOR PROGRESS PAYMENTS

A. When the Owner or the Engineer requires substantiating data, submit suitable information, with a cover letter identifying:

1. Project.

2. Application number and date.

3. Detailed list of enclosures.

4. For stored products: Only if previously approved by the Owner as per Standard General Conditions paragraph 14.02.A.1 and applicable Supplementary Conditions.

   a. Documentation as detailed in Standard General Conditions paragraph 14.02.A.1 and applicable Supplementary Conditions.

   b. Description of specific material.

B. Submit one copy of data and cover letter for each copy of application.

C. Maintain an updated set of as-built drawings at the project site.

1. As a prerequisite for monthly progress payments, upon submittal of a pencil requisition to the Engineer, the Contractor shall meet with the Engineer and/or Owner to review the as built drawings and documentation.

2. All items requested for payment on a specific progress payment application shall be discretely indicated on the as built drawings. Items not included will not be authorized for payment until incorporated into the as built drawings at the discretion of the Engineer.

D. Invoice shall include a summary of all required SLBE/MBE/WBE expenditures.

E. Provide all data required by Paragraph 1.03, Submittals.

1.06 PREPARATION OF APPLICATION FOR FINAL PAYMENT

A. Fill in Application form as specified for progress payments.

B. Payment shall be in accordance with Section 00700.

C. Use continuation sheet for presenting the final statement of accounting as specified in Section 01700, Contract Closeout.

PART 2 – PRODUCTS – NOT USED

PART 3 – EXECUTION – NOT USED

END OF SECTION

SECTION 01200

PROJECT MEETINGS

PART 1 - GENERAL

1.01 PRECONSTRUCTION CONFERENCE:

A. In addition to the preconstruction conference required by Article 2.06 of the General Conditions, a preconstruction conference will be held between the Contractor, the Engineer, and the Owner to review the Contractor's proposed methods of complying with the requirements of the Contract Documents.

B. Contractor will be notified of the time, date, and place where the preconstruction conference will be held.

C. Prior to the initiation of construction, the Engineer and the Contractor shall arrange for a videoconference to be held with the Massachusetts Department of Environmental Protection Western Region Wetland Program. It shall be the responsibility of the Engineer to propose a platform for this videoconference, with whatever security protocols they may require; and to ensure that their representative(s) (if any), as well as the Contractor, all appointed compliance monitors and environmental consultants (if any), and all other pertinent firms or persons, are in attendance. The Contractor shall also ensure that all plans of record, contracts, and other pertinent documents are made available and viewable at this videoconference.

D. Prior to the initiation of construction, a pre-construction meeting shall be held between the Westfield Conservation Commission and/or its coordinator and the Contractor and the Engineer, site foreman, or construction manager. The applicant shall notify the Conservation Commission in writing the week before the desired meeting in order to arrange for a mutually agreed upon time and date. Prior to the agreed meeting date and time, all erosion control measures shall be installed as shown on the approved Plans.

1.02 PROGRESS MEETINGS WITH ENGINEER:

A. In addition to other regular project meetings for other purposes (as indicated elsewhere in the Contract Documents), hold general progress meetings twice each month with times coordinated with preparation of payment requests. Meeting dates shall be established by the Engineer. Require every entity then involved in the planning, coordination, or performance of work to be properly represented at each meeting. Include (when applicable) consultants, separate contractors (if any), principal subcontractors, suppliers/ manufacturers/fabricators, governing authorities, insurers, special supervisory personnel and others with an interest or expertise in the progress of the work. Review each entity's present and future needs including interface requirements, time, sequence, deliveries, access, site utilization, temporary facilities and services, hours of work, hazards and risks,

housekeeping, submittals, change orders, and documentation of information for payment requests. Discuss whether each element of current work is ahead of schedule. Determine how behind-time work will be expedited, and secure commitments from the entities involved in doing so. Discuss whether schedule revisions are required to ensure that current work and subsequent work will be completed within the Contract Time. Review everything of significance which could affect the progress of the work.

B. Within seven days after each progress meeting date, the Engineer will forward copies of the minutes-of-the-meeting, to the Contractor.

C. Immediately following each progress meeting where revisions to the Progress Schedule/Critical Path Schedule have been made or recognized (regardless of whether agreed to by each entity represented), revise the Schedule. Reissue revised Schedule within 10 days after meeting. At intervals matching the preparation of payment requests, revise and reissue the Schedule to show actual progress of the work in relation to the latest revision of the Schedule.

END OF SECTION

SECTION 01300

SUBMITTALS

PART 1 - GENERAL

1.01 DESCRIPTION:

A. This Section specifies the general methods and requirements of submissions applicable to the following work-related submittals.

1. Shop Drawings, Product Data and Samples.

2. Mock Ups.

3. Construction Photographs.

4. Contractor's Responsibilities.

5. Submission Requirements.

6. Review of Shop Drawings, Product Data, Working Drawings and Samples.

7. Distribution.

8. General Procedures for Submittals.

9. Certificate of Design.

10. Certificates of Compliance.

11. Schedules.

B. Additional general submission requirements are contained in Paragraph 6.17 of the General Conditions.

C. Detailed submittal requirements will be specified in the technical specifications section.

D. Project management software shall be utilized to track all submittals. Software shall be as provided by either one of the following software packages under their current published licensing agreements:

1. Sharepoint

2. Procore Technologies, Inc.
3. or approved equal

1.02 SHOP DRAWINGS, PRODUCT DATA, SAMPLES:

A. Shop Drawings:

1. Shop drawings, as defined in the General Conditions, and as specified in individual work Sections include, but are not necessarily limited to: custom-prepared data such as fabrication and erection/installation (working) drawings of concrete reinforcement, structural details and piping layout, scheduled information, setting diagrams, actual shopwork manufacturing instructions, custom templates, special wiring diagrams, coordination drawings, individual system or equipment inspection and test reports including performance curves and certifications as applicable to the work.

2. Contractor shall verify all field measurements, field construction criteria, materials, dimensions, catalog numbers and similar data, and coordinate each item with other related shop drawings and the Contract requirements.

3. All shop drawings shall be submitted using the transmittal form furnished by the Engineer.

4. All shop drawings submitted by subcontractors for approval shall be sent directly to the Contractor for checking. The Contractor shall be responsible for their submission at the proper time so as to prevent delays in delivery of materials.

5. The Contractor shall check all subcontractor's shop drawings regarding measurements, size of members, materials, and details to satisfy himself that they conform to the intent of the Drawings and Specifications. Shop drawings found to be inaccurate or otherwise in error shall be returned to the subcontractors for correction before submission thereof.

6. All details on shop drawings submitted for approval shall clearly show the relation of the various parts of the main members and lines of the structure, and where correct fabrication of the work depends upon field measurements, such measurements shall be made and noted on the drawings before being submitted for approval.

B. Product Data:

1. Product data as specified in individual Sections, include, but are not necessarily limited to, standard prepared data for manufactured products (sometimes referred to as catalog data), such as the manufacturer's product specification and printed installation

instructions, availability of colors and patterns, manufacturer's printed statements of compliances including certificates of compliance and applicability, roughing-in diagrams and templates, catalog cuts, product photographs, standard wiring diagrams, printed performance curves and operational-range diagrams, production or quality control inspection and test reports and certifications and recommended spare-parts listing, and printed product warranties, as applicable to the Work.

C. Samples:

1. Samples specified in individual Sections, include, but are not necessarily limited to, physical examples of the work such as sections of manufactured or fabricated work, small cuts or containers of materials, complete units of repetitively-used products, color/texture/pattern swatches and range sets, specimens for coordination of visual effect, graphic symbols, and units of work to be used by the Engineer or Owner for independent inspection and testing, as applicable to the Work.

1.03 MOCK UPS:

A. Mock Up units as specified in individual Sections, include but are not necessarily limited to, complete units of the standard of acceptance for that type of work to be used on the project. Remove at the completion of the work or when directed by the Engineer.

1.04 CONSTRUCTION PHOTOGRAPHS:

A. The Contractor shall provide construction photographs in accordance with requirements specified in Section 01380.

1.05 CONTRACTOR'S RESPONSIBILITIES:

A. The Contractor shall review shop drawings, product data and samples, including those by subcontractors, prior to submission to determine and verify the following:

1. Field measurements

2. Field construction criteria

3. Catalog numbers and similar data

4. Conformance with the Specifications

B. Each shop drawing, sample, and product data submitted by the Contractor shall have affixed to it the following Certification Statement including the Contractor's Company name and signed by the Contractor: "Certification Statement: by this submittal, I hereby represent that I have determined and verified all field measurements, field construction criteria, materials,

dimensions, catalog numbers and similar data, and I have checked and coordinated each item with other applicable approved shop drawings and all Contract requirements." Shop drawings and product data sheets 11-in. X 17-in. and smaller shall be bound together in an orderly fashion and bear the above Certification Statement on the cover sheet. The cover sheet shall fully describe the packaged data and include a listing of all items within the package. Provide to the Engineer a copy of each submittal transmittal form for shop drawings, product data and samples at the time of submittal of said drawings, product data and samples to the Engine

C. If a shop drawing shows any deviation from the requirements of the Contract Documents, the Contractor shall make specific mention of the deviations in the Transmittal Form furnished by the Engineer and provide a description of the deviations in a letter attached to the submittal.

D. The review and approval of shop drawings, samples or product data by the Engineer shall not relieve the Contractor from his responsibility with regard to the fulfillment of the terms of the Contract. All risks of error and omission are assumed by the Contractor, and the Engineer will not have responsibility therefor.

E. No portion of the work requiring a shop drawing, sample, or product data shall be started nor shall any materials be fabricated or installed prior to the approval or qualified approval of such item. Fabrication performed, materials purchased, or on-site construction accomplished which does not conform to approved shop drawings and data shall be at the Contractor's risk. The Owner will not be liable for any expense or delay due to corrections or remedies required to accomplish conformity.

F. Project work, materials, fabrication, and installation shall conform with approved shop drawings, applicable samples, and product data.

1. Manufacturer’s printed installation instructions, a part of product data submitted to the Engineer will not be reviewed and are for informational purposes only.

1.06 SUBMISSION REQUIREMENTS:

A. Make submittals promptly in accordance with approved schedule, and in such sequence as to cause no delay in the Work or in the work of any other contractor.

B. All submittals shall be submitted sufficiently in advance of construction requirements to provide no less than fourteen working days, excluding Saturdays, Sundays, and legal holidays for review from the time received at the Engineer’s reviewing office. For submittals of major equipment, which require more than fourteen days to review, due to its sheer complexity and amount of detail and also requiring review by more than one engineering discipline, a letter will be sent by the Project Manager or his/her designee to the Contractor informing him/her of the circumstances and the date it is expected the submittal will be returned to the Contractor.

C. Number of submittals required:

1. Shop Drawings: Unless otherwise stated in the respective Specifications Sections, submit six (6) copies, and submit one (1) electronic copy in Adobe PDF format (with printing enabled.

2. Product Data: Unless otherwise stated in the respective Specifications submit six (6) copies and submit one (1) electronic copy in Adobe PDF format (with printing enabled).

3. Samples: Submit the number stated in the respective Specification Sections to the office of the Engineer prepaid.

4. Operations and Maintenance Manuals: Unless otherwise stated in respective Specification Sections, submit one (1) electronic copy in Adobe PDF format (with printing enabled) and three (3) paper copies.

D. Submittals shall contain:

1. The date of submission and the dates of any previous submissions.

2. The Project title and number.

3. Contractor identification.

4. The names of:

   a. Contractor

   b. Supplier

   c. Manufacturer

5. Identification of the product, with the specification section number, page, and paragraph(s).

6. Field dimensions, clearly identified as such.

7. Relation to adjacent or critical features of the Work or materials.

8. Applicable standards, such as ASTM or Federal Specification numbers.

9. Identification of deviations from Contract Documents.

10. Identification of revisions on resubmittals.

11. An 8-in. X 3-in. blank space for Contractor and Engineer stamps.

E. Each shipment of drawings shall be accompanied by a transmittal form furnished by the Engineer providing a list of the drawing numbers and the names mentioned above.

F. Submittals shall be separated by specification section. Do not combine submittals for different specification sections under the same transmittal.

1.07 REVIEW OF SHOP DRAWINGS, PRODUCT DATA, WORKING DRAWINGS AND SAMPLES:

A. The Engineer's review is for general conformance with the design concept and contract documents. Markings or comments shall not be construed as relieving the Contractor from compliance with the contract plans and specifications or from departures therefrom. The Contractor remains responsible for details and accuracy, for coordinating the work with all other associated work and trades, for selecting fabrication processes, for techniques of assembly, and for performing work in a safe manner.

B. The review of shop drawings, data, and samples will be general. They shall not be construed:

1. as permitting any departure from the Contract requirements;

2. as relieving the Contractor of responsibility for any errors, including details, dimensions, and materials;

3. as approving departures from details furnished by the Engineer, except as otherwise provided herein.

C. If the shop drawings, data, or samples as submitted describe variations and show a departure from the Contract requirements which the Engineer finds to be in the interest of the Owner and to be so minor as not to involve a change in Contract Price or time for performance, the Engineer may return the reviewed drawings without noting an exception.

D. Shop drawings or product data submittals will be returned to the Contractor electronically via email. Samples will not be returned.

E. Submittals will be returned to the Contractor under one of the action codes indicated and defined on the transmittal form furnished by the Engineer.

F. Resubmittals will be handled in the same manner as first submittals. On resubmittals the Contractor shall direct specific attention, in writing, on the letter of transmittal and on resubmitted shop drawings by use of revision triangles or other similar methods, to revisions

other than the corrections requested by the Engineer, on previous submissions. Any such revisions which are not clearly identified shall be made at the risk of the Contractor. The Contractor shall make corrections to any work done because of this type of revision that is not in accordance with the Contract Documents as may be required by the Engineer.

G. Partial submittals may not be reviewed. The Engineer will be the only judge as to the completeness of a submittal. Submittals not complete will be returned to the Contractor and will be considered "Rejected" until resubmitted. The Engineer may at his option provide a list or mark the submittal directing the Contractor to the areas that are incomplete.

H. If the Contractor considers any correction indicated on the shop drawings to constitute a change to the Contract Documents, the Contractor shall give written notice thereof to the Engineer at least seven working days prior to release for manufacture.

I. When the shop drawings have been completed to the satisfaction of the Engineer, the Contractor shall carry out the construction in accordance therewith and shall make no further changes therein except upon written instructions from the Engineer.

1.08 DISTRIBUTION:

A. Distribute reproductions of approved shop drawings and copies of approved product data and samples, where required, to the job site file and elsewhere as directed by the Engineer. Number of copies shall be as directed by the Engineer but shall not exceed 6.

B. The Company will set up, manage and use a web-based secure project management software package such as SharePoint, Procore or equal for purposes of hosting and managing Project communication and documentation until Final Completion. The Company shall be responsible for the full cost for the project team including costs for LWSC and Designated Representative to have access to the site.

C. Provide eight (8) hours of software training at LWSC's office for web-based Project software users. Training shall also be accessible for remote virtual attendance.

1.09 GENERAL PROCEDURES FOR SUBMITTALS:

A. Coordination of Submittal Times: Prepare and transmit each submittal sufficiently in advance of performing the related work or other applicable activities, or within the time specified in the individual work sections, of the Specifications, so that the installation will not be delayed by processing times including disapproval resubmittal (if required), coordination with other submittals, inspection, testing (off-site and on-site), purchasing, fabrication, delivery and similar sequenced activities. No extension of time will be authorized because of the Contractor's failure to transmit submittals sufficiently in advance of the Work.

1.10 CERTIFICATE OF DESIGN:

A. If specifically specified in other Sections of these Specifications, the Contractor shall submit the applicable Certificate of Design for each item required, and in the form attached to this Section, completely filled in and signed and sealed by a registered professional engineer.

1.11 CERTIFICATES OF COMPLIANCE:

A. Certificates of Compliance as specified in the specifications shall include and mean certificates, manufacturer's certificates, certifications, certified copies, letters of certification and certificate of materials.

B. The Contractor shall be responsible for providing Certificates of Compliance as specified in the technical specifications. Certificates are required for demonstrating proof of compliance with specification requirements and shall be executed electronically in Adobe PDF format (printing enabled) unless otherwise specified. Each certificate shall be signed by an official authorized to certify on behalf of the manufacturing company and shall contain the name and address of the Supplier, the project name and location, and the quantity and date or dates of shipment or delivery to which the certificates apply. Copies of laboratory test reports submitted with certificates shall contain the name and address of the testing laboratory and the date or dates of the tests to which the report applies. Certification shall not be construed as relieving the Supplier from furnishing satisfactory material, if after tests are performed on selected samples, the material is found not to meet the specific requirements.

1.12 SCHEDULES:

A. Provide all schedules specified in Articles 2.05 B, 2.07, 14.01 and elsewhere in the General Conditions.

1.13 PROJECT CLOSEOUT SUBMITTAL:

A. At project completion the Contractor shall provide a full electronic download of all submittals described herein for the project in an organized fashion.

END OF SECTION

CERTIFICATE OF DESIGN

The undersigned hereby certifies that he/she is a Professional Engineer registered in the state of Massachusetts and that he/she has been employed by (Name of Contractor) _____ to design _____ in accordance with Specifications Section _____ for the 42-Inch Raw Water Conveyance Bypass Pipeline Rehabilitation and Energy Dissipation Valve Chamber. The undersigned further certifies that he/she has performed similar designs previously and has performed the design of the _____; that said design is in conformance with all applicable local, state, and federal codes, rules, and regulations and professional practice standards; that his/her signature and Professional Engineer (P.E.) Stamp have been affixed to all calculations and drawings used in, and resulting from, the design; and that the use of that stamp signifies the responsibility of the undersigned for that design.

The undersigned hereby certifies that he/she has Professional Liability Insurance with limits of $1,000,000.00 and a Certificate of Insurance is attached.

The undersigned hereby agrees to make all original design drawings and calculations available to the Town/City of Springfield, MA, or Owner's representative within seven (7) days following written request therefore by the Owner.

_____	_____
P.E. Name	Contractor's Name
_____	_____
Signature	Signature
_____	_____
Title	Title
_____	_____
Address	Address

CERTIFICATE OF UNIT RESPONSIBILITY
For Specification Section _____

_____
(Section title)

In accordance with Section 01300, paragraph 1.11 of the contract documents, the undersigned manufacturer accepts unit responsibility for all components of equipment furnished under specification Section _____ and the requirements specified in Section 01900. We hereby certify that these components are compatible and comprise a functional unit suitable for the specified and indicated performance and design requirements.

_____ _____
Notary Public Name of Corporation

_____ _____
Commission expiration date Address

Seal: By: _____
Duly Authorized Official

_____
Legal Title of Official

Date: _____

SECTION 01310

CONSTRUCTION PROGRESS SCHEDULES

PART 1 - GENERAL

1.01 DESCRIPTION:

CONTRACTOR shall prepare and submit to ENGINEER for review within 30 days after Notice to Proceed, a construction progress schedule using a cost loading format.

Assume no work shall be done between 4:00 p.m. and 7:00 a.m. nor on Sundays or legal holidays without written permission of OWNER. However, emergency work may be done without prior permission.

Night work and extended hours may be established by CONTRACTOR with written permission of OWNER to conduct specialty tasks. Such permission, however, may be revoked at any time by OWNER if CONTRACTOR fails to maintain adequate equipment and supervision for proper prosecution and control of work at night. Contractor is required to provide two weeks advance notice in writing to the Engineer and Owner for night work and/or extended hours, including anticipated duration of the extended hours. Refer to Section 01046.

1.02 FORM OF SCHEDULES:

A. Prepare schedules in form of a horizontal bar/Gantt chart.

1. Provide separate horizontal bar for each trade or operation.

2. Indicate critical path

3. Horizontal Time Scale: Identify first workday of each week.

4. Scale and spacing to allow space for notations and future revisions.

B. Format of Listings: Chronological order of start of each item of work.

C. Identification of Listings: By major specification section numbers.

1.03 CONTENT OF SCHEDULES:

A. Construction Progress Schedule:

1. Show complete sequence of construction by activity.

2. Show dates for beginning and completion of each major element of construction and installation dates for major items of equipment. Elements shall coordinate with the Schedule of Values and shall include, but not be limited to, the following:

   a. Shop drawing receipt from supplier/manufacturer submitted to ENGINEER, review and return to supplier/manufacturer.

   b. Material and equipment order, manufacturer, delivery, installation, and checkout.

   c. Monthly cash flow projections

   d. Performance tests and supervisory services activity.

   e. Ongoing compliance with Permitting Requirements

   f. Equipment Mobilization.

   g. Subsurface Utility Evaluations/Potholing/Test Pits.

   h. Piping, duct work, and wiring installation.

   i. Construction of various facilities.

   j. Concrete pour sequence.

   k. Structural steel erection.

   l. Precast concrete erection.

   m. Excavations for Manways, PCCP Pipe Segments, and CAV Vaults.

   n. Manways, PCCP Pipe Segments, and CAV Vaults Placements.

   o. Internal Joint Testing.

   p. Internal Pipe Repairs (By Type).

   q. Backfilling, grading, seeding, sodding, landscaping, fence construction, and paving.

   r. Electrical work activity.

   s. Heating, ventilating, and air conditioning work activity.

   t. Plumbing work activity.

u. Subcontractor's items of work.

v. Documentation of final conditions (internal and external).

w. Confirmatory Testing of Pipe Repairs and EDV.

x. Final cleanup.

y. Allowance for inclement weather.

z. Demolition.

aa. Miscellaneous concrete placement.

3. Cash flow projections.

a. Using the value assigned to each activity, the Contractor shall develop an estimated cash flow projection which will show the estimated monthly cash drawdown by activity and in the aggregate, by month, over the life of the Project.

b. The estimated cash flow projection shall be updated each month to show actual cash drawdown and a forecast of remaining payments to be made over the remaining life of the Project.

c. The estimated cash flow projection shall be solely for the convenience of the Owner in administering the Project and shall not be the basis for a claim for payment by the Contractor.

4. Show projected percentage of completion for each item as of first day of each month.

5. Show cost loading for each schedule item as required in Part 3 EXECUTION. The Value assigned to each activity should correspond to the approved Schedule of Values under Section 01370.

1.04 SCHEDULE REVISIONS:

A. Every 30 days CONTRACTOR shall revise construction schedule to reflect changes in progress of work.

1. Indicate progress of each activity at date of submittal.

2. Indicate critical path.

3. Cash flow projections.

4. Show changes occurring since previous submittal of schedule.

    a. Major changes in scope.

    b. Activities modified since previous submittal.

    c. Revised projections of progress and completion.

    d. Other identifiable changes.

5. Provide a narrative report as needed to define:

    a. Problem areas, anticipated delays, and impact on schedule.

    b. Corrective action recommended and its effect.

    c. Effect of changes on schedules of other CONTRACTORS.

6. Provide a 30 day look ahead schedule with each submittal.

1.05 SUBMITTAL REQUIREMENTS:

A. For initial submittal of construction schedule and subsequent revisions thereof, furnish six copies of schedule to ENGINEER and comply with the requirements of Section 01300, Submittals.

B. The Contractor shall submit updated schedules at progress meetings. If a schedule remains unchanged from one period to the next, the Contractor shall submit a written notice to that effect

C. The Contractor shall make submittals to the Engineer.

D. The Contractor shall attach a letter of transmittal to each submittal listing the items that have changed since the last submittal and discussion of problems that have caused delays and proposed countermeasures.

PART 2 – PRODUCTS

2.01 SOFTWARE

A. The scheduling software utilized to produce and update the schedules required herein must be capable of meeting all requirements of this specification.

B. Scheduling software used by the contractor must be commercially available from a software vendor for purchase with vendor software support agreements available.

C. Contractor shall designate an authorized representative to be responsible for the preparation of the schedule and all required updating and production of reports.

PART 3 – EXECUTION

3.01 BASIS FOR PAYMENT AND COST LOADING

A. The schedule shall be the basis for determining contract earnings during each pay period and therefore the amount of each progress payment. The aggregate value of all activities in the contract must equal the total contract value.

B. Assign costs to construction activities on the CPM schedule. Do not assign costs to submittal activities. Obtain Engineer's acceptance prior to assigning costs to fabrication and delivery activities.

1. Activity cost loading must be reasonable and without front-end loading. Activities with a negative cost loading are not allowed.

2. Activity costs are to be proportional to the scope of the Work of the activity and consistent with the Contractor's detailed bid.

C. Update the percent complete for each activity started, based on the realistic assessment of earned value.

END OF SECTION

SECTION 01370

SCHEDULE OF VALUES

PART I - GENERAL

1.01 RELATED WORK:

A. Section 01151: Measurement and Payment.

B. Section 01310: Construction Progress Schedules.

C. Section 01600: Control of Materials.

1.02 SUBMITTALS:

A. Submit to the Engineer a Preliminary Schedule of Values allocated to the various portions of the Work included in the Contractor's Preliminary Schedule, within 14 days after date of Notice to Proceed.

B. Submit to the Engineer a Final Schedule of Values allocated to the various portions of the Work within 14 days after receipt of the Engineer’s review comments of the Preliminary Schedule of Values.

C. Submit Documentation to support the values with data which will substantiate their correctness.

D. The Schedule of Values, when approved by the Engineer, shall be used as the only basis for the Contractor's Applications for Payment.

E. The Schedule of Values shall be supported by the Progress Schedule Activity Values assigned pursuant to Section 01310.

F. The Schedule of Values shall follow a Work breakdown structure (WBS) organized by design discipline and equipment number within each discipline.

1.03 FORM AND CONTENT OF SCHEDULE OF VALUES:

A. Identify the Schedule of Values with:

1. Title of Contract and location.

2. Contract number.

3. Name and Address of Contractor.

4. Date of Submission.

B. Enter Schedule of Values account information on forms furnished by the Engineer or on AIA Document G-702 or another format approved by the Engineer.

C. The Contractor's Schedule of Values shall list the installed value of the component parts of the Work in sufficient detail to serve as the basis for computing values for progress payments during construction.

D. The Contractor's Schedule of Values shall be itemized per Bid Form Items, at a minimum, and each item shall be broken down into adequate detail to reflect the Measurement and Payment detailed payment description.

E. Identify accounts with the number and title of the respective major Section of the Specifications.

F. All accounts in the Schedule of Values shall be tied to related activities in the Progress Schedule (refer to Paragraph 1.02.F above and Section 01310). Account data pertaining to the Schedule of Values shall include the following for each account:

1. Account code and description.

2. Account representative quantities (cubic yards of concrete, tons of steel), person-hours, and account dollar value.

3. WBS code based upon a coding system provided by the Contractor in accordance with Paragraph 1.02.F and approved by the Engineer.

4. Related activities in the Progress Schedule showing weight of each activity, with the total weight for each account equaling 100 percent.

G. The sum of all account values listed in the Schedule of Values shall equal the total Contract Price.

H. The Contractor shall include in his Schedule of Values items for site maintenance, noise restrictions, and work conducted outside of standard hours.

I. Provide a monthly cost breakdown of the above items.

1.04 SUBACCOUNTS:

A. The Contractor shall include a breakdown of major accounts into subaccounts on which progress payments will be requested. The subaccount breakdown shall show the weight

of each subaccount, e.g., delivered and stored on site, installation, etc., with the total weight of the subaccounts equal to 100 percent.

B. The form of the submittal shall parallel that of the Schedule of Values, with each account identified the same as the line item in the Schedule of Values.

C. The Contractor's Schedule of Values shall list the value of the products, manuals and services provided under the various Contract Specification Sections. The lists shall be sufficiently detailed to serve as a basis for computing values for progress payments during the construction period.

D. The unit quantity for bulk materials shall include an allowance for waste.

E. The unit values for the materials shall be broken down into:

1. Cost of the material.

2. Copies of paid invoices for component material shall be included with the payment request in which the material first appears.

F. The installed unit value multiplied by the quantity listed shall equal the cost of that account in the Schedule of Values.

PART 2 - PRODUCTS

Not used.

PART 3 - EXECUTION

Not used.

END OF SECTION

SECTION 01380

CONSTRUCTION PHOTOGRAPHS

PART 1 - GENERAL

1.01 DESCRIPTION:

A. Provide construction photographs pertinent to the Contract work during the Contract period as specified and as directed by the Engineer.

1. Section includes administrative and procedural requirements for the following:

a. Preconstruction photographs.

b. Periodic construction photographs.

c. Final completion construction photographs.

1.02 SUBMITTALS:

A. Submit the following shop drawings in accordance with Section 01300.

B. Qualification Data: Submit photographer qualifications for review and approval by the Engineer

C. Photograph Location Plan: Submit key plan of Project site and building with notation of vantage points of each photograph.

D. Digital Photographs: Submit electronic image files within seven (7) **calendar** days of taking photographs.

1. Digital Camera: Minimum sensor resolution of 8 megapixels.

2. Format: Minimum 3200 by 2400 pixels, in unaltered original files, with same aspect ratio as the sensor, uncropped, date and time stamped, in folder named by date of photograph, accompanied by key plan file.

3. Digital Photographs of all areas requiring excavation, erosion and sediment control, wetland restoration, pavement cuts, and pavement repair.

4. Identification: Provide the following information with each image description in file metadata tag:

a. Name of Project and Owner’s project number.

b. Name and contact information for photographer.

c. Name of Contractor.

d. Date photograph was taken.

e. Description of vantage point, indicating location, direction (by compass point), plan and profile sheet number, pipe length identification number from plan and profile sheet.

f. Unique sequential identifier keyed to accompanying key plan.

E. CONSTRUCTION PHOTOGRAPHS

1. Submit digital format photos in a digital format acceptable to Engineer.

2. Identification: Label each photograph with an identifier as specified herein or directed by the Engineer.

3. Identification: Provide the following information with each submitted flash drive:

a. Name of Project and Engineer's and Owner's project number.

b. Name and contact information for photographer.

c. Name of Engineer.

d. Name of Contractor.

e. Date photographs were taken and/or date range

f. Description of vantage point, indicating location, direction (by compass point), plan and profile sheet number, pipe length identification number from plan and profile sheet.

g. Unique sequential identifier keyed to accompanying key plan.

1.03 QUALITY ASSURANCE:

A. Photographer proposed to be approved by Engineer.

B. Photographer to use techniques, material, and equipment capable of producing photographs of high quality and resolution.

C. Dates for photography at site to be coordinated with Engineer and Engineer to be present during photographic periods at site unless approved otherwise by Engineer.

D. Photographer to make and retain detailed records of all photographs by photographer under this Contract:

1. The records to be in sufficient detail to support any attestation that may be required of photographer.

2. Photographer to retain such records for a period not less than two years from the final acceptance of entire work under this Contract.

1.04 USAGE RIGHTS:

A. Obtain and transfer copyright usage rights from photographer to Owner for unlimited reproduction of photographic documentation.

1.05 DELIVERY STORAGE AND HANDLING:

A. Comply with the requirements specified in Section 01610.

PART 2 - PRODUCTS

2.01 PHOTOGRAPHIC MEDIA:

A. Digital Images: Provide images in JPG format, produced by a digital camera with minimum sensor size of 8 megapixels, and at an image resolution of not less than 3200 by 2400 pixels.

PART 3 - EXECUTION

3.01 CONSTRUCTION PHOTOGRAPHS:

A. Photographer: Engage a qualified photographer to take construction photographs.

B. General: Take photographs using the maximum range of depth of field, and that are in focus, to clearly show the Work. Photographs with blurry or out-of-focus areas will not be accepted.

1. Maintain key plan with each set of construction photographs that identifies each photographic location.

C. Digital Images: Submit digital images exactly as originally recorded in the digital camera, without alteration, manipulation, editing, or modifications using image-editing software.

1. Date and Time: Include date and time in file name for each image.

2. Field Office Images: Maintain one set of images accessible in the field office at Project site, available at all times for reference. Identify images in the same manner as those submitted to Engineer.

D. Preconstruction Photographs: Before the start of any construction work, take photographs of Project site and surrounding properties, including existing items to remain during construction, from different vantage points, as directed by Engineer.

1. Flag construction limits for approval by the Engineer before taking construction photographs.

2. Take as many photographs as required to accurately record physical conditions at start of construction on either side of the pipeline and roadway.

3. Take additional photographs as required to record settlement or cracking of pavement and final conditions of all areas of excavation and wetlands.

E. Periodic Construction Photographs: Take photographs regularly as specified herein. Select vantage points to show status of construction and progress since last photographs were taken. Regularly submit bi-weekly for the duration of the project.

F. Required Construction Photographs: Provide photographs at the following stages of construction, at a minimum

1. Site before commencement of any construction

2. Site upon completion of site clearing

3. At completion of each structural excavation

4. At completion of each structural foundation

5. At completion of framing or forming for structures

6. At completion of enclosure or structures

7. At completion of pipeline section/ manway/ vault excavation

8. At completion of wetland restoration

9. At completion of non-wetland site restoration

10. At 1-month intervals, progress photograph during construction of facilities. Photos of any month need only show new work performed during month.

11. Special photographs as required by Engineer

12. Upon completion of all Contract work over-all site photography.

G. In addition to the professional photographs provided as specified in this Section, the General Contractor shall also take daily photographs documenting the progress of the work. Digital copies of the General Contractor's image files shall be provided as part of project closeout in a format acceptable to the Engineer and Owner.

3.02 CONTRACT CLOSEOUT:

A. Complete in accordance with Section 01700.

END OF SECTION

SECTION 01400

QUALITY ASSURANCE

PART 1 – GENERAL

1.01 DESCRIPTION:

A. This section covers Quality Assurance and Control requirements for this contract.

B. The Contractor is responsible for controlling the quality of work, including work of its subcontractors, and suppliers and for assuring the quality specified in the Technical Specifications is achieved.

C. Refer to the Article 6 of the Standard General Conditions - Contractor's Responsibilities, paragraphs 6.01, 6.02, and 6.03.

1.02 CONTRACTOR FURNISHED TESTING LABORATORY SERVICES:

A. An independent commercial testing laboratory acceptable to the Engineer shall perform all tests that require the services of a laboratory to determine compliance with the Contract Documents. The laboratory shall be staffed with experienced technicians, properly equipped, and fully qualified to perform the tests in accordance with the specified standards.

B. Preliminary Testing Services: The Contractor shall be responsible for all testing laboratory services in connection with concrete materials and mix designs, the design of asphalt mixtures, gradation tests for structural and embankment fills, backfill materials, and all other tests and engineering data required for the Engineer's review of materials and equipment proposed to be used in the Work. The Contractor shall obtain the Engineer's acceptance of the testing laboratory before having services performed and shall pay all costs for services.

C. The Contractor shall not retain any testing laboratory against which the Owner or the Engineer have reasonable objection, and if at any time during the construction process the services become unacceptable to the Owner, or the Engineer, either the Owner or the Engineer may direct in writing that such services be terminated. The request must be supported with evidence of improper testing or unreasonable delay. If the Engineer determines that sufficient cause exists, the Contractor shall terminate the services and engage a different testing laboratory.

D. Transmittal of Test Reports: Written reports of testing and engineering data furnished by the Contractor for the Engineer's review of materials and equipment proposed to be used in the Work shall be submitted as specified for Shop Drawings.

E. The Contractor's testing laboratory shall furnish four copies of a written report of each test performed by laboratory personnel within three days after each test is completed. Distribution shall be two copies of each test report to the Engineer's Representative, one copy to the Owner, and one copy for the Contractor.

1.03 OWNER FURNISHED TESTING AND INSPECTION SERVICES:

A. The Owner will employ the services of an independent testing agency to conduct the Program Of Structural Tests And Inspections as described in Section 01065 and perform all quality control tests of materials of construction in the field or in the laboratory during and after their incorporation in the Work. Field sampling and testing shall be performed in the general manner indicated in the specifications, with minimum interference with construction operations.

B. The Contractor shall furnish a construction schedule and a minimum of 48 hour notice of readiness for testing and inspection of the work. The Engineer shall determine the exact time and location of field sampling and testing, and may require such additional sampling and testing as necessary to determine that materials and equipment conform with data previously furnished by Contractor and with the Contract Documents.

C. The Contractor shall be responsible for scheduling the work to permit adequate time for testing and re-testing should test results not conform to the contract documents and coordination of sample pickups and delivery. Lack of testing or inspection which is attributable to insufficient notice by the Contractor or failure of the Contractor to cooperate, will be cause for rejection of the work.

D. The Contractor shall deliver materials in sufficient quantities to the Owner's testing agency as may be required. Laboratory testing shall be performed within a reasonable time, consistent with the specified standards.

E. The Contractor shall furnish material samples and cooperate in the field sampling and testing activities, interrupting the work when necessary. The Contractor shall furnish personnel, facilities, and access to assist in the sampling and testing activities.

1.04 QUALITY ASSURANCE:

A. Codes and Standards: Refer to Article 3 - Contract Documents: Intent, Amending, Reuse, paragraph 3.03 of the General Conditions.

B. Copies of applicable referenced standards are not included in the Contract Documents. Where copies of standards are needed by the Contractor for superintendence and quality control of the work, the Contractor shall obtain a copy or copies directly from the publication source and maintain at the jobsite, available to the Contractor's personnel, subcontractors, and Engineer

C. Quality of Materials: Unless otherwise specified, all materials and equipment furnished for permanent installation in the Work shall conform to applicable standards and specifications and shall be new, unused, and free from defects and imperfections, when installed or otherwise incorporated in the Work. The Contractor shall not use material and equipment for any purpose other than that intended or specified unless the Engineer authorizes such use.

D. Where so specified, products or workmanship shall also conform to the additional performance requirements included within the Contract Documents to establish a higher or more stringent standard or quality than that required by the referenced standard.

1.05 OFFSITE INSPECTION:

A. When the specifications require inspection of materials or equipment during the production, manufacturing, or fabricating process, or before shipment, such services shall be performed by the Owner's independent testing laboratory, or inspection organization acceptable to Engineer in conjunction with or by the Engineer.

B. The Contractor shall give appropriate written notice to the Engineer not less than 30 days before offsite inspection services are required, and shall provide for the producer, manufacturer, or fabricator to furnish safe access and proper facilities and to cooperate with inspecting personnel in the performance of their duties.

1.06 MATERIALS AND EQUIPMENT:

A. The Contractor shall maintain control over procurement sources to ensure that materials and equipment conform to specified requirements in the Contract Documents.

B. The Contractor shall comply with manufacturer's printed instructions regarding all facets of materials and/or equipment movement, storage, installation, testing, startup, and operation. Should circumstances occur where the contract documents are more stringent than the manufacturer's printed instructions, the Contractor shall comply with the specifications. In cases where the manufacturer's printed instructions are more stringent than the contract documents, the Contractor shall advise the Engineer of the disparity and conform to the manufacturer's printed instructions. In either case, the Contractor is to apply the more stringent specification or recommendation, unless approved otherwise by the Engineer.

1.07 SHOP AND FIELD TESTING:

A. The Contractor is responsible for providing advance notice of and access for the shop and field testing specified in the technical specification sections.

B. The Contractor and its Subcontractor shall permit inspections, tests, and other services as required by the Contract Documents.

C. Contractor shall provide twenty-one days written notice to the Engineer so that the Engineer may schedule and witness off site and on site tests. The Engineer's witnessing of tests does not relieve the Contractor and/or Subcontractors of their obligation to comply with the requirements of the Contract Documents.

1.08 MANUFACTURER'S FIELD SERVICES:

A. When specified in the technical specifications sections, the Contractor shall arrange for and provide technical representation from manufacturer's of respective equipment, items, or components. The manufacturer's representative shall be a factory trained service engineer/technician with the type and length of experience specified in the technical specifications.

B. Services Furnished Under This Contract: An experienced, competent, and authorized factory trained service engineer/technician representative of the manufacturer of each item of equipment for which field services are indicated in the specifications shall visit the site of the Work and inspect, operate, test, check, adjust if necessary, and approve the equipment installation. In each case, the manufacturer's service representative shall be present when the equipment is placed in operation. The manufacturer's service representative shall revisit the jobsite as often as necessary until all problems are corrected and the equipment installation and operation are satisfactory to the Engineer.

C. Refer to Section 01730 - Operations and Maintenance Data for additional requirements.

1.09 CERTIFICATION FORMS AND CERTIFICATES:

A. The Contractor shall be responsible for submitting the certification forms and certificates in conformance with the requirements specified in Section 01300 - Submittals.

PART 2 - PRODUCTS (NOT USED)

PART 3 – EXECUTION

3.01 QUALITY CONTROL:

A. Quality control is the responsibility of the Contractor, and the Contractor shall maintain control over construction and installation processes to assure compliance with specified requirements.

B. Certifications for personnel, procedures, and equipment associated with special processes (e.g., welding, cable splicing, instrument calibration, surveying) shall be maintained in

the Contractor's field office, available for inspection by the Engineer. Copies shall be made available to the Engineer upon request.

C. Means and methods of construction and installation processes are the responsibility of the Contractor, and at no time is it the intent of the Engineer to supersede or void that responsibility.

END OF SECTION

SECTION 01500

TEMPORARY FACILITIES

PART 1 - GENERAL

1.01 SCOPE OF WORK:

A. The Contractor shall provide all temporary facilities for the proper completion of the work, as required and as specified.

1.02 SANITARY REGULATIONS:

A. The Contractor shall provide adequate sanitary facilities for the use of those employed on the Work. Such facilities shall be made available when the first employees arrive on the site of the Work, shall be properly secluded from public observation, and shall be constructed and maintained during the progress of the Work in suitable numbers and at such points and in such manner as may be required.

B. The Contractor shall maintain the sanitary facilities in a satisfactory and sanitary condition at all times and shall enforce their use. He shall rigorously prohibit the committing of nuisances on the site of the Work, on the lands of the Owner, or on adjacent property.

C. The Contractor shall get approval of the location of sanitary facilities from the Engineer prior to placement to minimize risk of leakage.

D. The Contractor shall not use the Owner's sanitary facilities.

1.03 WATER SUPPLY:

A. The Contractor shall make arrangements and pay for all water necessary for completion of construction operations under this contract.

B. For all necessary operations at the site of the work the Contractor shall obtain water from an approved source, at his own expense via carboys and/or trailer. This includes potable water and any water required for construction, testing, cleaning.

C. The Contractor shall not contaminate the water supply and shall comply with all applicable regulations and code requirements.

1.04 TEMPORARY HEAT:

A. If temporary heat is required for the protection of the Work, the Contractor shall provide and install suitable heating apparatus, shall provide adequate and proper fuel, and shall maintain heat as required.

B. Temporary heating apparatus shall be installed and operated in such manner that finished work will not be damaged thereby. After the permanent heating system has been installed, tested, and made ready for operation, the Contractor may, at his own risk and expense, use it for providing heat for protection of the Work. He shall provide and pay for all fuel and care necessary, and, when the Work is ready for acceptance, he shall, at his own expense, put the system into first-class condition, even to the extent of replacing worn or damaged parts as directed.

1.05 ELECTRICAL ENERGY:

A. The site is located in a remote area. The Contractor shall make all necessary arrangements and pay all fees and charges for electrical energy for power and light necessary for the proper completion of the Work and during its entire progress. The Contractor shall provide and pay for all generators, fuel, temporary wiring, switches, connections, and meters.

B. The Contractor shall provide sufficient electric lighting so that all work may be done in a workmanlike manner when there is not sufficient daylight.

1.06 PRECAUTIONS DURING ADVERSE WEATHER:

A. During adverse weather and against the possibility thereof, the Contractor shall take all necessary precautions so that the Work may be properly done and satisfactory in all respects. When required, protection shall be provided by use of tarpaulins, wood and building-paper shelters, or other suitable means.

B. During cold weather, materials shall be preheated, if required, and the materials and adjacent structure into which they are to be incorporated shall be made and kept sufficiently warm so that a proper bond will take place and a proper curing, aging, or drying will result. Protected spaces shall be artificially heated by suitable means which will result in a moist or a dry atmosphere according to the particular requirements of the work being protected. Ingredients for concrete and mortar shall be sufficiently heated so that the mixture will be warm throughout when used.

1.07 CONTRACTOR'S FIELD OFFICE:

A. The Contractor shall maintain a temporary field trailer near the work for his own use during the period of construction at which readily accessible copies of all contract documents shall be kept. The trailer shall be located where it will not interfere with the

progress of the work. In charge of this office there shall be a competent superintendent of the Contractor as specified under "Supervision of Work" in the AGREEMENT.

1.08 OFFICE FOR ENGINEER:

A. Promptly after starting work at the site, the Contractor shall provide and equip a suitable office for the exclusive use of the Engineer, and the Contractor shall maintain this office thereafter until the completion of the work to be done under this contract. This office shall be a separate building located, as directed, where it will not interfere with the progress of the work. An approved, suitably constructed, and equipped trailer of adequate size and design for the purpose may be furnished as the Engineer's office. If a trailer is furnished, it shall have a minimum width of 12 feet, and a length as required to obtain the square footage specified below and an insulated floor. The office and furniture shall be relatively new and in good condition. The equipment, supplies, and services furnished shall be acceptable to the Engineer.

B. The Contractor shall furnish insurance coverage of adequate amount to replace not only the Contractor's equipment, but all property belonging to the Engineer and the Engineer's staff, at replacement cost.

C. The Office shall be of suitable height and of ample size to accommodate the furniture and equipment listed below, without crowding (at least 600 sq. ft. of floor area). It shall be weathertight and acceptably insulated and suitably ventilated; the floor shall be tight and of sufficient construction to withstand the loads imposed upon it. The office shall consist of two separate office spaces for the Owner’s field engineers and a third separate space for meetings/ conferences. Each office will have a door, with lock and key, and a minimum of two screened windows which can be both opened and locked shut. The office shall have two exterior doors, with cylinder locks and keys. The exterior doors shall also be provided with a hasp, for which the Engineer will furnish his own locks. The office shall contain separate and acceptable toilet facilities, to include a toilet, sink with hot and cold water, exhaust fan, and mirror. The Contractor shall make arrangements and pay all costs associated with tying the office sanitary system into an approved disposal system.

D. The Contractor shall furnish a parking area large enough to accommodate a minimum of four cars adjacent to the office, for the exclusive use of the Engineer.

E. The Contractor shall furnish the following furniture, equipment, supplies, and services:

1. One plan table or sloping plan shelf, about 3 ft. by 6 ft., with a reasonably smooth top, and one suitable swivel stool.

2. Eight additional folding chairs.

3. Shelves, tables, and bookcases as directed by the Engineer.

4. Electric lights, desk lamps and outlets as directed. The Contractor shall pay for installation and all charges for the energy used.

5. Broom and dustpan.

6. Two desks for general office use. Each about 3 ft. by 5 ft., all with a desk chair of the armchair swivel type.

7. Plan rack, as directed or approved by the Engineer.

8. Plan storage cabinet as approved by the Engineer.

9. Two four-drawer, legal size, metal filing cabinets each with locks. The Contractor shall furnish up to two additional filing cabinets if requested by the Engineer.

10. Coat rack and hooks

11. Provide telephone service to service voice grade lines with caller ID.

12. Provide a push button digital telephone for each of two desks.

13. Provide high speed internet access in the Engineer's field office for the Engineer's exclusive use. High speed internet access shall be capable of a minimum of 10 mbps upload and 100 mbps download speeds. High speed internet access for the Engineer's use shall be Cable, DSL, or T-1 type service.

14. Class ABC type fire extinguisher of at least 4-lb capacity.

15. Insulated waterproof chest for storage and moist curing of concrete cylinders; size and construction as directed with capability of maintaining required curing temp.

16. Supply of drinking water in a suitable dispenser, with hot and cold supply and refrigerator space.

17. Paper cups, paper towels, liquid soap, and toilet paper; each with suitable dispenser or holder.

18. A waste basket for each desk, and a supply of appropriately sized plastic trash bags.

19. Thermostatically controlled heating unit or system of adequate capacity to maintain a minimum temperature of not less than 68 deg. F. under all cold weather conditions. The Contractor shall provide all fuel used and service necessary.

18. Thermostatically controlled, refrigerant type, air conditioner of adequate capacity to maintain a maximum temperature of not more than 72 deg. F. under all hot weather conditions. The Contractor shall provide all service necessary and provide all power used.

19. Metal clothing locker, or closet, 36-in. wide by 18-in. deep by 72-in. high, minimum dimensions.

20. Metal storage cabinet 36-in. wide, by 18-in. deep by 72-in. high, with a minimum of five adjustable shelves, and a door lock.

21. The Contractor shall arrange for complete janitor service to be provided on a weekly basis.

22. One copying machine with supplies and service capable of scanning and faxing. Machine shall be capable of copying 8.5x11, 8.5x14 and 11x17 paper sizes. Copy rate shall be at least 20 copies per minute for 8.5x11 paper size.

23. Outdoor minimum-maximum thermometer with range of -40 deg. F to +120 deg. F and reset provisions.

~~A. The Engineer will continue to use the existing resident engineer field office, provided by the OWNER, at the site.~~

~~B. The Contractor shall furnish the following supplies, and services:~~

~~1. Supply of drinking water in a suitable dispenser, with hot and cold supply and refrigerator space.~~

~~Paper cups, paper towels, liquid soap, and toilet paper; each with suitable dispenser or holder.~~

~~24. Supply of coffee compatible with Keurig coffee maker.~~

1.09 TEMPORARY FENCING:

A. Provide commercial grade chain link fence to prevent trespass by workmen and suppliers onto private property and the public from construction site.

B. Provide 6 foot high fence around construction site. Equip fence with vehicular and pedestrian gates with locks.

C. Coordinate location of temporary fencing with Owner (Engineer).

1.10 OPERATION, TERMINATION, AND REMOVAL:

A. Supervision: Enforce strict discipline in use of temporary facilities. To minimize waste abuse, limit availability of temporary facilities to essential and intended uses.

B. Maintenance: Maintain facilities in good operating condition until removal.

1. Maintain operation of temporary enclosures, heating, cooling, humidity control, ventilation, and similar facilities on a 24-hour basis where required to achieve indicated results and to avoid possibility of damage.

C. Termination and Removal: Remove each temporary facility when need for its service has ended, when it has been replaced by authorized use of a permanent facility, or no later than Substantial Completion. Complete or, if necessary, restore permanent construction that may have been delayed because of interference with temporary facility. Repair damaged Work and clean exposed surfaces.

END OF SECTION

SECTION 01501

WEATHER PROTECTION STANDARD

PART 1 - GENERAL

1.01 DESCRIPTION

A. It is the intent of these standards to require the general contractor to provide temporary enclosures and heat to permit construction work to be carried on during the months of November through March in compliance with Chapter 497 of the Massachusetts General Laws of 1970. These standards are not to be construed as requiring enclosures or heat for operations that are economically infeasible to protect in the judgement of the awarding authority. Included in this category, without limitations, are such items as Site Work, Excavation, Pile Driving, Steel Erection, Erection of Certain Exterior Wall Panels, Roofing, and similar operations.

1.02 WEATHER PROTECTION

A. "Weather Protection" shall mean the temporary protection of that work adversely affected by moisture, wind and cold by covering, enclosing and/or heating. This protection shall provide adequate working areas during the months of November through March as determined by the awarding authority and consistent with the approved construction schedule to permit the continuous progress of all work necessary to maintain an orderly and efficient sequence of construction operations. The General Contractor shall furnish and install all "weather protection" material and be responsible for all costs, including heating required to maintain a minimum temperature of 40 deg. F. at the working surface. This provision does not supersede any specific requirements for methods of construction and/or curing of materials.

B. The General Contractor may, with the approval of the awarding authority, elect to utilize the permanent heating systems for temporary heat after the building is enclosed and after it has been tested and is ready to operate. However, it shall be his responsibility to have all portions of the permanent heating system that are used for heating during construction thoroughly cleaned and restored to first-class condition, to the satisfaction of the awarding authority.

C. Installation of weather protection and heating devices shall comply with all safety regulations including provisions for adequate ventilation and fire protection devices.

D. The General Contractor shall furnish and install Fahrenheit thermometers at places designated by the awarding authority in order to determine if specified temperatures are maintained.

E. Within 30 calendar days after his award of contract, the General Contractor shall submit in writing to the awarding authority for approval, three (3) copies of his proposed methods for "Weather Protection".

END OF SECTION

SECTION 01568

EROSION CONTROL, SEDIMENTATION, AND CONTAINMENT OF CONSTRUCTION MATERIALS

PART 1 – GENERAL

1.01 DESCRIPTION:

A. Provide all work and take all measures necessary to control soil erosion resulting from construction operations, minimize potential for flow of sediment from construction site, and contain construction materials (including excavation and backfill) within protected working area as to minimize potential damage to any stream or wetlands.

1.02 REFERENCE:

A. Refer tto Westfield Conservation Commission Order of Conditions and MassDEP Water Quality Requirements provided in Appendix B.

1.03 SUBMITTALS:

A. Eight weeks prior to the start of the work, submit to Engineer, for review and comment, a draft Stormwater Pollution Prevention Plan (SWPPP) with detailed information and drawings showing the proposed methods to be used for controlling erosion during construction.

B. Eight weeks prior to the start of the work, submit to the Engineer, for review and comment, a draft Notice of Intent (NOI) form, that will be submitted to US EPA and MassDEP at least 30 days prior to construction to request coverage under the NPDES General Construction Permit for stormwater discharges.

1.04 QUALITY ASSURANCE:

A. All work shall be performed in accordance with all applicable Federal, State, and Local regulations and permits associated with the project.

B. Sedimentation and erosion control best management practices shall be installed, at a minimum, as shown on drawings, and prior to the start of any clearing of vegetation or excavation of materials to protect waterbodies or wetlands in the vicinity of the project.

C. Additional erosion control shall be implemented as necessary in the event that the erosion and sedimentation control system as shown on the plans is not sufficient enough to protect erosion or sedimentation to nearby wetlands as a result of contractors' means and methods for restoration activities.

D. The sedimentation and erosion control system shall be maintained fully functional and shall not be removed until disturbed areas are stabilized by seeding, natural establishment or other means necessary as directed by the Engineer.

E. All stockpiled materials shall be located in designated upland portions of the site and shall not impact waterbodies and wetlands in the vicinity of the project. Sedimentation and erosion controls in the form of straw bales and silt fences shall be installed around the circumference of stockpiled materials.

F. Excavation or other construction activities shall be conducted under low-flow conditions and require acceptable procedures, including use of water diversion structures, diversion ditches, settling basins, and sediment traps. In the event flowing water is present during construction, a flow bypass will be used to direct the flow around the work area to avoid working in flow conditions.

G. Operations restricted to areas of work indicated on drawings and area which must be entered for construction of temporary or permanent facilities.

H. If construction materials are washed away during construction, remove materials from fouled areas.

I. Stabilize diversion outlets by means acceptable to Engineer.

J. Engineer has authority to limit surface area of erodible earth material exposed by clearing and grubbing, excavation, borrow and fill operations and to direct immediate permanent or temporary pollution control measures to prevent contamination of any stream or wetlands, including construction of temporary berms, dikes, dams, sediment basins, sediment traps, slope drains, and use of temporary mulches, mats, or other control devices or methods as necessary to control erosion.

PART 2 – PRODUCTS

2.01 BALES:

A. Straw or other suitable material acceptable to Engineer. Hay bales are not permitted. All bales should be weed-free.

B. Bales shall be properly bound with at least two length of twine or wire.

2.02 WOOD STAKES:

A. 2 in. by 2 in. by 3 ft.

2.03 SYNTHETIC FILTER FABRIC:

A. Synthetic filter fabric no less than 15 inches high to be a pervious sheet of propylene, nylon, polyester, or ethylene filaments and shall be certified by the manufacturer or supplier as conforming to the following requirements:

Physical Property	Requirements
Filtering Efficiency	75% (min.)
Tensile Strength at 20% (max.) Elongation	Extra Strength – 50 lbs./lin. in. (min.) Standard Strength – 30 lbs./lin. in. (min.)
Flow Rate	0.3 gal./sq. ft./min. (min.)

B. Burlap to be 10 ounce per square yard fabric.

C. Posts or stakes for filter fences either 2 x 2 or 2 x 3 or 2 x 4 inch studs or 0.5 pounds (minimum) per linear foot.

2.05 CATCH BASIN SEDIMENTATION CONTROL:

A. Provide and maintain siltsack, or equivalent product as approved by the Engineer, at each existing and newly installed catch basin throughout duration of construction.

2.06 DEWATERING SEDIMENTATION CONTROL

A. Provide and maintain siltsacks and sedimentation fitler bags, or equivalent products as approved by the Engineer, for all dewatering activities throughout duration of construction.

PART 3 – EXECUTION

3.01 GENERAL:

A. Do not discharge chemicals, fuels, lubricants, bitumen, raw sewage and other harmful waste into or alongside any body of water or into natural or man-made channels.

B. Soil and sedimentation control measures consisting of silt fence and straw bales approved by the Engineer shall be placed in areas as depicted on Drawings. Modifications to the location of perimeter filtering devices shall be approved by the Engineer. Filtering devices shall be installed prior to ground disturbance. Erosion and sediment controls to be placed surrounding the base of all deposits of stored and/or excavated materials and

topsoil.

C. During construction, Contractor shall inspect the erosion controls on a daily basis and shall remove accumulated sediment as needed. Contractor shall immediately control any erosion problems that occur at the site and shall also immediately notify Engineer, which reserves the right to require additional erosion and/or damage prevention controls they may deem necessary.

D. The Contractor is responsible for ensuring that erosion controls are inspected after every rainfall to ensure maximum control has been provided and to repair and replace them, as necessary. The Contractor shall also remove any sediments that accumulate at the erosion line and shall properly dispose of those sediments outside all jurisdictional areas.

E. To prevent erosion, soils exposed for periods greater than fourteen days shall be stabilized with erosion control blanket or netting, or a covering of mulch, or a temporary cover of rye or other grass. Any stabilization materials such as jute netting shall be firmly anchored to prevent them from being washed from slopes by rain or flooding. Preference should be given to biodegradable materials.

F. Following work in an area, disturbed ground shall be stabilized as soon as practicable. In areas of the site where construction activities have temporarily or permanently ceased, stabilization measures shall be initiated within 7 days. All sediment and erosion controls shall be maintained in proper functioning condition until all disturbed areas have been stabilized with final vegetative cover.

G. At no time shall sediments be allowed to flow into or accumulate in any wetland or resources area on or off the property.

3.02 INSTALLATION:

A. Install sediment and erosion controls in all locations as directed, surrounding base of all deposits of stored excavated material outside of disturbed area, and where directed by the Engineer.

B. Hold straw bales in place with two 2 in. by 2 in. by 3 ft. stakes so that each bale is butted tightly against adjoining bale thereby precluding shortcircuiting of erosion check.

C. Bales shall be entrenched to an excavated depth of at least four inches but no gerater than six inches.

D. Bales shall be placed no further than 12 inches from the down-gradient side of the silt fence barrier.

E. Utilize sedimentation filter bags for discharge of all silt-laden water from excavations so that only sediment-free water is returned to watercourses.

F. Do not place excavated soil material adjacent to water-course in a manner that will cause it to wash away by high water or runoff.

G. Minimize potential for damage to vegetation by excessive watering or silt accumulation in the discharge area.

H. Do not dump spoiled material into any streams, wetlands, surface waters, or unspecified locations.

I. Prevent indiscriminate, arbitrary, or capricious operation of equipment in streams, wetlands or surface waters.

J. Do not pump silt-laden water from trenches or excavations into surface waters, streams, wetlands, or natural or man-made channels leading thereto.

K. Minimize potential for damage to vegetation adjacent to or outside of construction area limits.

L. Do not dispose of trees, brush, debris, paints, chemicals, asphalt products, concrete curing compounds, fuels, lubricants, insecticides, washwater from concrete trucks or hydroseeders, or any other pollutant in streams, wetlands, surface waters, or natural or man-made channels leading thereto, or unspecified locations.

M. Do not alter flow line of any stream unless indicated or specified.

N. Stone riprap or any off-site product or substance shall not be placed within any wetland or waterbody. The use of geotextiles within any wetland or waterbody is also prohibited.

END OF SECTION

SECTION 01600

CONTROL OF MATERIALS

PART 1 - GENERAL

1.01 APPROVAL OF MATERIALS:

A. Unless otherwise specified, only new materials and equipment shall be incorporated in the work. All materials and equipment furnished by the Contractor shall be subject to the inspection and approval of the Engineer. No material shall be delivered to the work without prior approval of the Engineer.

B. As specified in Section 01300, the Contractor shall submit to the Engineer, data relating to materials and equipment he proposes to furnish for the work. Such data shall be in sufficient detail to enable the Engineer to identify the particular product and to form an opinion as to its conformity to the specifications.

C. Facilities and labor for handling and inspection of all materials and equipment shall be furnished by the Contractor. If the Engineer requires, either prior to beginning or during the progress of the work, the Contractor shall submit additional samples or materials for such special tests as may be necessary to demonstrate that they conform to the specifications. Such samples shall be furnished, stored, packed, and shipped as directed at the Contractor's expense. Except as otherwise noted, the Owner will make arrangements for and pay for the tests.

D. Any delay of approval resulting from the Contractor's failure to submit samples or data promptly shall not be used as a basis of a claim against the Owner or the Engineer.

E. In order to demonstrate the proficiency of workmen or to facilitate the choice among several textures, types, finishes, and surfaces, the Contractor shall provide such samples of workmanship or finish as may be required.

F. The materials and equipment used on the work shall correspond to the approved samples or other data.

1.02 SPARE PARTS:

A. Provide spare parts for Products as specified in the individual technical specification sections.

B. Pack spare parts to protect them during storage. Tag spare parts and containers to clearly identify them in accordance with Contractor’s parts numbering system as reviewed by the Engineer. All parts shall be cross-referenced to their applicable Specification Section.

C. Provide a list of all spare parts delivered to the site in an electronic format compatible with VUEWORKS®.

1.03 SPECIAL TOOLS:

A. For each type of equipment furnished, the Contractor shall provide a complete set of all special tools (including grease guns or other lubricating devices) which may be necessary for the adjustment, operation, maintenance, and disassembly of such equipment. Tools shall be high-grade, smooth, forged, alloy, tool steel. Grease guns shall be lever type.

B. Special tools are considered to be those tools which because of their limited use are not normally available, but which are necessary for the particular equipment.

C. Pack items to protect them during storage. Tag items and containers to clearly identify them in accordance with Contractor's part system, as reviewed by the Engineer. Cross-reference all items to their applicable Specification Section.

D. Special tools shall be delivered at the same time as the equipment to which they pertain. The Contractor shall properly store and safeguard such special tools until completion of the work, at which time they shall be delivered to the Owner.

E. As directed or permitted, the Contractor shall furnish and erect one or more steel wall cases with flat key locks and clips or hooks to hold each tool in arrangement.

1.04 NAMEPLATES:

A. With the exceptions mentioned below, each piece of equipment shall be provided with a nameplate of non-corrodible metal, securely fastened in place and clearly and permanently inscribed with the manufacturer's name, model or type designation, serial number, principal rated capacities, electrical or other power characteristics, and similar information as appropriate.

B. This requirement shall not apply to standard, manually operated hydrants or to gate, globe check and plug valves.

C. Each process valve shall be provided with a substantial tag of non-corrodible metal securely fastened in place and inscribed with an identification number in conformance with the Valve Identification Schedule indicated on the drawings or furnished later by the Engineer.

1.05 GENERAL MATERIAL AND EQUIPMENT REQUIREMENTS:

A. The requirements of this Paragraph shall constitute the standards for the material and equipment specified herein. Should these requirements conflict with the Supplier's recommendations or in any way be less stringent than the Supplier's requirements, they

shall be superseded by the Supplier's requirements.

B. Bolts, Anchor Rods and Nuts:

1. All necessary bolts, anchor rods, nuts, washers, plates and bolt sleeves shall be furnished by the contractor in accordance herewith. Anchor rods shall have suitable washers and hexagonal nuts.

2. All anchor rods, nuts, washers, plates, and bolt sleeves shall be galvanized unless otherwise indicated or specified.

3. Unless otherwise specified, stud, tap, and machine bolts, and nuts shall conform to the requirements of ASTM Standard Specification for Carbon Steel Externally and Internally Threaded Standard Fasteners, Designation A325. Hexagonal nuts of the same quality of metal as the bolts shall be used. All threads shall be clean cut and shall conform to ANSI Standard B1.1 for Unified Inch Screw Threads (UN and UNR Thread Form).

4. Bolts, anchor rods, nuts, and washers, specified to be galvanized, shall be zinc coated, after being threaded, by the hot-dip process in conformity with the ASTM Standard Specification for Zinc (Hot-Galvanized) Coatings on Products Fabricated from Rolled, Pressed, and Forged Steel Shapes, Plates, Bars, and Strip, Designation A123, or the ASTM Standard Specifications for Zinc Coating (Hot Dip) on Iron and Steel Hardware, Designation A153, as is appropriate.

5. Bolts, anchor rods, nuts, and washers specified to be stainless steel shall be Type 304 or Type 316 stainless steel, as indicated.

6. Anchor rods shall be set accurately. They shall be carefully held in suitable templates of acceptable design. Where indicated on the Drawings, specified, or required, anchor bolts shall be provided with square plates at least 4 in. by 4 in. by 3/8 in. or shall have square heads and washers and set in the concrete forms with suitable pipe sleeves, or both. If anchors are set after the concrete has been placed, all necessary drilling and grouting or caulking shall be done by the Contractor and care shall be taken not to damage the structure or finish by cracking, chipping, spalling, or otherwise during the drilling and caulking.

C. Grease Fittings:

1. Provide extension fittings and tubing on all grease fittings that are installed in an inaccessible location. The extension is to be located so that equipment can be lubricated from the operating level without the use of ladders, staging or shutting down the equipment. Tubing: 316 stainless steel.

D. Concrete Inserts For Hangers:

1. Concrete inserts for hangers shall be designed to support safely, in the concrete that is used, the maximum load that can be imposed by the hangers used in the inserts. Inserts for hangers shall be of a type which will permit adjustment of the hangers both horizontally (in one plane) and vertically and locking of the hanger head or nut. All inserts shall be galvanized by the hot-dip process in conformity with the ASTM Standard Specification for Zinc (Hot-Galvanized) Coatings on Products Fabricated from Rolled, Pressed, and Forged Steel Shapes, Plates, Bars, and Strip, Designation A123, or the ASTM Standard Specifications for Zinc Coating (Hot Dip) on Iron and Steel Hardware, Designation A153, as is appropriate.

E. Equipment Foundations, Installation and Grouting:

1. The Contractor shall furnish the necessary materials and construct suitable concrete foundations for all equipment installed by him, even though such foundations may not be indicated on the Drawings. The tops of foundations shall be at such elevations as will permit grouting as specified below.

2. All such equipment shall be installed by skilled mechanics and in accordance with the instructions of the manufacturer.

3. In setting pumps, motors, and other items of equipment customarily grouted, the Contractor shall make an allowance of at least 1 in. for grout under the equipment bases. Shims used to level and adjust the bases shall be steel. Shims may be left embedded in the grout; in which case they shall be installed neatly and so as to be as inconspicuous as possible in the completed work. Unless otherwise permitted, all grout shall be a suitable non-metallic, non-shrink grout.

4. Grout shall be mixed and placed in accordance with the recommendations of the manufacturer. Where practicable, the grout shall be placed through the grout holes in the base and worked outward and under the edges of the base and across the rough top of the concrete foundation to a peripheral form so constructed as to provide a suitable chamfer around the top edge of the finished foundation.

5. Where such procedure is impracticable, the method of placing grout shall be as approved by the Engineer. After the grout has hardened sufficiently, all forms, hoppers, and excess grout shall be removed, and all exposed grout surfaces shall be patched in an approved manner and given a burlap-rubbed finish.

F. Equipment Drive Guards:

1. All equipment driven by open shafts, belts, chains, or gears shall be provided with acceptable all-metal guards enclosing the drive mechanism. Guards shall be constructed of galvanized sheet steel or galvanized woven wire or expanded metal set in a frame of galvanized steel members. Guards shall be secured in position by steel braces or straps which will permit easy removal for servicing the equipment. The guards shall conform in all respects to all applicable safety codes and

regulations.

G. Sleeves:

1. Unless otherwise indicated on the drawings, or specified, form openings for the passage of pipes, conduits, and circular ducts through floors and walls using sleeves of standard weight, galvanized-steel pipe. Provide sleeves of ample diameter to pass the pipe and its insulation, if any, and to permit expansion as may occur. Provide sleeves that are flush at the walls and at the bottom of slabs and project 4 inches above the finished floor surface. Threaded nipples shall not be used as sleeves.

2. Sleeves in exterior walls below ground or in walls that have liquids on one or both sides, shall have a 2-inch annular fin of 1/8 in. plated welded with a continuous weld completely around the sleeve at mid-length. Galvanize sleeves after the fins are attached.

3. Sleeves shall be set accurately before the concrete is placed or shall be built in accurately as the masonry is being built.

H. Protection Against Electrolysis:

1. Where dissimilar metals are used in conjuction with each other, provide insulation between adjoining surfaces to eliminate direct contact and any resultant electrolysis. Provide bituminous insulation, heavy bituminous coatings, nonmettalic separators or washers, impregnated felt, or other means to provide insulation.

I. Lubricants:

1. During testing and prior to final completion, the Contractor shall furnish all lubricants recommended by the equipment manufacturer for the proper lubrication of all equipment furnished under this contract.

END OF SECTION

SECTION 01610

DELIVERY, STORAGE, AND HANDLING

PART 1 - GENERAL

1.01 GENERAL:

A. This Section specifies the general requirements for the delivery handling, storage and protection for all items required in the construction of the work. Specific requirements, if any, are specified with the related item.

1.02 TRANSPORTATION AND DELIVERY:

A. Transport and handle items in accordance with manufacturer's printed instructions.

B. Schedule delivery to reduce long term on-site storage prior to installation and/or operation. Under no circumstances shall equipment be delivered to the site more than one month prior to installation without written authorization from the Engineer.

C. Coordinate delivery with installation to ensure minimum holding time for items that are hazardous, flammable, easily damaged or sensitive to deterioration.

D. Deliver products to the site in manufacturer's original sealed containers or other packing systems, complete with instructions for handling, storing, unpacking, protecting, and installing.

E. All items delivered to the site shall be unloaded and placed/ stored within designated laydown areas shown on the drawings in a manner which will not hamper the Contractor's normal construction operation or those of subcontractors and other contractors and will not interfere with the flow of necessary traffic.

F. Provide equipment and personnel to unload all items delivered to the site.

G. Promptly inspect shipment to assure that products comply with requirements, quantities are correct, and items are undamaged. For items furnished by others (i.e., Owner, other Contractors), perform inspection in the presence of the Engineer. Notify Engineer verbally, and in writing, of any problems.

1.03 STORAGE AND PROTECTION:

A. It is the responsibility of the contractor to safely store and secure all materials delivered to the site.

B. Store and protect products and equipment in accordance with the manufacturer's instructions, with seals and labels intact and legible. Storage instruction shall be studied by the Contractor and reviewed with the Engineer by him. Instructions shall be carefully followed and a written record of this kept by the Contractor for each product and pieces of equipment.

C. Arrange storage of products and equipment to permit access for inspection. Periodically inspect to make sure products and equipment are undamaged and are maintained under specified conditions.

D. Provide protective maintenance during storage consisting of manually exercising equipment, inspecting mechanical surfaces for signs or corrosion or other damage, lubricating, applying any coatings as recommended by the equipment manufacturer necessary for its protection and all other precautions to assure proper protection of all equipment stored and for compliance with manufacturers' requirements related to warranties.

E. Store loose granular materials on solid flat surface in a well-drained area. Prevent mixing with foreign matter.

F. Cement and lime shall be stored under a roof and off the ground and shall be kept completely dry at all times. All structural, miscellaneous, and reinforcing steel shall be stored off the ground or otherwise to prevent accumulation of dirt or grease, and in a position to prevent accumulations of standing water and to minimize rusting. Beams shall be stored with the webs vertical. Precast concrete shall be handled and stored in a manner to prevent accumulations of dirt, standing water, staining, chipping, or cracking. Brick, block, and similar masonry products shall be handled and stored in manner to reduce breakage, cracking, and spalling to a minimum.

G. All mechanical and electrical equipment and instruments shall be covered with canvas and stored in a weathertight building to prevent injury. The building may be a temporary structure on the site or elsewhere, but it shall be satisfactory to the Engineer. Building shall be provided with adequate ventilation to prevent condensation. Maintain temperature and humidity within range required by manufacturer and to prevent condensation on the equipment being stored.

1. All equipment shall be stored fully lubricated with oil, grease and other lubricants unless otherwise instructed by the manufacturer.

2. Moving parts shall be rotated a minimum of once weekly to ensure proper lubrication and to avoid metal-to-metal "welding".

3. Upon installation of the equipment, the Contractor shall start the equipment, at least half load, once weekly for an adequate period of time to ensure that the equipment does not deteriorate from lack of use.

4. Lubricants shall be changed upon completion of installation and as frequently as required thereafter during the period between installation and acceptance. New lubricants shall be put into the equipment at the time of acceptance.

5. Prior to acceptance of the equipment, the Contractor shall have the manufacturer inspect the equipment and certify that its condition has not been detrimentally affected by the long storage period. Such certifications by the manufacturer shall be deemed to mean that the equipment is judged by the manufacturer to be in a condition equal to that of equipment that has been shipped, installed, tested and accepted in a minimum time period. As such, the manufacturer will guaranty the equipment equally in both instances. If such a certification is not given, the equipment shall be judged to be defective. It shall be removed and replaced at the Contractor's expense.

END OF SECTION

SECTION 01700

CONTRACT CLOSEOUT

PART 1 - GENERAL

1.01 SCOPE OF WORK:

A. This Section specifies administrative and procedural requirements for project closeout, including but not limited to:

1. Closeout procedures.

2. Final cleaning.

3. Adjusting.

1.02 RELATED WORK:

A. Submittals Section 01300

B. Construction Photographs Section 01380

C. As-Built Documents Section 01720

D. Operation and Maintenance Data are included in Section 01730

E. Warranties and Bonds are included in Section 01740

1.03 CLOSEOUT PROCEDURES:

A. Submit written certification that Contract Documents have been reviewed, Work has been inspected, and that Work is complete in accordance with Contract Documents and ready for Engineer's inspection.

B. Provide submittals to Engineer that are required by governing or other authorities.

C. At completion of Project, provide digital archive in format that is readable by common desktop software applications in format acceptable to Designated Representative. Provide data in locked format to prevent further changes. Project management software shall be as provided either one of the following software packages under their current published licensing agreements:

1. Sharepoint
2. Procore Technologies, Inc.

3. or equal

D. Submit final Application for Payment identifying total adjusted Contract Sum, previous payment, and sum remaining due.

1.04 FINAL CLEANING:

A. Complete the following cleaning operations before requesting inspection for Certification of Substantial Completion.

1. Remove labels that are not permanent labels.

2. Clean exposed exterior and interior hard-surfaced finishes to a dust-free condition, free of stains, films and similar foreign substances. Restore reflective surfaces to their original reflective condition. Leave concrete floors broom clean.

3. The installing Subcontractor shall wipe surface of mechanical and electrical equipment. Remove excess lubrication and other substances. Clean plumbing fixtures to a sanitary condition. Clean light fixtures and lamps.

4. Clean the site, including landscape development areas, of rubbish, litter and other foreign substances. Sweep paved areas broom clean; remove stains, spills and other foreign deposits. Rake grounds that are neither paved nor planted, to a smooth even-textured surface.

1.05 ADJUSTING:

A. Adjust operating products and equipment to ensure smooth and unhindered operation.

END OF SECTION

SECTION 01710

CLEANING UP

PART 1 - GENERAL

1.01 DESCRIPTION OF WORK:

A. During its progress, the work and the adjacent areas affected thereby shall be cleaned up and all rubbish, surplus materials, and unneeded construction equipment shall be removed, and all damage repaired so that the public and property owners will be inconvenienced as little as possible.

B. Where material or debris has washed or flowed into or been placed in existing watercourses, ditches, gutters, drains, pipes structures, work done under this contract, or elsewhere during the course of the Contractor's operations, such material or debris shall be entirely removed and satisfactorily disposed of during the progress of the work, and the ditches, channels, drains, pipes, structures, and work, etc., shall, upon completion of the work, be left in a clean and neat condition.

C. On or before the completion of the work, the Contractor shall, unless otherwise especially directed or permitted in writing, tear down and remove all temporary buildings and structures built by him; shall remove all temporary works, tools, and machinery or other construction equipment furnished by him; shall remove, acceptably disinfect, and cover all organic matter and material containing organic matter in, under, and around privies, houses, and other buildings used by him; shall remove all rubbish from any grounds which he has occupied; and shall leave the roads and all parts of the premises and adjacent property affected by his operations in a neat and satisfactory condition.

D. Upon completion of the work, the Contractor shall remove from the sites of the subsurface explorations all of his plant, machinery, tools, equipment, temporary work, and surplus materials; shall, unless otherwise directed or permitted in writing, remove all rubbish from any grounds which he has occupied; and shall leave the roads and all parts of the premises and adjacent property affected by his operations in a neat and satisfactory condition.

E. The Contractor shall thoroughly clean all materials and equipment installed by him and his sub-contractors, and on completion of the work shall deliver it undamaged and in fresh and new-appearing condition. All mechanical equipment shall be left fully charged with lubricant and ready for operation.

F. The Contractor shall restore or replace, when and as directed, any public or private property damaged by his work, equipment, or employees, to a condition at least equal to that existing immediately prior to the beginning of operations. To this end the Contractor shall do as required all necessary highway or driveway, walk, and landscaping work.

Suitable materials, equipment, and methods shall be used for such restoration. The restoration of existing property or structures shall be done as promptly as practicable as work progresses and shall not be left until the end of the contract period.

END OF SECTION

SECTION 01720

AS-BUILT DOCUMENTS

PART 1 - GENERAL

1.01 DESCRIPTION:

A. In addition to the requirements of the General Conditions, the Contractor shall maintain in good order "As-Built Documents", which shall be marked to record all changes during construction of the Work. As-Built Documents shall include Contract Drawings, Specifications, Addenda, approved Shop Drawings, Samples, Test Records, Change Orders, other modifications of Contract Documents, Field Orders, Sketches, Photographs, and any other information necessary for the proper documentation of the Work as installed.

B. "As-Built Drawings" shall be defined as marked Contract Drawings, sketches and other notes made by the Contractor to record changes to the Contract Documents during construction of the Work.

1.02 SUBMITTALS:

A. Within two weeks after Substantial Completion of the Contract, the Contractor shall deliver to the Engineer Two sets (color hard copies) of the As-Built Drawings.

B. Documentation of as-built drawing progress shall be submitted to the Engineer as substantiating data for progress payments . Refer to Section 01152-3.

PART 2 – PRODUCTS – NOT USED

PART 3 – EXECUTION

3.01 RECORDING:

A. The Contractor shall maintain current As-Built Documents at the Site. All field changes shall be recorded on the As-Built Documents within 24 hours of completion. The As-Built Documents may contain handwritten notes and sketches; however all modifications to printed documents shall be neat, clear, and legibly marked. Color markings may be used to record all variations made during construction of the Work.

1. The Contractor shall record the following: location/size/type of pipes, valves, tees, crosses, bends, offsets, reducers, corporations, sleeves, couplings, air valves, blow offs, anchors, thrust blocks, casings, meter pits, hydrants, services, caps, plugs, and other structures; distance/ location between fittings; location and type of restraint; direction of operation of valves (open right (RH) or open left (LH)); depth of cover

over piping, if other than typical (4.5 feet); and description of vertical or rolled bends and offsets. The Contractor shall provide detailed sketches of connections to the existing system showing components including tees, nipple lengths, sleeves, valves, anchors, etc.

2. The Contractor shall record the following information for newly installed or rehabilitated infrastructure: location/elevation/size/type of pipes, manholes, structures, area drains, lateral pipes, force mains, air release valves, cleanouts, valves, strainers and all type of fittings built as part of the project. The presence of rock, if encountered, and the presence of sheeting, if left-in-place, shall also be recorded.

3. The Contractor shell record the following information for pipeline repairs: location, pipe identification number, detailed sketch of completed pipe repair types and location and quantities, photographic evidence of completed repair, confined space entry logs.

B. For water As-Built Drawings, all valves, fittings, fire hydrants, blow offs, branches, and dead ends shall be located by measurement to a minimum of two fixed permanent objects. Measurements may be made to: the center of another gate box, the center of a manhole cover, hydrant operating nuts, corner of storm sewer curb inlets, perpendicular to curb face, or a utility pole.

C. Horizontal distances shall be measured and recorded to the nearest tenth of a foot. For sewer/storm As-Built Drawings, vertical elevations shall be measured and recorded to the nearest hundredth of a foot.

D. Abandoned infrastructure left-in-place shall be recorded for location, size, type, and method of abandonment. For sewer/storm infrastructure, elevation shall also be recorded.

E. Other underground utilities encountered during the construction of the Work shall be recorded for location, size, and type.

F. No part of the Work shall be permanently concealed until the required information has been recorded.

G. The Contractor shall make the As-Built Documents available at all times for inspection by the Engineer and/or Owner.

H. As-Built Documents shall not be used for any other purpose other than to record the Work and shall not be removed from the Contractor's office without Owner approval.

I. All measurements related to the construction of the Work shall be verified by a Land Surveyor licensed in the State of Connecticut. The measurements shall include all elevations, distances and ties captured during the construction of the Work.

END OF SECTION

SECTION 01730

OPERATION AND MAINTENANCE DATA

PART 1 - GENERAL

1.01 DESCRIPTION:

A. This section includes procedural requirements for compiling and submitting operation and maintenance data required to complete the project.

1.02 RELATED WORK:

A. Section 01300: Submittals

B. Section 01400: Quality Assurance

C. Section 01600: Control of Materials

D. Section 01700: Contract Closeout

E. Section 01740: Warranties and Bonds

1.03 OPERATING AND MAINTENANCE INSTRUCTIONS AND PARTS LISTS:

A. Where reference is made in the Detail Technical Specifications to operating and maintenance instructions and spare parts lists, the Contractor shall furnish for each piece of equipment six complete sets giving the information listed below.

1. The manual for each piece of equipment shall be a separate document with the following specific requirements:

a. Contents:

(1) Table of contents and index

(2) Brief description of each system and components

(3) Starting and stopping procedures

(4) Special operating instructions

(5) Routine maintenance procedures

(6) Clean and concise manufacturer's printed operating and maintenance instructions, adjustment, lubrication, and other maintenance of equipment including parts list, illustrations, and diagrams

(7) One copy of each wiring diagram

(8) One copy of each approved shop drawing and each Contractor's coordination and layout drawing

(9) List of spare parts, manufacturer's price, and recommended quantity

(10) Name, address, and telephone numbers of local service representatives

b. Material:

(1) Loose leaf on 60 pound, punched paper

(2) Holes reinforced with plastic cloth or metal

(3) Page size, 8-1/2-in. by 11-in.

(4) Diagrams, illustrations, and attached foldouts as required of original quality, reproduced by dry copy method

(5) Covers: oil, moisture, and wear resistant 9 X 12 size

c. Submittals to the Engineer:

(1) Submit two (2) draft copies of Operations and Maintenance Manuals, electronically, in PDF format, for review a minimum of four weeks prior to installation of the system components.

(2) Provide six (6) printed final copies following approval of O&M manuals. Manuals shall be in 3-ring binders with comprehensive index with sub-sections and dividers, and cover and spine indicating project name, facility, equipment, and date. O&M manuals shall include at a minimum: Approved shop drawing and submittal information, detailed parts lists, replacement numbers, service contact information, and warranty information.

B. Such instructions and parts lists shall be completely and neatly annotated so that only the specific equipment and features furnished are clearly indicated. References to other sizes and types or models of similar equipment shall be deleted or neatly lined out.

C. Such instructions and parts lists shall be delivered to the Engineer at the same time that the equipment to which they pertain is delivered to the site. Each submittal shall be

accompanied by a transmittal form identifying the information included. Each submittal shall be reviewed by the Engineer for compliance with the above requirements.

D. If a submittal is acceptable, all three preliminary copies will be retained by the Engineer and three additional copies shall be provided to the Engineer by the Contractor. If deficiencies are found, one copy will be retained by the Engineer and two copies with the deficiencies, noted, will be returned to the Contractor. The copy retained by the Engineer shall not count toward the six complete acceptable sets required herein.

E. At the Engineer's discretion, he may retain all four copies and request only supplemental information from the Contractor.

1.04 CONTENTS, EACH VOLUME:

A. Table of Contents: Provide title of Project, names, addresses, and telephone numbers of Engineer, subconsultants, and Contractor with name of responsible parties; schedule of products and systems, indexed to content of the volume.

B. For Each Product or System: List names, addresses and telephone number of Subcontractors and suppliers; including local source of supplies and replacement parts.

C. Product Data: Mark each sheet to clearly identify specific products and component parts, and data applicable to installation. Delete inapplicable information.

D. A list of all parts for the equipment with each part identified by a functional name, the part manufacturer's name, and a unique part number, (normally the part manufacturer's alpha-numeric desig-nation). A list of parts keyed by non-unique item numbers to a sectional drawing will not be adequate to fulfill this requirement.

E. All components of each system, e.g., pump motor, coupling, and drive, shall be combined in a single submittal with the above data provided for each component.

F. Drawings: Supplement product data to illustrate relations of component parts, and data applicable to installation. Delete inapplicable information.

G. Type Text: As required to supplement product data. Provide logical sequence of instructions for each procedure, incorporating manufacturer's printed instructions specified.

H. Warranties and Bonds are as specified in Section 01740.

1.05 MANUAL FOR MATERIALS AND FINISHES:

A. Building Products, Applied Materials, and Finishes: Include product data, with catalog number, size, composition, and color and texture designations. Provide information for re-ordering custom manufactured products.

B. Instructions for Care and Maintenance: Include manufacturer's printed recommendations for cleaning agents and methods, precautions against detrimental agents and methods, and recommended schedule for cleaning and maintenance.

C. Moisture Protection and Weather Exposed Products: Include product data listing, applicable reference standards, chemical composition, and details of installation. Provide printed recommendations for inspections, maintenance, and repair.

D. Additional Requirements: As specified in individual product specification sections.

E. Provide a listing in Table of Contents for design data, if provided by Contractor, with tabbed fly sheet and space for insertion of data.

1.06 MANUAL FOR EQUIPMENT AND SYSTEMS:

A. For each Item of Equipment and Each System provide the following:

1. Description of unit or system, and component parts. Identify function, normal operating characteristics, and limiting conditions. Include certified performance curves, with engineering data and tests, and complete nomenclature and commercial number of replaceable parts.

2. Panelboard Circuit Directories including electrical service characteristics, controls and communications, and color coded wiring diagrams as installed.

3. Operating Procedures: Include start-up, break-in, and routine normal operating instructions and sequences; regulation, control, stopping, shutdown, and emergency instructions; and summer, winter, and any special operating instructions.

4. Maintenance Requirements:

a. Route procedures and guide for troubleshooting; disassembly, repair, and reassembly instructions; and alignment, adjusting, balancing, and checking instructions.

b. Servicing and lubrication schedule, with list of lubricant type, frequency, and method of lubrication. Any components which do not require lubrication or any expendable components which are not normally serviced shall be clearly noted as such.

c. Manufacturer's printed operation and maintenance instructions.

d. Sequence of operation by controls manufacturer.

e. Original manufacturer's parts list, illustrations, assembly drawings, and diagrams required for maintenance.

f. Lubrication and maintenance schedules shall be similar to that specified in Section 01300.

5. Control diagrams by controls manufacturer as installed.

6. Contractor's coordination drawings, with color coded piping diagrams as installed.

7. Charts of valve tag numbers, with location and function of each valve, keyed to flow and control diagrams.

8. List of original manufacturer's spare parts, current prices, and recommended quantities to be maintained in storage.

9. Test and balancing reports as specified.

10. Additional Requirements: As specified in individual product specification section.

B. Provide a listing in Table of Contents for design data, if provided by Contractor, with tabbed fly sheet and space for insertion of data.

1.07 INSTRUCTION OF OWNER PERSONNEL:

A. Before final inspection, instruct Owner's designated personnel in operation, adjustment, and maintenance of products, equipment, and systems, at agreed upon times. Where specified in technical Specification Sections for specific equipment or systems, the Contractor shall have instructions video taped while they are being given to Owner's personnel. Video taping shall be performed by a person or organization experienced in the production of tapes and shall include the entire instruction session(s) and all questions and answers. Tapes shall become the property of the Owner.

B. Use operation and maintenance manuals as basis for instruction. Review contents of manual with personnel in detail to explain all aspects of operation and maintenance.

C. Prepare and insert additional data in Operations and Maintenance Manual when need for such data becomes apparent during instruction.

D. Provide a completed and filled-out Equipment Manufacturer’s Certificate of Installation, Testing and Instruction form attached to the end of this section.

1.08 SERVICES OF MANUFACTURER'S REPRESENTATIVE:

A. The Contractor shall arrange for a qualified service representative from each company manufacturing or supplying the following equipment the Energy Dissipation Valves, Basket Strainers, Butterfly Valves, Knife Gate Valves, Crane, Ultrasonic Flow Meter, and the air relief valves:

B. After installation of the listed equipment has been completed and the equipment is ready for operation, but before it is operated by others, the representative shall inspect, operate, test, and adjust the equipment. The inspection shall include but shall not be limited to, the following points as applicable:

1. Soundness (without cracked or otherwise damaged parts).

2. Completeness in all details, as specified.

3. Correctness of setting, alignment, and relative arrangement of various parts.

4. Adequacy and correctness of packing, sealing, and lubricants.

C. The operation, testing, and adjustment shall be as required to prove that the equipment is left in proper condition for satisfactory operation under the conditions specified.

D. On completion of his work, the manufacturer's or supplier's representative shall submit in triplicate to the Engineer a complete signed report of the result of his inspection, operation, adjustments, and tests. The report shall include detailed descriptions of the points inspected, tests and adjustments made, quantitative results obtained if such are specified, and suggestions for precautions to be taken to ensure proper maintenance. The report also shall include a Certificate of Compliance stating that the equipment conforms to the requirements of the Contract and is ready for permanent operation and that nothing in the installation will render the manufacturer's warranty null and void.

E. After the Engineer has reviewed the reports from the manufacturers' representatives, the Contractor shall make arrangements to have the manufacturers' representatives present when the field acceptance tests are made.

F. Refer and conform to the additional requirements specified in Section 01400.

PART 2 - PRODUCTS - (NOT USED)

PART 3 - EXECUTION - (NOT USED)

EQUIPMENT MANUFACTURER'S CERTIFICATE OF INSTALLATION, TESTING AND INSTRUCTION

Owner - _____
(fill in)

Project - _____
(fill in description)

Contract No. _____
(fill in)

M&E No. _____

EQUIPMENT SPECIFICATION SECTION_____

EQUIPMENT DESCRIPTION_____

I_____, Authorized representative of
(Print Name)

_____
(Print Manufacturer's Name)

hereby CERTIFY that _____
(Print equipment name and model with serial No.)

installed for the subject project (has) (have) been installed in a satisfactory manner, (has) (have) been satisfactorily tested, (is) (are) ready for operation, and that Owner assigned operating personnel have been suitably instructed in the operation, lubrication, and care of the unit(s) on

Date:_____ Time:_____

CERTIFIED BY:_____DATE:_____
(Signature of Manufacturer's Representative)

OWNER'S ACKNOWLEDGMENT OF MANUFACTURER'S INSTRUCTION

(I) (We) the undersigned, authorized representatives of the _____ and/or Plant Operating Personnel have received classroom and hands-on instruction on the operation, lubrication, and maintenance of the subject equipment and (am) (are) prepared to assume normal operational responsibility for the equipment:

_____ Date: _____

_____ Date: _____

_____ Date: _____

END OF SECTION

SECTION 01740

WARRANTIES AND BONDS

PART 1 - GENERAL

1.01 SCOPE OF WORK:

A. This Section specifies general administrative and procedural requirements for warranties and bonds required by the Contract Documents, including manufacturers standard warranties on products and special warranties.

1.02 RELATED WORK:

A. Refer to Conditions of Contract for the general requirements relating to warranties and bonds.

B. General closeout requirements are included in Section 01700 Project Closeout.

C. Specific requirements for warranties for the Work and products and installations that are specified to be warranted, are included in the individual Sections of Division 2 through 16.

D. Certifications and other commitments and agreements for continuing services to Owner are specified elsewhere in the Contract Documents.

1.03 SUBMITTALS:

A. Submit written warranties to the Owner prior to the date fixed by the Engineer for Substantial Completion. If the Certificate of Substantial Completion designates a commencement date for warranties other than the date of Substantial Completion for the Work, or a designated portion of the Work, submit written warranties upon request of the Owner.

B. When a designated portion of the Work is completed and occupied or used by the Owner, by separate agreement with the Contractor during the construction period, submit properly executed warranties to the Owner within fifteen days of completion of that designated portion of the Work.

C. When a special warranty is required to be executed by the Contractor, or the Contractor and a subcontractor, supplier, or manufacturer, prepare a written document that contains appropriate terms and identification, ready for execution by the required parties. Submit a draft to the Engineer for approval prior to final execution.

D. Refer to individual Sections of Divisions 2 through 16 for specific content requirements, and particular requirements for submittal of special warranties.

E. At Final Completion, compile two copies of each required warranty and bond properly executed by the Contractor, or by the Contractor, subcontractor, supplier, or manufacturer. Organize the warranty documents into an orderly sequence based on the table of contents of the Project Manual.

F. Bind warranties and bonds in heavy-duty, commercial quality, durable 3-ring vinyl covered loose-leaf binders, thickness as necessary to accommodate contents, and sized to receive 8-1/2-in. by 11-in. paper.

G. Table of Contents: Neatly typed, in the sequence of the Table of Contents of the Project Manual, with each item identified with the number and title of the specification Section in which specified, and the name of the product or work item.

H. Provide heavy paper dividers with celluloid covered tabs for each separate warranty. Mark the tab to identify the product or installation. Provide a typed description of the product or installation, including the name of the product, and the name, address and telephone number of the installer, supplier, and manufacturer.

I. Identify each binder on the front and the spine with the typed or printed title "WARRANTIES AND BONDS," the Project title or name, and the name, address, and telephone numbers of the Contractor and equipment supplier.

J. When operating and maintenance manuals are required for warranted construction, provide additional copies of each required warranty, as necessary, for inclusion in each required manual.

K. Schedule of Special Warranties

1. Final acceptance of work completed under these Specifications will be withheld until after the installation and field testing by the Engineer. The Contractor shall guarantee the products and workmanship against defects of any kind for a period of one year after final testing and acceptance.

1.04 WARRANTY REQUIREMENT:

A. Related Damages and Losses: When correcting warranted Work that has failed, remove and replace other Work that has been damaged as a result of such failure or that must be removed and replaced to provide access for correction of warranted Work.

B. Reinstatement of Warranty: When Work covered by a warranty has failed and been corrected by replacement or rebuilding, reinstate the warranty by written endorsement. The reinstated warranty shall be equal to the original warranty with an equitable adjustment for depreciation.

C. Replacement Cost: Upon determination that Work covered by a warranty has failed, replace or rebuild the Work to an acceptable condition complying with requirements of Contract Documents. The Contractor is responsible for the cost of replacing or rebuilding defective Work regardless of whether the Owner has benefited from use of the Work through a portion of its anticipated useful service life.

D. Owner's Recourse: Written warranties made to the Owner are in addition to implied warranties, and shall not limit the duties, obligations, rights, and remedies otherwise available under the law, nor shall warranty periods be interpreted as limitations on time in which the Owner can enforce such other duties, obligations, rights, or remedies.

E. Rejection of Warranties: The Owner reserves the right to reject warranties and to limit selections to products with warranties not in conflict with requirements of the Contract Documents.

F. The Owner reserves the right to refuse to accept Work for the Project where a special warranty, certification, or similar commitment is required on such Work or part of the Work, until evidence is presented that entities required to countersign such commitments are willing to do so.

G. Disclaimers and Limitations: Manufacturer's disclaimers and limitations on product warranties do not relieve the Contractor of the warranty on the Work that incorporates the products, nor does it relieve suppliers, manufacturers, and subcontractors required to countersign special warranties with the Contractor.

1.05 DEFINITION:

A. Standard Product Warranties are pre-printed written warranties published by individual manufacturers for particular products and are specifically endorsed by the manufacturer to the Owner.

B. Special Warranties are written warranties required by or incorporated in the Contract Documents, either to extend time limits provided by standard warranties or to provide greater rights for the Owner.

PART 2 - PRODUCTS - (NOT USED)

PART 3 - EXECUTION - (NOT USED)

END OF SECTION

SECTION 01801

FACILITY COMPLETION PLAN

PART 1 – GENERAL

1.01 SCOPE:

A. This section covers the requirements for preparing a Facility Completion Plan (also referred to as the Plan). The Plan shall incorporate all aspects of facility completion as indicated in this section and the following sections to ensure the facility operates properly and meets design intent and performance. The Facility shall be defined as the completed and restored 42-inch raw water conveyance pipeline and completed new Energy Dissipation Valve (EDV) Chamber.

1. 01400 Quality Assurance

2. 01802 Functional Completion Testing

3. 01803 Start-Up and Commissioning

4. 01804 Performance Testing

5. 01805 Training

1.02 COORDINATION:

A. The CONTRACTOR shall be responsible for preparing, coordinating, and executing the Plan. The CONTRACTOR shall use the resources of the equipment and process systems suppliers in this work, particularly for specific equipment and process systems as identified in the specifications.

1.03 SCHEDULE:

A. An initial draft of the Plan shall be submitted as indicated herein:

1. The Plan shall be completed and submitted by the CONTRACTOR as follows:

a. Draft Plan to the OWNER and Engineer for review no later than 60 calendar days prior to significant completion of the Work described within the Bid Documents.

b. The OWNER and Engineer will require 14 calendar days to review the submittal and return with any exceptions noted.

c. The Plan will be reviewed and processed for acceptance in accordance with Section 01300 - Submittals.

B. The CONTRACTOR shall incorporate the OWNER'S and Engineer's comments into the revised Plan within 14 days of receiving comments, and reissue the Plan to the OWNER and Engineer for final review. No startup or commissioning activities shall be started until the Plan is approved by the OWNER and Engineer.

C. The specifications referenced above define additional specific planning requirements for equipment, and process systems.

1. These specific requirements shall be completed and submitted by the CONTRACTOR with assistance of Subcontractors, equipment, or systems suppliers a minimum of 14 days prior to any scheduled start up activities.

2. The OWNER and Engineer will require a minimum of 10 days to review the specific plans. Specific plans may be submitted as the equipment is installed, consistent with maintaining overall facility activities sequencing specified herein.

3. Specific plans will be reviewed and processed for acceptance in accordance with Section 01300 - Submittals.

D. The CONTRACTOR shall schedule meetings with the Engineer to coordinate with the regularly scheduled monthly progress meetings, to review and coordinate activities required by the Plan.

1.04 STAFFING:

A. The CONTRACTOR shall provide dedicated field staff to support the Plan activities. Field staff shall include a construction Start up Manager who shall be responsible for day to day activities and act as the primary contact with the OWNER regarding Plan activities. CONTRACTOR shall also provide a facility start up and commissioning Manager who shall be responsible for the coordination of all facility testing and commissioning activities.

1. The Startup Manager shall have the necessary experience to fully understand all startup requirements and the authority to dedicate Contractor's resources as required to execute the Work.

2. The Startup Manager shall have the following minimum qualifications:

(1) Has provided startup services for water and wastewater facilities and conveyance facilities similar to those included in the Work.
(2) Startup Manager qualifications will be reviewed and processed for acceptance in accordance with Section 01300 - Submittals.

B. The CONTRACTOR shall include the OWNER's operating staff in performance testing activities as required by the referenced specifications.

1. The OWNER will make available operating staff as agreed by CONTRACTOR and OWNER as needed for the CONTRACTOR to operate supplied systems. The OWNER will make available operating stafff as agreed by CONTRACTOR to operate OWNER owned valves and controls. .

2. The CONTRACTOR shall request OWNER operating staff in writing 14 calendar days in advance.

3. The OWNER reserves the right to request rescheduling within 7 calendar days of proposed activity requiring OWNER staff due to other high priorities.

PART 2 – PRODUCTS

Not Used.

PART 3 – EXECUTION

3.01 FACILITY COMPLETION PLAN:

A. The Plan shall include the following items as a minimum:

1. Cover Sheet with facility identification, title, date, and other information as needed to properly identify the specific information for the facility.

2. Status and revisions sheet with appropriate dates and signature spaces to document the development and status of the document.

3. Table of Contents including Appendix.

4. Equipment and systems descriptions with anticipated break down for individual startup activities. This section will define the individual "packages" for start up activities for the equipment or process systems.

5. The Plan will cover each phase of startup where testing is required including, but not limited to the following:

a. Factory acceptance testing.

b. Manufacturer's installation inspection.

c. Mechanical/electrical functional testing.

d. PCCP Pipe Final Inspections

e. PCCP Pipe Filling

f. Functional and performance testing of the axial control valves and control systems.

g. Extended Performance Tests

6. Schedule of events for startup and other activities covered by the Plan. The schedule shall define dates for completing activities for equipment and systems. The schedule shall be the CONTRACTOR's best estimate of time sequence at the time of issue. The CONTRACTOR shall submit monthly updates if the schedule changes. The schedule shall follow the required sequencing as specified herein.

7. Sign-off sheets consisting of certification forms or completion reports required by the specifications.

8. Reports, test results, and other supporting data shall be collected by the CONTRACTOR for documentation of the specific details leading to the certification or completion.

3.02 SEQUENCE OF START UP ACTIVITIES:

A. Procedures found in Specifications 01802, 01803, and 01804 outline the sequence of facility Functional Completion Tests, Start up and Commissioning, and Performance Testing. Schedules shall be provided by the CONTRACTOR and approved by the ENGINEER.

B. Any variation deemed necessary by the CONTRACTOR shall be reviewed by the ENGINEER prior to changing the sequencing.

END OF SECTION

SECTION 01802

FUNCTIONAL COMPLETION TESTING

PART 1 – GENERAL

1.01 SCOPE:

A. This section covers the requirements for Functional Completion Testing (also referred as "Functional Acceptance Testing") of equipment and process systems to confirm that construction and installation has been completed in anticipation of initial start up of the equipment and process systems. Functional Completion Testing shall be completed for the work in accordance with this section and shall cover the completed and restored 42-inch raw water conveyance pipeline and completed new Energy Dissipation Valve (EDV) Chamber. Other requirements for functional completion testing are included in the following specifications:

1. 01400 Quality Assurance

2. 01801 Facility Completion Plan

3. 01803 Start-Up and Commissioning

4. 01804 Performance Testing

5. 01805 Training

B. The requirements of this section shall be satisfactorily completed prior to equipment or process systems Start Up and Commissioning.

C. Functional Completion Testing may be witnessed by the OWNER and/ or its' representative.

1.02 GENERAL:

A. Functional Completion Testing shall be completed as construction and installation of equipment is completed to demonstrate that equipment is ready for start up. Functional Completion Testing shall be done in a coordinated manner based on the Plan prepared by the CONTRACTOR. Functional Completion Testing procedures and documentation forms shall be developed by the CONTRACTOR during the facility completion plan phase of the work and submitted to the ENGINEER for review prior to commencing testing. Functional Testing shall be successfully completed prior to conducting Start-Up and Commissioning. The procedures for completing functional completion testing shall include a listing of items for Functional Completion Testing and anticipated dates for testing.

1. Failure to Meet Requirements: If any equipment or process systems do not meet Functional Completion Testing requirements, it shall be the responsibility of the CONTRACTOR and equipment suppliers to make the necessary corrections or replacements and repeat the test. The equipment and process systems shall not be started up or otherwise put into service until the Functional Completion Testing is completed as evidenced by a Functional Completion Testing completed certificate for the equipment or subsystem.

2. No Additional Costs for Modifications: Modifications and retesting of the equipment and process systems required to meet Functional Completion Testing requirements shall be provided at no additional cost to the OWNER.

PART 2 – PRODUCTS

Not used.

PART 3 - EXECUTION

3.01 FUNCTIONAL COMPLETION TESTING:

A. Testing shall be conducted in accordance with the accepted Plan using applicable standard techniques reviewed by the ENGINEER.

B. After each mechanical system is completely installed, the Contractor shall confirm proper installation according to these Contract Documents. Mechanical system functional completion testing shall include, but not be limited to the following system types:

1. Piping (buried and exposed).

2. HVAC systems.

3. Valves and Gates including Axial Control Valves.

4. Pumps, Motors, Cranes, and Drives

5. Basket Strainers

6. Combination Air/ Vacuum Release Valves

7. Cathodic Protection

8. Flow Meter

9. Pressure Reducing Valve

10. Instrumentation

11. X-ray Inspection of all field welds

12. Final LIDAR and CCTV Inspection of 42-Inch PCCP

C. After the complete installation of electrical systems (or portions thereof), the Contractor shall conduct all testing, including the independent electrical testing, as specified in Division 16, Electrical.

D. The CONTRACTOR shall develop standard data sheets to document Functional Completion Testing requirements have been met for all equipment and processes, as specified in Section 3.02. As equipment testing is completed, the appropriate data sheet shall be completed and signed by the responsible party and submitted to the ENGINEER for completion. Data values shall be stated in the units noted in the equipment specifications.

3.02 FUNCTIONAL COMPLETION TEST PLAN:

A. A detailed Functional Completion Test schedule and plan shall be prepared and submitted to the ENGINEER for review and comment at least 30 calendar days prior to the start of testing. The plan shall be prepared by the CONTRACTOR in conjunction with the equipment or subsystem supplier.

1. The Functional Completion Test Plan will be reviewed and processed for acceptance in accordance with Section 01300 - Submittals.

B. Functional Completion Test Plan shall include the following:

1. Schedule for testing.

2. List of equipment included in each test.

3. A marked-up set of process and instrumentation drawings (P&IDs) showing the interrelation of the equipment or process systems included for the tests. CONTRACTOR to submit loop drawings, loop check-off log sheet, Measurement and Control Instruments specification forms (ISA-TR20.00.01-2006 ISA-TR20.00.01), bench or factory calibration records, electrical drawings, control system enclosure drawings, equipment manuals, documented PLC programs (Rung functional comments, tag description and functional comments, main program and sub-routine header functional comments), and printed screen of HMI displays. Additional requirements for instrumentation and controls are defined in the individual equipment sections and Division 13.

4. Detailed procedures for testing including a list of items to be verified, test reading or check-off, and the expected outcome, and the proposed data sheets that will be used to collect this information. Testing shall verify equipment and process systems are in accordance with design specifications, and the equipment or process systems are installed properly and suitable for start up.

5. Electronic copy of Device and I/O list.

3.03 FUNCTIONAL COMPLETION TESTING (FCT) REQUIREMENTS:

A. The following are minimum testing requirements:

1. Mechanical requirements:

a. Equipment has not been damaged in transportation or installation.

b. Equipment is properly installed with no undo forces imposed from piping or supports.

c. Equipment is properly lubricated.

d. Equipment is free of overheating.

e. Equipment has no objectionable vibration.

f. Equipment produces no excessive noise.

g. Equipment functions without overloading.

h. Piping and other connections are completed.

i. No leaks at connections and support piping as evidenced by completion of static pressure testing.

j. No repair defects as evidenced by the completion of final LiDAR and CCTV inspection of the 42-inch PCCP.

2. Electrical and Instrumentation Requirements:

a. Verify completeness and accuracy of PLC I/O Hardware and Software test, loop drawings, loop check-off log sheet, Measurement and Control Instruments using specification forms (ISA-TR20.00.01-2006 ISA-TR20.00.01), bench or factory calibration records, site calibration records, electrical drawings, control system enclosure drawings, equipment manuals, documented PLC programs (Rung functional comments, tag description and functional comments, main program and subroutine header functional comments), and printed screen of HMI displays.

3.04 COORDINATION:

A. Where required by the equipment specifications, the CONTRACTOR shall furnish an authorized, competent representative of the equipment or process supplier to supervise and coordinate the Functional Completion Testing program. Instrument readings and other test data shall be tabulated by the CONTRACTOR.

B. Some equipment testing will require coordination with and connections to the existing operating facilities and equipment. CONTRACTOR shall coordinate all testing with OWNER'S operation personnel.

3.05 FUNCTIONAL COMPLETION TESTING:

A. General Requirements: Functional Completion Testing certification for equipment and process systems are required.

B. Witnessing: The Engineer, Owner, Construction Manager, shall witness all testing conducted during any phase of startup. Others, as necessary, shall be allowed to witness all testing conducted during startup.

C. Submittal Schedule: Tests certificates shall be submitted no later than 30 calendar days, after testing ends.

D. Information Submitted: The certifications shall include, but not be limited to, the following:

1. Certification by the preparer that he/she is the person responsible for the test data and that the data is authentic and accurate.

2. Certification by the equipment or process systems suppliers that the equipment or process systems are properly installed and suitable for start up.

3. Pertinent background information.

4. Test data including, but not be limited to, the following:

a. Equipment or process systems tested.

b. Test dates.

c. Test results.

d. Names of any witnesses for tests.

e. Any repairs, modifications, or corrections required to obtain acceptable test results.

f. Calibration sheet for instrumentation or devices used for testing but not part of Facility installation.

g. Copies of calibration records for Facility installed instrumentation.

h. Certification shall include signature and date spaces for Engineer to signify completion of the Functional Completion Testing for the equipment or process systems.

E. The Contractor shall keep on 24-hour local standby and provide all crews, materials, and equipment required to repair, replace adjust, balance, modify and provide other services as may be required to immediately correct all failures or malfunctions of any kind.

F. CONTRACTOR to submit copies of completion test for PLC hardware and software test, loop drawings, loop check-off log sheet, Measurement and Control Instruments using specification forms (ISA-TR20.00.01-2006 ISA-TR20.00.01), bench or factory calibration records, site calibration records, electrical drawings, control system enclosure drawings, equipment manuals, documented PLC programs (Rung functional comments, tag description and functional comments, main program and subroutine header functional comments), and printed screen of HMI displays.

END OF SECTION

SECTION 01803

START-UP AND COMMISSIONING

PART 1 – GENERAL

1.01 SCOPE:

A. This section covers the requirements for the Start-Up and Commissioning work required as a basis for completion of the project which is defined as the completed and restored 42-inch raw water conveyance pipeline and completed new Energy Dissipation Valve (EDV) Chamber. Other requirements for start-up and commissioning are included in the following specifications:

1. 01400 Quality Assurance

2. 01801 Facility Completion Plan

3. 01802 Functional Completion Testing

4. 01804 Performance Testing

5. 01805 Training

B. Start-Up and Commissioning shall be completed for all work and shall not be initiated until the requirements of Functional Completion Testing are completed for the equipment or process systems. CONTRACTOR shall provide a 14 day notice to the OWNER prior to Start-Up and Commissioning.

C. All associated Operations and Maintenance Manuals shall be approved prior to scheduling Commissioning.

D. Start-Up and Commissioning requirements included in this section shall be satisfactorily completed prior to beginning Performance Testing for equipment and process systems.

1.02 GENERAL:

A. Start-Up: Start-Up shall be defined as the operation of equipment or process systems using clean water, air, or other fluids as necessary to demonstrate the operation of the equipment or process systems with other equipment. Start-Up shall demonstrate that local and remote instrumentation and controls are functioning properly and communicate with local interfaces and plant control systems. Documentation of the above shall be submitted to the ENGINEER for review and acceptance prior to Commissioning.

B. Commissioning: Commissioning is defined as the operation of equipment or process systems using process liquids, Facility support equipment, and utilities to demonstrate that equipment or process systems are capable of processing raw water at specified flows and conditions for a sustained period of operation as required by this section or equipment or process systems specifications. Successful Commissioning shall determine that the equipment or process systems are ready to begin Performance Testing.

C. Witnessing: The Engineer, Owner, Construction Manager, shall witness all testing conducted during any phases of Startup and Commissioning. Others, as necessary, shall be allowed to witness all testing conducted during Commissioning.

D. Commissioning shall be used by the CONTRACTOR and equipment or process suppliers to adjust, calibrate, fine tune, modify or otherwise prepare the equipment or system for continuous operation and Performance Testing.

1. Equipment shall only be operated by, or with the guidance of, qualified personnel having the knowledge and experience necessary to obtain proper operation and results.
2. All required adjustments, tests, operation checks, and other Start-Up and Commissioning activities shall be provided by qualified personnel.
3. Qualifications of personnel proposed for Start-Up and Commissioning shall be reviewed and approved by the Engineer.

E. CONTRACTOR shall be responsible for planning, supervising, and executing the Start-Up and Commissioning of the equipment and process systems with the assistance of equipment or process systems suppliers, and coordination with OWNER'S operating personnel.

1.03 STAFFING:

A. The CONTRACTOR shall be responsible for Start-Up and Commissioning under the direction of its Start-Up Manager. The OWNER's operation and maintenance staff shall be allowed to observe for the purposes of familiarization and training. Engineer and additional witnesses shall be allowed to be present to represent the OWNER.

1.04 FAILURE TO MEET REQUIREMENTS:

A. For equipment or process systems that do not meet Start-Up and Commissioning requirements, it shall be the responsibility of the CONTRACTOR and/or equipment or process systems suppliers to make the necessary corrections or replacements and repeat Start-Up and Commissioning. The CONTRACTOR shall not begin Commissioning until Start-Up is completed.

B. The equipment or process systems shall not be Performance Tested or otherwise placed in service until the Start-Up and Commissioning are completed as evidenced by a Start-Up and Commissioning certificate for the equipment or process systems.

PART 2 – PRODUCTS

Not used.

PART 3 - EXECUTION

3.01 GENERAL:

A. Start-Up shall begin at the conclusion of Functional Completion Testing. Start-Up activities shall be carried out with raw water, as required to show that the equipment and process systems are functional.

B. Filling of the 42-inch PCCP line cannot be done until Functional Completion Testing of the components in EDV Chamber is completed.

C. Filling of the 42-inch PCCP line cannot be done until results of the LIDAR and CCTV Inspection, conducted as part of the Functional Completion Test, have been received and approved by the Engineer.

D. Start-up and Commissioning of the EDV Chamber shall not begin until the 42-inch pipeline repairs have been tested and inspected, the 42-inch steel pipeline and fittings have been tested, and the pipeline has been filled with raw water. No flow tests shall be started until approved by the ENGINEER.

NOTE: Pipeline filling procedures, equipment start-up sequencing, and commissioning sequencing will be prepared by the ENGINEER prior to the commencement of Functional Completion Testing.

E. On successful completion of pipeline filling, equipment and pipe testing, and start-up, process flows shall be simulated for commissioning the equipment and process systems to show the equipment and process systems function properly. Commissioning shall confirm the proper operation of the equipment and process systems with process fluids, adjustments shall be made, and the equipment or process systems shall be optimized in preparation for Performance Testing.

F. The Commissioning of the EDVs is expected to include, but not be limited to:
   1. Actuating each EDV from closed to 100% open under local manual control and remote control
   2. Calibration of flow through each EDV
   3. Verification of valve position signal and demonstration of the desired valve position without excessive hunting

G. Commissioning shall conclude with the performance of In-line Free-Swimming Leak Detection & Air Pocket Detection in accordance with Specification Section 02616.

   a. Performance of In-Line Free Swimming Leak Detection cannot be conducted without approval of the Engineer and successful Commissioning of the EDV Chamber

H. The various vendors, equipment suppliers and manufacturers shall provide on-site supervision and assistance for Start-Up and commissioning services for the new facility.

I. The Contractor shall keep on 24-hour local standby and provide all crews, materials, and equipment required to repair, replace adjust, balance, modify and provide other services as may be required to immediately correct all failures or malfunctions of any kind.

3.02 PLANNING AND COORDINATION OF ACTIVITIES:

A. The CONTRACTOR shall coordinate all Start-Up and Commissioning activities for equipment and process. The CONTRACTOR shall develop a detailed Start-Up and Commissioning plan that includes the following as a minimum:

1. Description of the overall, general Start-Up and Commissioning process.

2. List of equipment and process systems included for Start-Up and Commissioning activities.

3. Detailed Start-Up and Commissioning sequence of activities.

4. Equipment and system boundaries as shown using marked P&IDs.

5. Listing of staff and manufacturer's representatives responsibilities for activities.

6. Loop diagrams produced for Functional Completion Testing accurately depicting the installed condition of instrumentation and controls.

7. Listing of required witnesses (Owner, Engineer…etc)

3.03 START UP AND COMMISSIONING REQUIREMENTS:

A. The following are minimum requirements for completion of Start-Up and Commissioning activities:

1. All associated Operations and Maintenance Manuals shall be approved prior to scheduling Start-Up and Commissioning.

2. Start-Up shall show that the equipment or process systems are suitable for continuous operation using raw water and that the flows and operating parameters are in compliance with specified design conditions. Start-Up shall also demonstrate that local and remote instrumentation and controls are functioning properly and communicating with each other.

3. Commissioning shall show that the equipment and process systems are capable of continuous operation using raw water and utilities; and that the flows, operating parameters and performance requirements have been demonstrated for a minimum

of 8 hours of continuous operation, or the period as required by the equipment specifications.

4. Commissioning shall conclude with the performance of In-line Free-Swimming Leak Detection & Air Pocket Detection in accordance with Specification Section 02616.

    a. Any significant issues or problems identified by the Free-Swimming Leak Detection inspection, as determined by the Engineer, may require the need to drain the pipe in order to correct the identified defect. Such conditions must be corrected before Performance Testing can proceed and may require repeating some or all Start-Up and Commissioning procedures.

3.04 DOCUMENTATION REQUIREMENTS:

A. CONTRACTOR shall submit all documentation for the ENGINEER'S review and approval.

1. Start-Up Documentation:

    a. Documentation that allinstrumentation for the equipment or process systems shall function as intended with correct indications at both local interfaces and the Plant Control System.

    b. Loop Functional Acceptance test shall be complete and accurate documentation (AS-BUILT status) that demonstrates local and remote instrumentation and controls are functioning properly and communication with local interfaces and plant control systems properly. Results of Loop Functional Acceptance Test shall be provided to owner prior to commissioning.

2. Commissioning Documentation: CONTRACTOR shall prepare and submit all documentation for the ENGINEER'S review. The reports shall include, but not be limited to, the following:

    a. Certification by the preparer that he/she is the person responsible for the data, and that the data is authentic and accurate.

    b. Certification by the CONTRACTOR or equipment or process systems supplier that the equipment or the process systems are suitable for Performance Testing.

    c. Pertinent background information shall include, but not be limited to, the following:

        (1) Equipment or process systems Started-Up and Commissioned.

        (2) Start-Up and Commissioning dates.

(3) Items or performance criteria tested clearly showing requirements and field data that verify requirements where met.

(4) Names of witnesses and affiliations for Start-Up and Commissioning.

(5) Any repairs, corrections, or modifications required for the equipment or process systems to successfully complete Start-Up and Commissioning.

(6) Loop diagrams accurately depicting the installed condition of instrumentation and controls.

(7) Any other important background information including dates, times and locations.

3. Appendix

a. A summary of all data used in the calculations, including source, formulas with all terms defined.

b. Calculations for all data submitted, fully defined.

c. Copies of all raw field data sheets, including those indicating sampling point locations, and notes.

d. Production and/or operational data.

e. Calibration procedures and work sheets for sampling equipment.

f. Copies of calibration records for instrumentation.

g. PLC ladder logic documented with comments.

END OF SECTION

SECTION 01804

PERFORMANCE TESTING

PART 1 - GENERAL

1.01 SCOPE:

A. This section specifies requirements for Performance Testing. Performance Testing is a part of the overall completion testing requirement. Related work is included in the following specifications:

1. 01400 Quality Assurance

2. 01801 Facility Completion Plan

3. 01802 Functional Completion Testing

4. 01803 Start Up and Commissioning

5. 01805 Training

B. Performance Testing shall not commence for equipment or process systems until requirements for Start Up and Commissioning are completed and certified.

C. Performance Testing shall demonstrate the ability of the Facility to provide raw water to the water treatment plant within the specified flow conditions that represent startup, shutdown, failures, bypass, alarm conditions, and failure resets as defined within these Design Documents.

D. At the completion of Performance Testing and Training, the Contractor shall turn control of the Facility over to the Owner and provide support to the Owner during a 30 day Extended Operational Test Run to demonstrate that all portions of the facility operate continuously as intended. This requirement is in addition to the 1 year warranty period.

1.02 GENERAL:

A. Performance Testing shall be completed for the Facility, defined as the completed and restored 42-inch raw water conveyance pipeline and completed new Energy Dissipation Valve (EDV) Chamber, to confirm that the Facility meets the performance criteria specified within these Design documents.

1. A Perfomance Testing Plan shall be prepared by the CONTRACTOR, and submitted to the ENGINEER and OWNER for review and

approval. Plan shall be submitted 30 calendar days prior to commencement of Performance Testing.

2. Performance Testing shall be performed to demonstrate the specified throughput of the equipment and process systems or process systems performance requirements and guarantees.

3. The information collected shall be used as part of the basis for determining acceptability of the equipment or process systems to meet performance requirements.

B. Testing Requirements: Testing requirements for Performance Testing shall include but not be limited to the flow and control requirements specified within the Control Specification Section 13310B. These testing requirements represent startup, shutdown, failures, bypass, alarm conditions, and failure resets.

C. Test Failure: If any of the equipment or process systems fail to meet the specified requirements, it shall be the responsibility of the CONTRACTOR to make the necessary corrections or replacements and repeat the test. This procedure shall be followed until all equipment meets the guaranteed performance requirements.

1. Modifications shall be provided, and all retesting shall be performed at no additional costs to the OWNER. This includes payment of all engineering, consulting, and independent testing organization fees and expenses associated with observation of and performance of the retests.

2. Corrective work resulting from failed performance shall be immediately scheduled and work shall commence within one week unless it can be demonstrated that this is impractical. In that case, the CONTRACTOR shall request in writing an extension of time indicating the date the corrective work will begin.

PART 2 – PRODUCTS

Not used.

PART 3 - EXECUTION

3.01 SEQUENCE OF PERFORMANCE TESTING:

A. Performance Testing shall be performed only after Start Up and Commissioning are completed, including the performance of In-Line Free Swimming Leak Detection of the 42-Inch PCCP.

B. Performance testing shall be completed within 14 days of completion of Functional Completion Testing , unless otherwise specified for equipment or

processes or if significant repairs/ replacements are required as a result of previous testing

C. At the completion of Performance Testing and Training, the Contractor shall provide support to the Owner during a 30 day Extended Operational Test Run to demonstrate that all portions of the facility operate continuously as intended.

3.02 TESTING:

A. Performance Testing shall be conducted in accordance with applicable industry standard techniques and special procedures provided by the Engineer. Local and remote on-site instrumentation equipment may be used where it is determined to be sufficient to obtain necessary data for performance evaluation. Where local instrumentation is available, manual logging of the data shall be done in conjunction with the instrumentation readings to verify remote instrumentation readings.

B. All data values shall be reported both as "measured" and corrected as required by the performance or regulations. Data values shall be stated in the units noted for guaranteed performance.

C. Performance Testing shall be witnessed by the OWNER, ENGINEER, and regulatory agency representatives (if required).

D. Testing of the facility shall simulate flow variation and control that represent startup, shutdown, failures, bypass conditions, alarms conditions, and failure resets.

E. At the completion of Performance Testing and Training, the Contractor shall return Facility operations to the Owner.

F. At the completion of Performance Testing and Training, the Contractor shall provide support during during a 30 day Extended Operational Run to demonstrate that all portions of the facility operate as intended.

1. The Extended Operational Test Run shall be continuous. The cause of the interruption or increase or decrease in flow rate or performance of any part of the Facility shall be established and if corrective measures are necessary, the work shall be done immediately.

2. The Contractor shall provide support to the Owner, as needed, remotely and on-site during the Extended Operational Test Run. The Contractor shall keep on 24-hour local standby and provide all crews, materials, and equipment required to repair, replace adjust, balance, modify and provide other services as may be required to immediately correct all failures or malfunctions of any kind

3. The determination as to whether the Extended Operational Run is valid or must be rerun shall be made by the Engineer. This will be determined by the nature of the correction and its relation to the established normal operation criteria.

3.03 PERFORMANCE TEST PLAN:

A. As part of the Plan described in Section 01801 - Facility Completion Plan, a detailed Performance Test Plan shall be prepared and submitted to the OWNER at least 30 days prior to testing. The Performance Test plan shall be prepared by the CONTRACTOR in conjunction with the equipment or process systems suppliers. The Performance Test plan shall include the following:

1. Time schedule of events showing compliance with time requirements.

2. Instrument readings required and frequency of readings.

3. Set point adjustments to be made during the test period.

4. Step by step procedures for conducting testing.

5. Task assignments for data collection and how data will be assembled.

6. Sample data collection sheets and instructions where readings will be taken.

7. Sample calculations to indicate how the data will be prepared to arrive at the final results.

8. The experience resume of the equipment or process systems supplier representative who will be coordinating the testing.

9. Certification template

3.04 TEST SCHEDULE:

A. Performance Tests shall be scheduled within 14 days of successfully completed Functional Testing, given all instruments have been properly calibrated and that all controls are in satisfactory operating condition and all corrective actions have been implemented.

B. Performance Tests shall be performed on a schedule satisfactory to the OWNER. Tests shall follow the general order and timing outlined in the Plan.

C. The Plan shall clearly identify milestones and notices to the Engineer.

3.05 TEST COORDINATION:

A. CONTRACTOR: The CONTRACTOR shall coordinate with the OWNER regarding discharge of test flows to the existing Sedimentation Basin. Water levels in the basin shall be closely monitored once per hour for the duration of Performance Testing to ensure that levels do not exceed OWNER'S limits.

B. CONTRACTOR: Where required, the CONTRACTOR shall furnish authorized competent representatives of the equipment or process systems suppliers to attend and coordinate the test program. Test coordinator scope of services shall include preliminary instructions and orientation of CONTRACTOR's personnel prior to the actual test, instructions throughout the test period, recommended variations, if required, to assure validity of the test, and post test instructions for system shutdown or continued operation as required by the OWNER. Instrument readings and other test data shall be tabulated by the CONTRACTOR. Data sheet copies shall be submitted to the OWNER for review and analysis at the end of each testing day.

C. CONTRACTOR Coordination: The CONTRACTOR will work closely with the equipment or process systems supplier to aid in coordination of required system functions involving systems not furnished by the supplier of the equipment or process systems being tested. This shall include but is not limited to equipment, utilities, and support processes.

D. Witnesses: All tests shall be coordinated to ensure that the OWNER, ENGINEER, and Representatives may be present for all testing.

3.06 RESPONSIBILITIES:

A. CONTRACTOR shall be responsible for Performance Testing. These assignments shall be detailed and assigned as part of the Performance Test plan.

1. Logging of Operations: Except as specified in other sections, manual logging of operations parameters shall be the responsibility of the CONTRACTOR, equipment, or process systems supplier.

2. Equipment Operation: The CONTRACTOR shall be responsible for operating the equipment or process systems and providing oversight of OWNER'S operation of equipment or process systems, during performance testing.

B. OWNER'S operating personnel shall be responsible for operating existing SWSC-owned equipment during performance testing.

3.09 REPORTS:

A. General Requirements: Reports are required for all tests specified in the individual specifications for equipment and process. Four (4) copies of preliminary test reports shall be supplied to the OWNER for review and return with any exceptions noted.

B. Report Submittal Schedule: Test reports shall be submitted no later than 14 calendar days after testing ends, unless otherwise required by these specifications and the regulatory agency having jurisdiction.

C. Information Submitted: The reports shall include, but not be limited to, the following:

1. Cover: Including name and location of the plant, the equipment or process systems tested, name and address of the testing organization, and dates of the test.

2. Certification: A page including a certification by the report preparer that he/she is the person responsible for the test data, and one by the CONTRACTOR or equipment or process systems certifying authenticity and accuracy of the report.

3. Table of Contents.

4. Introduction: Pertinent background information shall be presented in this Section. The information shall include, but not be limited to, the following:

a. Equipment orprocess systems tested.

b. Test purpose.

c. Name and address of supplier and testing organization.

d. Test dates.

e. Items or performance criteria tested.

f. Names of persons present for test.

g. Any other important background information.

h. Photos

5. Summary: A comprehensive summary of the test results with sufficient information and data necessary to evaluate the process with respect to the applicable performance specifications. This information shall include, but not be limited to, the following:

a. A summary of the test results.

b. Process and operation data or parameters that can be used to verify operation at performance criteria.

c. Discussion of errors, both real and apparent, in the test.

6. Operation: Facility Operation during Testing shall contain:

a. Presentation of the process data for the test, with calculations where necessary. Calculations may be included in the Appendix.

b. Process and control equipment flow diagram.

7. Appendix:

a. A summary of all data used in the calculations, including source, formulas with all terms defined.

b. Calculations for all data submitted, fully defined.

c. Copies of all raw field data sheets, including those indicating sampling point locations, and notes.

d. Laboratory report, complete with analytical data sheets and chain of custody list.

e. Production and/or operational data.

f. Calibration procedures and work sheets for sampling equipment.

g. Copies of calibration records for instrumentation.

h. Pertinent correspondence concerning the test.

i. Any other information necessary to assist the OWNER in making a determination of compliance with the contract documents or to assist the Agency in making a determination of compliance with Federal, State, and Local regulations.

END OF SECTION

SECTION 01805

TRAINING

PART 1 – GENERAL

1.01 SCOPE:

A. This section specifies requirements for training of the OWNER's operating and maintenance staff. Training is a part of the overall completion testing requirement. Other requirements for training are included in the following specifications:

1. 01801 Facility Completion Plan

2. 01802 Functional Completion Testing

3. 01803 Start Up and Commissioning

4. 01804 Performance Testing

1.02 GENERAL:

A. Training shall be completed to train the OWNER's operating and maintenance staff in the proper operation and maintenance of the facilities.

1. Owner's Staff: The OWNER will provide the CONTRACTOR a list of all operations and maintenance staff requiring training, and their availability for training. The Owner operates three shifts per day.

2. Contractor Responsibilities: The CONTRACTOR shall be responsible for providing training of the OWNER's operation and maintenance staff. The training shall include both classroom and hands-on operation and maintenance training. Training shall be conducted with the assistance of the equipment and process systems suppliers using the Operations and Maintenance Manuals prepared for the facilities. The intent of training is to provide the operators and maintenance staff skills sufficient to fully operate and maintain the facilities. The Contractor shall provide two sessions of each training module for all three shifts.

3. Equipment and Process System Supplier Responsibilities: The CONTRACTOR shall be responsible for providing and arranging the training required by subcontractors and individual equipment and process systems suppliers. Training shall be as specified herein and in the individual equipment technical specifications. The equipment and process systems

training requirements are separate from and in addition to Operations and Maintenance Training described in paragraph 3-1.

4. Use of Owner's Facilities for Training: The OWNER has available facilities at the plant for use to conduct training sessions. The CONTRACTOR may use the facilities with proper notice to the OWNER. Scheduling requests must include number of participants anticipated and requests for any audio or visual equipment needed. The OWNER may at its option allow the use of available audio and visual equipment supplied with the OWNER's facilities. The OWNER does not have any video recording equipment for use by the CONTRACTOR.

5. Requirements:

   a. General:

      (1) In addition to the Operation and Maintenance Training described in paragraph 3-1, furnish manufacturer's representatives for all equipment and systems, including air vacuum release valves, remote pressure monitoring sensors, axial control valves, basket strainers, slide gates, isolation valves, cathodic protection, flow meter, instrumentation equipment, and as specified in individual equipment specifications for detailed classroom and hands-onto OWNER'S personnel on operation and maintenance of specified items.

      (2) Manufacturer's representatives shall be trained, articulate and familiar with facility operation and maintenance requirements as well as with specified equipment.

      (3) Furnish complete training materials to include operation and maintenance data, to be retained by each trainee

   b. Training Plan

      (1) Submit a training plan at least 30 days before startup of equipment in accordance with the Submittals section. The training plan shall be accepted by OWNER prior to training. List specified equipment and systems that require training services, and the general Operation and Maintenance Training specified herein and show:

         (a) Respective manufacturer

         (b) Estimated dates for installation completion

(c) Estimated training dates

c. Lesson Plans

(1) Submit a lesson plans at least 30 days before startup of equipment in accordance with the Submittals section. The lesson plans shall be accepted by OWNER prior to training. Lessons plans shall at a minimum contain the following information:

(a) Title and objectives
(b) Recommended types of attendees

(c) Description and outline of training content

(d) Format (e.g., lecture, self-study, demonstration, hands-on)

(e) Instruction materials and equipment requirements

(f) Resumes of instructors providing the training

(g) Training materials shall be provided in paper and electronic format (.pdf or PowerPoint)

PART 2 – PRODUCTS

Not used.

PART 3 – EXECUTION

3.01 OPERATION AND MAINTENANCE TRAINING:

A. Operation and maintenance training shall include the minimum requirements and time as defined in Section 3.03 – Training Requirements, at the end of this section. All training time periods shall exclude travel time to and from the jobsite. Training shall be video recorded by the CONTRACTOR, with two (2) copies of the video on a thumbdrive provided to the OWNER.

B. In general, the manufacturer's standard training courses may be used if provided with supplemental information developed specific to the OWNER's systems and equipment. Training materials shall be supplied to each individual attending the session. Training shall be a combination of classroom and hands-on instruction.

1. Operation Training Requirements: The CONTRACTOR shall provide operations training for the OWNER's operations personnel including mechanical, electrical, and instrumentation and control staff. The training shall

be scheduled for normal shift times or other shift times as required by OWNER. The facilities Operation and Maintenance Manual shall be used as primary source of operator training.

2. Maintenance Training Requirements: The CONTRACTOR shall provide maintenance training for the OWNER's maintenance personnel including mechanical, electrical, and instrumentation and control staff. The training shall be scheduled for normal shift times. The facilities Operation and Maintenance Manual shall be used as primary source of maintenance training. Additional materials shall be prepared to supplement the Manual.

3.02 SEQUENCE OF TRAINING:

A. Equipment and process system training shall be initiated during Commissioning and completed prior to Operation and Maintenance Training. Operation and Maintenance Training shall be initiated on completion of Commissioning.

3.03 TRAINING REQUIREMENTS

A. Training shall be provided to:
   1. Crew Leaders
   2. Engineers
   3. Electrical / Electronics Maintenance Workers
   4. Engineering Technicians
   5. Maintenance Supervisors
   6. Operators
   7. Operations Supervisors
   8. Plant Maintenance Workers
   9. Others as required

B. Training shall cover Mechanical, Electrical and Instrumentation & Control to support equipment function, normal operation and troubleshooting for system and support systems which is defined as as the completed and restored 42-inch raw water conveyance pipeline and completed new Energy Dissipation Valve (EDV) Chamber

C. The minimum training requirments include but not be limited to the following:

Mechanical Operations

1. Overview and understanding of the function of the process equipment, valves, piping, and control instrumentation.
2. Normal operation parameters and indications of abnormal operation of equipment.
3. Start up and shut down of system and components.
4. Procedures for isolation of equipment.
5. General and specific equipment safety procedures and precautions.

Mechanical Maintenance

1. Lubrication and greasing instructions including type and frequency of lubrication and greasing, and filter changes or flushing required.
2. Servicing and maintenance of mechanical systems.
3. Servicing and maintenance of 42-inch pipeline.
4. Start up and shut down of system and components.
5. Review of supplier catalogs cuts, data sheets, maintenance instructions,
6. Special instructions for removal and replacement of critical items as well as alignment and adjustments.
7. Troubleshooting procedures for equipment.
8. Instructions on completing the Maintenance Log for equipment.
9. Hands-on practice maintenance of the equipment.
10. Periodic inspection requirements as outlined in the BRP WS 32 Conditional Approval

Instrumentation and Controls Overview

1. Overview of the process algorithm controls.
2. Overview of available associated control screens.
3. Overview of integration with existing computer system.
4. Associated PLCs and local controls.

Instrumentation and Controls for Engineering Technicians

1. Functional descriptions of systems and components.

Electrical Maintenance

1. Set up of controls.
2. Functional descriptions of systems and components.
3. Start up and shut down of system and components.
4. Safety precautions and practices.
5. Routine and preventative maintenance.
6. Troubleshooting.
7. Data collection and reporting needs.
8. Card reader building access

END OF SECTION

SECTION 01900

SEISMIC AND WIND REQUIREMENTS

PART 1 - GENERAL

1.01 DESCRIPTION:

A. This section establishes the minimum seismic and wind loading design requirements for architectural, mechanical, electrical and non-structural components.

B. The Contractor shall be responsible for compliance with the seismic and wind requirements specified including conformance by all Subcontractors, manufacturers and Suppliers.

1.02 REFERENCES:

A. American Society of Civil Engineers (ASCE):

1. ASCE/SEI 7: Minimum Design Loads for Buildings and Other Structures

B. American Society of Mechanical Engineers (ASME):

1. B31: Code for Pressure Piping

C. International Code Council (ICC):

1. International Building Code

D. Manufacturers Standardization Society of the Valve and Fitting Industry:

1. SP-58: Pipe Hangers and Supports - Materials, Design and Manufacture

1.03 DEFINITIONS:

A. Components are defined as systems, equipment, parts, or other elements, including supporting structures and attachments.

B. The reference Building Code is the building code cited on the structural drawings or specified herein for the design of the basic structure.

C. The specified seismic criteria is defined as the seismic criteria cited on the structural drawings or specified herein for the design of the basic structure.

D. The specified wind criteria is defined as the wind criteria cited on the structural drawings or specified herein for the design of the basic structure.

1.04 SEISMIC AND WIND DESIGN REQUIREMENTS:

A. Refer to structural drawings for project specific seismic and wind requirements and also conform to the requirements specified herein.

B. Seismic and wind design shall conform to 780 CMR 9th Edition, The Massachusetts State Building Code, the International Building Code and ASCE/SEI 7.

C. Architectural, mechanical, electrical and non-structural components shall be designed and constructed to resist the seismic and wind forces and displacements based upon ASCE/SEI 7, the reference building code, and the specified seismic and wind criteria. In the case of conflict, the more stringent requirements shall govern.

D. The interrelationship of components and their effect on each other shall be such that the failure of one component shall not cause the failure of any other component.

E. Components shall be anchored to the building structure to transfer seismic and wind forces. Connections shall be bolted, welded or otherwise positively anchored to the structure. Anchorage shall not rely on friction for force transfer.

F. Exceptions: Exemption from the requirements for seismic and wind analysis and design are permitted only to the extent permitted by applicable codes and standards.

1.05 SUBMITTALS:

A. Submit the following shop drawings in accordance with Section 01300.

B. Where specified in the technical specifications, provide and complete the Certificate of Unit Responsibility form in Section 01300 and submit to Engineer prior to manufacture of components.

C. In addition, submit the following support data along with Certificate of Unit Responsibility:

1. Certification, signed and sealed by a Professional Structural Engineer registered in the jurisdiction in which the project is located stating that all systems, equipment, and other elements, including supporting structures, attachments and connections are designed to withstand the required seismic and wind forces and displacements.

2. Codes and specifications to which structural design conforms.

1.06 SPECIFIC COMPONENTS:

A. Compound Equipment: Connecting elements for equipment combinations such as pumps and motors, valves and operators, engines and generators, etc. which are not capable of transferring seismic and/or wind loads or accommodating seismic and wind displacements shall be protected by appropriate design.

B. Piping Systems: Support and bracing of piping systems shall account for the weight and hydrodynamic effects of the contents.

C. Pressure Piping: Pressure piping support and bracing shall conform to ASME B 31 in addition to the force and displacement requirements of the reference code.

D. General Supports: Pipe, duct, raceways and cable tray supports, and bracing shall conform to the AISC Manual of Steel Construction and MSS SP-58 in addition to the force and displacement requirements of the reference code.

PART 2 - PRODUCTS

(Not Used)

PART 3 - EXECUTION

(Not Used)

END OF SECTION

SECTION 02012

MONITORING WELL DECOMMISSIONING

PART 1 - GENERAL

1.01 DESCRIPTION:

A. Furnish labor, materials, tools, and equipment for decommissioning monitoring wells as indicated, including grouting, and submitting reports, as indicated.

B. Unless otherwise indicated, Contractor shall decommission one (1) observation well, B21-02, as indicated on the drawings, as well as all observation wells installed by the Contractor at completion of the project when given written authorization by the Engineer.

1.02 RELATED WORK:

A. Section 01300: Submittals

1.03 SUBMITTALS:

A. Submit in accordance with Section 01300.

B. Monitoring well decommissioning shall be provided to the Engineer within one (1) week following the decommissioning.

C. As work progresses, the Contractor shall keep complete, neat, accurate, and legible record of each monitoring well decommissioning. The report shall be a complete and accurate record of the entire decommissioning procedure. At a minimum, the following information shall be provided:

1. Monitoring well name/number

2. A plan showing the location of the decommissioned well

3. Date constructed

4. Date abandoned

5. Depth to static water (prior to decommissioning)

6. Total depth sealed

7. Quantity of sealing material used

8. Description of surface restoration

PART 2 - PRODUCTS

2.01 MATERIALS:

A. Bentonite/ Portland Cement Grout.

1. Mix grout using not more than seven (7) gallons of water per 94-lb. bag of Portland Type II cement. Use 3 to 5 lbs. of bentonite powder per bag of cement. Mix water with bentonite prior to adding cement.

PART 3 - EXECUTION

3.01 DECOMMISSIONING PROCEDURE:

A. Calculate the volume of grout that will be needed and mix 25 to 50% more grout than the calculated volume.

B. Mix grout, as specified, until free of lumps.

C. Pump cement grout through a tremie pipe discharging at the bottom of the observation well screen to ground surface.

D. Restore ground surface:

1. Cut off the top 2 feet of well pipe.

2. Remove roadway box, compact disturbed subgrade, place, and compact crushed aggregate base course to bottom asphalt pavement.

3. Finish surface consistent with adjacent cross-section for hot mix asphalt pavement in accordance with city roadway requirements or loam and seed.

END OF SECTION

SECTION 02018

VIBRATION MONITORING

PART 1 - GENERAL

1.01 DESCRIPTION:

A. Provide vibration monitoring as specified and in compliance with Contract Documents.

1. Furnish, install, maintain, monitor, and remove vibration monitoring equipment as specified.

2. At a minimum, three portable seismographs shall be used concurrently to monitor vibrations at the pre-determined vibration control monitoring points as specified. During rock removal or other vibration-inducing operations, the existing 42-inch PCCP and the existing 72-inch existing tunnel shall be monitored at the closest distance.

3. Monitor vibrations and noise levels originating from construction operations as specified.

4. Modify construction operation procedures if existing operation creates vibration or noise exceeding specified amounts.

5. Vibration and noise levels resulting from construction operations shall conform to the requirements of this specification section and the requirements of all applicable Local and State Authorities.

1.02 RELATED WORK

A. Section 02160: Temporary Excavation Support Systems

B. Section 02210: Earth Excavation, Backfill, Fill and Grading

C. Section 02211: Rock Excavation and Disposal

1.03 QUALITY ASSURANCE:

A. Provide in accordance with Section 01400.

B. Retain the services of an independent Vibration Consulting Firm with the following in-house personnel to conduct the following vibration monitoring requirements:

1. Preparation, signing and stamping of monitoring plans and daily reports, and overseeing monitoring and interpretation of monitoring equipment shall be performed by personnel with the following qualifications:

    a. Be a Massachusetts Registered Professional Engineer.

    b. Have a minimum of five (5) years' experience in the vibration consulting field.

    c. Have successfully completed at least five (5) projects with vibration-inducing operations, and noise levels equal to or more severe than those to be encountered.

2. Installation, monitoring and interpretation of monitoring equipment shall be performed by personnel with the following qualifications:

    a. Have at least three (3) years of experience in the operation of monitoring equipment proposed for use and interpretation of records produced by such equipment.

    b. Have installed, operated, monitored, and interpreted equipment and records on at least three (3) projects with vibration-inducing operations, and noise levels from similar construction activities.

3. Performed and maintained calibration records on all instruments used to monitor the vibration.

1.04 SUBMITTALS:

A. Submit the following shop drawings in accordance with Section 01300.

1. Qualifications of the independent vibration consulting firm's Professional Engineer as specified in subparagraph 1.03B.1 including the names of the five (5) successful projects with names, current addresses, and telephone numbers of persons in charge of representing the owners or the owners at the time of monitored vibration-inducing operation, and noise levels.

2. Qualifications of the vibration consulting firm's personnel to install, operate and interpret the monitoring equipment as specified in subparagraph 1.03B.2 including the name of the personnel and the names of the three (3) projects per person which they installed, operated, monitored, and interpreted monitoring equipment with names, current addresses and telephone numbers of persons in charge of representing the owners or the owners at the time of monitored vibration-inducing operations, and noise levels.

3. Two weeks prior to commencement of rock removal or other vibration inducing operations, submit in writing the plan for monitoring operations and equipment to

be used to assure compliance with the vibration, and noise limitation. As a minimum, this plan shall provide for the following:

a. Manufacturer's brochures and written operation instructions for seismograph recording equipment intended to be used for each vibration occurrence.

b. Instrument specifications and calibrations

c. Description and location of expected vibration and noise producing activities

d. Description of structures, utilities, and other vibration and/or noise sensitive receptors that may be impacted by vibration and noise including structure description and location.

e. Proposed monitoring locations

f. Monitoring program procedure including reporting procedures

g. Proposed methods for mitigating vibration and noise during construction

h. Sample vibration and noise data sheets

4. Daily reports, while rock removal or performing other vibration-inducing operations, detailing each source of vibration, location of monitoring, and the vibration records highlighting peak particle velocities. All daily reports shall be stamped and signed by the Vibration Consulting Firm's Professional Engineer.

1.05 SITE CONDITIONS:

A. Refer to Appendix A – Geotechnical Data Report provided as Appendix A and Section 02023.

PART 2 - PRODUCTS

2.01 EQUIPMENT:

A. Provide a low frequency sensitive three-component seismic recording instrument with wave paper trace, variable trigger level setting, peak particle velocity memory operation (in inches/second) and sound level readout capability that meets the following criteria:

1. Seismic Frequency Range: 2 to 200 Hz (+/- 3 dB)

2. Acoustic Frequency Range: 2 to 200 Hz (+/- 1 dB)

3. Velocity Range: 0.02 to 4.0 inches per second.

4. Sound Range: 90 to 140 dB linear.

5. Transducer: Three mutually perpendicular axes: radial, transverse, and vertical.

6. Recording: Time-history of waveform capability.

B. Manufacturers:

1. Instantel, Inc., Kanata (Ottawa) Ontario, Canada.

2. Slope Indicator Co., Seattle, WA.

3. Thomas Instruments, Inc., Spofford, NH.

C. At a minimum, three portable seismographs shall be used concurrently to monitor vibrations at the pre-determined vibration control monitoring points as specified.

PART 3 - EXECUTION

3.01 EXAMINATION:

A. Furnish specified instrumentation to be installed, operated, and interpreted by the Vibration Consulting Firm's personnel, as specified below.

B. Monitor vibrations and record the entire particle velocity wave train, not just peak velocities. Obtain accurate, legible seismometer records of monitored vibrations.

C. Perform all rock removal and other vibration-inducing operations so that vibrations reaching adjacent structures and facilities are within specified limits.

D. Monitor vibrations by measuring the peak particle velocity in the vicinity of work. Peak particle velocity is defined as a maximum vector sum of three velocity components, measured concurrently in mutually perpendicular directions at any point by an instrument. The peak particle velocity as measured by the Vibration Consulting Firm's personnel on or at the location as specified in the submitted vibration monitoring plan, shall not exceed the local and state regulations.

Type of Concrete	Age of concrete (hrs)	Peak Particle Velocity in./sec
Mass Concrete (footings, mats, slab-on-grade, fill concrete, etc.)	0-10	1.0
	11 and over	2.0
Concrete Structures (walls, columns, elevated slabs, etc.)	0-11	0.5
	11-24	1.0
	24 and over	2.0
Existing Structures, tunnels, residences,	-	0.5

railroad tracks and utilities

E. In the event any recordings indicate that vibration is being exceeded, immediately suspend all vibration-inducing operations and submit a report to the Engineer. Revise operations to reduce vibrations and submit a copy of the revised procedure to the Engineer at no additional cost to the Owner.

F. Noise levels shall not exceed 128 dB and shall be in accordance with all local and state regulations.

G. If evidence of displacement or damage to utilities, equipment, or structures is observed or reported, immediately notify the Engineer and discontinue operations creating the vibrations. Revise operation to reduce vibrations and submit a copy of the revised procedure to the Engineer.

H. Restore or replace utilities, equipment, or structures damaged by vibrations at no additional cost to the Owner.

3.02 CONTRACT CLOSEOUT:

A. Provide in accordance with Section 01700.

END OF SECTION

SECTION 02023

SUBSURFACE UTILITY LOCATING (POTHOLING)

PART 1 - GENERAL

1.01 DESCRIPTION:

A. This section includes materials and procedures for performing pothole operations to locate existing underground utilities as indicated and in compliance with Contract Documents.

1.02 REFERENCES:

A. American Society of Civil Engineers (ASCE):

1. 38-02: Standard Guidelines for the Collection and Depiction of Existing Subsurface Utility Data.

1.03 SUBMITTALS:

A. Submit the following in accordance with Section 01300.

B. Submit request for premarking of pothole locations at least seven calendar days prior to the commencement of field activities.

C. Submit proposed method of potholing, including description of equipment to be used, and schedule for potholing for acceptance at least 14 calendar days prior to the commencement of field activities. Obtain Owner's approval of pothole locations prior to commencement of field activities.

D. Submit field logs to the Owner within two working days after the completion of pothole excavations in each area. Include dates of potholing operations and any additional discovered information or pertinent data. Include for each pothole excavation field log:

1. Pothole number.

2. Date of pothole.

3. Depths to top and bottom of utility (measured from existing grade over utility at pothole).

4. Miscellaneous Contractor's notes.

E. Submit temporary steel plate bridging shop drawings at least seven calendar days prior to the commencement of field activities.

F. Submit controlled low strength material design at least seven calendar days prior to the commencement of field activities.

G. Submit asphalt concrete mix design at least seven calendar days prior to the commencement of field activities.

1.04 PROCEDURES:

A. Subsurface utility-locating (potholing) services shall conform to CI/ASCE 38-02. For the purpose of this scope, "locate" means to obtain the horizontal and vertical position of the utility line by excavating a circular test hole or narrow trench (where approved of and/or requested by the Owner). Construct test holes using vacuum excavation or comparable nondestructive equipment in a manner that will cause no damage to the utility.

B. Subsurface utility locating shall consist of test hole excavations at locations indicated on the pothole plans as approved by the Owner. Narrow trench excavations (slot potholes) may be required at locations approved by the Owner or to locate multiple parallel utilities.

C. Complete mapping of located utilities conforming to requirements of CSA S250 for limits of work stipulated by Owner.

1.05 TIME OF COMPLETION/SCHEDULE:

A. The Contractor shall diligently prosecute the work to completion before the expiration of 15 working days immediately following the date of the project kick-off meeting.

PART 2 - PRODUCTS

2.01 MATERIALS:

A. Controlled Low Strength Material Backfill at Test Holes and at Exploratory Trenches

B. Asphalt Concrete Pavement Repair at Exploratory Trenches and at Test Holes

1. Asphalt concrete paving shall conform to Temporary Paving Details in Contract Drawings.

PART 3 - EXECUTION

3.01 POTHOLING OPERATIONS:

A. Comply with Dig Safe requirements for notification prior to excavation. Contact Dig Safe at 811 no less than two and no more than 10 days prior to the start of exploratory excavation. Verify whether or not a representative of each utility or agency will be

present during excavation, and coordinate with said individual(s). Take any precautions required by the utility owner.

B. Conduct potholing operations in a manner that minimizes the damage potential to existing underground utilities in order to ensure that the existing facilities will remain in operation without interruption. Contractor shall be responsible for, and repair to pre-existing condition (at Contractor's expense) any existing underground utilities damaged by potholing operations.

C. Backfill and repair test hole excavations immediately after obtaining the measurement data. Backfill and repair trench excavations requiring use of temporary steel plate bridging within four working days. Promptly provide notice to the Owner for scheduling field survey activities. Advise Owner of number of pothole excavations completed and number remaining.

D. Location and Depiction of Existing Utilities: Existing utility plans shall be present and utilized during potholing activities. The plans shall be compared to utility/agency paint markings following Underground Service Alert notification as well as locations premarked by the Owner's surveyor. If discrepancies are found between the plans and paint markings, promptly notify the Owner prior to commencement of any excavation.

3.02 EXCAVATION:

A. Protect utilities or underground structures from damage during potholing. Immediately report any damaged utilities to the affected utility's owner and the Owner. Repair immediately any damaged utilities in accordance with the respective utility owner's requirements. Neatly cut and remove existing pavement. Excavate test holes in such a manner as to prevent any damage to wrappings, coatings, or other protective coverings, utilizing vacuum excavation or hand digging.

B. Methods: Backhoe excavation is not permitted except for trench excavations**.** Use the following methods for pothole excavations:

1. Hand Digging: Hand digging is the method of excavating a pothole by manual means with hand-held, nonmechanical equipment such as a shovel.

2. Vacuum Excavation: Vacuum excavation shall consist of air or water pressure to break up the soil and a vacuum device to collect the spoil. Determine if air or water vacuum excavation shall be used depending upon specific site and environmental characteristics. Soil type such as heavy clay may require water vacuum excavation. Utilize air vacuum excavators if mud from water vacuum excavators cannot be disposed properly. Use air vacuum excavators if damage to utilities, such as cutting through cables, will occur with the use of water vacuum excavators.

a. Air: Air vacuum excavators shall utilize a high velocity air stream to penetrate, expand, and break up the soil. Remove the loosened particles of soil and rock from the excavation through the use of a vacuum.

b. Water: Water vacuum excavation systems shall excavate the pothole using high-pressure water to reduce and loosen the soil. Remove the wet soil and mud slurry to a spoil tank using a vacuum.

3.03 TEMPORARY STEEL PLATE BRIDGING, WITH A NONSKID SURFACE (WHERE REQUIRED FOR APPROVED TRENCHES)

A. Provide steel plate bridging with a nonskid surface and shoring to preserve unobstructed traffic flow. In such cases, the following conditions shall apply:

1. Steel plates used for bridging shall extend a minimum of 12 inches beyond the edges of the trench.

2. Install steel plate bridging to operate with minimum noise.

3. Shore the trench to support the bridging and traffic loads.

4. Use temporary paving with cold asphalt concrete to feather the edges of the plates if plate installation is used.

5. Secure bridging against displacement by using adjustable cleats, shims, or other devices.

B. Maintain the steel plates, shoring, and asphalt concrete ramps.

3.04 POTHOLE REPAIR:

A. After excavating a test hole or trench, provide and install a temporary steel cap (over test hole) or temporary steel plate bridging (over trench).

B. Following data gathering by surveyor, remove temporary steel caps and/or steel plate bridging, and backfill excavation with accepted material.

C. The finished surface of the repair shall be of like material and constructed to the same finished grade as the adjacent pavement. The finished surface shall be such that it does not allow water to pond. There shall be no discernable difference in surface level at the joint between the existing pavement and the completed repair.

3.05 DISPOSAL OF CUTTINGS:

A. Dispose of cuttings off-site.

3.06 CLOSEOUT ACTIVITIES:

A. Provide in accordance with Section 01700.

END OF SECTION

SECTION 02050

DEMOLITION AND ALTERATIONS

PART 1 – GENERAL

1.01 DESCRIPTION:

A. Demolish and alter existing facilities as indicated on drawings, as specified, and as directed by Engineer.

B. Remove, salvage, or otherwise dispose of minor site improvements as specified in Section 02100.

1.02 RELATED WORK:

A. Section 02100: Site Preparation

B. Section 02210: Earth Excavation, Backfill, Fill and Grading.

1.03 SUBMITTALS:

A. Submit the following in accordance with Section 01300:

1. Submit to Engineer for review, a demolition plan describing proposed sequence, methods, and equipment for demolition and disposal of each structure.

1.04 QUALITY ASSURANCE:

A. Provide in accordance with Section 01400 and as specified.

B. Demolish and remove existing construction, utilities, equipment, and appurtenances without damaging integrity of existing structures, equipment, and appurtenances that are to remain.

C. Store equipment to be salvaged for relocation where directed by Engineer, and if necessary, protect from damage during work.

D. Repair or remove items that are damaged. Repair and install damaged items at no additional compensation and to condition at least equal to that which existed prior to start of work.

E. Exercise all necessary precautions for fire prevention. Make acceptable fire extinguishers available at all times in areas where demolition work by burning torches is being done.

Do not burn demolition debris on or near site.

F. Protect persons and property throughout progress of work. Proceed in such manner as to minimize spread of dust and flying particles and to provide safe working conditions for personnel.

G. Maintain circulation of traffic within area at all times during demolition operations.

H. Obtain permission from Engineer before abandoning or removing any existing structures, materials, equipment and appurtenances.

I. Make necessary arrangements with and perform work required by utility companies and municipal departments for discontinuance or interruption of utility services due to demolition work.

PART 2 - PRODUCTS (NOT APPLICABLE)

PART 3 – EXECUTION

3.01 PREPARATION:

A. Provide three reference points for each survey marker and monument removed, established by a licensed civil engineer or land surveyor and record locations and designations of survey markers and monuments prior to removal.

B. Store removed markers and monuments during demolition work, and replace upon completion of work. Reestablish survey markers and monuments in conformance with recorded reference points. Forward letter to Engineer signed by licensed civil engineer or land surveyor verifying reestablishment of survey markers and monuments.

3.02 DEMOLITION:

A. Confine apparatus, storage of materials, demolition work, new construction, and operations of workmen to areas that will not interfere with continued use and operation of entire facility. Provide and maintain lights, barriers, and temporary passageways for free and safe access.

B. Wet down work during demolition operations to prevent dust from arising. Provide maximum practicable protection from inclement weather for materials, equipment, and personnel located in partially dismantled structures. Provide shoring or bracing where necessary to prevent settlement or displacement of existing or new structures. Do not overload floors. Complete demolition work on upper levels before disturbing supporting members on lower levels.

C. Clean cellars and tanks of materials unsuitable for fill, where below-grade portions of structures are not indicated to be removed. Demolish foundation walls to a depth of not less than two-feet below existing ground level. Break cellar and tank floors into pieces having area not more than four-square feet with well-defined cracks through full depth of floor. Provide holes having area at least one-square foot through floors at intervals of ten-feet lengthwise and crosswise.

D. Fill cellars and tanks with acceptable solid fill resulting from removal operations and/or with suitable borrow material to level of adjacent ground. Place and compact fill in accordance with applicable requirements of Section 02210. Do not place solid fill from removal operation above an elevation one-foot below final grade.

E. Cap or plug with brick and mortar, as indicated, pipes and other conduits abandoned due to demolition.

3.03 SALVAGE:

A. Materials, equipment, and appurtenances removed, that are not designated for relocation, become property of Contractor. Haul from site and dispose of at no additional compensation.

B. Salvage fire hydrants for future re-use in the same location . Store in vicinity of original location and place so as not to interfere with construction.

3.04 CONTRACT CLOSEOUT:

A. Provide in accordance with Section 01700.

END OF SECTION

SECTION 02100

SITE PREPARATION

PART 1 - GENERAL

1.01 DESCRIPTION:

A. Furnish, labor, material, tools and equipment to prepare site as indicated and specified.

1.02 RELATED WORK:

A. Division 1: General Requirements

B. Section 02210: Earth Excavation, Backfill, Fill and Grading

C. Section 02480: Wetland Restoration and Landscaping

1.03 QUALITY ASSURANCE:

A. All work to be performed in accordance with the requirements specified in the applicable sections of Division 1 - General Requirements.

B. All work to be in accordance with applicable permits.

1.04 JOB CONDITIONS:

A. It is the intent of this specification that existing trees within grading and seeding limits, not disturbed by construction operations, be saved and protected, except where specified to be removed. Clear trees required to be removed only after approval by Engineer. Engineer directs variations required in grading on the job.

PART 2 - PRODUCTS (NOT USED)

PART 3 - EXECUTION

3.01 EXISTING TREES AND VEGETATION:

A. Avoid cutting or injuring trees and vegetation outside easement line and outside areas to be cleared as indicated, without Engineer's permission.

B. Contractor responsible for damages outside these lines.

C. Remove trees within permanent and temporary easement as designated by Engineer.

3.02 EXISTING STRUCTURES AND PROPERTY:

A. Remove existing signs, posts, catch basin frames and grates, manhole frames and covers, and granite curbing within construction path unless directed otherwise.

B. Store at site designated by Owner, items in reusable conditions as determined by Engineer.

C. For work in loamed areas, strip all loam to one side to avoid mixing with excavation materials. Do not take loam from site.

3.03 CLEARING:

A. Cut or remove all trees, brush, and other vegetable matter such as snags, bark and refuse, from areas to be cleared. Clear ground to width of permanent easement unless otherwise directed.

B. Cut trees, stumps, and stubs to be cleared, except where clearing done by machinery, as close to ground surface as practicable, but no more than 6 in. above ground surface for small trees and 12 in. for larger trees.

C. Bury Elm bark, at least 1 ft. deep, or burn in incinerators off site with antipollution controls and fire prevention controls, to prevent spread of Dutch Elm disease as required by applicable laws.

3.04 CLEARING IN WOODED AREA:

A. Chip and stockpile wood cleared at location directed by Owner. Do NOT PERMIT use of elm wood and elm bark as wood chips.

B. Chip and spread wood cleared at locations and cover as indicated. Do NOT PERMIT use of elm wood and elm bark as wood chips.

C. Supply and spread wood chips.

3.05 GRUBBING, STRIPPING, DISPOSAL:

A. Remove stumps, roots larger than 3 in. in diameter to a depth of 12 in., and roots larger than 1/2 in. in diameter to a depth of 6 in. Measured depths from existing

ground surface or proposed finished grade, whichever is lower.

B. Strip stumps, roots, foreign matter, topsoil, loam and unsuitable earth from ground surface. Utilize topsoil and loam insofar as possible, for finished surfacing. Taking loam from site NOT PERMITTED.

C. Promptly dispose of material offsite, in accordance with all applicable laws, ordinances, rules and regulations. Material from clearing and grubbing shall not be reused or stockpiled. Do not consider work completed until final cleaning, unless otherwise directed.

D. Burning not permitted.

3.06 WORK IN IMPROVED PROPERTY:

A. Protect or dig up, trees, cultivated hedges, lawns, shrubs, and plants which might be damaged by Contractor's operations, and temporarily replant and maintain. After construction operations have been substantially completed, replant in original positions and maintain until growth is reestablished. If trees, cultivated hedges, shrubs, and plants are injured to such a degree as to affect their growth or diminish their beauty or usefulness, replace at no additional compensation, by items at least equal to that existing at start of work. Trees which cannot be temporarily replanted and maintained are to be replaced with trees at least equal to that existing at start of work. Guarantee survival of trees and shrubs for 1 year after restoration is complete. Loam and seed lawns damaged by Contractor's operation, as specified.

B. Do such hand work as may be required to prevent damage to buildings or trees in all work in improved property.

3.07 CONTRACT CLOSEOUT

A. Provide in accordance with Section 01700.

END OF SECTION

SECTION 02123

COMBINATION AIR-RELEASE AND VACUUM-RELIEF VALVES

PART 1 - GENERAL

1.01 DESCRIPTION

This section includes materials and installation of combination air-release valves for water service.

1.02 SUBMITTALS

A. Submit shop drawings in accordance with the General Conditions and Section 01300.

B. Submit manufacturer's catalog data and detail drawings showing all valve parts and described by material of construction, specification (such as AISI, ASTM, SAE, or CDA), and grade or type. Show linings and coatings.

C. Certified test reports shall be available upon request.

1.03 REFERENCES

A. AWWA M51: American Water Works Association, *Manual of Practice M51: Air Valves: Air Release, Air/Vacuum, And Combination, Second Edition*,

B. ANSI/AWWA Standard C512, Air Release Valves, Air/Vacuum, and Combination Air Valves for Water and Wastewater Service

C. ANSI/AWWA C514, Air Valve and Vent Inflow Preventer Assemblies for Potable Water Distribution System and Storage Facilities

PART 2 - MATERIALS

2.01 VALVE DESIGN AND OPERATION

A. Valve design shall comply with AWWA C512, except as modified herein. Class 150 valves shall have a maximum working pressure of at least 150 psi.

B. The combination air-release and air/vacuum valve shall provide both pressurized low volume air release and low pressure air exhaust/vacuum breaking air inlet valve functions. Valve shall be of single or dual chamber design with hydro-mechanical mechanisms to control the flow of air into and out of the valve. Valve shall have a double (small and large) orifice design governing each function. Valves shall utilize floats or equivalent mechanisms within the valve body to control the opening and closing of the valve's

orifices. The large orifice and small orifice shall work together during air exhaust while the small orifice shall work independent of the large orifice during high pressure air release.

C. Floats, if used, must not deform, leak, or experience damage of any kind at twice the design pressure, with floats providing continuous discharge of pressurized air release. Floats, if used, shall be constructed of Type 316 Stainless Steel or HDPE. Floats, if used, must be guided to ensure vertical travel onto and off the valve seat. The Air Release and Air/Vacuum seating action shall be direct driven by the float or equivalent device. No linkages shall be used.

D. Pipeline valves shall have an integral anti-surge mechanism that shall operate automatically to reduce the flow of air being exhausted through the valve so that any transient pressure rise or shock induced by valve closure is limited to within the valve's rated working pressure.

E. The large orifice area for air intake and exhaust shall be equal to the nominal size of the valve. The large orifice sealing shall be affected by the flat face of the control float seating against a nitrile rubber or BUNA-N rubber O-ring housed in dovetail groove circumferentially surrounding the orifice. Discharge of pressurized air shall be controlled by the seating and unseating of a small orifice nozzle on a natural rubber seal affixed into the control float. The nozzle shall have a flat seating land surrounding the orifice.

F. Additional plugged NPT ports shall be provided near the top and bottom of the body for testing and draining.

G. A 90-degree threaded side outlet shall be included with the valve with an extension pipe with an NPT connection.

H. Provide a 1/4-inch NPT test/bleed cock.

I. Prior to the ingress of liquid into the valve chamber, as when the pipeline is being filled, valves shall vent air through the large and small orifices. At higher water approach velocities in pipeline valves, the valve shall automatically discharge air through the anti-surge ~~orifice~~ mechanism and reduce water approach velocity.

J. Pipeline valves shall not exhibit leaks or weeping of liquid past the large orifice seal at operating pressures of 7 psi to twice rated working pressure.

K. EDV chamber valve shall not exhibit leaks or weeping of liquid past the large orifice seal at operating pressures of 2 psi to twice rated working pressure.

L. Valves shall respond to the presence of accumulated air by discharging it through the small orifice at any pressures within the specified design range and shall remain leak tight in the absence of air.

M. Valves shall react immediately to subatmospheric pressures within the pipeline by the full opening of the large orifice so as to allow unobstructed air intake with a pressure drop across the valve of 5 psi or less.

N. Maximum Fluid Temperature: 180 deg F (82.2 deg C)

2.02 MATERIALS OF CONSTRUCTION

A. Materials of construction for air-release valves/air and vacuum-relief valves for water service shall be as follows:

Item	Material	Specification
Top flange, lower flange	Cast Iron Stainless Steel	ASTM A126 Class B AISI Type 304L316
Top cover	Cast Iron Stainless Steel	ASTM A126 Class B AISI Type 304L316
Barrel	Stainless steel	AISI Type 316
Floats	HDPE or Stainless Steel	–
Air-release nozzle or orifice mechanism	Stainless steel	AISI Type 316
Nozzle seal	Nitrile or BUNA-N rubber	–
Nozzle seal retaining plate	Stainless steel	AISI Type 316
Tie rods assembly and support fasteners	Stainless steel	AISI Type 316
Float O-ring seals	Nitrile or BUNA-N rubber	–
All metal internal and external bolting and other hardware including pins, set screws, studs, bolts, nuts, and washers:	Stainless Steel	AISI Type 316

2.03 VALVE END CONNECTIONS

A. Valves 3 inches and larger shall have flanged ends.

B. Valves 2 inches and smaller shall have threaded NPT connections.

2.04 MANUFACTURERS

A. Inlet Works Vault Combination Air-Vacuum Valves to be supplied by one of the following manufacturers:

Vendor	Model No.	Large Orifice Size, in.	Small Orifice Size, in.	Rated Pressure, psi	Valve Height, inch (excluding isolation valve)	Notes
ARI USA	D-046NS	6	0.172	232	29.81	Metal Model with Elbow Outlet
GA Industries (VAG)	980-DC (980.01E)	6	0.188	200	30.375	Figure 960-D Combination Air Valve with F284-D Surge Check, factory assembled and tested as a unit
Apco	150C	6	0.125	300	31.75 (22.75 for 149C plus 9.0 for CSV)	Includes 4" Surge Check Valve (CSV)
Ventomat	150-RBX-19-4-1-S6	6	Integral with large orifice	276	25.6875	

B. Pipeline Combination Air-Vacuum Valves to be supplied by one of the following manufacturers:

Vendor	Model No.	Large Orifice Size, in.	Small Orifice Size, in.	Rated Pressure, psi	Valve Height, inch (excluding isolation valve)	Notes
ARI USA	D-046NS	4	0.165	232	21.14	Metal Model with Elbow Outlet
GA Industries (VAG)	983.01D	4	0.094	200	19.25	Figure 950-D Combination Air Valve with F284-D Surge Check, factory assembled and tested as a unit

Vendor	Model No.	Large Orifice Size, in.	Small Orifice Size, in.	Rated Pressure, psi	Valve Height, inch (excluding isolation valve)	Notes
Apco	149C	4	0.094	300	24.375 (17.125 for 149C plus 7.25 for CSV)	Includes 4” Surge Check Valve (CSV)
Ventomat	100-RBX-19-4-1-S6	4	Integral with large orifice	276	25.6875	

C. EDV Chamber combination air/vacuum valves to be supplied by one of the following manufacturers:

Vendor	Model No.	Small Orifice Size, in.	Rated Pressure, psi	Valve Height, in (excluding isolation valve)	Notes	Valve Type
ARI USA	D-050	0.1539	145	14.68	Large Orifice Area = 3.038 in^2	A/V
GA Industries (VAG)	945-T	0.125	300	9.375		A/V
Apco (Dezurik)	1800 with ARV50A	0..09375	175	11.72	A/V body style 140 with side mounted Air Release body style 50A	A/V
Ventomat	050-RBX-2521		363	12.8	Custom Pressure Air Release orifice. Consult with Vendor	A/V

PART 3 - EXECUTION

3.01 SERVICE CONDITIONS

A. Contractor shall review the Plan & Profile drawings for vertical clearance limitations and to confirm actual soil covers before ordering any valves.

B. Special service conditions for Inlet Works Vault valves shall be as described below. Design the valves to incorporate the various conditions presented. In addition to the Steady State Pressures noted below the valve shall be capable of resisting conditions within the pipe due to Internal transient pressures of (in excess of Pw) Pt = 60 psi and/or Internal vacuum pressure of P_v = -14.7 psi (full vacuum).

Loca-tion	Qty	Elevation, ft	Steady State Pressure, psi	Air Venting Volume, scfm[1]	AWWA M51 Recommend-ed Small Orifice Diameter, in	Venting Flow Rate, scfm[1]	Selected Large Air/ Vacuum Orifice Size, in.
Inlet Works Vault	1	792.00	69	117.0	0.385	1,164	6
Note:	1. scfm=Standard cubic feet per minute measures the flow rate of gas under standard pressure and temperature conditions.						

C. Special service conditions for pipeline valves shall be as described below. Design the valves to incorporate the various conditions presented. In addition to the Steady State Pressures noted below the valve shall be capable of resisting conditions within the pipe due to Internal transient pressures of (in excess of Pw) Pt = 60 psi and/or Internal vacuum pressure of P_v = -14.7 psi (full vacuum).

Manway	Elevation, ft	Steady State Pressure (Pw), psi	Air Venting Volume, scfm[1]	AWWA M51 Recommended Small Orifice Diameter, in.	Venting Flow Rate, scfm[1]	Selected Large Air/Vacuum Orifice Size, in.
Manway 1A	782	50.6	117.0	0.385	1,164	4
Manway 1B	772	53.8	117.0	0.375	1,164	4
Manway 2	768	59.7	117.0	0.360	1,164	4
Manway 3	708	74.2	117.0	0.330	1,164	4
Manway 4	660	104.3	117.0	0.285	1,164	4
Manway 5	682	89.0	117.0	0.305	1,164	4
Manway 6	753	53.6	117.0	0.376	1,164	4
Manway 6A	782	40.7	117.0	0.417	1,164	4

Manway	Elevation, ft	Steady State Pressure (Pw), psi	Air Venting Volume, scfm[1]	AWWA M51 Recommended Small Orifice Diameter, in.	Venting Flow Rate, scfm[1]	Selected Large Air/Vacuum Orifice Size, in.
Manway 6B	793.5	39.0	117.0	0.424	1,164	4
Manway 7	745	54.4	No Air Release Valve			
Manway 8	673	78.1	117.0	0.323	1,164	4
Manway 9	630	100.9	117.0	0.289	1,164	4
Manway 10	514	141.5	117.0	0.249	1,164	4
manway 10A	536	140.2	117.0	0.250	1,164	4
Manway 11	535	152.5	No Air Release Valve			
Note:	1. scfm=Standard cubic feet per minute measures the flow rate of gas under standard pressure and temperature conditions.					

D. Special service conditions for EDV Chamber valves shall be as described below. Design the valves to incorporate the various conditions presented.

Location	Qty	Elevation, ft	Steady State Pressure, psi	Air Venting Volume, scfm[1]	AWWA M51 Recommend-ed Small Orifice Diameter, in	Venting Flow Rate, scfm[1]	Selected Large Air/ Vacuum Orifice Size, in.
EDV Cham-ber	3	495.50	(-0.97) to 2.7	65	1.66	500	2
Note:	1. scfm=Standard cubic feet per minute measures the flow rate of gas under standard pressure and temperature conditions.						

E. Valves shall seat drip tight at the specified seating pressure.

3.02 FACTORY TESTING

A. Test each valve per AWWA C512, Section 5 and the following.

B. Hydrostatically test the pressure-containing parts at the factory with water for 30 minutes minimum at a pressure of 1.5 times the working pressure but not less than 20 psig. Test shall show zero leakage. If leaks are observed, repair the valve and retest. If dismantling is necessary to correct valve deficiencies, provide an additional operational test per AWWA C512, Section 5 for each affected valve.

C. The chloride content of liquids used to test austenitic stainless steel materials shall not exceed 50 ppm. To prevent deposition of chlorides as a result of evaporative drying, remove residual liquid from tested parts at the conclusion of the test.

3.03 PAINTING AND COATING

A. Line and coat cast-iron valves with fusion-bonded epoxy. Do not coat seating areas and plastic, bronze, stainless steel, or other high alloy parts.

3.04 SHIPMENT AND STORAGE

A. All valves labelled with designated installation location, Valve Type, and service conditions.

B. Pack and ship one copy of the manufacturer's standard installation instructions with the equipment. Provide the instructions necessary to preserve the integrity of the storage preparation after the equipment arrives at the jobsite and before start-up.

C. Provide flanged openings with metal closures at least 3/16-inch thick, with elastomer gaskets and at least four full-diameter bolts. Provide closures at the place of pump manufacture prior to shipping.

D. Provide threaded openings with steel caps or solid-shank steel plugs. Do not use nonmetallic (such as plastic) plugs or caps. Provide caps or plugs at the place of pump manufacture prior to shipping.

E. Clearly identify lifting points and lifting lugs on the valves. Identify the recommended lifting arrangement on boxed equipment.

3.05 INSTALLATION

A. Clean flanges by wire brushing before installing flanged valves. Clean flange bolts and nuts by wire brushing, lubricate threads with oil and graphite, and tighten nuts uniformly and progressively. If flanges leak under pressure testing, loosen or remove the nuts and bolts, reseat or replace the gasket, reinstall or retighten the bolts and nuts, and retest the joints. Joints shall be watertight.

B. Clean threaded joints by wire brushing or swabbing. Apply Teflon® joint compound or Teflon® tape to pipe threads before installing threaded valves. Joints shall be watertight.

C. Do not use duct tape and plastic for covering the ends of pipe flanges. Use a solid metal cover with rubber gasket to cover flange openings during installation. These metal covers shall remain in place until the piping is connected to the valves.

D. Do not spring flanges of connecting piping into position. Separately work connecting piping systems into position to bring the piping flanges into alignment with the matching valve flanges. Do not move valves to achieve piping alignment. Do not use electrical heating stress relieving to achieve piping alignment.

E. Line up pipe flange bolt holes with valve nozzle bolt holes within 1/16 inch maximum offset from the center of the bolt hole to permit insertion of bolts without applying any external force to the piping.

F. Flange face separation shall be within the gasket spacing ±1/16 inch. Use only one gasket per flanged connection.

G. Valve Vault Installation

1. Valve vaults should be large enough to provide a minimum of 1.5 feet of clearance around and above the air valve for maintenance and valve removal. A valve vault should have adequate screened ventilation to satisfy the air requirements for the valve and ventilation for the structure.

3.06 VALVE FIELD PRESSURE AND LEAKAGE TESTING

A. Test valves at the same time that the connecting pipelines are pressure tested. Protect or isolate any parts of valves, operators, or control and instrumentation systems whose pressure rating is less than the test pressure.

B. Test valves at the same time that the connecting pipelines are leak tested.

END OF SECTION

SECTION 02140

DEWATERING

PART 1 - GENERAL

1.01 DESCRIPTION:

A. Design, furnish, operate, maintain, and remove temporary dewatering systems to control groundwater and surface water to maintain stable, undisturbed subgrades, and permit work to be performed under dry and stable conditions. Work to be done as part of dewatering includes, but is not limited to:

1. Lower the groundwater level.

2. Lower hydrostatic pressure.

3. Prevent surface water from entering the excavation during construction.

4. Implement erosion control measures for disposing of discharge water.

5. Provide groundwater recharging systems as specified and as indicated on the Drawings.

B. Groundwater within the excavation area shall be lowered to at least 2 feet [60 cm.] below the lowest excavation levels as specified and as indicated.

C. Common dewatering methods include, but are not limited to, sump pumping, deep wells, well points, vacuum well points, or any combinations thereof.

D. Perform all work in accordance with current applicable regulations and codes of Federal, State, and local agencies.

1.02 RELATED WORK:

A. Section 01110: Environmental Protection Procedures

B. Section 01568: Erosion Control, Sedimentation and Containment of Construction Materials

C. Section 02160: Temporary Excavation Support Systems

D. Section 02210: Earth Excavation, Backfill, Fill, and Grading

E. Section 02223: Screened Gravel

F. Section 02224: Bank-Run Gravel

G. Section 02435: Crushed Stone

H. Section 02273: Geotextile Fabric

1.03 SUBMITTALS:

A. Submit the following in accordance with Section 01300:

1. Submit a dewatering plan, and a groundwater recharge/ discharge plan at least two weeks prior to start of any dewatering operation. Do not submit design calculations. The review will be only for the information of the Owner and third parties for an overall understanding of the project relating to access, maintenance of existing facilities, and proper utilization of the site. The Contractor shall remain responsible for the adequacy and safety of the means, methods, and sequencing of construction. The plan shall include the following items as a minimum:

a. Dewatering plan and details stamped and signed by a Registered Professional Engineer.

b. Certificate of Design: Refer to Section 01300.

c. A list of equipment including, but not limited to, pumps, prime movers, and standby equipment. This list shall include rating and type of all pumps.

d. Detailed location of all pumps, the intake and discharge positions of all hoses, and the detailed location of all dewatering bags.

e. Detailed description of dewatering, maintenance, and system removal procedures.

f. Erosion/sedimentation control measures, and methods of disposal of pumped water.

g. Disposal locations near Wetland 1, Wetland 2, and Wetland 3 have been predetermined and identified on the contract drawings. Dewatering effluent at the EDV Chamber shall be discharged to a sedimentation filter bag to be placed near the channel downstream of the Sedimentation Basin (identified on the plans at Intermittent Stream 2) in an area specified on the contract drawings. These locations shall be specified in the dewatering plan.

h. Stormwater management best management practices to separate stormwater from the area of during work and while the site is unstable.

i. List of all applicable laws, regulations, rules, and codes to which dewatering design conforms.

j. List of assumptions for design of dewatering and duration of pumping and or recharge.

2. A modified dewatering plan within 24 hours, if open pumping from sumps and ditches results in boils, loss of fines or softening of the ground.

3. Procure coverage under the US EPA NPDES Construction General Permit for the 42-inch pipeline repair dewatering and EDV Chamber site dewatering discharge into the Sedimentation Basin overflow channel.

4. Prepare a Stormwater Pollution Prevention Plan as required by the National Pollution Discharge Elimination System Construction General Permit.

1.04 QUALITY ASSURANCE:

A. Provide in accordance with Section 01400 and as specified.

B. Employ the services of a dewatering specialist or firm having the following qualifications:

1. Have completed at least five (5) successful dewatering projects of equal size and complexity and with equal systems within the last five (5) years.

2. Retain the services of a Registered Professional Engineer (in the state where the project is located) having a minimum of five (5) years experience in the design of well points, deep wells, recharge systems, or equal systems.

C. If subgrade soils are disturbed or become unstable due to dewatering operation or an inadequate dewatering system, notify the Engineer, stabilize the subgrade, and modify system to perform as specified at no additional cost to the Owner.

D. Notify the Engineer immediately if any settlement or movement is detected on structures. If the settlement or movement is deemed by the Engineer to be related to the dewatering, take actions to protect the adjacent structures and submit a modified dewatering plan to the Engineer within 24 hours. Implement the modified plan and repair any damage incurred to the adjacent structures at no additional cost to the Owner.

E. If oil and/or other hazardous materials are encountered after dewatering begins, immediately notify the Engineer.

1.05 DELIVERY, STORAGE AND HANDLING:

A. Provide in accordance with Section 01610 and as specified.

1.06 PROJECT/SITE CONDITIONS:

A. Subsurface Conditions: Refer to Section 02023.

PART 2 - PRODUCTS

2.01 MATERIALS:

A. Provide a dewatering bag with a fabric flow rate of 95 gal./min./sq.ft. (at a minimum) and a capacity of at least 200 cubic yards of settled material. Station this dewatering bag in the location west of the Sedimentation Basin overflow channel where specified on the contract drawings.

B. Provide and store auxiliary dewatering equipment, consisting of pumps and hoses on the site in the event of breakdown, at least one (1) pump for every five (5) used.

C. Provide and maintain erosion/sedimentation control devices as indicated or specified and in accordance with the dewatering plan.

D. Provide temporary pipes, hoses, flumes, or channels for the transport of discharge water to the discharge locations.

E. Provide cement grout having a water cement ratio of 1 to 1 by volume.

PART 3 - EXECUTION

3.01 EXECUTION:

A. Execution of any earth excavation, installing earth retention systems, and dewatering shall not commence until the related submittals have been reviewed by the Engineer with all Engineer's comments satisfactorily addressed and the geotechnical instrumentation has been installed.

B. Furnish, install, and maintain dewatering system in accordance with the dewatering plan.

C. Carry out dewatering program in such a manner as to prevent undermining or disturbing foundations of existing structures or of work ongoing or previously completed.

D. Do not excavate until the dewatering system is operational.

E. Unless otherwise specified, continue dewatering uninterrupted until all structures, pipes, and appurtenances below groundwater level have been completed such that they will not be floated or otherwise damaged by an increase in groundwater elevation.

F. Discontinue open pumping from sumps and ditches, if such pumping is resulting in boils, loss of fines, softening of the ground, or instability of the slopes. Modify dewatering plan and submit to the Engineer at no additional cost to the Owner.

G. Where subgrade materials are disturbed or become unstable due to dewatering operations, remove and replace the materials in accordance with Section 02210 at no additional cost to the Owner.

H. Dewatering Discharge:

1. Install and monitor recharge systems when specified and/or indicated and in accordance with the submitted dewatering plan.

2. Do not place dewatering controls, such as pumped water filter bags, on steep slopes.

3. Use a sedimentation filter bag to filter all effluent prior to discharge. Treat and discharge effluent from Wetland 1, Wetland 2, and Wetland 3 in areas specified on the contract drawings, and effluent from the EDV Chamber excavation in the dewatering area adjacent to the Sedimentation Basin overflow channel where specified on the contract drawings.

4. Do not discharge visible floating solids or foam.

5. For backwash water, either haul it away for disposal or return it to the beginning of the treatment process.

6. At all points where dewatering water is discharged, comply with the velocity dissipation requirements to minimize channel and streambank erosion and scour in the immediate vicinity of discharge points Replace and clean the filter media used in dewatering devices when the pressure differential equals or exceeds the manufacturer’s specifications.

7. The discharge must not cause the formation of a visible sheen on the water surface, or visible oily deposits on the bottom or shoreline of the receiving water. Use an oil-water separator or suitable filtration device (such as a cartridge filter) designed

to remove oil, grease, or other products if dewatering water is found to or expected to contain these materials.

8. Any water released as a result of this project shall make use of a temporary stilling/detention pond or similar method to remove sediment prior to release from the site. The discharge of untreated water into, upon, across, or over any wetland or waterbody is prohibited.

9. If emergency dewatering requirements arise, the Contractor shall submit a contingency plan to the Engineer for approval, which provides for the pumped water to be contained in a settling basin, to reduce turbidity prior to discharge.

10. Install sand and gravel filters in conjunction with well points and deep wells to prevent the migration of fines from the existing soil during the dewatering operation.

11. Use energy dissipators where necessary.

12. Transport pumped or drained water to discharge location without interference to other work, damage to pavement, other surfaces, or property.

13. Provide separately controllable pumping lines.

14. The Engineer reserves the right to sample discharge water at any time.

15. Immediately notify the Engineer if suspected contaminated groundwater is encountered. Do not pump water found to be contaminated with oil or other hazardous material to the discharge locations.

I. Monitoring Devices and Records:

1. Install settlement markers on structures within the zone of influence for dewatering a distance equal to twice the depth of the excavation, from the closest edge of the excavation. Conduct and report settlement surveys to 0.01 ft.

2. For linear excavations such as trenches, the zone of influence for dewatering shall be a distance equal to three times the depth of the trench from its closest edge.

3. For large rectangular, square, or circular mass excavations, the zone of influence shall be defined by the actual cone of dewatering influence corresponding to a 10% increase in effective vertical stress.

J. Install and maintain erosion/sedimentation control devices at the point of discharge as indicated or specified and in accordance with the dewatering plan.

K. Removal:

1. Do not remove dewatering system without written approval from the Engineer.

2. Affirm that the substrate of the area of alteration is stable prior to the reestablishment of flow within it.

3. Backfill and compact sumps or ditches with screened gravel or crushed stone wrapped with geotextile fabric in accordance with Section 02210.

3.02 CONTRACT CLOSEOUT:

A. Provide in accordance with section 01700.

END OF SECTION

SECTION 02160

TEMPORARY EXCAVATION SUPPORT SYSTEMS

PART 1 - GENERAL

1.01 DESCRIPTION:

A. Design, furnish and install temporary excavation support systems as required to maintain lateral support, prevent loss of ground, limit soil movements to acceptable limits and protect from damage existing and proposed improvements including, but not limited to, pipelines, utilities, structures, roadways, and other facilities.

B. Common types of excavation support system include, but are not limited to, singular or multiple stages comprised of cantilevered or internally braced soldier piles and lagging, steel sheetpile wall, timber sheetpile wall, trench box, or combinations thereof. Trench box temporary excavation support system is only acceptable for pipe or utility trench excavations. Temporary unsupported open cut excavation with stable sloping sides is allowed where applicable.

C. Wherever the word "sheeting" is used in this section or on the contract drawings, it shall be in reference to any type of excavation support system specified except trench box.

D. Construction of the temporary excavation support systems shall not disturb the existing structures or the completed proposed structures. Damage to such structures shall be repaired by the Contractor at no additional cost to the Owner.

E. Adjacent structures are those that bear upon soils above the proposed excavation depth and within a distance equal to twice the total depth of the excavation away from the closest edge of the excavation. Monitor and protect adjacent structures as specified and indicated.

F. Vibration monitoring for excavation support systems will be performed by Contractor’s Vibration Consulting Firm. Vibration due to Contractor’s operations shall meet the requirements as specified in Section 02018.

G. The Contractor shall bear the entire cost and responsibility of correcting any failure, damages, subsidence, upheaval, or cave-ins as a result of improper installation, maintenance, or design of the temporary excavation support systems. The Contractor shall pay for all claims, costs and damages that arise as a result of the work performed at no additional cost to the Owner.

1.02 RELATED WORK:

A. Section 01110: Environmental Protection Procedures

B. Section 02018: Vibration Monitoring

C. Section 02140: Dewatering

D. Section 02210: Earth Excavation, Backfill, Fill, and Grading

E. Section 03300: Cast-in-Place Concrete

F. Section 02509: Precast Manholes

G. Section 02615: Prestressed Concrete Cylinder Pipe Replacements

1.03 REFERENCES:

A. American Society for Testing and Materials (ASTM):

1. A36: Standard Specification for Structural Steel

2. A416: Standard Specification for Strand Steel, Uncoated Seven-Wire for Prestressed Concrete

3. A572: Standard Specification for High Strength Low-Alloy Columbium Vanadium Structural Steel

4. A722: Specification for Uncoated High-Strength Steel Bar for Prestressing Concrete

5. A615: Standard Specifications for Deformed and Plain Billet-Steel Bars for Concrete Reinforcement

B. American Wood-Preserves Association (AWPA) Standards.

C. American Welding Society (AWS) Code: D1.1.

D. Federal Standard, FS TT-W-571: Wood Preservation and Treating Practices.

E. Occupational Safety and Health Administration (OSHA) Standards and Regulations contained in Title 29: Subpart P - Excavations, Trenching and Shoring.

F. American Concrete Institute (ACI)

1. ACI 304: Recommended Practice for Measuring, Mixing, Transporting and Placing Concrete.

1.04 SUBMITTALS:

A. Submit the following in accordance with Section 01300:

1. Submit the following qualifications four (4) weeks prior to the construction:

   a. Qualifications of Contractor's temporary excavation support system designer as specified in Paragraph 1.05 G.

   b. Qualifications of Contractor's temporary excavation support system installer as specified in Paragraph 1.05 H.

   c. Qualifications of Contractor's temporary excavation support system installation supervisor as specified in Paragraph 1.05 I.

   d. Qualifications of vacuum excavation subcontractor as specified in Paragraph 1.05 F, if DMPs for utilities are utilized.

2. Submit a temporary excavation support plan stamped and signed by a Massachusetts Registered Professional Engineer at least two weeks prior to start of the construction. Do not submit design calculations. The review will be only for the information of the Owner and third parties for an overall understanding of the project relating to access, maintenance of existing facilities and proper utilization of the site. The Contractor shall remain responsible for the adequacy and safety of the means, methods, and sequencing of construction. The plan shall include the following items as a minimum:

   a. Proposed temporary excavation support system(s), details, location, layout, depths, extent of distinct types of support relative to existing features and the permanent structures to be constructed, and methods and sequence of installation and removal.

   b. Certificate of Design: Refer to Section 01300.

   c. A list of all design assumptions, including safety factors used for the temporary excavation support system(s) and all lateral pressures used for each system.

   d. Requirements of dewatering during the construction.

   e. Minimum lateral distance from the edge of the excavation support system for use for vehicles, construction equipment, and stockpiled construction and excavated materials.

   f. List of equipment used for installing the excavation support systems.

   g. Monitoring schedule, installation procedures and location plans for vibration/noise monitoring, geotechnical instrumentation (deformation

monitoring points, inclinometers, etc.) and observation wells/piezometers to monitor ground, excavation support system, adjacent structures and groundwater fluctuation during the entire construction period.

3. Submit a Construction Contingency Plan specifying the methods and procedures to maintain temporary excavation support system stability if the allowable movement of the adjacent ground and adjacent structures is exceeded.

4. Monitoring data within one (1) day of data collection from vibration and noise recording equipment, observation wells, deformation monitoring points and offset lines. Data shall include:

   a. Horizontal and vertical movements of geotechnical instruments and groundwater readings.

   b. New movements since the initial readings of the geotechnical instruments.

   c. Weekly summary in tabular and graphic form at the end of each week.

   d. A schematic plan of excavation and/or relevant construction activities at the time of monitoring.

5. For excavation support systems left in place, submit the following as-built information prior to backfilling and covering the excavation support systems:

   a. Survey locations of the temporary excavation support systems, including coordinates of the ends and points of change in direction.

   b. Type of the temporary excavation support system.

   c. Elevations of top and bottom of the excavation support systems left in place.

1.05 QUALITY ASSURANCE:

A. Provide in accordance with Section 01400 and as specified.

B. Conform to the requirements of the OSHA Standards and Interpretations: "Part 1926 Subpart P - Excavation, Trenching, and Shoring", and all other applicable laws, regulations, rules, and codes.

C. Construction operations to conform to noise regulations provided in the City of Westfield's Statute 10-31 and 10-32 and this Section.

D. Retain the services of an independent Vibration Consulting Firm meeting the requirements as specified in Section 02018.

E. The peak particle velocity for pile driving, or other vibration-inducing operations, shall meet the requirements as specified in Section 02018.

F. If utilizing deformation monitoring points (DMPs) for utilities, vacuum excavation shall be performed by subcontractor having five (5) years of experience in non-destructive vacuum excavation methods for utilities.

G. Prepare design, including calculations and drawings, under the direction of a Professional Engineer registered in Massachusetts and having the following qualifications:

1. Not less than ten (10) years experience in the design of specific temporary excavation support systems to be used.

2. Completed not less than five (5) successful temporary excavation support system projects of equal type, size, and complexity within the last five (5) years.

H. Temporary Excavation Support System Installer's Qualifications:

1. Not less than three (3) year experience in the installation of similar types and equal complexity as the proposed system.

2. Completed not less than three (3) successful excavation support systems of similar type and equal complexity as the proposed system.

I. Install all temporary excavation support systems under the supervision of a supervisor having the following qualifications:

1. Not less than five (5) years experience in installation of systems of similar type and equal complexity as the proposed system.

2. Completed at least five (5) successful temporary excavation support systems of similar type and equal complexity as the proposed system.

J. All welding shall be performed in accordance with AWS D1.1.

1.06 DESIGN CRITERIA:

A. Design of temporary excavation support systems shall meet the following minimum requirements:

1. Support systems shall be designed for earth pressures, hydrostatic pressure, equipment, temporary stockpiles, construction loads, roadways, railroads, and other surcharge loads.

2. Design a bracing system to provide sufficient reaction to maintain stability.

3. Limit movement of ground adjacent to the excavation support system to be within the allowable ground deformation as specified.

4. Design the embedment depth below bottom of excavation to minimize lateral and vertical earth movements and provide bottom stability.

5. Design temporary excavation support systems to withstand an additional 2 feet of excavation below proposed bottom of excavation without redesign except for the addition of lagging and/or bracing.

6. Maximum width of pipe trench excavation shall be as indicated on the drawings.

7. Do not cast permanent structure walls directly against excavation support walls.

8. The design location of the excavation support wall shall be determined such that the installed wall and bracing system components are all located outside the limits of the permanent structure. Construction tolerances (e.g., wall verticality) shall be considered in determining the plan location.

1.07 DELIVERY, STORAGE AND HANDLING:

A. Provide in accordance with Sections 01610 and as specified.

B. Store sheeting and bracing materials to prevent sagging which would produce permanent deformation. Keep concentrated loads which occur during stacking or lifting below the level which would produce permanent deformation of the material.

1.08 PROJECT/SITE CONDITIONS:

A. Subsurface Conditions: Refer to Section Geotechnical Data Report provided as an Appendix to these Technical Specifications.

PART 2 - PRODUCTS

2.01 MATERIALS:

A. Structural Steel: All soldier piles, wales, rakers, struts, wedges, plates, waterstop and accessory steel shapes shall conform to ASTM A36.

B. Steel Sheet Piling: ASTM A572, continuous interlocking type.

C. Timber Lagging Left in Place: Pressured treated per appropriate AWPA standards.

D. Raker Ties: ASTM A615 Grade 60.

E. Concrete: Section 03300.

F. Tamping tools adapted for backfilling voids after removal of the excavation support system.

G. Provide specific trench box sizes for each pipe and utility excavation with structural capacity of retaining soil types as described in OSHA's 29 CFR Part 1926 Subpart P.

2.02 EQUIPMENT:

A. A vibratory hammer shall be utilized for driving the temporary sheet piling providing that such operations do not exceed vibration/noise requirements of the specifications. Impact hammer shall be utilized when vibratory hammer is unable to drive temporary sheet piling to required depth and/or unable to meet vibration requirements. Impact hammer shall also meet noise requirement.

PART 3 - EXECUTION

3.01 INSTALLATION:

A. Installation of the temporary excavation support systems shall not commence until the related earth excavation and dewatering submittals have been reviewed by the Engineer with all Engineer’s comments satisfactorily addressed.

B. Install excavation support systems in accordance with the temporary excavation support plan.

C. Do not drive sheeting within 100 feet of concrete less than seven (7) days old.

D. Conduct program of temporary excavation support in such a manner as to prevent undermining or disturbing foundations of existing structures of work ongoing or previously completed.

E. Bottom of the trench box excavation support system shall be above the pipe invert prior to installing the pipe.

F. Install and read geotechnical instrumentation in accordance with the temporary excavation support plan. Notify the Engineer immediately if any geotechnical instrumentation is damaged. Repair or replace damaged geotechnical instrumentation at the sole option of the Engineer and at no additional cost to the Owner.

G. Continuously monitor movements of the ground adjacent to excavation support systems and adjacent structures. In events of the measured movements approaching or exceeding the allowable movements, take immediate steps to arrest further movement by revising procedures such as providing supplementary bracing, filling voids behind the trench box, supporting utilities or other measures (Construction Contingency Plan) as required.

H. Notify utility owners if existing utilities interfere with the temporary excavation support system. Modify the existing utility with the utility owners permission or have the utility owner make the modifications at no additional cost to Owner.

I. Care shall be taken to prevent voids outside of the excavation support system, but if voids are formed, they shall be immediately filled with select common fill or other approved materials. Voids in locations that cannot be properly compacted upon backfilling shall be filled with lean concrete or other material as approved by the Engineer.

J. If unstable material is encountered during excavation, all necessary measures shall be taken immediately to contain it in place and prevent ground displacement.

3.02 PORTABLE TRENCH BOXES

A. Portable trench boxes or sliding trench shields may be used for the protection of workers only.

B. No trench box is allowed for support of excavations that extend within the zone of influence of existing structures or utilities. The zone of influence is defined as a line extending from the edge of the foundation or spring line of pipe, then outward and downward at a slope of 1 horizontal to 1 vertical.

C. Additional excavation, backfilling, and surface restoration required as the result of trench box use shall be at no additional cost to the Owner.

D. Trench boxes or shields shall be designed, constructed, and maintained to meet acceptable engineering and industry standards.

E. Shields shall be installed in a manner to restrict lateral or other hazardous movement of the shield in the event of the application of sudden lateral loads.

F. A copy of the trench box manufacturer's specifications, recommendations, and limitations shall be in written form and maintained at the job site during all excavation work.

G. When moveable trench bracing such as trench boxes, moveable sheeting, shoring, or plates are used to support the sides of the trench, care shall be taken in placing and moving the boxes or supporting bracing to prevent movement of the pipe, or disturbance of the pipe bedding and the screened gravel backfill.

H. As trench boxes, moveable sheeting, shoring, or plates are moved, screened gravel shall be placed to fill any voids created and the screened gravel and backfill shall be recompacted to provide uniform side support for the pipe.

I. Any portion of the box extending below mid diameter of the pipe shall be raised above this point prior to moving the box ahead to install the next pipe. This is to prevent the separation of installed pipe joints due to movement of the box.

3.03 GROUND DEFORMATION ADJACENT TO EXCAVATION SUPPORT SYSTEMS:

A. Allowable Vertical (heave/settlement) and Lateral Movements: 2 inches maximum for the trench box excavation support system, and 1 inch maximum for other types of excavation support systems at any location behind the excavation support system.

B. Monitoring personnel shall use a procedure for reading and recording geotechnical instrumentation data which compares the current reading to the last reading during data collection to eliminate spurious readings.

C. Plot the observed ground deformation readings versus time. Annotate the plots with construction loading and excavation events having an impact on the readings. Evaluate plots by means of secondary rate-of-change plots to provide early warning of accelerating ground movements.

D. Notify the Engineer when the allowable ground deformation is exceeded.

E. Implement Construction Contingency Plan under direction of the temporary excavation support system designer and the Engineer.

3.04 REMOVAL OF EXCAVATION SUPPORT SYSTEM:

A. Sheeting shall be left in place unless otherwise indicated or approved in writing by the Engineer.

B. When indicated or approved by the Engineer, remove the temporary excavation support system without endangering the constructed or adjacent structures, utilities, or property. Immediately backfill all voids left or caused by withdrawal of temporary excavation support systems with bank-run gravel, screened gravel or select borrow by tamping with tools specifically adapted for that purpose.

C. The excavation support system left-in-place shall be cut-off a minimum of 2 feet below the bottom of the next higher foundation level or a minimum of 5 feet below finished grade.

D. Conduct survey of the locations and final cut-off elevations of the excavation support systems left in place.

3.05 REMOVAL OF EARTH RETENTION SYSTEM

A. When indicated or approved by the Engineer, remove the temporary excavation support system without endangering the constructed or adjacent structures, utilities, or property.

Immediately backfill all voids left or caused by withdrawal of temporary excavation support systems with bank-run gravel, screened gravel or select borrow by tamping with tools specifically adapted for that purpose.

B. Backfilling shall progress together with the removal of support systems from excavations.

3.06 CONTRACT CLOSEOUT:

A. Provide in accordance with Section 01700.

END OF SECTION

SECTION 02210

EARTH EXCAVATION, BACKFILL, FILL AND GRADING

PART 1 - GENERAL

1.01 DESCRIPTION:

A. Perform the following earth excavation, backfill, fill and grading as indicated or specified:

1. Make excavations to accommodate piping, conduits, foundations, vaults, and other structures.

2. Provide materials for backfilling excavations and constructing embankments and fills as indicated and specified.

3. Construct embankments of compacted materials.

4. Grade surfaces to meet finished grades indicated.

5. Immediately notify the Engineer if suspected hazardous materials are encountered and cease operations in that part of work.

6. Remove boulders within the excavation limits.

1.02 RELATED WORK:

A. Section 01110: Environmental Protection Procedures

B. Section 01568: Erosion Control, Sedimentation and Containment of Construction Materials.

C. Section 02100: Site Preparation

D. Section 02140: Dewatering

E. Section 02160: Temporary Excavation Support Systems

F. Section 02211: Rock Excavation and Disposal

G. Section 02212: Controlled Low Strength Material (CLSM)

H. Section 02223: Screened Gravel

I. Section 02224: Bank-run Gravel

J. Section 02225: Select Borrow

K. Section 02273: Geotextile Fabric

L. Section 02317: Granular Materials

M. Section 02435: Crushed Stone

N. Section 03300: Cast-in-Place Concrete

1.03 REFERENCES:

A. American Society for Testing and Materials (ASTM) Publications:

1. C33: Specification for Concrete Aggregates.

2. C136: Sieve Analysis of Fine and Coarse Aggregates.

3. D421: Practice for Dry Preparation of Soil Samples for Particle Size Analysis and Determination of Soil Constants.

4. D1140: Test Method for Amount of Material in Soils Finer than the No. 200 (75 um) Sieve in Soils by Washing.

5. D1556: Test Method for Density and Unit Weight of Soil in Place by the Sand-Cone Method.

6. D1557: Test Method for Laboratory Compaction Characteristics of Soil Using Modified Effort (56,000 ft-lb/ft^3).

7. D2167: Test Method for Density and Unit Weight of Soil in Place by the Rubber Balloon Method.

8. D4318: Test Method for Liquid Limit, Plastic Limit and Plasticity Index of Soils.

9. D4718: Practice for Correction of Unit Weight and Water Content for Soils Containing Oversized Particles.

10. D4944: Test Method for Field Determination of Water (Moisture) Content of Soil by the Calcium Carbide Pressure Tester Method.

11. D4959: Standard Test Method for Determination of Water (Moisture) Content of Soil by Direct Heating Method.

12. D5080: Standard Test Method for Rapid Determination of Percent Compaction.

13. D6913: Standard Test Methods for Particle-Size Distribution (Gradation) of Soils Using Sieve Analysis

14. D6938: Standard Test method for In-Place Density and Water Content of Soil and Soil-Aggregate by nuclear Methods (Shallow Depth)

15. D7928: Test Methods for Particle-Size Distribution (Gradation) of Fine-Grained Soils Using the Sedimentation (Hydrometer) Analysis

B. Occupational Safety and Health Administration (OSHA) Standards and Regulations contained in Title 29: Subpart P - Excavations, Trenching and Shoring.

1.04 DEFINITIONS:

A. Percentage of compaction is defined as the ratio of the field dry density, as determined by ASTM D1556 to the maximum dry density determined by ASTM D1557 Procedure C, multiplied by 100.

B. Proof Roll: Compaction with a minimum of 4 passes of a vibratory steel drum or rubber tire roller. Vibratory plate compactors shall be used in small areas where vibratory steel drum or rubber tire roller cannot be used.

C. Acceptable Material: Material which does not contain organic silt or organic clay, peat, vegetation, wood or roots, stones, or rock fragments over 6-inch in diameter, porous biodegradable matter, loose or soft fill, excavated pavement, construction debris, or refuse. Stones or rock fragments shall not exceed 40 percent by weight of the backfill material.

D. Unacceptable Materials: Materials that do not comply with the requirements for the acceptable material or which cannot be compacted to the specified or indicated density.

1.05 SUBMITTALS:

A. Submit the following in accordance with Section 01300:

1. Qualifications of the Contractor's Independent Testing Laboratory as specified in Paragraph 1.06 H, four (4) weeks prior to the execution of any earth excavation, backfilling, filling, or compaction process.

2. Submit an excavation, backfilling, and filling plan at least two weeks prior to start of any earth moving activities. The review will be only for the information of the Owner and third parties for an overall understanding of the project relating to access, maintenance of existing facilities and proper utilization of the

site. The Contractor shall remain responsible for the adequacy and safety of the means, methods, and sequencing of construction. The plan shall include, but not be limited to the following items:

a. Detailed sequence of work.

b. General description of construction methods.

c. Numbers, types, and sizes of equipment proposed to perform excavation and compaction.

d. Details of dust control measures.

e. Proposed locations of stockpiled excavation and/or backfill materials.

f. Proposed surplus excavated material off-site disposal areas and required permits.

g. Gradation analysis.

h. Materials Sources: Name of source, location, date of sample, sieve analysis, and laboratory compaction characteristics.

i. Test and Evaluation Reports:

(1) Field density testing reports: Provide results from field density testing of prepared subgrade and compacted fill.

(2) Grain-size analysis.

(3) Laboratory compaction characteristics of soils.

(4) Water content.

j. Compaction method

k. Details of erosion and sedimentation control measures which will prevent erosion and sedimentation during the earth moving activities.

3. The following material submittals shall be submitted to the Engineer prior to backfilling and filling:

a. Granular Fill and Sand as specified herein.

b. Controlled Low Strength Material (CLSM): As specified in Section 02212.

c. Screened Gravel: As specified in Section 02223.

d. Bank-run Gravel: As specified in Section 02224.

e. Select Borrow: As specified in Section 02225.

f. Crushed Stone: As specified in Section 02435.

g. Other Acceptable Materials: Laboratory testing results of gradation and moisture-density relationship. Submittal shall include specific location of the source and the date when sample was taken.

4. During Construction, submit written confirmation of fill lift thickness, in-place soil moisture content, and percentage of compaction to the Engineer before placing the next lift or constructing foundations.

1.06 QUALITY ASSURANCE AND CONTROL:

A. Provide in accordance with Section 01400 and as specified.

B. Dewatering and Groundwater Control: Provide and maintain as specified in Section 02140.

C. Excavations shall be performed in the dry, and kept free from water, snow, and ice during construction. Bedding and backfill material shall not be placed in water. Water shall not be allowed to rise upon or flow over the bedding and backfill material.

D. Temporary Excavation Support Systems: Provide and maintain as specified in Section 02160.

E. The Contractor shall be solely responsible for making all excavations in a safe manner. All excavation, trenching, and related sheeting, bracing, etc. shall comply with the requirements of OSHA excavation safety standards (29 CFR Part 1926 Subpart P) and State requirements. Where conflict between OSHA and State regulations exists, the more stringent requirements shall apply.

F. Do not excavate, construct embankments, or fill until all the required submittals have been reviewed by the Engineer.

G. Formulate excavation, backfilling, and filling schedule and procedures to eliminate possibility of undermining or disturbing foundations of partially and completed structures, pipelines and embankments or existing structures and pipelines.

H. Employ an independent testing laboratory to perform particle size and gradation analyses in accordance with ASTM D6913, ASTM D7928, and to determine compactibility in accordance with ASTM D1557 for all the proposed backfill and fill materials and monitoring field compaction operations. The Contractor's independent testing laboratory

shall have the following qualifications:

1. Be accredited by the American Associates of State Highway and Transportation Officials (AASHTO) Accreditation Program.

2. Have three (3) years experience in sampling, testing and analysis of soil and aggregates, and monitoring field compaction operations.

3. Able to provide three (3) references from previous work.

I. Field Testing and Inspections:

1. By Contractor's independent testing laboratory, acceptable to the Engineer, at Contractor's expense as specified in Paragraph 1.06 K.

2. Location of tests mutually acceptable to testing laboratory and the Engineer or as directed by the Engineer.

3. In the event compacted material does not meet specified in-place density, recompact material and retest this area until specified results are obtained at no additional to the Owner.

4. Contractor's testing laboratory to perform inspection at least once daily to confirm lift thickness and compaction effort for entire fill area.

5. Owner may retain the services of an independent testing laboratory to conduct confirmatory testing and inspection.

J. Methods of Field Testing:

1. In-Place Density: ASTM D1556, ASTM D2167, or ASTM D6938.

2. In-Place Moisture Content: ASTM D6938, ASTM D4944, or ASTM D4959.

K. Material Testing Frequency: The following testing frequencies are minimum required for all structural and non-structural fill, grading and embankment.

1. Field In-Place Density and Moisture Content - Screened gravel and crushed stone shall be compacted as specified and indicated. For other backfill and fill materials, minimum test frequency shall be as follows, and no less than one test per:

a. Trenches under structures foundation preparation or roadways subbase: Every 1000 lin. ft. per lift.

b. Trenches in areas without structures or roadways: Every 1000 lin. ft. per alternate lift.

c. Paved Roadways: Every 200 lin. ft. per lift.

d. Paved Areas: 3,500 sq. ft. per lift.

e. Under Structure: 1,000 sq. ft. per lift.

f. Around Structures: 1,500 sq. ft. per lift.

g. Embankment Fills: 10,000 sq. ft. per lift.

2. Moisture Density - One per source, except for screened gravel and crushed stone. Repeat the moisture density test for every 5,000 cubic yard of material use, and whenever visual inspection indicates a change in material gradation as determined by the Engineer.

3. Gradation Analysis - A minimum of one per source and for each moisture density test and whenever visual inspection indicates a change in material gradation.

4. Liquid Limit, Plastic Limit and Plasticity Index - Minimum of one test per 5,000 cubic yards of soil for use as fill material and whenever classification of material is in doubt as determined by the Engineer.

5. Owner's testing laboratory may conduct confirmatory testing at a minimum frequency of 25% of the specified frequencies in paragraph 1.06.L, or as directed by Owner's Engineer.

L. Construction Tolerances:

1. Construct finished surfaces to plus or minus 1 inch of the elevations indicated.

2. Grade cut and fill areas to plus or minus 0.20 foot of the grades indicated.

3. Complete embankment edges to plus or minus 6 inches of the slope lines indicated.

4. Provide the Engineer with adequate survey information to verify compliance with above tolerances.

M. Cut pavement with a saw or pneumatic tools to prevent damage to remaining pavement without extra compensation. Where pavement is removed in large pieces, dispose of pieces before proceeding with excavation.

N. Pipes, drains, and other utilities may exist in certain locations not indicated on drawings. No attempt has been made to show all services. Completeness or accuracy of information given is not guaranteed.

O. Dig test pits considered as incidental to the normal excavation as indicated and specified in this Section, at no additional compensation.

P. Carefully support and protect from damage, existing pipes, poles, wires, fences, curbings, property line markers, and other structures, which the Engineer determines must be preserved in place without being temporarily or permanently relocated. Should such items be damaged, restore without compensation therefore, to at least as good condition as that in which they were found immediately before the work was begun.

Q. Whenever certain existing structures, as described below, are encountered, and the Engineer so directs, change the location, remove, and later restore, or replace such structures, or assist the Owner in doing so. Such work to be paid for under applicable items of work, otherwise as Extra Work.

R. In removing existing pipes or other structures, include for payment only those new materials which are necessary to replace those unavoidably damaged as determined by the Engineer.

S. The preceding two paragraphs apply to pipes, wires, and other structures which meet the following: (a) are not indicated on the drawings or otherwise provided for, (b) encroach upon or are encountered near and substantially parallel to the edge of the excavation, and (c) in the opinion of the Engineer, will impede progress to such an extent that satisfactory construction cannot proceed until they have been changed in location, removed (to be later restored), or replaced.

T. Restore existing property or structures as promptly as practicable.

U. If material unacceptable for foundation (in the opinion of the Engineer) is found at or below the grade to which excavation would normally be carried in accordance with the drawings and/or specifications, remove such material to the required width and depth as directed by the Engineer and replace it with screened gravel, select borrow, or concrete.

V. Do not remove excavation materials from the site of the work or dispose of except as directed or permitted by the Engineer.

W. Haul away and dispose of surplus excavated materials at locations directed by the Engineer at no additional cost to the Owner.

X. During progress of work, conduct earth moving operations and maintain work site so as to minimize the creation and dispersion of dust. Furnish and spread calcium chloride if the Engineer decides that it is necessary for more effective dust control.

Y. Provide suitable and safe bridges and other crossings where required for accommodation of travel, and to provide access to private property during construction, and remove said structures thereafter.

1.07 SITE CONDITIONS:

A. Subsurface Conditions: Refer to Geotechnical Data Report provided as Appendix A and Section 02023.

PART 2 - PRODUCTS

2.01 GENERAL:

A. Use only acceptable materials from excavations or borrows.

2.01 GRANULAR MATERIALS:

A. Granular Fill

Densely Graded: Bank-Run Gravel with the following properties.

Gradation:

Densely Graded	
Sieve Designation (Square Mesh)	Percentage Passing (By Weight)
[6 inches (150 mm)]	[100]
[2 inches (50 mm)]	[80-100]
[No. 4 (4.75 mm)]	[20-65]
[No. 50 (300 micrometers)]	[10-25]
[No. 200 (75 micrometers)]	[0-12]

Open Graded: Screened Gravel or Crushed Stone: ASTM C33, Coarse Aggregate, No. 67. Soil particles shall conform to the physical property requirements of ASTM C33.

B. Sand

1. Aggregate for sand shall consist of clean, inert, hard, durable grains of quartz or other hard durable rocks and free from vegetable matter, lumps or balls of clay and other deleterious substances.

2. Sand shall confirm to ASTM C33 for fine aggregate.

3. The gradation shall meet the grading requirements of the following table:

Sieve Designation (Square Mesh)	Percent Passing (By Weight)
[1/2 inch (12.5 mm)]	[100]
[3/8 inch (9.5 mm)]	[85 to 100]
[No. 4 (4.75 mm)]	[60 to 100]
[No. 16 (1.18 mm)]	[35 to 80]
[No. 50 (0.30 mm)]	[10 to 55]
[No. 200 (0.075 mm)]	[2 to 10]

C. Provide 1,500 psi concrete, controlled low strength material (CLSM), screened gravel, bank-run gravel, fine aggregate, select borrow, and crushed stone in accordance with Specification Sections referenced herein.

D. Provide Fine Aggregate conforming to ASTM C33.

E. Provide erosion/sedimentation control devices as indicated, including geotextile fabric in accordance with Sections 02273, 01110, and 01568.

F. Provide geotextile fabric as indicated, meeting the requirements and conforming to Section 02273.

2.02 EQUIPMENT:

A. The compaction equipment shall be selected by the Contractor and shall be capable of consistently achieving the specified compaction requirements. The selected compaction equipment shall meet the following minimum requirements:

1. Manually operated vibratory plate compactors weighing no less than 200 pounds with vibration frequency no less than 1600 cycles per minute.

2. Vibratory steel drum or rubber tire roller weighing at least 12,000 pounds.

PART 3 - EXECUTION

3.01 SITE MAINTENANCE:

A. Roadway and Site Leveling: Grade roadway and site as to maintain them in a level unrutted condition and to eliminate puddling of surface and subsurface water.

3.02 EXCAVATION:

A. Execution of any earth excavation shall not commence until the related dewatering, excavation support systems, and backfill and fill materials submittals are reviewed by the Engineer and all Engineer's comments satisfactorily addressed.

B. Carry out program of excavation, dewatering, and excavation support systems to eliminate possibility of undermining or disturbing foundations of existing structures or of work previously completed under this contract.

C. Excavate to widths that give suitable room for building structures or laying and jointing piping.

D. Do not plow, scrape, or dig by machinery near to finished subgrade in a manner that would result in disturbance of subgrade.

E. Excavate to lines and grades indicated in an orderly and continuous program.

F. Establish limits of excavation to allow adequate working space for installing forms and for safety of personnel.

G. Excavate to elevations indicated, or deeper, as directed by the Engineer, to remove unacceptable bottom material.

H. Exercise care to preserve material below and beyond the lines of excavations.

I. Place excavated material at the approved stockpile locations and in no case closer than 3 feet from edge of excavations to prevent cave-ins of bank slides.

J. Regard small, less than one cubic yard, boulders, rock fragments, and concrete encountered during excavation as a normal part of in-place soils and not included for payment as rock.

K. Excavate for depressed foundations, where mat foundations are indicated as depressed. Sheet and shore existing ground so that adjacent sections of foundation mat will rest on undisturbed ground as indicated. Installation of sheeting shall be in accordance with Section 02160.

3.03 SEPARATION OF EXCAVATED MATERIALS FOR REUSE:

A. Remove only existing pavement that is necessary for prosecution of work.

B. Carefully remove loam and topsoil from excavated areas. Store separately for further use or furnish equivalent loam and topsoil as directed.

C. Carefully remove acceptable material from excavated areas and store separately for further use as backfill material.

3.04 TRENCH EXCAVATION:

A. When pipe is to be laid in gravel bedding or concrete cradle, excavate trench by machinery to, or just below designated subgrade. If material remaining at bottom of trench is disturbed, recompaction shall be required.

B. When pipe is to be laid directly on bottom of trench, do not excavate lower part of trenches by machinery to subgrade. Remove remainder of material to be excavated just before placing of pipe by use of hand tools. Form a flat or shaped bottom, true to grade, so pipe will have a uniform and continuous bearing. Support on firm and undisturbed material between joints, except for limited areas where use of pipe slings have disturbed bottom.

3.05 DEPTH OF TRENCH:

A. Excavate trenches to depths so as to permit pipe to be laid at elevations, slopes, or depths of cover indicated on drawings, and at uniform slopes between indicated elevations.

3.06 WIDTH OF TRENCH:

A. Make pipe trenches as narrow as practicable and do not widen by scraping or loosening materials from the sides. Make every effort to maintain sides of trenches firm and undisturbed until backfilling has been placed and compacted.

B. Excavate trenches with approximately vertical sides between springline of pipe and elevation 1 ft. above top of pipe.

3.07 TRENCH EXCAVATION IN FILL:

A. Place and compact material to top of fill or to a minimum height of 1 ft. above top of pipe, whichever is less, when pipe is to be laid in embankment or other recently filled material. Take particular care to ensure maximum consolidation of material under pipe location. Excavate pipe trench as though in undisturbed material.

3.08 EXCAVATION NEAR EXISTING STRUCTURES:

A. Discontinue digging by machinery when excavation approaches pipes, conduits, or other underground structures. Continue excavation by use of hand tools. Include such manual excavation in work to be done when incidental to normal excavation and under items involving normal excavation.

B. Excavate test pits when determination of exact location of pipe or other underground structure is necessary for doing work properly.

3.09 REMOVAL OF SUBSURFACE OBSTRUCTIONS:

A. Remove indicated subsurface structures and related obstructions to extent shown.

B. Promptly notify the Engineer when any unexpected subsurface facilities are encountered during excavation such as utility lines and appurtenances, walls, and foundations.

3.10 UNAUTHORIZED EXCAVATION:

A. When the bottom of any excavation for structures is taken out beyond limits indicated or specified, backfill, with screened gravel and crushed stone wrapped with non-woven geotextile fabric or with 1,500 psi concrete.

3.11 REUSE AND DISPOSAL OF SURPLUS EXCAVATED MATERIALS:

A. Reuse surplus acceptable excavated materials for backfill; deposit neatly and grade so as to make or widen fills, flatten side slopes, or fill depressions; or legally dispose off-site; all as directed or permitted and without additional compensation.

3.12 SUBGRADE PREPARATION AND PROTECTION:

A. Remove loam and topsoil, loose vegetable matter, stumps, and large roots from areas upon which embankments will be built or material will be placed for grading. Shape subgrade as indicated on drawings, and prepare by forking, furrowing, or plowing so that the first layer of new material placed thereon will be well bonded to it.

B. As directed by the Engineer, overexcavate unacceptable materials below the foundation subgrade. Backfill the overexcavation with compacted screened gravel or crushed stone wrapped with nonwoven geotextile fabric. In no case shall the screened gravel be placed directly on the exposed subgrade prior to placing the geotextile fabric.

C. Proof roll the foundation subgrade prior to backfilling and filling operation or placing foundation concrete.

D. Proof roll the pipe trench foundation subgrade prior to backfilling and filling operation, or placing soil-supported pipeline.

E. Utilize excavating equipment equipped with a toothless or smooth edged, excavating bucket to expose the pipe trench foundation subgrade to avoid disturbance of the bearing surface. Tamp the exposed subgrade with the excavating bucket prior to backfilling and filling operation or placing soil-supported pipeline.

3.13 CARE AND RESTORATION OF PROPERTY:

A. Enclose uncut tree trunks adjacent to work in wooden boxes of such height as may be necessary for protection from injury from piled material, equipment, operations, or otherwise due to work. Operate excavating machinery and cranes of suitable type with

care to prevent injury to trees not to be cut and particularly to overhanging branches and limbs.

B. Cut all branches, limbs, and roots smoothly and neatly without splitting or crushing. Neatly trim, cut the injured portions and cover with an application of grafting wax or tree healing paint as directed.

C. Protect cultivated hedges, shrubs, and plants which might be injured by the Contractor's operations by suitable means or dig up and temporarily replant and maintain. After construction operations have been substantially completed, replant in original positions and care for until growth is reestablished. If cultivated hedges, shrubs, and plants are injured to such a degree as to affect their growth or diminish in their beauty or usefulness, replace by items of equal kind and quality existing at the start of the work.

D. Do not use or operate tractors, bulldozers, or other power-operated equipment on paved surfaces when their treads or wheels of which are so shaped as to cut or otherwise damage such surfaces.

E. Restore surfaces damaged by the Contractor's operations to a condition at least equal to that in which they were found immediately before work commenced. Use suitable materials and methods for such restoration.

3.14 BACKFILLING - GENERAL:

A. Do not place frozen materials in backfill or place backfill upon frozen material. Remove previously frozen material or treat before new backfill is placed.

B. Do not place, spread, roll, or compact fill material during unfavorable weather conditions. If interrupted by heavy rain or other unfavorable conditions, do not resume until ascertaining that the moisture content and density of the previously placed soil are as specified.

C. Do not use puddling, ponding, or flooding as a means of compaction.

3.15 MATERIAL PLACEMENT AND COMPACTION REQUIREMENTS:

A. Select Borrow, and Fine Aggregate:

1. Dump and spread in layers not to exceed 8-in. uncompacted thickness.

2. Compact, fill and backfill under structure and bedding for pipes (from below pipe to spring line) as indicated but to not less than 95 percent. Compact to not less than 90 percent in other areas unless otherwise indicated.

B. Screened Gravel and Crushed Stone:

1. Dump and spread in layers not to exceed 8-in. uncompacted thickness.

2. Compact using self-propelled vibratory steel drum or rubber tire rollers with a minimum of 4 passes in directions perpendicular to one another in open areas. In small areas, use manually operated vibratory plate compactors with a minimum of 4 passes.

C. Bank-run Gravel and Acceptable materials for use as non-structural fill:

1. Dump and spread in layers not to exceed 12-in. uncompacted thickness.

2. Compact to not less than 90 percent unless otherwise indicated.

D. Backfilling and filling operation shall be suspended in areas where tests are being made until tests are completed and the testing laboratory has advised the Engineer that adequate densities are obtained.

3.16 STRUCTURAL FILL AND BACKFILL UNDER STRUCTURES:

A. Compact fill and backfill under structures and pavements with screened gravel, crushed stone, select borrow, or fine aggregate as specified and indicated.

3.17 NON-STRUCTURAL BACKFILL AROUND STRUCTURES:

A. Use acceptable materials for non-structural backfill around structures and compacted as specified and indicated.

B. Conduct hydraulic testing as soon as practicable after structures are constructed and other necessary work has been done. Start backfilling promptly after completion of tests.

C. Deposit material evenly around structure to avoid unequal soil pressure.

D. Do not place backfill against or on structures until they have attained sufficient strength to support the loads (including construction loads) to which they will be subjected, without distortion, cracking, or other damage.

3.18 BACKFILLING PIPE TRENCHES:

A. General:

1. Begin backfilling and proceed until completed after the pipes and conduits have been laid, joints have acquired maximum degree of hardness, pipelines and conduits have successfully passed tests and inspections as required in the Specifications, and concrete or masonry structures within the trench have reached their design strength to support all loads.

2. Backfill and compact indicated material under, around, and above pipes, conduits, and other structures to the indicated or specified compaction density requirement. Utilize compaction devices which will not damage the pipe, conduit, or structure within the trench.

3. Do not drop backfill material into trench from a height of more than 5 ft., or in a manner which will damage the pipe, conduit, or other structure within trench.

B. Pipe Trenches:

1. Materials:

a. From below pipe to 1 ft. above top of pipe: Use screened gravel, or crushed stone, or controlled low strength material (CLSM), unless otherwise indicated.

b. One foot above top of pipe to finished grade or to pavement subbase: Use bank-run gravel or acceptable materials, unless otherwise indicated.

2. Compacting Around Pipes: Compact material around circumference of pipe and the area between the trench wall and the pipe by hand tamping in 6 inches layers.

3. Compacting Above Pipe: Compact material by hand tamping. If trench width is wide enough to accommodate power tools and the compacted material over the pipe will support the load of the power tools without damage to the pipe, use rollers or other powered compaction equipment able to more readily achieve compaction requirements.

3.19 MATERIAL FOR FILLING AND EMBANKMENTS:

A. Use acceptable materials for filling and building embankments unless otherwise indicated.

3.20 PLACING AND COMPACTING EMBANKMENT MATERIAL:

A. Compact fill material as specified and indicated.

B. Perform fill operation in an orderly and systematic manner using equipment in proper sequence to meet the specified compaction requirements.

C. Place fill on surfaces which are free of unacceptable materials.

D. Begin filling in lowest section of work area. Grade surface of fill approximately horizontal but provide with sufficient longitudinal and transverse slope to allow for runoff of surface water from every point.

E. Conduct filling so that no obstruction to drainage from other sections of fill area is created at any time.

F. Install temporary dewatering sumps in low areas during filling operation where excessive amounts of rain runoff collect.

G. Reduce moisture content of fill material, if necessary, in source area by working it over under warm and dry atmospheric conditions. A large disc harrow with two to three foot diameter disks may be required for working soil in a drying operation.

H. Compact uniformly throughout. Keep surfaces of fill reasonably smooth and free from humps and hollows which would prevent proper and uniform compaction. Do not permit hauling equipment to follow a single track on the same layer but direct equipment to spread out to prevent overcompaction in localized areas. Take care in obtaining thorough compaction at edges of fill.

I. Slightly slope surface of fill to ensure drainage during periods of wet weather. Do not place fill while rain is falling or after a rainstorm until the Engineer considers conditions satisfactory. During such periods and upon suspension of filling operations for any period in excess of 12 hours, roll smooth the surface of fill using a smooth wheel static roller to prevent excessive absorption of rainfall and surface moisture. Prior to resuming compaction operations, remove muddy material off surface to expose firm, compacted material, as determined by the Engineer.

J. When fill is placed against an earlier fill or against in-situ material under and around structures, including around piping beneath structures or embankments, slope junction between two sections of fill, 1 vertical to 1.5 horizontal. Bench edge of existing fill 24-in. to form a serrated edge of compact stable material against which to place the new fill. Ensure that rolling extends over junction between fills.

K. When fill is placed directly upon another older fill, clean surface thoroughly of debris and remove any loose material. Then proof roll the entire old surface.

L. After spreading each loose lift to the required thickness and adjusting its moisture content as necessary, roll with sufficient number of passes to obtain the required compaction. One pass is defined as the required number of successive trips which by means of sufficient overlap will insure complete coverage and uniform compaction of an entire lift. Do not make additional passes until previous pass has been completed.

M. In case material of any fill sinks and weaves under roller or under hauling units and other equipment, required degree of compaction is not being obtained. Reduce the moisture content. If such sinking and weaving produces surface cracks, suspend operations on that part of the embankment until it becomes sufficiently stabilized. Ideal condition in fill is that attained when the entire fill below the surface being rolled is so firm and hard as to show only the slightest weaving and deflection as roller passes. Spread out rolling

operations over the maximum practicable area to minimize condition of sinking and weaving.

N. If because of defective workmanship, compaction obtained over any area is less than that required, remedy condition at no cost to Owner. If additional rolling or other means fail to produce satisfactory results, remove material in that area down to a level of satisfactory density. Perform removal, replacement, and rerolling without additional compensation.

3.21 COMPACTION CONTROL OF BACKFILL, FILL, AND EMBANKMENT:

A. Compact to density specified and indicated for various types of material. Control moisture content of material being placed as specified or if not specified, at a level slightly lower than optimum.

B. The soil testing laboratory shall provide inspection during filling or backfilling operations to ensure compaction of screened gravel or crushed stone and record compaction equipment in use.

C. Moisture control may be required either at the stockpile area, pits, or on embankment or backfill. Increase moisture content when material is too dry by sprinkling or other means of wetting uniformly. Reduce moisture content when material is too wet by using ditches, pumps, drainage wells, or other devices and by exposing the greatest possible area to sun and air in conjunction with harrowing, plowing, spreading of material or any other effective methods.

3.22 ALLOWANCE FOR SHRINKAGE:

A. Build embankments or backfill to a height above finished grade which will, in the opinion of the Engineer, allow for the shrinkage or consolidation of material. Initially, provide at all points, an excess of at least one percent of total height of backfill measured from stripped surface to top of finished surface.

B. Supply specified materials and build up low places as directed, without additional cost if embankment or backfilling settles so as to be below the indicated level for proposed finished surface at any time before final acceptance of the work.

3.23 CONTRACT CLOSEOUT

A. Provide in accordance with Section 01700.

END OF SECTION

SECTION 02211

ROCK EXCAVATION AND DISPOSAL

PART 1 - GENERAL

1.01 DESCRIPTION:

A. Remove and dispose of rock, as defined in Section 01151, Measurement and Payment, and furnish acceptable material for backfill in place of excavated rock as indicated. **Blasting and the use of explosives are prohibited.**

B. Rock excavation shall be performed by any of the following methods typically used in the construction industry:

1. Expansive agents or tools.

2. Mechanical means.

3. Combinations of the above.

1.02 RELATED WORK:

A. Section 02018: Vibration Monitoring

B. Section 02210: Earth Excavation, Backfill, Fill and Grading

C. Section 02160: Temporary Excavation Support Systems

D. Section 02223: Screened Gravel

E. Section 03300: Cast-in-Place Concrete

1.03 SUBMITTALS:

A. Submit the following in accordance with Section 01300:

1. Specifications for each kind of drilling equipment, mechanical equipment, tools and all materials to be used.

2. Material safety data sheets and manufacturers instructions for all expansive agents to be utilized.

1.04 QUALITY ASSURANCE:

A. Perform work conforming to Section 02210 for the following:

1. Backfilling above normal depth.

2. Disposal of surplus excavated rock.

3. Filling excess excavation above indicated elevations.

4. Filling excess excavations other than in rock beneath foundations.

B. If rock is excavated beyond the limits of payment indicated on the drawings, specified, or authorized in writing by the Engineer, backfill excess excavation, whether resulting from over breakage or other causes, at no additional compensation and as specified in Part 3 - EXECUTION.

C. Require the vibration consultant to perform continuous monitoring of drilling and mechanical rock removal operations. Monitor with a minimum of two 3-component seismometers that record the entire particle velocity wave train and not just peak velocities. Obtain accurate, legible seismometer records of monitored mechanical rock excavation. Submit one copy of records to the Engineer daily.

D. If evidence of disturbance or damage to utilities, equipment, buildings, or structures is observed or reported, immediately notify the Engineer and discontinue operations and require vibration consultant to recommend revised excavation procedures.

E. Initiate the revised procedures before any work is continued.

F. Restore or replace utilities, equipment, buildings, or structures damaged by operations at no cost to the Owner.

1.05 SAFETY REQUIREMENTS:

A. Conduct operations with all possible care to avoid injury to persons and property. Avoid excessive cracking of rock upon or against which any structure will be built. Prevent injury to existing pipes, structures, and property above or below ground.

1.06 JOBSITE CONDITIONS:

A. Protect structures, underground utilities, and other construction from damage caused by rock excavation operation.

B. Refer to Geotechnical Data Report provided as Appendix A.

PART 2 - PRODUCTS

2.01 CONCRETE AND GRAVEL:

A. Class A Concrete, Class B Concrete and Screened Gravel.

PART 3 - EXECUTION

3.01 ROCK REMOVAL – MECHANICAL METHODS:

A. Excavate and remove rock by the mechanical methods.

1. Drill holes and utilize expansive agents, tools or wedges, mechanical disintegration compound to fracture rock.

B. Cut away rock at bottom of excavation to form level bearing.

C. Remove shaled layers to provide sound and unshattered base for footings and foundations.

D. In utility trenches, excavate to 6 inch below invert elevation of pipe and 24 inch wider than pipe diameter.

E. Remove excavated materials from site and reuse for site landscaping.

F. Correct unauthorized rock removal in accordance with backfilling and compacting requirements of Section 02210 with lean concrete fill in accordance with Section 03300 as specified.

3.02 PROCEDURE:

A. Excavate rock in pipe trenches to no less than 6 in. below the proposed invert of the pipe. Backfill trench, before pipe is laid, to correct subgrade. Use thoroughly compacted, suitable material or, when so specified or indicated on drawings, same material as required for bedding pipe. Furnish and place at no additional compensation.

B. Fill excess excavation below elevation of the top of bedding, cradle, or envelope when in pipe trenches with material of same type and placed and compacted in same manner as specified for bedding, cradle, or envelope.

C. At option of Contractor, fill excess excavation in rock beneath foundations with Class A or Class B concrete.

D. Remove shattered rock. If rock below normal depth is shattered due to drilling or mechanical operations of Contractor and Engineer considers such shattered rock to be unfit for foundations, remove it and backfill excavation with concrete as required, except that in pipe trenches, use screened gravel for backfill. Do such removal and backfilling at no additional compensation.

E. Remove dirt and loose rock, as directed, from designated areas and clean surface of rock thoroughly, using steam to melt snow and ice, if necessary. Remove water in depressions, so that whole surface of designated area can be inspected to determine whether seams or other defects exist.

F. Rough surfaces of rock foundations sufficiently to bond well with masonry and embankments to be built thereon and, if required, cut to rough benches or steps.

G. Remove from the rock surface to remain all vegetation, dirt, sand, clay, boulders, scale, excessively cracked rock, loose fragments, ice, snow, and other objectionable substances. Use picking, barring, wedging, streams of water under sufficient pressure, stiff brushes, hammers, steam jets, and other effective means to accomplish this cleaning, and remove free water left on the surface of rock. Perform all of the above before any masonry or embankment is built on or against rock.

H. Remove piles of boulders or loose rock encountered within limits of earth embankments to a suitable place of disposal.

I. Use excavated rock in backfilling trenches subject to following limitations:

1. Do not use pieces of rock larger than permitted under subsection "Backfilling Pipe Trenches" of Section 02210.

2. Do not allow rock quantities used in backfill in any location to result in formation of voids.

3. Do not place rock backfill within 16 in. of surface of finished grade.

J. Backfill with material obtained from outside sources at no additional compensation when material suitable for backfilling is not available in sufficient quantity from other excavations.

3.02 CONTRACT CLOSEOUT:

A. Provide in accordance with Section 01700.

END OF SECTION

SECTION 02212

CONTROLLED LOW STRENGTH MATERIAL (CLSM)

PART 1 - GENERAL

1.01 DESCRIPTION:

A. Provide and install controlled low strength material as indicated and specified.

1.02 RELATED WORK:

A. Section 02210: Excavation, Fill, Backfill, and Grading

1.03 REFERENCES:

A. American Concrete Institute (ACI):

1. ACI 211.1: Standard Practice for Selecting Proportions for Normal, Heavyweight, and Mass Concrete

2. ACI 229R: Controlled Low-Strength Materials

3. ACI 304R: Guide for Measuring, Mixing, Transporting and Placing Concrete

B. ASTM International (ASTM):

1. C 31: Standard Practice for Making and Curing Concrete Test Specimens in the Field

2. C 33: Standard Specification for Concrete Aggregates

3. C 39: Standard Test Method for Compressive Strength of Cylindrical Concrete Specimens

4. C 94: Standard Specification for Ready-Mixed Concrete

5. C 138: Standard Test Method for Unit Weight, Yield, and Air Content (Gravimetric) of Concrete

6. C 143: Standard Test Method for Slump of Hydraulic Cement Concrete

7. C 150: Standard Specification for Portland Cement

8. C 494: Standard Specification for Chemical Admixtures for Concrete

9. C 595: Standard Specification for Blended Hydraulic Cements

10. C 940: Standard Test Method for Expansion and Bleeding of Freshly Mixed Grouts for Preplaced-Aggregate Concrete in the Laboratory

11. C 618: Standard Specification for Coal Fly Ash and Raw or Calcined Natural Pozzolan for Use as a Mineral Admixture in Portland Cement Concrete

12. D 6103: Test Method for Flow Consistency of Controlled Low Strength Material

1.04 SUBMITTALS:

A. Shop Drawings: Submit the following in accordance with Section 01300:

1. CLSM mix design and results of strength tests from trial mixes by the Contractor's testing laboratory firm.

2. Submit manufacturer's Stable-Air Generator Admixture product data, installation instructions and recommendations for material use.

3. Test and Performance - Submit the following data:

a. CLSM shall have a minimum compressive of 30 psi at 7 days and a maximum compressive strength of 100 psi at 28 days.

b. CLSM shall have a target flow spread of 8 in. according to ASTM D6103.

c. CLSM shall have minimal subsidence and bleed water which is measured as a final bleeding of less than 2.0% (retains 98.0 percent of original height after placement, approximately 1/4" per foot of depth) as measured in Section 10 of ASTM C 940.

d. Controlled Low Strength Material shall have a unit weight of 90 - 110 lbs./ft^3 measured at the point of placement.

1.05 QUALITY ASSURANCE:

A. Provide in accordance with Section 01400 and as specified.

B. Do not place CLSM until design mix, material tests, and trial batch mix compression test results are approved by the Engineer. Approvals are required at least 30 days before placing any production CLSM.

C. The Contractor shall employ an independent testing laboratory, acceptable to the Engineer, to test conformity of materials to specifications and to design CLSM mixes.

D. Furnish, pay for, and deliver representative samples of sufficient quantity of cement, aggregates and admixtures required for trial batch mixes to the testing laboratory. Obtain materials from the batching plant that will be supplying production CLSM in conformance with ASTM D 75.

E. Measure all materials for CLSM, including water, with equipment and facilities suitable for accurate measurement and capable of being adjusted in conformance with ASTM C 94. Use scales certified by local Sealer of Weights and Measures within one year of use and accurate when static load tested to plus or minus 0.4 percent of total capacity of scale. Batch all materials by weight except admixtures that may be batched by volume.

F. The Owner's testing agency will take control of test specimens; conduct flow tests and measure air content and temperature in the field.

G. Methods of Sampling and Testing:

1. Fresh Concrete Sampling: ASTM C 172

2. Specimen Preparation: ASTM C 31

3. Compressive Strength: ASTM C 39

4. Air Content: ASTM C 231

5. Slump: ASTM C 143

6. Flow Spread: ASTM D 6103

7. Temperature: ASTM C 1064

8. Unit Weight: ASTM C 138

1.06 DELIVERY, STORAGE AND HANDLING:

A. Provide in conformance with Section 01610 and as specified.

B. Order CLSM from batching plant so that trucks arrive at discharge locations when material is required.

C. Deliver CLSM to discharge locations in watertight agitator or mixer trucks without altering the specified properties of water-cement ratio, slump, air entrainment, temperature, and homogeneity.

D. Reject CLSM not conforming to specification, unsuitable for placement, exceeding the time or temperature limitations or not having a complete delivery batch ticket.

1.07 JOBSITE CONDITIONS:

A. Do not place CLSM until conditions and facilities for making and curing control test specimens are in compliance with ASTM C 31 and as specified herein.

PART 2 - PRODUCTS

2.01 MATERIALS:

A. All materials used in CLSM which can contact potable water, shall be certified as meeting requirements of NSF 61 for contact with potable water when in the finished CLSM.

B. Furnish Portland cement conforming to ASTM C 150. Use one approved brand from one mill throughout the contract term unless otherwise approved by the Engineer. Use Type II for all work, unless otherwise specified.

C. Water:

1. Use water for concrete that is potable and free from injurious amounts of oil, acid, alkali, organic matter, or other deleterious substances, and conforms to the requirements for water in ASTM C 94, and as specified herein.

2. The maximum water-soluble chloride ion in the water shall not exceed 0.060 percent by weight of cement.

D. Aggregates:

1. Use aggregates for CLSM conforming to ASTM C 33 and to the following requirements.

E. Admixtures:

1. General Requirements: ASTM C 494

F. Fly Ash: Provide fly ash conforming to the following requirements:

1. Class F fly ash conforming to ASTM C 618 for chemical and physical properties.

2. Supplemental requirements in percent:

a.	Maximum carbon content	3%
b.	Maximum sulfur trioxide (SO_3) content	4%
c.	Maximum loss on ignition	3%
d.	Maximum water requirement (as a percent of control)	100%
e.	Fineness, maximum retained on No. 325 sieve	25%

2.02 MIXES:

A. Mix design shall produce a consistency that will result in a flowable product at the time of placement which does not require manual means to move it into place.

B. Provide mix with compressive strength of maximum 120 psi when measured 28 days after placement.

C. Controlled Low Strength Material shall have minimal subsidence and bleed water which is measured as a Final Bleeding of less than 1.0% (retains 99.0 percent of original height after placement, approximately 1/4" per foot of depth) as measured in Section 10 of ASTM C 940 "Standard Test Method for Expansion and Bleeding of Freshly Mixed Grouts for Preplaced-Aggregate Concrete in the Laboratory".

D. The fresh unit weight shall be 90 - 110 lbs./ft^3, except where specified, and in the absence of strength data the cementitious content (excluding fly ash) shall be a maximum of 150 lbs./cy.

E. Control Density Fill shall have an in-place yield of 98% of design yield.

F. Provide Stable-Air Generator and comply with manufacturer's recommendations. Add Stable-Air Generator at the production plant or placement site.

PART 3 - EXECUTION

3.01 INSTALLATION:

A. Batch, mix and deliver CLSM in conformance with ASTM C 94. Batch all constituents at a central batching or mixing plant.

B. Seasonal Conditions:

1. Conform to ACI 305R and as specified herein for hot weather concreting. Do not add retarder admixture to any concrete.

2. Conform to ACI 306R and as specified herein for cold weather concreting. Do not add accelerator admixture to any concrete.

3.02 TRANSPORTING AND MIXING:

A. General: Conform to concreting procedures set forth in ACI 304R and as specified herein.

1. Transport CLSM to discharge locations without altering the specified properties of water-cement ratio, slump, air entrainment, temperature, and homogeneity.

3.03 TESTING:

A. General:

1. The Owner’s testing agency will use concrete samples provided by the Contractor at the point of agitator or mixer truck discharge to perform slump, flow consistency, air content, and temperature tests and for field control test specimens.

B. Notification of Delivery:

1. Notify the Engineer of concrete deliveries a minimum of 48 hours in advance of the scheduled placement. Include within this notification, the mix design and quantity of concrete, method and location of placement, frequency of trucks, ordered slump and time of initial delivery.

2. Furnish delivery batch ticket to the representative from the owner’s testing laboratory or to the Engineer's representative in the field with each batch delivered to the discharge locations in conformance with ASTM C 94.

C. Test Measurements at Discharge:

1. The Owner's testing laboratory firm will take measurement of concrete slump, flow consistency, air content and temperature for each 50 cu. yd. of each mix design but not less than once a day. The laboratory firm will conduct the slump, flow consistency, air content and temperature test measurements in conformance with ASTM C 143, ASTM D 6103, ASTM C 231, and ASTM C 1064, respectively.

2. The Owner's testing laboratory firm will submit test reports of field measurements specified above to the Contractor and to the Engineer.

D. Control Test Specimens:

1. The Owner's testing laboratory firm will cast a minimum of one set of three field control test specimens in conformance with ASTM C 31 for each 150 cu. yd. of each mix design of concrete but not less than once a day.

2. Laboratory personnel will record truck and load number from the delivery batch ticket, the concrete placement location of each specimen, the date, concrete strength, slump, air content, temperature, and truck driver's name.

3. The Contractor shall furnish tightly constructed 6 in. diameter by 12 in. long nonabsorbent test cylinder molds. Use molds of same type and manufacture for all test specimens. Leave molds on cylinders until received in testing laboratory.

4. The Contractor shall furnish boxes for initial curing of test cylinders in conformance with ASTM C 31 from time of fabrication until they are transported to the testing laboratory.

5. The Owner's testing agency will perform compression test one of each set of three specimens at seven days. Immediately notify the Contractor and the Engineer if the seven-day strength is deficient. Test the two remaining cylinders at twenty-eight days for concrete strength acceptance. The acceptance test result is the average of the strengths of the two specimens tested at 28 days. The laboratory firm shall submit compression test results of the control test specimens to both the Contractor and the Engineer. Evaluation and acceptance of concrete shall conform to ACI 301 and ACI 318.

6. The Contractor may take field control test specimens for small quantities of CLSM only if approved by the Engineer.

3.04 CURING AND PROTECTION:

A. General:

1. Protect CLSM from premature drying, hot or cold temperatures, and mechanical injury, beginning immediately after placement and maintain concrete with minimal moisture loss at relatively constant temperature.

2. Comply with curing procedures set forth in ACI 301, applicable portions of ACI 308 and as specified herein.

3. Perform hot weather concreting in conformance with ACI 305R and as specified herein when the ambient atmospheric temperature is 80 ^{o} F or above.

4. Perform cold weather concreting in conformance with ACI 306R and as specified herein when the ambient atmospheric temperature is 40 ^{o} F or below.

5. Protect Controlled Low Strength Material from traffic until sufficient strength has been achieved for further construction operations.

3.05 CONTRACT CLOSEOUT:

A. Provide in accordance with Section 01700.

END OF SECTION

SECTION 02223

SCREENED GRAVEL

PART 1 – GENERAL

1.01 DESCRIPTION:

A. Provide and compact screened gravel as indicated and specified.

1.02 RELATED WORK:

A. Section 02210: Earth Excavation, Backfill, Fill and Grading

1.03 REFERENCES:

A. American Society for Testing and Materials (ASTM) Publications:

1. C33: Specification for Concrete Aggregates

2. D6913: Standard Test Methods for Particle-Size Distribution (Gradation) of Soils Using Sieve Analysis

1.04 SUBMITTALS:

A. Submit the following in accordance with Section 01300:

1. Gradation test result from the soil testing laboratory, at least two (2) weeks prior to hauling material, for the Engineer's acceptance.

2. Submit a 20-lb. sample of the material when requested by the Engineer.

1.05 QUALITY ASSURANCE:

A. Provide in accordance with Section 01400 and as specified.

B. Qualifications of the independent soil testing laboratory as specified in Section 02210.

C. Maximum particle size and gradation analyses shall be performed in accordance with ASTM D6913.

D. Material testing frequency and requirements as specified in Section 02210.

PART 2 – PRODUCTS

2.01 MATERIAL:

A. Screened gravel: Gradation and physical property requirements of screened gravel shall conform to ASTM C33, Coarse Aggregate number 67.

B. Screened gravel shall be free from roots, leaves, and other organic materials, and free of ice, snow, frost and frozen soil particles.

C. Crushed rock of equivalent size and grading may be used instead of screened gravel.

PART 3 – EXECUTION

3.01 PLACEMENT AND COMPACTION:

A. Specified in Section 02210 and as indicated on the drawings.

3.02 CONTRACT CLOSEOUT:

A. Provide in accordance with Section 01700.

END OF SECTION

SECTION 02224

BANK-RUN GRAVEL

PART 1 – GENERAL

1.01 DESCRIPTION:

A. Provide and compact bank-run gravel as indicated and specified.

1.02 RELATED WORK:

A. Section 02210: Earth Excavation, Backfill, Fill and Grading

1.03 REFERENCES:

A. American Society for Testing and Materials (ASTM) Publications:

1. D1140: Test Method for Amount of Material in Soils Finer than the No. 200 (75 µm) Sieve.

2. D1557: Test Method for Laboratory Compaction Characteristics of Soil Using Modified Effort (56,000 ft-lbf/ft^3 (2,700 kN-m/m^3)).

3. D6913: Standard Test Methods for Particle-Size Distribution (Gradation) of Soils Using Sieve Analysis

1.04 SUBMITTALS:

A. Submit the following in accordance with Section 01300:

1. Gradation and compaction test results from the soil testing laboratory, at least two (2) weeks prior to hauling material, for the Engineer's acceptance.

2. Submit a 20-lb. sample of the material when requested by the Engineer.

1.05 QUALITY ASSURANCE:

A. Provide in accordance with Section 01400 and as specified.

B. Qualifications of the independent soil testing laboratory as specified in Section 02210.

C. Maximum particle size and gradation analyses shall be performed in accordance with ASTM D6913. Soil compaction test shall be performed in accordance with ASTM D1557 Procedure C.

D. Material testing frequency and requirements as specified in Section 02210.

PART 2 – PRODUCTS

2.01 MATERIAL:

A. Bank-run gravel shall be obtained from approved natural deposits and unprocessed except for the removal of deleterious materials and stones larger than the maximum size permitted.

B. Bank-run gravel shall be unfrozen and substantially free from vegetation, roots, loam and other organic matter, clay, snow, frozen particles and other fine or harmful substances.

C. Bank-run gravel: Inorganic granular material meeting the following gradation:

Sieve Designation	Percentage by Weight Passing Square Mesh Sieves
6 in.	100
2 in.	80 - 100
No. 4	20 - 65
No. 200	0 – 12

PART 3 – EXECUTION

3.01 PLACEMENT AND COMPACTION:

A. Specified in Section 02210 and where indicated on the drawings.

3.02 CONTRACT CLOSEOUT:

A. Provide in accordance with Section 01700.

END OF SECTION

SECTION 02225

SELECT BORROW

PART 1 – GENERAL

1.01 DESCRIPTION:

A. Provide and compact select borrow as indicated and specified.

1.02 RELATED WORK:

A. Section 02210: Earth Excavation, Backfill, Fill and Grading

1.03 REFERENCES:

A. American Society for Testing and Materials (ASTM) Publications:

B. C33: Specification for Concrete Aggregates

C. D1140: Test Method for Amount of Material in Soils Finer than the No. 200 (75 µm) Sieve.

D. D1557: Test Method for Laboratory Compaction Characteristics of Soil Using Modified Effort (56,000 ft-lbf/ft^3 (2,700 kN-m/m^3)).

E. D2487: Standard Classification of Soils for Engineering Purposes (Unified Soil Classification System).

F. D6913: Standard Test Methods for Particle-Size Distribution (Gradation) of Soils Using Sieve Analysis

1.04 SUBMITTALS:

A. Submit the following in accordance with Section 01300:

B. Gradation and compaction test results from the soil testing laboratory, at least two (2) weeks prior to hauling material, for the Engineer's acceptance.

C. Submit a 20-lb. sample of the material when requested by the Engineer.

1.05 QUALITY ASSURANCE:

A. Provide in accordance with Section 01400 and as specified.

B. Qualifications of the independent soil testing laboratory as specified in Section 02210.

C. Maximum particle size and gradation analyses shall be performed in accordance with ASTM D6913. Soil compaction test shall be performed in accordance with ASTM D1557 Procedure C.

D. Material testing frequency and requirements as specified in Section 02210.

PART 2 - PRODUCT

2.01 MATERIAL:

A. Use only material free from roots, leaves, and organic matter, and free of ice, snow, frost and frozen soil particles.

B. Select borrow shall be well-graded coarse-grained soil in accordance with ASTM D2487 and shall meet the following gradation:

Sieve Designation	Percentage by Weight Passing Square Mesh Sieves
3 in.	100
1-1/2 in.	70 - 100
3/4 in.	50 - 85
No. 4	30 - 60
No. 50	10 - 25
No. 200	0 - 5

C. Soil particles shall conform to the physical property requirements of ASTM C33.

PART 3 – EXECUTION

3.01 PLACEMENT AND COMPACTION:

A. Specified in Section 02210 and as indicated on the drawings.

3.02 CONTRACT CLOSEOUT:

A. Provide in accordance with Section 01700.

END OF SECTION

SECTION 02273

GEOTEXTILE FABRIC

PART 1 - GENERAL

1.01 DESCRIPTION:

A. Provide nonwoven geotextile fabric in foundation preparation for separation of existing soil from screened gravel or crushed stone.

B. Provide woven geotextile fabric for road reinforcement, and riprap separation as indicated or specified.

C. Provide woven geotextile fabric for silt fence as indicated or specified.

1.02 RELATED WORK:

A. Section 02210: Earth Excavation, Backfill, Fill and Grading

B. Section 02223: Screened Gravel

C. Section 02435: Crushed Stone

D. Section 02740: Bituminous Paving

1.03 REFERENCES:

A. American Society for Testing and Materials (ASTM) Publications:

1. D4355: Test Method for Deterioration of Geotextiles by Exposure to Light, Moisture and Heat in a Xenon ARC Type Apparatus.

2. D4491: Test Methods for Water Permeability of Geotextile by Permittivity.

3. D4533: Test Method for Trapezoid Tearing Strength of Geotextiles.

4. D4632: Test Method for Grab Breaking Load and Elongation of Geotextiles.

5. D4751: Test Method for Determining Apparent Opening Size of a Geotextile.

6. D4833: Test Method for Index Puncture Resistance of Geotextiles, Geomembranes and Related Products.

1.04 SUBMITTALS:

A. Submit the following in accordance with Section 01300:

1. At least two weeks prior to shipment, submit manufacturer's certificate of compliance and physical property data sheet indicating that requirements for materials and manufacture are in conformance as specified.

2. For informational purposes only, submit manufacturer’s printed installation instructions.

1.05 QUALITY ASSURANCE:

A. Provide in accordance with Section 01400 and as specified.

B. General:

1. Producer of geotextile fabric to maintain competent laboratory at point of manufacture to ensure quality control in accordance with ASTM testing procedures. Laboratory to maintain records of quality control results.

2. Do not expose geotextile fabric, except the geotextile fabric for silt fence, to ultraviolet radiation (sunlight) for more than 14 days total in period of time following manufacture until geotextile fabric is installed and covered with fill or backfill material.

3. Take all precautions to protect geotextile fabric from damage resulting from any cause. Either repair or replace geotextile fabric to Engineer's satisfaction at no additional cost to the Owner.

1.06 DELIVERY, STORAGE AND HANDLING:

A. Provide in accordance with Section 01610 and as specified.

B. Provide geotextile fabric in rolls wrapped with protective covering to protect geotextile fabric from mud, dirt, dust, and debris. Label each roll of geotextile fabric with number or symbol to identify production run.

C. Protect geotextile fabric from sunlight during transportation and storage. Do not leave geotextile fabric exposed to sunlight for more than two weeks during installation operations.

PART 2 - PRODUCTS

2.01 MANUFACTURERS:

A. Provide the following nonwoven geotextile fabric:

1. Geotex 501 as manufactured by Propex.

2. Mirafi 160N as manufactured by TenCate Geosynthetics.

3. 150 EX as manufactured by Thrace - LINQ.

4. Or acceptable equivalent product.

B. Provide the following woven geotextile fabric except for silt fence:

1. 200 ST as manufactured by Propex.

2. Mirafi 500X as manufactured by TenCate Geosynthetics.

3. GTF 200 as manufactured by Thrace-LINQ.

4. Or acceptable equivalent product.

C. Provide the following woven geotextile fabric for silt fence:

1. Geotex 2130 as manufactured by Propex.

2. W100 as manufactured by SKAPS Industries.

3. Beltech 940 by Belton Industries Inc.

4. Or acceptable equivalent product.

2.02 MATERIAL:

A. Geotextile fabric shall conform to test requirements for minimum average roll value (weakest principle direction) for strength properties of any individual roll tested from manufacturing lot or lots of particular shipment in excess of minimum average roll value (weakest principle direction) as specified hereafter:

B. Physical Properties of Minimum Average Roll of the nonwoven geotextile fabric shall be:

Property	ASTM Test Method	Units	Value
1. Grab Strength	D4632	lbs	150 (min.)
2. Grab Elongation	D4632	%	50 (min.)
3. Trapezoidal Tear Strength	D4533	lbs	60 (min.)
4. Puncture Strength	D4833	lbs	75 (min.)
5. Permittivity	D4491	sec -1	1.3 (min.)
6. Apparent Opening Size	D4751	Sieve Number	70-100
7. Ultraviolet Stability	D4355	Percent	70 (min.)

C. Woven geotextile fabric, except for silt fence, shall be:

Property	ASTM Test Method	Units	Value
1. Grab Strength	D4632	lbs	200 (min.)
2. Grab Elongation	D4632	%	15 (min.)
3. Trapezoidal Tear Strength	D4533	lbs	75 (min.)
4. Puncture Strength	D4833	lbs	80 (min.)
5. Permittivity	D4491	sec -1	0.02 (min.)
6. Apparent Opening Size	D4751	Sieve Number	30-70
7. Ultraviolet Stability	D4355	Percent	70 (min.)

D. Physical Properties of Minimum Average Roll of the woven geotextile fabric for silt fence shall be:

Property	ASTM Test Method	Units	Value
1. Grab Strength	D4632	lbs	100 (min.)
2. Permittivity	D4491	sec^{-1}	0.10 (min.)
3. Apparent Opening Size	D4751	Sieve Number	20-30
4. Ultraviolet Stability	D4355	Percent	70 (min.)

PART 3 - EXECUTION:

3.01 INSTALLATION:

A. Install geotextile fabric in accordance with manufacturer's printed instructions.

B. Place geotextile fabric on the foundation subgrade prior to placing the screened gravel or crushed stone.

C. Overlap geotextile fabric 18 inches minimum for unsewn lap joint. Overlap fabric 6 inches at seam for sewn joint.

D. Do not permit traffic or construction equipment to travel directly on geotextile fabric.

E. Place geotextile fabric in relatively smooth condition to prevent tearing or puncturing. Lay geotextile fabric loosely but without wrinkles or creases so that placement of the backfill materials will not stretch or tear geotextile fabric. Leave sufficient slack in geotextile fabric around irregularities to allow for readjustments.

F. Patch all tears in geotextile fabric by placing additional section of geotextile fabric over tear with a minimum of 3 feet overlay.

G. Extend the geotextile fabric and wrap around the screened gravel or crushed stone along the perimeter of the foundation.

H. Install silt fence in accordance with the manufacturer's printed instructions and as indicated.

3.02 CONTRACT CLOSEOUT:

A. Provide in accordance with Section 01700.

END OF SECTION

SECTION 02317

GRANULAR MATERIALS

PART 1 - GENERAL

1.01 DESCRIPTION:

1.02 Furnish all labor, materials, equipment, and incidentals required and obtain materials for filling and backfilling, grading and miscellaneous sitework, for the uses shown on the Drawings and as specified herein.

A. Section includes:

1. Soil and aggregate materials.

2. Compaction and testing.

1.03 REFERENCES:

A. American Association of State and Highway Transportation Officials (AASHTO) Publications:

1. M145: Standard Specification for Classification of Soils and Soil-Aggregate Mixtures for Highway Construction Purposes.

2. M147: Standard Specification for Materials for Aggregate and Soil-Aggregate Subbase, Base, and Surface Courses.

B. ASTM International (ASTM):

1. D422: Test Method for Particle-Size Analysis of Soils.

2. D698: Standard Test Methods for Laboratory Compaction Characteristics of Soil Using Standard Effort (12 400 ft-lbf/ft3 (600 kN-m/m3)).

3. D1557 - Test Method for Laboratory Compaction Characteristics of Soil Using Modified Effort (56,000 ft-lbf/ft3 (2,700 kN-m/m3)).

4. D2419: Standard Test Method for Sand Equivalent Value of Soils and Fine Aggregate.

5. D2434: Standard Test Method for Permeability of Granular Soils (Constant Head).

6. D2487: Standard Practice for Classification of Soils for Engineering Purposes (Unified Soil Classification System).

7. D2488: Standard Practice for Description and Identification of Soils (Visual-Manual Procedure).

8. D4318: Test Method for Liquid Limit, Plastic Limit and Plasticity Index of Soils.

9. D6938: Standard Test Method for In-Place Density and Water Content of Soil and Soil-Aggregate by Nuclear Methods (Shallow Depth).

C. Occupational Safety and Health Administration (OSHA) Standards and Regulations:

1. 29 CFR 1926, Subpart P: Safety and Health Regulations for Construction, Excavations.

1.04 DEFINITIONS:

A. Percent Compaction or Compaction Density: The field dry density of compacted material, expressed as a percentage of the maximum dry density.

B. Field Dry Density or Field Density: In-place density as determined by ASTM D1556 (Sand Cone Method), ASTM D2167 (Rubber Balloon Method), or ASTM D6938 (Nuclear Method).

C. Maximum Dry Density: Laboratory density as determined by ASTM D698 (Standard Proctor) or ASTM D1557 (Modified Proctor) and occurring at the optimum moisture content of the soil being tested.

1.05 SUBMITTALS:

A. Submit the following in accordance with Section 01300.

1. Qualifications of Independent Testing Laboratory, four weeks prior to earthwork.

2. Gradation analysis.

3. Materials Sources: Name of source, location, date of sample, sieve analysis, and laboratory compaction characteristics.

4. Test and Evaluation Reports:

a. Field density testing reports: Provide results from field density testing of prepared subgrade and compacted fill.

b. Grain-size analysis.

c. Laboratory compaction characteristics of soils.

d. Water content.

5. Compaction method

1.06 QUALITY ASSURANCE:

A. Comply with the requirements specified in Section 01400.

1.07 DELIVERY STORAGE AND HANDLING:

A. Comply with the requirements specified in Section 01600.

PART 2 - PRODUCTS

2.01 GRANULAR MATERIALS:

A. Suitable Material: Material from on-site excavation and permitted off-site sources that meets all of the specified requirements for its intended use and is not unsuitable. Wet subgrade material which meets other requirements for suitable material is suitable.

B. Unsuitable Material: Material that fails to meet requirements for suitable materials; or contains any of the following:

1. Organic clay, organic silt, or peat; as defined in ASTM D2487 and visually determined in ASTM D2488.

2. Vegetation, wood, roots, leaves, and organic, degradable material.

3. Stones or rock fragments over 6 inches (15 cm) in any dimension.

4. Porous biodegradable matter, excavated pavement, construction debris, rubbish, or refuse.

5. Ice, snow, frost, or frozen soil particles.

C. Granular Fill:

1. Densely Graded: Bank-Run Gravel with the following properties.

a. Gradation:

Densely Graded	
Sieve Designation (Square Mesh)	Percentage Passing (By Weight)
[6 inches (150 mm)]	[100]
[2 inches (50 mm)]	[80-100]
[No. 4 (4.75 mm)]	[20-65]
[No. 50 (300 micrometers)]	[10-25]
[No. 200 (75 micrometers)]	[0-12]

2. Open Graded: Screened Gravel or Crushed Stone: ASTM C33, Coarse Aggregate, No. 67. Soil particles shall conform to the physical property requirements of ASTM C33.

D. Sand:

1. Aggregate for sand shall consist of clean, inert, hard, durable grains of quartz or other hard durable rocks and free from vegetable matter, lumps or balls of clay and other deleterious substances.

2. Sand shall confirm to ASTM C33 for fine aggregate.

3. The gradation shall meet the grading requirements of the following table: :

Sieve Designation (Square Mesh)	Percent Passing (By Weight)
[1/2 inch (12.5 mm)]	[100]
[3/8 inch (9.5 mm)]	[85 to 100]
[No. 4 (4.75 mm)]	[60 to 100]
[No. 16 (1.18 mm)]	[35 to 80]
[No. 50 (0.30 mm)]	[10 to 55]
[No. 200 (0.075 mm)]	[2 to 10]

E. Select Borrow:

1. Well-graded, coarse-grained soil; classified in accordance with ASTM D2487 as GW, GW-GM, GW-GC, SW, SW-SM, or SW-SC.

2. Gradation:

Select Borrow	
Sieve Designation (Square Mesh)	Percentage Passing (By Weight)
[3 inches (75 mm)]	[100]
[1-1/2 inches (37.5 mm)]	[70-100]
[3/4 inches (19.0 mm)]	[50-85]
[No. 4 (4.75 mm)]	[30-60]
[No. 50 (0.3 mm)]	[10-25]
[No. 200 (0.075 mm)]	[0-5]

F. Base Aggregate for Pavement: ASTM D2487, USCS Classification of SM, SP, SW, GM, GP, or GW; no more than 15 percent fines (passing No. 200 sieve (75 micrometer)) and a uniformity coefficient greater than 2.

G. Crushed Stone shall be sound, durable stone, angular in shape, and free of any foreign material, structural defects, and chemical decay. Crushed stone shall conform to the following gradation limits:

Crushed Stone	
Sieve Designation (Square Mesh)	Percentage Passing (By Weight)
[2 inches (50 mm)]	[100]
[1-1/2 inches (37.5 mm)]	[70-100]
[3/4 inches (19.0 mm)]	[50-85]
[No. 4 (4.75 mm)]	[15-45]
[No. 50 (0.3 mm)]	[0-15]
[No. 200 (0.075 mm)]	[0-5]

H. Dense Grade Crushed Stone shall be crusher run coarse aggregates of crushed stone combined with fine aggregates uniformly premix with a predetermined quantity of water.

1. The crusher run coarse aggregates shall consist of hard, durable particles of stone.

2. Materials that break up when alternately frozen and thawed or wetted and dried shall not be used.

3. The crusher run coarse aggregates shall have a percentage of wear, by the Los Angeles test of not more than 45.

4. Fine aggregates shall consist of natural or crushed sand.

5. The composite material shall be free from clay, loam or other plastic material and shall conform to the following gradation limits:

Dense Grade Crushed Stone	
Sieve Designation (Square Mesh)	Percentage Passing (By Weight)
[2 inches (50 mm)]	[100]
[1-1/2 inches (37.5 mm)]	[70-100]
[3/4 inches (19.0 mm)]	[50-85]
[No. 4 (4.75 mm)]	[30-55]
[No. 50 (0.3 mm)]	[8-24]
[No. 200 (0.075 mm)]	[3-10]

I. Screened Gravel shall be hard, durable, rounded, or sub-angular particles of proper size and gradation, and shall be free from sand, loam, clay, excess fines, and other deleterious materials. Screened Gravel for pipe bedding shall have a resistivity of not less than 5000 ohms/cm as measured by ASTM G57. Screened gravel shall be graded within the following limits:

Screened Gravel	
Sieve Designation (Square Mesh)	Percentage Passing (By Weight)
[1/2 inches (12.7 mm)]	[100]
[3/8 inches (9.5 mm)]	[85-100]
[No. 8 (2.36 mm)]	[0-10]
[No. 10 (2.0 mm)]	[0-5]

J. Geotextile filter fabric shall be Mirafi, Type 140N; Dupont, Type SF 40 (Typar 3401), or equal product and shall conform to the following requirements:

1. Minimum grab strength of 120 lbs per ASTM D1682.

2. Equivalent open size (EOS) to be equal to or greater than the U.S. Standard Sieve No. 100 (0.150 mm) per ASTM D442.

3. Percent open area not to exceed about 25 percent. The percent open area is defined as the ratio of the sum of 20 or more individual open areas (times 100) to the sum of the corresponding 20 or more individual total areas.

4. Coefficient of permeability shall not be less than 10^{-2} cm/sec.

2.02 EQUIPMENT:

A. Compaction equipment shall be capable of consistently achieving the specified compaction requirements.

PART 3 - EXECUTION

3.01 EXAMINATION:

A. Verify that fill materials submittals have been accepted by Engineer before commencing with work requiring the use of these materials.

B. Verify that erosion and sediment control measures are in place and functioning properly.

C. Immediately notify the Engineer if unexpected subsurface facilities or suspected hazardous materials are encountered during excavation. Discontinue affected work in area until notified to resume work.

3.02 COMPACTION:

A. Compact to density specified and indicated for various types of material. Control moisture content of material being placed as specified, or if not specified at ±2% of optimum.

B. Compaction Density: Provide trench backfill densities as shown in the below table. The values listed are minimum percentages, unless noted otherwise.

Compaction Density Requirements	
Area	Percentage of Maximum Dry Density as defined by ASTM D1557 Modified Proctor
Trench Backfill (under pavement, slabs)	95
Trench Backfill (under structures or within 25 feet (7.5 m) of structures)	95
Trench Backfill (under exterior concrete slab and sidewalks)	90
Trench Backfill (in open or grassed areas)	85

3.03 FIELD QUALITY CONTROL:

A. See Section 01400 for general requirements for field inspection and testing.

B. Perform particle size distribution and gradation analyses using ASTM D422 and following standard practices in ASTM D421. Perform 1 test for every source and submit results to Engineer for acceptance. Repeat the moisture density test for every 5,000 cubic yards of material used.

C. Perform field density testing in accordance with ASTM D6938.

D. Evaluate field density test results in relation to maximum dry density as determined by testing material in accordance with ASTM D1557 (Modified Proctor).

E. Perform tests in accordance with ASTM D4318 to determine Liquid Limit, Plastic Limit and Plasticity Index and submit test results to Engineer for acceptance. Minimum of one test per 5,000 cubic yards of soil for use as fill material and whenever classification of material is in doubt as determined by the Engineer.

F. Location of field density tests shall be mutually acceptable to testing laboratory and the Engineer.

G. Frequency of field density tests:

Frequency of Field Density Resting	
Area	Frequency
Trench (Structural Areas)	1 per lift for every 1,000 linear feet of trench
Trench (Non-Structural Areas)	1 per alternate lift for every 1,000 linear feet of trench
Regardless of the minimum testing frequency specified, field density tests shall be performed by the Contractor in sufficient number for the Contractor's quality control purposes to ensure that specified density is obtained.	

3.04 ADJUSTING:

A. Shrinkage:

1. Backfill to a height above finished grade which will allow for the shrinkage or consolidation of material. Initially, provide at all points, an excess of at least one percent of total height of backfill measured from stripped surface to top of finished surface.

2. Supply specified materials and build up low places, without additional cost if embankment or backfilling settles so as to be below the indicated level for proposed finished surface at any time before final acceptance of the work.

3.05 PROTECTION:

A. Formulate excavation, backfilling, and filling schedule and procedures to eliminate possibility of undermining or disturbing foundations of partially and completed structures, pipelines and embankments or existing structures and pipelines.

3.06 CLOSEOUT ACTIVITIES:

A. Provide in accordance with Section 01700.

END OF SECTION

SECTION 02435

CRUSHED STONE

PART 1 - GENERAL

1.01 DESCRIPTION:

A. Provide and compact crushed stone as indicated and specified.

1.02 RELATED WORK:

A. Section 02210: Earth Excavation, Backfill, Fill and Grading

1.03 REFERENCES:

A. American Society for Testing and Materials (ASTM) Publications:

1. C33: Specification for Concrete Aggregates

2. D6913: Standard Test Methods for Particle-Size Distribution (Gradation) of Soils Using Sieve Analysis

1.04 SUBMITTALS:

A. Submit the following in accordance with Section 01300:

1. Gradation test result from the soil testing laboratory, at least two (2) weeks prior to hauling material, for the Engineer's acceptance.

2. Submit a 20-lb. sample of the material when requested by the Engineer.

1.05 QUALITY ASSURANCE:

A. Provide in accordance with Section 01400 and as specified.

B. Qualifications of the independent soil testing laboratory as specified in Section 02210.

C. Maximum particle size and gradation analyses shall be performed in accordance with ASTM D6913.

D. Material testing frequency and requirements as specified in Section 02210.

PART 2 - PRODUCTS

2.01 MATERIAL:

A. Crushed Stone: Gradation and physical property requirements of crushed stone shall conform to ASTM C33, Coarse Aggregate number 67.

B. Crushed stone shall be free from roots, leaves, and other organic materials, and free of ice, snow or frost and frozen soil particles.

PART 3 - EXECUTION

3.01 PLACEMENT AND COMPACTION:

A. Specified in Section 02210 and as indicated on the drawings.

3.02 CONTRACT CLOSEOUT:

A. Provide in accordance with Section 01700.

END OF SECTION

SECTION 02480

WETLAND RESTORATION AND LANDSCAPING

PART 1 - GENERAL

1.01 DESCRIPTION:

A. This specification includes the replacement of soils, seeding, planting, maintenance, and other restoration activities for the restoration of wetlands and general landscaping.

B. Wetlands that shall be restored are specified on the project plans. They are located along the pipeline route atop the following pipe segments:

1. 8-57 through 9-8 (Wetland 1)

2. 10-19 through 10-22 (Wetland 2)

3. 10-30 through 11-1 (Wetland 3)

Areas within the 100-ft Buffer Zone that shall be restored are as follows:

4. Grassy areas surrounding Wetland 1, Wetland 2, and Wetland 3 along the pipeline route (as indicated on the project plans)

5. Grassy area within the limit of clearing and grubbing around the new EDV structure (indicated as the 100-ft Buffer Zone on the project plans)

6. Grassy area temporarily disturbed for electrical conduit installation (indicated as the 100-ft Buffer Zone on the project plans)

Other locations that shall be restored following construction activities are located:

7. Southern edge of riprap swale on the west side of the access road (marked as Intermittent Stream on the project plans)

8. Riverfront Area near Electrical conduit tie-in (marked as Native Shrub Planting Area on the project plans)

9. Locations to be regraded and/or cleared of trees

Other locations not listed above that are temporarily disturbed during construction activities shall be restored or landscaped according to their designation (Upland, 100-foot Buffer Zone, Wetland, or Other) with Engineer approval.

1.02 REFERENCE STANDARD:

A. American Standard for Nursery Stock.

1.03 RELATED WORK

A. Section 01110: Environmental Protection Procedures

B. Section 01568: Erosion Control, Sedimentation and Containment of Construction Materials

1.04 SUBMITTALS:

A. Submit the following in accordance with Section 01300:

1. Certificates from the plant stock supplier shall be submitted for the plant stock to the Engineer's Wetland Specialist for approval at least 4 weeks prior to planting. The certificates shall state the botanical name, common name, origin, age, date, date of packaging, and name and address of the supplier.

2. For each seed mixture, certificates from the seed vendor shall be submitted to the Engineer's Wetland Specialist for approval, at least 4 weeks prior to application. The certificates shall state the botanical name, common name, number of seeds per unit weight, percentage of seeds by weight in a mixture, purity of the seed, germination percentage, the amount of undesirable plant seeds present in the mixture, date of production and of packaging, and name and address of the supplier.

1.05 QUALITY ASSURANCE:

A. Provide in accordance with Section 01400 and as specified.

B. At a minimum, Contractor shall coordinate with Engineer for the Engineer's Wetland Specialist , or Owner's approved Wetland Specialist, to be on site to inspect/monitor grading and backfill, planting, seeding, and completion of construction in and around the wetlands.

C. Inspection:

1. Upon delivery and before planting, Engineer's Wetland Specialist will inspect plants.

2. Inspection and approval by Engineer's Wetland Specialist of plants is for quality, size, and variety only and in no way impairs the right of rejection for failure to meet other requirements during progress of work.

D. General:

1. Provide only nursery-grown plants having been transplanted at least once and growing in a nursery for at least two years.

2. Allow Engineer's Wetland Specialist to determine fitness of any plant. Dead, unhealthy, injured, or otherwise unacceptable plant material shall not be accepted by the Engineer's Wetland Specialist and shall be removed from the site.

3. Provide container-grown stock in containers long enough for root system to develop sufficiently to hold soil together firm and whole when removed from container. Use no plants loose in the container.

4. Check plant material prior to commencing of planting operations. Plant no material prior to inspection by Engineer's Wetland Specialist. Notify Engineer at least 48 hours in advance of all planned planting operations and identify specific material and its location.

5. Furnish suitable quantities of water, hose, and appurtenances.

6. Use loam, having prior vegetative growth that did not contain toxic amounts of either acid or alkaline elements. Use stockpiled soil from Wetlands 1, 2, and 3 for restoration of these areas.

7. Begin maintenance immediately after each portion of lawn or wetland is seeded and continue for a minimum of 45 days.

8. Repair or replace seeded areas and shrubs which, in the judgment of the Engineer's Wetland Specialist, have not survived and grown in a satisfactory manner, for a period of one calendar year after the date of installation, and acceptance.

E. Sedimentation and erosion control best management practices shall be installed as required to protect waterbodies or wetlands in the vicinity of the project. The sedimentation and erosion control system shall be maintained fully functional during the entire duration of the excavation and grading and shall not be removed until disturbed areas are stabilized by planting or seeding as directed by the Engineer's Wetland Specialist.

F. Under no circumstances shall any material from excavation and/or backfilling activities be discharged into existing wetlands or waterways.

1.06 DELIVERY:

A. Plant and seed material shall be inspected by the Engineer's Wetland Specialist, after arrival at the site. The Engineer's Wetland Specialist shall be provided with the opportunity to review delivered materials for conformance with the project requirements. Dead, unhealthy, injured, or otherwise unacceptable plant material shall not be accepted by the Wetland Specialist and shall be removed from the site.

B. Plants are to be protected until installed to prevent damage to the root balls or desiccation. As much of the rhizome, root material, and attached soil as possible shall be retained with each plan stalk so that a viable propagule is planted.

C. Plants shall be protected during transport and delivery to prevent damage or desiccation of the roots or leaves.

1.07 STORAGE:

A. Plants not installed on the day of arrival at the site shall be stored and protected. Storage locations shall be continuously shaded and protected from wind and excessive heat. Plant roots must be kept in a moist, but not wet, condition until planted by watering with a fine mist spray.

B. Excavated soils shall be kept moist until replacement in the wetland. Soils not replaced on the day of excavation shall be stored and protected in designated stockpiling areas.

C. Any plants which have been permitted to dry out, or become overheated, or for any reason in the judgment of the Engineer's Wetland Specialist, do not clearly show a viable condition shall be rejected for use.

1.08 HANDLING:

A. Provide in accordance with Section 01610.

B. Preparation for Delivery:

a. Balled and Burlapped (B & B) Plants:

b. Dig and prepare for shipment in manner that will not damage roots, branches, shape, and future development of plant.

B & B Plants: Originate from soil which will hold a good ball and be wrapped with burlap or similar approved material, bound with twine or cord in such manner as to hold balls firm and intact.

C. Ball Sizes: Not less than standard established by the American Association of Nurserymen for B & B stock.

D. Delivery:

a. Deliver fertilizer to site in original unopened containers bearing manufacturer's guaranteed chemical analysis, name, trade name, trademark, and conformance to state law.

b. Delivery plants with legible identification labels:

c. Label shrubs with waterproof labels which will remain legible for at least 60-days.

d. Label with correct plant name and size as indicated in Plant List.

e. Protect plants during delivery to prevent damage to roots or desiccation of leaves.

f. Notify Engineer of delivery schedule in advance so plant material may be inspected at jobsite. Care shall be taken to avoid drying or damaging plants, particularly roots or rhizomes being transported to the planting site. Plants shall not be handled by the stems. Do not drop plants. Damaged plants shall be rejected by the Wetland Specialist and shall be removed from the site.

1.09 JOB CONDITIONS:

A. It is the intent of this specification that existing trees within grading and seeding limits, not disturbed by building operations, be saved and protected, except where specified to be removed. Cleared trees are required to be removed only after approval by Engineer and in locations specified on the plans. Engineer directs variations required in grading on the job.

B. Planting Seasons:

1. Planting of shrubs shall occur between April 15 and June 1 or between August 30 and October 30. No planting shall occur when the ground is frozen, snow-covered, or in an otherwise unsuitable condition for planting.

2. Spring seeding shall occur between April 1 to June 15. Fall seeding shall occur between September 15 to November 1, unless otherwise approved by the Engineer’s Wetland Specialist due to special conditions.

C. Perform actual planting only when weather and soil conditions are suitable in accordance with locally accepted practice.

D. Protection:

1. Protect seeded and planted areas against damage by trespass and other causes.

2. Protect work until accepted.

3. Replace, repair, restake, or replant as directed by the Engineer's Wetland Specialist, and at own expense, seeding or planting which is damaged.

4. If planting is done after lawn preparation, protect lawn areas and repair damage resulting from planting operations.

E. Wherever landscape work must be executed in conjunction with construction of other work, arrange a schedule of procedure that will permit the execution of landscape work as specified.

1.10 WARRANTY:

A. Provide in accordance with Section 01740.

B. All seeds and shrubs planted under this contract shall be healthy and in a flourishing condition of active growth 2years after the conclusion of planting and seeding.

C. The Contractor shall reseed and/or replace vegetation, all vegetated areas not in a vigorous, thriving condition and any dead vegetation, as determined by the Engineer's Wetland Specialist during and at the end of the warranty period.

D. Seeded and planted areas shall bear foliage of a normal density size and color 2 years from the conclusion of planting and seeding.

E. Guarantee new plant material through two full calendar years from the date of the planting installation.

1. Guarantee plants replaced under this for one full calendar year from date of replacement.

2. Repair damage to plants or lawns during plant replacement.

F. Guarantee lawn areas for duration of one full calendar year after seeding is determined to be alive and in satisfactory growth.

1. For the purpose of establishing an acceptable standard, scattered bare spots, none of which is larger than 1 sq. ft. will be allowed up to a maximum of 3% of lawn area.

PART 2 - PRODUCTS

2.01 BACKFILLING AND TOPSOIL:

A. Soil excavated from wetlands and from the intermittent stream and stockpiled shall be returned in-place to the wetland from which it was removed. No new soil shall be introduced to the wetlands or the intermittent stream.

B. The final planned elevation of the wetlands shall be achieved by backfilling with organic soil from the respective wetlands. The top 12 to 24 inches of organic wetland soil excavated from Wetlands 1, 2, and 3 will be stockpiled separately from excavated mineral soils and used to backfill from approximately 12 inches below grade to the final elevation. The Engineer's Wetland Specialist shall inspect the depth of organic soils to be excavated and stockpiled from Wetlands 1, 2, and 3.

C. The topsoil must not be compacted during excavation, backfilling, or grading activities. If the wetland soil is compacted, the soil must be physically disturbed (for example, by rototilling) before flooding and seeding. The Engineer's Wetland Specialist shall inspect and approve the backfilled topsoil prior to planting.

2.02 PLANTS:

A. A portion of the Riverfront Area where indicated on contract drawing C-104 shall be planted with ten indigenous shrubs. Acceptable species include Low bush blueberry (*Vaccinium angustifolium*) and meadowsweet (*Spiraea alba*) unless substitutions due to availability are approved by the Engineer's Wetland Specialist.

B. Container-grown shrubs shall be in that container for a sufficient time that fibrous roots are formed so the shape will remain, and the medium will hold together when removed from the container.

C. Planting stock shall be well-formed, sound, vigorous, healthy, and free from disease, sub-scald, windburn, abrasion, and harmful insects or insect eggs and shall have healthy, normal, and unbroken root systems.

D. Plants shall be grown under climatic conditions similar to those in the vicinity of the site. Plants budding into leaf or having soft growth shall be sprayed with an antidesiccant at the nursery before digging. If spraying of an antidesiccant is used, it shall not be required again prior to the transporting of plant materials.

2.06 SEEDING:

A. The Wetland areas and Intermittent Stream will be hand sown with a wetland seed mix comprised of native wetland grass, rush, and sedge species with a wetland indicator status of Facultative or wetter. The Wetland Seed Mix shall not include invasive or non-native species. The species composition shall be similar to the composition of the New England Wetmix produced by New England Wetland Plants, Inc., or equivalent USDA Natural Resources Conservation Service-approved native seed mixture.

B. Upland buffer zones at the restoration sites shall be seeded as shown on the contact drawings with a wildflower seed mix similar to the composition of the New England Wildflower mix produced by New England Wetland Plants, or equivalent USDA Natural Resources Conservation Service-approved native seed mixture.

C. Non-native, invasive, and non-target species shall not exceed 0.10 percent.

2.03 STAKES:

A. Wood stakes, a minimum of 2-in. by 2-in. square and 8 feet in length, of uniform size, straight, reasonably free from knots, treated with wood preservative, and painted green.

2.04 MULCH:

A. Shredded organic pine bark free of wood chips, stones, branches, or other deleterious material. Bark shredded in strips not larger than 3 inches in any dimension and aged for period of not less than six months after removal from original logs.

2.04 MAT:

A. Landscape fabric consisting of 3-ounce non-woven permanent mat, polypropylene material. Bonded on one side to permit water, fertilizer, and air to pass through and so as to allow soil and roots to breathe.

2.07 EROSION CONTROL BLANKET:

A. Single Net Straw Biodegradable Rolled Erosion Control Product, such as East Coast Erosion Control ECS-1B or similar.

PART 3 - EXECUTION

3.01 BACKFILL:

A. Handling of the wetland topsoil shall be performed as to maintain the integrity of the material. The organic soils shall be spread through the wetland to a minimum thickness of 12 inches. The final surface elevation should match that existing prior to disturbance.

B. The site shall be graded in a sequence which shall leave the top 12 inches of topsoil uncompacted. Final grading shall be free of ditches or ruts caused by equipment.

3.02 IRRIGATION:

A. Once grading is complete, soils in the wetland must be saturated. For optimal plant growth, the soil must be partially saturated with water (no standing water) immediately before seeding and should not be allowed to completely dry for two weeks after seeding.

3.03 PLANTING PITS:

A. Excavate with vertical sides and in accordance with following requirements:

1. Plant shrubs in pits 12 inches greater in width than diameter of root ball or container and minimum of 18 inches deep below finished grade, or as necessary to properly set plant at finished grade.

B. Adjust depth of planting beds and pits to provide minimum of 8 inches of planting soil mixtures under roots of all plants.

C. Set plants in center of pits, plumb and straight and at level that top of root ball is 1 inch lower than surrounding finished grade after settlement.

D. Compact topsoil mixture thoroughly around base of root ball to fill all voids when plant material is set. Cut all burlap and lacing and remove from top 1/3 of root ball. Do not pull burlap from under any root ball. Backfill shrub pits halfway with planting soil mixture and thoroughly puddle before backfilling shrub pit. Water shrub again when each backfill operation is complete.

3.04 SEEDING:

A. The Wetland Seed Mixture shall be hand broadcast at a rate of 1 lb./5,000 sq. ft., unless otherwise directed by the manufacturer and approved by the Engineer’s Wetland Specialist.

B. On Upland and buffer zones, sow seed at rate of 4 pounds per 1,000 sq. ft. on calm day, by mechanical means, unless otherwise directed by the manufacturer and approved by the Engineer’s Wetland Specialist. Do not "Hydro-Seed" unless otherwise permitted or

required by Engineer's Wetland Specialist. Sow one-half of seed in one direction, and other half at right angles to original direction. Rake seed lightly into loam, to depth of not more than 1/4 inch and compact by means of an acceptable lawn roller weighing 100 to 150 pounds per linear foot of width.

C. Any areas that are graded during the summer or fall and are not planted until the following year shall be covered with an Erosion Control Blanket in order to temporarily stabilize the soils.

D. Remove weeds or replace loam and reestablish finish grades, if any delays in seeding lawn areas and weeds grow on surface or loam is washed out prior to sowing seed and without additional compensation.

E. Water lawn areas adequately at time of sowing and daily thereafter with fine spray and continue throughout the maintenance and protection period.

F. The seedbed shall be inspected prior to seeding the by the Engineer's Wetland Specialist. The backfill and regrading of the site shall leave the top 2 inches of the soil loose and friable. Any stones larger than 2 inches will be removed from the soils surface. Any other debris will be removed including wire, cable, tree roots, concrete pieces, clods, or lumps.

3.05 PLANTING:

A. Thoroughly compact topsoil planting mixture around root balls and water. Immediately after plant pit is backfilled, form a shallow saucer slightly larger than pit with ridge of soil to facilitate and contain watering. After planting, cultivate soil in all shrub beds between shrub pits. Grub out sod or other growth and remove from the bed area. Rake bed area smooth and neat, and outline.

3.06 LIME AND FERTILIZER:

A. This section only applies to Upland areas. Fertilizer and lime shall not be applied to any wetland, 100-foot Buffer Zone, Intermittent Hydrological Connection, or Riverfront Area.

B. Apply lime by mechanical means at a rate of 50 pounds per 1,000 sq. ft.

C. Apply fertilizer at a rate of 50 pounds per 1,000 sq. ft.

3.07 CLEAN-UP:

A. Remove soil or similar material that has been brought onto paved areas, keeping these areas clean.

B. Upon completion of planting, remove excess soil, stones, and debris which has not previously been cleaned up and legally dispose of off-site.

C. Prepare lawns and planting areas for final inspection.

D. Protect slopes and embankments against erosion until work is accepted. Repair eroded portions of seeded or sodded areas by refilling, resodding, re-mulching, and reseeding as required by condition and to the satisfaction of the Engineer's Wetland Specialist. Protection may be by installation of sod strips or other methods.

3.08 MAINTENANCE - SEEDED AREAS AND PLANTING:

A. This section only applies to Upland, Riverfront Area, and 100-foot Buffer Zone areas.

B. Maintain lawn areas and other seed areas at a maximum height of 2-1/2 inches by mowing at least three times. Weed thoroughly once and maintained until the time of final acceptance. Reseed and refertilize with original mixtures, watering, or whatever is necessary to establish over entire area of lawn and other seeded areas a close stand of grasses specified, and reasonably free of weeds and undesirable coarse native grasses.

C. Begin maintenance immediately after each planting and continue until final acceptance of work. Water, mulch, weed, prune, spray, fertilize, cultivate, and otherwise maintain and protect all plants.

D. Reset settled plants to proper grade and position and restore planting saucers and remove dead material. Correct defective work as soon as possible within guarantee period.

3.09 CONTRACT CLOSEOUT:

A. Provide in accordance with Section 01700.

END OF SECTION

SECTION 02509

PRECAST MANHOLES

PART 1 - GENERAL

1.01 DESCRIPTION:

A. Provide and construct manholes as indicated and specified.

B. Base: Flowable fill placed up to pipe springline followed by precast concrete doghouse ring installed on top of flowable fill.

C. Walls (Risers and Cones): Precast Concrete.

D. Top of Cone: Reinforced concrete grading rings for adjusting frame to match finished surface (not to exceed 11 in.).

E. Frames and Covers: Cast-iron

1.02 RELATED WORK:

A. Section 02210: Earth Excavation, Backfill, Fill and Grading

1.03 REFERENCES:

A. American Society for Testing and Materials (ASTM) Publications:

1. A48: Specification for Gray Iron Casting.

2. C150: Specification for Portland Cement.

3. C478: Specification for Precast Reinforced Concrete Manhole Sections.

4. C923: Specification for Resilient Connectors Between Reinforced Concrete Manhole Structures and pipes.

5. D4101: Specification for Propylene Plastic Injection and Extrusion Materials.

B. AASHTO M198: Joints for Circular Concrete Sewer and Culvert Pipe Using Flexible Watertight Gasket.

1.04 SUBMITTALS:

A. Submit the following in accordance with Section 01300:

1. Submit manufacturer's specifications and product data for all items specified.

2. Submit manufacturer's written instruction for installing resilient connector.

1.05 DELIVERY, STORAGE AND HANDLING:

A. Provide in accordance with Section 01610 and as specified.

PART 2 - PRODUCTS

2.01 MATERIALS:

A. Portland Cement: ASTM C150, Type II

B. Hydrated Lime: ASTM C207, Type S

C. Sand: Fine Aggregate, for mortar, Section 03300 but passes No. 8 Sieve.

D. Frames and Covers: Cast Iron minimum Class 25 conforming to ASTM A48, and as follows:

1. Castings to be free from scale, lumps, blisters, and sand holes.

2. Machine contact surfaces to prevent rocking.

3. Thoroughly clean and hammer inspect.

4. Capable of withstanding AASHTO HS-20 loading unless otherwise indicated or specified.

E. Standard Manhole Frames and Covers shall be marked “WATER” along with “SPRINGFIELD WATER & SEWER COMMISSION” and the Commission logo in raised relief. See Drawings for details.

1. Approved Products:
   a. East Jordan Iron Works Part 2008 11 and Part 2006 81

F. Protective Coating (Crystalline Waterproofing).

1. Concentrate, by Xypex

2. SIKA WT-240P, by Sika Corp.,

3. MasterSeal 500, by MBSCS US, LLC.

4. Or acceptable equivalent product.

2.02 PRECAST CONCRETE SECTIONS:

A. ASTM C478 and following modifications:

1. Wall thickness: shall be 7 inches minimum. Minimum manhole diameter shall be 72 inches. Design manholes for depths shown in the drawings assuming a soil density of 130 pounds per cubic foot.

2. Cement: ASTM C150, Type II, otherwise as directed by Engineer.

3. Joints between sections: Butyl rubber-based sealants.

4. Cure by subjecting to saturated steam at temperature between 100 and 130 degrees F. for 12 hours or more.

5. Cast or drill only two lift holes in each section.

6. Clearly mark date of manufacture and name or trademark of manufacturer on insides of walls on all sections.

7. Accept on basis of material tests and product inspection.

B. Cones and Conical Transitions not required due to shallow soil cover and limited clearance.

2.03 JOINTS:

A. Between precast sections: Butyl rubber-based sealants per Type B, AASHTO M198, but no bitumen content.

B. Non-shrink mortar for pipe connections to existing manholes:

1. Masterflow 713 Grout made by Master Builders, Cleveland, OH.

2. Five Star Grout made by U.S. Grout Corp., Old Greenwich, CT.

3. Upcon made by Upco Co., Cleveland, OH.

4. Or acceptable equivalent product.

2.04 MIXES:

A. Concrete: Cast-in-place, 3,000 psi, Section 03300

B. Mortar:

1. For Plugging lift holes: Mix portland cement and sand in proportion by volume of 1: 1-1/2, with sufficient water.

PART 3 - EXECUTION

3.01 SETTING PRECAST SECTIONS:

A. Set verticals with sections and steps in alignment. Set bases true to line and elevation.

B. Install Butyl rubber-based sealants in joints between sections.

C. Plug holes for handling with mortar. Hammer mortar into hole until dense and excess of paste appears, then smooth flush with adjoining surface.

3.02 JOINTING AND CONNECTIONS:

A. Use joints between precast sections, and between pipes and precast sections conforming to related standards and manufacturer's instruction.

B. Apply non-shrink mortar according to manufacturer's instruction.

3.03 PROTECTIVE COATING:

A. Apply crystalline waterproofing coating material to exterior surfaces, by brush or spray according to manufacturer's printed instructions.

3.04 SETTING FRAMES AND COVERS:

A. Set frames with top conforming to finished ground or pavement surface as indicated.

B. Set circular frames as shown on the Drawings.

C. Install and set frames as recommended by the frame and manhole manufacturers. Finish mortar smoothly and give a slight slope to shed water away from frame.

D. Place covers in frames on completion of work.

3.05 LEAKAGE TESTS:

A. Inspect for visible leakage after backfilling with ground water at normal level.

B. Locate visible leakage inside manhole.

C. Repair leaks.

END OF SECTION

SECTION 02590

CATHODIC PROTECTION

PART 1 - GENERAL

1.01 DESCRIPTION

A. The CONTRACTOR shall install a cathodic protection (CP) (corrosion control) system for externally coated, welded steel pipe (WSP) at the West Parish Filter Facility for Springfield Water and Sewer Commission. The CP system shall protect all associated pipes, joints, valves, fittings, etc., and includes electrical continuity (joint bonding), electrical isolation (insulating flanges), sacrificial (magnesium) prepackaged anodes, and cathodic protection testing facilities, in accordance with this Section and Contract Documents.

B. The CONTRACTOR shall be responsible for review of the installation procedures under this and other Sections and for coordinating the installation of the corrosion control system, as required by the Contract Documents, and this specification.

1.02 REFERENCE SPECIFICATIONS, CODES AND STANDARDS

A. The publications listed below form a part of this specification to the extent referenced and are referred to within the text by the basic designation only.

B. Commercial Standards

1. American Society for Testing and Materials (ASTM)

   a. ASTM A48: Standard Specification for Gray Iron Castings

   b. ASTM B3: Specification for Soft or Annealed Copper Wire

   c. ASTM B80: Specification for Magnesium-Alloy Sand Castings

   d. ASTM B843: Specification for Magnesium Alloy Anodes for Cathodic Protection

   e. ASTM D149: Standard Test for Dielectric Breakdown

   f. ASTM D257: Test Methods for DC Resistance or Conductance of Insulating Materials

   g. ASTM F436: Standard Specification for Hardened Steel Washers

   h. ASTM G97: Laboratory Evaluation of Magnesium Sacrificial Anode Test Specimens for Underground Applications

2. American Water Works Association (AWWA)

a. AWWA C217 Petrolatum and Petroleum Wax Tape Coatings for the Exterior of Connections and Fittings for Steel Water Pipeline.

3. Association for Materials Protection and Performance (formally NACE)

a. SP0169: Control of External Corrosion on Underground or Submerged Metallic Piping Systems

b. SP0286: Electrical Isolation of Cathodically Protected Pipelines

c. TM0497: Measurement Techniques Related to Criteria for Cathodic Protection on Underground or Submerged Metallic Piping Systems

4. National Fire Protection Association (NFPA)

a. NFPA 70: National Electrical Code

5. US Federal Highway Administration, Department of Transportation (DOT)

a. US DOT HS-20 Roadway Load Test

6. NSF International (NSF)

a. NSF 61: Drinking Water System Components – Health Effects

1.03 SUBMITTALS

A. Catalog cuts of all materials to be installed shall be submitted for approval.

B. Qualifications of the CONTRACTOR's Corrosion Engineer and Corrosion Technician, as outlined in the Quality Assurance Section 1.04, shall be submitted for approval.

C. Manufacturer's information for each item listed below shall be submitted for approval. (Include sufficient information to show that the materials meet the requirements provided herein, including references to specific sections and details shown on the Drawings.)

1. Prepackaged Magnesium Anodes

2. Submersible Magnesium Anodes

3. Above-Grade Cathodic Protection Test Stations

4. Pipe Lead and Joint Bond Wire

5. Thermite Weld Equipment and Materials

6. Thermite Weld Coating

7. Insulating Flange Components

8. Coating for Buried Insulating Pipe Flanges

9. Compression Connectors

10. Electrical Tape

11. Cable Warning Tape

D. The following reports shall be submitted for approval:

1. Insulating Flange/Joint Inspection Report.

2. Electrical Isolation Testing Between Pipe and Steel Reinforcement Report.

3. Baseline (Native) Potential Survey Report.

4. ASTM G97 current capacity test results

5. A letter report documenting all testing performed during system installation and activation. The letter report shall include a description of the test methods, all data, analysis of the data, and conclusions about the cathodic protection system's effectiveness.

1.04 QUALITY ASSURANCE

A. The criteria used to indicate adequate corrosion protection of the metallic water pipeline shall be as listed in NACE Standard SP0169.

B. The installation of the cathodic protection system's electrical components shall conform to the National Electrical Code NFPA 70, applicable federal, state, and local codes, and the recommendations of NACE Standard SP0169.

C. The criteria used to indicate adequate electrical isolation of the metallic water pipeline from structures not intended to be cathodically protected shall be as listed in NACE Standard SP0286.

D. Provide all materials, equipment, labor, and supervision necessary for the completion of all installations and testing.

E. Services of Corrosion Engineer: Obtain the services of a Corrosion Engineer to inspect, activate, adjust, and evaluate the effectiveness of the cathodic protection system. The Corrosion Engineer is herein defined as a registered Professional Engineer with certification or licensing that includes education and experience in cathodic protection of buried or submerged metal structures, or a person accredited or certified by NACE at the level of Corrosion Specialist or Cathodic Protection Specialist (i.e., NACE CP Level 4). Such a person shall have not less than five years' experience inspecting pipeline cathodic protection systems.

F. Services of Cathodic Protection Technician: Obtain the services of a Cathodic Protection Technician to inspect, activate, adjust, and evaluate the effectiveness of the cathodic protection system. The Cathodic Protection Technician is herein defined as a person accredited or certified by NACE as a Cathodic Protection Technician (NACE CP Level

2). Such a person shall have not less than five years' experience inspecting pipeline cathodic protection systems. The Cathodic Protection Technician shall operate under the supervision of Corrosion Engineer.

G. Maintain record drawings for the cathodic protection system throughout the installation of the equipment. Properly identify all items of equipment and material. Show the exact locations of all anodes, buried wires, cathodic protection test boxes, and insulating pipe flanges using dimensional ties to existing structures or survey monuments. Record all changes by using a red pen or red pencil on full-size drawings.

PART 2 - **PRODUCTS**

2.01 GENERAL

A. Provide cathodic protection system materials and equipment that are new, undamaged, and in the original packaging marked with the manufacturer's name or trademark. The materials and equipment shall be of the manufacturer's latest standard design and shall be fully compatible to provide a complete and functional cathodic protection system.

2.02 PREPACKAGED MAGNESIUM ANODES

A. Each high-potential magnesium anode shall have a nominal weight of 17 pounds, excluding backfill in accordance with ASTM B80 or B843. The anode ingot shall be 25.75 inches long by 3.50 inches wide by 3.75 inches high.

B. Composition of the anode shall be as follows:

Component	Composition by Weight
Aluminum	0.01-percent
Manganese	0.50 to 1.30-percent
Copper	0.02-percent
Nickel	0.001-percent
Iron	0.03-percent
Others (total)	0.30-percent
Magnesium	Remainder

C. The 17-pound anodes shall be packaged in permeable fabric membrane that is 34 inches in length by 7.5 inches in diameter.

D. The fabric membrane for each 17-pound anode shall contain a minimum of 28 pounds of special backfill. The special backfill material shall have the following composition:

1. Hydrated Gypsum: 75%

2. Bentonite: 20%

3. Sodium Sulfate: 5%

E. The anode and backfill shall be prepackaged into a single unit, as described in Section 2.02 A thru D. A minimum of 25 feet of AWG No. 10 stranded copper wire with HMWPE insulation (black) shall be attached to the anode. The wire shall be sufficient length to reach the termination point without splices. Wire-to-anode attachment shall be by silver solder and sealed to prevent any moisture penetration.

F. The anode's current capacity, as measured using the ASTM G97 standard test procedure, shall be minimum 480 amp-hours per pound. If anodes are of the cast type, the anode foundry or the anode retail supplier shall have a quality control program that includes random ASTM G97 testing. ASTM G97 current capacity tests shall be performed on randomly selected anodes at a minimum rate of 1 for every 2,500 anodes cast. Submit the ASTM G97 current capacity test results for the testing date that is closest to the production date of the anodes supplied for this project. All cast high-potential magnesium anodes shall bear a stamp with its foundry heat number for traceability.

2.03 SUBMERSIBLE MAGNESIUM ANODES

A. Each high-potential magnesium anode shall have a nominal bare weight of 10 pounds in accordance with ASTM B80 or B843, no backfill is required. The anode shall be 12 inches long by 6.0 inches wide by 3.0 inches high.

B. Composition of the anode shall be as follows:

Component	Composition by Weight
Aluminum	0.01-percent
Manganese	0.50 to 1.30-percent
Copper	0.02-percent
Nickel	0.001-percent
Iron	0.03-percent
Others (total)	0.30-percent
Magnesium	Remainder

C. The anode shall be encased with a dielectric material from the manufacturer, on the sides and bottom to limit the current being applied to the protected structure. The top section of the anode shall be exposed to the electrolyte.

D. The anode shall have a mounting tab installed by the manufacturer on each end of the anode.

2.04 CATHODIC PROTECTION TEST STATIONS

A. Above-Grade Test Stations

1. The above-grade test station shall consist of a nonconductive terminal board mounted with in polycarbonate test box.

2. The terminal board shall contain a minimum of seven terminals—using 0.25-inch by 20-thread nickel-plated machine screws and nuts.

3. The post-mounted test station shall be manufactured by CP Test Services, Cott Manufacturing, Inc. or approved equal.

4. The test station shall be permanently labeled with the purpose, type, stationing, and pipeline.

5. Where the test station is used for sacrificial anodes, the anodes shall be connected through a 0.01-ohm shunt.

6. The test box shall be mounted on a 3-inch galvanized steel post. The post shall be set in a 24-inch by 24-inch by 6-inch-thick concrete slab.

B. Test Station Concrete

1. In unpaved areas, provide a square reinforced concrete pad that is 24 inches by 24 inches, and 6 inches thick. Reinforcement shall be #4 bars, at 12 inches on center each way, in the center of the pad. Edges shall be provided with a 3/4-inch chamfer. To channel water away from the test station, slope the concrete 2 percent from center.

C. Compression Wire Terminals

1. Test station terminal lugs shall be non-insulating, one-hole ring type, compression terminal lugs for a 0.25-inch bolt size. Compression terminals shall be specially manufactured for terminating copper cables at test stations. The terminals shall be copper or tin-coated copper, as manufactured by Burndy Corporation or approved equal.

2. Compression connectors shall be specially manufactured for terminating the copper cables at the test stations. The connectors shall be copper and shall be manufactured by Burndy Corporation or approved equal.

D. Current-Measuring Shunt

1. Test station shunts shall be constructed to fit the terminal posts for the specified test station or junction box. The resistance shall be 0.01 ohm with a current capacity of 8 amperes. The shunt shall be Model "Yellow", as manufactured by Cott Manufacturing Company or approved equal.

2.05 PIPE LEAD AND JOINT BOND WIRE

A. All wiring shall be stranded copper wire of the AWG wire size and insulation color shown on the Drawings in accordance with ASTM B3, excluding wire provided with the magnesium anodes and reference electrodes.

B. Wire for bonded joints shall be single conductor, stranded copper with high molecular weight polyethylene (HMWPE) insulation (black). Wire size shall be AWG No. 2 for piping larger than 36-inch diameter, AWG No. 4 for 16-inch through 36-inch diameter piping, and AWG No. 6 for smaller than 16-inch diameter piping and all associated pipe fittings. A minimum of two bonding wires per joint shall be installed.

C. Pipeline test wires shall be single conductor, AWG No. 10 stranded copper wire with 600-volt HMWPE insulation, with colors as shown on the Drawings.

D. No wire splices shall be allowed unless prior written approval is given by the Corrosion Engineer.

2.06 THERMITE WELD EQUIPMENT AND MATERIALS

A. Thermite weld molds and charges shall be suitable for the sizes and types of materials and shapes encountered. Adapter sleeves shall be utilized for all thermite welds.

B. Typical size of the exothermic weld charge is 15 grams. The manufacturer shall be consulted for the proper charge size and material to be welded.

C. All welding materials and equipment shall be the product of a single manufacturer.

D. All exothermic welds shall have one wire per weld, with a minimum of 6-inches between welds.

2.07 COATING FOR THERMITE WELDS

A. Thermite welds to steel piping shall be coated with a prefabricated assembly, specifically designed for covering cathodic protection wire connections to piping and fittings. There shall be one weld per prefabricated assembly. The prefabricated assembly shall consist of the following components:

1. Top plastic sheet formed with an igloo-shaped dome and entry tunnel for the lead wire;

2. A special elastomeric compound in the plastic dome, firm enough to resist flow at normally encountered application and operating temperatures, but soft enough to mold itself around and completely cover the irregular welded profile;

3. A double row of parallel, flexible, serrations on each side of the dome to assist with conforming around small-diameter pipe; and

4. A base of black, unbacked, elastomeric tape with exceptional adhesive properties for bonding firmly to a surface, when used with the appropriate primer.

B. Caps shall be Model Handy Cap, as manufactured by Royston Laboratories Division or approved equal. The appropriate primer, as required by the elastomeric cap manufacturer, shall be used. Primer for the Royston Handy-Cap shall be Model Roybond 747 Primer, as manufactured by Royston.

2.08 INSULATING FLANGE COMPONENTS

A. For purposes of this specification, the terms “Pipe Flange Insulating Kit,” “Insulated Flange,” “Insulated Joint,” and “Dielectric Flange” are used synonymously.

B. Pipe flange insulating kit materials shall be designated by the manufacturer as suitable for service at the operating temperatures and pressures for the pipeline.

C. Flange insulating kits shall consist of a one-piece, full-face, insulating gasket; an insulating sleeve for each bolt; insulating washers; and steel washers. For nominal pipe diameters up to, and including, 36 inches, provide one insulating washer and one steel washer on each side of the flange for each flange bolt. For nominal pipe diameters greater than 36 inches, the insulating washers shall be installed sandwiched between a pair of matching steel washers on each side of the flange for each flange bolt.

D. Insulating Gasket: Insulating gasket retainers shall be full-face, Type E, NEMA G-10 glass, reinforced epoxy retainers with an ethylene propylene diene monomer (EPDM) rubber rectangular cross section O-ring seal. Minimum total gasket thickness shall be at least 1/8 inch. The gasket shall have the same outside diameter as the pipe flange. At valve-to-pipe connections where the inside diameters are not equal, the gasket’s inside diameter shall be equal to the smaller of the two inside diameters. Dielectric strength shall be at least 550 volts per mil in accordance with ASTM D149, and compressive strength shall be not less than 50,000 psi. The manufacturer’s name and date of manufacture shall be marked on both sides of the gasket with a minimum of 2-inch tall block letters using a durable marking ink or paint. The gasket shall be installed within six months of its manufacture date. Do not store insulated flange gaskets under direct sunlight nor at temperatures exceeding 110 degrees Fahrenheit. Use PSI Linebacker insulating gasket or approved equal.

E. Insulating Sleeves: Provide full-length, one-piece, NEMA G-10 Mylar insulating flange bolt sleeves. Dielectric strength shall be at least 400 volts per mil, in accordance with ASTM D257. The length of the insulating sleeves shall provide an air gap between the end of the insulating sleeve and the inside surface of the stud bolt nut with a tolerance of 1/32 inch minimum and 1/8 inch maximum. Insulating sleeve length must be adjusted for the actual thickness of the steel washers and insulating washers, in accordance with ASTM F436. The bolt holes on the opposing flanges shall be aligned so as not to pinch the insulating sleeve, which would result in electrical shorting of the two flanges.

F. Insulating Washers: Insulating washers shall be NEMA G-10 glass-reinforced epoxy with a minimum thickness of 1/8 inch. Dielectric strength shall not be less than 550 volts per mil, and compressive strength shall not be less than 50,000 psi. The insulating washer’s inside diameter shall be sized to fit over the insulating sleeve’s outside diameter.

G. Steel Washers: Provide hardened steel washers that conform to ASTM F436 for insulated flanges greater than 36 inches in nominal diameter. Double steel washers—four steel washers per flange bolt—are required for insulated flanges greater than 36 inches in nominal diameter. The inside and outside diameters of the steel washers shall match those

of the insulating washers. The steel washers must be able to freely rotate around the insulating sleeve. Attention must be paid to the fit between the steel washers and the insulating sleeve in order to avoid the washers twisting and cracking the sleeves when the flange bolts are torqued.

H. Provide four extra insulating sleeves and eight extra insulating washers for each insulating flange upon successful inspection of the insulating flange by the OWNER's ENGINEER.

2.09 EXTERNAL COATING SYSTEM FOR INSULATING FLANGES

A. Insulating flanges shall receive an exterior wax tape wrapping in the field. The coating applicator must apply the coating following all manufacturer's application specifications for the coating system and per the guidance in AWWA C217. All components of the coating system shall be manufactured by a single supplier to assure compatibility of individual components. The coating system shall be manufactured by Trenton Corporation or approved equal.

B. Materials:

1. Primer: A blend of microcrystalline wax, plasticizer, and corrosion inhibitors, which has a paste-like consistency and is designed to displace moisture, penetrate rust, and wet the surface, ensuring adhesion of the tape. The primer shall be Trenton Wax-Tape Primer or approved equal.

2. Filler Putty: A cold-applied, anti-corrosive, moldable filler material used to even the contours of irregular fittings and surfaces. Filler putty shall be used at all irregular surfaces to provide a smooth surface for the application of the inner-wrap and outer-wrap, and shall have the following properties:

   a. Specific Gravity: 1.15

   b. Density: 24 cu. in. per lb.

   c. The filler putty shall be Trenton Fill-Putty or approved equal.

3. Inner-Wrap: The inner-wrap shall be a non-woven, non-stitch-bonded, synthetic fabric saturated with a blend of microcrystalline wax, plasticizer, and corrosion inhibitor (no clay fillers). The inner-wrap shall have the following properties:

   d. Thickness: 70 to 90 mils

   e. Dielectric strength: 170 volts/mil

   f. The inner-wrap shall be Trenton #1 Wax-Tape or approved equal.

4. Outer-Wrap: A white, resin-coated, woven fiberglass fabric. The outer-wrap shall have the following properties:

   a. Thickness: 0.005 inch

b. Tensile strength (per 1-inch width): 85 lb. minimum

c. Tape width: 6 inches

d. The outer-wrap shall be Trenton Glas-Wrap or approved equal.

2.10 ELECTRICAL TAPE

A. Electrical tape shall be a conformable, water-tight sealant having a dielectric strength of at least 15 kV for a 1/8-inch-thick layer.

B. Tape shall be Scotch 88 Vinyl Tape and Scotch C130 Rubber Tape or approved equal.

2.11 CABLE WARNING TAPE

A. Cable warning tape shall be polyethylene material, minimum 6 inches wide, red, or yellow in color, and labeled "CAUTION - CATHODIC PROTECTION".

B. Tape shall be Terra Tape, as manufactured by Reef Industries or approved equal.

PART 3 - **EXECUTION**

3.01 GENERAL

A. The Drawings are diagrammatic. The exact locations and routing of anodes, test stations, cables and conduits shall be governed by structural conditions and any physical interference. The final placement of the anodes and test stations shall be at the locations approved by the OWNER’s ENGINEER and shall be marked on the record drawings.

B. All materials, workmanship and installation shall conform with all requirements of the legally constituted authority having jurisdiction. These authorities include, but are not limited to, the Federal, State, County, or City codes and regulations.

C. Unless otherwise indicated, install all materials in accordance with the manufacturers’ recommendations and safety procedures, and as shown on the Drawings.

D. Where requirements of this section conflict with the manufacturer's recommendations, the manufacturer's recommendations shall take precedence.

E. All materials and equipment to be used in construction shall be stored in such a manner as to be protected from detrimental effects from the elements. If appropriate storage is not available, stack materials and equipment well above ground level and protect from the elements as needed.

3.02 THERMITE WELDING

A. All thermite welds shall be made as shown on the Drawings and in accordance with the manufacturer's recommendations using the proper combination of equipment for the material and wire size being welded.

B. Ensure that the area where the attachment is to be made is absolutely dry. Remove mill coating, dirt, grime and grease from the pipe or fitting surface at the weld location by wire brushing or by the use of suitable safety solvents. At the weld location, use a mechanical grinder to clean a 2.5-inch square area of the pipe or fitting surface to a bright shiny surface, free of all serious pits and flaws.

C. Prepare the wire for welding by ensuring the cable is absolutely dry. The cable shall be free of dirt, grease, and other foreign products. Cut the cable in such a way as to avoid flattening or forcing out of round. To prevent deformation of the cable, cut the cable with cable cutters. Remove the insulation in a manner that will avoid damage to strands. Install adapter sleeves for all bonds and test wires prior to welding; either prefabricated factory sleeved joint bonds or bond wire with formed sleeves made in the field are acceptable. Hold the cable at an approximate 30-degree angle to the pipe surface when welding.

D. When the weld has cooled, remove the weld slag, and test the weldment for strength by striking with a sharp, shearing blow using a 2-pound hammer, while pulling firmly on the wire. Remove unsound welds and make new welds at least 2 inches away. Thoroughly clean mold and mold covers after completion of each weld to assure that no slag will penetrate into the next weld.

E. After soundness of the weld has been verified, thoroughly clean with a stiff wire brush and apply primer over the entire weld area where the elastomeric cap will be placed. The elastomeric cap shall extend on all four sides beyond the cleaned area. Push the dome of the prefabricated cap, containing elastomeric material, firmly into weld area. Lift the wire away from the pipe and apply the elastomeric material completely around and underneath the wire. Push the wire back down on the pipe. Follow all manufacturer's instructions for installing prefabricated caps.

F. Repair the pipe coating in accordance with the pipe coating manufacturer's recommendations.

3.03 BONDED JOINTS

A. All new steel pipeline joints—including those on pipe, fittings, valves, and branch connections intended to be cathodically protected, and except those specified to be insulated—shall be bonded as shown on the Drawings. All bond cables shall be thermite-welded to the pipe or fitting, as described in 3.02 above.

B. All joints shall be bonded with two HMWPE-insulated copper cables. Wire size shall be AWG No. 2 for larger than 36-inch diameter piping; AWG No. 4 for 16-inch to 36-inch diameter piping; and AWG No. 6 for smaller than 16-inch diameter piping and associated pipe fittings.

3.04 PREPACKAGED MAGNESIUM ANODES

A. Prepackaged high-potential magnesium anodes shall be installed where indicated on the civil Drawings or in accordance with the CP schedule. Each anode shall be placed a minimum of 1 foot from the pipeline. Provide a minimum of 10 feet of separation between

anodes that are grouped and electrically connected together in a single termination point. Provide a minimum anode spacing of 2 feet from other pipelines. Prior to installation, remove all shipping covers from the anode. (Note: The prepackaging fabric for magnesium anodes shall not be removed.) Install the anodes in existing soils—free from rocks, roots, organic material, trash, or other debris—and backfill with a minimum of 6 inches of native soil. Do not install the anodes in sand, rock or gravel backfill. After placement, but prior to backfilling, pre-soak the anodes with 5 gallons of water.

B. Each anode shall be lowered, using a sling or rope, into the hole/excavation site and placed vertically at the bottom of the hole. The anodes shall not be transported, lifted, or lowered into the excavation using the anode lead wires. Care shall be taken to ensure that the anode lead wire insulation is not damaged. Anodes with damaged lead wires or insulation shall be removed from the project and replaced.

C. Anode lead wire shall be long enough to reach the junction box or test station without splicing. Care shall be taken not to damage the lead wire throughout the installation and testing process.

D. Prior to connecting the anodes to the structure wires, the open circuit potential of each anode shall be measured. A voltage of –1.70 volts to a portable saturated copper/copper sulfate reference electrode, or more negative, shall be obtained. If –1.70 volts are not obtained, further investigation shall be conducted to determine why the –1.70 volts have not been obtained. If required, replace the anode.

E. At anode test stations, anode lead wires shall be buried a minimum of 2 feet below grade. Handle wire with care. Route the anode wires to the junction box or test station, without splices, in a manner to prevent damage to the wires.

F. The metal portion of the anodes shall not contact the protected pipeline, except through the anode leads at termination points.

G. Where multiple anodes are installed, the anodes shall be installed with half on the left side and half on the right side of the pipeline. Looking upstream, the right-side anode leads shall be orange color coded, and the left-side anode leads shall be black color coded.

H. All anode wires shall terminate at a or junction box or test station for testing and monitoring.

3.05 DIRECTLY CONNECTED SUBMERGED ANODES

A. All submerged galvanic anodes shall be connected to the pipeline and slide gate through a welded studs or electrically continuous bolts. Direct connection of anodes to the pipeline and slide gate shall be installed in a location so as not to damage the anodes and not to impede the normal operation of the structures.

3.06 TEST STATIONS

A. The CONTRACTOR shall have responsibility for determining the correct test station type to install, based on the location, structural obstructions, roads, anodes, insulating flanges,

etc. Test stations shall be installed so as to avoid being damaged or obstructing the normal operation of any equipment.

B. Install test stations at the locations indicated on the civil Drawings or in accordance with the CP schedule. Test stations shall be located directly over the pipeline, except in areas that would place the test station in a roadway. If the Drawings or CP schedule indicate a placement location that lands in a roadway, then locate the test station at the closest point, just off the edge of the road. If installing an offset from the pipeline, refer to the offset test station detail on the Drawings. All test stations shall be properly labeled to indicate that they are for cathodic protection.

C. Attach test wires to the pipeline as indicated, using the proper thermite welding equipment and charges specified for the wire size and respective pipe material. Follow all procedures as outlined in Section 3.02 above.

D. All test station wires shall be routed a minimum of 3 feet below finished grade. Maintain sufficient slack in the test wires so that the wires can extend a minimum of 18 inches beyond the test station. Connect the test wires to the test station terminal block with one-hole compression terminal lugs for a 0.25-inch bolt size. Install a shunt and a copper shorting strap to connect the anode leads to the pipe lead where indicated on the Drawings.

E. The test station wires shall be protected from damage where they enter the conduit below the concrete pad.

F. The test stations shall be set in poured concrete (2 feet on each side and 6 inches thick) and reinforced with #4 rebar.

3.07 TRENCHING AND BACKFILL FOR CATHODIC PROTECTION SYSTEMS

A. Complete excavations and trenching, regardless of the type, nature, or condition of materials encountered, as required to accomplish specified construction to lines and grades shown.

B. Take care to avoid damage to existing structures and utilities during excavating and trenching process. Contractor may modify location, as approved by the ENGINEER, to minimize possible damage to existing structures. Trenches shall be of uniform depth and width, level, smooth, and free of sharp objects.

C. Slope, shore, or brace excavations and trenches, in accordance with OSHA regulations, as necessary, to prevent caving during excavation in unstable material, and to protect adjacent structures, property, workers, and the public.

D. Install horizontal runs of PVC electrical conduit in trenches at a depth of 36 inches. Install plastic warning tape in a continuous manner at 12 inches above all horizontal runs.

E. Securely attach identification tags to all wires with nylon fasteners prior to backfilling operations.

F. Backfill trench with excavated backfill materials, if suitable. Suitable backfill shall be free of angular rock, debris, roots, turf, or other deleterious materials.

G. Do not use backfill material of frozen or consolidated debris. Leave the trench with the excess backfill material neatly mounded at not more than 4 inches above the existing ground level for the entire width of the trench.

3.08 CLEARANCE TO OTHER STRUCTURES

A. Natural clearance of 18 inches between the pipeline and other structures shall be maintained where possible. If 18 inches of clearance cannot be maintained, then an insulating blanket shall be installed between the two structures.

3.09 INSULATING FLANGES

A. Insulating flanges shall be installed where shown on the Drawings. The CONTRACTOR shall carefully align and install the insulating components according to the insulator manufacturer's instructions. Install test stations at all insulating flanges and insulating couplings as shown on the Drawings.

B. When the isolation flange kits are installed on an open-end flange, care shall be taken not to introduce any foreign material that could contaminate the interior surfaces for potable water in accordance with NSF 61.

3.10 COATING OF INSULATION FLANGES

A. The insulating flanges, including all isolation components, shall be tested for proper electrical isolation prior to applying the coating. The insulator shall be coated as described below.

1. Clean the surface of the flange and all of its components by power tool cleaning, in accordance with the coating manufacturer’s recommendations. If any part of the insulating flange kit is damaged while cleaning the metal components of the flange the damage part shall be replaced.

2. Apply a uniform coat of the primer to the external surfaces of the insulator and all of its components, including bolts, nuts, etc. The primer shall extend a minimum of 12 inches on each side of the insulator.

3. Apply filler mastic to all irregular surfaces of the insulator to ensure a smooth profile for application of the inner-wrap.

4. Apply inner-wrap to the insulator and its components in a spiral fashion with a 50% minimum overlap. The inner-wrap shall extend a minimum of 12 inches on each side of the insulator.

5. Apply outer-wrap to the insulator and its components in a spiral fashion with a 1-inch minimum overlap. The outer-wrap shall be applied with sufficient tension to provide continuous adhesion of the outer-wrap tape.

3.11 REINFORCED CONCRETE STRUCTURES

A. Under no circumstances shall metallic pipe be in contact with reinforcing steel.

B. Position reinforcing steel used in the construction of support blocks, anchor blocks, and any and all other concrete structures so that they are not in contact with the piping. Maintain a minimum clearance of 2 inches between the piping and all reinforcement steel or other metallic components. Under no circumstances shall metallic pipe be in contact with reinforcing steel, in accordance with NACE SP0286. If sufficient clearance cannot be provided, then a dielectric material may be required between the pipe and reinforcing steel to prevent electrically shorting the protected structure to the unprotected structure.

C. When penetrating a reinforced concrete slab (wall or floor), install a linked rubber seal between the pipe and the concrete slab sleeve. Install the linked rubber seal, in accordance with the manufacturer's requirements, to form direct contact to the concrete and to seal the area of the pipe penetration from water intrusion.

3.12 ISOLATION AND CONTINUITY TESTING

A. INSULATING FLANGES

1. Each insulated fitting shall be tested by the Corrosion Engineer or CP Technician for effective electrical isolation of the two mating pipe flanges. Effectiveness of the insulated pipe flange shall be judged in accordance with NACE SP0286, Section 8.2.7, using an insulation checker (e.g., M.C. Miller Gas Electronics Model 601, Tinker & Rasor RF-IT or approved equal).

2. Before backfilling, the CONTRACTOR shall test each insulator for electrical isolation. If the flanges are not properly isolated, the CONTRACTOR shall, at their expense, repair or replace all defective components. The CONTRACTOR shall test the repaired insulating flange assembly. This process will continue until testing reveals that the flanges are properly isolated.

B. CASINGS

1. Insulated casing spacers and end seals shall be installed between the steel pipe and metallic casings

2. Test for electrical isolation between any metallic pipeline and metallic casing in accordance with NACE SP0286.

3. Prior to and upon completion of backfilling operations, test the electrical isolation between the pipeline and all casings the pipe passes through to ensure the casing is not electrically shorted to the pipeline. If the casing is found to be electrically shorted, or electrolytically coupled to the pipeline, the CONTRACTOR shall correct the deficiency at the CONTRACTOR's expense.

C. JOINT BONDING

1. After installation, test all joint bonds to ensure the intended structures are electrically continuous.

2. Where the pipeline is installed utilizing horizontal directional drilling (HDD), or any method other than open trench, the pipe section shall be tested for electrical continuity prior to connecting to the upstream and downstream pipe sections.

3. The CONTRACTOR is responsible for the electrical continuity of pipe where the bonding is performed.

3.13 CATHODIC PROTECTION SYSTEM ACTIVATION

A. The CONTRACTOR's Corrosion Engineer and Cathodic Protection Technician shall inspect, activate, and adjust the cathodic protection system in accordance with NACE SP0169 and TM0497. The CP Technician shall work under the direct supervision of the Corrosion Engineer, as defined by this specification.

B. The Corrosion Engineer shall evaluate whether there are any stray currents affecting the water pipeline. If stray currents are present and affecting the water pipeline, and if there is the possibility that the current can cause detrimental corrosion, then the cathodic protection system's performance shall be evaluated.

C. Do not proceed with the cathodic protection system activation until the reports for the following have all been submitted and accepted as complete by the OWNER's ENGINEER: Insulated Flange/Joint Inspection Report; Electrical Isolation Testing Between Pipe and Steel Reinforcement Report; and Baseline (Native) Potential Survey Report. Provide a minimum of five days' advance notice to the OWNER's ENGINEER before the cathodic protection activation will be performed to allow for coordination and observance of these tests.

D. Before beginning each day of testing, calibrate portable copper/copper sulfate reference electrodes with respect to a master reference copper/copper sulfate reference electrode.

E. Measure and record native pipe-to-soil potentials (i.e., baseline pipe-to-soil potentials) at all cathodic protection test stations prior to activating the cathodic protection system. Measure native potentials on both sides of all insulating flanges, at the dielectric unions and at all test station wires. Measure the native potentials of electrically grounded equipment inside all vaults and structures along the pipeline. Where two wires are attached to the same pipeline, measure and record the native potentials for both wires. If the potential measurements for the same pipeline differ by more than 5 millivolts, investigate the cause. All test measurements shall be in accordance with NACE TM0497.

F. Measure the potentials of all galvanic anodes before they are connected to the pipe. Verify that the open-circuit potential of each high-potential magnesium anode is more electro-negative than –1,700 millivolts. While making these measurements, place the copper/copper sulfate reference electrode in the soil directly over the anode hole. A minimum of 24 hours shall be allowed before obtaining these measurements. If -1,700 millivolts are not observed, further investigation shall be conducted to determine why the

-1,700 millivolts has not been obtained. Report this condition to the Owner's Engineer and replacement of the anode may be required Activate the cathodic protection system by connecting all of the anode wires to the terminals inside each test station.

G. Measure and record the initial current of each anode groundbed using a portable digital meter. Measure and record the individual anode current outputs. Next, bond the anode lead wires to the pipe lead wires and measure the "On" potentials.

H. Measure and record "On" potentials at the same locations where native potentials were previously measured.

I. Measure and record the structure-to-copper/copper sulfate reference potentials for the facilities installed with direct connected anodes.

J. Resurvey the cathodic protection system at least two weeks after the initial energization to allow for the development of the cathodic polarization process.

K. Use the most recent current output of each anode groundbed to calculate the anode replacement dates, assuming continued uniform current outputs and the appropriate anode alloy consumption rate. Assume an 85% utilization rate for all anode ingots.

L. Furnish all test results, including all potential readings, anode groundbed current readings, insulating flange test data, dates, and times. Reference all data to the pipeline name and station number from which it was taken/observed. Submit all data, along with a letter report, to the OWNER's ENGINEER. The letter report shall include a description of the test methods, analysis of the data, and conclusions about the cathodic protection system's effectiveness. Submit all data in a spreadsheet format compatible with Microsoft Excel. Submit data in both hard copy and electronic format.

M. Prior to substantial completion, the OWNER's ENGINEER shall perform post-installation testing of all cathodic protection components. The repair or replacement of any defective or improperly installed components shall be the sole responsibility of the CONTRACTOR. Any and all repairs or replacement of defective or improperly installed cathodic protection components shall be performed by the CONTRACTOR and at no additional cost to the OWNER.

3.14 ACCEPTANCE CRITERION FOR STEEL PIPE

A. The operation of the cathodic protection system shall be tested to ensure that all portions of the pipeline are provided a full level of corrosion protection. Additional required tests are as follows:

   a. Open-circuit potentials of the anodes as indicated herein.

   b. Electrical isolation of all structures not intended to be cathodically protected, to include, but not be limited to, reinforcing steel, pipe piers, pipe saddle supports, electronic sensors, electrically operated valves, etc.

   c. Electrical continuity of the pipeline along the entire alignment.

d. Electrical continuity of all test wires from the pipe to the termination end of the wire.

B. The criteria used to evaluate the protection levels shall be as listed in NACE SP0169.

C. Workmanship furnished by the CONTRACTOR shall be guaranteed for two years.

END OF SECTION

SECTION 02600
WATER MAINS AND APPURTENANCES

PART 1 - GENERAL

1.01 SCOPE

A. The Work of this section includes the furnishing of all labor, tools, equipment and materials necessary to perform all operations required for the construction of exterior water mains, fittings, valves, hydrants and other related items necessary to complete the Work as specified.

B. All products and materials shall conform to the applicable standards of ANSI and AWWA and/or as specified herein.

C. All materials supplied shall be manufactured in the United States unless otherwise approved by the Engineer.

D. Attention is directed to the DOCUMENT 00700, GENERAL CONDITIONS and all sections within DIVISION 1 – GENERAL REQUIREMENTS, which are hereby made a part of this section of the Specifications.

1.02 MEASUREMENT AND PAYMENT

A. Measurement and payment for Work described in this section will be made in accordance with the provisions of SECTION 01025, MEASUREMENT AND PAYMENT.

1.03 SUBMITTALS

A. Shop Drawings and/or brochures shall be submitted for all items to be furnished in accordance with the provisions of Section 1300.

B. Submittals required under this section include, but are not limited to the following:

1. Pipe and fittings.
2. Gaskets.
3. Couplings and solid sleeves.
4. Valves.
5. Water Service Materials.

1.04 PRODUCT HANDLING

A. All pipe when shipped shall be packed and separated by wood separators such that pipe-to-pipe contact is prevented during transit and/or storage.

B. Take appropriate measures during the loading, trucking, unloading, and handling of pipe and appurtenant materials so as not to damage them or the roadway surface. Dropping of materials directly from the trucks upon the ground will not be permitted. Suitable effective buffers or runners shall be provided. Metal chain shall not be used for lifting materials.

C. Distribution of pipeline materials along the line of Work is not permitted without written approval of the Owner. Do not obstruct driveways, sidewalks and/or walkways or place materials on private property.

PART 2 - MATERIALS

2.01 DUCTILE IRON PIPE

A. All ductile iron pipe shall be designed and manufactured in accordance with ANSI/AWWA C150/A21.50 and ANSI/AWWA C151/A21.51. Pipe shall be designed for the rated working pressure in pounds per square inch shown below and for laying condition Type 2 (Flat bottom trench, backfill consolidated to centerline of pipe) and for eight (8) feet of earth cover. The pipe shall be in nominal laying lengths of eighteen (18) to twenty (20) feet. The grade of iron from which the pipe is made shall be 60-42-10; having 60,000 psi minimum tensile strength, 42,000 psi minimum yield strength and ten (10) percent minimum elongation.

Pipe Diameter (inches)	Thickness (inches)	Special Thickness Class
6	0.31	52
8	0.33	52

B. Ductile iron pipe shall have either push-on or restrained joints. Restrained joint pipe shall be used in lieu of thrust blocks to resist the movement of the pipe. Refer to the table on the Contract Drawings entitled “Minimum Restrained Joint Pipe Length” for the amount of restrained joint pipe that is required to resist the forces developed at fittings. All other pipes shall have push-on joints. Push on Joints shall be “Tyton Joint” as manufactured by U.S. Pipe and Foundry Company, or “Super Bell Tite Joint” as manufactured by James B. Clow and Sons, Inc., or equal. Pipe shall be jointed in accordance with the manufacturer’s instructions, and any appurtenant materials used in completing the connection, such as lubricants and rubber gaskets, shall be obtained from the same manufacturer as the pipe. In any case, rubber gaskets incorporated into the joint shall conform to USA Standard A21.11 (AWWA C111-64, ASTM C443-60T) or latest revision thereof. Lubricants used shall be manufactured for the express purpose of lubricating the parts of the joint in assembly. The lubricant shall be nontoxic, shall not support the growth of bacteria, and shall have no deteriorating effects on the gasket or the pipe.

C. The interior of the pipe shall be cement-mortar lined to twice the thickness specified in ANSI/AWWA C104/A21.4. The pipe manufacturer under controlled factory conditions shall apply the cement-mortar lining and field application is strictly prohibited.

D. The cement-mortar lining shall be seal coated with an asphaltic material in accordance with ANSI/AWWA C104/A21.4 and NSF Standard 61. Asphaltic seal coat shall not impart taste or odor, or toxic or carcinogenic compounds to the water contained therein. Asphaltic seal coat shall be a product acceptable to the NSF for use in potable water and shall be so listed in the NSF summary of approved products. The asphaltic seal coat shall be applied and cured in strict conformance with the coating manufacturer's instructions.

The pipe manufacturer under controlled factory conditions shall apply the asphaltic seal coat and field application is strictly prohibited.

E. The outside of the pipe shall be asphaltic coated to a minimum 1 mil thickness in accordance with ANSI/AWWA C151/A21.51

F. Restrained joint pipe shall be TR FLEX® as manufactured by the United States Pipe and Foundry Company or approved equal.

2.02 FITTINGS

A. Fittings shall be mechanical joint ductile iron. Tees for hydrant branches shall be mechanical joint anchoring tees. Fittings shall conform to ANSI/AWWA C110/A21.10 and ANSI/AWWA C111/A21.11. Compact fittings shall conform to ANSI/AWWA C153/A21.53.

B. All ductile iron fittings shall be Class 350 and conform to the weights and dimensions shown in the latest edition of the Ductile Iron Pipe Research Association (DIPRA) "Handbook of Ductile Iron Pipe" and be provided complete with all joint accessories.

C. Plugs, caps and blank flanges shall be ductile iron and shall conform to the weights and dimensions shown in the latest edition of the Ductile Iron Pipe Research Association (DIPRA) "Handbook of Ductile Iron Pipe" and be provided complete with all joint accessories.

D. The interior surface of all fittings shall be cement-mortar lined to twice the thickness specified in ANSI/AWWA C104/A21.4. The pipe manufacturer under controlled factory conditions shall apply the cement-mortar lining and field application is strictly prohibited.

E. The cement-mortar lining shall be seal coated with an asphaltic material in accordance with ANSI/AWWA C104/A21.4 and NSF Standard 61. Asphaltic seal coat shall not impart taste or odor, or toxic or carcinogenic compounds to the water contained therein. Asphaltic seal coat shall be a product acceptable to the NSF for use in potable water and shall be so listed in the NSF summary of approved products. The asphaltic seal coat shall be applied and cured in strict conformance with the coating manufacturer's instructions. The fitting manufacturer under controlled factory conditions shall apply the asphaltic seal coat and field application is strictly prohibited.

F. The outside of all fittings shall be asphaltic coated to a minimum one- (1) mil thickness in accordance with ANSI/AWWA C151/A21.51.

2.03 JOINTS

A. Pipe: 4-in. through 48-in.

1. Use elastomeric gasket joints.

a. Solvent-welded joints are not acceptable.

2. All joints shall be integral, bell and spigot gasketed joints, or plain end with rubber ring couplings.

3. When the spigot end of pipe is to be inserted into a mechanical joint fitting, remove the beveled end of the pipe prior to insertion.

4. Provide one (1) elastomeric gasket with each length of bell-end pipe.

5. Use elastomeric gaskets of synthetic rubber; resistant to common ingredients of sewage and industrial wastes, including oils and groundwater, capable of enduring permanently under conditions of proposed use.

    a. Provide gaskets and lubricants made from materials that are compatible with the plastic material and with each other when used together and must not support the growth of bacteria and not adversely affect the potable qualities of the water.

B. Provide restraint devices for ductile mechanical joint fittings to PVC pipe in nominal pipe sizes 3 inch through 36 inch consisting of multiple gripping wedges incorporated into a follower gland meeting the applicable requirements of ANSI/AWWA C110/A21.10.

1. Provide the restraint devices with a working pressure rating plus a safety factor of 2:1 in all sizes.

2. Mechanical Joint Restraints: Listed by Underwriters Laboratories or Factory Mutual in the 4 inch through 12 inch sizes.

3. Mechanical Joint Restraints, 4 inch through 24 inch: Meet or exceed the requirements of ASTM F1674 of the latest revision.

4. Manufacturer:

    a. EBAA Iron Inc Series 2000PV

    b. Or acceptable equivalent product.

5. Material:

    a. Gland body, wedges and wedge actuating components:Cast from grade 65-45-12 ductile iron material in accordance with ASTM A536.

    b. Ductile iron gripping wedges: Heat treated within a range of 370 to 470 BHN.

    c. Coating:

    d. Provide all wedge assemblies and related parts processed through a phosphate wash, rinse and drying operation prior to coating application.

    e. Provide the coating consisting of a minimum of two coats of liquid Xylan® fluoropolymer coating with heat cure to follow each coat.

    f. Surface pretreat all casting bodies with a phosphate wash, rinse and sealer before drying.

    g. Electrostatically apply the coating and heat cure.

    h. The coating shall be a polyester based powder to provide corrosion, impact and UV resistance.

6. Provide three (3) test bars incrementally poured per production shift as per Underwriter's Laboratory (U.L.) specifications and ASTM A536. Testing for tensile, yield and elongation shall be done in accordance with ASTM E8.

7. Provide chemical and nodularity tests performed as recommended by the Ductile Iron Society, on a per ladle basis.

8. Traceability:

   a. Provide an identification number consisting of year, day, plant and shift (YYDDD) (plant designation) (Shift number), cast into each gland body.

   b. Record all physical and chemical test results such that they can be accessed via the identification number on the casting.

   c. Provide these Material Traceability Records (MTR's) available, in hard copy, to the purchaser that requests such documentation and submits his gland body identification number.

   d. Production pieces that are too small to accommodate individual numbering, such as fasteners and wedges, shall be controlled in segregate inventory until such time as all quality control tests are passed. These component parts may then be released to a general inventory for final assembly and packaging.

   e. All components shall be manufactured and assembled in the United States. The purchaser shall, with reasonable notice, have the right to plant visitation.

9. Installation:

   a. Provide mechanical joint restraint requiring conventional tools and installation procedures per AWWA C600, while retaining full mechanical joint deflection during assembly.

   b. Provide proper actuation of the gripping wedges with torque limiting twist off nuts.

2.04 FLEXIBLE AND TRANSITION COUPLINGS

A. Flexible couplings shall be Dresser Style 138 or approved equal.

B. Transition couplings shall be Dresser Style 162 or approved equal.

2.05 SOLID SLEEVES

A. Solid sleeves shall be long body type, ductile iron with mechanical joints. All sleeves shall conform to the weights and dimensions shown in the latest edition of the Ductile Iron Pipe Research Association (DIPRA) "Handbook of Ductile Iron Pipe" and be provided complete with all joint accessories.

2.06 RESILIENT SEATED GATE VALVES

A. Valves shall be manufactured in full compliance with the content and intent of this specification. Valve body shall be cast iron conforming to the latest edition of ASTM A126, Class B. Valves shall mechanical joint, with a two (2) inch operating nut and shall conform in every respect to AWWA C509. Operating nut shall have arrow cast in the metal indicating the direction of opening. Valves shall be designed for two hundred (200) psi

working pressure and shall be hydrostatically tested with twice the specified rated pressure applied to one side of the gate and zero (0) pressure on the other side.

B. When mechanical joint ends are specified for use, the gasket seating areas shall be fully machined to fixed dimensions and tolerances as per AWWA specifications. All valves shall be provided with "O" rings. The design of the valve shall be such that the seal plate can be fitted with new "O" rings while the valve is under pressure in a fully open position.

C. All valve surfaces shall have a one hundred (100) percent solids thermoset or fusion bonded epoxy protective coatings, holiday-free in the waterway, which shall meet all requirements of AWWA C550. The epoxy coating shall not impart taste or odor to the water. The coating shall be a product acceptable to the NSF for use in potable water and shall be so listed in the most current NSF summary of approved products. The coating shall be applied and cured in strict conformance with the coating manufacturer's instructions. The valve manufacturer under controlled factory conditions shall apply the coatings and field application is strictly prohibited.

D. **Valves shall open left** and shall be as manufactured by US Pipe Metroseal, Mueller Model A2360, American Flow Control 2500 (full weight) or M&H Style 3067. The Owner is standardized on these products.

E. Valves shall have maker’s initial, pressure rating, and a year of manufacture cast on the body.

2.07 VALVE BOXES AND COVERS

A. Valve boxes shall be heavy pattern cast iron, tar coated, adjustable sliding type with cast iron covers. Valve box covers shall be heavy duty drop type with the word "WATER" cast into the cover. Valve boxes shall have heavy duty 24-inch top section and 30-inch bottom section.

B. Bell end of the lower sections shall in all cases be sufficiently large enough to fit over the stuffing boxes of the valves. The smallest inside dimension of the shaft shall not be less than 5-1/4 inches. Upper section shall have a flange sufficiently strong enough to furnish the bearing for that section so that all weight or jolting from street traffic or the like shall not be transmitted to the valve. Each valve box including cover shall weight at least one hundred (100) pounds.

2.08 HYDRANTS

A. Hydrants shall open left and be of the following type and manufacturers only. The Owner is standardized on these hydrants.

Make and Model	Darling, B-62-B or Mueller Super Centurion
Type of Thread	National Standard Fire Hose Thread
Number of Outlets	2-1/2 inch hose connection (2 required)
	4-1/2 inch steamer connection (1 required)
Diameter Valve Opening	5-1/4 inches

Diameter of Barrel	7-1/4 inches
Hub	Mechanical joint
Direction of Opening	Open left (counter clockwise)
Depth of Bury	Five (5) feet Six (6) inches
Color	To match existing hydrants of the Owner

B. Hydrants shall be designed for one hundred fifty (150) pounds per square inch working pressure and shall conform in every respect to AWWA C502 and installed in accordance with AWWA Marval M-17: Installation, field testing, and maintenance of fire hydrants.

C. Hydrant barrel extensions shall be as recommended by the manufacturer of the hydrant and shall include all couplings, pins, flanges, gaskets, nuts and bolts necessary to provide a complete and workable installation. If more than one (1) type of extension is available, the Engineer shall approve the type to be provided.

D. Hydrants shall be as manufactured with breakaway flange and shall come with chained caps.

E. Operating nuts shall be AWWA Standard (pentagonal, measuring 1 1/2 inch point to flat).

F. Hydrants shall be equipped with "O-Ring" packing.

G. Hydrants shall be shop painted in accordance with AWWA Specifications. The breakaway flange shall be 2 inches above final grade.

H. All hydrants shall be marked with a 2 inch minimum diameter pipe 9 feet in length. This pipe shall be set 3 feet into concrete between the hydrant and oncoming traffic and shall be painted red.

2.09 THRUST RESTRAINT GLANDS

A. Thrust restraint glands shall be used on all mechanical joint fittings, valves and sleeves. The thrust restraint system shall incorporate individually activated gripping surfaces integral to the follower gland that makes up the mechanical joint.

B. Glands shall be manufactured of ductile iron conforming to ASTM A536. Gland dimensions shall be such that they can be used with standard mechanical joint bells and tee head bolts that conform to the latest revision of ANSI/AWWA A21.11/C111 and ANSI/AWWA A21.53/C153. Twist-off nuts, sized the same as tee-head bolts, shall be used to insure proper actuating of restraining devices. The mechanical joint restraint shall have a working pressure of at least 150 psi with a minimum safety factor of 2:1.

C. Glands shall be specifically designed for use with mechanical joint ductile iron pipe, fittings and valves. Glands shall be Series 1100 MEGALUG by EBBA Iron, East Land, Texas or approved equal.

2.10 WATER SERVICE MATERIALS

A. All water service materials, which shall include but is not limited to corporation stops, curb stops, couplings, adapters, and fittings shall have compression type connections. Castings shall be sufficiently heavy to meet all service conditions without springing or leaking and be clean and free from roughness both inside and out. Waterways shall be smooth, full

size and free from obstruction. All threads shall be cut sharp, clean and true. The Owner is standardized on the following Manufacturers specified herein.

B. Copper tubing shall be furnished in accordance with the requirements of AWWA Standards C800. Tubing shall be Type K designed for buried service. Tubing shall be approved for use with potable water, shall be NSF approved and shall be in compliance with ASTM B88.

C. Service connections shall consist of piping, corporation stops, curb stops and curb boxes.

D. All corporation stops will have Type counter clockwise threads.

E. No foreign copper tubing will be allowed.

F. Minimum allowable size for service connections shall be 3/4 inch.

G. Services shall be extended from the main to the lot line or to the curb stop, whichever is further.

H. Corporation stops will be Ford or Mueller ball type with metal gripper and double face gasket.

I. Curb stops will be Ford or Mueller ball type with drains.

J. Taps in the main for services shall be made only in the top one-half section to prevent the introduction of sediment into the service.

K. Curb stops shall be located in the center of the grass plot or on the property line or as directed by the Water Division through the engineer.

L. If requested the contractor shall furnish a sample of the equipment for inspection by the Water Department.

M. Suitable fittings for the installation of a water meter shall be provided on all services. A Ford Ball valve HB-34 or equal shall be installed by the contractor on the water main side of the meter.

N. Materials used for service connections from the curb stop to the building are the responsibility of the contractor. At least ten (10) feet of Type K copper tubing shall be installed from the ball valve to the outside of the foundation.

O. Service connections shall be buried at least four and one half feet. In ledge or rocky soil, service connections shall be bedded and covered by at least six inches of sand. No underground electrical, gas or sewer service shall be constructed within five feet of the service connection between the water main and the curb stop.

P. Service saddles shall be double stainless steel strap, epoxy coated.

Q. Service boxes shall be tar coated, cast iron, sliding type with inlaid covers. Covers shall be Erie style with two-hole cover. Shaft shall be the extension type extending from four (4) feet to five (5) feet six (6) inches. Provide 24” long x ½” diameter stainless steel operating rod.

2.11 BLOWOFFS

A. Temporary and permanent blowoffs, to be used for disinfection and testing purposes, shall meet the requirements specified for water service materials and shall be constructed in accordance with the details included on the Contract Drawings and/or as directed by the Engineer.

2.12 CORROSION PREVENTION

A. Zinc caps shall be installed on all exposed non-stainless steel bolts of all pipeline fittings and valves. Zinc caps shall comply with ASTM B418-80 and be manufactured by Mars Company; Rustrol Systems, or Northtown Company.

PART 3 - EXECUTION

3.01 INSTALLATION OF PIPE, FITTINGS AND APPURTENANCES

A. Pipes shall be thoroughly cleaned before being installed. Particular attention shall be paid to the proper positioning of the rubber gaskets. Joining of pipe and fittings shall be done in accordance with the manufacturers written instructions.

B. Temporary watertight plugs shall be utilized at the end of each working day to prevent the intrusion of silt, debris and water into the pipeline. When working in areas with a high potential for flooding of the pipe from groundwater, streams, storm drains, sewers and/or other means, the temporary plug shall be used on each pipe length during installation.

C. In the event of flooding of the pipeline, all pipe laying shall cease until the pipeline has been thoroughly cleaned, as determined by the Engineer.

D. When joined together, pipeline shall form a smooth continuous line and grade on straight sections and on curved sections (both vertical and horizontal) shall have uniform deflections within the required limits and conforming in general to the line and profile of adjacent roadway or easement. Location of rubber rings shall be determined with a checking gauge before backfilling the pipe.

E. Pipe shall be joined and laid in accordance with the manufacturer's latest published instructions.

F. Pipe shall not be laid with deflection of more than one-half (1/2) the maximum deflection recommended by the manufacturer.

G. Backfill shall be placed on both sides of the pipe and compacted simultaneously with approved tamping bars for the full length of pipe. Bell holes shall be excavated as necessary to ensure that the pipe and not the pipe bells are bearing the weight of backfill and the traffic load.

H. Bells or other joints shall not be installed directly under existing utilities or structures. Use short or random lengths to avoid such conditions.

I. Pipe shall not be installed in areas where excavations have been carried below trench grade, or where groundwater conditions create unstable bottoms, until such time as the trench is excavated, refilled and compacted as specified.

J. Elastomeric Gasket Joints

1. Clean joint surfaces. Prepare joint surfaces according to manufacturer's recommendation. Push pipe unit into place without damage to pipe or gasket. Use

devices to force pipes together with minimum open recess inside and outside and tightly sealed joints. Avoid force that could wedge apart and split bell ends.

2. Do not pull or cramp joints without permission of Engineer.

3. Remove unfittable pipes and replace with sound units.

4. Follow directions of joint material and pipe manufacturers when installing gaskets and joints to render them watertight and flexible.

K. Make solvent-cement joints in accordance with ASTM D2855. Observe precautions per ASTM F402.

3.02 MECHANICAL JOINTS

A. Mechanical joints shall be installed with all required joint accessories, including gaskets, follower glands with drilled bolt holes, tee head bolts, and hexagonal nuts.

B. Torque wrenches shall be used to take up such joints. Wrenches shall be equipped with adjusting breakable tension gauge, set to break the tension at the tension loading recommended by the manufacturer. Mechanical joints shall be made so as to secure tight joints, every means being taken to secure this result.

3.03 CUTTING OF PIPE

A. All cuts of ductile iron pipe shall be made with either an electric, pneumatic, or gasoline driven power saw. Blades shall be carbide tipped for cutting cement lined ductile iron pipe. Hydraulic cutters may be used provided the cement lining is not damaged by this method.

B. When lengths of pipe are field cut to provide for short lengths, the outside of the cut ends shall be tapered back about one-eight (l/8) inch at an angle of thirty (30) degrees with the centerline of the pipe and as recommended by the manufacturer before field cut pieces are installed.

3.04 PIPE BLOCKING

A. Furnish and install wood blocking where required as directed by the Engineer.

B. Blocking shall be new spruce plank one (1) inch and two (2) inches in thickness. Blocks shall be bedded firmly and level across the bottom of the trench and when any block has been sunk too deeply additional blocking of suitable thickness shall be placed to bring the pipeline to the required grade.

C. Blocks shall be placed at a point 1/5th of the span from each joint. Each block shall be two (2) inch by four (4) inch with a length of four (4) inches larger than the diameter of the pipe. A sufficient quantity of wedges twelve (12) inches long of four (4) inch by four (4) inch fir shall be furnished to properly hold valves and special castings in place. A four (4) inch by four (4) inch timber shall be used to brace hydrant posts.

3.05 CONNECTIONS TO EXISTING MAINS

A. Seventy-two (72) hours prior to connecting to any existing water main notify the water utility. Only the Owner's personnel shall operate existing valves.

B. Make all taps, whether wet or dry and install the required sleeves, tees, couplings, adaptors, reducers, pipe nipples, jointing materials, and other fittings which may be required and make all joints watertight, as specified, where shown on the Contract Drawings and/or as approved by the Engineer. All existing materials removed shall remain the property of the Owner, as determined by the Owner. Legally dispose of all removed materials that the Owner does not want stockpiled.

C. The cutting, removal, plugging and bracing of parts of the existing water system in order to make necessary connections is included in the Work. The shutdown of the existing water system including any subsequent pumping, hand excavating, and time required by the Owner to effect tight closures of existing valves, and any reasonable changes that may be required by the Engineer or any other Work done hereunder shall be considered as an obligation to complete the Work.

D. All Work shall be coordinated with the Owner and such connections that may be required shall be made at such times and in such a manner as to cause as little interference in water service within the existing system as is practicable.

3.06 VALVE BOXES

A. Furnish and install valve boxes over each valve. Valve boxes shall be 5-1/4" inside shaft, constructed of cast iron, sliding type with top flange. The word "water" shall clearly be cast in cover. Valve boxes shall be cast in two or three telescoping sections of sliding construction and of such lengths as will provide, without full extension, the required cover.

B. Covers shall be at least 6 inches in diameter, shall fit flush with the top, removal and shall come with E-Z Rise Top Extension or equal to facilitate street paving without excavation.

C. Valve boxes shall be coated with coal-tar pitch enamel or other approved coating

D. Valve boxes shall be cut with a wheel cutter, if necessary, to adjust them for height, where approved by the Engineer.

E. Valve boxes shall be properly adjusted over the operating nuts of valves and adjusted to the proper height to correspond to the roadway or ground surface. Operating nuts shall be centered in the valve boxes.

3.07 ABANDONED VALVE BOXES

A. Upon completion of all Work and successful testing and disinfection of the new pipeline, close all existing valves designated by the Engineer on existing pipelines which have been cut and capped and/or are no longer to remain in service.

B. After closure, each valve box shall be removed, the void filled with gravel and then capped with grout prior to repaving.

3.08 HYDRANT BRANCHES

A. Furnish and install hydrants on hydrant branches where shown on the Contract Drawings and/or as approved by the Engineer.

B. Each hydrant branch shall consist of the following:

1. Short Hydrant Branch - A valve anchoring tee with a 6-inch branch, 6-inch gate valve (mechanical joint), a 6-inch mechanical joint ductile iron pipe nipple of the

required length and thrust restraint glands installed on the joints of all hydrants, valves and fittings. The base of hydrants shall be set on a concrete pad.

C. Hydrant barrel extensions shall be furnished and installed where necessary to provide a hydrant elevation acceptable to the Owner.

D. Construct hydrant drainage wells of one-half (1/2) cubic yard capacity of two (2) inch stone placed in the excavation below and around the hydrant bottom.

E. Hydrants shall be given two (2) coats of paint after installation of the same type and color of the existing hydrants of the Owner.

F. Existing Hydrants

1. Where shown on the Contract Drawings and/or directed by Engineer remove existing hydrants and stack them at a location selected by Owner within the municipal limits. Prior to removing any existing hydrants, the Contractor shall notify the local Fire Department and coordinate this Work with that agency.

2. For each hydrant to be removed and stacked close the branch valve, restrain valve if necessary, cut and cap branch, remove gate box, and remove hydrant. Legally dispose of any hydrant that the Owner decides not to accept.

3. Where shown on the Contract Drawings and/or directed by the Engineer, remove existing hydrants and reinstall them at locations designated by the Engineer. Prior to incorporating such hydrants into the Work, they shall be refurbished and repaired to the satisfaction of the Owner. Inspection and repair of existing hydrants shall be performed in accordance with the applicable procedures described in AWWA Manual M17, including, but not limited to, replacement of all gaskets, packing, seals and any other parts which show indication of wear, corrosion or incipient failure. Reinstallation of existing hydrants shall be performed with materials, and in the manner specified for new hydrants.

3.09 SERVICE CONNECTIONS

A. Furnish and install all necessary water service materials required to complete the transfer of water services to the new pipeline(s) installed or required to abandon services replaced. The limit of work related to service connections shall be as approved by the Engineer and/or as follows:

1. If a complete transfer of a water service from the existing pipeline to the new pipeline is required, furnish and install all required materials and install the new service in the vicinity of the existing service to the property line. All connections to the customers' side of the curb stop are included as part of the Work.

2. If a portion of the existing water service, such as but not limited to the curb stop or service pipe, are to be reused, then furnish and install all other materials required to connect the new service materials to the existing materials.

3. If the existing pipeline from which services are being transferred is to remain in service at the completion of the Work, excavate down to each abandoned corporation stop and shut it off. Existing corporations to be abandoned shall only be shut off when approved by the Owner.

B. Service connection work shall only be initiated after the new pipeline has been successfully pressure and leakage tested, disinfected and approved for service by the Owner. Service connection work shall result in a minimum disruption of service to existing consumers.

C. Only "wet taps" shall be made on the new pipeline(s) unless written approval is obtained from the Engineer to use dry taps.

1. Pipe shall be tapped in accordance with the manufacturer's latest published recommendations in regard to but not limited to depth of tap and allowable sizes.

2. Drills and/or taps shall be inspected frequently for signs of wear. Do not exceed the number of taps specified by the manufacturer before reconditioning or replacing drills and/or taps. Service pipe shall be cut with approved wheel cutters only.

D. Prior to excavating for service connections, cut and stockpile all sod on established lawns, remove, replant and/or replace shrubs, hedges, fences and trees that are required to be removed or are damaged by the Work.

E. Equipment with rubber tires shall be used to excavate and backfill within the paved road surface and on established lawns.

F. Service pipe shall be installed to a minimum depth of five (5) feet and laid in a straight line wherever practicable to the structure to be serviced or to the point of termination of existing service. Install the service pipe beneath paved surfaces and sidewalks by jetting, jacking, boring or pulling the existing service pipe. Open cuts shall only be made when written approval is obtained from the Engineer.

3.10 CEMENT CONCRETE THRUST RESTRAINTS

A. Furnish and place cement concrete for thrust restraint, where restrained joint pipe cannot be used as directed by the Engineer.

B. Concrete shall be of proportions, one (l) part cement to two (2) parts sand and four (4) parts coarse aggregate.

C. Care shall be taken to ensure that all concrete thrust blocks bear against undisturbed trench walls, and not to encase flanges and bolts on mechanical joint fittings. Where unsuitable bearing material is encountered, excavate and place sufficient concrete ballast, with the approval of the Engineer, to offset the anticipated thrusts.

D. Thrust block bearing areas and volumes shall conform to the minimum dimensions found in the "Thrust Block Sizing", on the drawings for the various soil and fitting types noted. Where unsuitable bearing material is encountered, the Contractor shall excavate and place sufficient concrete ballast, to offset the anticipated thrusts.

E. Precast thrust blocks may only be used for hydrant installations when authorization is obtained from the Engineer, to avoid plugging stone drains and hydrant drain holes.

F. Thrust rods shall be used in conjunction with concrete thrust blocks for each hydrant installation or as otherwise directed by the Engineer.

G. Friction clamps and thrust rods shall be installed in accordance with the manufacturer's instructions, as directed by the Engineer. All exposed rods shall be coated twice with asphaltum after installation.

3.11 HYDRANTS, VALVE BOXES, AND CURB BOXES REMOVED AND RESET

A. If the contractor is directed to remove and reset a hydrant, valve box or curb box, he shall carefully excavate the structure to be removed, disassemble the item, relocate it, and then reassemble the item in its new location. Prior to their discontinuance, all items to be removed and reset shall be checked by the Water Division to ensure that they are in satisfactory condition. When the Division has satisfactorily determined that they are in good working order, they shall be installed in their new location in accordance with the same construction methods as for new hydrants, valve boxes and curb boxes.

3.12 OTHER MATERIALS

A. Furnish and install all necessary materials required for a complete installation as specified.

END OF SECTION

See Text Insert
Next Section

SECTION 02610

CFRP TECHNICAL SPECIFICATION

PART 1 - GENERAL

1.1 SUMMARY

A. This Section covers the supply and installation of carbon fiber reinforced polymer (CFRP) and glass fiber reinforced polymer (GFRP) laminate repairs for the rehabilitation of select portions of the SWSC 42" diameter PCCP Raw Water line.

B. This Section is applicable to the designated sections noted herein and on the Contract Drawings that contain existing 42-inch PCCP pipe "sticks" that will be rehabilitated using CFRP or GFRP laminates as defined herein.

1.2 DEFINITIONS

A. CFRP shall include either carbon fiber or glass reinforced polymer systems as defined in AWWA C305 in a prestressed concrete cylinder pipe (PCCP). When used with glass fiber reinforcing schema only, the repairs shall be designated as GFRP. When the term CFRP is used herein, it is understood that all technical and Contractual requirements apply to GFRP repairs as well. The use of CFRP shall be limited to wet lay-up application of CRFP and does not apply to pre-cured laminates adhered to the pipe wall, dry layup applications, nor robotic CFRP applications.

B. Terms pertaining to CFRP shall be as defined in ASTM D883, Standard Terminology for Plastics; ASTM D3878 Standard Terminology for Composite Materials; ASTM D907 Standard Terminology of Adhesives, and the Standard Definitions noted herein and in AWWA C305. When definitions are in conflict, definitions noted in ASTM D3878 shall have precedence.

C. Acceptance Test – A test or a series of tests conducted under actual or simulated field conditions to determine whether a material system or component conforms to specified requirements in a construction or procurement document.

D. Type Tests – Tests carried out under controlled laboratory conditions to demonstrate representative short or long-term structural properties of a product or one of its components.

E. Demonstration Test – A Type or Acceptance Test carried out to demonstrate cause and effect by specified methods; used to establish the relationship between a specific set of procedures to prepare and apply a product and a desired outcome in terms of achieving target mechanical or other properties. For example,

building a test panel to illustrate what combination of surface preparation and application technique/procedures are required to achieve target adhesion values.

F. Material Resistance Adjustment Factor – Factors that define the expected end use condition in terms of the values obtained in Type Testing either due to the difference between controlled laboratory and actual or simulated field conditions or due to long term applied load effects where direct testing is not available.

G. Maximum Allowable Pressure (MAP) – The maximum combination of internal pressures that a pipe or lining system is anticipated to be exposed to including sustained, occasional surge and/or test pressure.

H. Maximum Allowable Operating Pressure (MAOP) – The maximum anticipated sustained internal operating pressure that a pipe system or liner is anticipated to be exposed to.

I. Occasional Surge (emergency or transient) Pressure – Short-term internal pressure events usually caused by emergency operations of the pipe network system (e.g., a rapid valve closure) or malfunction (e.g., power failure, component failure, etc.).

J. Recurring (cyclic) Surge Pressure – Internal surge pressures that occur frequently and are inherent to the design and operation of the pipe network system (such as normal pump start-up or shutdown and normal valve opening or closure). Recurring surge pressure may occur millions of times in a piping system's lifetime.

K. External Load –External loads due to earth pressure, static or fluctuating groundwater levels, or other non-dynamic loading sources.

L. Live Load – Dynamic loads due to vehicles, railways, or airplanes.

M. Loads Due to Thermal Effects – Load induced shear effects due to thermal expansion and contraction of the pipe lining system or bonded liner materials.

1.3 REFERENCE STANDARDS

A. The following reference standards may be applicable to this specification:

1. AWWA C305 CFRP RENEWAL AND STRENGTHENING OF PRESTRESSED CONCRETE CYLINDER PIPE (PCCP)

2. AWWA Manual M11 – Steel Pipe

3. ASTM D638 - Standard Test Methods for Tensile Properties of Plastics

4. ASTM D790 - Standard Test Methods for Flexural Properties of Unreinforced and Reinforced Plastics and Electrical Insulating Materials

5. ASTM D3039 – Standard Test Method for Tensile Properties of Polymer Matrix Composite Materials

6. ASTM D3567 – Standard Practice for Determining Dimensions of "Fiberglass" (Glass-Fiber- Reinforced Thermosetting Resin) Pipe and Fittings

7. ASTM D4541 Standard Test Method for Pull-Off Strength of Coatings Using Portable Adhesion Testers

8. NSF/ANSI Standard 61: Drinking Water System Components – Health Effects

9. AWWA Committee Report "Structural Classifications of Pressure Pipe Linings – Suggested Protocol for Product Classification"

B. All reference standards shall be inferred to be the latest revision of the specific reference standard unless a specific year is specified.

1.4 DESCRIPTION

A. Pre-work Pipe Inspections

1. The CFRP Installer shall enter the pipe and shall positively mark each pipe requiring rehabilitation. Provide access to the Engineer to facilitate inspection and provide records of pre-work inspections.

2. The CFRP Installer shall examine the existing conditions to assess quality of substrate, document any damaged condition, ovality, or surface irregularities in the pipe, and identify any leaks near repair areas. The CFRP Installer shall be responsible to provide a substrate that is sound, visibly dry, and free of moisture.

3. The CFRP Installer shall correct all unsatisfactory conditions and obtain the Engineer's approval prior to commencement of repairs.

B. Cleaning of PCCP Pipes Prior to Repairs

1. This Specification covers the cleaning of the pipelines to be rehabilitated under this Contract by CFRP methods.

2. As CFRP products require bond, cleaning of the host pipe requires surface preparation to assure long term bond to concrete and steel surfaces as noted herein and in AWWA C305.

C. CFRP Laminate Repairs

1. This specification covers the supply and installation of CFRP for repair of select areas. The use of CFRP shall be limited to wet lay-up application of CRFP and does not apply to pre-cured laminates adhered to the pipe wall, dry layup applications, nor robotic CFRP applications.

1.5 QUALIFICATIONS

A. CFRP Laminate Repairs

1. The CFRP INSTALLER must be certified by the MANUFACTURER and have completed a minimum of thirty (30) independent installations of CFRP involving internal pipe rehabilitation projects in the past three years. For a project to be considered applicable, it must involve the following: internal application of CFRP on pipelines greater than 36 inch diameter, with pressures greater than 60 psi operating pressure, where the same CFRP system proposed for use on this project has been used as a stand-alone upgrade of the pipeline without reliance on the host pipe for structural integrity. The minimum project length shall be 20 lineal feet of repair. Provide a list of project references meeting above requirement - with OWNER'S contact information for each project.

2. The CFRP System MANUFACTURER shall specialize in the supply of the products specified with documented experience and written verification that the CFRP INSTALLER personnel are trained and certified in the use of the proposed CFRP system.

3. Certification that the foreman, head supervisor and top 5 carbon fiber installation technicians available to perform the work for OWNER have a minimum of 3 years of experience in large diameter internal pipe repair projects using CFRP, with a minimum of 20 internal pipe repair projects using CFRP per worker. A list of names, titles and projects shall be provided.

4. CFRP INSTALLER workforce is to self-perform the CFRP installation and all associated work tasks as outlined in Division 1 General Requirements of the specification. A confirmation statement shall be included with bid confirming that the full scope of work will be self-performed by the CFRP INSTALLER.

5. CFRP INSTALLER is to provide documentation confirming that they will provide ancillary equipment for the project including surface preparation equipment, ventilation, environmental controls units and generators. Include information on the equipment models for each typically utilized.

6. CFRP INSTALLER shall provide a letter from their surety company confirming that they can furnish a five-year warranty as described in section 3.09 of this specification.

7. CFRP INSTALLER shall provide a list of any projects where the installed CFRP system failed, did not perform as intended (leak, rupture, CFRP disbonded/had to be removed during or after installation, etc.), or where work was halted or abandoned prior to completion of the originally contracted scope of work. Provide owner contact information for any of the above referenced projects. If no projects occurred which meet these criteria, a letter stating such shall be provided. Failure to disclose or misrepresentation of this information shall be grounds for disqualification.

8. Safety: CFRP INSTALLER shall submit notarized documentation of the following in the name of the legal entity bidding, for the prequalified CFRP INSTALLER:

   a. Experience Modification Rates (EMR) for worker's compensation insurance for the last three (3) years with no year indicating an EMR above 1.5. A letter from company's surety must also be provided verifying this information and it must match the legal entity bidding the project.

   b. OSHA TRIR for the last three (3) years with no year indicating a TRIR above 2.0 for the same legal entity bidding the project.

1.6 QUALITY ASSURANCE

A. The successful implementation of CFRP systems as repair of a steel host pipe is governed by the assurance of quality installation procedures and adherence to the approved specification and drawings. Thus, four components are interwoven to define quality CFRP system installations, and they are design, materials, installation, and quality control.

B. The CFRP system design shall be completed in accordance with the AWWA C305 Standard by an experienced designer, familiar with both the behavior of steel pipe and the application of CFRP systems for pipeline repair and rehabilitation.

C. The CFRP system materials shall meet the requirements as set forth in Sec. 3 of AWWA C305. Assurance that CFRP system materials will meet the design life expectancy is driven by the ability to provide material testing that justifies the service life desired in accordance with Sec. 3.3 of AWWA C305.

D. Appropriate quality control measures shall be taken throughout the installation phase as detailed in this Section and in Section 4 of AWWA C305. This includes

installation procedures (Sec. 4.4), effective testing (Sec. 4.5), and inspection (4.7). Testing, including material strength tests and bonding to the substrate tests, are detailed in Sec. 3.3 and Sec. 3.7.3. The CFRP system inspection requirements, as described in 4.7, place a high degree of responsibility for quality installation on the inspectors and best practices. In order to ensure that the inspection is performed by a qualified inspector who can verify that a quality installation takes place, the inspectors shall meet the requirements of Sec. 4.7 of AWWA C305.

1.7 SUBMITTALS

A. CFRP Submittals

1. CFRP Material Data – Prior to Design

a. The Manufacturer shall provide the Engineer with product data sheets indicating physical, mechanical, and chemical characteristics of all materials used in the CFRP system. As a minimum, the Engineer shall be provided with the mechanical properties of the CFRP laminate, durability of the CFRP laminate based on the environmental conditions, and the physical properties of the resin.

b. The test reports shall clearly indicate the commercial names of the products used, batch ID, sample dimensions, number of samples tested, number of fabric layers used, load and strain measurement techniques, failure modes, and obtained strength, modulus, and ultimate elongation for each sample tested.

c. The Manufacturer shall provide documents indicating that all materials comply with the requirements of NSF 61 and NSF 61 Annex G. A printout from the NSF website, dated within one week of the due date, shall be submitted.

d. The Manufacturer shall provide documents indicating that all materials meet OSHA, EPA, and local ordinances for health and safety including VOC compliance.

e. Testing report demonstrating water tightness of the proposed CFRP system a minimum of twice the maximum design pressure of the pipeline. The testing report shall demonstrate that the proposed layup for the CFRP system does not leak when subject to twice the maximum design pressure of the pipeline.

f. Written verification from the MANUFACTURER regarding acceptable cure temperatures and time as well as allowable time window between installation of different layers.

2. By the CFRP MANUFACTURER and CFRP INSTALLER – Prior to Construction

   a. Document indicating agreement of the CFRP system manufacturer to have at least one field QA/QC personnel throughout the project execution.

   b. Manufacturer's Material Safety Data Sheets (MSDS) for all materials to be used.

   c. Application instructions, delivery, storage and handling instructions, and general recommendations regarding each material to be used.

   d. General Confined Space Entry procedure. Upon award of assignment CFRP INSTALLER shall submit confined entry procedure specific to job.

   e. CFRP INSTALLER shall submit a Job Hazard Analysis specific to job.

3. Working Drawings, Calculations and Methods Statements:

   a. Working Drawings Shall Provide the Following:

      (i) Type of Carbon Reinforcement Fabric Composite System.

      (ii) Product Name of Reinforcing Fabric(s).

      (iii) Product Name of Saturating Epoxy, the Primer Epoxy, and the Topcoat Epoxy.

      (iv) Weight of fabric, number of layers and orientation.

      (v) Minimum overlap circumferentially and longitudinally.

      (vi) Repair procedures and details for damaged fabric layers.

      (vii) Detail of proposed method of terminating carbon fiber-reinforced composite to provide a watertight seal that prevents any water from penetrating between the carbon fiber-reinforced composite layers and the end terminations of the existing pipe. At a minimum, stainless steel expansion rings shall be included at each end termination for the CFRP system.

4. Working Calculations Shall Provide the Following:

a. Type of Carbon Reinforcement Fabric Composite System.

b. Product Name of Reinforcing Fabric(s).

c. Product Name of Saturating Epoxy.

d. The composite material properties used in the design calculations. The properties used shall be equal to or more conservative than the properties listed on the product data sheets for the materials used.

e. The design requirements utilized in the design calculations shall be equal to or greater than the design requirements provided by Engineer and shall incorporate details provided in Section 2.01 of this specification.

f. Calculations associated with each of the design limit states outlined in Section 2.1 of this specification.

g. Submit the design calculations in accordance with the specified requirements herein and sealed and signed by a Registered Professional Engineer licensed to practice in the Commonwealth of Massachusetts.

5. MANUFACTURER'S written installation procedures, maintenance instructions, and general recommendations regarding the overall system and each material to be used including:

a. Method for preparing surfaces to accept CFRP.

b. Method, equipment, and procedures to be used to apply CFRP.

c. Method and drawings detailing transition of new CFRP lining to existing pipe.

6. Implementation Plan

a. Submit an Implementation Plan describing the inspection of the installation. The submittal shall include the following:

(i) Names of key personnel (foreman, head supervisor and top three carbon fiber installation technicians) scheduled to perform the work. Documentation that all workers who plan to work on the pipeline have received annual first aid training, confined space training and MANUFACTURER provided certified applicator training shall also be provided.

(ii) Name of personnel responsible for quality assurance.

(iii) Testing program for CFRP system.

(iv) Surface evaluation procedure.

(v) Material testing of CFRP.

(vi) Method for ensuring that the adhesion of CFRP epoxy will conform to specified and indicated requirements.

(vii) Methods for repairing defective linings.

(viii) Contingency plan to meet specified requirements in the event of an interruption to the CFRP placement.

7. CFRP INSTALLER shall prepare and submit a detailed schedule describing the work to be accomplished prior to the start of the shutdown and work to be accomplished during each shift during the shutdown. Detail daily activities and manpower used at each site. If Engineer deems any schedule to be inadequate to secure the completion of work in the time submittal, correct and re-submit schedules to change the order of prosecution of work to ensure proper and timely execution.

8. Record Submittals

a. Submit Quality Control Records, and Acceptance Test records in a report within 30 days of completion of each liner installation.

B. Shop Drawings

1. Submit shop drawings for all CFRP Sections including termination details

PART 2 PRODUCTS

2.1 CFRP DESIGN

A. Design Objectives

1. Class IV CFRP Liner: The CFRP Liner shall meet Class IV requirements for the stated design conditions in accordance with AWWA's Structural Classifications of Pressure Pipe Linings, Suggested Protocol for Product Classification. The design requirements of the liner system shall:

a. Provide an internal corrosion barrier for the host pipe.

b. Have the ability to span holes, gaps, and defects in the host pipe.

c. Have inherent ring stiffness such they do not collapse or appreciably change shape when dewatered.

d. Have a long-term independent pressure rating greater than the specified MAOP for the system.

e. Meet system identified constraints for Occasional and Recurrent Surge Pressures.

f. Be able to survive a burst failure of the host pipe.

g. Maximize the structural enhancement of the composite liner-host pipe by providing a close-fit with the host pipe.

h. Eliminate leakage in the host pipe by providing a liner with adequate hydrostatic integrity and a liner system design that prevents migration of water between the liner and the host pipe emanating from reinstated service connections.

i. Have a means of long-term restraint in the axial direction to preclude differential movement between the host pipe and the liner.

j. Maximize hydraulic efficiency by providing a smooth flow channel and minimal reduction of bore in the rehabilitated system.

k. Select a Class IV liner product and plan approach to rehabilitation toward maximizing the achievement of these design objectives.

B. Limit States Design Approach

1. The CFRP system shall be designed in accordance with AWWA C305 for each of the following potential limit states:

a. Rupture of CFRP laminate in the circumferential direction due to internal pressure.

b. Rupture of CFRP laminate in the circumferential direction due to bending of empty pipe.

c. Rupture of CFRP laminate in the circumferential direction due to combined pressure and bending due to gravity loads.

d. Buckling of the CFRP laminate in the circumferential direction due to external loads and pressures and internal negative pressure.

e. Rupture of the CFRP laminate in the longitudinal direction due to pressure induced thrust, Poisson's effect of internal pressure, and temperature change.

f. Interlaminar shear failure of CFRP at pipe ends.

g. Buckling of the CFRP laminate in the longitudinal direction due to temperature change.

C. Design Requirements

1. Project Specific Requirements:

a. Design CFRP as detailed in AWWA C305, with the following minimum design assumptions applied:

(i) Circumferential Design Loads:

- Internal working pressure, P_w = 150 psi
- Internal transient pressure (in excess of P_w), P_t = 60 psi
- Internal vacuum pressure, P_v = -14.7 psi (full vacuum)
- Soil cover height, H = 4.5 ft minimum per drawings,
- Height of groundwater, H_w = at ground surface
- Live load = HS-20 design truck
- Constrained sol modulus, M_s = 1,000 psi
- Installation Temperature: 70°F
- Normal Operating Temperature: 40 - 90°F
- Load and resistance factors in accordance with AWWA C305.

(ii) Longitudinal Design Loads

- Internal pressure only (pressure-induced thrust force and Poisson's effect);
- Temperature difference, ΔT (for empty pipe cooling or warming up, not less than ±40F°);
- Combined internal pressure and temperature.

(iii) End Termination

- CFRP shall be terminated with end details that prevent water from getting behind the CFRP liner, including the use of steel expansion rings per Part 2.5.B. The end detail

shall include a minimum of one layer of GFRP between the expansion ring and CFRP layers.

D. Existing System Design Conditions

1. Refer to the contract drawings for the location of the four pipes to be lined with CFRP. The four pipes are: 6-22, 9-15, 9-17 and 9-18.

2. Pipe 6-22 is a LCP150 and pipes 9-15, 9-17 and 9-18 are all ECP225.

3. None of the four pipes are reported to have any prestressing wire breaks based on recent electromagnetic inspection results. All four pipes exhibit longitudinal hairline cracks.

4. Refer to the Laying Schedules and Pipe Manufacturing Specifications included in the project specifications.

5. The CFRP liner shall be designed as a stand-alone buried flexible pipe (i.e., CFRP carrying 100% of the internal and external loads acting on the pipe).

E. Site Specific Design Requirements

1. Refer to Drawings and Contract documents for designated repair and pipe access locations.

2.2 CFRP SYSTEM

A. The CFRP system shall consist of epoxy primer, thickened epoxy (i.e., putty), unidirectional carbon fabric, impregnating epoxy resin, and topcoat. Other resin types (e.g., polyester, vinyl ester) shall not be used as any of these components.

B. Primer

1. The PCCP pipe substrate shall be primed with an epoxy material, which shall penetrate the pore structure of the substrate. The primer shall be 100% solids, low viscosity epoxy resin.

2. The primer shall have following minimum properties obtained according to ASTM D638 at 72°F and 40% relative humidity:

3. Tensile strength: 2,500 psi, minimum

4. Tensile modulus: 105 ksi, minimum

C. Thickened Epoxy

1. Thickened epoxy shall have a high enough viscosity to fill all voids in the PCCP substrate and provide a smooth base for the subsequent CFRP laminates.

2. Thickened epoxy shall either be pre-formulated and brought to site in pre-proportioned containers or prepared on site by mixing the impregnating resin with Cab-O-Sil TS-720 treated fumed silica to achieve the required viscosity.

D. Impregnating Resin

1. All fabrics shall be impregnated with 100% solids, low viscosity epoxy resin.

2. The CFRP repair design shall use a two-component epoxy with the following mechanical properties obtained according to ASTM D638 at 72°F and 40% relative humidity and reported by the Manufacturer:

   a. Maximum water absorption when tested in accordance with ASTM D570 (24 hours): 2 percent

   b. Minimum compressive yield strength of 10,000 psi when tested in accordance with ASTM D695 (75F, 7-day cure)

   c. Minimum tensile strength with an elongation of greater than 2 percent when tested in accordance with ASTM D638 (14-day cure): 6,000 psi

   d. Tensile modulus: 300 ksi

   e. Minimum flexural strength when tested in accordance with ASTM D790 (14-day cure): 7,500 psi

E. Carbon Fiber-Epoxy Laminates

1. The CFRP rehabilitation design shall use carbon fiber composite laminates with the following mechanical and physical properties:

   a. The tensile properties of the CFRP lamina shall be determined according to ASTM D3039 and statistically analyzed according to ASTM D7290 to determine the characteristic values.

   b. Minimum tensile modulus of elasticity (ASTM D7290): 9,000 ksi

   c. Minimum laminate thickness: 0.07 inch

   d. Maximum laminate thickness: 0.10 inch

   e. Minimum tensile strength (ASTM D7290): 100 ksi;

f. Minimum flexural modulus of 350,000 psi

g. Minimum flexural strength of 14,000 psi

h. Minimum strain at CFRP rupture, when tested in accordance with ASTM D3039: 0.85 percent (obtained as the ratio of characteristic tensile strength and Weibull mean of the modulus)

2.3 GFRP

A. A glass fiber reinforced polymer (GFRP) composite system shall be used as insulator between any steel components and CFRP to avoid possible galvanic corrosion and also shall be used as a watertightness layer.

B. The GFRP composite system shall be a designed system consisting of all associated fiber reinforcement and polymer adhesives/resins. All components of the GFRP composite system shall be provided by the same Manufacturer of CFRP system. The GFRP composite laminates shall have the following mechanical and physical properties:

1. Minimum tensile modulus of elasticity: 2,000 ksi
2. Minimum laminate thickness: 0.03 inch
3. Maximum laminate thickness: 0.10 inch
4. Minimum tensile strength: 30 ksi
5. Minimum strain at GFRP rupture (ASTM D3039): 1.0 percent

C. The total nominal thickness of a single GFRP laminate shall not be less than 0.04 in.

2.4 PROTECTIVE COATINGS

A. Topcoat

1. The CFRP system shall be top-coated with a coating recommended by the CFRP system Manufacturer and in conformance with the following:

a. The topcoat shall consist of the same thickened epoxy used between the CFRP layers or potable water coating, if needed.

b. Seams in fabric and edges shall be smoothened with thickened epoxy prior to application of the topcoat.

c. The topcoat material shall have been used successfully as a finished assembly on a minimum of five past documented pipe strengthening projects.

2. Topcoat shall be installed in accordance with the Manufacturer's published installation instructions. The duration elapsed between the application of the last CFRP layer and the topcoat shall not exceed the time specified by the Manufacturer.

2.5 OTHER MATERIALS

A. Epoxy Mortar

1. Epoxy mortar shall consist of one-part mixed epoxy combined with five parts sand or equivalent demonstrated to have the ability to bond to concrete, steel, and CFRP in overhead and all other positions.

B. Steel Expansion Ring

1. Internal Joint Seal stainless steel expansion ring (Weko Seal or equal) with a 1/4 in. rubber strip expanded against pipe wall to achieve minimum 100 psi interface pressure. All expansion rings, wedges, and shims shall conform to the grade recommended by the Manufacturer for the expected exposure condition and to ASTM A240.

2.6 DELIVERY, STORAGE AND HANDLING

A. Delivery

1. The products shall be delivered in original, unopened containers. Containers shall be clearly marked with legible and intact labels listing the Manufacturer's name, brand name, product identification, batch number, storage conditions, mixing ratios, and shelf-life.

B. Storage

1. Storage of all materials and equipment on site shall be in areas and using designated access locations.

2. Store materials in areas where temperatures conform to Manufacturer's written recommendations and instructions.

3. Stored fiber reinforcement and resins shall be protected from dust, moisture, and chemical exposure.

4. Resin components shall be stored separately and in tightly closed containers, away from direct sunlight, flame sources, or other hazards.

5. Fiber reinforcement and resins shall not be exposed to freezing temperatures during transport, storage, preparation, installation or curing.

C. Handling

1. The fabric reinforcement shall not be handled roughly. Care shall be taken not to damage the fibers.

2. Fabric reinforcement may be stored either in rolls of 4 in. radius or greater or stacked after cutting.

3. Consult the Manufacturer's MSDS for specific handling hazards of resin components.

PART 3 EXECUTION

3.1 GENERAL PROCEDURES

A. Work only in areas permitted by the Engineer.

B. CFRP INSTALLER shall request approval to work outside of the standard work hours, if necessary, as outlined in Section 01046.

C. Remove all tools, buckets, and materials from work areas and store neatly at a central location daily at the end of work. Clean work areas shall be maintained during construction activities.

D. Protect adjacent areas from damage, stains, and spillage during delivery of material to repair areas. Repair any damage that occur as a result of this Work to pre-construction condition or an approved betterment at no cost to the Engineer.

E. Protect the work from damage such as impact, marring of the surfaces, and other damage.

F. Materials may be skin irritants or sensitizers. Accordingly, advise CFRP INSTALLER to avoid contact with eyes and skin, inhalation of vapors, and ingestion. Use protective and safety equipment on site. Heed all label warnings by manufacturers. Make application in accordance with applicable safety laws.

G. Compliance with OSHA and other safety laws and regulations is the exclusive responsibility of the CFRP INSTALLER, his suppliers, consultants, and workers.

H. Prevent hazardous accumulations of dusts, fumes, mists, vapors, or gases in areas occupied during construction. Provide local exhaust ventilation to prevent harmful dispersal of hazardous substances into atmosphere of occupied areas. Dispose in manner that will not result in harmful exposure to persons. Ventilate storage spaces containing hazardous or volatile materials. Provide dust and fume

control, including, but not limited to, temporary protection and confinement barriers, ventilation equipment and procedures, and air-quality-monitoring equipment and procedures. Monitor air quality in the work area, and inside the pipeline. Comply with the requirements of all local governing regulatory agencies.

I. Ventilation inside the pipeline shall be per all OSHA requirements, including but not limited to OSHA confined space entry and underground construction requirements.

3.2 PREPARATION

A. Environmental Conditions

1. Do not install CFRP when the ambient temperature is outside the range required by the Manufacturer, the relative humidity is outside the range required by the Manufacturer, and the pipe surface temperature is less than 5°F above the dewpoint. In cold conditions, auxiliary heat may be applied to raise the ambient temperature to a suitable level. If heating is used, direct-fired gas or kerosene "salamander" type heaters shall not be permitted. Only electric or indirect-fired heaters shall be permitted, to avoid contaminating the substrate with carbonation.

2. The presence of water inhibits the adhesion of epoxy to the substrate and may contribute to the formation of amine blush. Do not install CFRP when surface moisture is present. Use dehumidifiers to keep the relative humidity within the range required by the Manufacturer. There shall be no standing water in the pipe.

3. If water leakage exists through cracks or joints, water flow shall be stopped by the CFRP INSTALLER.

B. Site Conditions

1. The CFRP INSTALLER shall employ a confined space entry procedure which will require an entry permit according to OSHA regulations.

2. Maintain control of dust, and debris due to mortar lining repair or surface preparation in each area of work. Clean up and remove such material at the

3.3 INSTALLATION

A. Substrate Repair

1. All problems associated with the condition of the original substrate that can compromise the integrity of the CFRP system shall be addressed before

surface preparation begins. The Manufacturer shall be consulted on the compatibility of the CFRP system with materials used for repairing the substrate.

2. Voids in the substrate shall be filled. Small voids no more than 0.50 in. in depth shall be filled with a thickened epoxy and larger voids with epoxy mortar.

B. Surface Preparation

1. All surfaces to receive CFRP shall be prepared. For the inner core concrete of PCCP, the concrete substrate shall be profiled using abrasive blasting to remove all contaminants (laitance, surface lubricants, broken mortar pieces, etc.) and to achieve a minimum profile of ICRI CSP 3 (refer to ICRI Guideline No. 03732).

2. For the end termination area, the steel cylinder shall be exposed, and the steel substrate shall be abrasively blasted to achieve SSPC SP-10 near white metal surface prior to installing the CFRP system.

3. Any holes or leaks in the pipelines shall be addressed as needed prior to application of the CFRP lining system.

4. The surfaces to which the CFRP system is to be applied shall be freshly exposed, free of loose or unsound materials, and shall be allowed to dry prior to CFRP installation.

5. Localized out-of-plane variations, such as form lines, sharp edges, and protrusions, shall not exceed ¼ in. Such out-of-plane variations can be removed by grinding, abrasive-blasting, or can be smoothed over using thickened epoxy if variations are very small.

6. All debris and dust generated during surface preparation shall be removed by air blasting or other approved means to achieve a dust free concrete surface.

C. Mixing of Resins

1. The resin and its catalyst shall be kept in tightly closed containers at all times except for the time of mixing to prevent absorption of carbon dioxide and moisture which could lead to amine blush. The mixing technique shall not cause air entrainment in the resin system.

2. All resins shall be mixed according to the Manufacturer's instructions. All resin components shall be at a proper temperature and mixed from pre-proportioned and pre-packaged containers until there is a uniform and complete mixing of components. On-site proportioning of resin components

is not allowed. Resins shall be mixed for the Manufacturer's prescribed mixing time and visually inspected for uniformity of color.

3. Mixed resin that exceeds the pot life specified by the Manufacturer shall not be used.

D. Application of CFRP System by the Wet Lay-up Technique

1. The application of the CFRP system shall be performed in accordance with the Manufacturer's published installation instructions.

2. The CFRP system primer shall be applied to all areas on the existing pipe surface where the CFRP system is to be placed. The primer shall be placed uniformly on the prepared surface at the Manufacturer's specified rate of coverage. The primer shall be allowed to cure in accordance with the CFRP Manufacturer's installation instructions before applying subsequent materials.

3. Following the primer, all voids in the substrate shall be filled to achieve a smooth surface using thickened epoxy.

4. All fabrics shall be impregnated with epoxy using a mechanical saturation machine. Manual impregnation of fabrics is not allowed. Pre-cured laminates or the dry lay-up method are not permitted.

5. The impregnated fabric shall be pressed onto the substrate to achieve intimate contact. Entrapped air between layers shall be released or rolled out before the resin sets.

6. A thin layer of thickened epoxy shall be applied between all consecutive CFRP layers, over the entire surface.

E. Project Sequencing

1. All components of the lining system, including the primer, thickened epoxy, CFRP and GFRP layers, and topcoat, shall be applied within the allowable time windows recommended by the Manufacturer. If a project delay causes violation of the recommended allowable time windows, the previously applied layer shall be scuff-sanded, all dust shall be removed by compressed air and/or vacuum, and the surface shall be wiped clean with a manufacturer-recommended material before resuming work with application of the subsequent materials and layers.

F. Preparation of Test Samples and Areas

1. The standard of workmanship shall be measured prior to construction through pull-off (bond) testing on representative mock-up areas, and after

construction through tension tests performed on samples cut from witness panels.

a. Representative Mock-Ups for Pull-off (Bond) Testing Prior to Construction

(i) The CFRP INSTALLER shall install two layers of CFRP (oriented 0 and 90 degrees) in at least 2 ft by 2 ft areas in at least one representative location on a pipe adjacent to the repair scope to be used as mock-ups of the installed CFRP system.

(ii) The CFRP INSTALLER shall perform at least three pull-off tests in the presence of the Engineer in each mock-up area according to ASTM D4541 and using testers with documented calibration. The CFRP INSTALLER shall take precautions to ensure proper alignment and shimming of the test fixture to prevent non-perpendicular forces on the test specimen which can produce low bond strength results.

(iii) The Engineer shall evaluate the results as follows:

- Failure within CFRP or at the CFRP- inner concrete interface with pull-off strength greater than 300 psi: Acceptable.

- Failure at the inner concrete surface with pull-off strength less than 300 psi: Rejected. The CFRP INSTALLER shall improve the surface preparation and prepare and test new mock-up areas.

- Failure within CFRP with pull-off strength less than 300 psi: Rejected. The CFRP INSTALLER shall improve the quality of construction and prepare and test new mock-up areas.

(iv) Do not start work until the Engineer (with Owner's approval if necessary) has approved the mock-ups unless the Engineer allows commencement of work prior to testing of mock-ups.

b. Witness Panels for Tension Testing after Construction

(i) The CFRP INSTALLER shall prepare at least two panels per work shift where CFRP installation is taking place made of one layer of CFRP using the same material and techniques used in the actual field installation.

(ii) Place a plastic sheet on a smooth flat horizontal surface (a plastic plate on plywood). Cover the plastic plate with a thin plastic film as release agent. The fabric shall be epoxy coated on the plastic surface using the same amount of epoxy per unit area as would be applied in the actual installation. The samples shall be stored on a rigid level surface in the pipeline or in an area representative of the temperature and humidity conditions in the CFRP repair areas during the curing period or the end of the repair work.

(iii) Label samples with time, date, sample number, fabric lot numbers, resin lot numbers and store in pipe section being repaired. Do not move for a minimum 48 hours after casting.

(iv) Forward any test panels the Engineer intends to have tested to the Testing Agency/ Laboratory retained by the CFRP Installer. The cost of testing shall be incidental to CFRP installation.

(v) Testing lab will prepare test specimens (coupons) from one CFRP witness test panel and test in accordance with ASTM D3039 using nominal material thickness. Each test specimen shall be tested for their material properties in the longitudinal (primary fiber) direction.

(vi) Certified test results shall be provided to the Owner, CFRP INSTALLER and Engineer by the Test Lab within 20 business days of completion of the construction. The testing shall provide values for each specimen as follows:

- Ultimate Tensile Strength
- Tensile Modulus and Related Specimen Thickness
- Percent Elongation

G. Curing

1. All CFRP areas shall be cured using the curing schedule recommended by the Manufacturer in writing and approved by the Engineer prior to Construction.

2. The CFRP INSTALLER's work schedule shall allow sufficient time between completion of repairs and refilling of the pipeline so that all CFRP completes at least 85% cure before being exposed to water based on the cure temperature versus time relationship provided by the Manufacturer unless

adequacy of lesser percent cure is proven by test data. The Engineer shall reject the work schedule is sufficient time for curing is not provided.

3. The Engineer may specify a revised curing schedule during construction, if needed, based on the cure progress reported by the Engineer.

4. Curing shall take place in a dry environment to prevent amine blush. If heating is used, direct-fired gas or kerosene "salamander" type heaters shall not be permitted. Only electric or indirect-fired heaters shall be permitted.

5. Curing at elevated temperatures is strongly encouraged. This not only minimizes the risk of amine blush but reduces the required curing time and increases the glass transition temperature of the epoxy. Satisfactory performance of the curing schedules used shall be proven by the Manufacturer with documentation of previous satisfactory applications or thermal test results indicating the curing behavior of the epoxy.

6. Exhaust fumes from vehicles or equipment shall be kept away from CFRP applied areas during curing.

H. Installation of Joint Seals

1. A termination detail shall be provided to ensure durable water tightness and prevent water from getting behind the CFRP liner.

2. An epoxy mortar consisting of epoxy resin mixed with silica fume and sand shall be used in the joint region to create a smoothly tapered transition between the inner core substrate and the exposed steel substrate. To assure appropriate bond length, care shall be taken to avoid excess spread of the epoxy mortar onto prepared steel substrate. To prevent galvanic corrosion, a layer of epoxy saturated glass fiber reinforced polymer composite (GFRP) shall be applied in direct contact with the steel substrate prior to installation of the CFRP laminate. All layers of the CFRP liner system shall terminate into the joint region.

3. The CFRP liner applicator shall provide and install appropriately sized single band stainless steel expansion rings with ¼ in thick elastomeric rubber strips at the terminations between the CFRP liner and the host piping system. The stainless-steel expansion rings shall be installed in joints at each end of the CFRP upgrade after the CFRP materials have cured sufficiently to avoid damage during joint ring installation. The jacking pressure for the expansion ring shall be selected to achieve a minimum of 150 psi interface pressure in accordance with manufacturer's recommended procedures.

4. After the stainless-steel expansion rings have been installed, the remaining recess in joint region shall be filled back flush with the internal diameter of

the adjacent CFRP lining system using epoxy mortar. The epoxy mortar shall be given sufficient time to cure prior to reinstating water into the pipeline.

I. INSPECTION DURING INSTALLATION

1. CFRP INSTALLER shall submit the Quality Assurance Program (QAP) covering the quality assurance measures imposed on the CFRP INSTALLER's work and imposed upon sub-Suppliers or subcontractors.

2. CFRP INSTALLER shall have at least one field QA/QC personnel throughout the project execution.

3. The Engineer may monitor and document all phases of the construction including material preparation, impregnation of all fabrics, application of all CFRP and GFRP layers, end termination details, curing, and the environmental conditions under which materials were stored and applied. Such inspections may be performed during all shifts of work.

4. The Engineer may inspect the fabric impregnation procedure periodically and observe the CFRP INSTALLER perform a "weight test" at random intervals during all shifts of work. A weight test consists of weighing an approximately 1 ft x 1 ft piece of fabric before and after impregnation in the impregnation machine and ensuring that the fabric-to-resin weight ratio is within the range recommended by the Manufacturer. The CFRP INSTALLER shall adjust the impregnation machine, as necessary.

5. The Engineer may witness preparation of all witness panels by the CFRP INSTALLER and monitor the conditions under which they are stored.

6. The CFRP INSTALLER shall specify corrective actions as necessary and reinspect all items to be corrected.

7. The Engineer may report to the Owner the results of all inspections required in this specification with traceable records, notes, measurements, and photographs. Reported results of bond tests performed on mock-up areas shall indicate the location of test samples, pull-off test equipment used, and failure mode and test result for each sample tested.

J. POST-INSTALLATION INSPECTION AND REPAIR OF DAMAGED OR DEFECTIVE AREAS

1. Inspection for Voids and Delaminations

a. Inspect each repair pipe after the CFRP liner has become tack free to identify imperfections such as voids, delaminations, wrinkles, and raised fabric edges, and to specify corrective actions to be taken by

the CFRP INSTALLER, as necessary. Voids and delaminations shall be identified by dragging a coin or small piece of metal across the CFRP surface and tapping at areas of change in sound, or automated methods approved by the Engineer.

b. Voids requiring corrective action shall be marked and repaired in accordance with paragraph 3.06.B.

c. The Engineer shall also inspect all joints filled with epoxy mortar where CFRP is terminated and check for any sagging or hollow-sounding. If needed, the corrective action for hollow-sounding epoxy mortar shall be removal and replacement.

2. Repair of Delaminated Areas of Installed CFRP Reinforcement

a. Small delaminations less than 2 sq in. each do not require corrective action, as long as the total delaminated area is less than 5% of the total laminate area and there are no more than ten such delaminations per 10 sq ft.

b. Large delaminations, greater than 25 sq in., shall be repaired by selectively cutting away the affected laminate, abrading the surface and wiping the surface of the remaining layers with materials recommended by the Manufacturer and allowed by the Engineer, allowing the surface to dry, applying a coat of thickened epoxy, and applying an overlapping CFRP patch of equivalent layers and fiber orientations.

c. Moderate delaminations less than 25 sq in. shall be repaired by filling the delamination by low-pressure injection of the epoxy resin or by the previous procedure specified for large delaminations.

d. Repair procedures for conditions that are not specifically addressed in this Specification shall be approved by the Engineer.

e. All areas of corrective actions shall be re-inspected.

f. All repairs are to be performed at no cost to the Owner.

3.4 FIELD TESTING / QUALITY CONTROL

A. Maintain the Quality Control records of the work and provide to the Engineer's after completion of the work in accordance with AWWA C305 protocol.

B. Post Construction Design Review for Total Performance

1. The Engineer will perform a post-construction design review to confirm that all completed repairs comply with the stated design life objectives for the Contract

2. The Engineer will advise of any discrepancies between the constructed CFRP and the design requirements.

3. The Contractor shall:

   a. Perform necessary remedial measures to repair ay sections noted as deficient

   b. Review remedial action with the Engineer prior to implementation.

   c. Perform further testing, monitoring and calculations and install structural enhancements at own cost.

SECTION 02610

CFRP TECHNICAL SPECIFICATION

PART 1 - GENERAL

1.1 SUMMARY

A. This Section covers the supply and installation of carbon fiber reinforced polymer (CFRP) and glass fiber reinforced polymer (GFRP) laminate repairs for the rehabilitation of select portions of the SWSC 42" diameter PCCP Raw Water line.

B. This Section is applicable to the designated sections noted herein and on the Contract Drawings that contain existing 42-inch PCCP pipe "sticks" that will be rehabilitated using CFRP or GFRP laminates as defined herein.

1.2 DEFINITIONS

A. CFRP shall include either carbon fiber or glass reinforced polymer systems as defined in AWWA C305 in a prestressed concrete cylinder pipe (PCCP). When used with glass fiber reinforcing schema only, the repairs shall be designated as GFRP. When the term CFRP is used herein, it is understood that all technical and Contractual requirements apply to GFRP repairs as well. The use of CFRP shall be limited to wet lay-up application of CRFP and does not apply to pre-cured laminates adhered to the pipe wall, dry layup applications, nor robotic CFRP applications.

B. Terms pertaining to CFRP shall be as defined in ASTM D883, Standard Terminology for Plastics; ASTM D3878 Standard Terminology for Composite Materials; ASTM D907 Standard Terminology of Adhesives, and the Standard Definitions noted herein and in AWWA C305. When definitions are in conflict, definitions noted in ASTM D3878 shall have precedence.

C. Acceptance Test – A test or a series of tests conducted under actual or simulated field conditions to determine whether a material system or component conforms to specified requirements in a construction or procurement document.

D. Type Tests – Tests carried out under controlled laboratory conditions to demonstrate representative short or long-term structural properties of a product or one of its components.

E. Demonstration Test – A Type or Acceptance Test carried out to demonstrate cause and effect by specified methods; used to establish the relationship between a specific set of procedures to prepare and apply a product and a desired outcome in terms of achieving target mechanical or other properties. For example,

building a test panel to illustrate what combination of surface preparation and application technique/procedures are required to achieve target adhesion values.

F. Material Resistance Adjustment Factor – Factors that define the expected end use condition in terms of the values obtained in Type Testing either due to the difference between controlled laboratory and actual or simulated field conditions or due to long term applied load effects where direct testing is not available.

G. Maximum Allowable Pressure (MAP) – The maximum combination of internal pressures that a pipe or lining system is anticipated to be exposed to including sustained, occasional surge and/or test pressure.

H. Maximum Allowable Operating Pressure (MAOP) – The maximum anticipated sustained internal operating pressure that a pipe system or liner is anticipated to be exposed to.

I. Occasional Surge (emergency or transient) Pressure – Short-term internal pressure events usually caused by emergency operations of the pipe network system (e.g., a rapid valve closure) or malfunction (e.g., power failure, component failure, etc.).

J. Recurring (cyclic) Surge Pressure – Internal surge pressures that occur frequently and are inherent to the design and operation of the pipe network system (such as normal pump start-up or shutdown and normal valve opening or closure). Recurring surge pressure may occur millions of times in a piping system's lifetime.

K. External Load –External loads due to earth pressure, static or fluctuating groundwater levels, or other non-dynamic loading sources.

L. Live Load – Dynamic loads due to vehicles, railways, or airplanes.

M. Loads Due to Thermal Effects – Load induced shear effects due to thermal expansion and contraction of the pipe lining system or bonded liner materials.

1.3 REFERENCE STANDARDS

A. The following reference standards may be applicable to this specification:

1. AWWA C305 CFRP RENEWAL AND STRENGTHENING OF PRESTRESSED CONCRETE CYLINDER PIPE (PCCP)

2. AWWA Manual M11 – Steel Pipe

3. ASTM D638 - Standard Test Methods for Tensile Properties of Plastics

4. ASTM D790 - Standard Test Methods for Flexural Properties of Unreinforced and Reinforced Plastics and Electrical Insulating Materials

5. ASTM D3039 – Standard Test Method for Tensile Properties of Polymer Matrix Composite Materials

6. ASTM D3567 – Standard Practice for Determining Dimensions of "Fiberglass" (Glass-Fiber- Reinforced Thermosetting Resin) Pipe and Fittings

7. ASTM D4541 Standard Test Method for Pull-Off Strength of Coatings Using Portable Adhesion Testers

8. NSF/ANSI Standard 61: Drinking Water System Components – Health Effects

9. AWWA Committee Report "Structural Classifications of Pressure Pipe Linings – Suggested Protocol for Product Classification"

B. All reference standards shall be inferred to be the latest revision of the specific reference standard unless a specific year is specified.

1.4 DESCRIPTION

A. Pre-work Pipe Inspections

1. The CFRP Installer shall enter the pipe and shall positively mark each pipe requiring rehabilitation. Provide access to the Engineer to facilitate inspection and provide records of pre-work inspections.

2. The CFRP Installer shall examine the existing conditions to assess quality of substrate, document any damaged condition, ovality, or surface irregularities in the pipe, and identify any leaks near repair areas. The CFRP Installer shall be responsible to provide a substrate that is sound, visibly dry, and free of moisture.

3. The CFRP Installer shall correct all unsatisfactory conditions and obtain the Engineer's approval prior to commencement of repairs.

B. Cleaning of PCCP Pipes Prior to Repairs

1. This Specification covers the cleaning of the pipelines to be rehabilitated under this Contract by CFRP methods.

2. As CFRP products require bond, cleaning of the host pipe requires surface preparation to assure long term bond to concrete and steel surfaces as noted herein and in AWWA C305.

C. CFRP Laminate Repairs

1. This specification covers the supply and installation of CFRP for repair of select areas. The use of CFRP shall be limited to wet lay-up application of CRFP and does not apply to pre-cured laminates adhered to the pipe wall, dry layup applications, nor robotic CFRP applications.

1.5 QUALIFICATIONS

A. CFRP Laminate Repairs

1. The CFRP INSTALLER must be certified by the MANUFACTURER and have completed a minimum of ten (10) independent installations of CFRP involving internal pipe rehabilitation projects in the past five years. For a project to be considered applicable, it must involve the following: internal application of CFRP on pipelines greater than 30 inch diameter, with pressures greater than 30 psi operating pressure, where the same CFRP system proposed for use on this project has been used as a stand-alone upgrade of the pipeline without reliance on the host pipe for structural integrity. The minimum project length shall be a single pipe stick of repair. Provide a list of project references meeting above requirement - with OWNER'S contact information for each project in accordance with Section 01300 Submittals after bid award.

2. The CFRP System MANUFACTURER shall specialize in the supply of the products specified with documented experience and written verification that the CFRP INSTALLER personnel are trained and certified in the use of the proposed CFRP system.

3. Certification that the foreman, head supervisor, and designated carbon fiber installation technicians who will perform the work for the OWNER have a minimum of 3 years of experience in man-entry pipe repair projects using CFRP, with a minimum of 5 internal pipe repair projects using CFRP per worker. A list of names, titles and projects shall be provided in accordance with Section 01300 Submittals after bid award.

4. CFRP INSTALLER workforce is to self-perform the CFRP installation and all associated work tasks as outlined in Division 1 General Requirements of the specification.

5. CFRP INSTALLER is to provide documentation confirming that they will provide ancillary equipment for the project including surface preparation equipment, ventilation, environmental controls units and generators. Include information on the equipment models for each typically utilized. Provide as a submittal in accordance with Section 01300 after bid award.

6. CFRP INSTALLER shall provide a letter from their surety company confirming that they can furnish a five-year warranty as described in section 3.09 of this specification. Provide as a submittal in accordance with Section 01300 Submittal after bid award.

7. CFRP INSTALLER shall provide, prior to formal award of the contract, a list of any projects where the installed CFRP system failed, did not perform as intended (leak, rupture, CFRP disbonded/had to be removed during or after installation, etc.), or where work was halted or abandoned prior to completion of the originally contracted scope of work. Provide owner contact information for any of the above referenced projects. If no projects occurred which meet these criteria, a letter stating such shall be provided. Failure to disclose or misrepresentation of this information shall be grounds for disqualification.

8. Safety: CFRP INSTALLER shall submit notarized documentation of the following in the name of the legal entity bidding, for the prequalified CFRP INSTALLER in accordance with Section 01300 Submittals after bid award:

   a. Experience Modification Rates (EMR) for worker's compensation insurance for the last three (3) years with no year indicating an EMR above 1.5. A letter from company's surety must also be provided verifying this information and it must match the legal entity bidding the project.

   b. OSHA TRIR for the last three (3) years with no year indicating a TRIR above 2.0 for the same legal entity bidding the project.

1.6 QUALITY ASSURANCE

A. The successful implementation of CFRP systems as repair of a steel host pipe is governed by the assurance of quality installation procedures and adherence to the approved specification and drawings. Thus, four components are interwoven to define quality CFRP system installations, and they are design, materials, installation, and quality control.

B. The CFRP system design shall be completed in accordance with the AWWA C305 Standard by an experienced designer, familiar with both the behavior of steel pipe and the application of CFRP systems for pipeline repair and rehabilitation.

C. The CFRP system materials shall meet the requirements as set forth in Sec. 3 of AWWA C305. Assurance that CFRP system materials will meet the design life expectancy is driven by the ability to provide material testing that justifies the service life desired in accordance with Sec. 3.3 of AWWA C305.

D. Appropriate quality control measures shall be taken throughout the installation phase as detailed in this Section and in Section 4 of AWWA C305. This includes installation procedures (Sec. 4.4), effective testing (Sec. 4.5), and inspection (4.7). Testing, including material strength tests and bonding to the substrate tests, are detailed in Sec. 3.3 and Sec. 3.7.3. The CFRP system inspection requirements, as described in 4.7, place a high degree of responsibility for quality installation on the inspectors and best practices. In order to ensure that the inspection is performed by a qualified inspector who can verify that a quality installation takes place, the inspectors shall meet the requirements of Sec. 4.7 of AWWA C305.

1.7 SUBMITTALS

A. CFRP Submittals

1. CFRP Material Data – Prior to Design

a. The Manufacturer shall provide the Engineer with product data sheets indicating physical, mechanical, and chemical characteristics of all materials used in the CFRP system. As a minimum, the Engineer shall be provided with the mechanical properties of the CFRP laminate, durability of the CFRP laminate based on the environmental conditions, and the physical properties of the resin.

b. The test reports shall clearly indicate the commercial names of the products used, batch ID, sample dimensions, number of samples tested, number of fabric layers used, load and strain measurement techniques, failure modes, and obtained strength, modulus, and ultimate elongation for each sample tested.

c. The Manufacturer shall provide documents indicating that all materials comply with the requirements of NSF 61 and NSF 61 Annex G. A printout from the NSF website, dated within one week of the due date, shall be submitted.

d. The Manufacturer shall provide documents indicating that all materials meet OSHA, EPA, and local ordinances for health and safety including VOC compliance.

e. Testing report demonstrating water tightness of the proposed CFRP system a minimum of twice the maximum design pressure of the pipeline. The testing report shall demonstrate that the proposed layup for the CFRP system does not leak when subject to twice the maximum design pressure of the pipeline.

f. Written verification from the MANUFACTURER regarding acceptable cure temperatures and time as well as allowable time window between installation of different layers.

2. By the CFRP MANUFACTURER and CFRP INSTALLER – Prior to Construction

a. Document indicating agreement of the CFRP system manufacturer to have at least one field QA/QC personnel throughout the project execution.

b. Manufacturer's Material Safety Data Sheets (MSDS) for all materials to be used.

c. Application instructions, delivery, storage and handling instructions, and general recommendations regarding each material to be used.

d. General Confined Space Entry procedure. Upon award of assignment CFRP INSTALLER shall submit confined entry procedure specific to job.

e. CFRP INSTALLER shall submit a Job Hazard Analysis specific to job.

3. Working Drawings, Calculations and Methods Statements:

a. Working Drawings Shall Provide the Following:

(i) Type of Carbon Reinforcement Fabric Composite System.

(ii) Product Name of Reinforcing Fabric(s).

(iii) Product Name of Saturating Epoxy, the Primer Epoxy, and the Topcoat Epoxy.

(iv) Weight of fabric, number of layers and orientation.

(v) Minimum overlap circumferentially and longitudinally.

(vi) Repair procedures and details for damaged fabric layers.

(vii) Detail of proposed method of terminating carbon fiber-reinforced composite to provide a watertight seal that prevents any water from penetrating between the carbon fiber-reinforced composite layers and the end terminations of the existing pipe. At a minimum, stainless steel expansion

rings shall be included at each end termination for the CFRP system.

4. Working Calculations Shall Provide the Following:

   a. Type of Carbon Reinforcement Fabric Composite System.

   b. Product Name of Reinforcing Fabric(s).

   c. Product Name of Saturating Epoxy.

   d. The composite material properties used in the design calculations. The properties used shall be equal to or more conservative than the properties listed on the product data sheets for the materials used.

   e. The design requirements utilized in the design calculations shall be equal to or greater than the design requirements provided by Engineer and shall incorporate details provided in Section 2.01 of this specification.

   f. Calculations associated with each of the design limit states outlined in Section 2.1 of this specification.

   g. Submit the design calculations in accordance with the specified requirements herein and sealed and signed by a Registered Professional Engineer licensed to practice in the Commonwealth of Massachusetts.

5. MANUFACTURER'S written installation procedures, maintenance instructions, and general recommendations regarding the overall system and each material to be used including:

   a. Method for preparing surfaces to accept CFRP.

   b. Method, equipment, and procedures to be used to apply CFRP.

   c. Method and drawings detailing transition of new CFRP lining to existing pipe.

6. Implementation Plan

   a. Submit an Implementation Plan describing the inspection of the installation. The submittal shall include the following:

      (i) Names of key personnel (foreman, head supervisor and top three carbon fiber installation technicians) scheduled to perform the work. Documentation that all workers who plan to work on the pipeline have received annual first aid

training, confined space training and MANUFACTURER provided certified applicator training shall also be provided.

(ii) Name of personnel responsible for quality assurance.

(iii) Testing program for CFRP system.

(iv) Surface evaluation procedure.

(v) Material testing of CFRP.

(vi) Method for ensuring that the adhesion of CFRP epoxy will conform to specified and indicated requirements.

(vii) Methods for repairing defective linings.

(viii) Contingency plan to meet specified requirements in the event of an interruption to the CFRP placement.

7. CFRP INSTALLER shall prepare and submit a detailed schedule describing the work to be accomplished prior to the start of the shutdown and work to be accomplished during each shift during the shutdown. Detail daily activities and manpower used at each site. If Engineer deems any schedule to be inadequate to secure the completion of work in the time submittal, correct and re-submit schedules to change the order of prosecution of work to ensure proper and timely execution.

8. Record Submittals

a. Submit Quality Control Records, and Acceptance Test records in a report within 30 days of completion of each liner installation.

B. Shop Drawings

1. Submit shop drawings for all CFRP Sections including termination details

PART 2 PRODUCTS

2.1 CFRP DESIGN

A. Design Objectives

1. Class IV CFRP Liner: The CFRP Liner shall meet Class IV requirements for the stated design conditions in accordance with AWWA's Structural Classifications of Pressure Pipe Linings, Suggested Protocol for Product Classification. The design requirements of the liner system shall:

a. Provide an internal corrosion barrier for the host pipe.

b. Have the ability to span holes, gaps, and defects in the host pipe.

c. Have inherent ring stiffness such they do not collapse or appreciably change shape when dewatered.

d. Have a long-term independent pressure rating greater than the specified MAOP for the system.

e. Meet system identified constraints for Occasional and Recurrent Surge Pressures.

f. Be able to survive a burst failure of the host pipe.

g. Maximize the structural enhancement of the composite liner-host pipe by providing a close-fit with the host pipe.

h. Eliminate leakage in the host pipe by providing a liner with adequate hydrostatic integrity and a liner system design that prevents migration of water between the liner and the host pipe emanating from reinstated service connections.

i. Have a means of long-term restraint in the axial direction to preclude differential movement between the host pipe and the liner.

j. Maximize hydraulic efficiency by providing a smooth flow channel and minimal reduction of bore in the rehabilitated system.

k. Select a Class IV liner product and plan approach to rehabilitation toward maximizing the achievement of these design objectives.

B. Limit States Design Approach

1. The CFRP system shall be designed in accordance with AWWA C305 for each of the following potential limit states:

a. Rupture of CFRP laminate in the circumferential direction due to internal pressure.

b. Rupture of CFRP laminate in the circumferential direction due to bending of empty pipe.

c. Rupture of CFRP laminate in the circumferential direction due to combined pressure and bending due to gravity loads.

d. Buckling of the CFRP laminate in the circumferential direction due to external loads and pressures and internal negative pressure.

e. Rupture of the CFRP laminate in the longitudinal direction due to pressure induced thrust, Poisson's effect of internal pressure, and temperature change.

f. Interlaminar shear failure of CFRP at pipe ends.

g. Buckling of the CFRP laminate in the longitudinal direction due to temperature change.

C. Design Requirements

1. Project Specific Requirements:

a. Design CFRP as detailed in AWWA C305, with the following minimum design assumptions applied:

(i) Circumferential Design Loads:

- Internal working pressure, P_w = 150 psi
- Internal transient pressure (in excess of P_w), P_t = 60 psi
- Internal vacuum pressure, P_v = -14.7 psi (full vacuum)
- Soil cover height, H = 4.5 ft minimum per drawings,
- Height of groundwater, H_w = at ground surface
- Live load = HS-20 design truck
- Constrained sol modulus, M_s = 1,000 psi
- Installation Temperature: 70°F
- Normal Operating Temperature: 40 - 90°F
- Load and resistance factors in accordance with AWWA C305.

(ii) Longitudinal Design Loads

- Internal pressure only (pressure-induced thrust force and Poisson's effect);
- Temperature difference, ΔT (for empty pipe cooling or warming up, not less than ±40F°);
- Combined internal pressure and temperature.

(iii) End Termination

- CFRP shall be terminated with end details that prevent water from getting behind the CFRP liner, including the use of steel expansion rings per Part 2.5.B. The end detail shall include a minimum of one layer of GFRP between the expansion ring and CFRP layers.

D. Existing System Design Conditions

1. Refer to the contract drawings for the location of the four pipes to be lined with CFRP. The four pipes are: 6-22, 9-15, 9-17 and 9-18.

2. Pipe 6-22 is a LCP150 and pipes 9-15, 9-17 and 9-18 are all ECP225.

3. None of the four pipes are reported to have any prestressing wire breaks based on recent electromagnetic inspection results. All four pipes exhibit longitudinal hairline cracks.

4. Refer to the Laying Schedules and Pipe Manufacturing Specifications included in the project specifications.

5. The CFRP liner shall be designed as a stand-alone buried flexible pipe (i.e., CFRP carrying 100% of the internal and external loads acting on the pipe).

E. Site Specific Design Requirements

1. Refer to Drawings and Contract documents for designated repair and pipe access locations.

2.2 CFRP SYSTEM

A. The CFRP system shall consist of epoxy primer, thickened epoxy (i.e., putty), unidirectional carbon fabric, impregnating epoxy resin, and topcoat. Other resin types (e.g., polyester, vinyl ester) shall not be used as any of these components.

B. Primer

1. The PCCP pipe substrate shall be primed with an epoxy material, which shall penetrate the pore structure of the substrate. The primer shall be 100% solids, low viscosity epoxy resin.

2. The primer shall have following minimum properties obtained according to ASTM D638 at 72°F and 40% relative humidity:

3. Tensile strength: 2,500 psi, minimum

4. Tensile modulus: 105 ksi, minimum

C. Thickened Epoxy

1. Thickened epoxy shall have a high enough viscosity to fill all voids in the PCCP substrate and provide a smooth base for the subsequent CFRP laminates.

2. Thickened epoxy shall either be pre-formulated and brought to site in pre-proportioned containers or prepared on site by mixing the impregnating resin with Cab-O-Sil TS-720, or approved equal, treated fumed silica to achieve the required viscosity.

D. Impregnating Resin

1. All fabrics shall be impregnated with 100% solids, low viscosity epoxy resin.

2. The CFRP repair design shall use a two-component epoxy with the following mechanical properties obtained according to ASTM D638 at 72°F and 40% relative humidity and reported by the Manufacturer:

   a. Maximum water absorption when tested in accordance with ASTM D570 (24 hours): 2 percent

   b. Minimum compressive yield strength of 10,000 psi when tested in accordance with ASTM D695 (75F, 7-day cure)

   c. Minimum tensile strength with an elongation of greater than 2 percent when tested in accordance with ASTM D638 (14-day cure): 6,000 psi

   d. Tensile modulus: 300 ksi

   e. Minimum flexural strength when tested in accordance with ASTM D790 (14-day cure): 7,500 psi

E. Carbon Fiber-Epoxy Laminates

1. The CFRP rehabilitation design shall use carbon fiber composite laminates with the following mechanical and physical properties:

   a. The tensile properties of the CFRP lamina shall be determined according to ASTM D3039 and statistically analyzed according to ASTM D7290 to determine the characteristic values.

   b. Minimum tensile modulus of elasticity (ASTM D7290): 9,000 ksi

   c. Minimum laminate thickness: 0.07 inch

   d. Maximum laminate thickness: 0.10 inch

   e. Minimum tensile strength (ASTM D7290): 100 ksi;

f. Minimum flexural modulus of 350,000 psi

g. Minimum flexural strength of 14,000 psi

h. Minimum strain at CFRP rupture, when tested in accordance with ASTM D3039: 0.85 percent (obtained as the ratio of characteristic tensile strength and Weibull mean of the modulus)

2.3 STAND-ALONE GFRP DESIGN CRITERIA

A. Design Objectives

1. Non-structural Class I Liner: The GFRP Liner shall meet Class I requirements for the stated design conditions in accordance with AWWA's Structural Classifications of Pressure Pipe Linings, Suggested Protocol for Product Classification. The design requirements of the liner system shall:

   a. Protect the host pipe from internal erosion-corrosion and to resist any deleterious reaction with the fluid being conveyed for the stipulated design life.

2. Design Approach

   a. The minimum number of GFRP layers and overall thickness required shall ensure that the lining has sufficient adhesion strength to resist negative pressures (vacuum), thermal stresses and shear stresses where relevant, and provide resistance to erosion-corrosion for the stipulated design life.

3. Design Requirements

   a. Refer to the applicable portions of Section 2.1 C relating to the design of a non-structural Class I liner.

   b. Design GFRP in conjunction with the host pipe with the following minimum design assumptions applied:

      (i) Circumferential Design Loads:

      - Internal working pressure, P_w = 150 psi
      - Internal transient pressure (in excess of P_w), P_t = 60 psi
      - Internal vacuum pressure, P_v = -14.7 psi (full vacuum)
      - Installation Temperature: 70°F
      - Normal Operating Temperature: 40 - 90°F

(ii) Longitudinal Design Loads

- Internal pressure only (pressure-induced thrust force and Poisson's effect);
- Temperature difference, ΔT (for empty pipe cooling or warming up, not less than ±40F°);
- Combined internal pressure and temperature.

(iii) End Termination

- GFRP shall be terminated with end details that prevent water from getting behind the GFRP liner, including the use of steel expansion rings per Part 2.5.B.

4. Site Specific Design Requirements

a. Refer to Drawings and Contract documents for designated repair and pipe access locations.

2.4 GFRP COMPOSITE SYSTEM

A. A glass fiber reinforced polymer (GFRP) composite system shall be used as insulator between any steel components and CFRP to avoid possible galvanic corrosion and also shall be used as a watertightness layer.

B. The GFRP composite system shall be a designed system consisting of all associated fiber reinforcement and polymer adhesives/resins. All components of the GFRP composite system shall be provided by the same Manufacturer of CFRP system. The GFRP composite laminates shall have the following mechanical and physical properties:

1. Minimum tensile modulus of elasticity: 2,000 ksi
2. Minimum laminate thickness: 0.01 inch
3. Maximum laminate thickness: 0.10 inch
4. Minimum tensile strength: 30 ksi
5. Minimum strain at GFRP rupture (ASTM D3039): 1.0 percent

2.5 PROTECTIVE COATINGS

A. Topcoat

1. The CFRP system shall be top-coated with a coating recommended by the CFRP system Manufacturer and in conformance with the following:

   a. The topcoat shall consist of the same thickened epoxy used between the CFRP layers or potable water coating, if needed.

   b. Seams in fabric and edges shall be smoothened with thickened epoxy prior to application of the topcoat.

   c. The topcoat material shall have been used successfully as a finished assembly on a minimum of five past documented pipe strengthening projects.

2. Topcoat shall be installed in accordance with the Manufacturer's published installation instructions. The duration elapsed between the application of the last CFRP layer and the topcoat shall not exceed the time specified by the Manufacturer.

2.6 OTHER MATERIALS

A. Epoxy Mortar

1. Epoxy mortar shall consist of one-part mixed epoxy combined with five parts sand or equivalent demonstrated to have the ability to bond to concrete, steel, and CFRP in overhead and all other positions.

B. Steel Expansion Ring

1. Internal Joint Seal stainless steel expansion ring (Weko Seal or equal) with a 1/4 in. rubber strip expanded against pipe wall to achieve minimum 100 psi interface pressure. All expansion rings, wedges, and shims shall conform to the grade recommended by the Manufacturer for the expected exposure condition and to ASTM A240.

2.7 DELIVERY, STORAGE AND HANDLING

A. Delivery

1. The products shall be delivered in original, unopened containers. Containers shall be clearly marked with legible and intact labels listing the Manufacturer's name, brand name, product identification, batch number, storage conditions, mixing ratios, and shelf-life.

B. Storage

1. Storage of all materials and equipment on site shall be in areas and using designated access locations.

2. Store materials in areas where temperatures conform to Manufacturer's written recommendations and instructions.

3. Stored fiber reinforcement and resins shall be protected from dust, moisture, and chemical exposure.

4. Resin components shall be stored separately and in tightly closed containers, away from direct sunlight, flame sources, or other hazards.

5. Fiber reinforcement and resins shall not be exposed to freezing temperatures during transport, storage, preparation, installation or curing.

C. Handling

1. The fabric reinforcement shall not be handled roughly. Care shall be taken not to damage the fibers.

2. Fabric reinforcement may be stored either in rolls of 4 in. radius or greater or stacked after cutting.

3. Consult the Manufacturer's MSDS for specific handling hazards of resin components.

PART 3 EXECUTION

3.1 GENERAL PROCEDURES

A. Work only in areas permitted by the Engineer.

B. CFRP INSTALLER shall request approval to work outside of the standard work hours, if necessary, as outlined in Section 01046.

C. Remove all tools, buckets, and materials from work areas and store neatly at a central location daily at the end of work. Clean work areas shall be maintained during construction activities.

D. Protect adjacent areas from damage, stains, and spillage during delivery of material to repair areas. Repair any damage that occur as a result of this Work to pre-construction condition or an approved betterment at no cost to the Engineer.

E. Protect the work from damage such as impact, marring of the surfaces, and other damage.

F. Materials may be skin irritants or sensitizers. Accordingly, advise CFRP INSTALLER to avoid contact with eyes and skin, inhalation of vapors, and ingestion. Use protective and safety equipment on site. Heed all label warnings by manufacturers. Make application in accordance with applicable safety laws.

G. Compliance with OSHA and other safety laws and regulations is the exclusive responsibility of the CFRP INSTALLER, his suppliers, consultants, and workers.

H. Prevent hazardous accumulations of dusts, fumes, mists, vapors, or gases in areas occupied during construction. Provide local exhaust ventilation to prevent harmful dispersal of hazardous substances into atmosphere of occupied areas. Dispose in manner that will not result in harmful exposure to persons. Ventilate storage spaces containing hazardous or volatile materials. Provide dust and fume control, including, but not limited to, temporary protection and confinement barriers, ventilation equipment and procedures, and air-quality-monitoring equipment and procedures. Monitor air quality in the work area, and inside the pipeline. Comply with the requirements of all local governing regulatory agencies.

I. Ventilation inside the pipeline shall be per all OSHA requirements, including but not limited to OSHA confined space entry and underground construction requirements.

3.2 PREPARATION

A. Environmental Conditions

1. Do not install CFRP when the ambient temperature is outside the range required by the Manufacturer, the relative humidity is outside the range required by the Manufacturer, and the pipe surface temperature is less than 5°F above the dewpoint. In cold conditions, auxiliary heat may be applied to raise the ambient temperature to a suitable level. If heating is used, direct-fired gas or kerosene "salamander" type heaters shall not be permitted. Only electric or indirect-fired heaters shall be permitted, to avoid contaminating the substrate with carbonation.

2. The presence of water inhibits the adhesion of epoxy to the substrate and may contribute to the formation of amine blush. Do not install CFRP when surface moisture is present. Use dehumidifiers to keep the relative humidity within the range required by the Manufacturer. There shall be no standing water in the pipe.

3. If water leakage exists through cracks or joints, water flow shall be stopped by the CFRP INSTALLER.

B. Site Conditions

1. The CFRP INSTALLER shall employ a confined space entry procedure which will require an entry permit according to OSHA regulations.

2. Maintain control of dust, and debris due to mortar lining repair or surface preparation in each area of work. Clean up and remove such material at the

3.3 INSTALLATION

A. Substrate Repair

1. All problems associated with the condition of the original substrate that can compromise the integrity of the CFRP system shall be addressed before surface preparation begins. The Manufacturer shall be consulted on the compatibility of the CFRP system with materials used for repairing the substrate.

2. Voids in the substrate shall be filled. Small voids no more than 0.50 in. in depth shall be filled with a thickened epoxy and larger voids with epoxy mortar.

B. Surface Preparation

1. All surfaces to receive CFRP shall be prepared. For the inner core concrete of PCCP, the concrete substrate shall be profiled using abrasive blasting to remove all contaminants (laitance, surface lubricants, broken mortar pieces, etc.) and to achieve a minimum profile of ICRI CSP 3 (refer to ICRI Guideline No. 03732).

2. For the end termination area, the steel cylinder shall be exposed, and the steel substrate shall be abrasively blasted to achieve SSPC SP-10 near white metal surface prior to installing the CFRP system.

3. Any holes or leaks in the pipelines shall be addressed as needed prior to application of the CFRP lining system.

4. The surfaces to which the CFRP system is to be applied shall be freshly exposed, free of loose or unsound materials, and shall be allowed to dry prior to CFRP installation.

5. Localized out-of-plane variations, such as form lines, sharp edges, and protrusions, shall not exceed ¼ in. Such out-of-plane variations can be removed by grinding, abrasive-blasting, or can be smoothed over using thickened epoxy if variations are very small.

6. All debris and dust generated during surface preparation shall be removed by air blasting or other approved means to achieve a dust free concrete surface.

C. Mixing of Resins

1. The resin and its catalyst shall be kept in tightly closed containers at all times except for the time of mixing to prevent absorption of carbon dioxide and moisture which could lead to amine blush. The mixing technique shall not cause air entrainment in the resin system.

2. All resins shall be mixed according to the Manufacturer's instructions. All resin components shall be at a proper temperature and mixed from pre-proportioned and pre-packaged containers until there is a uniform and complete mixing of components. On-site proportioning of resin components is not allowed. Resins shall be mixed for the Manufacturer's prescribed mixing time and visually inspected for uniformity of color.

3. Mixed resin that exceeds the pot life specified by the Manufacturer shall not be used.

D. Application of CFRP System by the Wet Lay-up Technique

1. The application of the CFRP system shall be performed in accordance with the Manufacturer's published installation instructions.

2. The CFRP system primer shall be applied to all areas on the existing pipe surface where the CFRP system is to be placed. The primer shall be placed uniformly on the prepared surface at the Manufacturer's specified rate of coverage. The primer shall be allowed to cure in accordance with the CFRP Manufacturer's installation instructions before applying subsequent materials.

3. Following the primer, all voids in the substrate shall be filled to achieve a smooth surface using thickened epoxy.

4. All fabrics shall be impregnated with epoxy using a mechanical saturation machine. Manual impregnation of fabrics is not allowed. Pre-cured laminates or the dry lay-up method are not permitted.

5. The impregnated fabric shall be pressed onto the substrate to achieve intimate contact. Entrapped air between layers shall be released or rolled out before the resin sets.

6. A thin layer of thickened epoxy shall be applied between all consecutive CFRP layers, over the entire surface.

E. Project Sequencing

1. All components of the lining system, including the primer, thickened epoxy, CFRP and GFRP layers, and topcoat, shall be applied within the allowable time windows recommended by the Manufacturer. If a project delay causes violation of the recommended allowable time windows, the previously

applied layer shall be scuff-sanded, all dust shall be removed by compressed air and/or vacuum, and the surface shall be wiped clean with a manufacturer-recommended material before resuming work with application of the subsequent materials and layers.

F. Preparation of Test Samples and Areas

1. The standard of workmanship shall be measured prior to construction through pull-off (bond) testing on representative mock-up areas, and after construction through tension tests performed on samples cut from witness panels.

a. Representative Mock-Ups for Pull-off (Bond) Testing Prior to Construction

(i) The CFRP INSTALLER shall install two layers of CFRP (oriented 0 and 90 degrees) in at least 2 ft by 2 ft areas in at least one representative location on a pipe adjacent to the repair scope to be used as mock-ups of the installed CFRP system.

(ii) The CFRP INSTALLER shall perform at least three pull-off tests in the presence of the Engineer in each mock-up area according to ASTM D4541 and using testers with documented calibration. The CFRP INSTALLER shall take precautions to ensure proper alignment and shimming of the test fixture to prevent non-perpendicular forces on the test specimen which can produce low bond strength results.

(iii) The Engineer shall evaluate the results as follows:

- Failure within CFRP or at the CFRP- inner concrete interface with pull-off strength greater than 300 psi: Acceptable.

- Failure at the inner concrete surface with pull-off strength less than 300 psi: Rejected. The CFRP INSTALLER shall improve the surface preparation and prepare and test new mock-up areas.

- Failure within CFRP with pull-off strength less than 300 psi: Rejected. The CFRP INSTALLER shall improve the quality of construction and prepare and test new mock-up areas.

(iv) Do not start work until the Engineer (with Owner's approval if necessary) has approved the mock-ups unless the Engineer allows commencement of work prior to testing of mock-ups.

b. Witness Panels for Tension Testing after Construction

(i) The CFRP INSTALLER shall prepare at least two panels per work shift where CFRP installation is taking place made of one layer of CFRP using the same material and techniques used in the actual field installation.

(ii) Place a plastic sheet on a smooth flat horizontal surface (a plastic plate on plywood). Cover the plastic plate with a thin plastic film as release agent. The fabric shall be epoxy coated on the plastic surface using the same amount of epoxy per unit area as would be applied in the actual installation. The samples shall be stored on a rigid level surface in the pipeline or in an area representative of the temperature and humidity conditions in the CFRP repair areas during the curing period or the end of the repair work.

(iii) Label samples with time, date, sample number, fabric lot numbers, resin lot numbers and store in pipe section being repaired. Do not move for a minimum 48 hours after casting.

(iv) Forward any test panels the Engineer intends to have tested to the Testing Agency/ Laboratory retained by the CFRP Installer. The cost of testing shall be incidental to CFRP installation.

(v) Testing lab will prepare test specimens (coupons) from one CFRP witness test panel and test in accordance with ASTM D3039 using nominal material thickness. Each test specimen shall be tested for their material properties in the longitudinal (primary fiber) direction.

(vi) Certified test results shall be provided to the Owner, CFRP INSTALLER and Engineer by the Test Lab within 20 business days of completion of the construction. The testing shall provide values for each specimen as follows:

- Ultimate Tensile Strength
- Tensile Modulus and Related Specimen Thickness
- Percent Elongation

G. Curing

1. All CFRP areas shall be cured using the curing schedule recommended by the Manufacturer in writing and approved by the Engineer prior to Construction.

2. The CFRP INSTALLER's work schedule shall allow sufficient time between completion of repairs and refilling of the pipeline so that all CFRP completes at least 85% cure before being exposed to water based on the cure temperature versus time relationship provided by the Manufacturer unless adequacy of lesser percent cure is proven by test data. The Engineer shall reject the work schedule is sufficient time for curing is not provided.

3. The Engineer may specify a revised curing schedule during construction, if needed, based on the cure progress reported by the Engineer.

4. Curing shall take place in a dry environment to prevent amine blush. If heating is used, direct-fired gas or kerosene "salamander" type heaters shall not be permitted. Only electric or indirect-fired heaters shall be permitted.

5. Curing at elevated temperatures is strongly encouraged. This not only minimizes the risk of amine blush but reduces the required curing time and increases the glass transition temperature of the epoxy. Satisfactory performance of the curing schedules used shall be proven by the Manufacturer with documentation of previous satisfactory applications or thermal test results indicating the curing behavior of the epoxy.

6. Exhaust fumes from vehicles or equipment shall be kept away from CFRP applied areas during curing.

H. Installation of Joint Seals

1. A termination detail shall be provided to ensure durable water tightness and prevent water from getting behind the CFRP liner.

2. An epoxy mortar consisting of epoxy resin mixed with silica fume and sand shall be used in the joint region to create a smoothly tapered transition between the inner core substrate and the exposed steel substrate. To assure appropriate bond length, care shall be taken to avoid excess spread of the epoxy mortar onto prepared steel substrate. To prevent galvanic corrosion, a layer of epoxy saturated glass fiber reinforced polymer composite (GFRP) shall be applied in direct contact with the steel substrate prior to installation of the CFRP laminate. All layers of the CFRP liner system shall terminate into the joint region.

3. The CFRP liner applicator shall provide and install appropriately sized single band stainless steel expansion rings with ¼ in thick elastomeric rubber strips at the terminations between the CFRP liner and the host piping system. The stainless-steel expansion rings shall be installed in joints at each end of the CFRP upgrade after the CFRP materials have cured sufficiently to avoid damage during joint ring installation. The jacking pressure for the expansion ring shall be selected to achieve a minimum of 150 psi interface pressure in accordance with manufacturer's recommended procedures.

4. After the stainless-steel expansion rings have been installed, the remaining recess in joint region shall be filled back flush with the internal diameter of the adjacent CFRP lining system using epoxy mortar. The epoxy mortar shall be given sufficient time to cure prior to reinstating water into the pipeline.

I. INSPECTION DURING INSTALLATION

1. CFRP INSTALLER shall submit the Quality Assurance Program (QAP) covering the quality assurance measures imposed on the CFRP INSTALLER's work and imposed upon sub-Suppliers or subcontractors.

2. CFRP INSTALLER shall have at least one field QA/QC personnel throughout the project execution.

3. The Engineer may monitor and document all phases of the construction including material preparation, impregnation of all fabrics, application of all CFRP and GFRP layers, end termination details, curing, and the environmental conditions under which materials were stored and applied. Such inspections may be performed during all shifts of work.

4. The Engineer may inspect the fabric impregnation procedure periodically and observe the CFRP INSTALLER perform a "weight test" at random intervals during all shifts of work. A weight test consists of weighing an approximately 1 ft x 1 ft piece of fabric before and after impregnation in the impregnation machine and ensuring that the fabric-to-resin weight ratio is within the range recommended by the Manufacturer. The CFRP INSTALLER shall adjust the impregnation machine, as necessary.

5. The Engineer may witness preparation of all witness panels by the CFRP INSTALLER and monitor the conditions under which they are stored.

6. The CFRP INSTALLER shall specify corrective actions as necessary and reinspect all items to be corrected.

7. The Engineer may report to the Owner the results of all inspections required in this specification with traceable records, notes, measurements, and

photographs. Reported results of bond tests performed on mock-up areas shall indicate the location of test samples, pull-off test equipment used, and failure mode and test result for each sample tested.

J. POST-INSTALLATION INSPECTION AND REPAIR OF DAMAGED OR DEFECTIVE AREAS

1. Inspection for Voids and Delaminations

a. Inspect each repair pipe after the CFRP liner has become tack free to identify imperfections such as voids, delaminations, wrinkles, and raised fabric edges, and to specify corrective actions to be taken by the CFRP INSTALLER, as necessary. Voids and delaminations shall be identified by dragging a coin or small piece of metal across the CFRP surface and tapping at areas of change in sound, or automated methods approved by the Engineer.

b. Voids requiring corrective action shall be marked and repaired in accordance with paragraph 3.06.B.

c. The Engineer shall also inspect all joints filled with epoxy mortar where CFRP is terminated and check for any sagging or hollow-sounding. If needed, the corrective action for hollow-sounding epoxy mortar shall be removal and replacement.

2. Repair of Delaminated Areas of Installed CFRP Reinforcement

a. Small delaminations less than 2 sq in. each do not require corrective action, as long as the total delaminated area is less than 5% of the total laminate area and there are no more than ten such delaminations per 10 sq ft.

b. Large delaminations, greater than 25 sq in., shall be repaired by selectively cutting away the affected laminate, abrading the surface and wiping the surface of the remaining layers with materials recommended by the Manufacturer and allowed by the Engineer, allowing the surface to dry, applying a coat of thickened epoxy, and applying an overlapping CFRP patch of equivalent layers and fiber orientations.

c. Moderate delaminations less than 25 sq in. shall be repaired by filling the delamination by low-pressure injection of the epoxy resin or by the previous procedure specified for large delaminations.

d. Repair procedures for conditions that are not specifically addressed in this Specification shall be approved by the Engineer.

e. All areas of corrective actions shall be re-inspected.

f. All repairs are to be performed at no cost to the Owner.

3.4 FIELD TESTING / QUALITY CONTROL

A. Maintain the Quality Control records of the work and provide to the Engineer's after completion of the work in accordance with AWWA C305 protocol.

B. Post Construction Design Review for Total Performance

1. The Engineer will perform a post-construction design review to confirm that all completed repairs comply with the stated design life objectives for the Contract

2. The Engineer will advise of any discrepancies between the constructed CFRP and the design requirements.

3. The Contractor shall:

a. Perform necessary remedial measures to repair ay sections noted as deficient

b. Review remedial action with the Engineer prior to implementation.

c. Perform further testing, monitoring and calculations and install structural enhancements at own cost.

SECTION 02611

SUPPLY AND INSTALLATION OF INTERNAL PIPE JOINT SEALS

PART 1 - GENERAL

1.01 DESCRIPTION:

A. This Section includes the minimum requirements for pressure testing of circumferential pipe joints and any circumferential cracks in the 42-inch Raw Water Bypass Conveyance Pipeline.

B. Furnish all materials, equipment, labor, supervision, requirements for safety, and all other expense required for the satisfactory performance of all Work.

C. Complete the supply and installation of internal pipe joint seals in accordance with this Section and the written instructions of the seal manufacturer. Where a discrepancy exists between this Section and the written instructions of the seal manufacturer, the most stringent requirement will apply.

D. In general, the Work will consist of the following major tasks:

1. Mobilize crew and equipment to and from project site.

2. Perform confined space entry work to enable and support the installation of seals in the conduits, including provision of all workers and equipment needed to undertake confined space entry and confined space rescue in compliance with 29 CFR 1926 Subpart AA.

3. Locate and mark the pipe joints that are to be repaired with seals.

4. Prepare existing pipe surfaces for the installation of seals.

5. Install the seals.

6. Perform quality control inspections and testing, including pressure testing, on the seals to confirm they are correctly and securely installed and are watertight.

7. Remove and replace or reinstall all seals that fail inspection and pressure testing.

8. Provide records of installation, inspection and pressure testing for each seal installed.

9. Clean work areas inside the conduits after the seals have been successfully installed and Quality Control inspections and testing have been completed.

1.02 REFERENCE STANDARDS:

Comply with the current version of the following standards, as specified and amended herein. Where a discrepancy exists between the referenced standards and this specification, the more stringent requirement will apply.

A. ASTM International (ASTM):

1. A240: Standard Specification for Chromium and Chromium-Nickel Stainless Steel Plate, Sheet, and Strip for Pressure Vessels and for General Applications.

2. D 395: Standard Test Methods for Rubber Property - Compression Set.

3. D412: Standard Test Methods for Vulcanized Rubber and Thermoplastic Elastomers – Tension.

4. D2240: Standard Test Methods for Rubber-Evaluation of EPDM

B. American Water Works Association (AWWA):

1. AWWA C621, Internal Pipe Joint Seal Assemblies for Water Service.

C. U.S. Department of Labor, Occupational Safety and Health Administration (OSHA):

1. 29 CFR 1910.1200 – Hazard Communication.

2. 29 CFR 1926 Subpart AA – Confined Spaces in Construction.

1.03 DEFINITIONS

A. Conduit: the continuous 42-inch Raw Water Bypass Conveyance Pipeline noted on the Construction Drawings that starts at a bifurcation upstream of the surge tank and discharges into the Sedimentation Basin at West Parish Filters. The line is comprised of numerous Conduit Sections between Manway Access Sections and 619 individual Pipe Segments overall.

B. Conduit Access Structure: a structure noted on the Construction Drawings as a Manway Access Structure which facilitates access to the interior of the conduits. Access structures are spaced at various locations along the conduit; all with different levels of accessibility. The location of Manway Access structures are detailed on the Drawings.

C. Conduit Section: portion of a conduit that is located between two adjacent access structures.

D. Pipe Segment: Individual pipe within a Conduit Section. Standard 42-inch PCCP pipe segments are 16 feet in length. Other smaller, non-standard lengths occur.

1.04 SUBMITTALS:

A. Submit the following prior to Award upon request of the Engineer.

1. Names of all subcontractors proposed for use for this work including necessary evidence and/or experience records to verify their qualifications in the installation of internal pipe joint seals.

B. Submit the following within 15 days after Award in accordance with Section 01300 (Submittals).

1. Qualifications of foremen and installers that will perform the Work, and demonstration of meeting the minimum requirements specified by the seal manufacturer, including a letter from the manufacturer signed by an officer of the company, stating that the Contractors / Installers have been trained in the proper techniques for preparing the pipes and installing the seals.

2. Documentation that workers performing confined space work are trained, certified, and equipped to comply with all requirements of 29 CFR 1910.146 Federal OSHA's Permit Required Confined-Space Regulations.

3. NSF 61 Certification that all materials proposed for use in the conduits are non-toxic and have no adverse effect on the quality or appearance of potable water.

4. Manufacturer's recommendations and product data sheets and installation procedures for all concrete preparation and repair materials that will be used in the Work including performance criteria, surface preparation, ambient condition requirements, application procedures, curing requirements, volatile organic compound (VOC) data, and safety requirements.

5. Material Safety Data Sheets (MSDS) for any materials brought on-site.

6. Detailed description of the equipment and methods to be used to accomplish the Work, including the sequence of operations to be coordinated with other works in progress.

7. Sample seal installation record for review and approval by the Engineer prior to commencing installation of internal pipe joint seals.

1.05 PREQUALIFICATION:

A. Furnish the names of all subcontractors proposed for use for this work including necessary evidence and/or experience records to ascertain their qualifications in the installation of internal pipe joint seals:

B. Applicator qualifications:

1. A minimum of five (5) project references for installation of internal pipe joint seals, similar to those specified in this Section, in reinforced-concrete pipelines of similar size as those on this project. Provide minimum of three (3) reference contacts including email and phone information.

2. A minimum of five years' experience installing internal pipe joint seals similar to those specified in this Section.

3. A letter from the manufacturer of the specified materials, on the manufacturer's letterhead, signed by an officer of the company, stating that the subcontractor / applicator has been trained in the proper techniques for the preparation of concrete pipe surfaces and installation of the manufacturer's products. This letter shall further state that the subcontractor / applicator is on the manufacturer's approved list of contractors.

C. Only prequalified applicators will be permitted to apply product on project. If more than one applicator is proposed, all proposed applicators shall prequalify.

1.06 QUALITY ASSURANCE:

A. Comply with the requirements specified herein and in Section 5 of AWWA C621.

B. Adhere strictly to the manufacturer's recommendations regarding temperature and humidity conditions at time of application for all work. Do not use concrete repair and surfacing materials when either the temperature of the concrete to be repaired or the ambient temperature is below 50 degrees F (10 degrees C) 24 hours before, during, or for a period of 48 hours after the completion of the repair. Temporary heat may be used to meet the specified requirements.

C. Use new concrete repair and surfacing materials and use within the shelf life limitations set forth by the manufacturer. Clearly mark the shelf life limitations of each container.

D. The Contractor is ultimately responsible for the joint seal installation work. Inspections by the Engineer or others do not limit the Contractor's responsibility. Correct any conditions not in conformance with the specifications at no additional cost to the Owner.

E. Make all parts of the work accessible for inspections by the Engineer.

F. Allow changes in the specified repair work methods only with the permission of the Engineer.

G. Provide materials from a single manufacturer for all components of a single repair. Notwithstanding, the manufacturer of the repair materials must verify that the proposed product is suitable for the intended use based on but not limited to the repair depth, location, and exposure.

1.07 DELIVERY, STORAGE AND HANDLING:

A. Comply with the requirements noted herein and as per AWWA C621.

B. Deliver all materials to the job site in new, unopened containers. Each container shall bear the manufacturer's name and label. Labels on all material containers shall contain the following information:

1. Name of product.

2. Manufacturer's batch number.

3. Manufacturer's name.

4. Generic type of material.

5. Hazardous material identification label.

6. Shelf life date.

C. Clearly mark all containers indicating any safety hazards associated with the use of or exposure to the materials.

D. Handle and store materials to prevent damage or loss of label. Protection of materials is the Contractor's responsibility.

E. Provide shelter to store materials in area or areas designated by the Engineer solely for this purpose. This area must be above ground and have controlled humidity and temperature as specified by the manufacturer(s) of the materials.

F. Confine mixing of concrete repair and surfacing materials, clean-up, and associated operations to designated areas on the site which are near the repair locations.

G. Mix all specified materials in the sheltered mixing operation and protect materials from direct sunlight and inclement weather.

H. Do not dispose of waste materials on-site.

I. Store waste in a location approved by the Engineer temporarily in closed, nonflammable containers until final disposal. Keep no rubbish in Contractor's area longer than 24 hours.

1.08 PROJECT/SITE CONDITIONS:

A. Conduit Description:

1. The 42-inch RWC pipe was predominately manufactured by Lock Joint Pipe Co. in 1958 and constructed in the late 1950s. It consists of approximately 9,300 feet of embedded cylinder and lined cylinder prestressed concrete cylinder pipe (PCCP). Compiled laying schedules and the available original design drawings are appended to the Construction Drawings and these specifications.

2. The original PCCP Pipe Specification from 1958 is provided as Appendix C of these Specifications.

B. Conduit Preparations:

1. The RWC pipeline (Conduit) is currently out of service and has been decommissioned and dewatered for over two years. Pockets of standing water may be present at some low spots along the pipeline.

2. Provide all equipment and procedures to dewater the conduits, as necessary, to enable manned entry into them.

3. Provide all equipment and procedures to lock-out the isolation valve(s) on the conduits.

C. Access to Conduits:

1. Owner will turn control of the Work Area to the Contractor for the duration of the Work.The Contractor will provide all equipment and procedures to safely access the work areas including but not limited to ladders, ventilators, atmospheric monitors, and confined space entry equipment. (Refer to Section 01120)

2. Maintain permits and worker ingress/egress logs for the confined space entry work.

D. Water Supply for Work

1. Contractor will source, provide, and pay for all water used for the work – both potable and non-potable.

PART 2 - PRODUCTS

2.01 GENERAL:

A. Materials used for the Work will be certified to NSF 61 and will have no adverse effect on the quality or appearance of potable water.

B. Materials classified as “Controlled Products” under “Workplace Hazardous Materials Information System” are prohibited inside the conduits unless the material will be directly employed in the work.

2.02 MANUFACTURERS:

A. Internal Pipe Joint Seals shall confirm to the requirements of AWWA C621 and be:

1. WEKO Seal as manufactured by Miller Pipeline Corporation with all Type 316 Steel for steel components.

2. HydraTite Seal as manufactured by HydraTech Engineered Products LLC with all Type 316 Steel for steel components.

3. Approved equal

2.03 MATERIALS:

A. Site Specific Design Conditions

Internal seals shall be suitable to operate without leaking or failing structurally with:

- Internal working pressure, Pw = 150 psi
- Internal transient pressure (in excess of Pw), Pt = 60 psi
- Internal vacuum pressure, Pv = -14.7 psi (full vacuum)
- Internal static pressure, Ps = 200 psi
- Soil cover height, H = 4.5 ft minimum per drawings,
- Height of groundwater, Hw = at ground surface
- Live load = HS-20 design truck

B. Materials and Workmanship

Materials and workmanship shall comply with Section 4.2 of AWWA C621.

PART 3 - EXECUTION

3.01 GENERAL REQUIREMENTS:

A. Perform work within the conduit at temperature and humidity conditions suitable for the installation and proper curing of materials in accordance with the manufacturer's recommendations. Where applicable, provide ventilation, heat, and dehumidification to achieve the required conditions.

B. Coordinate pipe joint seal installation work with other work being performed.

3.02 INSTALLATION OF INTERNAL JOINT SEALS

A. Installation

Installation of Internal Joint Seals shall conform to the requirements of Section 4.5 of AWWA C621 and the supplementary requirements noted herein.

B. Delineation and Preparation of Joint/Crack Repair Areas:

1. Identify and mark on the pipe segments, using grease chalk or other marking method that is durable and acceptable to the Engineer, the pipe joint locations where internal pipe joint seals will be installed. Perform an inspection with the Engineer to confirm that the seal installation sites have been correctly located.

2. Prepare the surfaces of the pipes on either side of the joint where the seals will make contact, to a minimum of 2 inches beyond the edge of the proposed seal position, to a finish that will allow the seals to interface consistently and provide a permanent seal.

3. As a minimum, preparation of joint areas will include the following:

   a. Remove surface deposits and scaling, broken, loose, honeycombed, and disintegrating materials down to solid concrete using pressure washing (2500 psi minimum), abrasive blasting, chipping, scarifying, and / or other suitable techniques. The finished pipe surface profile will meet the manufacturer's requirements of concrete repair and resurfacing materials used to re-establish a circular pipe cross-section.

   b. Remove all high / low surface imperfections running axially through or part-way through the sealing surface by scraping, grinding or other method approved by the Engineer, to produce a circular pipe cross-section. Deep imperfections that grinding will not remove must be filled with approved quick setting cement mortar. This material must be rendered smooth and ground if necessary to suit the prepared surface of the joint area.

   c. Fill gaps in pipe joints with quick-setting cement mortar, which is mixed in the conduit as needed, to the full depth of the gap and rendered flush with the internal surface of the pipe.

   d. Apply a coat of approved epoxy gel / resin to the preparation area where the seal will be placed. This epoxy will control pipe porosity and irregularities and provide for an effective bubble test on the completed seal.

C. Seal Installation:

1. Immediately prior to fitting the seal, clean the area with a dry brush and then coat with a non-toxic joint lubricant that is compatible with the elastomeric seal, taking care not to incorporate dust or sediment from unprepared pipe surfaces.

2. Install seal in accordance with the manufacturer's written instructions and Clauses 4.5.7 through 4.5.9 of AWWA C621 including the full one-hour relaxation period between expansions as noted in Clause 4.5.9.5.

D. Seal Testing:

1. Each seal will be pressure tested as per Test 1 and Test 2 test methods after installation has been completed as noted in Clause 5.2.1 of AWWA C621 but no sooner than 30 minutes after final fitting of the seal.

2. With a "test band" in place on the elastomeric seal, pressurize the seal through the test valve to the required test pressure, and maintain at that pressure with a regulated air supply while a soap and water solution is applied to the outer edges of the seal and around the test port to detect any leaks.

3. After testing is completed, seal the test plug on the test valve by applying non-toxic thread sealing compound to the threads, and insert the plug into the valve in accordance with the manufacturer's written instructions.

E. Installation and Test Records:

1. Provide a record for each seal installation. As a minimum, each record will include the following:

a. Owner's pipe joint identification number.

b. Date and time seal installation was completed.

c. Restraining band jacking pressures.

d. Date and time of pressure test.

e. Test pressure, duration of test and overall result of pressure test (PASS or FAIL). If a seal fails pressure testing, then additional record(s) will be provided for the repair works.

f. Locations of observed leakage, if any (example: Through Joint, upstream side, downstream side, clock position with reference facing downstream).

g. Construction Photographs as required in Section 01380.

h. Other repair documentation as required in Section 02618.

END OF SECTION

SECTION 02612

PIPE JOINT PRESSURE TESTING

PART 1 - GENERAL

1.01 SUMMARY

A. This Section includes the minimum requirements for pressure testing of circumferential pipe joints and any circumferential cracks in the 42-inch Raw Water By-Pass Conveyance Pipeline.

B. Furnish all materials, equipment, labor, supervision, requirements for safety and all other expense required for the satisfactory performance of all Work.

C. Complete the pressure testing of designated circumferential pipe joints as well as circumferential cracks in the pipe barrel in accordance with this Section and the written instructions of the test equipment manufacturer. Where a discrepancy exists between this Section and the manufacturer's written instructions, the more stringent requirement will apply.

D. In general, the Work will consist of the following major tasks:

1. Mobilization of crew and equipment to and from project site.

2. Perform confined space entry work to enable and support the pressure testing of pipe joints in the PCCP conduits, including provision of all workers and equipment needed to undertake confined space entry and confined space rescue in compliance with OSHA 29 CFR 1910.146.

3. Locate pipe joints to be pressure tested.

4. Perform pressure testing of designated circumferential pipe joints as well as circumferential cracks in the pipe barrel in the conduits.

5. Provide records of pressure testing for each pipe joint/circumferential crack tested.

1.02 REFERENCES

A. Comply with the most recent version of the following reference standards, as specified and amended herein. Where a discrepancy exists between the referenced standards and this specification, the more stringent requirement will apply.

1. ASTM International (ASTM):

a. C1103: Standard Practice for Joint Acceptance Testing of Installed Precast Concrete Pipe Sewer Lines

2. U.S. Department of Labor, Occupational Safety and Health Administration (OSHA):

a. 29 CFR 1910.146 – Permit Required Confined-Spaces.

b. 29 CFR 1910.1200 – Hazard Communication.

1.03 DEFINITIONS

A. Conduit: the continuous 42-inch Raw Water Bypass Conveyance Pipeline noted on the Construction Drawings that starts at a bifurcation upstream of the surge tank and discharges into the Sedimentation Basin at West Parish Filters. The line is comprised of numerous Conduit Sections between Manway Access Sections and 619 individual Pipe Segments overall.

B. Conduit Access Structure: a structure noted on the Construction Drawings as a Manway Access Structure which facilitates access to the interior of the conduits. Access structures are spaced at various locations along the conduit; all with different levels of accessibility. A listing of Manway Access structures is provided on the Drawings

C. Conduit Section: portion of a conduit that is located between two adjacent access structures.

D. Pipe Segment: Individual pipe within a Conduit Section. Standard 42-inch PCCP pipe segments are 16 feet in length. Other smaller, non-standard lengths occur.

1.04 SUBMITTALS

A. Submit the following afterprior to Award but prior to Mobilization upon request of the Engineer:

1. Names of all subcontractors proposed for use for this work including necessary evidence and/or experience records to verify their qualifications in the pressure testing of circumferential pipe joints in reinforced-concrete and/or PCCP pipe.

2. Contractor / subcontractor qualifications:

a. A minimum of five years' experience in pressure testing of pipe joints in reinforced-concrete or PCCP pipelines of similar diameter to those on this project.

b. A minimum of three (3) project references for pressure testing of pipe joints in reinforced-concrete pipelines of similar diameter to those on this project. Provide minimum of one (1) reference contact including email and phone information.

c. A letter from the manufacturer of the pressure testing equipment, on the manufacturer's letterhead and signed by an officer of the company, stating that the contractor / subcontractor has been trained in the proper techniques for pressure testing pipe joints with the manufacturer's equipment.

3. Detailed description of the pressure testing equipment proposed for the Work including documentation that the equipment is the product of manufacturers having more than five years' regular production of successful joint testing equipment.

B. Submit the following within 15 days after Award in accordance with Section 01300 (Submittals):

1. Qualifications of foreman and equipment operators that will perform the Work, and demonstration of meeting the minimum requirements specified by the pressure testing equipment manufacturer.

2. Documentation that workers performing confined space work are trained, certified, and equipped to comply with all requirements of 29 CFR 1910.146 Federal OSHA's Permit Required Confined-Space Regulations.

3. NSF 61 Certification that all materials proposed for use in the Work are non-toxic and will have no adverse effect on the quality or appearance of potable water.

4. Safety Data Sheets (SDS) for any materials brought on-site.

5. Method Statement that describes in detail the equipment and procedures proposed for accomplishing the work. At a minimum, the method statement will include:

a. Project Management, Site Supervisors, and equipment operators;

b. Project schedule and work sequencing;

c. Equipment setup;

d. Pressure test procedure including surface preparation;

e. Quality Control (QC) procedures and inspections;

f. Project Records.

1.05 QUALITY ASSURANCE:

A. Provide a Supervisor on site, at all times work is underway, to represent the Contractor and to have authority to receive and execute instructions given by the Engineer.

B. Establish and maintain an effective quality control system including quality control procedures and testing to ensure compliance with the requirements of this Section.

C. Provide technical field support or training services to operators in the use of the testing equipment, as and if required, at no additional cost to the Owner.

1.06 DELIVERY, STORAGE AND HANDLING:

A. Deliver all materials to the job site in new, unopened containers that bear labels conforming with the OSHA Hazard Communication Standard, 29 CFR 1910.1200.

B. Do not dispose of waste materials on-site. Temporarily store waste in a location approved by the Engineer in closed, nonflammable containers until final disposal. Remove all rubbish from work areas daily.

1.07 PROJECT/SITE CONDITIONS:

A. Conduit Description:

1. The 42-inch RWC pipe was predominately manufactured by Lock Joint Pipe Co. in 1958 and constructed in the late 1950s. It consists of approximately 9,300 feet of embedded cylinder and lined cylinder prestressed concrete cylinder pipe (PCCP). Compiled laying schedules and the available original design drawings are appended to the Construction Drawings and these specifications.

2. The original PCCP Pipe Specification from 1958 is provided as Appendix C of these Specifications.

B. Conduit Preparations:

1. The RWC pipeline (Conduit) is currently out of service and has been decommissioned and dewatered for over two years. Pockets of standing water may be present at some low spots along the pipeline.

2. Provide all equipment and procedures to dewater the conduits, as necessary, to enable manned entry into them.

3. Provide all equipment and procedures to lock-out the isolation valve(s) on the conduits.

C. Access to Conduits:

1. The Owner will turn control of the Work Area to the Contractor for the duration of the Work.The Contractor will provide all equipment and procedures to safely access the work areas including but not limited to ladders, ventilators, atmospheric monitors,

and confined space entry equipment. Refer to Section 01120 for confined space entry requirements.

3. Maintain permits and worker ingress/egress logs for the confined space entry work.

PART 2 - PRODUCTS

2.01 GENERAL

A. Materials used for the Work will be certified to NSF 61 and will have no adverse effect on the quality or appearance of potable water.PRESSURE TESTING EQUIPMENT:

B. Cherne Air-Loc Joint Tester from Oatey Company.

C. Approved equal.

2.03 WATER:

A. Water used for pipe joint pressure testing preparations (e.g. for pre-wetting pipe surfaces prior to pressure testing) will be clear, potable, and free of deleterious substances.

2.04 LEAK TESTING PRODUCTS:

A. Leak Testing Soap

1. Food grade, non-toxic.

PART 3 - EXECUTION

3.01 GENERAL REQUIREMENTS:

A. Perform work within the conduit at temperature and humidity conditions suitable for pipe joint pressure testing in accordance with the equipment manufacturer's recommendations.

B. Coordinate pipe joint pressure testing with other work being performed.

C. Carry out testing at all joints noted on the Construction Drawings for joint repair (e.g., missing mortar, circumferentially cracked, etc.) and on any pipe barrels with circumferential cracks and designated for repair.

3.02 PRESSURE TESTING OF CIRCUMFERENTIAL PIPE JOINTS

A. Pre-test Inspection and Preparation:

1. Visually inspect the conduit for defects and debris that may damage the testing equipment as it is being moved through the conduit.

2. Prior to moving the test equipment into position over a joint (or crack), inspect the joint/crack and adjacent pipe surfaces for defects and debris that may damage the sealing elements or prevent them from seating tightly against the pipe surfaces. Clean loose debris and rough edges from the test area using scrapers, brushes, or other approved method. Collect and remove all such material from the conduit.

B. Pressure Testing:

1. Moisten pipe surfaces with water in the tester element seating areas, prior to moving the test equipment over the joint, to aid in sealing the concrete from leaking. If doing this fails to prevent air leaking through the concrete, pretreat the joint or install a closed-cell ethyl foam sill plate gasket between the sealing elements and the pipe surface, full circumference.

2. Determine the hydrostatic integrity of each circumferential pipe joint by pressure testing the joint with water in accordance with the equipment manufacturer's published procedure and ASTM C1103.

3. Notwithstanding the above, circumferential pipe joints will undergo testing at a pressure of 50 psig for a duration of 20 seconds.

4. A joint will be considered to have failed testing if the pressure on the joint falls below 45 psig and inspection of equipment and nearby pipe surfaces fails to reveal that the air is leaking through the equipment or porous concrete to the interior of the conduit.

5. In all cases where test pressure decreases below 50 psig, spray a soap solution around the pipe circumference on both sides of the test apparatus, at the tester sealing element / pipe interface, to determine if the air/water is bypassing the sealing elements or leaks through the pipe joint. If necessary, apply the soap solution to the tester section seals and air system connections, and to nearby pipe surfaces, to detect leakage from those areas.

C. Inspection Records:

1. Provide a Pressure Testing Record for each circumferential pipe joint tested, in paper and electronic format using Excel. Sample record template is attached to these specifications, and an Excel file will be provided for the Contractor's use. As a minimum, each record will include the following information:

a. Owner's pipe joint identification number.

b. Date and time of testing.

c. Ambient temperature in conduit at time of pressure testing.

d. Initial and final test pressures, duration of test and overall result of pressure test (PASS or FAIL).

e. Pertinent comments or observations of testing, such as the locations at which air was observed leaking during a test.

2. Report all tests if multiple tests are performed on a joint.

END OF SECTION

SECTION 02613

CONCRETE AND JOINT MORTAR REPAIR

PART 1 - GENERAL

1.01 DESCRIPTION:

A. This Section includes the minimum requirements for materials, storage, handling, installation, quality control, and inspection of concrete and joint mortar repairs in the 42-inch Raw Water Conveyance Bypass Pipeline.

B. The locations of concrete and joint mortar repairs are designated on the Drawings. Additional location may be designated for repair during construction by the Engineer.

C. Furnish all materials, equipment, labor, supervision, requirements for safety, and all other expense required for the satisfactory performance of all Work.

D. Complete concrete and joint mortar repairs in accordance with this Section and the product manufacturer's instructions regarding surface preparation, application, curing, inspection, and requirements for safety. Where a discrepancy exists between this Section and the written instructions of the product manufacturer, the most stringent requirement will apply.

E. In general, the Work will consist of the following major tasks:

1. Mobilize crew and equipment to and from project site.

2. Perform confined space entry work to enable and support the repair and inspection of concrete and joint mortar repairs to the conduits, including provision of all workers and equipment needed to undertake confined space entry and confined space rescue in compliance with OSHA 29 CFR 1910.146.

3. Locate and mark the pipes that are to be repaired.

4. Clean and prepare existing concrete and reinforcing steel surfaces to accept the repair materials.

5. Install the concrete and joint mortar repairs in the conduits.

6. Perform inspection and QC testing to evaluate quality and completeness of work.

7. Perform a final cleaning of work areas after repairs and inspections have been completed.

8. Provide records of all repairs completed in the conduits, including Quality Control tests of materials used to affect the repairs.

9. Clean work areas inside the conduits after the concrete and joint mortar repairs have been successfully installed and Quality Control inspections and testing have been completed.

1.02 REFERENCE STANDARDS:

Comply with the current version of the following standards, as specified and amended herein. Where a discrepancy exists between the referenced standards and this specification, the more stringent requirement will apply.

A. ASTM International (ASTM):

1. C33: Standard Specification for Concrete Aggregates

2. C109: Standard Test Method for Compressive Strength of Hydraulic Cement Mortars (Using 2-in. or [50-mm] Cube Specimens

3. C150: Standard Specification for Portland Cement

4. C1583: Standard Test Method for Tensile Strength of Concrete Surfaces and the Bond Strength or Tensile Strength of Concrete Repair and Overlay Materials by Direct Tension (Pull-off Method)

B. International Concrete Repair Institute (ICRI)

1. ICRI 210.3R Guide for Using In-Situ Tensile Pulloff Tests to Evaluate Bond of Concrete Surface Materials

2. ICRI 310.1R Guide for Surface Preparation for the Repair of Deteriorated Concrete Resulting from Reinforcing Steel Corrosion

3. ICRI 310.2R Selecting and Specifying Concrete Surface Preparation for Sealers, Coatings, Polymer Overlays, and Concrete Repair

4. ICRI 310.3R Guide for the Preparation of Concrete Surfaces for Repair Using Hydrodemolition Methods

C. NACE International / SSPC: The Society for Protective Coatings (NACE / SSPC):

1. NACE No. 2 / SSPC-SP 10: Near-White Metal Blast Cleaning

2. NACE WJ-2 / SSPC-SP WJ-2: Water Jet Cleaning of Metals – Very Thorough Cleaning

3. NACE WJ-4 / SSPC-SP WJ-4: Water Jet Cleaning of Metals – Light Cleaning

D. U.S. Department of Labor, Occupational Safety and Health Administration (OSHA)

1. 29 CFR 1910.1200 – Hazard Communication.

2. 29 CFR 1926 Subpart AA – Confined Spaces in Construction.

1.03 DEFINITIONS

A. Conduit: the continuous 42-inch Raw Water Bypass Conveyance Pipeline noted on the Construction Drawings that starts at a bifurcation upstream of the surge tank and discharges into the Sedimentation Basin at West Parish Filters. The line is comprised of numerous Conduit Sections between Manway Access Sections and 619 individual Pipe Segments overall.

B. Conduit Access Structure: a structure noted on the Construction Drawings as a Manway Access Structure which facilitates access to the interior of the conduits. Access structures are spaced at various locations along the conduit; all with different levels of accessibility. A listing of Manway Access structures is provided on the Drawings.

C. Conduit Section: portion of a conduit that is located between two adjacent access structures.

D. Pipe Segment: Individual pipe within a Conduit Section. Standard 42-inch PCCP pipe segments are 16 feet in length. Other smaller, non-standard lengths occur.

E. Spall Repairs: Partial-depth volume of pipe wall loss or honeycombed concrete including local repair areas and full length repair areas along the pipe segment in the crown and/or invert regions.

F. Joint Repairs: Missing, damaged, cracked and/or loose joint mortar between two pipe segments.

G. Crack Repairs: Cracks on the inner concrete core surface wider than 0.06 in. (1.5 mm) and longer than 12 inches.

1.04 SUBMITTALS:

A. Submit the following prior to Award upon request by the Engineer.

1. Names of all Contractors / Subcontractors proposed for use for this work including necessary evidence and / or experience records to ascertain their qualifications in the application of cement-based and polymer-modified concrete repair products.

B. Submit the following within 15 days after Award in accordance with Section 01300 (Submittals).

1. Manufacturer’s product recommendations, and product data sheets and installation procedures for all repair materials including physical and chemical characteristics, performance criteria, surface preparation, ambient condition requirements and applications, curing requirements, volatile organic compound (VOC) data, and safety requirements.

2. NSF 61 Certification that all materials proposed for use in the Work are non-toxic and will have no adverse effect on the cleanliness of the conduit and the quality of the raw water conveyed by it.

3. Method Statements that describe in detail the procedures proposed for accomplishing the work. At a minimum, each method statement will include:

    a. Project Management, Site Supervisors, and approved personnel;

    b. Project schedule and work sequencing;

    c. Project setup, material storage and mixing / batching arrangements;

    d. Concrete surface preparation procedures including collection, removal from the conduit, and disposal of all wash water, blast media and removed materials;

    e. Material mixing / batching including transport of mixed repair materials to application sites;

    f. Application procedures including finishing;

    g. Curing procedures;

    h. Final conduit cleaning including collection, removal from the conduit, and disposal of all work debris;

    i. Quality Control (QC) procedures and testing;

    j. Provision of project records.

4. Qualifications of foremen and applicators that will perform the Work, and demonstration of meeting the minimum requirements specified by the manufacturer, including a letter from the manufacturer signed by an officer of the company, stating that the workers have been trained in the proper techniques for preparing the pipes and applying the repair materials.

5. Documentation that workers performing confined space work are trained, certified, and equipped to comply with all requirements of OSHA 29 CFR 1926 Subpart AA.

6. NSF 61 Certification that all materials used in the Work are non-toxic and will have no adverse effect on the cleanliness of the conduit and the quality of the raw water conveyed by it.

7. Safety Data Sheets (SDS) for any materials brought on-site including all repair system materials, solvents, and abrasive blast media.

8. Sample project records including repair details and quality control inspection and test results on a pipe-by-pipe basis (pipe number, repair dimensions and location on pipe surface, repair date, product lot numbers, etc.).

1.05 PREQUALIFICATION:

A. Furnish the names of all subcontractors proposed for use for this work including necessary evidence and/or experience records to ascertain their qualifications in the installation of internal pipe joint seals:

B. Applicator qualifications:

1. A minimum of three (3) project references for the application of cement-based and polymer-modified repair products, similar to those specified in this Section, to repair interior and exterior surfaces of buried reinforced-concrete pipes on projects of similar or greater volume to this project. Provide minimum of one reference contact including email and phone information.

2. A minimum of five (5) years' experience in applying polymer-modified and cement-based repair compounds similar to those specified in this Section.

3. A letter from the manufacturer of the specified or proposed repair materials, on the manufacturer's letterhead, signed by an officer of the company, stating that the Contractor / Subcontractor has been trained in the proper techniques for the preparation of concrete surfaces and the methods for mixing, placing, and curing of the manufacturer's products. This letter will further state that the Contractor / Subcontractor is on the manufacturer's approved list of contractors.

C. Only prequalified applicators will be permitted to apply product on project. If more than one applicator is proposed, all proposed applicators shall prequalify.

1.06 QUALITY ASSURANCE:

A. The Contractor is responsible for the quality of material and workmanship provided for the concrete repair work. Inspections by the Engineer or others do not limit the Contractor's responsibility.

B. Provide a Supervisor on site, at all times while work is underway, to represent the Contractor and to have authority to receive and execute instructions given by the Engineer.

C. Establish and maintain an effective quality assurance system including quality control procedures and testing to ensure compliance with the requirements of this Section.

D. Make all parts of the work accessible for inspections by the Engineer. Correct any conditions not in conformance with the specifications at no additional cost to the Owner.

E. Permit changes in the specified repair work methods only with the permission of the manufacturer and the Engineer.

F. Provide materials from a single manufacturer for all components of a single repair. Notwithstanding, the manufacturer of the repair materials must verify that the proposed

product is suitable for the intended use based on but not limited to the repair depth, location, and exposure.

G. Use only new repair materials, within the shelf life limitations set forth by the manufacturer.

H. Provide technical field support or training services, as and if required by the accepted material manufacturers, at no additional cost to the Owner.

1.07 SERVICES OF MANUFACTURERS REPRESENTATIVES:

A. The manufacturer of the repair materials must verify that the proposed product is suitable for the intended use based on but not limited to the repair depth, location, and exposure.

B. Provide the services of a qualified manufacturer's technical representative to instruct the Contractor's / Subcontractor's personnel in the mixing, proper use and application of the polymer-modified and cement-based repair materials.

C. Provide written certification from the manufacturers' representative that materials have been mixed and applied properly and surfaces to receive these products have been prepared properly, all in conformance with manufacturer's requirements.

D. Provide on-site time for the manufacturer's representative, as required and at no additional cost to the Owner, to achieve a successful installation.

1.08 DELIVERY, STORAGE AND HANDLING:

A. Deliver all materials to the job site in new, unopened containers. Each container will bear labels containing the following information:

1. Manufacturer's name.

2. Product name.

3. Generic type of material.

4. Manufacturer's batch number.

5. Shelf life date.

6. Hazardous material identification label that conforms with the OSHA Hazard Communication Standard, 29 CFR 1910.1200.

B. Handle and store materials to prevent damage or loss of labels.

C. Provide shelter to store materials in area or areas designated by the Engineer solely for this purpose. Material storage areas must be above ground and have controlled humidity and temperature as specified by the manufacturer(s) of the materials.

D. Confine product mixing, clean-up, and associated operations to sheltered areas on the site, designated by the Contractor, which are near the repair locations. Protect materials from direct sunlight and inclement weather.

E. Do not dispose of waste materials on-site. Temporarily store waste in closed nonflammable containers, at an approved location, until final disposal. Store waste in Contractor's area no longer than 24 hours.

1.09 PROJECT/SITE CONDITIONS:

A. Conduit Description:

1. The 42-inch RWC pipe was predominately manufactured by Lock Joint Pipe Co. in 1958 and constructed in the late 1950s. It consists of approximately 9,300 feet of embedded cylinder and lined cylinder prestressed concrete cylinder pipe (PCCP). Compiled laying schedules and the available original design drawings are appended to the Construction Drawings and these specifications.

2. The original PCCP Pipe Specification from 1958 is provided as Appendix C of these Specifications.

B. Site Specific Design Conditions:

Internal concrete pipe and joint repairs shall be suitable to operate without failing structurally with:

- Internal working pressure, Pw = 150 psi
- Internal transient pressure (in excess of Pw), Pt = 60 psi
- Internal vacuum pressure, Pv = -14.7 psi (full vacuum)
- Internal static pressure, Ps = 200 psi
- Soil cover height, H = 4.5 ft minimum per drawings,
- Height of groundwater, Hw = at ground surface
- Live load = HS-20 design truck

C. Conduit Preparations:

1. The RWC pipeline (Conduit) is currently out of service and has been decommissioned and dewatered for over two years. Pockets of standing water may be present at some low spots along the pipeline.

2. Provide all equipment and procedures to dewater the conduits, as necessary, to enable manned entry into them.

3. Provide all equipment and procedures to lock-out the isolation valve(s) on the conduits.

D. Access to Conduits:

1. Owner will turn control of the Work Area to the Contractor for the duration of the Work.

2. The Contractor will provide all equipment and procedures to safely access the work areas including but not limited to ladders, ventilators, atmospheric monitors, and confined space entry equipment. (Refer to Section 01120)

3. Maintain permits and worker ingress/egress logs for the confined space entry work.

E. Water Supply for Work

1. Contractor will source, provide, and pay for all water used for the work – both potable and non-potable.

PART 2 - PRODUCTS

2.01 GENERAL

A. Materials used for the Work will be certified to NSF 61 and will have no adverse effect on the cleanliness of the conduit and the quality of the raw water conveyed by it.

B. Materials classified as "Controlled Products" under "Workplace Hazardous Materials Information System" are prohibited inside the conduits unless the material will be directly employed in the work.

2.02 WATER:

A. The water used in all work will be potable quality, clean and free of organic matter, alkali, salts, and other impurities that might reduce the strength, durability, or other quality of the concrete and joint mortar repairs.

2.03 AGGREGATE:

A. All aggregates shall conform to ASTM C33 and to the requirements of the manufacturer of the repair materials, where applicable.

B. The sand for epoxy mortar shall be clean, dry, well-graded sand composed of sound particles passing a 1.18-mm (No. 16) sieve.

2.04 EPOXY BONDING AGENT:

A. An epoxy bonding agent (bond coat) shall be applied to all repair areas larger than 2-inches in diameter and less than 1½ inches deep before applying the epoxy mortar. The same epoxy resin shall be used for both the bond coat and the epoxy mortar.

B. Products:

1. Sika Chemical Corp.; Sika Armatec-110 EpoCem

2. Euclid Chemical Company; Duralprep A.C.

3. Approved equal

2.05 EPOXY MORTAR FOR PIPE JOINT & CONCRETE CORE REPAIRS:

A. Epoxy shall be 100% solids, and no unreactive diluents, wetting agents, or volatile solvents shall be incorporated.

B. For localized repairs and surface defects less than 2 inches in diameter, the epoxy mortar resin shall meet the requirements of ASTM C 881, Type II, grade 3. Repairs do not require an epoxy resin bond coat.

C. For concrete core (spall) repair areas larger than 2 in. in diameter and less than 1 ½ inches deep, the epoxy mortar resin shall meet the requirements of ASTM C 881 for a Type I, grade 2, class B or C or a Type III, grade 2, class B or C epoxy system. Repairs require the application of an epoxy resin bond-coat before applying the epoxy mortar. The same epoxy resin shall be used for both the bond coat and the epoxy mortar.

D. Products:

1. For horizontal surfaces:

a. Sika Chemical Corp.; Sikadur 22 Lo-Mod (repairs > 2 in. diameter)

b. Approved equal.

2. For vertical and overhead surfaces (all repair sizes):

a. Sika Chemical Corp.; Sikadur 23 Lo-Mod Gel,

b. Approved equal.

2.06 CHEMICAL GROUT FOR PIPE JOINT REPAIRS:

A. Chemical grout for pipe joint mortar repairs shall be fast curing.

B. Products:

1. Sika Chemical Corp.; Sikafix HH Hydrophilic polyurethane chemical grout;

2. Approved equal.

2.07 EPOXY ADHESIVE FOR CONCRETE CRACK REPAIRS:

A. Epoxy adhesive for concrete crack repair to be two-component, 100 % solids, 100% reactive adhesive system with no diluents, wetting agents or volatile solvents.

B. The specific material to be used for crack widths wider than 1/16" must be selected by the manufacturer with backup data submitted in the form of a shop drawing transmittal defining the crack width limitation and temperature restraints for each type of epoxy. The epoxy must meet or exceed the following property requirements:

1. Tensile Strength:

a. Method: ASTM D638

b. Requirement: 5,000 psi

2. Tensile Elongation at Break

a. Method: ASTM D638

b. Requirement: 4% maximum

3. Flexural Strength:

a. Method: ASTM D790

b. Requirement: 10,000 psi

4. Compressive Strength:

a. Method: ASTM D695

b. Requirement: 10,000 psi

5. Bond Strength:

a. Method: ASTM C321

b. Requirement: 500 psi in 6 hours @ 70 degree F

C. Products:

1. Sika Chemical Corp.; Sikadur 52,

2. Approved equal.

2.08 PIPE JOINT AND CONCRETE CORE REPAIRS:

A. Pipe joint and concrete core repairs shall be repaired using either: 1) non-shrink cementitious mortar, 2) polymer-modified cementitious mortar (without or with formwork), or 3) epoxy mortar.

B. Using Non-Shrink Cementitious Mortar

1. Pipe joint and concrete core (spall) repairs not requiring formwork and to a maximum depth of 4 inches using non-shrink cementitious mortar having a minimum 28-day compressive strength of 7,000 psi:

2. Products:

a. Master Builder, Inc.; MasterEmaco S488 CI, reinforced as recommended when thickness than 2”

b. Approved equal

C. Using Polymer-Modified Cementitious Mortar (No Formwork):

1. Pipe joint and concrete core (spall) repairs not requiring formwork and to a maximum depth of 4 inches using a two-component, polymer-modified cementitious mortar having a minimum 28-day compressive strength of 7,000 psi:

2. Products:

a. Sika Chemical Corp.; Sikatop 123 Plus

b. Euclid Chemical Company; Duraltop Gel

c. Approved equal

D. Using Polymer-Modified Cementitious Mortar (Formwork Required):

1. Pipe joint and concrete core (spall) repairs requiring formwork using a two-component, polymer-modified cementitious mortar / aggregate mixture that achieves a minimum 28-day compressive strength of 6,000 psi.

a. Products:

(1) Sika Chemical Corp.; Sikatop 111 Plus

(2) Euclid Chemical Company; Duraltop Flowable Mortar

(3) Approved equal

E. Using Epoxy Mortar

1. Pipe joint and concrete core (spall) repairs using epoxy mortar shall be as specified in Section 2.05.

2. Localized repairs and surface defects less than 2 inches in diameter shall be repaired using epoxy mortar without a bond coat.

3. Repair areas larger than 2 in. in diameter and less than 1½ inches deep shall be repaired using an epoxy resin bond-coat before applying the epoxy mortar. The same epoxy resin shall be used for both the bond coat and the epoxy mortar.

PART 3 - EXECUTION

3.01 GENERAL REQUIREMENTS:

A. Perform work within the conduit at temperature and humidity conditions suitable for the installation and proper curing of materials in accordance with the manufacturer's recommendations. Where applicable, provide ventilation, heat, and dehumidification to achieve the required conditions.

B. Coordinate concrete repair work with other work being performed.

C. Where required, install temporary dikes in the conduit to aid the collection and removal of cleaning water and debris from the conduit and prevent it from passing into adjacent conduit sections.

D. Wash water and debris will be removed from the conduit using methods that have been approved by the Engineer and disposed of at an appropriate waste disposal location. Use of vacuum trucks for conduit cleaning is prohibited unless an exception is approved. Approval of exceptions will be limited uses where the Contractor certifies that the truck has been thoroughly cleaned and can demonstrate that the use of the vacuum truck will fully meet disposal compliance requirements prior to mobilizing to any conduit site.

E. Delineation and Preparation of Concrete and Joint Repair Areas:

1. Identify and mark on the pipe segments, using grease chalk or other marking method that is durable and acceptable to the Engineer, the pipe locations where concrete repairs and joint mortar repairs will be performed. Perform an inspection with the Engineer to confirm that the installation sites have been correctly located.

2. Measure and record locations of all concrete and joint mortar repairs and submit as Project Records in tabular or drawing format.

3.02 CONCRETE SURFACE PREPARATION:

A. Remove dirt, biofilm, and other deleterious material from the conduit surface at each repair area, to a minimum of 1 foot beyond the perimeter of the repair area, using low-pressure water cleaning as described in NACE WJ-4 / SSPC SP WJ-4.

B. Prepare concrete surfaces for repair to a minimum Concrete Surface Profile (CSP) of CSP 6, as defined in ICRI 310.2, using abrasive blasting or hydrodemolition techniques described in ICRI 310.3. Extents of material removed shall be sufficient to promote bonding of the repair materials as specified. Contractor shall perform tensile pull-off tests as specified in Section 3.09B to verify that deteriorated and softened concrete has been removed. If not, additional concrete removal will be required at no extra cost to the Owner.

C. When reinforcing steel is encountered, expose and undercut the steel following guidelines provided in ICRI 310.1. If the concrete around the steel is not deteriorated and if the steel-to-concrete bond is intact, undercutting should not be required. Where the steel is exposed and undercut using hand tools or chipping hammers, abrasive blast, or waterjet those areas to remove bruised / microcracked concrete.

D. Set up a circular saw with a masonry blade and set the depth of cut to a minimum depth of 1/8 inch below the surface of the concrete, or as recommended by the manufacturer, but no closer than 1/4 inches from the steel cylinder. Saw cut the perimeter of the repair area, preferably with a dovetail cut, to square-off the repair edges and prevent feathering of the repair material. Take extreme care to prevent cutting or damaging the steel cylinder.

E. Do not cut steel reinforcing members unless otherwise instructed to do so by the Engineer.

3.03 STEEL SPIGOT AND BELL JOINT RING PREPARATION

A. Prepare and clean around and inside the joint area including the steel joint rings using small hand tools, as necessary.

B. Remove all loose, damaged, deteriorated, or unbonded joint mortar and adjacent concrete.

C. Remove all loose scale, rust, corrosion by-products from the exposed steel bell and spigot joint rings.

D. Remove and dispose of debris associated with cleaning of pipe joint.

E. Prepare exposed steel bell and spigot joint surfaces to near-white metal finish by abrasive blasting in accordance with NACE No. 2 / SSPC-SP 10, or very thorough cleaning by waterjet cleaning to NACE WJ-2 / SSPC SP WJ-2.

F. If necessary, apply polymer-cement slurry or other approved coating to the joint ring steel after it has been cleaned to protect it from corroding prior to making the pipe joint repair.

G. Notify the Engineer of all locations where exposed joint ring steel has lost cross-sectional area so the Engineer can determine if additional repairs are to be carried out.

3.04 CONDUIT JOINT REPAIRS:

A. Apply approved epoxy bonding agent to prepared concrete and exposed steel surfaces according to the manufacturer's recommendations.

B. Install full-depth conduit joint repair to the original conduit surface. Ensure the repair void is completely filled to eliminate voids or honeycombed areas.

C. After curing and removal of formwork, if used, fill any voids or honeycomb areas in the repair patch surfaces with the same repair material. Make final finished surface of patches even with the existing concrete surface. Do not feather repair mortar to meet existing concrete surface.

3.05 CONCRETE CORE REPAIRS:

A. Apply approved epoxy bonding agent to prepared concrete and exposed joint ring steel surfaces according to the manufacturer's recommendations.

B. Repair local and full-length repair areas to the original conduit surface with approved repair material according to the manufacturer's recommendations. If necessary, apply the repair material in lifts as recommended by the manufacturer. Ensure the repair void is completely filled to eliminate voids.

C. After curing and removal of formwork, if used, fill any voids in the repair patch surfaces with the same approved repair material. Make final finished surface of patches even with the existing concrete surface. Do not feather repair mortar to meet existing concrete surface.

3.06 CONCRETE CRACK REPAIRS

A. Pressure inject all indicated cracks with a continuous in-line meter and mix device, capable if injection pressure up to a maximum of 300 psi to develop at least a 90% penetration of all cracks without the inclusion of air pockets in the epoxy, and to achieve the specified bond-strength of the cracked sections. Achieve 100% penetration.

B. Entry Ports: Space entry ports at a distance along the crack not greater than the pipe wall thickness. Space ports so that the injected material travels between ports and the cracks are filled to specified requirements.

C. Contractor shall supply equipment and materials and adjust the application procedure to achieve at least a 90% filing of all cracks without drainout and without the inclusion of air pockets or voids in the epoxy, and to achieve structural bonding of the cracked section.

D. Inject epoxy under pressure by use of a rubber tipped nozzle held tightly against the port, or by the use of entry port fittings. Injection to begin at the lower entry port and continue until there is a show of adhesive material at the entry port directly adjacent to or above the port being pumped.

E. When adhesive travel is indicated at the next port, discontinue the injection on the port being pumped and sealed, and transfer injection to the next adjacent port. Injection must be continuous until the crack is completely filled. Fill all small radiating cracks at the same time as filling prime cracks.

F. Report any condition which prevents penetration of the crack to the Engineer.

G. Modifications to the above installation procedures, if necessary to obtain the specified penetration, must be approved by the Engineer before the crack sealing work is started.

3.07 CURING:

A. Cure repair materials in accordance with manufacturer(s) recommendations.

3.08 CLEANING OF WORK AREAS INSIDE CONDUITS

A. Cleaning

1. Following the completion of the repair work, clean all work debris from the repaired pipe segments plus any other segments soiled while undertaking the work.

2. Carry-out cleaning operations in a down-grade direction where feasible. Localized low points or sags may randomly occur in the conduits between access manholes, so brooming or other methods may be required to move wash water and debris to the conduit access points for removal.

3. Wash repair sites and the conduit invert using low-pressure water cleaning equipment operated at a pressure sufficient to remove remaining construction related debris.

B. Clean-up Inspection

1. After cleaning of the conduit has been completed, the Contractor will arrange, attend, and assist the Engineer in an inspection of the conduit within and slightly beyond the Contract Limits.

2. The Contractor will promptly rectify deficiencies, and will arrange, attend, and assist with the follow-up inspections.

3. These internal walk-through inspections will be considered part of the Total Performance inspections for this Contract.

3.09 QUALITY CONTROL TESTING

A. Compressive Strength Testing

1. Engineer will engage a testing agency to perform compressive strength testing of specimens produced by the Contractor.

2. Contractor will produce one set of compressive strength cubes for each repair material used per ASTM C109 for each day that repair materials are placed. Contractor will coordinate the testing schedule and specimen transfer procedures with the testing agency.

3. Acceptable test will be the minimum compressive strength specified by the manufacturer.

B. Tensile Pull-off Tests

1. Perform direct tensile pull-off tests in accordance with ASTM C1583 and guidance in ICRI 210.3R, in presence of Engineer.

2. Provide one set of 3 pull-off tests at the commencement of surface preparation operations and at the start of each abrasive blasting or hydrodemolition shift.

3. Acceptable test value will be minimum 250 psi with 100 percent cohesive failure in the concrete.

3.10 INSTALLATION AND TEST RECORDS:

1. Provide a record for each concrete and joint mortar repair. As a minimum, each record will include the following:

a. Owner’s pipe segment or joint identification number.

b. Date and time repair was completed.

c. Repair material and mix quantities used.

d. Special or unique repair notes.

e. Construction Photographs as required in Section 01380.

f. Other repair documentation as required in Section 02618.

END OF SECTION

SECTION 02614

CEMENT-MORTAR LINING REPAIRS

PART 1 - GENERAL

1.01 DESCRIPTION:

A. This Section includes the minimum requirements for repairing existing cement-mortar lining in the steel closure pipes and specials in the 42-inch Raw Water Conveyance Pipeline.

B. The locations of cement-mortar lining repairs shall be as indicated on the Drawings and Contract Documents. Additional locations for repair may be identified during construction by the Engineer.

C. Furnish all materials, equipment, labor, supervision, requirements for safety and all other expense required for the satisfactory performance of all Work.

D. Complete repairs to existing cement-mortar linings of steel closure pipes and specials in accordance with this Section and AWWA Standard C602 except as modified herein. Where a discrepancy exists between this Section and AWWA C602, the requirements of this Section will apply.

E. In general, the Work will consist of the following major tasks:

1. Mobilization of crew and equipment to and from project site.

2. Perform confined space entry work, including provision of all workers and equipment needed to undertake confined space entry and confined space rescue, to enable and support the repair and inspection of repairs to existing cement-mortar linings in the steel closure pipes and specials.

3. Clean and prepare the existing cement-mortar and steel surfaces to accept the repair material.

4. Repair the existing cement-mortar linings in the steel closure pipes and specials.

5. Perform a final cleaning of work areas after repairs and inspections have been completed.

6. Provide records of all repairs completed in the steel closure pipes and specials, including Quality Control tests of materials used to affect the repairs.

1.02 REFERENCES:

A. ASTM International (ASTM):

1. C39: Standard Test Method for Compressive Strength of Cylindrical Concrete Specimens.

2. C40: Standard Test Method for Organic Impurities in Fine Aggregates for Concrete.

3. C87: Standard Test Method for Effect of Organic Impurities in Fine Aggregate on Strength of Mortar.

4. C136: Standard Test Method for Sieve Analysis of Fine and Coarse Aggregates.

5. C150: Standard Specification for Portland Cement.

B. American Water Works Association (AWWA):

1. C602: Cement-Mortar Lining of Water Pipelines in Place - 4 in. (100 mm) and Larger.

C. NACE International / SSPC: The Society for Protective Coatings (NACE / SSPC):

1. NACE WJ-4 / SSPC SP WJ-4: Water Jet Cleaning of Metals – Light Cleaning

D. U.S. Department of Labor, Occupational Safety and Health Administration (OSHA):

1. 29 CFR 1910.1200 – Hazard Communication.

2. 29 CFR 1926 Subpart AA – Confined Spaces in Construction.

1.03 DEFINITIONS:

A. Conduit: the continuous 42-inch Raw Water Bypass Conveyance Pipeline noted on the Construction Drawings that starts at a bifurcation upstream of the surge tank and discharges into the Sedimentation Basin at West Parish Filters. The line is comprised of numerous Conduit Sections between Manway Access Sections and 619 individual Pipe Segments overall.

B. Conduit Access Structure: a structure noted on the Construction Drawings as a Manway Access Structure which facilitates access to the interior of the conduits. Access structures are spaced at various locations along the conduit; all with different levels of accessibility. A listing of Manway Access structures is provided on the Drawings.

C. Conduit Section: portion of a conduit that is located between two adjacent access structures.

D. Pipe Segment: Individual pipe within a Conduit Section. Standard 42-inch PCCP pipe segments are 16 feet in length. Other smaller, non-standard lengths occur.

1.04 SUBMITTALS:

A. Submit the following prior to Award upon request of the Engineer:

1. Names of all contractors / subcontractors proposed for use for this work including necessary evidence and/or experience records to ascertain their qualifications in the application of cement-based repair products.

2. Contractor / subcontractor qualifications:

a. A minimum of three (3) project references for the application of cement-mortar lining or polymer-modified concrete overlay products, similar to those specified in this Section, to repair concrete surfaces or restore cement-mortar linings on buried steel or iron pipes. Provide minimum of one (1) reference contact including email and phone information.

b. A minimum of five years' experience in applying cement-based or polymer-modified repair compounds similar to those specified in this Section.

B. Submit the following within 21 calendar days after Award in accordance with Section 01300 (Submittals).

1. Qualifications of foremen and applicators that will perform the Work, and demonstration of meeting the minimum requirements specified by the manufacturer, including a letter from the manufacturer signed by an officer of the company, stating that the workers have been trained in the proper techniques for preparing the pipes and applying the repair materials.

2. Documentation that workers performing confined space work are trained, certified, and equipped to comply with all requirements of 29 CFR 1910.146 Federal OSHA's Permit Required Confined-Space Regulations.

3. NSF 61 Certification that all materials used in the Work are non-toxic and will have no adverse effect on the cleanliness of the conduit and the quality of the raw water conveyed by it.

4. Method Statement that describes in detail the procedures proposed for accomplishing the work. At a minimum, the method statement will include:

a. Project Management, Site Supervisors, and approved personnel;

b. Project schedule and work sequencing;

c. Project setup, material storage and mixing / batching arrangements;

d. Repair area preparation procedures including collection of wash water and removed materials;

e. Mortar mixing / batching;

f. Application procedures including finishing;

g. Curing Procedures;

h. Final conduit cleaning including collection and disposal of all work debris;

i. Quality Control (QC) Procedures and Testing;

j. Project Records.

5. Safety Data Sheets (SDS) for any materials brought on-site including all repair system materials.

6. Certificate that the cement used in the manufacture of cement-mortar lining complies with ASTM C150 and this Section.

7. Certificate that the sand used in the manufacture of cement-mortar lining complies with the following:

   a. Sieve analysis, ASTM C136

   b. Test of organic impurities in sands for concrete, ASTM C40

   c. Test of the effect of organic impurities in fine aggregate on the strength of mortar, ASTM C87.

8. Cement-mortar mix design including any admixtures and pozzolanic materials that will be used.

9. Sample project records including quality control test results and repair details on a pipe-by-pipe basis (pipe number, repair dimensions and location, repair date, product lot numbers, etc.).

1.05 QUALITY ASSURANCE:

A. The Contractor is responsible for the quality of material and workmanship provided for the repair work. Inspections by the Engineer or others do not limit the Contractor's responsibility.

B. Provide a Supervisor on site, at all times work is underway, to represent the Contractor and to have authority to receive and execute instructions given by the Engineer.

C. Establish and maintain an effective quality assurance system including quality control procedures and testing to ensure compliance with the requirements of this Section.

D. Make all parts of the work accessible for inspections by the Engineer. Correct any conditions not in conformance with the specifications at no additional cost to the Owner.

E. Permit changes in the specified repair work methods only with the permission of the manufacturer and the Engineer.

1.06 DELIVERY, STORAGE AND HANDLING:

A. Deliver all materials to the job site in new, unopened containers. Each container will bear labels containing the following information:

1. Manufacturer's name.

2. Product name.

3. Generic type of material.

4. Manufacturer's batch number.

5. Shelf life date.

6. Hazardous material identification label that conforms with the OSHA Hazard Communication Standard, 29 CFR 1910.1200.

B. Handle and store materials to prevent damage or loss of labels.

C. Provide shelter to store materials in area or areas designated by the Engineer solely for this purpose. Material storage areas must be above ground and have controlled humidity and temperature as specified by the manufacturers of the materials.

D. Confine product mixing, clean-up, and associated operations to sheltered areas on the site, designated by the Contractor, which are near the repair locations. Protect materials from direct sunlight and inclement weather.

E. Do not dispose of waste materials on-site. Temporarily store waste in closed nonflammable containers, at approved locations, until final disposal. Store waste in Contractor's area no longer than 24 hours.

1.07 PROJECT/SITE CONDITIONS:

A. Conduit Description:

1. The 42-inch RWC pipe was predominately manufactured by Lock Joint Pipe Co. in 1958 and constructed in the late 1950s. It consists of approximately 9,300 feet of embedded cylinder and lined cylinder prestressed concrete cylinder pipe

(PCCP) and cement-mortar lined steel elbows, shorts, and closure cylinders. Compiled laying schedules and the available original design drawings are appended to the Construction Drawings and these specifications. The original PCCP Pipe Specification from 1958 is provided as Appendix C of these Specifications.

B. Site Specific Design Conditions:

Internal cement-mortar lining repairs shall be suitable to operate without failing structurally with:

- Internal working pressure, Pw = 150 psi
- Internal transient pressure (in excess of Pw), Pt = 60 psi
- Internal vacuum pressure, Pv = -14.7 psi (full vacuum)
- Internal static pressure, Ps = 200 psi
- Soil cover height, H = 4.5 ft minimum per drawings,
- Height of groundwater, Hw = at ground surface
- Live load = HS-20 design truck

C. Conduit Preparations:

1. The RWC pipeline (Conduit) is currently out of service and has been decommissioned and dewatered for over two years. Pockets of standing water may be present at some low spots along the pipeline.

2. Provide all equipment and procedures to dewater the conduits, as necessary, to enable manned entry into them.

3. Provide all equipment and procedures to lock-out the isolation valve(s) on the conduits.

D. Access to Conduits:

1. Owner will turn control of the Work Area to the Contractor for the duration of the Work.

2. The Contractor to provide all equipment and procedures to safely access the work areas including but not limited to ladders, ventilators, atmospheric monitors, and confined space entry equipment. (Refer to Section 01120)

3. Maintain permits and worker ingress/egress logs for the confined space entry work.

E. Water Supply for Work

1. Contractor will source, provide, and pay for all water used for the work – both potable and non-potable.

PART 2 - PRODUCTS

2.01 CEMENT:

Portland cement will be of domestic origin, Type II conforming to ASTM C150.

2.02 SAND:

A. Sand used for cement-mortar lining will conform with the requirements of AWWA C602.

B. Allow washed or saturated sand to drain at least 24 hours to a uniform moisture content before batching. Moisten dry sand before handling to prevent segregation.

C. Processing will include sorting, crushing, screening, blending, washing, separating out and wasting part of the natural materials, and other operations to make the available material conform to the requirements. In case the finer particles from the crushed coarse aggregate are mixed with sand from natural deposits, uniformly blend the two products before washing or screening to ensure a combined product of constant composition.

D. Sand as prepared for use will be of such quality that mortar cylinders made with a mixture of cement and the sand under test will develop compressive strengths at 7 and 28 days of not less than 90 percent of those developed by a mortar prepared in the same manner with the same cement and graded Ottawa testing sand, all in accordance with the method prescribed by ASTM C87.

2.03 WATER:

A. The water used in all work will be potable quality, clean and free from organic matter, alkali, salts, and other impurities that might reduce the strength, durability, or other quality of the mortar.

2.04 ADMIXTURES:

B. Admixtures conforming to ASTM C494 may be used provided that the ratio of admixture to Portland cement does not exceed that used in the qualification tests of ASTM C494.

PART 3 - EXECUTION

3.01 GENERAL REQUIREMENTS:

A. Perform work within the conduit at temperature and humidity conditions suitable for the installation and proper curing of materials in accordance with the manufacturer's recommendations. Where applicable, provide ventilation, heat and dehumidification to achieve the required conditions.

B. Coordinate the repair of existing cement-mortar linings with other work being performed.

C. Where required, install temporary dikes in the conduit to aid the collection and removal of cleaning water and debris from the conduit and prevent it from passing into adjacent conduit sections.

D. Wash water and debris will be removed from the conduit and disposed of using methods and locations that have been approved by the Engineer. Use of vacuum trucks for conduit cleaning is prohibited unless the Engineer has witnessed and the Contractor certifies that the truck has been thoroughly cleaned prior to mobilizing to any conduit site.

E. Delineation and Preparation of Concrete and Joint Repair Areas:

1. Identify and mark on the pipe segments, using grease chalk or other marking method that is durable and acceptable to the Engineer, the pipe locations where cement-mortar repairs will be performed. Perform an inspection with the Engineer to confirm that the installation sites have been correctly located.

2. Measure and record locations of all cement-mortar repairs and submit as Project Records in tabular or drawing format to the Engineer.

3.02 CEMENT-MORTAR MIX FOR FIELD-PLACED LINING:

A. Mortar for the lining will be composed of cement, sand, and water that have been well mixed and of a consistency to produce a dense, homogenous lining that will adhere firmly to the pipe surface. The proportions, by volume, of cement and sand in the mortar will be 1 part of cement to not less than 1 part or more than 1.5 parts of sand.

B. When the mixture ratio for sand and cement has been determined, measurement of the dry material will be by volume and will be controlled accurately throughout the course of the work.

C. Control the water-cement ratio and keep to a minimum, with an allowance being made as necessary for moisture which may collect on interior pipe surfaces, and as required for adhesion of mortar to the pipe.

D. Admixtures, if added, will be used in strict compliance with the manufacturer's printed recommendations.

3.03 CEMENT-MORTAR LINING INSTALLATION:

A. Cut and remove damaged cement-mortar lining so that the edges of the lining that will remain in place are slightly undercut.

B. Clean the exposed steel pipe by hand using wire brushes, using power tools fitted with wire wheels, or using other methods approved by the Engineer to remove loose rust, dirt, remnants of deteriorated lining, and other foreign materials. Remove cleaning debris and other foreign material from the exposed steel and adjacent liner surfaces using low-pressure water cleaning as described in NACE WJ-4 / SSPC SP WJ-4.

C. Install new cement-mortar lining onto the exposed steel pipe by hand plastering. Method used will produce a lining that is continuous, dense, uniform in thickness, and that transitions smoothly to the adjacent machine-placed lining. If necessary, the steel pipe surface may be moistened with water immediately prior to placing the hand-applied mortar.

D. Install the lining to a thickness equal to that of the original cement mortar lining, or to 9/16 inch as recommended in Table 1 of AWWA C602 for 42-inch steel pipe, whichever is greater.

E. Finish cement-mortar to a smooth surface by troweling with steel finishing trowels. Outer edges of hand-troweled areas may be brushed to reduce the abutting offset.

3.04 CEMENT-MORTAR LINING CRACK REPAIR:

A. Mortar-Filling Crack Repairs:

1. Repair cracks dilated 0.25 inch and greater by filling with cement-mortar conforming with the requirements of AWWA C602:

2. Clean debris and other foreign material from the cracks and the exposed steel and adjacent mortar lining surfaces using hand tools followed by low-pressure water cleaning as described in NACE WJ-4 / SSPC SP WJ-4.

3. Pack and fill the crack with cement-mortar and finish to a smooth surface by troweling with steel finishing trowels or putty knives.

B. Paste-Filling Crack Repairs:

1. Repair cracks dilated less than 0.25 inch by filling or coating with Portland cement paste:

2. Clean debris and other foreign material from the cracks and the exposed steel and adjacent mortar lining surfaces using hand tools followed by low-pressure water cleaning as described in NACE WJ-4 / SSPC SP WJ-4.

3. Fill the crack with Portland cement paste made by mixing just enough water with Portland cement to produce a thick paste that can fill and coat cracks using putty knives or brushes.

3.05 CURING:

A. Curing operations will begin immediately after completion of the mortar lining and surface finishing of each section of the conduit. Close the pipe and maintain a moist atmosphere in each section of the conduit to keep the lining continuously damp until the conduit is refilled with water.

B. After lining repairs have been completed in a conduit section, Contractor will be responsible for careful curing of the liner until the conduit is refilled with water, or until the liner has been accepted by the Engineer, but in no case for more than seven days.

3.06 CLEANING OF WORK AREAS INSIDE CONDUITS

A. Cleaning

1. Following the completion of the repair work, clean all work debris from the repaired pipe segments plus any other segments soiled while undertaking the work.

2. Carry-out cleaning operations in a down-grade direction where feasible. Localized low points or sags may randomly occur in the conduits between access manholes, so brooming or other methods may be required to move wash water and debris to the conduit access points for removal.

3. Conduit cleaning will consist of, but may not be limited to, the following tasks:

a. Removal of excess cement-mortar lining material and other construction debris from the conduit.

b. Washing of the invert portion of the conduit using low-pressure water cleaning equipment operated at a pressure sufficient to remove remaining construction related debris.

3.07 CLEAN-UP INSPECTION

A. After cleaning of the conduit has been completed, the Contractor will arrange, attend, and assist the Engineer in an inspection of the conduit within and slightly beyond the Contract Limits.

B. The Contractor will promptly rectify deficiencies, and will arrange, attend, and assist with the follow-up inspections.

C. These internal walk-through inspections will be considered part of the Total Performance inspections for this Contract.

3.08 QUALITY CONTROL TESTING

A. Materials provided and work performed will be subject to inspection by the Engineer. The Contractor will submit samples of materials when requested. Contractor will participate in and assist with inspections of lining repair operations.

B. Compressive Strength Testing:

1. Engineer will engage test lab to facilitate testing for compressive strength.

2. Provide two standard mortar compressive strength test samples per ASTM C39 for each day that cement-mortar lining is placed. Test samples will attain a minimum compressive strength of 4,500 psi in 28 days.

END OF SECTION

SECTION 02615

PCCP PIPE REPLACEMENTS

PART 1 - GENERAL

1.1 DESCRIPTION

A. This Section covers the supply and installation of PCCP pipe to rehabilitate select portions of the SWSC 42" diameter PCCP Raw Water line.

B. This Section applies to the designated sections as noted herein and the Contract Drawings that contain existing 42-inch PCCP pipe "sticks" that will be replaced with PCCP as defined herein.

1.2 REFERENCE STANDARDS

Comply with the current version of the following standards, as specified and amended herein. Where a discrepancy exists between the referenced standards and this specification, the more stringent requirement will apply.

A. American Water Works Association (AWWA)

1. AWWA C301-14(R19) PRESTRESSED CONCRETE PRESSURE PIPE, STEEL-CYLINDER TYPE

2. AWWA C304-14(R19) DESIGN OF PRESTRESSED CONCRETE CYLINDER PIPE

3. AWWA Manual M9 – Concrete Pressure Pipe – 3rd Edition

B. American Society for Testing and Materials (ASTM)

1. ASTM A648 - Standard Specification for Steel Wire, Hard Drawn for Prestressing Concrete Pipe

2. ASTM C33 - Standard Specification for Concrete Aggregates

3. ASTM C150 - Standard Specification for Portland Cement

4. ASTM C595 – Standard Specification for Blended Hydraulic Cements

5. ASTM A1011 – Standard Specification for Steel, Sheets and Strip, Hot-Rolled, Carbon, Structural, High-Strength Low-Alloy and High-Strength Low-Alloy with Improved Formability

6. ASTM A659 - Standard Specification for Commercial Steel (CS), Sheet and Strip, Carbon (0.16 Maximum to 0.25 Maximum Percent), Hot-Rolled.

7. ASTM A1018 – Standard Specification for Steel, Sheet and Strip, Heavy-Thickness Coils, Hot-Rolled, Carbon, Commercial, Drawing, Structural, High-Strength Low-Alloy, and High-Strength Low-Alloy with Improved Formability, and Ultra-High Strength.

C. All reference standards shall be inferred to be the latest revision of the specific reference standard unless a specific year is specified.

1.3 DEFINITIONS

A. PCCP replacement shall include the removal of designated sections of PCCP and replacement with closure sections or combination closure sections and new PCCP pipe.

B. Maximum Allowable Pressure (MAP) – The maximum combination of internal pressures that a pipe or lining system is anticipated to be exposed to including sustained, occasional surge and/or test pressure.

C. Maximum Allowable Operating Pressure (MAOP) – The maximum anticipated sustained internal operating pressure that a pipe system or liner is anticipated to be exposed to.

D. Occasional Surge (emergency or transient) Pressure – Short-term internal pressure events usually caused by emergency operations of the pipe network system (e.g., a rapid valve closure) or malfunction (e.g., power failure, component failure, etc.).

E. Recurring (cyclic) Surge Pressure – Internal surge pressures that occur frequently and are inherent to the design and operation of the pipe network system (such as normal pump start-up or shutdown and normal valve opening or closure). Recurring surge pressure may occur millions of times in a piping system's lifetime.

F. External Load –External loads due to earth pressure, static or fluctuating groundwater levels, or other non-dynamic loading sources.

G. Live Load – Dynamic loads due to vehicles, railways, or airplanes.

1.4 QUALITY ASSURANCE

A. Qualification

1. The materials specified herein are intended to be standard types of prestressed concrete cylinder pipe and fittings for use in transporting water.

2. All prestressed concrete cylinder pipe and fittings shall be furnished by reputable manufacturers with a minimum of ten years of experience in manufacturing prestressed concrete cylinder pipe. The manufacturing plant

shall have a current Lloyd's Register Audit Certification for the manufacture of Prestressed Concrete Cylinder Pipe. Additionally, the pipe manufacturer shall be a member of the American Concrete Pressure Pipe Association. The pipe and fittings shall be manufactured and installed in accordance with industry standards and methods and shall comply in all respects with requirements of these specifications and with the latest edition of all referenced standards and specifications.

3. The installer shall have a minimum of ten (10) years of experience in the installation of PCCP pipe and shall be approved for the installation of PCCP by the manufacturer of the pipe.

B. Testing of Pipe and Materials

1. The Manufacturer shall provide access to the Engineer or his appointed representative to conduct plant inspections, in accordance with Section 5.1 of AWWA C301. The Manufacturer shall provide a minimum of 7 calendar days notice of commencement of pipe manufacture, for the purposes of scheduling plant inspections.

2. The Manufacturer shall make, conduct, arrange, make available, obtain, and provide for all testing as described in Section 5.2 AWWA Standard C301. The following reports shall be made available to the Engineer on request:

   a. Absorption tests shall be carried out by the Contractor on specimens of the exterior coating of the pipe. These tests shall be carried out in accordance with ASTM Standard C497 Method of Testing Concrete Pipe, Sections or Tile, method A.

   b. Notwithstanding AWWA C301 4.6.8.3, no individual absorption test may exceed 10%.

   c. Notwithstanding AWWA C301 4.6.8.3, mortar tests shall be conducted on a daily basis for the entire production run.

   d. Every effort shall be taken to limit this absorption to 8% as measured in accordance with the ASTM Standard C497. The Engineer will not accept pipe with an absorption rate in excess of 10. No pipe shall be shipped until the absorption results related to the particular shipment have been obtained and are satisfactory.

C. Testing of Fittings and Special Pipe

1. Fittings and special pipe shall be tested in the same manner as pipe except that fittings and special pipe shall be tested for tightness by the dye penetrant method as specified in Section 4.7.2.2 of AWWA Standard C301.

D. Affidavit of Compliance

1. An affidavit of compliance signed by an officer of the pipe manufacturing company shall be provided stating that the pipe and fittings comply with this Specification, in accordance with Section 6.3 of AWWA C301.

1.5 SUBMITTALS

A. PCCP Submittals

1. Record Submittals

a. Submit Quality Control Records, and Acceptance Test records in a report within 30 days of completion of each liner installation.

B. Shop Drawings

1. Submit shop drawings for all PCCP Sections including termination details

C. Contractor to provide stamped drawings for all PCCP items.

PART 2 PRODUCTS

2.1 MATERIALS

A. Prestressed Concrete Pressure Pipe

1. Unless otherwise specified, the design materials and workmanship for pipe shall conform to the requirements of AWWA C301. Core and coating thickness for pipe shall be as specified in AWWA C301.

B. Cement

1. Approval in writing is required if the Contractor proposed to use fly ash or pozzolan as a supplementary cementing material in conformance with AWWA Standard C301, Section 4.4.1.

2. Approval requests should be accompanied by a submission from an independent testing laboratory complete with sampling and testing results of the material conforming to ASTM Standard C311.

C. Fittings

1. Fittings shall be manufactured using minimum steel thicknesses specified in Table 1, Section 4.7 of AWWA C301-99.

2. Flanges for fittings shall be AWWA C207-01 minimum Class D Flanges.

D. Pipe Marking

1. Each section of pipe and each fitting shall be plainly marked with a waterproof marking material both inside, on the bell or spigot end, and outside, at the pipe's midspan, the classification, the date of manufacture and marks of identification sufficient to show its proper location in the line by the reference to the laying schedule specified. The point of maximum bevel shall be marked on the end of the spigot on each piece of bevelled pipe. All bends shall be marked on the ends with the angle of deflection. The manufacturer's proposed marking system shall be included with the "Data to be Supplied by Contractor" noted herein. Colour coded markings shall be required when there is more than one pipe classification.

E. Closures

1. Closures shall be steel sleeve coupling closures.

2. Nuts and bolts used on couplings for closures shall be Type 316 stainless steel. Nuts and bolts used shall be identified with raised or indented 316 numerals.

3. The plain steel end of each closure piece shall extend 6" longer than the required length of the piece to provide an overlap in order to compensate for any correction required when installed.

4. The Contractor shall be responsible for to repair any interior or exterior mortar coating damage.

F. Pipe Couplers

1. Pipe couplers to be to the latest revision of AWWA C-219 for bolted, Sleeve Type Couplers for Plain End Pipe. Minimum requirements are:

   a. Minimum sleeve length 10"

   b. Minimum centre sleeve thickness ½"

   c. Couplings capable of accommodating up to 2 degrees deflection

   d. Bolts and nuts to be 316 Stainless Steel.

   e. Couplings to be supplied with two di-electric insulating boots

2. Couplings to be fusion bonded epoxy coated to AWWA C213, and meeting the requirements of ANSI/NSF 61 "Standard for Drinking Water System Components – Health Effects"

G. Access Tee

1. Mark to add text to cover all access points

2.2 DESIGN REQUIREMENTS

A. Pipe Design

1. The pipe shall be designed in accordance with AWWA C304 to accommodate the following loading conditions:

   a. Internal working pressure, Pw = 150 psi

   b. Internal transient pressure (in excess of Pw), Pt = 60 psi

   c. Internal vacuum pressure, Pv = -14.7 psi (full vacuum)

   d. Internal static pressure, Ps = 200 psi

   e. Soil cover height, H = 4.5 ft minimum per drawings,

   f. Height of groundwater, Hw = at ground surface

   g. Live load = HS-20 design truck

2. The steel cylinder shall be a minimum of No. 16 gauge and the minimum thickness of the high tensile reinforcing wire shall be No. 8 gauge. Mortar coating shall be a minimum of 1" thick measured from the outside of the high tensile wire.

B. Data to be Supplied by Contractor

1. Sufficient numbers of copies of all drawings and laying schedules as specified herein, shall show full details of reinforcement, concrete and joint dimensions for the straight pipe, specials, and connections, and shall be furnished by the Contractor for the review by the Engineer. No pipe shall be manufactured until the drawings have been entirely approved.

2. The data submitted by the Contractor shall include a tabulated laying schedule for each location with reference to the stationing and grade lines shown on the Drawings. This schedule shall show the locations and length of each class of pipe which the Contractor proposes to furnish, and the point of change from one class to the next shall be clearly indicated by station number. The area of steel per linear meter and such other details as are required shall be listed for each of the pipe classes proposed by the Contractor.

3. The Contractor shall be responsible for the accurate details, fabrication and fit of the pipe and specials.

4. The Contractor shall submit to the Engineer for review, design calculations for the determination of the details of the pipe reinforcement prior to the

manufacture of any pipe or specials. The manufacturer of the pipe shall have sufficient data to verify all design strengths.

2.3 DELIVERY, STORAGE AND HANDLING

A. Contractor is required to coordinate manufacture and delivery of the pipe with his sub-contractor (the manufacturer) and to meet project scheduling requirements.

B. Delivery and storage of the pipe shall be in accordance with AWWA M9 Manual – Concrete Pressure Pipe.

PART 3 EXECUTION

3.1 PRE-WORK PIPE INSPECTIONS

A. The Installer shall enter the pipe and shall positively mark each pipe requiring replacement. The Installer shall employ suitable survey methods to transfer the location of the pipe or pipes requiring replacement to the surface and verify that the pipes designated for replacement are correct pipes noted for replacement.

3.2 INSTALLATION

A. Prestressed concrete cylinder pipe and fittings shall be installed in accordance with requirements of AWWA M9 for Type R5 Bedding installation. With the proviso that initial backfill be provided as noted on the drawings with densified select granular material to a height of 12” above the top of the pipe.

As an alternate to the bedding and initial backfill noted above, the Contractor could install a 6” leveling course to conform the grade as per R5 installations in AWWA M9 an then fully encase the pipe in a CLSM as per SECTION 02212. The height of the CLSM shall be at least to a height of 12” above the top of the pipe.

B. All prestressed concrete cylinder pipe shall have a minimum of four (4) feet of cover. Pipe shall be laid to the elevations shown on the drawings unless approved otherwise by the Engineer. Small construction equipment (pick-up trucks, track hoes, front-end loaders, small, tracked tractors, etc.) shall not be operated over newly-installed pipe until at least three (3) feet of earth cover has been placed over the top of the pipe.

C. The pipe interior shall be maintained dry and broom clean throughout the construction period.

D. Gasket, gasket groove, and bell sealing surfaces shall be cleaned and lubricated with a lubricant furnished by the pipe manufacturer. The lubricant shall be approved for use in potable water and shall be harmless to the rubber gasket. Use only lubricant supplied by the pipe manufacturer. Pipe shall be laid with bell ends

looking ahead in the direction of laying. As soon as the spigot ring is centered in the bell of the previously laid pipe, it shall be forced home with approved equipment. After the gasket is compressed, verify the position of the gasket in the spigot ring groove with a feeler gage provided by the pipe manufacturer.

E. The grout diaper for PCCP shall consist of a Typar synthetic fabric layer (gray in color) and a layer of closed cell foam. These layers are sewn together along with a pair of 5/8" wide steel bands at each edge which are used to secure the diaper to the pipe exterior. Use only grout diapers supplied by the pipe manufacturer. A stretching tool is used to tighten the steel bands. Once the bands are pulled tight, a steel clip is crimped around the bands to hold them in position. It is important that the diaper be carefully placed against the exterior surface of the pipe to ensure that it is flush with no gaps or gathers. The closed cell foam surface is to be placed against the pipe exterior.

F. The wet grout will flow down to the bottom of the diaper and begin to bulge it out. It is often helpful to place some bedding material (or sandbags) directly under the diaper at the bottom to support the weight of the wet grout. Take care to not push excessive amounts of bedding material under the diaper such that the diaper is pushed up into the joint recess impeding the flow of wet grout.

G. Mix the grout using one part ASTM C150 Type 1 or Type 2 Portland cement or ASTM C595 Type IL Portland limestone cement to not more than three parts clean sand with sufficient water to achieve a pourable consistency. The grout should look and pour like a thick cream. Carefully pour the mixed grout into the gap at the top of the diaper. As the pouring proceeds, the workers must inspect the diaper around the joint periphery to ensure that the grout is flowing all around. Once the diaper is full and wet grout is puddling at the gap at the top, apply a stiffer mix the consistency of wet brick mortar over the joint insuring that all steel components of the joint are covered.

H. All pipe shall be sound and clean before laying. When laying is not in progress, including lunchtime, the open ends of the pipe shall be closed by watertight plug or other approved means to prevent unauthorized entrance of people, animals, dirt, or water into the pipeline already installed. Good alignment shall be preserved in laying. The deflections at joints shall not exceed the amount recommended by the pipe manufacturer.

I. Final backfill for all PCCP pipe and closures shall be a CLSM material as noted on the Drawings.

3.3 TESTING

A. The completed pipeline (or completed sections of the pipeline) shall have each and every pipe joint tested with an Internal Joint Tester to confirm its hydrostatic integrity in accordance with Section 02612.

3.4 CLEANING

A. At the conclusion of the work, thoroughly clean all of the new pipelines by flushing with water or other means to remove all dirt, stones or other debris which may have entered during the construction period. If, after this cleaning, obstructions remain, they shall be removed at the Contractor's Expense.

END OF SECTION

SECTION 02616

INLINE FREE-SWIMMING ACOUSTIC PIPELINE LEAK AND AIR POCKET INSPECTION

PART 1 - GENERAL

1.01 DESCRIPTION:

A. This Section includes the minimum requirements for inline leak and air pocket detection using a free-swimming inspection tool for the 42-inch Raw Water Bypass Conveyance Pipeline while the line remains in service and under pressure.

B. Furnish all materials, equipment, labor, supervision, requirements for safety, and all other expense required for the satisfactory performance of all Work.

C. Inline free-swimming acoustic pipeline leak and air pocket inspection involves insertion of an inspection tool into a pipeline while the pipeline remains in service and under pressure. The inspection tool travels through the pipeline, carried by the flow of water. The tool travels through the pipe and can be tracked from above ground. When the inspection is completed, the inspection tool is withdrawn from the pipe at a prepared downstream termination (extraction) point. The presence, location, and estimated magnitude of leaks and air pockets are detected, with their locations marked on the surface.

D. Complete the preparation, flow and pressure measurements, tool insertion, inline inspection and tool tracking, tool retrieval, data extraction, processing and reporting for the leak and air pocket inspection. Where a discrepancy exists between this Section and the written instructions of the leak detection manufacturer, the most stringent requirement will apply.

E. In general, the Work will consist of the following major tasks:

1. Locate access manways where the free-swimming inspection tool will be launched and retrieved.

2. Perform confined space entry work to enable and support the launch and retrieval of the free-swimming leak detection tool inside access vaults, including provision of all workers and equipment needed to undertake confined space entry in compliance with 29 CFR 1926 Subpart AA.

3. Locate access manways where free-swimming tool tracking will be performed and mount tracking sensors preferably on steel blind flanges and in accordance with manufacturer’s recommendations.

4. Prepare launch and retrieval sites ensuring that both locations are safe to work and enter. Ensure that combination air-release vacuum (CAV) valves have been removed from both launch and retrieval sites and that the isolation gate valves are closed and not leaking.

5. Conduct flow and pressure measurements at the upstream launch site (where the hydrostatic pressure will be lower compared to the retrieval site) using an insertion-style flowmeter and standard pressure gauge.

6. If flow and pressure conditions comply with tool deployment conditions, mobilize one tracking team to the first tracking site and ensure that tracking sensor is working. Before launching, install tool extraction equipment at retrieval site ensuring that the extraction net is fully opened and properly deployed.

7. Launch inspection tool at the upstream launch site noting time of deployment.

8. Track free-swimming tool from launch site ensuring that it deployed correctly and is moving down the pipeline. Once its detected from the next downstream tracking site, remove the launch equipment and reinstate the access manway vault.

9. Continue to track the free-swimming tool along the pipeline "leap frogging" from one tracking site to the next.

10. Extract free-swimming inspection tool at downstream extraction site, close isolation gate valve and remove extraction equipment. Reinstate access manway vault.

11. Download and process inspection data, check for errors, and prepare inspection report noting leak and air pocket locations and approximate sizes.

12. Provide records of inspection.

13. Clean work areas inside and around the access manways after completing the in-line leak detection inspection.

1.02 REFERENCE STANDARDS:

Comply with the current version of the following standards, as specified and amended herein. Where a discrepancy exists between the referenced standards and this specification, the more stringent requirement will apply.

A. U.S. Department of Labor, Occupational Safety and Health Administration (OSHA):

1. 29 CFR 1910.1200 – Hazard Communication.

2. 29 CFR 1926 Subpart AA – Confined Spaces in Construction.

1.03 DEFINITIONS

A. Conduit: the continuous 42-inch Raw Water Bypass Conveyance Pipeline noted on the Construction Drawings that starts at a bifurcation upstream of the surge tank and discharges into the Sedimentation Basin at West Parish Filters. The line is comprised of numerous Conduit Sections between Manway Access Sections and 619 individual Pipe Segments overall.

B. Conduit Access Structure: a structure noted on the Construction Drawings as a Manway Access Structure which facilitates access to the interior of the conduits. Access structures are spaced at various locations along the conduit; all with different levels of accessibility. The locations of Manway Access structures are detailed on the Drawings.

1.04 SUBMITTALS:

A. Submit the following prior to Award upon request of the Engineer.

1. Names of all subcontractors proposed for use for this work including necessary evidence and/or experience records to verify their qualifications in the leak and air pocket detection of pressurized pipelines using in-line free-swimming acoustic leak detection equipment.

2. Contractor / subcontractor qualifications:

a. A minimum of three years' commercial experience in acoustic in-line leak and air pocket detection of pipelines of similar diameter to those on this project utilizing the proposed equipment.

b. A minimum of three (3) project references for in-line acoustic leak and air pocket detection of similar diameter and pressure to those on this project. Provide minimum of one (1) reference contact including email and phone information.

c. A minimum of at least 50 successful insertions and extractions of the proposed equipment under live operating conditions.

d. A letter from the manufacturer of the leak and air pocket detection equipment on the manufacturer's letterhead and signed by an officer of the company, stating that the contractor / subcontractor has been trained in the proper techniques for in-line acoustic leak and air pocket detection with the manufacturer's equipment.

3. Detailed description of the in-line acoustic leak and air pocket detection equipment proposed for the Work including documentation that the equipment is the product of manufacturers having more than three years' regular production of successful leak and air pocket detection equipment.

4. If proposed equipment is not from the pre-approved list, evidence of meeting all performance requirements must be submitted.

B. Submit the following within 15 days after Award in accordance with Section 01300 (Submittals).

1. Qualifications of project manager including project references that will perform the Work, and demonstration of meeting the minimum requirements specified by the in-line leak and air pocket detection manufacturer (if any).

2. Qualifications of field crew including project references that will perform the Work.

3. Documentation that workers performing confined space work are trained, certified, and equipped to comply with all requirements of 29 CFR 1910.146 Federal OSHA's Permit Required Confined-Space Regulations.

4. NSF 61 Certification that all materials proposed for use in the conduits are non-toxic and have no adverse effect on the quality or appearance of potable water.

5. Manufacturer's recommendations, installation, tracking and extraction procedures for all preparation and execution of the Work and safety requirements.

6. Material Safety Data Sheets (MSDS) for any materials brought on-site (if any).

7. Detailed description of the equipment and methods to be used to accomplish the Work, including the sequence of operations to be coordinated with other works in progress.

1.05 QUALITY ASSURANCE:

A. Comply with the requirements specified herein.

B. Adhere strictly to the manufacturer's recommendations.

C. The Contractor is ultimately responsible for the in-line leak and air pocket detection work. Inspections by the Engineer or others do not limit the Contractor's responsibility. Correct any conditions not in conformance with the specifications at no additional cost to the Owner.

D. The Contractor shall assign a qualified field inspection team with a supervisor having conducted a minimum of 25 successful insertions and withdrawals of the proposed equipment under live operating conditions

E. Make all parts of the work accessible for inspections by the Engineer.

F. Allow changes in the specified work methods only with the permission of the Engineer.

PART 2 - PRODUCTS

2.01 GENERAL:

A. Materials used for the Work will be certified to NSF 61 and will have no adverse effect on the quality or appearance of potable water.

2.02 MANUFACTURERS:

A. In-line leak and air pocket detection shall be:

1. SmartBall® inline free-swimming leak and air pocket inspection tool as manufactured by Xylem.

2. Approved equal.

2.03 MATERIALS:

A. Site Specific Design Conditions

In-line leak and air pocket detection system shall be suitable to operate without leaking or failing with:

- Internal working pressure, Pw = 150 psi

- Internal transient pressure (in excess of Pw), Pt = 60 psi

- Internal vacuum pressure, Pv = -14.7 psi (full vacuum)

- Internal static pressure, Ps = 200 psi

- Tool extraction pressure, P_E = 210 psi

B. Materials and Workmanship

Materials and workmanship shall comply with the manufacturer's recommendations.

C. Minimum Requirements

1. Pipeline Operation

a. The inspection tool must be able to successfully inspect pipelines in operation at pressures between 5 and 200 psi, with flow rates between 1 and 12 feet per second.

2. Tool Insertion, Deployment, and Extraction

a. The inspection tool must be inserted into and extracted from the pipeline while it remains in service. The sensor must run internally through the pipeline, to ensure that it passes within 1 pipe diameter of pipeline leaks.

b. The inspection tool must be capable of being inserted and retrieved through standard taps with full-bore isolation valves (ball valves, gate valves, or corporation stops). The use of existing taps, as are typically present at air release valve assemblies, is preferred.

3. Leak Sensitivity and Location Accuracy

a. The inspection system shall be capable of detecting leaks of 0.1 US Gallons per minute at pressures of 90 psi.

b. The inspection system shall be proven capable of consistently providing the surface location of leaks to within +/- 3 feet accuracy.

c. The inspection tool must contain both an acoustic sensor and a device for establishing its surface location during the survey.

PART 3 - EXECUTION

3.01 GENERAL REQUIREMENTS:

A. Perform work within the access manways and provided pipeline operating conditions (flow and pressure) in accordance with the manufacturer's recommendations.

B. Coordinate in-line leak and air pocket detection work with other work being performed.

C. Check actual flow velocity in the pipeline making sure it meets or exceeds the required flow velocities prior to inserting the inspection tool.

3.02 INSERTION AND EXTRACTION OF INSPECTION TOOL

A. Insertion

1. Insertion of the leak and air pocket detection tool shall conform to the requirements of the manufacturer and the supplementary requirements noted herein.

2. In-line leak and air pocket detection tool shall be inserted into the operating pipeline at the upstream insertion site (Manway MH-1A) without shutting the pipeline down.

3. The Contractor, with input from the Owner, shall set and operate the downstream energy dissipation valve(s) to provide constant flow of acceptable velocity for the duration of the inspection. The Contractor shall not shut the pipeline down to insert the inline inspection tool.

4. Monitor progress of inspection tool via surface tracking.

B. Preparation of Tool Tracking Manways:

1. At each tool tracking location an acoustic tracking sensor shall be installed on the 30-inch blind flange by first removing a small area of paint by grinding followed by gluing the sensor on to the prepared metal surface. Any exposed metal surface area shall be painted with a metal primer and suitable epoxy paint to prevent localized corrosion.

2. The tracking sensor shall not be mounted to isolation gate valves, valve stems or bodies of combination air-release vacuum valves (CAV’s).

C. Extraction:

1. Extraction of the leak and air pocket detection tool shall conform to the requirements of the manufacturer and the supplementary requirements noted herein.

2. In-line leak and air pocket detection tool shall be extracted from the operating pipeline at the downstream extraction site (Manway MH-10A) without shutting the pipeline down.

3. The Owner shall not shut the pipeline down to extract the inline inspection tool.

D. Inspection Records and Reporting:

1. Provide a record for each tracking sensor installation.

2. The Contractor shall analyze the acoustic and location data from the inspection and submit a draft report to the Engineer within three weeks of the inspection. The report shall include, at a minimum, the following:

a. Owner's manway identification number used for insertion, tracking and extraction.

b. Date and time free-swimming inline leak and air pocket inspection tool was launched and retrieved.

c. Operating pressure and flow velocity measured at the insertion manway location.

d. Names of inspection team members.

e. Location and approximate size of all leaks and air pockets.

f. Discussion of the inspection data, identification and discussion of all leak and air pocket signals, and any anomalies.

g. Discussion of the data used to calculate the location of each anomaly with an assessment of the accuracy of the calculation.

h. Inspection Photographs as required in Section 01380.

i. An electronic copy of the Draft Report shall be delivered to the Owner within three weeks of completing all inspections.

j. The Owner will have two weeks to review and comment on the Draft Report.

k. Within two weeks of receipt of any comments from the Owner, the Contractor shall submit an electronic copy of the Final Report which addresses any comments or questions from the Engineer.

END OF SECTION

SECTION 02617

REMOTE TRANSIENT PRESSURE MONITORS

PART 1 - GENERAL

1.01 DESCRIPTION:

A. This Section includes the minimum requirements for remote transient pressure monitoring (RTPM) of the 42-inch Raw Water Bypass Conveyance Pipeline.

B. Furnish all materials, equipment, labor, supervision, requirements for safety, and all other expense required for the satisfactory performance of all Work.

C. Complete the supply and installation of external pipe pressure transducers and pre-programmed and pre-configured readout units (data loggers), easy-connect solar panels, environmental enclosures to house readout units, deep-cycle 12V batteries, GPS antennas, and cellular antennas in accordance with this Section and the written instructions of the RTPM manufacturer. Where a discrepancy exists between this Section and the written instructions of the RTPM manufacturer, the most stringent requirement will apply.

D. In general, the Work will consist of the following major tasks:

1. Procure RTPM units and deliver to project site.

2. Perform confined space entry work to enable and support the installation of RTPM sensors inside access vaults, including provision of all workers and equipment needed to undertake confined space entry in compliance with 29 CFR 1926 Subpart AA.

3. Locate access manways where RTPM sensors are to be fitted.

4. Locate and prepare ½-inch threaded connections (i.e., Corporations) on newly installed 30-inch blind flanges inside access vaults for the installation of pressure transducers and mounting of datalogger readout units.

5. Install the pressure transducers, wiring, and readout units including connectors needed between the pressure transducers (1/4" threaded connection) and ½" (or larger) Corporations.

6. Install environmental enclosures (to house readout unit / datalogger) and 12V batteries inside access vaults.

7. Install easy-connect solar panels and GPS and cellular antennas on the access manways.

8. Perform quality control inspection on the pressure transducers and RTPM installations to confirm they are correctly and securely installed and are watertight.

9. Provide records of installation and inspection for each RTPM unit installed.

10. Clean work areas inside the access manways after the RTPM units have been successfully installed and Quality Control inspections have been completed.

1.02 REFERENCE STANDARDS:

Comply with the current version of the following standards, as specified and amended herein. Where a discrepancy exists between the referenced standards and this specification, the more stringent requirement will apply.

A. ASTM International (ASTM):

1. F2070: Standard Specification for Transducers, Pressure and Differential, Pressure, Electrical and Fiber-Optic.

B. U.S. Department of Labor, Occupational Safety and Health Administration (OSHA):

1. 29 CFR 1910.1200 – Hazard Communication.

2. 29 CFR 1926 Subpart AA – Confined Spaces in Construction.

1.03 DEFINITIONS

A. Conduit: the continuous 42-inch Raw Water Bypass Conveyance Pipeline noted on the Construction Drawings that starts at a bifurcation upstream of the surge tank and discharges into the Sedimentation Basin at West Parish Filters. The line is comprised of numerous Conduit Sections between Manway Access Sections and 619 individual Pipe Segments overall.

B. Conduit Access Structure: a structure noted on the Construction Drawings as a Manway Access Structure which facilitates access to the interior of the conduits. Access structures are spaced at various locations along the conduit; all with different levels of accessibility. The locations of Manway Access structures are detailed on the Drawings.

1.04 SUBMITTALS:

A. Submit the following prior to Award upon request of the Engineer.

1. Names of all subcontractors proposed for use for this work including necessary evidence and/or experience records to verify their qualifications in the installation of remote transient pressure monitoring.

B. Submit the following within 15 days after Award in accordance with Section 01300 (Submittals).

1. Qualifications of foremen and installers that will perform the Work, and demonstration of meeting the minimum requirements specified by the RTPM manufacturer (if any).

2. Documentation that workers performing confined space work are trained, certified, and equipped to comply with all requirements of 29 CFR 1910.146 Federal OSHA's Permit Required Confined-Space Regulations.

3. NSF 61 Certification that all materials proposed for use in the conduits are non-toxic and have no adverse effect on the quality or appearance of potable water.

4. Manufacturer's recommendations, product data sheets and installation procedures for all preparation and installation of the Work including surface preparation, ambient condition requirements and safety requirements.

5. Material Safety Data Sheets (MSDS) for any materials brought on-site.

6. Detailed description of the equipment and methods to be used to accomplish the Work, including the sequence of operations to be coordinated with other works in progress.

1.05 QUALITY ASSURANCE:

A. Comply with the requirements specified herein.

B. Adhere strictly to the manufacturer's recommendations.

C. The Contractor is ultimately responsible for the RTPM installation work. Inspections by the Engineer or others do not limit the Contractor's responsibility. Correct any conditions not in conformance with the specifications at no additional cost to the Owner.

D. Make all parts of the work accessible for inspections by the Engineer.

E. Allow changes in the specified repair work methods only with the permission of the Engineer.

1.06 DELIVERY, STORAGE AND HANDLING:

A. Comply with the requirements noted herein.

B. Deliver all materials to the job site in new, unopened containers. Each container shall bear the manufacturer's name and label. Labels on all material containers shall contain the following information:

1. Name of product.

2. Manufacturer's name.

3. Generic type of material.

C. Handle and store materials to prevent damage or loss of label. Protection of materials is the Contractor's responsibility.

D. Provide shelter to store materials in area or areas designated by the Engineer solely for this purpose. This area must be above ground and have controlled humidity and temperature as specified by the manufacturer(s) of the materials.

E. Do not dispose of waste materials on-site.

F. Store waste in a location approved by the Engineer temporarily in closed, nonflammable containers until final disposal. Keep no rubbish in Contractor's area longer than 24 hours.

PART 2 - PRODUCTS

2.01 GENERAL:

A. Materials used for the Work will be certified to NSF 61 and will have no adverse effect on the quality or appearance of potable water.

2.02 MANUFACTURERS:

A. Remote transient pressure monitoring shall be:

1. SurgeWave Defender transient pressure monitoring system as manufactured by Blacoh Industries including -1 to 30 Bar standard ¼" MNPT pressure transducer and 20-ft cable, 100 Hz read/record rate, cellular antenna and 10-ft extension cable, AC adaptor, 12 VDC battery cable, and web (cloud-based) interface for remote monitoring and connectivity.

2. Approved equal

2.03 MATERIALS:

A. Site Specific Design Conditions

RTPM system shall be suitable to operate without leaking or failing with:

- Internal working pressure, Pw = 150 psi
- Internal transient pressure (in excess of Pw), Pt = 60 psi
- Internal vacuum pressure, Pv = -14.7 psi (full vacuum)
- Internal static pressure, Ps = 200 psi

B. Materials and Workmanship

Materials and workmanship shall comply with the manufacturer's recommendations.

PART 3 - EXECUTION

3.01 GENERAL REQUIREMENTS:

A. Perform work within the access manways at temperature and humidity conditions suitable for the installation in accordance with the manufacturer's recommendations.

B. Coordinate RTPM installation work with other work being performed.

3.02 INSTALLATION OF RTPM UNITS

A. Installation

1. Installation of RTPM Units shall conform to the requirements of the manufacturer and the supplementary requirements noted herein.

2. RTPM Units are required to record normal operating pressures and transient events (surge pressures) during planned and unplanned operating conditions (i.e., pump start/stop, valve opening/closing, etc.). RTPM consists of a programmable high-frequency datalogger connected to a pressure transducer with web-based functionality that is installed at the appropriate location as shown on the Contract Documents.

B. Preparation of Access Manways:

1. At each RTPM location one pressure transducer will be installed and connected to a readout unit (datalogger) which can be monitored remotely, and a deep-cycle 12V 140 AH battery. Each battery will be connected to a back-up solar panel for recharging.

C. RTPM Installation:

1. Immediately prior to fitting the pressure transducer, clean the area taking care not to incorporate dust or sediment from unprepared pipe surfaces.

2. Install the pressure transducer in accordance with the manufacturer’s written instructions.

3. Connect the pressure transducer cable to the readout unit in accordance with the manufacturer’s written instructions.

4. Connect all other cable(s) and wiring including cellular antenna, GPS antenna, 12V battery cable, and solar panel in accordance with the manufacturer’s written instructions.

5. Mount the readout unit and 12V deep-cycle battery inside the manway access vault and secure all cables and wires in such a way to not interfere with other appurtenances during normal operating and maintenance conditions.

6. Run all necessary cables and wires for the externally mounted solar panel, cellular antenna, and GPS antenna through the 6” steel vent pipe.

7. Position and mount the solar panel in accordance with the manufacturer's written instructions.

D. Installation and Test Records:

1. Provide a record for each RTPM installation. As a minimum, each record will include the following:

a. Owner's manway identification number.

b. Date and time RTPM installation was completed.

c. Serial numbers for all components.

d. Construction Photographs as required in Section 01380.

e. Other repair documentation as required in Section 02618.

END OF SECTION

SECTION 02618

HD CCTV AND LIDAR DEFECT MAPPING

PART 1 - GENERAL

1.01 SUMMARY

A. This Specification includes the minimum requirements for performing internal HD (high-definition) CCTV (4K) and LiDAR mapping inspections in the 42-inch Raw Water By-Pass Conveyance Pipeline to identify, map, estimate affected area, and record all visible pipe and joint defects.

B. Provide all equipment, tools, labor, materials, and incidental services necessary to perform all work for closed circuit television (CCTV) and LiDAR inspections of the pipeline as indicated and in compliance with the Contract Documents.

C. Complete the pre-repair and post-repair HD CCTV and LiDAR mapping of the entire 42-inch raw water by-pass conveyance pipeline in accordance with this Section.

D. In general, the Work will consist of the following major tasks:

1. Mobilization of crew and equipment to and from project site.

2. Perform confined space entry work to enable and support the pressure testing of pipe joints in the PCCP conduits, including provision of all workers and equipment needed to undertake confined space entry and confined space rescue in compliance with OSHA 29 CFR 1910.146.

3. Perform internal HD CCTV and LiDAR mapping of the entire 42-inch raw water bypass conveyance pipeline before undertaking any pipe and joint repairs ensuring that all visible defects are properly identified, mapped and recorded.

4. Perform internal HD CCTV and LiDAR mapping of the entire 42-inch raw water bypass conveyance pipeline after all pipe and joint repairs have been completed and approved by the Engineer. Ensure that all repairs are properly identified, mapped and recorded.

5. Provide inspection reports of both the pe-repair and post-repair inspections documenting individual pipe and joint defects and classification, locations, and approximate affected areas (both pre-repair and post-repair).

1.02 REFERENCES

A. Comply with the most recent version of the following reference standards, as specified and amended herein. Where a discrepancy exists between the referenced standards and this specification, the more stringent requirement will apply.

1. U.S. Department of Labor, Occupational Safety and Health Administration (OSHA):

   a. 29 CFR 1910.146 – Permit Required Confined-Spaces.

   b. 29 CFR 1910.1200 – Hazard Communication.

2. National Association of Sewer Service Companies (NASSCO) Pipeline Assessment Certification Program (PACP).

1.03 DEFINITIONS

A. Conduit: the continuous 42-inch Raw Water Bypass Conveyance Pipeline noted on the Construction Drawings that starts at a bifurcation upstream of the surge tank and discharges into the Sedimentation Basin at West Parish Filters. The line is comprised of numerous Conduit Sections between Manway Access Sections and 619 individual Pipe Segments overall.

B. Conduit Access Structure: a structure noted on the Construction Drawings as a Manway Access Structure which facilitates access to the interior of the conduits. Access structures are spaced at various locations along the conduit; all with different levels of accessibility. A listing of Manway Access structures is provided on the Drawings

C. Conduit Section: portion of a conduit that is located between two adjacent access structures.

D. Pipe Segment: Individual pipe within a Conduit Section. Standard 42-inch PCCP pipe segments are 16 feet in length. Other smaller, non-standard lengths occur.

E. CCTV Inspection: Operation necessary to complete a high-definition, true-color visual inspection for verification of existing internal pipeline conditions.

F. LiDAR (Light Detection and Ranging) Inspection: Operation necessary to complete an accurate assessment of internal pipe wall and joint condition by visually mapping affected areas.

G. AVI: AVI, which stands for Audio Video Interleave, developed by Microsoft© is the acronym given to a family of multimedia container formats as part of its video for Windows© software.

H. MPEG: MPEG, which stands for Moving Pictures Expert Group, is the acronym given to a family of international standards fused for coding visual information in a digital compressed format.

I. MOV: MOV file, a common multimedia container file format developed by Apple© for use and compatible with both Macintosh© Quicktime and Windows© platforms. MOV files commonly use the MPEG-4 codec for compression.

J. HDD: Portable Hard Disk Drive. For the purposes of this specification, HDD shall be written in accordance with the ISO-9660 Level 2 specifications.

1.04 SUBMITTALS

A. Submit the following prior to Award upon request of the Engineer:

1. Names of all subcontractors proposed for use for this work including necessary evidence and/or experience records to verify their qualifications in the inspection and mapping of pipe and joint defects in reinforced-concrete and/or PCCP pipe using HD CCTV and LiDAR.

2. Contractor / subcontractor qualifications:

a. A minimum of one year's experience in pipe and joint defect mapping using HD CCTV and LiDAR in reinforced-concrete or PCCP pipelines of similar diameter to those on this project.

b. A minimum of three (3) project references for pipe and joint defect mapping using HD CCTV and LiDAR in reinforced-concrete pipelines of similar diameter to those on this project. Provide minimum of one (1) reference contact including email and phone information.

c. A letter from the manufacturer of the pipe and joint defect mapping equipment, on the manufacturer's letterhead and signed by an officer of the company, stating that the contractor / subcontractor has been trained in the proper techniques for pipe and joint defect mapping using HD CCTV and LiDAR with the manufacturer's equipment.

3. Detailed description of the pipe and joint defect mapping equipment proposed for the Work including documentation that the equipment is the product of manufacturers having more than three years' regular production of successful pipe and joint defect mapping equipment.

4. If proposed equipment is not from the pre-approved list, evidence of meeting all performance requirements must be submitted.

B. Submit the following within 15 days after Award in accordance with Section 01300 (Submittals):

1. Qualifications of foreman and equipment operators that will perform the Work, and demonstration of meeting the minimum requirements specified by the HD CCTV and LiDAR equipment manufacturer.

2. Documentation that workers performing confined space work are trained, certified, and equipped to comply with all requirements of 29 CFR 1910.146 Federal OSHA's Permit Required Confined-Space Regulations.

3. NSF 61 Certification that all materials proposed for use in the Work are non-toxic and will have no adverse effect on the quality or appearance of potable water.

4. Safety Data Sheets (SDS) for any materials brought on-site (if any).

5. Detailed description of the equipment and methods to be used to accomplish the Work, including the sequence of operations to be coordinated with other works in progress.

6. Sample Inspection Report: The Contractor shall submit to the Engineer the following documentation to ensure quality and conformity requirements of this contract:

    a. Provide a sample report of a pipeline inspection including digital data files, of an actual pipeline performed by each device (HD CCTV and LiDAR) to be used on this Contract for review at least two (2) weeks before beginning the inspection work.

    b. Submit two (2) copies of visual recording to the Engineer. The Engineer will review the inspections for completeness and accuracy of content, to ensure that the required information is provided, and the recording quality is acceptable. If the Engineer determines that the recording is defective or not of adequate quality, the Contractor shall re-perform the CCTV inspection at the Contractor's expense.

    c. Submit sample observation photos in the sample submittal.

    d. Clearly identify the equipment make, model and serial number for the sample and all submittals.

    e. Demonstrate the resolution of each camera using the recording resolution specified herein.

    f. If the Engineer determines that the sample recording is defective or not of adequate quality, the Contractor shall correct deficiencies and re-perform pipeline inspection at the Contractor's expense.

    g. Use the report submission accepted by the Engineer as a benchmark for subsequent inspection report submissions.

    h. No inspection work is to be performed until the sample inspection reports have been accepted by the Engineer.

1.05 QUALITY ASSURANCE:

A. Comply with the requirements specified herein.

B. Adhere strictly to the manufacturer's recommendations.

C. Provide a Supervisor on site, at all times work is underway, to represent the Contractor and to have authority to receive and execute instructions given by the Engineer.

D. Make all parts of the work accessible for inspections by the Engineer.

E. Establish and maintain an effective quality control system including quality control procedures and testing to ensure compliance with the requirements of this Section.

1.06 PROJECT/SITE CONDITIONS:

A. Conduit Description:

1. The 42-inch RWC pipe was predominately manufactured by Lock Joint Pipe Co. in 1958 and constructed in the late 1950s. It consists of approximately 9,300 feet of embedded cylinder and lined cylinder prestressed concrete cylinder pipe (PCCP). Compiled laying schedules and the available original design drawings are appended to the Construction Drawings and these specifications.

2. The original PCCP Pipe Specification from 1958 is provided as an Appendix C to these Specifications.

B. Conduit Preparations:

1. The RWC pipeline (Conduit) is currently out of service and has been decommissioned and dewatered for over two years. Pockets of standing water may be present at some low spots along the pipeline.

PART 2 - PRODUCTS

2.01 GENERAL

A. Materials used for the Work will be certified to NSF 61 and will have no adverse effect on the quality or appearance of potable water.

2.02 MANUFACTURERS

A. HD CCTV Equipment:

1. Custom-built robotic crawler as manufactured by Pipeline Inspection and Condition Analysis (PICA).

2. Responder robotic crawler as manufactured by RedZone, Robotic, Inc.

3. PureRobotics robotic crawler as manufactured by Xylem.

4. Custom-built robotic crawler as manufactured by AquaCoustic Remote Technologies Inc.

5. Approved equal.

B. LiDAR / TOFL Equipment:

1. Custom-built robotic crawler to collect LiDAR data as manufactured by Pipeline Inspection and Condition Analysis (PICA).

2. PureRobotics robotic crawler to collect LiDAR data as manufactured by Xylem.

3. Custom-built robotic crawler to collect TOFL data as manufactured by AquaCoustic Remote Technologies Inc.

4. Approved equal.

2.03 MINIMUM REQUIREMENTS:

A. HD CCTV Inspection Equipment

1. A complete CCTV system, including a camera, lighting, electronic footage counter, computer and monitor, mobile television studio, and digital video recorder/player used for the televising operations shall be specifically designed for sewer inspections. Video inspection is to consist of the following:

a. Video camera capable of panning 360° and tilting 270° with optimum picture quality provided by focus and iris adjustment. Focal range to be adjustable from 3 inches to infinity.

b. The inspection equipment shall be capable of inspecting a minimum 1,500 linear feet of pipeline without access to a manway in between.

c. The inspection equipment shall be capable of clearly televising the interior of the 42-inch diameter raw water conveyance bypass pipeline.

d. The camera should be specifically designed and constructed for such inspections and shall have above ground control for forward and backward movement in the pipeline using tracked, wheeled, or tethered skid or floatation devices.

e. Capture the inspections in digital format in color from the live video source on archival grade HDD to the following minimum requirements:

(1) MPEG-2 or MPEG-4 format (MPEG-4 preferred).

(2) Picture Size: 1024x768 (or greater) @ 29.97 (minimum) frames per second.

(3) Data/Bit Rate: 6.0 Mbit/sec.

f. Lighting for the camera shall be waterproof and suitable to allow a clear picture of the entire periphery of the pipe. The camera shall be operative and provide a clear picture in 100 percent humidity conditions. Lighting shall be adjustable to allow an even distribution of light around the pipe perimeter without loss of contrast, flare out of picture, or shadowing. Lighting shall illuminate the pipeline ahead of the camera to be able to determine general condition, features and upcoming defects.

(1) An unclear picture due to excessive lighting (image flare), the lack of lighting or the presence of fog, steam, or excessive humidity will be considered unsatisfactory. The Contractor is responsible for identifying and implementing corrective actions to obtain suitable video quality, such as using fans or ventilation systems to dissipate the fog or by the heating of incoming air to mitigate fog.

(2) A blurred picture will be considered unsatisfactory.

(3) The Contractor is responsible for presenting issues regarding questionable video quality immediately to the attention of the Engineer.

(4) Light heads shall be changed upon the request of the Engineer.

g. Picture quality and definition shall be to the satisfaction of the Engineer and if unsatisfactory, equipment shall be removed from the pipeline and no payment shall be made.

h. Video overlay equipment capable of superimposing a minimum of 15 lines with up to 30 characters per line of alphanumeric information onto the video recording.

i. The focal length is the intersection point between the camera lenses widest horizontal viewing angle and the pipe's side periphery (03 or 09 o'clock) when the camera is level and looking forward. The rear of the camera must be positioned at the start of the pipe where the camera's physical distance is added to the focal length. This total distance is known as the cable calibration distance or cable set point. Record the distance from the access manway to pipe interface to the cable calibration distance at the start of the inspection and adjust the distance reading so that zero is at the access manway to start of pipe interface.

2. The inline inspection platform shall:

a. Be capable of inspecting a minimum 1,500 linear feet of pipeline without access to an access manway in between.

b. Have independently controlled drive tracks that enable the platform to maneuver around bends and climb over debris up to 12-inches in height.

c. Be operable under partially submerged flow conditions.

d. Be operable in pipelines constructed of standard pipe materials including, but not limited to, concrete and steel.

e. Be tethered to facilitate extraction of the platform from the pipeline, without causing damage to the pipeline infrastructure, in the event the equipment fails or otherwise becomes uncontrollable within the pipeline.

f. Be equipped with sufficient high intensity lighting to illuminate the 42-inch diameter pipeline for visual inspection.

g. Have capability for simultaneous data collection from multiple inspection sensors/technologies including, but not limited to, CCTV video inspection and LiDAR scanning, as necessary.

h. Viewing software shall be provided at no cost to the Owner or the Engineer to ensure the user has full autonomy when viewing the pipeline. No water droplets, debris marks or similar shall exist on the lens that would cause image blur or inhibit the clear and uninterrupted view of the pipe during the inspection.

3. In areas where a self-propelled track-mounted platform is not possible to use during the inspections, the inspections shall be performed using a tethered or parachuted floated or skid system. The Contractor shall notify the Engineer prior to the use of the floated or skid platform.

4. Minimum requirements of in-line inspection technologies for CCTV video inspection equipment shall be:

a. Equipment shall be capable of continuously capturing digital video with no frame loss, regardless of the progression of the inspection for the entire length being inspected.

b. Incorporate a suitable distance-reading device to measure the location of the equipment in the pipe, to an accuracy of ±0.5% of the length of the inspection.

c. An electronic footage counter shall accurately measure the distance of the CCTV inspection equipment from the centerline of the starting access manway within +/- 2-ft. This measurement shall be displayed on the monitor and recorded on the video at all times. The importance of accurate distance measurements is emphasized.

B. LiDAR Inspection Equipment

1. “Light Detection and Ranging" or "Laser Imaging, Detection, and Ranging" (LiDAR) is a technique to determine the surface profile and internal condition of

pipelines and specifically delamination of linings and interior wall degradation using LiDAR on the entire circumference above fluid level of the pipe.

2. LiDAR scanning equipment shall provide an accurate determination of pipe geometry (features and defects) above the fluid level.

3. Minimum equipment requirements are:

   a. The provision of LiDAR scanning data will be used to quantify internal pipe wall material loss (degradation) or joint condition (missing mortar) at a given location (defect). Although deformation (ovality and deflection) can be determined from LiDAR scanning, the primary focus will be to assess, map and quantify wall material loss and joint condition.

   b. LiDAR equipment shall be moved through the pipeline on a transport vehicle capable of supporting the LiDAR inspection equipment above the water level.

   c. Distance resolution (wall loss accuracy) of ± 1/50 inch up to 4 ft and ±1% more than 4 ft.

C. DIGITAL VISUAL CCTV RECORDING

1. Take continuous digital video recordings of the inspection view as it appears on the television monitor. The recording shall be used as a permanent record of defects. The recording shall be in MPEG file format. The digital video encoding shall include both sound and video information that can be reproduced with a video image equal or very close to the quality of the original picture on the television monitor. The replay of the recorded video information, when reviewed by the appropriate MPEG 2/4 viewing software, shall be free of electrical interference and shall produce a clear, stable image.

2. Create separate MPEG files for each pipeline segment. MPEG files shall be written to 2.5 inch portable hard disk drives (HDD) for delivery to the Engineer. Multiple MPEGs may exist on each HDD. Each HDD folder shall be labeled, at a minimum, with the following information: Project Name, Date and time of inspection, pipe segment ID, access manway IDs, Direction of survey, Current distance along reach (counter footage), and TV Inspection Contractor's firm name.

3. Digital video still frame captures of minimum 1024 x 768 x 24 bit JPEG shall be logged for every observation. Photographs shall be clear and accurately show the observation. Photographs shall have the following annotation: Upstream and downstream access manway ID, survey direction, footage, time and date, description. Name photos as follows: [Asset ID]_[Upstream Access Manway ID-Downstream Access Manway ID]_[HHMM_YYYYMMDD]_[Code]_[Footage].jpg

4. The Engineer reserves the right to refuse an MPEG on the basis of poor image quality, excessive bit rates, inconsistent frame rates, or any other characteristics that may affect usability by the Engineer.

5. All HDD's shall be sized appropriately to accommodate all above mentioned files and have dual USB 3.0 (preferable) and (a minimum) USB 2.0 compatibility with a minimum data transfer rate of 480 MB/s.

PART 3 - EXECUTION

3.01 GENERAL REQUIREMENTS:

A. Perform work within the conduit at humidity conditions suitable for pipe HD CCTV and LiDAR inspection in accordance with the equipment manufacturer's recommendations.

B. Coordinate HD CCTV and LiDAR inspection with other work being performed.

C. Carry out inspection along the entire length of the 42-inch diameter raw water conveyance pipeline.

3.02 HD CCTV AND LIDAR INSPECTION

A. Pre-repair Inspection and Preparation:

1. Visually inspect the conduit for defects that may impact the inspection equipment as it is being moved through the conduit.

B. Post-repair Inspection and Preparation:

1. Visually inspect the conduit for construction debris that may impact the inspection equipment as it is being moved through the conduit.

C. Inspections:

1. Notify the Engineer of the locations where inspections will be performed one full day before starting inspection work at that location.

2. Ensure the following during inspections:

a. The entire cross section of the pipe is visible and no debris is present during the pipe inspection.

b. Evacuate fog from the pipeline before beginning inspections and keep the pipeline clear of fog during the entire inspection.

c. Keep the camera lens clean during the entire pipe inspection.

d. Ensure the picture is in focus and there is adequate, even lighting free of shadows and glare ahead of the pipe at all times to be able to determine general condition, features and upcoming defects. Provide better lighting as directed by the Engineer.

3. Perform inspections in accordance with the following:

a. Begin inspections generally at the upstream access manway and proceed downstream in a consecutive manner.

b. Stop the camera and position to provide a steady 2 second perpendicular view of joints, taps (i.e., blow-offs and air-release valves), major defects and repairs including displaced joints, missing joint mortar, open joints, structural cracks, and concrete core degradation.

c. Incomplete inspections shall be communicated to the Engineer, indicating the date and time of the attempt, reasoning, efforts and actions set out.

d. Water infiltration observations shall be communicated to the Engineer, providing pipe or joint number, location, date and time of the observation, description with attached screen captures.

D. Inspection Records:

1. Provide the Engineer with the following HD CCTV and LiDAR inspection reports (whether combined or issued separately) prepared in accordance with these specifications

a. Pre-repair inspection report.

b. Post-repair inspection report.

2. The Contractor shall submit a draft report to the Engineer within three weeks of the inspection.

a. Discussion of the inspection data, identification and discussion of all leak and air pocket signals, and any anomalies.

b. The Owner will have two weeks to review and comment on the Draft Report.

c. Within two weeks of receipt of any comments from the Owner, the Contractor shall submit an electronic copy of the Final Report which addresses any comments or questions from the Engineer.

3. The LiDAR Report shall include the following information:

a. Summaries of pipe wall degradation and pipe joint condition (missing mortar) presented as unrolled color-coded full-circumference graphical illustrations of pipe condition, over the length of the pipeline inspected.

b. Cross-sectional scans, taken at defect areas (wall degradation) along the inspected pipeline, showing measured pipe cross section superimposed over as-built pipe cross section, and color highlighted to identify all areas of apparent cross-section loss.

c. All raw and post processed LiDAR data shall be submitted with associated and compiled reports that shall determine pipe geometry for features including but not limited to wall degradation, joint condition and pipe shape.

END OF SECTION

SECTION 02623

PVC PRESSURE PIPE

PART 1 - GENERAL

1.01 DESCRIPTION:

A. Provide and test polyvinylchloride (PVC) pressure pipe as indicated and specified.

1.02 REFERENCES:

A. American Water Works Association (AWWA):

1. C900: Polyvinylchloride (PVC) Pressure Pipe.

2. C905: Polyvinylchloride (PVC) Pressure Pipe

B. American Society for Testing and Materials (ASTM) Publications:

1. D-2241: Specification for Polyvinylchloride (PVC) Pressure-Rated Pipe (SDR-Series).

2. D-1784: Specification for Rigid Polyvinylchloride (PVC) Compounds and Chlorinated Polyvinylchloride (CPVC) Compounds.

3. D-1785: Specification for Polyvinylchloride (PVC) Plastic Pipe, Schedules 40, 80 and 120.

4. D-2672: Specification for Joints for IPS PVC Pipe Using Solvent Cement.

5. D-2855: Practice for Making Solvent-Cemented Joints with Poly(vinylchloride) (PVC) Pipe and Fittings.

6. F-402: Standard Practice for Safe Handling of Solvent Cements and Primers Used for Joining Thermoplastic Pipe and Fittings.

7. D1599 Test Method for Short-Time Hydraulic Failure Pressure of Plastic Pipe, Tubing, and Fittings

1.03 SUBMITTALS:

A. Submit the following in accordance with Section 01300:

1. Shop drawings and descriptive literature showing pipe dimensions, joints, joint gaskets, pipe stiffness, fittings, special fittings and other details for each size of pipe indicated.

2. Detailed layout, spool or fabrication drawings showing pipe spools, spacers, adapters, connectors, fittings and pipe supports.

3. Gasket and pipe manufacturer's printed joint assembly directions.

4. Certification with each delivery that pipe complies to this specification.

5. Manufacturer’s product data and samples of all materials.

6. Test Reports for:

   a. Hydrostatic proof testing

   b. Sustaining pressure testing

   c. Burst strength testing

7. Certified copies of test reports with each delivery, stating compliance with ASTM 1784, ASTM 1785, ASTM 2672, AWWA C900 and C905 for pipe and fittings.

1.04 QUALITY ASSURANCE:

A. Provide in accordance with Section 01400 and as specified.

B. Provide labor to assist the Engineer in inspecting pipe upon delivery. Remove rejected pipe immediately.

C. Reject pipe of any manufacturer if more than five unsatisfactory joint assembly operations or "bell breaks" occur in 100 consecutive joints, even if the pipe conforms to ASTM Specifications. Remove unsatisfactory pipe of that manufacturer of same shipment from work site. Furnish pipe of another manufacturer conforming to these specifications.

D. Perform tests in accordance with methods prescribed by ASTM and AWWA specifications. Accept or reject based on the test results.

E. PVC pipe, fittings and couplings shall bear indelible identification markings as required by ANSI/AWWA C900 and C905.

F. All pipe and fittings must be NSF 61 approved

1.05 DELIVERY, STORAGE AND HANDLING:

A. Provide in accordance with Section 01610 and as specified.

PART 2 - PRODUCTS

2.01 PIPE, FITTINGS, AND SPECIALS:

A. 3-in. or smaller:

1. Conform to ASTM D 1785 or ASTM D2241.

2. Material: PVC Class 12454-B, virgin compound, per ASTM D1784 with an established hydrostatic design basis (HDB) rating of 4000 psi for water at 73.4 deg. F (23 deg. C) designated PVC 1120.

3. Pipe: ASTM D1784, Schedule 80, or ASTM D2441, SDR 17 unless otherwise indicated or specified.

4. Fittings: Of same material and classification as pipe.

2.02 JOINTS:

A. 3-in. or smaller: Solvent-cement, with sockets (bells) per ASTM D2672, or push-on type per ASTM D3139.

1. Threaded joints are not acceptable.

PART 3 - EXECUTION

3.01 INSPECTION:

A. Examine excavation before pipe placement to ensure:

1. Excavation is complete to elevations and slopes indicated.

2. No obstruction exists to interfere with installation.

3. Bottom is firm and dry.

B. Inspect each pipe length and each fitting before installation. Remove defective pipe and fittings. Replace with sound pipe and fittings.

3.02 HANDLING:

A. Store until installation in a place acceptable to Engineer; keep place at ambient outdoor temperature.

1. Provide temporary shading.

2. Do not use covering causing temperature build-up.

B. Handle into position to avoid damage in a manner acceptable to Engineer.

3.03 INSTALLATION:

A. Do not install non-straight pipe.

1. Do not allow pipe centerline to deviate from straight line drawn between ends, by more than 1/16 in. per ft. of length.

2. Remove pipe failing to meet above requirement.

B. Support pipe on compacted screened gravel conforming to Section 02223. Do not permanently support on saddles, blocking or stones.

C. Excavate bell and coupling holes so that only pipe barrel receives bearing pressure.

D. Clear pipe units of debris and dirt before installation and keep clean until acceptance.

E. Install to lines and grades indicated or required by Engineer.

F. Make solvent-cement joints in accordance with ASTM D2855. Observe precautions per ASTM F402.

G. Close open ends of pipe and branches with PVC stoppers secured in place.

H. Make open ends of pipe and branches watertight with temporary plugs when pipe installation not in progress.

I. Cleaning:

1. Prevent earth, water, and other material from entering pipeline.

2. Clean pipeline upon completion.

3.04 TESTING:

A. Clean pipe of dirt, dust, oil, grease and other foreign material, before pressure and leakage tests.

B. Pressure and Leakage Tests:

1. Conduct combined pressure and leakage test for pressure pipe:

a. Upon completion of isolated sections.

2. Furnish and install temporary testing plugs or caps, pressure pumps, pipe connections, meters, gages, equipment, and labor.

3. Test when desired; comply with Engineer's orders and specifications.

4. Fill section of pipe with water and expel air. If blowoffs not available at high points for releasing air, make necessary taps and plug after test completion.

5. Maintain section full of water for 24 hours before conducting combined pressure and leakage test.

6. When conducting pressure and leakage test, first raise water pressure (based on elevation of lowest point of section under test and corrected to gage location) to pressure in psi numerically equal to pipe pressure rating, but not more than 150 psi.

C. Maintain pressure and make leakage test by metering water flow into pipe:

1. Acceptable result:

a. No visible leakage in joints.

2. If section fails pressure and leakage test, locate, uncover, and repair or replace defective pipe, fittings, or joint, at no additional expense and without time extension. Conduct additional tests and repairs until section passes test.

3. Modify test procedure only if permitted by Engineer.

3.05 CONTRACT CLOSEOUT:

A. Provide in accordance with Section 01700.

END OF SECTION

SECTION 02740

BITUMINOUS PAVEMENT

PART 1 - GENERAL

1.01 DESCRIPTION:

A. Remove and replace permanent gravel base and pavement as indicated on drawings, as specified and where damaged by Contractor's operations.

B. Place, maintain and remove temporary pavement as indicated on drawings, as specified, and as directed by the Engineer.

C. Place and maintain permanent trench binder as indicated on drawings, as specified and as directed by Engineer.

D. Place and maintain permanent trench top course over the permanent trench binder as indicated on the drawings, as specified and as directed by the Engineer.

E. Definitions

1. Degree of compaction: Degree of compaction is expressed as a percentage of the maximum density obtained by the test procedure presented in ASTM D 1557.

2. Subgrade: Existing or backfilled surface on which the base course are placed.

1.02 RELATED WORK:

A. Section 01063: Miscellaneous Requirements

B. Section 01710: Cleaning Up

C. Section 02210: Earth Excavation, Backfill, Fill and Grading

D. Section 02317: Granular Materials

1.03 REFERENCES:

A. Latest edition of the Standard Specification for Highways and Bridges, Commonwealth of Massachusetts, Department of Public Works, 1988 as amended and supplemented. (Herein referred to as Massachusetts Standard Specifications or Standard Specifications.)

1. Section 460: Class I Bituminous Concrete Pavement - Type I-1.

2. Materials Specifications:

    a. M1.03.1: Processed Gravel for Subbase.

    b. M3.03.0: Asphalt Emulsions.

    c. M3.11.00: Class I Bituminous Concrete and Tack Coat.

    d. M3.12.0: Bituminous Concrete Curb.

    e. M4.02.00: Cement Concrete Curb.

3. Section 401: Gravel Sub-base.

4. Section 405: Gravel Base Course.

5. Section 460: Class I Bituminous Concrete Pavement Type I-1.

6. Section 501: Curb, Curb Inlets, Curb Corners and Edging.

B. Current version of American Society for Testing and Materials (ASTM) Publications:

1. C136: Sieve Analysis of Fine and Coarse Aggregates.

2. D75: Sampling Aggregates.

3. D1140: Amount of Materials in Soils Finer Than the No. 200 Sieve.

4. D1556: Density and Unit Weight of Soil in Place by the Sand-Cone.

5. D1557: Laboratory Compaction Characteristics of Soil Using Modified Effort.

6. D2172: Quantitative Extraction of Bitumen from Bituminous Paving Mixtures.

7. D2726: Bulk Specific Gravity and Density of Compacted Bituminous Mixtures Using Saturated Surface - Dry Specimens.

8. D2922: Density of Soil and Aggregate in Place by Nuclear Methods (Shallow Depth).

9. D3071: Water Content of Soil and Rock in Place by Nuclear Methods (Shallow Depth).

10. D3405: Joint Sealants, Hot-poured, for Concrete and Asphalt Pavements.

1.04 QUALITY ASSURANCE:

A. Comply with Massachusetts Highway Department Standards listed in Paragraph 1.03, unless otherwise specified or indicated.

B. Engineer reserves the right to inspect at any time, the plant producing the paving material for plant conditions and operations, adequacy of equipment, accuracy of scales, temperature, character and proportions of the mixture, aggregates and bitumen and related production procedures.

C. Weather Limitations:

1. Conform to Massachusetts Highway Department Standards M3.11.03 for bituminous course.

2. Do not construct base course, or subgrade when ambient air temperature is 35 deg. F and falling.

D. Employ and pay for an independent testing laboratory to test the subgrade, base course, binder and surface conditions for grade and smoothness.

E. Employ and pay for an independent testing laboratory to perform the following in-place density tests by nuclear meter method in accordance with ASTM D2922 and ASTM D3017.

1.	Subgrade B Roadways	50 lineal feet
2.	Subgrade - Parking Areas and Driveways	3500 sq. feet
3.	Base Course B Roadways	50 lineal feet
4.	Base Course - Parking Areas and Driveways	3500 sq. feet
5.	Binder and Surface Courses B Roadways	50 lineal feet
6.	Binder and Surface Courses - Parking Areas and Driveways	3500 sq. feet

F. The Contractor's independent testing laboratory shall perform the following additional tests:

1. Moisture-density relations and grain size analysis of subbase base course material in accordance with ASTM D1557, and ASTM C136 and D1140.

G. Laboratory testing and the report of test results shall be less than six months old at the time of submittal.

H. Permanent pavement shall not be placed from December 1 to April 1.

1.05 SUBMITTALS:

A. Submit the following prior to placing base course, tack coat or bituminous mixtures.

1. Certification that plant supplying paving material will comply with Massachusetts Highway Department Standards.

2. Batch plant slips with each load of bituminous mixture stating the weight delivered, the mix proportions by weight, and the mix and asphalt cement temperature at the time of batching.

3. Test results from an independent testing laboratory certifying that subgrade, base and bituminous mixture aggregates comply with MHD standard specifications.

4. Test certificates from the Supplier indicating that asphalt cement and tack coat materials comply with specifications.

5. Test results from an independent testing laboratory indicating that bituminous mixtures comply with specifications, signed by an officer of bituminous mixture Supplier.

6. Schedule of construction for roadways.

7. Particle-size distribution and moisture-density relations of the processed gravel base and subbase courses tested in accordance with ASTM C136, ASTM D1140 and ASTM D1557.

1.06 DELIVERY, STORAGE, AND HANDLING OF BITUMINOUS MATERIALS:

A. Transport and deliver hot mix bituminous concrete in accordance with Massachusetts Highway Department Standards Section 460. Do not use diesel fuel as a lubricant.

B. Transport and distribute tack coat in a bituminous distributor having pneumatic tires and equipped to spray bituminous emulsion material in a uniform coverage at the rate and temperature specified within a tolerance of 5 percent. The distributor shall include a separate power unit for the bitumen pump, full circulation spray bars, tachometer,

pressure gages, volume measuring devices, heaters that shall achieve and maintain the specified temperature prior to and during the tack coat application, thermometer for reading the tank contents, and a hand hose attachment for applying tack coat manually to areas in accessible to the distributor spray bars. The distributor shall be equipped to circulate and agitate the bituminous material during the heating process.

1.07 SAFETY:

A. Contractor responsible for ensuring public safety.

PART 2 - PRODUCTS

2.01 GENERAL:

A. Provide hot bituminous concrete paving material in accordance with MHD Standard Specification M3.11.00 binder course and top course for surface course. Use AC-20 grade asphalt cement unless otherwise authorized.

B. Provide tack coat consisting of emulsified asphalt grade RS-1 conforming to MHD Standard Specification M3.03.0.

C. Provide gravel base course material as specified in MHD Standard Specification M1.03.1 for roadways, parking areas and driveways.

2.02 GRAVEL SURFACE:

A. Provide in accordance with referenced Sections of Massachusetts Standard Specifications.

PART 3 - EXECUTION

3.01 GENERAL:

A. Plants preparing paving material to be satisfactory to Engineer.

B. Except as otherwise indicated, specified, or approved by the Engineer, all bituminous concrete conforming to Class I Bituminous Concrete Pavement, Type I-1, Section 460 Massachusetts Standard Specifications.

C. Thickness' indicated, specified, or directed by Engineer where compaction required are thickness' after compaction is completed satisfactorily.

D. Base courses of specified types are part of pavement construction.

E. Pavement to be removed, cut prior to removal in longest straight lines possible on both sides of the proposed trench for entire length of job by pneumatic cutter or equivalent cutting device approved by Engineer.

F. All backfill and fill to be compacted in accordance with Section 02210 prior to placing pavement over it.

G. Manhole covers, catchbasin grates, valve and meter boxes, curbs, walks and walls to be adequately protected and left in clean condition.

H. Adjust manhole covers, catchbasin grates, valve boxes and similar items to conform with pavement grade or as directed by Engineer.

I. Maintain surfaces of compacted gravel base course until pavement is placed.

J. Disturbed or eroded gravel base course to be restored as required before placing new pavement.

K. Surfaces of existing pavement on which new pavement to be placed swept clear to satisfaction of Engineer prior to placing new pavement.

L. Until the expiration of the guarantee period, maintain surfacing placed under this contract and promptly correct any defect such as cracks, depressions, and holes that may occur. Surfacing kept in a safe and satisfactory condition for traffic. If defects occur in surfacing constructed by Contractor, remove bituminous concrete and base course as is necessary to properly correct defect. Replace base course and bituminous concrete as specified.

M. The Contractor shall provide a representative who will be available on a twenty-four hour per day basis to receive and act on problems related to maintenance of paving. Within one hour of notification by the City, the Contractor shall have labor, materials, and equipment on site to provide for pedestrian and vehicle safety and commence installing a temporary repair. Within twelve hours the Contractor shall restore the area to proper contract status.

N. The length of unpaved pipeline trench shall not exceed 1000 feet at any time.

3.02 GRAVEL BASE COURSE:

A. Prior to placement of base course proof-roll the subgrade with a compactor to achieve a near surface density of 95%.

B. Gravel base course to conform with Section 405, Massachusetts Standard Specifications.

C. Compacted to 95 percent.

D. Gravel base course shall be a minimum depth of 12 inches, as measured after compaction, for sewer line and service connection trenches and depth of 8 inches for sidewalks and driveways.

E. The top of the gravel base course is to be below the finished grade a distance equal to the thickness of the permanent pavement to be placed on the gravel base course, unless directed otherwise by the Engineer.

3.03 TEMPORARY PAVEMENT:

A. Prior to placing pavement, backfill shall be compacted as required under Section 02210 to eliminate settling of backfill. No pavement shall be placed over poorly compacted backfill or gravel base.

B. Temporary pavement shall be placed over trenches as soon as practical after completion of pipe laying operations in each roadway or as directed by Engineer.

C. Backfill and base course shall be compacted, brought to proper elevation, and dressed so that temporary pavement construction matches existing grade. Maintain surfaces of excavated and disturbed areas until pavement is placed. If there is a time lapse of more than 24 hours between completion of preparation of subgrading or placing of base course and placing of pavement, or if subgrade or base course has been eroded or disturbed by traffic, restore to acceptable condition before placing pavement.

D. Place on previously prepared gravel base course where indicated and directed by the Engineer.

E. Temporary Pavement in Driveways and Streets: The pavement shall consist of 3-inches compacted bituminous base course conforming to Standard Specifications Section 460, Class I Bituminous Concrete Pavement, Type I.

F. Place and maintain temporary pavement in safe and reasonably smooth condition until permanent pavement is placed. Temporary pavement to be placed on all paved areas, including driveways, at end of each day's activities. Manhole rims to be flush with temporary pavement grade until permanent pavement is placed.

G. Temporary pavement shall remain for a minimum of 90 days before replacing with permanent pavement unless directed otherwise by Engineer.

3.04 PREPARATION FOR PERMANENT TRENCH BINDER COURSE:

A. Place permanent trench binder course on previously prepared gravel base course.

B. In preparation for permanent trench binder course, Contractor shall remove temporary pavement, restore and recompact gravel base course to grade, and prepare existing permanent paving edges for bonding with new binder course.

C. At time of installing permanent trench binder course, edges of existing pavement to be cut back by a pneumatic cutter 12 in., or more as required, from the trench excavation wall or damaged area to sound undamaged material. Clear edges of original surfacing of dust and dirt and apply approved cut-back asphalt or RS-1 emulsified asphalt so that new pavement material is properly bonded in old.

D. Maintain binder course in safe and smooth condition until top course pavement is placed.

3.05 PREPARATION FOR PERMANENT TRENCH TOP COURSE:

A. Place permanent trench top course on previously prepared permanent trench binder course.

B. In preparation for permanent trench top course, Contractor to restore permanent trench binder course with leveling course, if required, and prepare existing permanent pavement for bonding with the new permanent pavement. Contractor is not to be compensated for leveling course used to restore permanent trench binder course.

C. Apply tack coat only when the surface to receive the tack coat is dry, the atmospheric temperature in the shade is 40 degrees F or above and when the temperature has not been below 35 degrees F for the 12 hours prior to application. Apply at the rate of 0.05 to 0.15 gallons per square yard as directed by the CM. Apply at a temperature between 70 and 140 degrees F. Provide certified waybills and delivery tickets during progress of the work. As a prelude to providing complete tack, tack 200 feet for the full width of the spray bar as a trial section to evaluate the amount of tack that can be satisfactorily applied. Tack the trial section at the rate of 0.05 gals per square yard unless otherwise directed by the Engineer. Blot up any excess tack coat with clean dry sand. Allow tack to obtain evaporation of moisture prior to paving.

3.06 PERMANENT TRENCH BINDER COURSE:

A. Materials and construction methods conform with Section 460, Class I Bituminous Concrete, Base Course, Type I-1, Massachusetts Standard Specification.

B. Placed on previously prepared gravel base course dressed and recompacted as appropriate.

C. Spread evenly with acceptable mechanical spreader.

D. To uniform grade and cross-section with smooth transition to existing pavement.

E. Thickness shall be 1-1/2 inches.

3.07 PERMANENT TRENCH TOP COURSE:

A. Materials and construction methods conform with Section 460, Class I Bituminous Concrete, Top Course, Type I-1, Massachusetts Standard Specification.

B. Placed on previously prepared permanent trench binder course treated with cut back or emulsified asphalt.

C. Spread evenly with acceptable mechanical spreader.

D. To uniform grade and cross-section with smooth transition to existing pavement.

E. Thickness shall be 1-1/2 inches.

3.08 GRAVEL SURFACED ROAD:

A. Materials and construction methods conform with Section 405 Gravel Base Course, Massachusetts Standard Specifications.

3.09 FIELD TESTING:

A. Measure thickness, grade, and smoothness of all courses placed in accordance with the Massachusetts Standard Specifications.

END OF SECTION

SECTION 02830

SEGMENTAL RETAINING WALLS

PART 1 - GENERAL

1.01 DESCRIPTION:

A. Provide segmental retaining walls as indicated and as required in compliance with Contract Documents.

1.02 REFERENCES:

A. Massachusetts State Building Code

B. MassDOT Standard Specifications for Roads and Bridge Construction

C. American Society for Testing and Materials International (ASTM):

1. C136: Standard Test Method for Sieve Analysis of Fine and Coarse Aggregates

2. C1372: Standard Specification for Dry-Cast Segmental Retaining Wall Units

3. D1557: Test Method for Laboratory Compaction Characteristics of Soil Using Modified Effort (56,000 ft-lb/ft^3 (2,700 kN-m/m^3)).

4. D2487: Standard Practice for Classification of Soils for Engineering Purposes (Unified Soil Classification System)

5. D4632: Standard Test Method for Grab Breaking Load and Elongation of Geotextiles

6. D4651: Standard Specification for Isobutene Thermophysical Property Tables

7. D4751: Standard Test Method for Determining Apparent Opening Size of a Geotextile

8. D5321: Standard Test Method for Determining the Coefficient of Soil-Geosynthetic or Geosynthetic- Geosynthetic Interfaces by the Direct Shear Method

9. D6638: Standard Test Method for Determining Connection Strength Between Geosynthetic Reinforcement and Segmental Concrete Units (Modular Concrete Blocks)

10. D6706: Standard Test Method for Measuring Geosynthetic Pullout Resistance in Soil

11. D6916: Standard Test Method for Determining the Shear Strength Between Segmental Concrete Units (Modular Concrete Blocks)

12. E329: Standard Specification for Agencies Engaged in Construction Inspection and/or Testing

D. National Concrete Masonry Association (NCMA):

1. TR127B: Design Manual for Segmental Retaining Walls

2. TR146: Segmental Retaining Wall Installation Guide

3. TR146: Segmental Retaining Walls – Seismic Design Manual

1.03 PERFORMANCE REQUIREMENTS:

A. Design segmental retaining walls, including comprehensive engineering analysis by a qualified and licensed professional engineer in the State of Massachusetts, using performance requirements and design criteria as specified and as indicated.

B. Structural Performance: Engineering design shall be based on:

1. Gravity loads due to soil pressures resulting from grades and sloped backfill indicated.

2. Surcharge loads at the top of the walls, traffic and other applicable surcharge loads at the toe of the walls, as required.

C. Seismic Performance: Engineering design shall be based on the following loads and factors.

1. Gravity loads due to soil pressures resulting from grades indicated.

2. Applicable surcharge loads on top of the walls, as required.

3. Utilize Massachusetts Building Code, Site Class D requirements for seismic design.

1.04 PRECONSTRUCTION TESTING:

A. Preconstruction Testing Service: Engage a qualified testing agency to perform the following preconstruction testing:

1. Test soil reinforcement and backfill materials for pullout resistance according to ASTM D6706.

2. Test soil reinforcement and backfill materials for coefficient of friction according to ASTM D5321.

1.05 SUBMITTALS:

A. Submit the following shop drawings in accordance with Section 01300.

B. Product Data: For each type of product indicated.

C. Samples for Initial Selection: For concrete units.

D. Samples for Verification: For each color and texture of concrete unit required.

1. Include one full-size unit for each type of concrete unit required.

E. Design Submittal: Submit Certificate of Delegated Design Services in Section 01300 stamped and signed by a registered professional engineer licensed in the State of Massachusetts.

1. Compliance Review: Qualified professional engineer responsible for segmental retaining wall design shall review and approve submittals and source and field quality-control reports for compliance of materials and construction with design.

F. Qualification Data: For qualified licensed professional engineer and testing agency.

G. Product Certificates: For segmental retaining wall units and soil reinforcement, from manufacturer.

1. Include test data for shear strength between segmental retaining wall units according to ASTM D6916.

2. Include test data for connection strength between segmental retaining wall units and soil reinforcement according to ASTM D6638.

H. Product Test Reports: Based on evaluation of comprehensive tests performed by a qualified testing agency, for segmental retaining wall units and soil reinforcement.

1. Include test data for freeze-thaw durability of segmental retaining wall units.

2. Include test data for shear strength between segmental retaining wall units according to ASTM D6916.

3. Include test data for connection strength between segmental retaining wall units and soil reinforcement according to ASTM D6638.

I. Preconstruction test reports.

J. Source quality-control reports.

K. Field quality-control reports.

1.06 QUALITY ASSURANCE:

A. Comply with the requirements specified in Section 01400.

B. Prepare design, including calculations and drawings, under the direction of a Professional Engineer licensed in the State of Massachusetts and having the following qualifications:

1. Not less than ten (10) years experience in the design of segmental retaining wall systems.

2. Completed not less than five (5) successful segmental retaining wall systems for projects of equal type.

C. Testing Agency Qualifications: Qualified according to ASTM E329 for testing indicated.

1.07 DELIVERY STORAGE AND HANDLING:

A. Comply with the requirements specified in Section 01610.

B. Store and handle concrete units and accessories to prevent deterioration or damage due to contaminants, breaking, chipping, or other causes.

C. Store geosynthetics in manufacturer's original packaging with labels intact. Store and handle geosynthetics to prevent deterioration or damage due to sunlight, chemicals, flames, temperatures above 160 degrees F (71 degrees C) or below 32 degrees F (0 degrees C), and other conditions that might damage them. Verify identification of geosynthetics before using and examine them for defects as material is placed.

PART 2 - PRODUCTS

2.01 SEGMENTAL RETAINING WALL UNITS:

A. Concrete Units: ASTM C1372, Normal Weight, except that maximum water absorption shall not exceed 7 percent by weight and units shall not differ in height more than +/- 1/16 inch from specified dimension.

1. Manufacturers:

a. Allan Block Corporation.

b. Anchor Wall Systems, Inc.

c. GeoWestern, Inc.

d. ICD Corporation.

e. Keystone Retaining Wall Systems, Inc.; a Contech company.

f. Risi Stone Systems; a division of Rothbury International.

g. Rockwood Retaining Walls, Inc.

h. Tensar Earth Technologies, Inc.

i. Versa-Lok Retaining Wall Systems; a division of Kiltie Corporation.

j. Or equal.

2. Provide units that comply with requirements for freeze-thaw durability.

3. Provide units that interlock with courses above and below by means of integral lugs or lips, pins, or clips.

B. Color: As selected by Engineer from manufacturer's full range.

C. Shape and Texture: Provide units of any basic shape and dimensions that will produce segmental retaining walls of dimensions and profiles indicated without interfering with other elements of the Work and with machine-split textured exposed face.

D. Batter: Provide units that offset from course below to provide at least 1:24 batter.

E. Cap Units: Provide cap units of same shape as other units with smooth, as-cast top surfaces without holes or lugs.

F. Special Units: Provide corner units, end units, and other shapes as needed to produce segmental retaining walls of dimensions and profiles indicated and to provide texture on exposed surfaces matching face.

2.02 INSTALLATION MATERIALS:

A. Pins: Product supplied by segmental retaining wall unit manufacturer for use with units provided, made from nondegrading polymer reinforced with glass fibers.

B. Clips: Product supplied by segmental retaining wall unit manufacturer for use with units provided, made from nondegrading polymer reinforced with glass fibers.

C. Cap Adhesive: Product supplied or recommended by segmental retaining wall unit manufacturer for adhering cap units to units below.

D. Leveling Base: Lean concrete with a compressive strength of not more than 500 psi.

E. Drainage Fill: Comply with the Crushed Stone requirements of Section 02435.

F. Reinforced-Soil Fill: ASTM D2487; GW, GP, SW, SP, and SM soil classification groups or a combination of these groups; free of debris, waste, frozen materials, vegetation, and other deleterious matter; meeting the following gradation according to ASTM C136: 100 percent passing 3-inch, 20 to 100 percent passing No. 4 sieve, 0 to 60 percent passing No. 40 sieve, 0 to 35 percent passing No. 200 sieve, and with fine fraction having a plasticity index of less than 20.

G. Nonreinforced-Soil Fill: Comply with requirements in Section 02224 for satisfactory soils.

H. Impervious Fill: Inorganic soil with maximum particle size of 1 inches, more that 30 percent passing the standard No. 200 sieve, clay content more than 15 percent, liquid limit larger than 20 percent, and plasticity index larger than 7 percent. The fill shall be compacted in 6-inch lifts to 93 percent of the maximum dry density determined in accordance with ASTM D1557 and at a moisture content ranging from optimum to +3 percent.

I. Drainage Geotextile: Nonwoven needle-punched geotextile, manufactured for subsurface drainage applications, made from polyolefins or polyesters; with elongation greater than 50 percent.

1. Apparent Opening Size: No. 70 to 100 sieve, maximum; ASTM D4751.

2. Minimum Grab Tensile Strength: 110 pounds; ASTM D4632.

3. Minimum Weight: 4 ounces/square yard.

J. Subdrainage Pipe: Provide subdrainage pipe for hydrostatic pressure relief if required by the Wall Designer.

K. Soil Reinforcement: Product specifically manufactured for use as soil reinforcement and as follows:

1. Manufacturers:

a. Colbond Inc.

b. Huesker, Inc.

c. Luckenhaus Technical Textiles, Inc.

d. Mirafi Construction Products; Ten Cate Nicolon.

e. Propex Fabrics Inc.; Civil Engineering Fabrics.

f. Strata Systems, Inc.

g. Synteen Technical Fabrics, Inc.

h. Tenax Corporation; Subsidiary of Tenax Group.

i. Tensar Earth Technologies, Inc.

j. Versa-Lok Retaining Wall Systems; a division of Kiltie Corporation.

k. Webtec, Inc.

l. Or equal.

2.03 SOURCE QUALITY CONTROL:

A. Direct manufacturer to test and inspect each roll of soil reinforcement at the factory for minimum average roll values for geosynthetic index property tests, including the following:

1. Weight.

2. Roll size.

3. Grab or single-rib strength.

4. Aperture opening.

5. Rib or yarn size.

PART 3 - EXECUTION

3.01 EXAMINATION:

A. Examine areas and conditions, with Installer present, for compliance with requirements for excavation tolerances, condition of subgrades, and other conditions affecting short-term and long-term performance of segmental retaining walls.

B. Proceed with installation only after unsatisfactory conditions have been corrected.

3.02 RETAINING WALL INSTALLATION:

A. General: Place units according to NCMA's "Segmental Retaining Wall Installation Guide" and segmental retaining wall unit manufacturer's written instructions.

1. Lay units in running bond.

2. Form corners and ends by using special units.

B. Leveling Base: Place and compact base material to thickness indicated and with not less than 95 percent maximum dry unit weight according to ASTM D1557.

1. Leveling Course: At Contractor's option, unreinforced lean concrete may be substituted for upper 1 to 2 inches of base. Compact and screed concrete to a smooth, level surface.

C. First Course: Place first course of segmental retaining wall units for full length of wall. Place units in firm contact with each other, properly aligned and level.

1. Tamp units into leveling base as necessary to bring tops of units into a level plane.

D. Subsequent Courses: Remove excess fill and debris from tops of units in course below. Place units in firm contact, properly aligned, and directly on course below.

1. For units with lugs designed to fit into holes in adjacent units, lay units so lugs are accurately aligned with holes, and bedding surfaces are firmly seated on beds of units below.

2. For units with lips at front of units, slide units as far forward as possible for firm contact with lips of units below.

3. For units with lips at bottom rear of units, slide units as far forward as possible for firm contact of lips with units below.

4. For units with pins, install pins and align units.

5. For units with clips, install clips and align units.

E. Cap Units: Place cap units and secure with cap adhesive.

3.03 FILL PLACEMENT:

A. General: Comply with requirements in segmental retaining wall unit manufacturer's written instructions.

B. Fill voids between and within units with drainage fill. Place fill as each course of units is laid.

C. Place, spread, and compact drainage fill and soil fill in uniform lifts for full width and length of embankment as wall is laid. Place and compact fills without disturbing alignment of units. Where both sides of wall are indicated to be filled, place fills on both sides at same time. Begin at wall and place and spread fills toward embankment.

1. Use only hand-operated compaction equipment within 48 inches of wall, or one-half of height above bottom of wall, whichever is greater.

2. Compact reinforced-soil fill to not less than 93 percent maximum dry unit weight according to ASTM D1557.

a. In areas where only hand-operated compaction equipment is allowed, compact fills to not less than 93 percent maximum dry unit weight according to ASTM D1557.

b. In areas where fill height exceeds 15 feet compact reinforced-soil fill that will be more than 15 feet below finished grade to not less than 95 percent maximum dry unit weight according to ASTM D1557.

c. In areas where fill height exceeds 30 feet compact reinforced-soil fill that will be more than 30 feet below finished grade to not less than 100 percent maximum dry unit weight according to ASTM D1557.

D. Place a layer of drainage fill at least 18 inches wide behind wall to within 12 inches of finished grade. Place a layer of drainage geotextile between drainage fill and soil fill.

E. Place impervious fill over top edge of drainage fill layer.

F. Slope grade at top of wall away from wall unless otherwise indicated. Slope grade at base of wall away from wall. Provide uniform slopes that will prevent ponding.

G. Place soil reinforcement in horizontal joints of retaining wall where indicated and according to soil-reinforcement manufacturer's written instructions. Embed reinforcement a minimum of 8 inches into retaining wall and stretch tight over compacted backfill. Anchor soil reinforcement before placing fill.

1. Place additional soil reinforcement at corners and curved walls to provide continuous reinforcement.

2. Place geosynthetics with seams, if any, oriented perpendicular to segmental retaining walls.

3. Do not dump fill material directly from trucks onto geosynthetics.

4. Place at least 6 inches of fill over reinforcement before compacting with tracked vehicles or 4 inches before compacting with rubber-tired vehicles.

5. Do not turn vehicles on fill until first layer of fill is compacted and second layer is placed over each soil-reinforcement layer.

3.04 CONSTRUCTION TOLERANCES:

A. Variation from Level: For bed-joint lines along walls, do not exceed 1 1/4 inches in 10 feet, 3 inches maximum.

B. Variation from Indicated Batter: For slope of wall face, do not vary from indicated slope by more than 1 1/4 inches in 10 feet.

C. Variation from Indicated Wall Line: For walls indicated as straight, do not vary from straight line by more than 1 1/4 inches in 10 feet.

3.05 FIELD QUALITY CONTROL:

A. Testing Agency: Engage a qualified testing agency to perform tests and inspections.

B. Comply with requirements below:

1. In each compacted backfill layer, perform at least 1 field in-place compaction test for each 24 inches of fill depth and each 50 feet or less of segmental retaining wall length.

3.06 ADJUSTING:

A. Remove and replace segmental retaining wall construction of the following descriptions:

1. Broken, chipped, stained, or otherwise damaged units. Units may be repaired if Engineer approves methods and results.

2. Segmental retaining walls that do not match approved Samples.

3. Segmental retaining walls that do not comply with other requirements indicated.

B. Replace units so segmental retaining wall matches approved Samples and mockups, complies with other requirements, and shows no evidence of replacement.

3.07 CLOSEOUT ACTIVITIES:

A. Provide in accordance with Section 01700.

END OF SECTION

SECTION 03100

CONCRETE FORMWORK

PART 1 - GENERAL

1.01 DESCRIPTION:

A. Provide design and furnish materials for fabricating, erecting and removing formwork, false work and shoring for cast-in-place concrete as shown on the contract drawings and specified herein for a complete installation. The use of stay-in-place forms is expressly prohibited.

B. Use formwork to cast all cast-in-place concrete structures.

C. Provide and remove all formwork for architectural, civil, mechanical, and electrical work as shown on the drawings or specified under specified under those disciplines.

1.02 REFERENCES:

A. American Concrete Institute (ACI):

1. 117/117R: Standard Tolerances for Concrete Construction and Materials.

2. 309.2R: Identification and Control of Visible Effects of Consolidation on Formed Concrete Surfaces.

3. 318/318R: Building Code Requirements for Structural Concrete and Commentary.

4. 347: Guide to Formwork for Concrete.

5. 350/350R: Code Requirements for Environmental Concrete Structures and Commentary.

B. National Sanitation Foundation (NSF):

1. 61: Drinking Water System Components – Health Effects

C. Engineered Wood Association (APA)

D. National Institute of. Product Standards and Technology

1. Voluntary Product Standard PS 1 Structural Plywood

1.03 DESIGN REQUIREMENTS:

A. Design formwork in conformance with methodology of ACI 347R for anticipated loads, lateral pressures, depth of concrete placement and rate of concrete placement. Design

shall consider any special requirements due to the use of self-consolidating, plasticized and/or retarded set concrete. All forms and shoring shall be designed at the contractor's expense.

1.04 QUALIFICATIONS:

A. Formwork Designer: Formwork, false work, and shoring design shall be by an engineer licensed in the state where the Project is located.

1.05 SUBMITTALS:

A. Submit product data for form ties, spreaders, chamfer strips, rustication strips, form liners, form coatings, and bond breakers.

B. Submit following shop drawings in accordance with 01300.

1. Layout of panel joints and tie hole pattern for architectural formwork.

2. Form Ties: Submit data sheets for form ties proposed for use.

3. Form Ties-Tapered Through-Bolts: Proposed method of sealing and patching form tie holes.

4. ANSI/NSF 61 Certification that form release agents proposed for use in structures to contain potable water are non-toxic and have no adverse effect on the quality or appearance of potable water.

1.06 QUALITY ASSURANCE:

A. Comply with requirements in section 01400 and as specified.

B. Design of Formwork:

1. The Contractor shall assume responsibility for the design, engineering and construction of formwork. Forms shall be designed to produce concrete members identical in shape, lines and dimensions to members shown on the Contract Documents.

2. When high range water reducer (superplasticizer) is used in concrete mix or when self-consolidated concrete is specified, forms shall be designed for full hydrostatic pressure per ACI 347.

3. The formwork shall be designed for the loads and lateral pressures in accordance with ACI 347 and wind loads as specified by the local building code.

4. Construction and contraction joints, openings, offsets, keyways, recesses, moldings, chamfers, blocking, screeds, bulkheads, waterstops, anchorages, inserts, and other features shall be provided.

5. Formwork shall be designed to be readily removable without impact, shock, or damage to 'green' concrete surfaces and adjacent materials.

6. The maximum panel deflection shall be L/360 of the span between structural members.

C. Unless otherwise specified herein, formwork shall be constructed so that the concrete surfaces will conform to the tolerance limits as given in ACI 117.

D. Materials, fabrications and workmanship found defective shall be promptly removed and replaced and new acceptable work shall be provided in accordance with Contract requirements at no additional cost to the owner.

1.07 DELIVERY, STORAGE AND HANDLING:

A. Comply with the requirements in section 01610.

B. Materials shall be delivered to the site in an undamaged condition and at such intervals as will avoid delay in the work.

C. Material shall be stored and protected in a clean, properly drained location. Material shall be kept off the ground under a weather-tight covering permitting good air circulation. Formwork materials shall be stored on dry wood sleepers, pallets, platforms or other appropriate supports which have slope for positive drainage. Materials shall be protected from distortion, excessive stresses, corrosion and other damage. Materials shall not be stored on the structure in a manner that might cause distortion or damage to the supporting structure.

PART 2 - PRODUCTS

2.01 LUMBER:

A. Lumber used in form construction shall be Douglas fir, No. 2 grade, S4S, Standard Grading and Dressing Rules No. 16, West Coast Lumber Inspection Bureau; or Southern Yellow Pine, No. 2, S4S, Standard Grade Rules Southern Pine Inspection Bureau. Boards shall be 6 inches or more in width.

2.02 PLYWOOD:

A. Only grade-marked plywood conforming to APA shall be provided.

B. Plywood used in form construction shall be Grade B-B, Class 1 plyform, mill-oiled, and sanded on both sides in conformance with U.S. Product Standard PS 1 Structural Plywood.

C. Thickness shall be sized to maintain alignment and surface smoothness, but not less than 5/8-inch thick.

2.03 STEEL FORMS:

A. Commercial grade sheets not less than 16 gage shall be provided.

B. Stock material that is free from warps, bends, kinks, cracks, and rust or other matter that could stain the concrete shall be provided.

2.04 FORM MATERIAL LOCATIONS:

A. Wall Forms and Underside of Slabs and Beams:

1. Materials: Plywood, hard plastic finished plywood or steel in new and undamaged condition, of sufficient strength and surface smoothness to produce specified finish.

B. Column Forms:

1. Rectangular Columns: As specified for walls.

2. Circular Columns: Fabricated steel or fiber reinforced plastic with bolted together sections or spirally wound laminated fiber form internally treated with release agent for height of column.

C. All Other Forms: Materials as specified for wall forms.

D. Rustication Grooves and Chamfer Strips: Nonabsorbent material, compatible with form surface, fully sealed on all sides prohibiting loss of paste or water between the two surfaces.

2.05 FORM TIES:

A. Locate form ties on exposed surfaces in a uniform pattern. Place form ties so they remain embedded in the concrete except for a removable portion at each end. Form ties shall have conical or spherical type inserts with a maximum diameter of 1 inch. Construct form ties so that no metal is within 1-1/2 inch of the concrete surface when the forms, inserts, and tie ends are removed. Do not use wire ties. Ties shall withstand all pressures and maintain forms within acceptable deflection limits.

B. Flat bar ties for panel forms shall have plastic or rubber inserts having a minimum depth of 1-1/2 inch and sufficient dimensions to permit patching of the tie hole.

C. Tapered form ties shall be tapered through-bolts or through-bolts that utilize a removable tapered sleeve.

D. Water Stop Ties: For water-holding structures, basements, pipe galleries, and accessible spaces below finish grade, furnish one of the following:

1. Neoprene water stop 3/16-inch thick and 15/16 inch diameter whose center hole is one-half diameter of tie, or molded plastic water stop of comparable size.

E. Elastic Vinyl Plug:

1. Design and size of plug shall allow insertion with tool to enable plug to elongate and return to original length and diameter upon removal forming watertight seal.

2. Manufacturer:

a. Dayton Superior; A58 Sure Plug.

b. Or acceptable equivalent product.

F. Mechanical EPDM Rubber Plug:

1. Mechanical plug for taper tie

2. Manufacturers:

a. Sika Greenstreak, St. Louis, MO; X-Plug

b. Or acceptable equivalent product.

3. Friction fit plugs will not be allowed.

2.06 BOND BREAKER:

A. Bond breaker shall be a V.O.C.-compliant nonstaining type that will provide positive bond prevention.

B. Manufacturers:

1. Edoco Burke; Clean Lift 90 W.B.

2. Nox-Crete, Inc.; Silcoseal 97EC.

3. Or acceptable equivalent product.

2.07 FORM CAULKING:

A. Form caulking shall be a one-component, gun-grade silicone sealant that is capable of producing flush, watertight and non-absorbent surfaces and joints. Sealant shall be compatible with the type of forming material and concrete ingredients used.

B. Products:

1. Series 1200 Construction Caulking; GE Silicones.

2. Dow Corning 999-A; Dow Corning Co.

3. Sikasil WS-295; Sika Corporation.

4. Or acceptable equivalent product.

2.08 CHAMFER STRIPS:

A. Provide 3/4 inch by 3/4-inch chamfer strips milled from clear, straight-grain pine, surfaced each side or extruded vinyl type with or without nailing flange unless otherwise shown on the Contract Documents.

2.09 INSERTS:

A. Provide galvanized cast steel or galvanized welded steel inserts, complete with anchors to concrete and fittings such as bolts, wedges and straps.

2.10 FORM RELEASE AGENT:

A. Form release agent shall not bond with, stain, or adversely affect concrete surfaces and shall not impair subsequent treatments of concrete surfaces. Form release agent shall be a ready-to-use water-based material formulated to reduce or eliminate surface imperfections and containing no mineral oil or organic solvents.

B. Certified as meeting the requirement of ANSI/NSF 61 for contact with potable water.

C. Manufacturers and Products:

1. BASF; MBT, Rheofinish 211.

2. Cresset Chemical Company; Crete-Lease 20-VOC.

3. Unitex Chemicals; Farm Fresh.

4. Symons Corporation: Magic Kote

5. Or acceptable equivalent product.

PART 3 - EXECUTION

3.01 FORM TOLERANCES:

A. Comply with the requirements of ACI 117 for tolerances for formed surfaces except as specified in Table 03100-1.

Table 03100-1	
Vertical alignment (plumbness)	1/4-inch in any 10 feet and 1-inch maximum for entire length
Variation in the lines and surfaces of foundation mats, base slabs and walls	1/4-inch in any 10 feet and 1-inch max. for entire length
Variation from the level or from the grades indicated on the drawings	1/4-inch in any 10 feet
Variation of the linear building lines from established position in plan	1/2-inch in any 20 feet and 1-inch maximum for entire length
Variation of distance between walls	1/4-inch in any 10 feet and 1-inch maximum for entire length and height
Variation in the sizes and locations of sleeves, floor openings and wall openings	Minus 1/4-inch. Plus 1/2-inch.
Variation in cross-sectional dimensions of columns and beams and in the thickness of slabs and walls	Minus 1/4-inch. Plus 1/2-inch.
Offset between adjacent panels of formwork facing material	1/2-inch (ACI 117 Class C finish).
Offset between adjacent panels of formwork facing material for exposed surfaces where appearance is of importance	1/8-inch (ACI 117 Class A finish).

B. Tolerances are not cumulative

C. Where equipment is to be installed, comply with manufacturer's tolerances if more restrictive than above.

D. Failure of the forms to produce the specified concrete surface and surface tolerance shall be grounds for rejection of the concrete work. Rejected work shall be repaired or replaced at no additional cost to the Owner.

3.02 PREPARATION:

A. Clean form surfaces to be in contact with concrete of foreign material prior to installation. Tape, gasket, plug, and/or caulk joints, gaps, and apertures in forms so that the joint will remain watertight and withstand placing pressures without bulging outward or creating surface irregularities.

B. Coat form surfaces in contact with concrete with a form release agent prior to form installation.

C. Keep form coatings off steel reinforcement, items to be embedded, and previously placed concrete.

D. Steel Forms: Apply form release agent to steel forms as soon as they are cleaned to prevent discoloration of concrete from rust.

E. Form liners for architectural concrete finish shall be installed in accordance with the manufacturer's recommendations.

3.03 ERECTION AND INSTALLATION:

A. Forms shall be constructed in accordance with ACI 347 to required dimensions, plumb, straight and mortar tight. Forms shall be substantial, properly braced, and tied together to maintain position and shape and to resist all pressures to which they may be subject. Unless otherwise indicated on the Contract Documents, formwork shall be constructed so that the concrete surfaces will conform to the tolerance limits in ACI 117 and herein specified.

B. Provide means for holding adjacent edges and ends of form panels tight and in accurate alignment to prevent the formation of ridges, fins, offsets, or similar surface defects in the finished concrete.

C. Provide exterior corners of concrete members with chamfers as specified.

D. Provide means for removing forms without injury to the surface of finished concrete.

E. Do not embed any form-tying device or part thereof other than metal in the concrete.

F. Locate large end of taper tie on the "wet" side of the wall.

G. Use only form or form-tying methods that do not cause spalling of the concrete upon form stripping or tie removal.

H. Form surfaces of concrete members except where placement of the concrete against the ground is shown in the drawings or as indicated below. The dimensions of concrete members shown in the drawings apply to formed surfaces, except where otherwise indicated. Add 2 inches of concrete where concrete is placed against trimmed undisturbed ground in lieu of forms. Placement of concrete against the ground shall be limited to footings and other nonexposed concrete and only where the character of the ground is such that it can be trimmed to the required lines and will stand securely without caving or sloughing.

I. Provide openings with continuous keyways and water stops. Provide a slight flare to facilitate grouting and the escape of entrained air during grouting. Provide formed openings with additional reinforcement as shown in the typical structural details. Reinforcing shall be at least 2 inches clear from the opening surfaces and encased items.

J. Set anchor bolts and other embedded items accurately before placing concrete and hold securely in position until the concrete is placed and set. Check special castings, channels, or other metal parts that are to be embedded in the concrete prior to and again after placing concrete. Check nailing blocks, plugs, and strips necessary for the attachment of trim, finish, and similar work prior to placing concrete.

3.04 PROTECTION:

A. During installation, the forms shall not be used as a storage platform nor as a working platform until the forms have been permanently fastened in position.

3.05 PIPES AND WALL CASTINGS CAST IN CONCRETE:

A. Install wall castings, wall flanges, and wall anchors before placing concrete. Do not weld, tie, or otherwise connect the wall castings or anchors to the reinforcing steel.

B. Pipes or wall castings located below operating water level shall have water stop ring collars and shall be cast in place. Do not block out such piping and grout after the concrete section is cast unless permitted, authorized or directed by the Engineer. Pipes fitted with thrust rings shall be cast in place.

3.06 REMOVAL OF FORMS:

A. Forms shall be removed in accordance with ACI 347 recommendations without damage to concrete and in a manner to ensure complete safety to the structure. Forms, form ties and bracing shall not be removed without specific permission of the Contractor's Registered Professional Engineer.

B. The following table indicates the minimum allowable time after the last cast concrete is placed before forms, shoring, or wall bracing may be removed; during which the air surrounding the concrete is above 50 degrees F.

Table 03100-2	
Sides of footings and encasements; Walls; Vertical sides of slabs, beams, girders; Columns; Similar members not supporting loads.	24 hours
Bottom forms of slabs, beams, and girders; and shoring for slabs, beams, and girders with immediate reshoring.	Until concrete strength reaches 70 percent specified 28-day strength
Bottom forms of slabs, beams, and girders; and shoring for slabs, beams, and girders without reshoring	Until concrete strength reaches specified 28-day design strength

C. Removal times will be increased if the concrete temperature following placement is permitted to drop below 50 degrees F.

D. Do not remove supports and reshore.

3.07 PATCHING OF TAPERED TIE HOLES:

A. Clear tie hole of all loose debris with a taper tie void brush and flush debris from tie hole with air or water.

B. Install plug from larger tie hole end in accordance with manufacturer’s instructions using an insertion tool as recommended by the manufacturer.

C. Fill each side of hole with mortar. Apply mortar to the "wet" side of the wall first. Consolidate mortar solidly into the hole.

3.08 CLOSEOUT:ACTIVITIES:

A. Provide in accordance with Section 01700.

END OF SECTION

SECTION 03200

CONCRETE REINFORCEMENT

PART 1 - GENERAL

1.01 DESCRIPTION:

A. Provide concrete reinforcement as indicated and specified:

1. Section Includes:

a. Reinforcement bars.

b. Welded wire reinforcement.

c. Reinforcement accessories.

B. Provide concrete reinforcement for architectural, civil, mechanical, and electrical work as shown on the drawings or specified under those disciplines.

1.02 REFERENCES:

A. ASTM International (ASTM):

1. A184: Standard Specification for Fabricated Deformed Steel Bar Mats for Concrete Reinforcement.

2. A615: Standard Specification for Deformed and Plain Billet-Steel Bars for Concrete Reinforcement.

3. A616: Standard Specification for Rail-Steel Deformed and Plain Bars for Concrete Reinforcement.

4. A617: Standard Specification for Axle-Steel Deformed and Plain Bars for Concrete Reinforcement.

5. A706: Standard Specification for Low-Alloy Steel Deformed and Plain Bars for Concrete Reinforcement.

6. ASTM A1064/A1064M - Standard Specification for Steel Wire and Welded Wire Reinforcement, Plain and Deformed, for Concrete

B. American Concrete Institute (ACI):

1. 301: Standard Specification for Structural Concrete.

2. 315: Details and Detailing of Concrete Reinforcement.

3. 318: Building Code Requirements for Structural Concrete.

4. 350: Building Code Requirements for Environmental Engineering Concrete Structures

C. Concrete Reinforcing Steel Institute (CRSI):

1. Manual of Standard Practice.

2. Placing Reinforcing Bars.

D. American Welding Society (AWS):

1. D1.4: Structural Welding Code, Reinforcement Steel.

E. Where reference is made to one of the above standards, the version in effect at the time of bid opening shall apply.

1.03 SUBMITTALS:

A. Unless otherwise acceptable to the Engineer, each submittal shall include reinforcement only for a single structure or part thereof. Shop drawings depicting multiple structures on the same sheet are not acceptable.

B. Shop Drawings:

1. Submit bar lists and placing drawings for all reinforced concrete and masonry structures in accordance with Section 01300.

2. Detail reinforcement in conformance with ACI 315.

3. Clearly indicate bar sizes, spacing, locations, quantities and total weight of reinforcement steel and wire reinforcement, bending schedules, and supporting and spacing devices. Show joints, with applicable joint reinforcement and waterstops.

4. Coordinate bar splicing and placement with Contractor's concrete placing schedule and joint locations. Do not add or delete joints without permission from the Engineer.

5. Show wall reinforcement in elevation. Show entire elevation of wall from top to bottom and end to end. Do not show partial elevations. Show all dowels, joints and pockets in walls.

6. Show slab reinforcement in plan view. Show all dowels, joints, openings and recesses in slabs.

7. Show location and size of all penetrations greater than 12-inches in diameter or least dimension of the opening with the corresponding added reinforcement around the penetrations.

8. Clearly show marking for each reinforcement item.

9. Indicate locations of reinforcement bar cut-offs, splices and development lengths.

C. Submit certified copies of mill test reports of reinforcement analysis dated within the last three months for each shipment of reinforcement with specific lots in shipments identified.

D. Chemical composition of reinforcement steel: Ladle analysis indicating percentage of carbon, phosphorous, manganese and sulfur present in steel.

E. Where mechanical couplers are required or permitted to be used to splice reinforcement steel, submit Manufacturer's literature that contains instructions and recommendations for installation for each type of coupler used; certified test reports that verify the load capacity of each type and size of coupler used; and Shop Drawings that show the location of each coupler with details of how they are to be installed in the formwork.

1.04 QUALITY ASSURANCE:

A. Comply with requirements in Section 01400 and as specified.

B. Do not fabricate reinforcement until shop and placement drawings have been reviewed and accepted by the Engineer.

C. Perform concrete reinforcement work in accordance with CRSI Manual of Practice and ACI 315**.**

1.05 INSPECTION AND TESTING:

A. In no case shall any reinforcement steel be covered with concrete until the installation of the reinforcement has been observed by the Engineer and the Engineer’s authorization to proceed with the concreting has been obtained. The Engineer shall be given a minimum of 48 hours prior notice of the readiness of placed reinforcement for observation. The forms shall be kept open until the Engineer has finished observations of the reinforcement steel.

1.06 DELIVERY STORAGE AND HANDLING:

A. Comply with the requirements in Section 01610.

B. Keep reinforcement steel free from mill scale, rust, dirt, grease or other foreign matter.

C. Ship and store reinforcement steel with bars of the same size and shape fastened in bundles with durable tags, marked in a legible manner with waterproof markings showing the same "mark" designations as those shown on the submitted placing drawings.

D. Store reinforcement steel off the ground, protected from moisture and kept free from dirt, oil or other injurious contaminants.

PART 2 - PRODUCTS

2.01 REINFORCEMENT STEEL:

A. Reinforcement Steel: ASTM A615/A615M, 60 ksi yield grade; deformed billet steel bars.

B. Reinforcement shall be clean and free from loose mill scale, dirt, grease, oil, form release agent, dried concrete or any material reducing bond with concrete.

C. Welded Wire Reinforcement:

1. Provide welded wire reinforcement conforming to ASTM A1064 in flat sheets.

2. Provide deformed welded wire reinforcement conforming to ASTM A1064 in flat sheets.

3. Provide support bars and reinforcement bar supports as specified herein to obtain the concrete cover indicated.

2.02 ACCESSORY MATERIALS:

A. Tie Wire: Minimum 16 gage annealed type.

B. Chairs, Bolsters, Bar Supports, and Spacers: sized and shaped for strength and support of reinforcement during concrete placement including load bearing pad on bottom of base slabs and slabs on grade to prevent puncturing the vapor retarder.

C. Special Chairs, Bolsters, Bar Supports, and Spacers Adjacent to Weather Exposed Concrete Surfaces: plastic coated steel, stainless steel or plastic type; size and shape as required.

D. Provide 3-inch by 3-inch plain precast concrete blocks, precast concrete doweled blocks or concrete brick for support of bottom reinforcement in foundation mats, base slabs, footings, pile caps, grade beams and slabs on grade. Provide block thickness to produce concrete cover of reinforcement as indicated.

E. Mechanical Couplers

1. Reinforcement Tension Bar Splicers:

   a. Cadweld or Lenton rebar splicers by Erico Products, Inc. and Dayton Barsplice, Inc.

   b. DB-SAE splicer system by Richmond Screw Anchor Company, Inc., C2D rebar flange coupler by Williams Form Engineering Corporation and Lenton Form Saver by Erico Products, Inc.

   c. Develop minimum 125 percent of yield capacity of bars spliced in tension when tested as assembly in accordance with ASTM A370 and A615.

F. Reinforcement Compression Bar Splicers:

   1. Manufacturers: G-Loc splicers by Gateway Building Products Division

   2. Speed-Sleeve by Erico Products, Inc.

G. Provide epoxy for grouting reinforcement bars specifically formulated for such application for the moisture condition, application temperature, and orientation of the hole to be filled. Epoxy grout shall meet the requirements in Section 03600 Grout.

2.03 FABRICATION:

A. Fabricate concrete reinforcement in accordance with CRSI Manual of Standard Practice, ACI 315 and ASTM A184/A184M.

B. Locate reinforcement splices not indicated on Drawings, at point of minimum stress.

C. Cold bend bars. Do not straighten or rebend bars.

D. Do not heat reinforcement steel to bend or straighten.

E. Bend bars around a revolving collar having a diameter of not less than that recommended by ACI 318.

F. Cut bar ends that are to be butt spliced or threaded by saw cutting. Terminate such ends in flat surfaces within 1-1/2 degrees of a right angle to the axis of the bar.

PART 3 - EXECUTION

3.01 INSTALLATION:

A. Place, support and secure reinforcement against displacement. Do not deviate from required position. Place reinforcement a minimum of 2 inches clear of any metal pipe or fittings.

B. Do not displace or damage vapor retarder.

C. Position dowels accurately. Rigidly support, align and securely tie dowels normal to the concrete surface before concrete placement. Setting dowels into wet concrete is prohibited.

D. Position wall dowels projecting from base slabs on grade with templates or guides held in place above the concrete placement line. Position the templates to obtain the required clearance between the dowels and the face of the walls.

E. Bars additional to those indicated that may be found necessary or desirable by the Contractor for the purpose of securing reinforcement in position shall be provided by the Contractor at no additional cost to the Owner.

F. Do not extend continuous reinforcement or other fixed metal items through expansion joints. Provide 2 inches clearance from each face of expansion joint.

G. Provide additional reinforcement bars to support top reinforcement in slabs. Do not shift reinforcement bars from positions in upper layers to positions in lower layers as a substitute for additional support bars.

H. Support reinforcement steel in accordance with CRSI "Placing Reinforcement Bars" with maximum spacing of 4'-0".

I. Tie reinforcement steel at intersections in accordance with CRSI "Placing Reinforcement Bars":

1. Maximum tie spacing for footings, walls and columns: every third intersection or 3 feet.

2. Maximum spacing for slabs and other work: every fourth intersection or 3 feet.

3. Tie a minimum of 25 percent of all intersecting bars in foundation mats, base slabs, footings, pile caps, slabs on grade and elevated slabs.

4. Secure all dowels in place before placing concrete.

5. Tie wires shall be bent away from the forms and from finished concrete surfaces in order to provide the required concrete coverage.

J. Locate reinforcement to avoid interference with items drilled in later, such as concrete anchors.

K. Extend welded wire reinforcement to within 2 inches of edges of slab or section. Lap sheets at least 12 inches or two wire spaces, whichever is greater, at ends and edges and wire tightly together. Stagger end laps.

L. Unless shown otherwise on Drawings, place welded wire reinforcement in slabs on grade between the upper third point and mid-point of slab. Placing welded wire reinforcement on the subgrade and pulling it up during concrete placement is not permitted.

M. Support welded wire reinforcement placed over the ground on wired concrete blocks spaced not more than 3 feet on centers in any direction.

N. Support welded wire reinforcement placed over horizontal forms on slab bolsters spaced not more than 30 inches on center.

O. Mechanical coupler systems may be substituted for dowels at Contractor's option when permitted by Engineer.

P. Provide additional reinforcement bars to support ties and stirrups in beams where top reinforcement is not continuous.

Q. Securely support and tie reinforcement steel to prevent movement during concrete placement.

R. Unless otherwise shown on the Drawings or permitted by the Engineer, do not bend reinforcement bars that project from in-place concrete.

S. Do not weld reinforcement steel bars (including tack welded) either during fabrication or erection unless specifically shown on the Drawings or specified herein, or unless prior written permission has been obtained from the Engineer. Immediately remove bars that have been welded, including tack welds, without such permission from the work. Comply with AWS D1.4 when welding of reinforcement is or called for.

T. Reinforcement steel interfering with the location of other reinforcement steel, conduits or embedded items may be moved up to 3 inches. Make greater displacement of bars to avoid interference only with the permission of the Engineer. Do not cut reinforcement to install inserts, conduits, mechanical openings or other items without the prior permission from the Engineer.

U. Setting bars and welded wire reinforcement on layers of fresh concrete as the work progresses or adjusting reinforcement during the placement of concrete is prohibited.

V. Provide and place safety caps on all exposed ends of vertical reinforcement that pose a danger to injury or life safety.

3.02 REINFORCEMENT AROUND OPENINGS AND PENETRATIONS:

A. Accommodate placement of formed openings and penetrations.

B. Unless specific additional reinforcement around openings and penetrations is shown on the Drawings, provide additional reinforcement steel on each side of opening or

penetration equivalent to one half of the cross-sectional area of the reinforcement steel interrupted by an opening or penetration. The bars shall have sufficient length to be fully developed at each end beyond the opening or penetration.

C. Refer to details on Drawings for additional diagonal bars around openings or penetrations and bar extension length on each side of openings or penetrations.

3.03 SPLICING OF REINFORCEMENT:

A. Splices may be used to provide continuity due to bar length limitations. Do not splice reinforcement that is detailed to be continuous in the Drawings.

B. Provide tension lap splices at all laps in compliance with ACI 318. Class A splices may be used when 50 percent or less of the bars are spliced within the required lap length. Use Class B splices at all other locations.

C. Except as otherwise indicated on the Drawings, stagger splices in circumferential reinforcement in circular walls using Class B tension splices. Do not splice adjacent bars within the required lap length.

D. Make splices in column spiral reinforcement, when necessary, by a lap of 1-1/2 turns.

E. Reinforcement shall be continuous through construction joints.

F. Reinforcement may be spliced at construction joints provided that entire lap is placed within only one concrete placement.

3.04 ACCESSORIES:

A. Provide accessories such as chairs, chair bars and the like in sufficient quantities and strength to adequately support the reinforcement and prevent its displacement during the erection of the reinforcement and the placement of concrete.

B. Use precast concrete blocks where the reinforcement steel is to be supported over soil.

C. Provide stainless steel bar supports or steel chairs with plastic tips where the chairs are set on forms for a concrete surface that will be exposed to weather, high humidity or liquid (including bottom of slabs over liquid containing areas) unless otherwise noted on contract documents.

D. Do not use metal chairs, ferrous clips, nails, etc. that extend to the surfaces of the concrete. Do not use stones, brick or wood block supports.

E. Do not use alternate methods of supporting top steel in slabs, such as steel channels supported on the bottom steel or vertical reinforcement steel fastened to the bottom and top mats unless permitted by the Engineer.

F. Mechanical Couplers:

1. Couplers that are located at a joint face can be a type that can be set either flush or recessed from the face as indicated.

2. Seal couplers during concrete placement to completely eliminate concrete or cement paste from entering.

3. Recess couplers intended for future connections a minimum of 1/2 inch from the concrete surface. After the concrete is placed, plug the coupler with plastic plugs that have an O-ring seal and the recess filled with sealant to prevent any contact with water or other corrosive materials.

4. Unless indicated otherwise, provide mechanical coupler spacing and size to match the spacing and size of the reinforcement indicated for the adjacent section.

3.05 FIELD QUALITY CONTROL:

A. Remove reinforcement with kinks or bends not shown on shop or placement drawings. Remove such reinforcement from job site and replace with new fabricated steel. Do not field bend of reinforcement unless reinforcement is indicated or specified to be field bent.

B. Protect reinforcement from rusting, deforming, bending, kinking and other injury. Clean in-place reinforcement that has rusted or been splattered with concrete using sand or water blasting prior to incorporation into the Work.

3.06 CONTRACT CLOSEOUT:

A. Provide in accordance with Section 01700.

END OF SECTION

SECTION 03250

CONCRETE JOINTS AND ACCESSORIES

PART 1 - GENERAL

1.01 DESCRIPTION:

A. This section describes materials, testing, and installation of concrete joints and accessories as specified and as shown on contract drawings.

1.02 REFERENCES:

A. ASTM International (ASTM):

1. A276: Standard Specification for Stainless Steel Bars and Shapes.

2. C920: Specification for Elastomeric Joint Sealants

3. C1193: Guide for Use of Joint Sealants

4. D1752: Specification for Preformed Sponge Rubber and Cork Expansion Joint Fillers for Concrete Paving and Structural Construction.

B. National Sanitation Foundation (NSF):

1. 61: Drinking Water System Components – Health Effects

C. Environmental Protection Agency (EPA):

1. 40 CFR 59: National Volatile Organic Compound Emission Standards for Consumer and Commercial Products.

D. Corps of Engineers:

1. CRD-C 572: Specifications for Polyvinylchloride Waterstop.

E. Federal Specifications:

1. TT-S-00230C: Sealing Compound: Elastomeric Type, Single Component

1.03 SUBMITTALS:

A. Submit following shop drawings in accordance with 01300.

1. Manufacturer's printed data and application instructions for specified materials and locations where materials are to be used.

2. Submit one sample of each type of water stop.

3. Submit layouts for joints.

4. Certification that materials used within the joint system are compatible with each other.

5. Manufacturer’s certification that joint materials meet the requirements of ANSI/NSF 61 for concrete surfaces that will be in contact with potable water.

1.04 QUALITY ASSURANCE:

A. Comply with requirements in section 01400 and as specified.

B. Do not add, relocate or omit joints without written permission from the Engineer.

C. Reject material exceeding expiration date for use.

D. Clean concrete surfaces to receive expansion joint compound in accordance with the printed instructions of the joint compound manufacturer.

E. In structures to contain potable water, use joint materials that are ANSI/NSF 61 approved for contact with potable water.

1.05 DELIVERY, STORAGE AND HANDLING:

A. Comply with the requirements in section 01610.

B. Transport, handle and deliver materials to the job site in the manufacturer's sealed bags, unopened containers or banded pallets.

C. Store materials off the ground on a platform or skids and protect with covers from snow, rain and ground splatter.

D. Store expansion joint compounds in a dry location where they cannot freeze.

E. Store plastic products under cover in a dry location, out of direct sunlight.

1.06 MANUFACTURER'S SERVICES:

A. Prior to joint preparation for joints receiving sealant materials, require joint manufacturer's technical representative to demonstrate, on site, joint preparation, priming, and sealant materials application for the Contractor's personnel performing joint work.

PART 2 - PRODUCTS

2.01 ELASTOMERIC JOINT SEALANT:

A. Federal Specification TT-S-00230C Type 1, Class A, single component, cold applied, pourable, polyurethane.

1. Products:

a. Euclid Chemical Corp; Eucolastic 1

b. Mameco ; Vulkem 45

c. Or accepted equivalent product.

2.02 JOINT SEALANT FOR CONCRETE STRUCTURES:

A. Joint sealant shall be a multipart, gray, nonstaining, nonsagging, gun grade polyurethane sealant, which cures at ambient temperature to a firm, flexible, resilient, tear-resistant rubber. Sealant shall comply with ASTM C920, Type M, Grade P, Class 25 for horizontal joints and Grade NS, Class 25 for vertical joints and be recommended by the manufacturer for continuous immersion in water. Troweling of sealants into joints will not be permitted. Sealant shall meet requirements in Table 03250-1.

TABLE 03250-1

Characteristic or Parameter	Technical Requirements
Pot life	1 to 3 hours
Hardness	35 Shore A, +/- 5
Elongation	650 percent, ASTM D412
Tensile strength	200 psi, ASTM D412
Peel strength on concrete	No adhesion loss at 25 pounds
Temperature service range	40 to 167 degrees F
Immersion in water	Continuous

B. Products:

1. Tremco; Vulkem 227 or Vulkem 245 (for Type M, Grade P, Class 25)

2. Sika Corporation; Sikaflex-2CNS (for Grade NS, Class 25), Sikaflex-2CSL

3. Or accepted equivalent product.

C. For applications on walls and surfaces inclined more than 30 degrees from the horizontal, use multi-component chemical resistant polysulfide sealant conforming to ASTM C920, Type M, Grade NS, Class 25.

1. Sonneborn ; Sonolastic Two-part

2. Tamms; Hornflex-L

3. DuPont; Cormax PSC

4. Or accepted equivalent product.

2.03 EPOXY JOINT SEALANT:

A. 100 percent solids per ASTM D1259, two-part epoxy with an instantaneous Shore D hardness of 50 to 65 per ASTM D2240.

1. Metzger-McGuire Co.; MM80 or Edge Pro50

2. Euclid Chemical Corp. ; Euco700

3. Or accepted equivalent product.

2.04 BACKING ROD FOR EXPANSION JOINTS:

A. Provide an extruded closed-cell polyethylene foam rod. The rod shall be 1/4-inch larger in diameter than the joint width. Where possible, provide full-length sections for the joint; minimize splices.

1. Industrial Systems Department; Minicel backer rod

2. Hercules, Inc.; Plastic Products Group

3. Or accepted equivalent product.

2.05 BOND BREAKER TAPE:

A. Provide an adhesive-backed glazed butyl or polyethylene tape that will adhere to the premolded joint material or concrete surface. The tape shall be the same width as the joint. The tape shall be compatible with the sealant.

2.06 PREFORMED CONTROL JOINT:

A. One-piece, flexible, PVC joint former.

1. Vinylex Corp.; Kold-Seal Zip-Per Strip KSF-150-50-50

2. Or accepted equivalent product.

B. One-piece steel strip with preformed groove

1. Burke Concrete Accessories, Inc.; Keyed Kold Retained Kap

2. Or accepted equivalent product.

C. Provide the preformed control joint material in full-length unspliced pieces.

2.07 PREMOLDED JOINT FILLER FOR PAVEMENTS AND SLABS:

A. Joint filler shall be preformed, nonextruded type constructed of closed-cell neoprene conforming to ASTM D1752, Type I

B. Bituminous-type preformed expansion joint filler conforming to ASTM D994.

2.08 PREMOLDED JOINT FILLER FOR LIQUID CONTAINMENT STRUCTURES:

A. Self-expanding cork per ASTM D1752, Type III.

B. Sponge Rubber per ASTM D1752, Type I. Preformed, nonextruded type constructed of closed-cell neoprene.

2.09 EXPANSION JOINT DOWELS:

A. Stainless steel bar dowels conforming to ASTM A276, Type 316.

B. Thoroughly grease expansion joint dowels prior to placing adjoining (2nd placement) wall or slab concrete.

2.10 STYROFOAM FILLER BLOCK:

A. Styrofoam filler blocks for future construction and expansion joints.

1. Products:

a. Dow Chemical Company; Styrofoam SM brand

b. Or accepted equivalent product.

2.11 BOND BREAKER FOR JOINT COMPOUNDS:

A. Provide polyethylene tape.

PART 3 - EXECUTION

3.01 JOINTS:

A. Make joints only at locations shown on the contract drawings or as permitted by the Engineer. Any addition or relocation of construction joints proposed by the Contractor, must be submitted to the Engineer for written permission.

B. Relocate additional joints where they least impair strength of the member. In general, locate joints within the middle third of spans of slabs, beams and girders. If a beam intersects a girder at the joint, offset the joint a distance equal to twice the width of the member being connected. Locate joints in walls and columns at the underside of floors, slabs, beams or girders and at tops of footing or floor slabs.

C. Cast slabs and beams monolithically without horizontal joints unless specifically indicated on the drawings.

D. Do not use horizontal joints within foundation mats, base slabs, footings, pile caps, slabs on grade or elevated beams and slabs.

E. Provide joints in concrete fills and toppings at the same location as the joints in the supporting concrete.

F. Provide waterstops in all wall and slab joints in liquid containment structures and at locations shown on the contract Drawings. Do not provide metal waterstops unless permitted by Engineer.

G. Construction Joints

1. Provide flat ribbed waterstops at construction joints where shown on contract drawings and specified herein.

2. Where joint key ways are shown on contract drawings form keyways by beveled strips or boards placed at right angles to the formed face. Except where otherwise shown on contract drawings or specified, keyways shall be at least 1-1/2 inches in depth over at least 25 percent of the width of the section.

3. After the placement has been completed to the construction joint and the concrete has hardened, thoroughly clean the entire surface of the joint of surface laitance, loose concrete, foreign material, and expose clean aggregate by sandblasting or waterblasting the surface of construction joints before placing the new concrete. Cover horizontal construction joints with mortar. Spread uniformly and work thoroughly into irregularities of the surface. The water-cement ratio of the mortar in place shall not exceed that of the concrete to be placed, and the consistency of the mortar shall be suitable for placing and working.

4. In case of emergency, place additional construction joints. (An interval of 45 minutes between two consecutive batches of concrete shall constitute cause for an emergency construction joint.)

H. Control Joints:

1. Do not use control joints in liquid containment structures.

3.02 INSTALLATION OF JOINT SEALANTS:

A. Immediately before installing the joint sealant, clean the joint cavity by sandblasting or power wire brushing. Install bond breaker tape per manufacturer's instructions.

B. Apply masking tape along the edges of the exposed surface of the exposed joints.

C. Application criteria for the sealant materials, such as temperature and moisture requirements and primer cure time, shall be in accordance with the recommendations of the sealant manufacturer.

D. After the joints have been prepared as described above, apply the joint sealant. Apply the primer, if required, and joint sealant only with the equipment and methods recommended by the joint sealant manufacturer.

E. Trowel the joints smooth with a tuck pointing tool wiped with a solvent recommended by the sealant manufacturer.

F. After the sealant has been applied, remove the masking tape and any sealant spillage.

G. Sealants used in water retaining structures shall achieve final cure at least seven days before the structure is filled with water.

3.03 LEAKAGE TESTING:

A. Test hydraulic structures in accordance with Section 03800.

3.04 CLOSEOUT ACTIVITIES:

A. Provide in accordance with Section 01700.

END OF SECTION

SECTION 03255

NON-EXPANDING WATERSTOPS

PART 1 - GENERAL

1.01 DESCRIPTION:

A. Provide polyvinyl chloride (PVC) waterstops in construction and expansion joints between dry areas and sources of liquid, between dry areas and the ground, and between sources of liquid and the ground as indicated on the drawings and specified herein.

1. Waterstops shall form a continuous watertight diaphragm to prevent leakage.

2. Provide 6" ribbed waterstops in construction joints.

B. Provide TPE-R waterstops for ozone and chemical containment applications.

1.02 REFERENCES:

A. ASTM International (ASTM):

1. D412: Standard Test Methods or Vulcanized Rubber and Thermoplastic Elastomers – Tension.

2. D570: Standard Test Method for Water Absorption of Plastics

3. D624: Standard Test method for Tear Strength of Conventional Vulcanized Rubber and Thermoplastic Elastomers.

4. D638: Standard Test Method for Tensile Properties of Plastics

5. D746: Standard Test Method for Brittleness Temperature of Plastics and Elastomers by Impact.

6. D747: Standard Test Method for Apparent Bending Modulus of Plastics by Means of a Cantilever Beam.

7. D792: Standard Test Methods for Density and Specific Gravity of Plastics by Displacement.

8. D1171: Standard Test Method for Rubber Deterioration – Surface Ozone Cracking Outdoors or Chamber (Triangular Specimens)

9. D1259: Standard Test Methods for Nonvolatile Content of Resin Solutions.

10. D2240: Standard Test Method for Rubber Property – Durometer Hardness

B. National Sanitation Foundation (NSF):

1. 61: Drinking Water System Components – Health Effects

C. Corps of Engineers:

1. CRD-C 572: Specifications for Polyvinylchloride Waterstop.

1.03 SUBMITTALS:

A. Submit following shop drawings in accordance with 01300.

1. Manufacturer's printed data and application instructions for specified materials and locations where materials are to be used.

2. Manufacturer’s certification that waterstop materials meet the requirements of ANSI/NSF 61 for concrete surfaces that will be in contact with potable water.

1.04 QUALITY ASSURANCE:

A. Comply with requirements in section 01400 and as specified.

B. Reject waterstops containing scrap or reclaimed material or pigment.

C. Position waterstops in construction and expansion joints as indicated.

D. Use factory made and tested crosses, tees and ells at corners and intersections.

1.05 DELIVERY, STORAGE AND HANDLING:

A. Comply with the requirements in section 01610.

B. Transport, handle and deliver materials to the job site in the manufacturer's sealed bags, unopened containers or banded pallets.

C. Store materials off the ground on a platform or skids and protect with covers from snow, rain and ground splatter.

D. Store plastic products under cover in a dry location, out of direct sunlight.

PART 2 - PRODUCTS

2.01 PVC WATERSTOP:

A. Provide polyvinyl chloride waterstops manufactured from virgin polyvinyl chloride plastic compound conforming to Corps of Engineers Specification CRD-C572.

B. Provide waterstops of type, shape and size indicated with looped galvanized steel wire or grommets spaced at 12 inches on center along both edges.

C. Provide factory-made crosses, tees and ells fabricated by the waterstop manufacturer using thermostatically controlled electric heat source.

D. Provide waterstops resistant to chemical action with Portland cement, alkalis, acids, and not affected by mildew or fungi. It shall show no effect when immersed for 10 days in a 10 percent solution of sulfuric or hydrochloric acid, saturated lime solution or salt water. Water stops shall be such that any cross section will be dense, homogeneous, and free from porosity and other imperfections. They shall be symmetrical in shape.

E. The material shall meet the requirements in Table 03255-1.

TABLE 03255-1

Property	Test Method	Limit
Water Absorption	ASTM D 570	5% maximum
Tear Resistance	ASTM D 624	250 #/inch minimum
Ultimate Elongation	ASTM D 638	300% minimum
Tensile Strength	ASTM D 638	1750 psi minimum
Low Temperature Brittleness	ASTM D 746	No Failure at -35°F
Stiffness in Flexure	ASTM D 747	600 psi minimum
Ozone Resistance	ASTM D 1149	No Failure
Volatile Loss	ASTM D 1203	0.50% maximum
Hardness, Shore A	ASTM D 2240	65 to 80
Tensile strength after accelerated extraction	CRD C 572	1500 psi minimum
Elongation after accelerated extraction	CRD C 572	280% minimum
Effect of Alkalis after 7 days - Weight Change	CRD C 572	-0.10% to +0.25%
Effect of Alkalis after 7 days - Hardness Change	CRD C 572	+5 maximum

F. PVC waterstops for construction joints: Flat ribbed type, 6 inches wide with a minimum thickness of 3/8-inches.

1. Products:

a. Greenstreak: Model 679

b. Vinylex; Model R638

c. BoMetals, Inc.; Model TFR-638

d. Or accepted equivalent product.

PART 3 - EXECUTION

3.01 FABRICATION:

A. Make all splices on a bench following manufacturer's printed instructions and splicing procedures.

B. Use miter guide and portable power saw to cut spliced ends.

C. Maintain continuity of characteristic features of waterstop cross section including ribs and center bulb through splice.

D. Remove looped steel wire along both edges of waterstop adjacent to saw cut prior to splicing.

E. Make splices by heat sealing adjacent surfaces using a thermostatically controlled electric heat source in conformance with manufacturer's printed instructions.

F. Reform waterstop at splices using a remolding iron having a pattern matching the waterstop.

G. If splice shows any separation or lack of fusion, reject the splice, re-cut back at least one inch from rejected splice each side, re-weld.

H. Replace or repair damaged or punctured waterstops in conformance with manufacturer's printed instructions at no additional cost to the Owner.

I. Clean waterstops of curing compound, foreign materials and protrusions of hardened concrete and mortar.

J. Provide waterstops with an integral fastening system consisting of grommets or pre-punched holes.

3.02 INSTALLATION:

A. Place waterstop to form a continuous watertight diaphragm in joints.

B. Center waterstops in joints unless otherwise indicated. Do not embed center bulb in concrete.

C. Install waterstops in continuous lengths to minimize field splices.

D. Maintain 1-in. minimum clearance between waterstop and reinforcement and embedded items.

E. Use factory-made crosses, tees and ells at all corners and intersections.

F. Do not fold waterstops against bulkhead forms.

G. Secure waterstops in position with tie wire from loops to adjacent reinforcement on both sides every 12 in. along each edge.

H. Consolidate concrete during placement in vicinity of waterstop without damaging or dislodging waterstop.

I. Protect exposed waterstop from damage.

J. Terminate vertical waterstops three inches below top of concrete walls in open tanks, at the underside of elevated framed slabs that are above maximum process liquid levels and above finish grade in exterior foundation walls.

K. Do not use split waterstops unless specifically indicated.

L. Attach waterstop to existing concrete using 1/4-inch by 2-1/4 inch stainless steel sleeve expansion bolt with stainless steel batten bars

3.03 CLOSEOUT ACTIVITIES:

A. Provide in accordance with Section 01700.

END OF SECTION

SECTION 03256

EXPANDING WATERSTOPS

PART 1 - GENERAL

1.01 DESCRIPTION:

A. This section describes materials, testing, and installation of concrete joints and accessories as specified and as shown on contract drawings.

1.02 REFERENCES:

A. ASTM International (ASTM):

1. D638: Test Method for Tensile Properties of Plastic.

2. D1149: Test Method for Rubber Deterioration - Surface Ozone Cracking in a Chamber

3. D1203: Test Methods for Volatile Loss from Plastics Using Activated Carbon Methods.

4. D2240: Standard Test Method for Rubber Property – Durometer Hardness

B. National Sanitation Foundation (NSF):

1. 61: Drinking Water System Components – Health Effects

1.03 SUBMITTALS:

A. Submit following shop drawings in accordance with 01300.

1. Manufacturer's printed data and application instructions for specified materials and locations where materials are to be used.

2. Manufacturer’s certification that waterstop materials meet the requirements of ANSI/NSF 61 for concrete surfaces that will be in contact with potable water.

1.04 QUALITY ASSURANCE:

A. Comply with requirements in section 01400 and as specified.

B. Reject and replace waterstops which have become wet or exhibit swelling prior to concrete placement.

C. Position waterstops in joints as indicated.

D. Provide waterstops in maximum practical lengths to minimize joints.

E. Use adhesives manufactured by or recommended by the waterstop manufacturer for attachment of the waterstop to concrete.

F. Waterstops shall be positioned to provide a minimum of 3 inch concrete cover.

G. In structures to contain potable water, use joint materials that are ANSI/NSF 61 approved for contact with potable water

1.05 DELIVERY, STORAGE AND HANDLING:

A. Comply with the requirements in section 01610.

B. Transport, handle and deliver materials to the job site in the manufacturer's sealed bags, unopened containers or banded pallets.

C. Store materials off the ground on a platform or skids and protect with covers from snow, rain and ground splatter.

D. Store hydrophilic waterstops under cover in a dry location, out of direct sunlight.

E. Waterstop shall be maintained in a dry condition until concrete placement.

PART 2 - PRODUCTS

2.01 HYDROPHILIC GASKET WATERSTOP:

A. Provide a bentonite free rubber waterstop. Waterstop shall expand by a minimum of 80 percent of dry volume in the presence of water to form a watertight joint seal without damaging the concrete in which it is cast. Provide minimum concrete cover as recommended by the waterstop manufacturer.

B. Provide hydrophilic rubber gasket waterstops fabricated of non-vulcanized rubber, chloroprene rubber, urethane polymers, vinylester polymers or combinations of these materials.

C. Provide waterstop as recommended by manufacturer for specific installation.

D. Provide hydrophilic gasket waterstops which meet the criteria in Table 03256-1.

Table 03256-1		
Property	**Test Method**	**Limit**
Ultimate Elongation	ASTM D 638	70% minimum
Tensile Strength	ASTM D 638	25 psi minimum
Ozone Resistance	ASTM D 1149	No Failure
Volatile Loss	ASTM D 1203	0.50% maximum
Hardness, Shore A	ASTM D 2240	20 to 60

E. Provide hydrophilic rubber gasket waterstops as manufactured by:

1. Duroseal Gasket Waterstop manufactured by BBZ USA;

2. Adeka Ultraseal MC-2010M manufactured by Adeka North America;

3. Swellseal 8 manufactured by de neef Construction Chemicals, Inc.;

4. Or accepted equivalent product.

2.02 HYDROPHILIC PASTE WATERSTOPS:

A. Provide hydrophilic rubber paste waterstops of urethane paste, thixotropic vinyl monomer or similar materials.

B. Hydrophilic rubber paste shall be compatible with gasket waterstop material.

C. Hydrophilic paste shall be 100% solids.

D. Provide hydrophilic paste waterstops which meet or exceed the criteria in Table 03256-2.

Table 03256-2		
Property	**Test Method**	**Limit**
Ultimate Elongation	ASTM D 638	50% minimum
Tensile Strength	ASTM D 638	25 psi minimum
Ozone Resistance	ASTM D 1149	No Failure
Volatile Loss	ASTM D 1203	0.50% maximum
Hardness, Shore A	ASTM D 2240	20 to 60

E. Provide hydrophilic rubber paste as manufactured by:

1. Duroseal Paste manufactured by BBZ USA;

2. Adeka Ultraseal P-201 manufactured by Adeka North America;

3. de neef; Swellseal WA

4. Or acceptable equivalent product.

PART 3 - EXECUTION

3.01 INSTALLATION:

A. Provide hydrophilic rubber gasket and paste waterstops where specifically indicated.

B. Center waterstops in joints unless otherwise indicated.

C. Consolidate concrete during placement in vicinity of waterstop without damaging or dislodging waterstop.

D. Clean joint surface of dirt, dust, debris and laitence immediately before applying waterstop and remove standing water.

E. Protect waterstops from moisture until concrete is placed. Waterstops which exhibit swelling prior to concrete placement shall be removed and replaced at the contractor's expense.

3.02 HYDROPHILIC GASKET WATERSTOPS:

A. Install hydrophilic gasket waterstops in continuous lengths to minimize joints. Provide waterstop in one continuous length insofar as practicable. Butt ends at joints of waterstop or overlap a minimum of 2 inch per manufacturer's instructions.

B. Seal joints in hydrophilic gasket waterstops with a hydrophilic rubber paste compound as recommended by the manufacturer.

C. Do not bend hydrophilic gasket waterstop. Cut square and butt joints at corners.

D. Waterstop shall be in continuous contact with the concrete surface.

E. Attach hydrophilic gasket waterstop to concrete surface by one of the following methods:

1. Fix hydrophilic gasket waterstop to concrete surface with continuous bead of hydrophilic rubber paste or adhesive. Paste or adhesive shall be provided by or as recommended by the waterstop manufacturer.

2. Fix hydrophilic gasket waterstop to concrete surface with masonry or concrete nails or power activated fasteners at a maximum 12 inch spacing.

F. Provide one fastener one inch from the top and a second fastener four inches from the top of vertical hydrophilic gasket waterstops regardless of which fastening method is used.

G. Do not compress or otherwise deform hydrophilic gasket waterstop when fastening to concrete.

H. Do not wrap hydrophilic gasket waterstops around pipes less than the minimum diameter recommended in the manufacturer's printed instructions.

3.03 HYDROPHILIC PASTE WATERSTOPS:

A. Clean dirt and debris from area to receive hydrophilic paste waterstop.

B. Bead of hydrophilic paste waterstop shall be a minimum of 1/4 by 1/2 inches.

C. Apply hydrophilic paste waterstop such that there is no break in the bead.

D. Place hydrophilic paste waterstop bead continuously around pipe near the center of the wall where used for sealing pipe penetrations. Allow hydrophilic paste waterstop to cure for 24 hours before placing concrete.

E. Install hydrophilic paste waterstops in accordance with the manufacturer's printed instructions.

3.04 CLOSEOUT ACTIVITIES:

A. Provide in accordance with Section 01700.

END OF SECTION

SECTION 03300

CAST-IN-PLACE CONCRETE

PART 1 - GENERAL

1.01 DESCRIPTION:

A. Provide all labor, materials, equipment and incidentals necessary to furnish and install cast-in-place concrete as specified and as shown on contract drawings.

B. Provide cast-in-place concrete for architectural, civil, mechanical, and electrical work as shown on the drawings or specified under specified under those disciplines.

1.02 REFERENCES:

A. American Concrete Institute (ACI):

1. ACI 211.1: Standard Practice for Selecting Proportions for Normal, Heavyweight, and Mass Concrete

2. ACI 301: Specifications for Structural Concrete

3. ACI 304R: Guide for Measuring, Mixing, Transporting and Placing Concrete

4. ACI 304.2R: Placing Concrete by Pumping Methods

5. ACI 305.1: Specification for Hot Weather Concreting

6. ACI 306.1: Standard Specification for Cold Weather Concreting

7. ACI 308.1: Specification for Curing Concrete

8. ACI 318: Building Code Requirements for Structural Concrete

9. ACI 350: Code Requirements For Environmental Engineering Concrete Structures

B. ASTM International (ASTM) Publications:

1. A 123: Standard Specification for Zinc (Hot-Dip Galvanized) Coatings on Iron and Steel Products

2. A 153: Standard Specification for Zinc Coating (Hot-Dip) on Iron and Steel Hardware

3. C 31: Standard Practice for Making and Curing Concrete Test Specimens in the Field

4. C 33: Standard Specification for Concrete Aggregates

5. C 39: Standard Test Method for Compressive Strength of Cylindrical Concrete Specimens

6. C 40: Standard Test Method for Organic Impurities in Fine Aggregates for Concrete

7. C 42: Standard Test Method for Obtaining and Testing Drilled Cores and Sawed Beams of Concrete

8. C 87: Standard Test Method for Effect of Organic Impurities in Fine Aggregate on Strength of Mortar

9. C 88: Standard Test Method for Soundness of Aggregates by Use of Sodium Sulfate or Magnesium Sulfate

10. C 94: Standard Specification for Ready-Mixed Concrete

11. C 109: Standard Test Method for Compressive Strength of Hydraulic Cement Mortars (Using 2-in Cube Specimens)

12. C 123: Standard Test Method for Lightweight Particles in Aggregate

13. C 136: Standard Test Method for Sieve Analysis of Fine and Coarse Aggregates

14. C 138: Standard Test Method for Unit Weight, Yield, and Air Content (Gravimetric) of Concrete

15. C 143: Standard Test Method for Slump of Hydraulic Cement Concrete

16. C 150: Standard Specification for Portland Cement

17. C 157: Standard Test Method for Length Change of Hardened Hydraulic Cement, Mortar and Concrete

18. C 171: Standard Specification for Sheet Materials for Curing Concrete

19. C 172: Standard Practice for Sampling Freshly Mixed Concrete

20. C 192: Standard Practice for Making and Curing Concrete Test Specimens in the Laboratory

21. C 231: Standard Test Method for Air Content of Freshly Mixed Concrete by the Pressure Method.

22. C 260: Standard Specification for Air-Entraining Admixtures for Concrete

23. C 295: Standard Guide for Petrographic Examination of Aggregates for Concrete

24. C 309: Standard Specification for Liquid Membrane-Forming Compounds for Curing Concrete

25. C 1017: Standard Specification for Chemical Admixtures for Use in Producing Flowing Concrete

26. C 1064: Standard Test Method for Temperature of Freshly Mixed Portland Cement Concrete

27. C 1107: Standard Specification for Packaged Dry, Hydraulic-Cement Grout (Nonshrink)

28. C 1116: Standard Specification for Fiber Reinforced Concrete

29. C 1260: Standard Test Method for Potential Alkali Reactivity of Aggregates (Mortar-Bar Method)

30. C 1293: Standard Test Method for Determination of Length Change of Concrete Due to Alkali-Silica Reaction

31. C 1567: Standard Test Method for Determining the Potential Alkali-Silica Reactivity of Combinations of Cementitious Materials and Aggregate (Accelerated Mortar-Bar Method)

32. C 1602: Standard Specification for Mixing Water Used in the Production of Hydraulic Cement Concrete

33. D 75: Standard Practice for Sampling Aggregates

34. E 154: Test Methods for Water Vapor Retarders Used in Contact with Earth Under Concrete Slabs, on Walls, or as Ground Cover

35. E 329: Standard Specification for Agencies Engaged in the Testing and/or Inspection of Materials used in Construction

C. American Association of State Highway and Transportation Officials (AASHTO):

M182: Standard Specification for Burlap Cloth Made from Jute or Kenaf and Cotton Mats

D. National Sanitation Foundation (NSF):

1. ANSI/NSF 61: Drinking Water System Components – Health Effects

1.03 SUBMITTALS:

A. Section 01300- Submittal Procedures: Requirements for submittals.

B. Product Data:

1. Manufacturer's specifications and instructions for all admixtures and curing materials. Manufacturer’s certification of compatibility of all admixtures.

C. Shop Drawings:

1. Provide certification that cement used complies with ASTM C150 and these specifications.

2. Provide certification that aggregates comply with ASTM C33. Submit gradation analysis with concrete mix designs.

3. Provide certification that aggregates do not contain pyrrhotite.

4. Provide certification of compliance with these specifications from the manufacturer of the concrete admixtures.

5. Prepare mix designs in accordance with ACI 318, except as modified herein.

   a. Submit concrete mix designs, laboratory 7-day and 28-day compressive test results and laboratory shrinkage test results for review and approval by the Engineer.

   b. Alternatively, submit test reports of 7-day and 28-day compressive tests and shrinkage test results of the proposed mix where that same mix has been used on two previous projects in the past twelve months.

   c. Do not use any concrete mixes in the work that have not been approved by the Engineer.

6. Plant Qualification: Submit certification from the National Ready Mixed Concrete Association indicating compliance with the specified qualification requirements.

7. Manufacturer’s certification that materials used in concrete, or the curing and repair of concrete, meet the requirements of ANSI/NSF 61 for concrete surfaces that will be in contact with potable water.

D. Test and Evaluation Reports

1. Provide results of drying shrinkage tests from trial concrete mixes by the Contractor's testing laboratory firm.

E. Manufacturers' Instructions

1. Provide epoxy bonding compound manufacturer's specific instructions for use. Provide manufacturer's certifications as to suitability of product to meet job

requirements with regard to surface, pot life, set time, vertical or horizontal application, and forming restrictions.

F. Field Quality Control Submittals

1. Provide delivery tickets for ready-mix concrete or weigh masters certificate per ASTM C94, including weights of cement and each size aggregate and amount of water added at the plant and record of placements. Record the amount of water added on the job on the delivery ticket. Water added at the plant shall account for moisture in both coarse and fine aggregate and liquid admixtures.

2. Batch tickets shall include the following information:

a. Load number, truck number and driver's name

b. Strength of concrete (compression strength)

c. Amount of concrete (cu. yds.)

d. Time truck was charged with cement

e. Type, brand and amount of cement

f. Type, brand and amount of admixtures

g. Amount of water withheld at the plant (if any)

h. Information necessary to calculate total mixing water

i. Maximum size of aggregate

j. Weights of fine and coarse aggregates

k. Signature of ready-mix representative

l. Concrete temperature at batching plant

m. Type and amount of fly ash, other pozzolan or slag cement.

1.04 SHRINKAGE TESTS:

A. The testing laboratory shall perform drying shrinkage tests for the trial batches as specified herein. Shrinkage limitations apply only to concrete for liquid containing structures.

B. Fabricate, cure, dry, and measure specimens in accordance with ASTM C157 modified as follows:

1. Remove specimens from molds at an age of 23 hours +/- 1 hour after trial batching, place immediately in water at 70 degrees F +/- 3 degrees F for at least 30 minutes, measure within 30 minutes thereafter to determine original length, and then submerge in saturated lime water at 73 degrees F +/- 3 degrees F.

2. At age seven days, take measurements to determine expansion, expressed as a percentage of original length. This length at age seven days shall be the base length for drying shrinkage calculations (zero days' drying age).

3. Immediately place specimens in a humidity-controlled room maintained at 73 degrees F +/- 3 degrees F and 50 percent +/- 4 percent relative humidity for the remainder of the test.

4. Report measurements to determine shrinkage expressed as percentage of the base length separately for 7, 14, 21, and 28 days of drying after 7 days of moist curing.

C. Compute the drying shrinkage deformation of each specimen as the difference between the base length (at zero days' drying age) and the length after drying at each test age.

1. Compute the average drying shrinkage deformation of the specimens to the nearest 0.0001 inch at each test age.

2. If the drying shrinkage of any specimen departs from the average of that test age by more than 0.0004 inch, disregard the results obtained from that specimen.

3. Report results of the shrinkage test to the nearest 0.001 percent of shrinkage.

D. Take compression test specimens in each case from the same concrete used for preparing drying shrinkage specimens. These tests shall be considered a part of the normal compression tests for the project.

E. Acceptance of Test Results: The maximum concrete shrinkage for specimens cast in the laboratory from the trial batch, as measured at 21-day drying age or at 28-day drying age, shall be 0.028 percent or 0.032 percent, respectively.

1. Use only mix designs for construction that have first met the trial batch shrinkage and compression requirements.

2. If the trial batch specimens do not meet both the strength and shrinkage requirements, revise the mix designs and/or materials and retest.

1.05 QUALITY ASSURANCE:

A. Provide in accordance with Section 01400.

B. Concrete not meeting the minimum specified 28-day design strength shall be cause for rejection and removal from the work.

C. Perform concrete work in conformance with ACI 301 unless otherwise specified.

D. Do not use calcium chloride or admixtures containing calcium chloride.

E. Do not place concrete until design mix, material tests, and trial concrete batch mix compression and shrinkage test results are approved by the Engineer. Approvals shall be obtained at least 30 days prior to the need for use on the job site.

F. The Contractor shall employ an independent testing laboratory, acceptable to the Engineer, to develop concrete mix designs and testing.

G. The Contractor shall employ an independent testing laboratory, acceptable to the Engineer, to test the conformity of materials proposed for use in the concrete mixes to the project specifications and to design and test concrete mixes proposed for use. Concrete testing shall be performed by an ACI Concrete Field Technician, Grade I or equivalent. The Contractor shall allow free access to obtain test samples.

H. The Owner shall employ an independent testing laboratory, acceptable to the Engineer, to test conformity of materials placed into the work during construction. Concrete testing shall be performed by an ACI Concrete Field Technician, Grade I or equivalent. The Contractor shall allow free access to obtain test samples.

I. Methods of Sampling and Testing:

1. Fresh Concrete Sampling: ASTM C 172

2. Specimen Preparation: ASTM C 31

3. Compressive Strength: ASTM C 39

4. Air Content: ASTM C 231

5. Slump: ASTM C 143

6. Temperature: ASTM C 1064

7. Unit Weight: ASTM C 138

8. Obtaining Drilled Cores: ASTM C 42

9. Drying Shrinkage: ASTM C 157

J. Acceptance of Structure: Acceptance of completed concrete work requires conformance with dimensional tolerances, appearance and strength as indicated or specified.

K. Hot weather concrete to conform to ACI 305 and as specified herein.

L. Cold weather concrete to conform to ACI 306 and as specified herein.

M. Reject concrete delivered to job site that exceeds the time limit specified.

N. Reject concrete delivered to job site that exceeds the concrete temperature limitations specified.

O. Do not place concrete in water or on frozen or uncompacted ground.

1.06 WORKABILITY:

A. Concrete shall be of such consistency and composition that it can be worked readily into the forms and around the reinforcement without excessive vibrating and without permitting the materials to segregate or free water to collect on the surface.

1.07 DELIVERY, STORAGE, AND HANDLING:

A. Provide in conformance with Section 01610 and as specified herein.

B. Deliver concrete to discharge locations in watertight agitator or mixer trucks without altering the specified properties of water- cementitious materials ratio, slump, air entrainment, temperature and homogeneity.

C. Reject concrete not conforming to specification, unsuitable for placement, exceeding the time or temperature limitations or not having a complete delivery batch ticket.

1.08 SITE CONDITIONS:

A. Do not place concrete until conditions and facilities for making and curing control test specimens are in compliance with ASTM C 31 and as specified herein.

PART 2 - PRODUCTS

2.01 MATERIALS:

A. All products shall be certified for drinking water systems exposure in accordance with NSF / ANSI 61.

B. Cement:

1. Portland cement, ASTM C150, Type II; or blended hydraulic cement, ASTM C595, Type IP (MS).

2. Use only one brand of cement in any individual structure. Use no cement that has become damaged, partially set, lumpy, or caked. Reject the entire contents of the sack or container that contains such cement. Use no salvaged or reclaimed cement.

3. Maximum tricalcium aluminate shall not exceed 8 percent. The maximum percent alkalis shall not exceed 0.6 percent.

C. Fly Ash:

1. The use of fly ash is prohibited.

D. Slag Cement:

1. The use of slag cement is prohibited.

E. Silica Fume:

1. The use of silica fume is prohibited.

F. Metakaolin:

1. The use of metakaolin is prohibited.

G. Fine Aggregates:

1. Clean, sharp, natural sand conforming to requirements of ASTM C33 with a fineness modulus between 2.50 and 3.0.

2. Confirm aggregates intended for use in concrete do not contain pyrrhotite or other deleterious materials by petrographic testing.

3. Test conformity of aggregate and confirm that aggregates intended for use in concrete are potentially non-reactive when tested in conformance with ASTM C1260, ASTM C1293 or ASTM C1567.

4. Coarse aggregates shall be supplied to an ANSI accredited lab, accompanied by the appropriate chains-of-custody and tested for regulated metals and gross alpha radionuclides. Testing shall be conducted by an ANSI accredited product certification body for Drinking Water Quality.

H. Coarse Aggregate:

1. Well graded crushed stone, natural rock conforming to requirements of ASTM C33.

2. Limit deleterious substances in accordance with ASTM C33, Table 3, Severe Weathering Regions, limit clay lumps not to exceed 5.0 percent by weight, and limit loss when tested for soundness using magnesium sulfate to 12 percent.

3. Test conformity of aggregate and confirm that aggregates intended for use in concrete are potentially non-reactive when tested in conformance with ASTM C1260, ASTM C1293 or ASTM C1567.

4. Confirm aggregates intended for use in concrete do not contain pyrrhotite or other deleterious materials by petrographic testing.

5. Coarse aggregates shall be supplied to an ANSI accredited lab, accompanied by the appropriate chains-of-custody and tested for regulated metals and gross alpha radionuclides. Testing shall be conducted by an ANSI accredited product certification body for Drinking Water Quality.

I. Water and Ice:

1. Use water and ice free from injurious amounts of oil, acid, alkali, salt, organic matter or other deleterious substances and conforms to requirements of ASTM C1602.

2. Water shall not contain more than 500 mg/L of chlorides or more than 500 mg/L of sulfate.

3. Heat or cool water to obtain concrete temperatures specified, and in conformance with ACI 305.1 and ACI 306.1.

J. Color Additive for Exterior Electrical Duct Encasement:

1. For exterior electrical duct concrete encasements, use a color additive for identification purposes.

K. Concrete Admixtures:

1. Maintain compressive strength and maximum water-cementitious materials ratios specified in Table 03300-2 when using admixtures. Include all admixtures in solution form in the water-cementitious materials ratio calculations. Do not use any admixture that contains intentionally-added chlorides or other corrosive elements. Admixtures shall be used in compliance with the manufacturer's printed instructions. The manufacturer shall certify the compatibility of multiple admixtures used in the same mix. Do not use admixtures in greater dosages than recommended by manufacturer.

2. Air Entrainment:

a. Air-entraining admixture shall conform to ASTM C260.

b. Products:

(1) Master Builders Solutions – MasterAir AE Series

(2) Sika Corporation, AER.

(3) WR Grace & Co.; Darex II-AEA

(4) Or accepted equivalent product.

c. Adjust the admixture content to accommodate fly ash or other pozzolan requirements, and other admixtures when used, in order to obtain the specified air content.

3. Water Reducing:

a. Water-reducing admixture shall conform to ASTM C494, Type A and be compatible with the air-entraining admixture.

b. Products:

(1) Master Builders Solutions; MasterPozzolith Series or MasterPolyHeed Series

(2) Sika Corporation, Plastocrete 161

(3) WR Grace & Co.; Daracem 65

(4) Euclid Chemical Company; Eucon NW

(5) Or accepted equivalent product.

4. Water Reducing and Retarding:

a. Water-reducing and retarding admixture shall conform to ASTM C494, Type D and compatible with the air-entraining admixture.

b. Products:

(1) Master Builders Solutions; MasterSet R Series or MasterSet DELVO VO Series

(2) Sika Corporation; Plastiment

(3) WR Grace & Co.; WRDA 64

(4) Or accepted equivalent product.

5. Accelerating:

a. Accelerating admixture shall conform to ASTM C494, Type C or E.

b. Products:

(1) Master Builders Solutions; MasterSet AC 534 or MasterSet FP 20

(2) WR Grace & Co.; Lubricon NCA or Polarset

(3) Euclid Chemical Company: Accelguard NCA

(4) Or accepted equivalent product.

6. High-Range Water-Reducing Admixture (Superplasticizer):

a. High-Range water-reducing admixture shall conform to ASTM C494, Type F or ASTM C1017, Type I.

b. Products:

(1) Master Builders Solutions; MasterRheobuild 1000 or MasterGlenium Series

(2) WR Grace & Co.; Daracem 100

(3) Euclid Chemical company; Eucon SPC

(4) Or accepted equivalent product.

7. Workability-Retaining Admixture:

a. Workability-enhancing admixture shall conform to ASTM C 494, Type S.

b. Products:

(1) Master Builders Solutions; MasterSure Z 60

(2) WR Grace & Co.; Adva XT2

(3) Or accepted equivalent product.

8. Shrinkage Reducing Admixture:

a. Shrinkage-reducing admixture is permitted to be used in the mix to meet shrinkage limitations provided that specified strength are met and there is no reduction in sulfate resistance and no increase in permeability. Quantity of shrinkage-reducing admixture used in the mix shall be added to the quantity of water for purposes of determining the water/cementitous materials ratio.

b. Products:

(1) Master Buildings Solutions; MasterLIFE SRA 20

(2) WR Grace & Co.; Eclipse 4500

(3) Euclid Chemical company; Eucon SRA

(4) Or accepted equivalent product.

L. Fiber Reinforcement:

1. Fiber reinforcing shall conform to ASTM C 1116, Type III.

2. Fibers shall be 100 percent virgin polypropylene fibrillated fibers containing no reprocessed olefin materials and specifically manufactured to an optimum gradation for use as concrete secondary reinforcement

3. Dosage Rate: Volume of fibers shall be a minimum of 3 pounds per cubic yard.

4. Physical Characteristics:

   a. Specific gravity: 0.91

   b. Tensile strength: 40,000 to 110,000 psi

   c. Minimum Fiber length: 1/2 inch

5. Fibrous concrete reinforcement materials provided in this section shall produce concrete conforming to the requirements for strength of concrete specified.

   a. Products:

      (1) Master Builders Solutions; MasterFiber MAC Series

      (2) WR Grace & Co.; STRUX 90/40

      (3) Propex Operating Company,LLC; Enduro 600

      (4) Or accepted equivalent product.

M. Epoxy Bonding Agent:

1. Epoxy bonding agent shall conform to ASTM C881 Type I, II, IV or V; Grade 2 for epoxy resin adhesives, depending on the application. The class of epoxy bonding agent shall be suitable for all ambient and substrate temperatures.

2. Products:

   a. Sika Corp.; Sikadur 32 Hi-Mod

   b. Euclid Chemical Company; Duralcrete

   c. Master Builders Solutions; MasterEmaco ADH 326

   d. Or accepted equivalent product

N. Vapor Retarder: 10 mil polyethylene sheet conforming to ASTM E 154

O. Curing Compound:

1. Liquid form, which will form impervious membrane over, exposed surface of concrete when applied to fresh concrete by means of spray gun. Compound shall not inhibit future bond of floor covering or concrete floor treatment. Use Type I-D compound with red fugitive dye, Class B, having 18 percent minimum solids conforming to ASTM C 309.

2. Provide a copy of manufacturer's certification that the curing compound meets the requirements of ANSI/NSF 61 for concrete surfaces that will be in contact with potable water.

3. Products:

a. Master Builders Solutions; MasterKure CC 1315

b. Euclid Chemical Company; Super Diamond Clear VOX

c. W. R. Meadows, Inc.; VOCOMP-30

d. Dayton Superior Corp; Safe Cure and Seal 30% J23UV

e. Or accepted equivalent product.

P. Burlap Mats:

1. Conform to AASHTO M182.

Q. Sisal-Kraft Paper and Polyethylene Sheets for Curing:

1. Conform to ASTM C171.

2.02 MIXES:

A. Conform to ASTM C94, except as modified by these specifications.

B. Air content as determined by ASTM C231:

5 ± 1 1/2 percent for concrete using 1-1/2 inch maximum aggregate size.

6 ± 1 1/2 percent for concrete using 3/4 inch maximum aggregate size.

C. Provide minimum cementitious material content as follows in Table 03300-1:

Table 03300-1		
Nominal Maximum Aggregate Size (in.)	**Coarse Aggregate (ASTM C 33) Size No.**	**Minimum Cementitious Materials (lb/yd^3)**
1 - 1/2	467	515
3/4	67	560
3/8	8	600

D. Provide concrete with the following compressive strengths at 28 days and proportion it for strength and quality requirements in accordance with ACI 318 and ACI 350. The resulting mix shall not conflict with limiting values specified in Table 03300-2.

Table 03300-2		
Type of Work	**28-Day Minimum Compressive Strength (in psi)**	**Maximum Water/Cement Ratio**
Concrete for structures	5,000	0.40
Precast concrete	5,000	0.40
Concrete (fiber reinforced) fill, topping and miscellaneous unreinforced concrete	4,000	0.44
Concrete not otherwise specified	4,000	0.44

E. Measure slump in accordance with ASTM C143:

1. Proportion and produce the concrete to have a maximum slump of 4 inches. A tolerance of up to 1 inch above the indicated maximum is allowed for individual batches provided the average for all batches or the most recent 10 batches tested, whichever is fewer, does not exceed the maximum limit. Concrete of lower than usual slump may be used provided it is properly placed and consolidated.

2. Mixes containing water reducers shall have a maximum slump of 6 inches after the addition of a mid-range water reducer and maximum slump of 8 inches after the addition of a high range water reducer.

F. Aggregate Size:

1. The maximum aggregate size shall be:

   a. 1-½ inches for walls greater than 18 inches in thickness, grade beams, footings, foundation mats, and base slabs.

   b. 3/8 inches for floor fill in clarifiers, in congested areas where approved by the engineer, for fireproofing around structural steel beams and columns and to fill cored holes.

c. 3/4 inches for all other concrete.

2. Combined aggregate grading shall be as specified in Table 03300-3:

Table 03300-3				
Maximum Aggregate Size	1-1/2"	1"	3/4"	3/8"
Aggregate Grade per ASTM C33	467	57	67	8

PART 3 - EXECUTION

3.01 INSPECTION:

A. Contractor shall examine the substrate and the conditions under which work is to be performed and notify the Engineer in writing of unsatisfactory conditions. Do not proceed with the work until unsatisfactory conditions are corrected in a manner acceptable to the engineer.

3.02 MIXING AND TRANSPORTING CONCRETE:

A. General: Conform to concreting procedures set forth in ASTM C 94, ACI 304R and as specified herein.

1. Transport concrete to discharge locations without altering the specified properties of water-cement ratio, slump, air entrainment, temperature and homogeneity.

2. Discharge concrete into forms within 1-1/2 hours after cement has entered mixing drum or before the drum has revolved 300 revolutions after the addition of water, whichever occurs first.

3. Do not add water at the jobsite unless permitted by the engineer. If it is necessary to add water to obtain the specified slump, add water per ASTM C 94, but do not exceed the amount of water that has been held back at the plant. Added water shall be incorporated by additional mixing of at least 35 revolutions. Quality control sampling shall be done after the water has been added and the batch thoroughly mixed.

4. Do not add water to concrete containing high range water reducing admixture.

5. Keep a record showing time and place of each placement of concrete, together with transit-mix delivery slips certifying the contents of the placement.

Discharge of concrete shall be completed within the limits set out in Table 03300-4.

Table 03300-4	
MAXIMUM TIME TO CONCRETE DISCHARGE	
Concrete Temperature	**Limit**
Over 90 Degree F	Remove concrete from jobsite and discard concrete
Below 90 Degree F	90 minutes

B. Conveying: Convey concrete from agitator or mixer truck to place of final deposit in forms by one of the following methods:

1. Buckets or hoppers with discharge gates having a clear opening equal to not less than one-third the maximum interior horizontal area or five times the maximum aggregate size being used, whichever is greater, and side slopes of not less than 60 degrees to horizontal.

2. Buggies or wheelbarrows equipped with pneumatic tires.

3. Round bottom, metal or metal-lined chutes with inclined slope of between two to three feet horizontally to one foot vertically and of sufficient capacity to avoid overflow.

4. Circular drop pipes with a top diameter of at least eight times the maximum aggregate size, but not less than 6 inch, or tapered to not less than six times maximum aggregate size.

3.03 CONCRETE ACCEPTANCE:

A. The Contractor shall accept or reject each batch of concrete delivered to the point of agitator or mixer truck discharge. The signature of a Contractor's authorized representative on the delivery batch ticket shall indicate concrete acceptance.

B. The Contractor shall reject concrete delivered without a complete concrete delivery batch ticket as specified herein. The concrete supplier will furnish copies of the signed batch ticket to the Contractor and Engineer.

C. The testing agency shall perform field tests at the point of agitator or mixer truck discharge. Accept or reject concrete on the basis of conformity with slump, air content and temperature specified.

D. The testing agency shall inspect concrete transit truck's barrel revolution counter and gauge for measuring water added to the concrete. Reject concrete which exceeds the maximum barrel revolution of 300, the limits in Table 03300-4 or concrete that has water content exceeding the specified water-cement ratio.

E. The Contractor shall reject concrete not conforming to specification before discharging into the forms.

3.04 PREPARATION AND COORDINATION:

A. Contractor shall notify the Engineer or the Engineer's Representative of readiness to place concrete in any portion of the work a minimum of 48 hours prior to concrete placement. Failure to provide this notification will be cause for delay in placing until inspections can be completed and arrangements for testing established.

B. All reinforcement, installation of waterstop, positioning of embedded items, and condition of formwork shall be inspected by the Engineer or the Engineer's representative prior to concrete placement.

C. Coordinate the sequence of placement to assure that construction joints will occur only where indicated on the drawings.

D. Schedule sufficient equipment for continuous concrete placement. Provide for backup equipment and procedures to be implemented in case of an interruption in placement.

E. Compact the subbase and/or bedding. The subbase and/or bedding shall be uniformly moist at the time of concrete placement. Spraying water on the subbase and/or bedding may be necessary prior to placement of concrete. Concrete shall not be placed on standing water, mud, and foreign matter.

F. Provide mud slabs to obtain a dry and stable working platform for placement of slabs on grade and foundation mats as indicated on the drawings or as may be required.

G. Install a granular base beneath slabs on ground where shown on contract drawings, Place granular material on a compacted subgrade and compact the granular base.

H. Place vapor retarder under structural slabs and buildings and where shown on contract drawings. Install material with 6 inch lap at joints and seal joints with tape as recommended by the vapor retarder manufacturer. Tape material cut for slab penetrations to the pipe, conduit or other items passing through the slab. Use tape recommended by the vapor retarder manufacturer.

I. Install vapor retarder without punctures or tears and protect against punctures and breaks.

J. Where concrete is required to be placed and bonded to existing concrete, coat the contact surfaces with epoxy bonding agent. The method of preparation and application of the bonding agent shall conform to the manufacturer's recommendations.

3.05 JOINTS AND EMBEDDED ITEMS

A. Provide construction and expansion joints as specified in Section 03250:

1. Clean all construction joints to remove loose concrete and laitance before placing adjoining concrete. Do not damage exposed concrete edges, key grooves, waterstops or reinforcement.

2. Intentionally roughen surfaces of set concrete to receive new concrete to 1/4" amplitude in a manner to expose bonded aggregate uniformly at joints.

3. Do not place concrete against construction joints for at least 72 hours after initial concrete set.

B. Embedded Items:

1. Secure castings, inserts, conduits and other metalwork encased in concrete to prevent them from being displaced or deformed during concrete work. Use templates to secure items in place.

2. Clean embedded items of oil and all foreign matter.

3. Install inserts, anchors, sleeves and other items into formwork where indicated or specified under other sections of these specifications.

4. Aluminum embedded in concrete shall be coated to prevent galvanic corrosion with a zinc chromate primer and one of the following products:

a. Bitumastic Super Service Black by Koppers Co., Inc.

b. Tarmastic 100 by Porter Coatings Division, Porter Paint Co.

c. 450 Heavy Tnemecol by Tnemec Company.

d. Or accepted equivalent product.

5. Check location and support of piping, electrical conduits and other embedded items before depositing concrete. Correct locations as required and secure in place.

6. Complete required tests on embedded piping before starting concrete placement.

C. Embedded Pipes And Conduit:

1. Embedded pipes and conduit in concrete shall conform to the requirements and limitations of ACI 318, ACI 350 and these specifications and shall be as approved by the engineer.

2. Conduits, pipes, and sleeves of any material not harmful to concrete and within the limitations specified herein shall be permitted to be embedded in concrete with the approval of the Engineer.

3. Conduits and pipes of aluminum shall not be embedded in concrete.

4. Pipes passing through walls of a liquid-containing structure shall include an integral waterstop.

5. Conduits, pipes, and sleeves passing through a slab, wall, or beam shall not significantly impair the strength of the construction.

6. Conduits and pipes, with their fittings, embedded within a column shall not displace more than 4 percent of the area of cross section.

7. Except when drawings for conduits and pipes are approved by the structural engineer, conduits and pipes embedded within a slab, wall, or beam (other than those merely passing through) shall satisfy the following:

   a. Conduits and pipes shall not be larger in outside dimension than 1/3 the overall thickness of the slab, wall, or beam in which they are embedded.

   b. Conduits and pipes shall not be spaced closer than 3 times the outside diameters on center.

   c. Conduits and pipes shall be placed within the middle third of the element and between reinforcement layers. Do not install runs of piping or conduit between formwork and reinforcement.

   d. Avoid crossing pipes and conduit in concrete.

8. Pipes and fittings shall be designed to resist the effects of the material, pressure, and temperature to which they will be subjected.

9. No liquid, gas, or vapor, except water not exceeding 90 F or 50 psi pressure, shall be placed in the pipes until the concrete has attained its design strength.

10. Reinforcement with an area not less than 0.002 times area of concrete section shall be provided perpendicular to piping or conduit at a maximum spacing of 12 inches.

11. Piping and conduit shall be so fabricated and installed that cutting, bending, or displacement of reinforcement from its proper location will not be required.

12. Close ends of conduits, piping and sleeves embedded in concrete with caps or plugs prior to concrete placement.

3.06 CONCRETE PLACEMENT:

A. Placement shall conform to ACI 304R as modified by these specifications.

B. Intentionally roughen surfaces of set concrete to receive new concrete to ¼" amplitude in a manner to expose bonded aggregate uniformly at joints.

C. Do not place adjacent sections of walls and slabs until seven days after placement of the previously placed concrete.

D. Do not place concrete until all free water has been removed from the forms, clear of the work. Do not permit free or storm water to flow over surfaces of concrete so as to injure the quality or surface finish.

E. Do not place concrete during inclement weather. Protect concrete placed from inclement weather. Keep sufficient protective covering ready at all times for this purpose.

F. Deposit concrete at or near its final position to avoid segregation caused by rehandling or flowing. Do not deposit concrete in large quantities in one place to be worked along the forms with a vibrator.

G. Deposit concrete continuously and in level layers 1 to 2 feet thick. Avoid inclined layers and cold joints. Place concrete at lower portion of slope first on sloping surfaces.

H. Do not deposit partially hardened concrete in forms. Retempering of partially hardened concrete is not permitted. Remove all partially hardened concrete from site at no additional compensation.

I. Do not allow concrete to fall freely in forms to cause segregation (separation of coarse aggregate from mortar). Limit maximum free fall of concrete to 4 feet. Do not move concrete horizontally more than four feet from point of discharge. Space points of deposit not more than eight feet apart.

J. At least two hours shall elapse after depositing concrete in the columns or walls before depositing in beams, girders, or slabs supported thereon. Place beams, girders, brackets, column capitals, and haunches monolithically as part of the floor or roof system, unless otherwise shown on contract drawings.

K. Consolidate concrete using mechanical vibrators operated within the mass of concrete and/or on the forms conforming to procedures set forth in ACI 309R and as specified herein.

L. Conduct vibration to produce concrete of uniform texture and appearance, free of honeycombing, streaking, cold joints or visible lift lines.

M. Conduct vibration in a systematic manner with regularly maintained vibrators. Furnish sufficient backup units at job site. Use vibrators having minimum frequency of 8,000 vibrations per minute and of sufficient amplitude to consolidate concrete. Use not less than one vibrator with crew for each 35 to 40 cubic yards of concrete placed per hour.

N. Insert and withdraw vibrator vertically at a uniform spacing over the entire area of placement. Space distances between insertions such that spheres of influence of each insertion overlap.

O. Use additional vibration with pencil vibrators on vertical surfaces and on all exposed concrete to bring full surface of mortar against the forms so as to eliminate air voids, bug holes and other surface defects. Employ the following additional procedures for vibrating concrete as necessary to maintain proper consolidation of concrete:

1. Reduce distance between internal vibration insertions and increase time for each insertion.

2. Insert vibrator as close to face of form as possible without contacting form or reinforcement.

3. Thoroughly vibrate area immediately adjacent to waterstops without damaging the waterstop.

4. Use spading as a supplement to vibration where particularly difficult conditions exist.

P. Pumping Concrete:

1. Conform to the recommendations of ACI 304.2R except as modified herein.

2. Use equipment and procedures and schedule deliveries to maintain steady flow of concrete at the discharge end of pipe.

3. Maintain concrete properties of slump, air content and temperature. Make adjustments in concrete proportions as necessary to provide concrete properties in accordance with the approved concrete design mix and as specified herein.

4. Use pipe with inside diameter of at least three times the maximum coarse aggregate size, but not less than 4 inches.

5. Do not use aluminum pipes for delivery of concrete to the forms.

6. Take samples at the point of agitator or mixer truck discharge.

7. Furnish labor and assistance as required by the testing laboratory in obtaining and handling test specimens.

3.07 CURING AND PROTECTION:

A. General:

1. Protect concrete from premature drying, hot or cold temperatures, and mechanical injury, beginning immediately after placement and maintain concrete with minimal moisture loss at relatively constant temperature.

2. Comply with curing procedures set forth in ACI 301, ACI 308.1 and as specified herein.

3. Perform hot weather concreting in conformance with ACI 305.1 and as specified herein when the ambient atmospheric temperature is 80 degrees F or above.

4. Perform cold weather concreting in conformance with ACI 306.1 and as specified herein when the ambient atmospheric temperature is 40 degrees F or below.

5. Concrete required to be moist cured shall remain moist for the entire duration of the cure. Repeated wetting and drying cycles of the curing process will not be allowed.

B. Curing Duration:

1. Start initial curing after placing and finishing concrete as soon as free moisture has disappeared from unformed concrete surfaces. Initial curing starts as soon as concrete achieves final set. Forms left tightly in place are considered as part of the curing system, provided that wooden forms are kept continuously moist. Keep continuously moist for not less than 72 hours.

2. Begin final curing procedures immediately following initial curing and before the concrete has dried. Continue final curing for at least 7 days and in accordance with ACI 301 procedures for a total curing period, initial plus final, of at least 10 days.

3. Avoid rapid drying at the end of the final curing period

C. Curing Requirements:

1. Unformed Surfaces: Cover and cure entire surface of newly placed concrete immediately after completing finishing operations and water film has evaporated from surface or as soon as marring of concrete will not occur. Protect finished slabs from direct rays of the sun to prevent checking, crazing and plastic shrinkage.

2. Formed Surfaces: Minimize moisture loss for formed surfaces exposed to heating by the sun by keeping forms wet until safely removed. Keep surface continuously wet by warm water spray or warm water saturated fabric immediately following form removal.

3. Liquid containing and below grade structures: Moist cure by the application of water to maintain the surface in a continually wet condition. Use water that is free of impurities that could etch or discolor exposed concrete surfaces.

4. Other concrete: Moist cure by moisture-retaining cover curing, or by the use of curing compound.

D. Curing Methods:

1. Water Curing: Use water curing for unformed surfaces. Continuously water cure all exposed concrete for the entire curing period. Provide moisture curing by any of the following methods:

a. Keeping the surface of the concrete continuously wet by ponding or immersion.

b. Continuous water-fog spray or sprinkling.

c. Covering the concrete surface with curing mats, thoroughly saturating the mats with water, and keeping the mats continuously wet with sprinklers or porous hoses. Place curing mats so as to provide coverage of the concrete surfaces and edges, with a 4-inch lap over adjacent mats. Weight down the curing cover to maintain contact with the concrete surface, as necessary.

2. Sealing Materials:

a. Use common sealing materials such as plastic film or waterproofing (kraft) paper when permitted by the Engineer.

b. Lap adjacent sheets a minimum of 12 inches. Seal edges with waterproof tape or adhesive. Use sheets of sufficient length to cover sides of concrete member.

c. Place sheet materials only on moist concrete surfaces. Wet concrete surface with fine water spray if the surface appears dry before placing sheet material.

d. The presence of moisture on concrete surfaces at all times during the prescribed curing period is proof of acceptable curing using sheet material.

3. Membrane Curing Compound:

a. Apply membrane-curing compound uniformly over concrete surface by means of roller or spray at a rate recommended by the curing compound manufacturer, but not less than 1 gallon per 150 sq. ft. of surface area. Agitate curing material in supply container immediately before transfer to distributor and thoroughly agitate it during application for uniform consistency and dispersion of pigment

b. Do not use curing compounds on construction and expansion joints or on surfaces to receive liquid hardener, dustproofer/sealer, concrete paint, tile, concrete fills and toppings or other applications requiring positive bond.

c. Reapply membrane-curing compound to concrete surfaces that have been subjected to wetting within 3 hours after curing compound has been applied by method for initial application.

E. Protection from environmental conditions: Maintain the concrete temperature above 50 degrees F continuously throughout the curing period. Make arrangements before concrete placing for heating, covering, insulation or housing as required to maintain the specified temperature and moisture conditions continuously for the curing period.

1. When the atmospheric temperature is 80 degrees F and above, or during other climatic conditions which will cause too rapid drying of the concrete, make arrangements before the start of concrete placing for the installation of wind breaks or shading, and for fog spraying, wet sprinkling, or moisture-retaining covering.

2. Protect the concrete continuously for the entire curing period.

3. Maintain concrete temperature as uniformly as possible and protect from rapid atmospheric temperature changes.

4. Avoid temperature changes in concrete that exceed 5 degrees F in any one hour and 50 degrees F in any 24-hour period.

F. Protection from physical injury: Protect concrete from physical disturbances such as shock and vibration during curing period. Protect finished concrete surfaces from damage by construction equipment, materials, curing procedures and rain or running water. Do not load concrete in such a manner as to overstress concrete.

G. Protection from Deicing Agents: Do not apply deicing chemicals to concrete.

3.08 FIELD QUALITY CONTROL:

A. Hot Weather Requirements

1. During hot weather, give proper attention to ingredients, production methods, handling, placing, protection, and curing to prevent excessive concrete temperatures or water evaporation in accordance with ACI 305.1 and the following.

2. When the weather is such that the temperature of the concrete as placed would exceed 90 degrees F, use ice or other means of cooling the concrete during mixing and transportation so that the temperature of the concrete as placed will not exceed 90 degrees F.

3. Take precautions when placing concrete during hot, dry weather to eliminate early setting of concrete. This includes protection of reinforcing from direct sunlight to prevent heating of reinforcing, placing concrete during cooler hours of the day, and the proper and timely application of specified curing methods.

4. There will be no additional reimbursement to the Contractor for costs incurred for placing concrete in hot weather.

B. Cold Weather Requirements

1. Provide adequate equipment for heating concrete materials and protecting concrete during freezing or near-freezing weather in accordance with ACI 306.1 and the following.

2. When the temperature of the surrounding atmosphere is 40 degrees F or is likely to fall below this temperature, use heated mixing water not to exceed 140 degrees F. Do not allow the heated water to come in contact with the cement before the cement is added to the batch.

3. When placed in the forms during cold weather, maintain concrete temperature at not less than 55 degrees F. All materials shall be free from ice, snow, and frozen lumps before entering the mixer.

4. Maintain the air and the forms in contact with the concrete at temperatures above 40 degrees F for the first five days after placing, and above 35 degrees F for the remainder of the curing period. Provide thermometers to indicate the ambient temperature.

5. There will be no additional reimbursement made to the Contractor for costs incurred for placing concrete during cold weather.

C. Backfill Against Walls

1. Do not place backfill against walls until the concrete has obtained a compressive strength equal to the specified 28-day compressive strength. Where backfill is to be placed on both sides of the wall, place the backfill uniformly on both sides.

2. Do not backfill the walls of structures that will be laterally restrained or supported by suspended slabs or slabs on grade until the slab is placed and the concrete has reached the specified compressive strength.

D. Concrete Testing

1. Concrete Quality Test Specimen:

a. Perform sampling and curing of test specimen in accordance with ASTM C31.

b. Testing agency personnel will record truck and load number from the delivery batch ticket, the concrete placement location of each specimen, the date, concrete strength, slump, air content and temperature.

c. For each 50 cu. yd. of each mix design of concrete but not less than once a day nor less than once for each 5,000 sq. ft. of surface area of foundation mats, base slabs, footings, pile caps, slabs on grade, grade beams, walls, or elevated slabs, the testing agency will cast a minimum of:

(1) One set of four (4) 6”x12” test specimens or

(2) One set of seven (7) 4”x8” test specimens

d. Once a cylinder size has been selected, the size and number of specimens representing a strength test for each concrete mix shall remain constant.

e. For 6”x12” test cylinders:

(1) The testing agency will compression test one (1) of each set of four 6”x12” specimens at 7 days.

(2) Test two (2) of the remaining cylinders at 28 days for concrete strength acceptance.

(3) The fourth cylinder shall be held for testing at 56 days only if the 28 day cylinder strengths are deficient. The fourth cylinder of each set shall be discarded if the 28 day strengths meet or exceed the specified minimum strength.

f. For 4”x8” test cylinders:

(1) The testing agency will compression test two (2) of each set of seven 4”x8” specimens at 7 days.

(2) Test three (3) of the remaining cylinders at 28 days for concrete strength acceptance.

(3) The last two cylinders shall be held for testing at 56 days only if the 28 day cylinder strengths are deficient. The 6th and 7th cylinders of each set shall be discarded if the 28 day strengths meet or exceed the specified minimum strength.

2. The laboratory firm shall immediately notify the Contractor and the Engineer if the seven day strength is deficient.

3. The acceptance test result is the average of the strengths of the two specimens tested at 28 days.

4. The laboratory firm shall submit compression test results to both the Contractor and the Engineer. Concrete acceptance shall be based on the requirements of ACI 318 and ACI 350.

5. Field cured cylinders conforming to ASTM C31 will be required to determine field compressive strength of concrete. Laboratory cured cylinders for concrete quality testing shall not be used for determining field compressive strength.

E. Concrete Coring:

a. When the concrete quality test specimen compression tests fail to be in compliance with the Contract Documents or when the Engineer detects deficiencies in the concrete, the Contractor will take concrete cores at least 4 inches (100 mm) in diameter from the structure in conformance with ASTM C 42 at locations determined by the Engineer.

b. Obtain at least three representative cores from each member or area of concrete that is considered potentially deficient.

c. Obtain additional cores to replace cores that show evidence of having been damaged subsequent to or during removal from the structure.

d. The testing agency shall compression test the cores taken from the structure in conformance with ASTM C 39 and submit test strength test results of cores specified above to the Contractor and to the Engineer.

e. All costs associated with coring and testing of cores will be borne by the Contractor at no additional cost to the Owner.

3.09 REPAIRS:

A. Provide in accordance with Section 03730.

3.10 CONCRETE FINISHES:

A. Do not use curing compound where epoxy, urethane, mortar bed, grout, additional concrete or other toppings or adhesive will be applied.

B. Do not sprinkle with dry cement or add water when finishing concrete surfaces.

C. Finish concrete surfaces in accordance with the following schedule:

Table 03300-5	
Finish Designation	**Area Applied**
F-1	Beams, columns, and exterior walls not exposed to liquids or view.
F-3	Walls, beams, and columns exposed to view and to 1 foot below liquid level or finished grade. Underside of formed floors or slabs. EXCEPTION: surfaces that are to be coated.
F-4	Exterior and interior surfaces to be coated.
S-3	Slab surfaces on which mechanical equipment moves. Slab surfaces to receive sealer or hardener shall be prepared in accordance with product manufacturer's requirements.
S-4	Slabs and floors exposed to view, which are liquid containing, or are to receive crystalline waterproofing.
S-5	Slabs and floors at slopes greater than 10%, exterior tank top slabs and exterior stairs.
E-1	Exposed edges.
E-2	Top of walls, beams, and similar unformed surfaces.

1. Finish F-1: Repair defective concrete, fill depressions deeper than 1/2-inch, and fill tie holes.

2. Finish F-3: In addition to Finish F-2, fill depressions and airholes with mortar. Dampen surfaces and then spread a slurry consisting of one part cement and one and one-half parts sand by damp loose volume, over the surface with clean burlap pads or sponge rubber floats. Remove any surplus by scraping and then rubbing with clean burlap.

3. Finish F-4: Repair defective concrete, remove fins, fill depressions 1/16-inch or deeper, fill tie holes, remove mortar spatter, and remove bulges higher than 1/16-inch.

4. Finish S-3: Steel trowel finish free from trowel marks and all irregularities.

5. Finish S-4: Steel trowel finish without local depressions or high points. For liquid containing slabs apply a light hair-broom finish. Do not use stiff bristle brooms or brushes. Leave hair-broom lines parallel to the direction of slab drainage.

6. Finish S-5: Steel trowel finish without local depressions or high points. Apply a stiff bristle broom finish. Leave broom lines parallel to the direction of slop drainage.

7. Finish E-1: Provide 3/4 inch chamfer on external corners of exposed concrete walls, beams columns, equipment pads and exposed edges of construction joints. Do not chamfer columns flush with concrete block walls.

8. Finish E-2: Strike smooth and float to an F-3 or F-4 finish.

D. Protect finished concrete surfaces from damage by construction equipment, materials, curing procedures and rain or running water.

3.11 FINISHING OF FORMED SURFACES:

A. Cure surfaces until finishing and repairing are completed.

B. Perform finish work in accordance with the schedule in Table 03300-5 as soon as possible after forms are removed.

C. Conform to the requirements specified in Section 03100 for tolerances for formed surfaces.

3.12 FINISHING OF UNFORMED SURFACES:

A. Perform finish work in accordance with the schedule in Table 03300-5.

B. Provide S-3 steel-trowel finish to all top, horizontal, and inclined surfaces not otherwise specified or indicated. This includes concrete fills and toppings and floors. Provide hand steel-trowel finish to all surfaces such as weirs or walls over which liquids will flow.

C. Provide S-5 broom finish to exterior walkways, exterior stairs, entrance platforms and loading docks.

END OF SECTION

SECTION 03600

GROUT

PART 1 - GENERAL

1.01 DESCRIPTION:

A. Furnish all labor, materials, equipment, and incidentals required, and install grout complete as shown on the Drawings and as specified herein.

1.02 SUMMARY:

A. Section Includes:

1. Material for grouting reinforcing bars, anchor bolts into existing or newly placed concrete.

2. Material for grouting under bearing plates for columns or beams.

3. Materials for grouting under equipment.

4. Materials for grouting under and around steel tanks.

5. Materials for miscellaneous grouting including but not limited to railing posts, equipment guides, bollards, precast concrete joints and supports etc.

1.03 REFERENCE STANDARDS:

A. American Association of State Highway and Transportation Officials (AASHTO):

1. M182: Burlap Cloth made from Jute or Kenaf

B. American Petroleum Institute (API):

1. RP 686: Recommended Practice for Machinery Installation and Installation Design

C. ASTM International (ASTM):

1. C33: Standard Specification for Concrete Aggregates

2. C109: Standard Test Method for Compressive Strength of Hydraulic Cement Mortars (Using 2-in or Cube Specimens)

3. C150: Standard Specification for Portland Cement

4. C531: Test Method for Linear Shrinkage and Coefficient of Thermal Expansion of Chemical Resistant Mortars, Grouts, and Monolithic Surfacings

5. C579 Standard Test Methods for Compressive Strength of Chemical-Resistant Mortars, Grouts, Monolithic Surfacings, and Polymer Concretes

6. C827: Standard Test Method for Change in Height at Early Ages of Cylindrical Specimens from Cementitious Mixes

7. C939 Standard Test Method for Flow of Grout for Preplaced-Aggregate Concrete (Flow Cone Method)

8. C1107: Standard Specification for Packaged Dry, Hydraulic, Cement Grout (Non-shrink)

9. D695: Standard Test Method for Compressive Properties of Rigid Plastics

D. U.S. Army Corps of Engineers Standard (CRD):

1. C621: Corps of Engineers Specification for Non-shrink Grout

E. National Sanitation Foundation (NSF):

1. 61: Drinking Water System Components – Health Effects

1.04 SUBMITTALS:

A. Submit the following shop drawings in accordance with Section 01300.

B. Product Data:

1. Commercially manufactured non-shrink, non-metallic cementitious grout:

a. Include catalog cuts, technical data, storage requirements, product life, working time after mixing, temperature considerations, conformity to referenced ASTM standards, and Material Safety Data Sheet.

2. Commercially manufactured non-shrink epoxy grout:

a. Include catalog cuts, technical data, storage requirements, product life, working time after mixing, temperature considerations, conformity to referenced ASTM Standards and Material Safety Data Sheet.

3. Cement grout:

a. Include the type and brand of the cement, the gradation of the fine aggregate, product data on any proposed admixtures, and the proposed mix of the grout.

4. Concrete grout:

   a. Include data for concrete as delineated in Section 03300. This includes the mix design, constituent quantities per cubic yard, and the water/cement ratio.

5. Bonding Agent:

   a. Include catalog cuts, technical data, storage requirements, product life, working time after mixing, temperature considerations, conformity to referenced ASTM standards, and Material Safety Data Sheet.

C. Laboratory Test Reports.

1. Submit laboratory test data as required under Section 03300 for concrete to be used as concrete grout.

D. Mill test reports for each shipment of cement, regardless of quantity, prior to incorporation into the work.

E. Manufacturer's specifications and instructions for all admixtures, curing materials, adjustable inserts and non-shrink non-metallic grout. Manufacturer’s certification of compatibility of all admixtures.

F. Provide certification that all materials used in grout or the curing and repair of concrete, meet the requirements of ANSI/NSF 61 for contact with potable water.

1.05 QUALITY ASSURANCE:

A. Qualifications

1. Grout manufacturer to have a minimum of 5 years of experience in the production and use of the type of grout proposed for the Work.

B. Field Testing

1. Field testing and inspection services required will be provided by the Owner. Provide assistance in the sampling of materials and provide any ladders, platforms, etc. for access to the Work. Comply with the applicable ASTM Standards for testing.

2. The field testing of concrete grout will be as specified for concrete in Section 03300.

3. Take compression test specimens from the first placement of each type of grout to ensure compliance with these Specifications.

a. Compression tests and fabrication of specimens for cement grout and non-shrink grout will be performed as specified in ASTM C109 at intervals during construction as selected by the Engineer. A set of three specimens will be made for testing one at seven days and two at 28 days.

b. Compression tests and fabrication of specimens for epoxy grout will be performed as specified in ASTM C579, Method B. A set of three specimens will be made for testing at seven days.

1.06 RESPONSIBILITIES:

A. Assist the Owner in obtaining specimens for testing and furnish all materials necessary for fabricating the test specimens.

B. The cost of laboratory tests on grout will be paid by the Owner except where test results show the grout to be defective. In such case, the Contractor shall pay for the tests, removal and replacement of defective work, and re-testing all at no cost to the Owner.

1.07 WARRANTY:

A. Warrant the materials and products specified in this Section against defective materials and workmanship with the manufacturer’s standard warranty, but for no less than one year from the date of substantial completion.

B. Warrant the work against defects for one year from the date of substantial completion.

1.08 DELIVERY, STORAGE, AND HANDLING:

A. Comply with the requirements in Section 01610.

B. Deliver materials to the jobsite in original, unopened packages, clearly labeled with the manufacturer's name, product identification, batch numbers, and printed instructions.

C. Store materials in accordance with the manufacturer's recommendations. Total storage time from date of manufacture to date of installation shall be limited to six months or the manufacturer's recommended storage time, whichever is less.

D. Reject material that becomes damp, lumpy or otherwise unacceptable and immediately remove from the site and replace with acceptable material at no cost to the Owner.

E. Deliver non-shrink cement based grouts as pre-blended, prepackaged mixes requiring only the addition of water.

F. Deliver non-shrink epoxy grouts as premeasured, prepackaged, three component systems requiring only blending as directed by the manufacturer.

PART 2 - PRODUCTS

2.01 GENERAL:

A. Provide materials produced by one manufacturer or supplier in order to provide standardization of appearance.

2.02 APPLICATION:

A. Unless indicated otherwise, provide grouts as listed below:

Table 03600-1

Type of Grout	Application
Cement Grout	Surface repairs
Non-Shrink – Class I	Storage tanks and other non-motorized equipment.
	Filling block-out spaces for embedded items such as railing posts, gate guide frames, etc. (Where placement time is less than 20 min.).
	Repair of holes and defects in concrete members that are not water bearing and not in contact with soil or other fill material.
Non-Shrink – Class II	
	Filling block-out spaces for embedded items such as railing posts, gate guide frames, etc. (where placement time exceeds 20 min.)
Non-Shrink Epoxy	Machinery subject to severe shock loads and high vibration.
Concrete Grout	Toppings and concrete/grout fill.

2.03 MATERIALS:

A. Non-shrink Class I Grout:

1. Non-shrink Class I Grout shall have a minimum 28-day compressive strength of 5,000 psi, when mixed at a fluid consistency.

2. Non-shrink Class I grout shall meet the requirements of ASTM C1107, Grade B or C, when mixed to fluid, flowable and plastic consistencies.

3. Products:

a. Sika Corporation; SikaGrout 212

b. BASF Corporation; MasterFlow 713

c. Euclid Chemical Company; Euco NS

d. Or acceptable equivalent product.

B. Non-shrink Class II Grout:

1. Non-shrink grout shall be a high precision, fluid, extended working time grout. The minimum 28-day compressive strength shall be 7,500 psi, when mixed at a fluid consistency.

2. Grout shall have an extended working time of 30 minutes minimum when mixed to a fluid consistency as defined in ASTM C827 at temperature extremes of 45 to 90 degrees F in accordance with ASTM C1107.

3. Non-shrink grouts shall meet the requirements of ASTM C1107; Grade B or C when tested using the amount of water needed to achieve fluid consistency per ASTM C939.

4. The grout when tested shall not bleed or segregate at maximum allowed water.

5. Products:

a. BASF Corporation; Masterflow 928

b. Euclid Chemical Co.; Hi-Flow Grout

c. Sika Corporation; SikaGrout 212

d. Or acceptable equivalent product.

C. Cement Grout:

1. Cement grouts shall be a mixture of one part Portland cement conforming to ASTM C150 types I, II, or III and one to two parts sand conforming to ASTM C33 with sufficient water to place the grout. The water content shall be sufficient to impart workability to the grout, but not to the degree that it will allow the grout to flow.

2. Cement grout materials shall be as indicated in section 03300 cast-in-place concrete.

D. Concrete Grout:

1. Concrete grout shall conform to the requirements of Section 03300 except as specified herein. Proportion with cement, coarse and fine aggregates, water, water reducer, and air entraining agent to produce a mix having an average strength of

4,000 psi at 28 days. Coarse aggregate size shall be 3/8-inch maximum. Keep the W/C ratio as low as practical while still retaining sufficient workability.

E. Non-shrink epoxy-based grout:

1. Provide a pre-proportioned, three component, 100 percent solids system consisting of epoxy resin, hardener, and blended aggregate. It shall have a compressive strength of 14,000 psi in seven days when tested in conformity with ASTM D695 and have a maximum thermal expansion of 30 x 10^{-6} when tested in conformity with ASTM C531.

2. Products:

a. BASF Corporation; MasterFlow 648

b. Five Star Products, Inc.; HP Epoxy Grout

c. Sika Corporation; Sikadur 42 Grout-Pak

d. Euclid Chemical Company; High Strength Epoxy Grout

e. Or acceptable equivalent product.

F. Dry Pack Grout:

1. Dry pack (to be packed or tamped in place) shall be mixed to a zero slump consistency.

2. When mixing the batch, add only enough water to the dry materials to produce a rather stiff mixture. Additions of water shall be made in small increments until the desired consistency is obtained.

G. Non-epoxy Bonding Compound:

1. Provide non-epoxy bonding compound that is re-wetable for up to two weeks.

2. Products:

a. Larsen Products Corporation; Weld-Crete

b. Sta-Dry Manufacturing Corporation; Link

c. Euclid Chemical Company; Euco Weld

d. Or acceptable equivalent product.

2.04 CURING MATERIALS:

A. Curing materials for cement grout shall be as specified in Specification 03300 and as recommended by the manufacturer for prepackaged grouts.

PART 3 - EXECUTION

3.01 GENERAL:

A. Grout shall not be placed until base concrete or masonry has attained its design strength.

B. Prepare surfaces for curing, and protection of cement grout in accordance with Section 03300 Cast-in-Place Concrete.

C. Shade the work sites from sunlight for at least 24 hours before and 48 hours after grouting.

D. Contact the grout manufacturer's representative for assistance on hot and cold weather grouting techniques and precautions if applicable.

3.02 PREPARATION:

A. Clean concrete surfaces to receive grout free of ice, frost, dirt, grease, oil, curing compounds, laitance and paints, and free of all loose or unsound material or foreign matter that may affect the bond or performance of the grout.

B. Roughen concrete surfaces by chipping, sandblasting, or other mechanical means to ensure bond of the grout to the concrete. Remove loose or broken concrete. Irregular voids or projecting coarse aggregate need not be removed if they are sound, free of laitance and firmly embedded into the parent concrete.

C. Remove all loose rust, oil or other deleterious substances from metal embedments prior to the installation of the grout.

D. Wash concrete surfaces clean and keep them moist for at least 24 hours prior to the placement of cementitious or cement grout. Saturate by covering the concrete with a plastic sheet or using either a soaker hose, flooding the surface or other method acceptable to the Engineer. Remove visible water from the surface upon completion of the 24-hour period prior to grouting. Use an accepted adhesive bonding agent in lieu of surface saturation when accepted by the Engineer for each specific location of grout installation.

E. Epoxy based grouts do not require the saturation of the concrete substrate. Surfaces in contact with epoxy grout shall be completely dry before grouting.

F. Construct grout forms or other leak proof containment. Forms shall be lined or coated with release agents recommended by the grout manufacturer.

G. Support equipment during alignment and installation of grout by shims, wedges, blocks, or other accepted means. Prevent the shims, wedges, and blocking devices from bonding to the grout by appropriate bond breaking coatings and remove them after grouting unless otherwise accepted by the Engineer.

3.03 GROUTING MACHINERY FOUNDATIONS:

A. After the machinery has been set in position and placed at the proper elevation by steel wedges, the space between the bottom of the machinery base and the original placement of concrete shall be filled with a pourable non-shrink grout. Grout and grouting procedure shall be in accordance with API 686.

3.04 INSTALLATION:

A. Cement Grouts and Non-shrink Cementitious Grouts:

1. Mix in accordance with manufacturer's recommendations. Do not add cement, sand, pea gravel, or admixtures without prior approval by the grout manufacturer and the Engineer.

2. Avoid mixing by hand. Pre-wet the mixer and empty excess water. Add premeasured amount of water for mixing, followed by the grout. Begin with the minimum amount of water recommended by the manufacturer and then add the additional water required to obtain workability. However, do not exceed the manufacturer's maximum recommended water content.

3. Place grout into the designated areas in a manner that will avoid segregation or entrapment of air. Do not vibrate grout to release air or to consolidate the material. Placement should proceed in a manner that will ensure the filling of all spaces and provide full contact between the grout and adjoining surfaces. Provide grout holes as necessary. Place grout rapidly and continuously to avoid cold joints. Do not place cement grouts in layers. Do not add additional water to the mix (re-temper) after initial stiffening.

4. Just before the grout reaches its final set, cut back the grout to the substrate at a 45-degree angle from the lower edge of bearing plate unless otherwise accepted by the Engineer.

5. Begin curing immediately after form removal, cutback, and finishing. Keep grout moist and within its recommended placement temperature range for at least 24 hours after placement or longer if recommended by the manufacturer.

B. Non-shrink Epoxy Grouts:

1. Mix in accordance with the procedures recommended by the manufacturer. Do not vary the ratio of components or add solvent to change the consistency of the grout mix. Do not over mix. Mix full batches only to maintain proper proportions of resin, hardener, and aggregate. Partial mixes will be rejected and will require the suspect grout to be removed and be replaced.

2. Monitor ambient weather conditions and contact the grout manufacturer for special placement procedures to be used for temperatures below 60 degrees F or above 90 degrees F.

3. Place grout into the designated areas in a manner that will avoid trapping air. Placement methods shall ensure the filling of all spaces and provide full contact between the grout and adjoining surfaces. Provide grout holes as necessary.

4. The extension of grout horizontally beyond base plate shall be less than or equal to the grout thickness.

5. Epoxy grouts are self-curing and do not require the application of water. Maintain the formed grout within its recommended placement temperature range for at least 24 hours after placing, or longer if recommended by the manufacturer.

C. Concrete Grout:

1. Provide the underlying concrete surface with a broomed finish. Protect and keep the surface clean until placement of concrete grout.

2. Remove the debris and clean the surface of all dirt and other foreign materials.

3. Saturate the concrete surface for at least 24 hours prior to placement of the concrete grout. Remove excess water just prior to placement of the concrete grout. Place a cement slurry immediately ahead of the concrete grout so that the slurry is moist when the grout is placed. Work the slurry over the surface with a broom until it is coated with approximately 1/16- to 1/8-inch thick cement paste.

3.05 CLOSEOUT ACTIVITIES:

A. Provide in accordance with Section 01700.

END OF SECTION

SECTION 03730

CONCRETE REPAIR

PART 1 - GENERAL

1.01 DESCRIPTION:

A. Provide materials labor, equipment, and services necessary to repair concrete as specified.

B. Complete concrete repair operations in accordance with these specifications and the various system manufacturers' instructions regarding surface preparation, application, inspection and requirements for safety.

C. Complete crack repair work in accordance with these specifications and crack repair material manufacturer's instructions.

D. Complete joint repair work in accordance with these specifications and the joint repair material manufacturer's instructions.

E. The areas of concrete repair shall be determined by the Contractor and the Engineer and shall include any location where acidic attack of the concrete surfaces has reached a depth of ½" or deeper and at any air voids, bug holes or poorly consolidated concrete areas where the specified filler/surfacer materials cannot be used for filling or surfacing of the concrete.

F. If repair work is required for an area indicated to receive protective lining or coating, provide such repair in accordance with the requirements of this specification and the related lining or coating specifications.

G. The repair work specified herein is intended to cover the requirements for repair of concrete only, to a maximum depth of approximately 4-inch. If after blasting and cleaning, an area is discovered that requires a repair greater than 4-inch deep, or an area is discovered that requires repair or replacement of reinforcing steel notify the Engineer so that details may be provided to the Contractor to complete the repair.

1.02 REFERENCES:

A. National Association of Corrosion Engineers (NACE):

1. 6D-173: "A Manual for Painter Safety"

2. 6F-163: "Surface Preparation of Steel or Concrete Tank Interiors"

3. TPC2: "Coatings and Linings for Immersion Service"

B. American Concrete Institute (ACI):

1. 503.4: Standard Specification for Repairing Concrete with Epoxy Mortars

C. ASTM International (ASTM):

1. C33: Standard Specifications for Concrete Aggregates

2. C150: Standard Specification for Portland Cement

3. C321: Standard Test Method for Bond Strength of Chemical-Resistant Mortars

4. C882: Test Method for Bond Strength of Epoxy Resin Systems

5. D570: Test Method for Water Absorption of Plastics

6. D638: Test Method for Tensile Properties of Plastics

7. D695: Test Method for Compressive Properties of Rigid Plastics

8. D790: Standard Test Method for Flexural Properties of Unreinforced and Reinforced Plastics and Electrical Insulating Materials

9. D4262: L.R. Standard Test Method for pH of Chemically Cleaned or Acid Etched Concrete Surfaces

10. E329: Standard Specification for Agencies Engaged in the Testing and/or Inspection of Materials Used in Construction

11. E337: L.R. Standard Practice Test Method for Measuring Humidity with a Psychrometer.

D. National Sanitation Foundation (NSF):

1. NSF/ANSI Standard 61: Drinking Water System Components – Health Effects

1.03 MEASUREMENT:

A. Crack Repair: The quantities in linear feet to be measured for payment shall be the actual length of cracks repaired by the methods and materials specified under.

1. Epoxy crack repair.

2. Flexible polyurethane crack repair.

3. Rigid polyurethane crack repair.

B. Spall Repair Depth 4-inch or less: The quantities in square feet to be measured for payment shall be the actual square footage of spalled concrete repaired by the method and materials specified under spall repair.

C. Spall Repair Depth Greater Than 4-inch: The quantities in cubic feet to be measured for payment shall be the actual cubic footage of spalled concrete repaired by the method and materials specified under spall repair.

D. Crystalline Waterproofing Crack and Joint Repair: The quantities in linear feet to be measured for payment shall be the actual length of joints repaired by the methods and materials specified under crystalline waterproofing crack and joint repair.

E. Pipe Penetrations: The quantities in linear feet to be measured for payment shall be the actual circumference repaired by the methods and materials specified under pipe penetrations.

F. Waterproofing Treatment: The quantities in square feet to be measured for payment shall be the actual square footage of concrete surface to which the coating shall be applied specified under waterproofing treatment.

1.04 SUBMITTALS:

A. Submit the following in accordance with Section 01300.

1. Procedures proposed for the accomplishment of repair work. Include a detailed description of the methods and equipment to be used for each operation, and the sequence of operations to be coordinated with other works in progress.

2. Manufacturer's recommendations and product data sheets for all repair materials including performance criteria, surface preparation, ambient condition requirements and applications, curing requirements, volatile organic compound (VOC) data, and safety requirements.

3. Material Safety Data Sheets (MSDS) for any materials brought on-site including all repair system materials, solvents and abrasive blast media.

4. Qualifications of foreman and epoxy gun operators and demonstration of meeting the minimum requirements specified.

5. Design Mixes: Provide concrete and cement mortar in conformance with Section 03300 and as specified herein.

6. ANSI/NSF 61 Certification that repair material proposed for use in structures to contain potable water are non-toxic and have no adverse effect on the quality or appearance of potable water.

1.05 QUALITY ASSURANCE:

A. Comply with the requirements specified in Section 01400.

B. Furnish the names of all subcontractors proposed for use for this work including necessary evidence and/or experience records to ascertain their qualifications in the application of epoxy, polyurethane, polymer-modified and cement-based compounds.

C. Include in accepted applicator qualifications:

1. A minimum of five years experience in applying epoxy, polyurethane and polymer-modified and cement-based compounds, and crystalline waterproofing repair systems similar to those specified in this Section.

2. A letter from the manufacturer of the specified materials, on the manufacturer's letterhead, signed by an officer of the company, stating that the subcontractor/applicator has been trained in the proper techniques for the preparation of the surface, and proper methods for mixing, placing, curing, and caring of the manufacturer's products. This letter shall further state that the subcontractor/applicator is on the manufacturer's approved list of contractors.

D. Adhere strictly to the manufacturer’s printed recommendations supplied with the product regarding temperature at time of application for all work. Do not use epoxy materials when either the temperature of the concrete to be repaired or the ambient temperature is below 50 degrees F 24 hours before, during, or for a period of 48 hours after the completion of the repair. Do not use crystalline waterproofing materials when either the temperature of the concrete to be repaired or the ambient temperature is below 40 degrees F 24 hours before, during, or for a period of 48 hours after the completion of the repair. Temporary heat may be used to meet the specified requirements.

E. Use new materials and use within the shelf life limitations set forth by the manufacturer. Clearly mark the shelf life limitations of each container.

F. The Contractor is ultimately responsible for the concrete repair work. Inspections by the Engineer or others do not limit the Contractor’s responsibility.

G. Make all parts of the work accessible for inspections by the Engineer. Correct any conditions not in conformance with the specifications at no additional cost to the Owner.

H. Provide a Representative on site at all times when work is ongoing to represent the Contractor and to have authority to receive and execute all instructions given by the Engineer.

I. Allow changes in the specified repair work methods only with the permission of the Engineer.

J. Provide technical field support or training services required by the accepted material manufacturers at no additional cost to the Owner.

K. Provide materials from a single manufacturer for all components of a single repair.

1.06 SERVICES OF MANUFACTURERS REPRESENTATIVES:

A. Provide the services of a qualified manufacturer's technical representative to instruct the Contractor's personnel in the mixing, proper use and application of the epoxy, polyurethane, polymer-modified, crystalline repair systems and cement-based compounds.

B. Provide written certification from the manufacturers' representative that materials have been mixed and applied properly and surfaces to receive these products have been prepared properly, all in conformance with manufacturer's requirements.

C. Provide on-site time required for the manufacturer's representative to achieve a successful installation at no additional cost to the Owner.

1.07 DELIVERY, STORAGE AND HANDLING:

A. Comply with the requirements in section 01610.

B. Provide shelter to store materials in area or areas designated by the Owner solely for this purpose. Confine mixing, thinning, clean-up and associated operations and storage of repair mortar materials debris before authorized disposal, to these areas.

C. Mix all specified materials in the sheltered mixing operation and materials from direct sunlight and inclement weather. Protect facilities from staining and damage.

D. Do not dispose of waste materials on-site.

E. Store waste temporarily in closed, nonflammable containers until final disposal. Keep no rubbish in Contractor’s area longer than 24 hours.

F. Deliver all materials to the job site in new, unopened containers. Each container shall bear the manufacturer’s name and label. Labels on all material containers shall contain the following information:

1. Name of product.

2. Federal Specification Number if applicable.

3. Manufacturer’s batch number.

4. Manufacturer’s name.

5. Generic type of material.

6. Hazardous material identification label.

7. Shelf life date.

G. Clearly mark all containers indicating any safety hazards associated with the use of or exposure to the materials.

H. Handle and store materials to prevent damage or loss of label. Protection of materials is the Contractor's responsibility.

1.08 PROJECT/SITE CONDITIONS:

A. Environmental Requirements:

1. Comply with the repair material manufacturer's recommendations as to environmental conditions under which materials can be applied and cured.

2. Do not apply materials when dust is being generated.

B. Protection:

1. Cover or otherwise protect finish work or other surfaces not being repaired.

C. Ventilation:

1. Provide ventilation to meet product requirements prior to, during, and after application.

PART 2 - PRODUCTS

2.01 WATER:

A. Use water free from injurious amounts of ice, oil, acid, alkali, salt, organic matter, or other deleterious substances and conforms to requirements of ASTM C1602.

B. Water shall not contain more than 500 mg of chlorides or more than 500 mg of sulfates.

C. Heat or cool water to obtain concrete repair product temperatures in accordance with manufacture's printed recommendations, and in accordance with ACI 305.1 and ACI 306.1.

2.02 AGGREGATE:

A. All aggregates shall conform to ASTM C33 and Section 03300.

2.03 EPOXY BONDING AGENT:

A. Epoxy bonding agent shall conform to ASTM C881 Type I, II, IV or V; Grade 2 for epoxy resin adhesives, depending on the application. The class of epoxy bonding agent shall be suitable for all ambient and substrate temperatures.

B. Products:

1. Sika Corporation; Sikdur 32 Hi-Mod

2. Euclid Chemical Company; Duralcrete

3. BASF Corporation; MasterEmaco ADH 326

4. Or acceptable equivalent product.

2.04 ANTI-CORROSION COATING:

A. Anti-corrosion coating shall be a three-component, solvent free, and moisture tolerant epoxy-modified cementitious material.

B. Products:

1. Sika Corporation; Sika Armatec 110

2. Sto Corporation; CR 246

3. Euclid Chemical Company; Duralprep A.C.

4. Or acceptable equivalent product.

2.05 EPOXY CRACK REPAIR BINDER:

A. Epoxy crack repair binder shall be a two-component, 100 percent solids, high-modulus, low viscosity epoxy adhesive suitable for crack grouting by injection or gravity feed.

B. Products:

1. Sika Corporation; Sikadur 52

2. Euclid Chemical Company; Duralcrete LV

3. BASF Corporation; MasterInject 1380

4. Or acceptable equivalent product.

2.06 FLEXIBLE POLYURETHANE CRACK REPAIR MATERIAL:

A. Flexible polyurethane crack repair material shall be a one-component, water-activated polyurethane hydrophilic injection grout capable of 700 percent expansion. Polyurethane grout shall form a tough flexible foam seal that is impenetrable to water.

B. Products:

1. Prime Resins; Prime Flex 900 XLV

2. Sika Corporation; Sikafix HH Hydrophilic

3. Euclid Chemical Company; Dural Aqua-Fil

4. Or acceptable equivalent product.

2.07 RIGID POLYURETHANE CRACK REPAIR MATERIAL:

A. Rigid polyurethane crack repair material shall be a one-component, water-activated polyurethane hydrophobic injection grout capable of 700 percent expansion. Polyurethane grout shall form a tough rigid foam seal that is impenetrable to water.

B. Products:

1. Euclid Chemical Company; Dural Aqua-Dam LV

2. Prime Resins; Prime Flex 920

3. Sika Corporation; Sikafix HH LV

4. Or acceptable equivalent product.

2.08 EPOXY REPAIR MORTAR:

A. Epoxy Repair Mortar shall be two-component, 100 percent solids, and 100 percent reactive epoxy resin system.

B. Spall repair mortar for use in horizontal applications.

1. Products:

a. BASF Corporation; MasterEmaco ADH 327

b. Sika Corporation; Sikadur 22 Lo-Mod

c. Euclid Chemical Company; Euco #4565 Mortar

d. Or acceptable equivalent product.

C. Spall repair mortar for use in vertical and overhead applications.

1. Products:

a. Sika Corporation; Sikadur 23 Lo-Mod Gel

b. BASF Corporation; MasterEmaco ADH 327

c. Or acceptable equivalent product.

2.09 SPALL REPAIRS USING NON-SHRINK CEMENTITOUS MORTAR:

A. Products:

1. BASF Corporation; MasterEmaco S 488CI

2. Sika Corporation; Sika Repair 224

3. Sauereisen, Inc.; Restokrete Underlayment No. F-120

4. Or acceptable equivalent product.

2.10 SPALL REPAIRS USING POLYMER MODIFIED CEMENTITOUS MORTAR:

A. Repair spalls repair not requiring formwork using a two-component, polymer-modified cementitious mortar having a minimum 28-day compressive strength of 6,000 psi.

B. Spall repair mortar for use in horizontal applications.

1. Products:

a. Sika Corporation; Sikatop 122 Plus

b. Euclid Chemical Company; Duraltop Flowable Mortar

c. BASF Corporation; MasterEmaco T302

d. Or acceptable equivalent product.

C. Spall repair mortar for use in vertical applications.

1. Products:

a. Sika Corporation; Sikatop 123 Plus

b. Euclid Chemical Company; Duraltop Gel

c. BASF Corporation; MasterEmaco N 423RS

d. Or acceptable equivalent product.

2.11 SPALL REPAIRS REQUIRING FORMWORK:

A. Repair spalls repair requiring formwork using a two-component, polymer-modified cementitious mortar/pea gravel mixture and shall have a minimum 28-day compressive strength of 5,000 psi. Mix each unit of mortar with Saturated Surface Dry (SSD) pea gravel to form the repair material following the manufacturer's recommendations.

B. Products:

1. Sika Corporation; Sikatop 111 Plus

2. Euclid Chemical Company; Duraltop Flowable Mortar

3. BASF Corporation; MasterEmaco N 1500HCR Self Consolidated-Extended

4. Or acceptable equivalent product.

2.12 CRYSTALLINE WATERPROOFING CRACK AND JOINT REPAIR

A. Repair cracks and joints using a crystalline waterproofing crack and joint repair system consisting of a three stage application of filling a square or U-shaped routed out crack or joint in equal lifts followed by a surface applied slurry over a 12-inch width of the crack.

B. Products:

1. Kryton International; Krystol T1 and Krystol T2.

2. Xypex Chemical Corporation; Xypex Concentrate and Xypex Concentrate (Dry-Plug).

3. Penetron International; Penetron and Penecrete Mortar

4. Or acceptable equivalent product.

2.13 PIPE PENETRATIONS EXTERIOR OF CELL

A. Repair pipe penetrations using a crystalline waterproofing crack and joint repair system consisting of a three stage application of filling a square or U-shaped routed out area at the pipe/concrete interface in equal lifts.

B. Products:

1. Kryton International; Krystol T1 and Krystol Bari-Cote.

2. Xypex Chemical Corporation; Xypex Concentrate and Xypex Concentrate (Dry-Plug).

3. Penetron International; Penetron and Penecrete Mortar

4. Or acceptable equivalent product.

2.14 WATERPROOFING TREATMENT

A. Waterproofing treatment shall be a surface applied crystalline waterproofing system shall be a brush or spray applied two coat system.

B. Products:

1. Kryton International; Kryton T1 and Kryton T2.

2. Xypex Chemical Corporation; Xypex Concentrate.

3. Penetron International; Penetron.

2.15 WATERPROOF MEMBRANE PATCH:

A. Waterproof membrane patch shall be a hypalon sealing strip secured to the concrete substrate with an epoxy adhesive.

B. Install sealing system per manufacturer's recommendations.

C. Products:

1. Sika Corporation; Sikadur Combiflex SG System

2. Trelleborg Engineered System; Waterproofing Band

3. Or acceptable equivalent product.

2.16 CEMENT BASED TEXTURED COATING:

A. Products:

1. Sika Corporation; Sikatop 144

2. Euclid Chemical Company; Duraltop Coating

3. BASF Corporation; MasterSeal 581

4. Or acceptable equivalent product.

2.17 SEALANT:

A. Sealant shall be a two-component polyurethane sealant as specified in Section 03250. Primers and bond breakers shall conform to the sealant manufacturer's recommendations.

2.18 EXPANSION JOINT FILLER:

A. Expansion joint filler shall be as specified in Specification 03250.

PART 3 - EXECUTION

3.01 GENERAL REQUIREMENTS:

A. Perform exterior work during dry weather and appropriate temperature conditions in accordance with the manufacturer's recommendations. Protect unfinished work during inclement weather with tarpulins or heavy gage polyethylene sheeting.

B. Perform work in spaces within structures at temperature and conditions suitable for proper curing in accordance with the manufacturer's recommendations.

C. Coordinate concrete rehabilitation work with other work being performed.

D. Remove scaling, broken, loose and disintegrating materials by use of hand tools or power driven saws, down to solid unyielding material.

E. Clean surfaces thoroughly of efflorescence, oils, grease and other objectionable material in area to be repaired in accordance with the manufacturer's recommendations.

3.02 EPOXY BONDING AGENT:

A. Use epoxy bonding agent to adhere fresh mortar to existing concrete. Roughen existing concrete surfaces prior to application of bonding agent. Concrete surface shall be clean and sound, free of all foreign particles and laitance. Place repair material while bonding agent is still tacky or per the written instructions of the manufacturer. Reapply bonding agent if bonding agent cures prior to placement of repair material.

B. Conform to all the requirements of ACI 503.4, and as specified herein.

3.03 ANTI-CORROSION COATING:

A. Sandblast, clean and coat reinforcing steel that is cut or exposed during alteration and/or repair operations with an anti-corrosive coating.

B. Cover all exposed parts of the steel with the coating and apply according to manufacturer's recommendations.

3.04 EPOXY CRACK REPAIR:

A. Cracks on horizontal surfaces: When permitted by the Engineer repair existing cracks by gravity feeding an epoxy crack repair binder into the prepared crack.

1. Rout concrete surface at the crack to form a minimum 1/4-inch wide by 1/4-inch deep V-notch and clean to remove all loose and foreign particles. Fill crack with clean, dry sand and pour epoxy crack repair binder into V-notch, completely filling crack.

2. As binder penetrates into crack, apply additional binder to the V-notch.

B. Cracks on vertical or horizontal surfaces: Repair cracks by pressure injecting an epoxy crack repair binder into the prepared crack. Seal cracked surfaces and install injection ports per manufacturer's recommendations.

1. Do not damage reinforcement steel when drilling holes for injection ports. If rebar is encountered during drilling, abandon the hole and relocate. Patch the abandoned hole immediately with epoxy mortar flush with the surface of the existing concrete.

2. Inject crack with epoxy crack repair binder once the surface sealing material has cured as directed by the manufacturer.

3. Remove injection ports upon satisfactory completion of crack injection and patch with epoxy mortar.

3.05 RIGID AND FLEXIBLE POLYURETHANE CRACK REPAIR:

A. Repair leaking cracks by pressure injecting with a waterproof hydrophilic or hydrophobic injection grout as directed by the Structural Engineer of Record. Seal crack surfaces and install injection ports per manufacturer's recommendations.

B. Do not damage rebar when drilling holes for injection ports. If rebar is encountered during drilling, abandon the hole and patch immediately with epoxy mortar flush with the surface of the existing concrete.

C. Inject crack with hydrophilic or hydrophobic injection grout as directed once the surface sealing material has cured, as directed by the manufacturer.

3.06 SPALL REPAIR:

A. Saw cut the perimeter of the repair area to a minimum depth of 1/4-inch below the surface of the concrete. Chip all loose concrete in the repair area to remove loose and degraded concrete to a minimum of 1/4-inch or until a sound substrate is reached. Clean the area to be repaired and restore to the original dimensions with spall repair patching material according to the manufacturer's recommendations.

B. Make final finished surface of patches flat, level and even with the existing concrete surface. Do not feather repair mortar to meet existing concrete surface.

C. Finish final patches on horizontal surfaces consistent with the finish on the existing structure.

3.07 JOINT REPAIR:

A. Remove sealant, bond breaker and joint filler.

B. Remove unsound concrete on the joint faces.

C. Remove laitance and provide a clean dry surface.

D. Prepare an epoxy mortar by combining epoxy crack repair binder with aggregate following the manufacturer's instructions.

E. Restore surface to original dimensions by trowelling epoxy mortar onto the existing substrate in a manner to ensure bonding following the manufacturer's instructions.

F. Cure repair in accordance with the manufacturer's instructions.

G. Install new joint filler, bond breaker and sealant.

3.08 WATERPROOF MEMBRANE PATCH:

A. Clean and install waterproof membrane textured patches on existing concrete areas requiring a textured patch according to manufacturer's recommendations.

3.09 CEMENT BASED TEXTURED COATING:

A. Clean existing concrete areas requiring a textured coating and apply the cement based textured coating according to manufacturer's recommendations.

B. Complete other concrete rehabilitation prior to applying coating.

3.10 CRYSTALLINE WATERPROOFING CRACK AND JOINT REPAIR:

A. Identify all cracks and joints to be repaired prior to commencing repair operations.

B. Using a concrete saw or angle grinder, create a 1/4 inch deep groove 1/2 inch to either side of the crack or joint to create a vertical seam for chipping operations. Using a 1 inch square chisel, chip a 1 inch wide chase along all cracks and joints to a minimum depth of 1.5 inches. The chase must be square or U-shaped.

C. Clean the chase of dust and loose concrete.

D. Pre-wet the surface to a saturated-surface-dry (SSD) condition. Do not leave any standing, pooled, or puddled water.

E. Fill one-third of the depth of the chase with the first lift of repair material. Cure the material per manufacturer’s printed instructions.

F. Fill the next one-third of the chase with the second lift of repair material. Cure the material per manufacturer’s printed instructions.

G. Fill the remaining one-third of the chase with the third and final lift of repair material. Cure the material per manufacturer’s printed instructions.

H. If the surface of the concrete is not receiving a complete Waterproofing Treatment, apply a slurry coat of waterproofing treatment to 6-inch to either side of the crack or joint.

3.11 PIPE PENETRATIONS:

A. Identify all pipe penetrations to be repair prior to commencing pipe penetration repairs.

B. Pipe penetration repairs shall not be performed against flowing or seeping water.

C. Prepare a recessed chase using a 1 inch square chisel to chip a 1 inch wide chase to a minimum depth of 1.5 inches. The chase must be square or U-shaped.

D. Prepare the pipe surface so that the repair products will adhere to the pipe in accordance with manufacturer printed instructions. Remove all grease, oil, corrosion, and scale. Abrade the pipe surface within the chase by coarse sanding to achieve a coarse surface profile.

E. Clean the chase of dust and loose concrete.

F. Fill one-third of the depth of the chase with the first lift of repair material. Cure the material per manufacturer's printed instructions.

G. Fill the next one-third of the chase with the second lift of repair material. Cure the material per manufacturer's printed instructions.

H. Fill the remaining one-third of the chase with the third and final lift of repair material. Cure the material per manufacturer's printed instructions.

3.12 WATERPROOFING TREATMENT:

A. Repair surface defects in accordance with section 3.06, Spall Repair.

B. Clean existing concrete areas by high pressure water blasting (3,000 psi minimum) to remove loose concrete and surface contaminants. Wash and rinse with a detergent or concrete degreaser if required to remove contaminants prior to water blasting. Sand blasting, scarifying, shot blasting, other mechanical methods, or acid-etching are not permitted.

C. Apply first coat of waterproofing treatment to a surface saturated dry surface. Apply at the recommend rate in accordance with manufacture's printed instructions for the surface orientation. Cure the material in accordance with the manufacturer's printed instructions.

D. Apply second coat of waterproofing treatment to a surface saturated dry surface following the recommended cure time for the first coat. Apply at the recommend rate in accordance with manufacture's printed instructions for the surface orientation. Cure the material in accordance with the manufacturer's printed instructions.

E. Wait a minimum of 14 days following completion of final curing prior to cleaning and filling tanks that are to contain potable water.

3.13 CURING:

A. Cure repair materials in accordance with manufacturer's printed instructions.

3.14 CLEANING:

A. Mechanically remove excess material from walls, floors, etc. after material has cured.

B. Clean excess materials caused by work under this Section from existing surfaces by the use of power sanders. Vacuum surfaces to receive final cleaning and finishing specified under other sections of the specifications. Sand cracks (except those repaired by crystalline waterproofing crack and joint repair methods) flush to adjacent surfaces.

C. Remove misplaced sealants using methods and materials recommended by the manufacturers. Leave finished work and work area in a neat and clean condition.

D. Rinse tanks containing drinking water with potable water following completion of repairs.

3.15 LEAKAGE TESTING

A. Provide leakage testing in accordance with Section 03800.

B. Leak test all cells in the single test. Do not test cells individually.

3.16 CLOSEOUT ACTIVITIES:

A. Provide in accordance with Section 01700.

END OF SECTION

SECTION 03800

LEAKAGE TESTING OF CONTAINMENT STRUCTURES

PART 1 - GENERAL

1.01 DESCRIPTION:

A. This section describes the method of testing concrete containment structures for leakage. All containment structures shall be leak tested unless specifically exempted by the Engineer.

1.02 REFERENCES:

A. American Concrete Institute (ACI):

1. 350.1: Tightness Testing of Environmental Engineering Concrete Structures and Commentary.

PART 2 - PRODUCTS

2.01 MATERIALS:

A. Provide piping and equipment to test concrete structures for leakage as described herein.

PART 3 - EXECUTION

3.01 GENERAL:

A. Hydrostatically test reinforced concrete structures which will contain fluids to determine that they conform to leakage criteria specified herein and are free of detectable leaks. Do not hydrostatically test walls that are to be restrained or laterally supported by slabs until slab concrete has obtained the specified compressive strength.

B. Prior to testing, clean exposed surfaces by thoroughly hosing and removing surface laitance and loose matter from walls and slabs. Remove wash water and debris from the structures by means other than washing through plant piping. All potential leakage points shall be identified and repaired prior to filling the tank with water for the tightness test. Methods for repairing concrete shall be as described in Section 03730.

C. No backfilling, floor finish, concrete or mortar fill, wall insulation, gas proofing or protective coatings shall be applied to or installed in any new containment structures until they have been subjected to loading for settlement and tested for leakage. Testing shall not be done until the concrete has reached its specified design strength.

3.02 PRELOADING TEST:

A. For the Preloading Test the Contractor shall maintain the liquid level in the structures at the design maximum water level for 72-hours. If the characteristics of settlement of the structure so require, the loading shall continue for a longer period to permit the necessary consolidation of the foundation material, in which case the Contractor shall be entitled to no extra compensation, but a commensurate extension of time for completion of the whole work under this contract shall be allowed.

3.03 LEAK TEST PROCEDURE:

A. Leakage testing shall meet the provisions of ACI 350.1 – Tightness Testing of Environmental Engineering Concrete Structures. The test criterion shall be HST-050 (0.050 percent per day) as defined by ACI 350.1

B. During the test period, the excavation around the structure shall be kept dewatered by the Contractor. Dewatering shall maintain the groundwater level to below the top of the base slab. The Contractor shall temporarily seal all bottom openings and wall openings below maximum water level in the structures, furnish and fill the structures to the design maximum water level with clean water. The Contractor shall make his own arrangements for handling the water for testing and its transfer from one structure to another and its final disposal.

C. Filling rate shall not exceed a 4 feet per hour or as permitted by the Engineer. Filling shall be at a uniform rate with continuous monitoring.

D. During the leakage test period, the Engineer will inspect the structure for leakage or change in volume. If moist spots become visible, indicating the existence of minor leaks, or if the water level indicates hidden leakage, the Contractor shall furnish all materials and do all work necessary to locate the leaks and make the structure watertight to the complete satisfaction of the Engineer. No additional compensation will be allowed for such work.

E. If, in the opinion of the Engineer, during the course of the test weather conditions are such that it becomes difficult to accurately monitor the water level in the tank, the test shall be stopped, and started over again when weather permits, at no additional cost to the Owner.

F. On conclusion of the test, the Contractor shall pump or drain the water from the structure and dispose of it without damage to structures or surrounding facilities.

G. The structure will be considered as passing the water tightness test when no wet spots are observed on the exterior surfaces of the containment structure during the water tightness test period and when the measured loss is less than the maximum specified

3.04 REPAIR METHODS

A. Methods for repairing concrete not passing the leakage test shall be as described in Section 03730.

3.05 CLOSEOUT ACTIVITIES

A. Provide in accordance with Section 01700.

END OF SECTION

SECTION 05500

MISCELLANEOUS METAL

PART 1 - GENERAL

1.01 DESCRIPTION:

A. This section includes metal fabrications not specifically included in other Sections and required for completion of work as shown on Contract Drawings and in accordance with Contract Documents.

B. Furnish labor, materials, equipment and incidentals necessary to install the products specified.

C. The extent of pre-engineered aluminum stairs and ladders shall be as shown. The work also includes:

1. Providing openings in and attachments to pre-engineered aluminum stairs and ladders to accommodate the Work under this and other sections and providing for the pre-engineered aluminum stairs and ladders all items such as anchor bolts, studs and all items required for which provision is not specifically included under other sections.

2. Stair contractor shall provide design, detailing, fabrication and installation of ALL stair framing and connections, including column base connections, per specifications and provide calculations stamped by a structural engineer licensed in the state of Massachusetts to the Construction Manager for Architect /Engineer of Record for review. Column base connections shall be designed with post-installed anchors to foundations (exterior) or existing floor slabs (interior). All exterior stair framing, diagonal braces and column base anchorage shall be grade 316 stainless steel.

D. Grating contractor shall provide design, detailing, fabrication and installation of all gratings, including connectors, fasteners, and system required accessories per specifications and provide calculation stamped by a structural engineer licensed in the state of Massachusetts to the Construction Manager for Architect/Engineer review.

E. Railing contractor shall provide design, detailing, fabrication and installation of all handrails, guardrails and railing systems, including connectors, fasteners, and system required accessories per specifications and provide calculation stamped by a structural engineer licensed in the state of Massachusetts to the Construction Manager for Architect/Engineer review.

1.02 REFERENCES:

A. American Society of Mechanical Engineers (ASME):

1. B18.5: Round Head Bolts.

B. ASTM International (ASTM):

1. A6: General Requirements for Rolled Structural Steel Bars, Plates, Shapes and Sheet Piling.

2. A36: Standard Specification for Carbon Structural Steel.

3. A53: Standard Specification for Pipe, Steel, Black and Hot-Dipped, Zinc-Coated, Welded and Seamless.

4. A108: Standard Specification for Steel Bars, Carbon, Cold Finished, Standard Quality.

5. A123/A123M: Standard Specification for Zinc (Hot-Dip Galvanized) Coatings on Iron and Steel Products.

6. A153: Standard Specification for Zinc Coating (Hot-Dip) on Iron and Steel Hardware.

7. A193/A193M: Standard Specification for Alloy-Steel and Stainless Steel Bolting Materials for High Temperature or High Pressure Service and Other Special Purpose Applications.

8. A240: Standard Specification for heat-resisting chromium and chromium-nickel stainless steel plate, sheet, and strip for pressure vessels.

9. A276: Standard Specification for Stainless Steel Bars and Shapes.

10. A307: Carbon Steel Bolts and Studs, 60,000 psi Tensile Strength.

11. A325: Structural Bolts, Steel, Heat Treated 120/105 ksi Minimum Tensile Strength.

12. A366: Standard Specification for Steel, Sheet, Carbon, Cold-Rolled, Commercial Quality.

13. A489: Standard Specification for Carbon Steel Lifting Eyes.

14. A500: Standard Specification for Cold-Formed Welded and Seamless Carbon Steel Structural Tubing in Rounds and Shapes.

15. A501: Standard Specification for Hot-Formed Welded and Seamless Carbon Steel Structural Tubing.

16. A502: Steel Structural Rivets.

17. A569: Steel, Carbon (0.15 Maximum, Percent) Hot-Rolled Sheet and Strip Commercial Quality.

18. A570: Steel, Sheet and Strip, Carbon, Hot-Rolled, Structural Quality.

19. A572: Standard Specification for High-Strength Low-Alloy Columbium-Vanadium Structural Steel

20. A576: Steel Bars, Carbon, Hot-Wrought, Special Quality.

21. A675: Steel Bars, Carbon, Hot-Wrought, Special Quality, Mechanical Properties.

22. A786: Rolled Steel Floor Plates.

23. A992: Standard Specification for Structural Shapes.

24. B26: Specification for Aluminum-Alloy Sand Castings.

25. B211: Specification for Aluminum-Alloy Bars, Rods, Profiles and Tubes.

26. B209: Specification for Aluminum and Aluminum-Alloy Sheet and Plate.

27. B221: Specification for Aluminum-Alloy Extruded Bars, Rods, Wire, Shapes, and Tubes.

28. B247: Specification for Aluminum and Aluminum-Alloy Die Forgings, Hand Forgings and Rolled Ring Forgings.

29. B308: Standard Specification for Aluminum-Alloy 6061-T6 Standard Structural Profiles.

30. B 429: Specification for Aluminum-Alloy Extruded Structural Pipe and Tube.

31. D1056: Standard Specification for Flexible Cellular Materials—Sponge or Expanded Rubber.

32. F436: Standard Specification for Hardened Steel Washers.

33. F541: Standard Specification for Alloy Steel Eyebolts.

34. F593: Standard Specification for Stainless Steel Bolts, Hex Cap Screws, and Studs.

35. F594: Standard Specification for Stainless Steel Nuts.

36. F844: Standard Specification for Washers, Steel, Plain (Flat), Unhardened for General Use.

37. F1554: Standard Specification of Anchor Bolts, steel, 36, 55 and 105-ksi Yield Strength.

38. F2329: Standard Specification for Zinc Coating, Hot-Dip, Requirements for Application to Carbon and Alloy Steel Bolts, Screws, Washers, Nuts, and Special Threaded Fasteners.

C. American Institute of Steel Construction (AISC):

1. ANSI/AISC 360-5: Specification for Structural Steel Buildings

2. AISC Manual of Steel Construction, Thirteenth Edition

D. American Welding Society (AWS):

1. A2.4: Standard Symbols for Welding, Brazing, and Nondestructive Examination.

2. D1.1: Structural Welding Code.

3. D1.2: Structural Welding Code - Aluminum.

E. National Association of Architectural Metal Manufacturers (NAAMM):

1. MBG 531: Metal Bar Grating Manual.

2. MBG 532: Heavy Duty Metal Bar Grating Manual.

3. MBG 533: Welding Specifications for Fabrication of Steel, Aluminum and Stainless Bar Grating.

F. Aluminum Association:

1. Aluminum Design Manual–Specifications and Guidelines for Aluminum Structures.

a. AA M31C22A41

(1) M31: Mechanical Finish, Fine Satin

(2) C22: Finish, Medium Matte

(3) A41: Clear Anodic Coating, Class I

G. International Code Council – Evaluation Services (ICC-ES):

1. ICC-ES Acceptance Criteria 01: Mechanical Anchors in Masonry Elements

2. ICC-ES Acceptance Criteria 58: Adhesive Anchors in Masonry Elements

3. ICC-ES Acceptance Criteria 193: Mechanical Anchors in Concrete Elements

4. ICC-ES Acceptance Criteria 308: Post-installed Adhesive Anchors in Concrete Elements

H. National Sanitation Foundation (NSF):

1. 61: Drinking Water System Components – Health Effects

1.03 SUBMITTALS

A. Submit the following shop drawings in accordance with Section 01300.

1. Submit signed and sealed Stair, Railing, Ladder, and Grating shop drawings and Certificate of Delegated Design Services, which are prepared by registered Professional Structural Engineers registered in Massachusetts.

2. Show fabrication and installation of miscellaneous metal elements assembled from standard components. Include plans, elevations, component details, materials, finishes, sizes of members, connection and joining methods, and mounting details to adjoining work.

B. Submit product data showing manufacturer’s literature, materials of construction and details of assembly and installation for all items furnished under this Section.

C. Calculations and Test Reports:

1. Submit calculations and test data demonstrating that the metal members will resist the loads specified herein, 780 CMR and OSHA. Calculations shall be stamped by Professional Structural Engineer registered in State of Massachusetts.

2. Submit certified copies of mill test reports on each steel, stainless steel, or aluminum proposed for use showing the physical properties and chemical analysis.

D. Miscellaneous Submittals:

1. Welders' Certificates: Certifying welders employed on the Work, verifying AWS qualification within the previous 12 months.

2. Manufacturer's Certificate: Certify that Products meet or exceed specified requirements.

3. Manufacturer's instructions describing procedures for maintaining including cleaning materials, application methods, and precautions as to use of materials which may be detrimental to finish when improperly used.

E. Samples:

1. 6 inch long samples of each type of railing showing finish.

1.04 QUALITY ASSURANCE:

A. Comply with the requirements specified in Section 01400.

B. Manufacturer shall have minimum five years experience specializing in manufacturing products specified in the section.

C. Welding Qualification and Certification:

1. Furnish written welding procedure for all welds in conformance with AWS Structural Welding Code.

2. Each welder, tacker and welding operator shall be certified by test to perform type of work required in conformance with AWS Structural Welding Code. Testing shall be conducted and witnessed by an independent testing laboratory.

3. Maintain duplicate qualification and certification records at the job site readily available for examination.

1.05 DELIVERY STORAGE AND HANDLING:

A. Comply with the requirements specified in Section 01610.

B. Insofar as practical, factory assemble items specified herein. Package, ship and tag unassembled materials in a manner that will protect materials from damage and will facilitate identification and field assembly.

C. Package stainless steel items in a manner to provide protection from carbon impregnation.

D. Protect painted coatings and hot-dip galvanized finishes from damage due to metal banding and rough handling. Use padded slings and straps.

E. Deliver items to be incorporated into the work of other trades in sufficient time to be checked prior to installation.

F. Store fabricated items in a dry area, not in direct contact with ground.

1.06 FIELD MEASUREMENTS:

A. The Contractor shall verify all dimensions and shall make any field measurements necessary and shall be fully responsible for accuracy and layout of the work.

B. The Contractor shall review the Contract Drawings and any discrepancies shall be reported to the Engineer for clarification prior to starting fabrication.

1.07 DESIGN REQUIREMENTS:

A. Design and provide handrail and guardrail system to meet 780 CMR, OSHA and the criteria specified herein. Railing shall be capable of withstanding the following loads without exceeding design allowable stress of materials for handrails, railing anchors and connections:

1. Railings and guardrails shall be designed for a live load of 100 plf vertical plus 50 plf horizontal applied concurrently or a concentrated load of 200 pounds applied in any direction at any point along the rail, whichever produces the most extreme condition.

2. Intermediate rails, balusters and panels or fillers shall be designed for a uniform load of 25 psf over the gross area of the guard of which they are a part. This loading need not be added to the loading of the main members prescribed above.

3. Handrails shall be designed for a live load of 50 plf applied in any direction or a concentrated load of 200 pounds applied in any direction at any point along the handrail, whichever produces the most extreme condition.

4. Thermal movements: Provide adequate expansion within the system to allow for thermal expansion and contraction caused by a temperature change of 120 degrees F to -20 degrees F without buckling or warping, opening of joints, overstressing of components, failure of connections and other detrimental effects.

5. Control of corrosion: Prevent galvanic action and other forms of corrosion by insulating metals and other materials from direct contact with incompatible materials.

B. Aluminum grating, aluminum plate, and unpunched aluminum plank design shall be based upon the following criteria:

1. Design Live Loads:

a. Uniform Live Load: 200 psf

b. Concentrated @ Center Span: 500 plf

2. Maximum bending stress = 12,000 psi

3. Maximum shear stress = 8,000 psi

4. Modulus of Elasticity = 10,000 ksi

5. Maximum deflection under 100 psf uniform live load = $\frac{\text{Span}}{300}$

C. Stairs and ladders shall conform to OSHA, Massachusetts Safety Standards. Stairs shall be designed to withstand a minimum uniform live load of 100 psf or a concentrated live load of 300 pounds applied on an area of 4 square inches at any point along the element.

D. Vertical ladders shall be designed to withstand a minimum of two loads of 250 pounds each, concentrated between any two consecutive attachments. The number and spacing of additional loads shall be in accordance with the anticipated usage of the ladder. Individual steps or rungs shall be designed to support a load of 250 pounds applied at any point.

PART 2 - PRODUCTS

2.01 MISCELLANEOUS METAL SHAPES, CASTINGS, BOLTS AND ACCESSORIES:

A. Aluminum Shapes:

1.	Structural Shapes	ASTM B308, Alloy 6061-T6
2.	Extruded Pipe	ASTM B429, Alloy 6063-T6
3.	Aluminum Sheet and Plate	ASTM B209, Alloy 6061-T6

B. Steel Washers ASTM F436

C. Plain Unhardened Steel Washers: ASTM F844

D. Anchor Bolts: ASTM F1554, Grade 36 standard headed bolts with heavy hex nuts, Grade A washers, hot-dip galvanized, unless otherwise specified.

E. Stainless Steel Bolts and Nuts: F593 and F594, AISI Type 316

F. Connection Bolts for Wood Members: ASTM A307, galvanized where specified

2.02 POST INSTALLED ANCHORS:

A. Mechanical Expansion Type Anchors: Anchors shall be qualified per ICC-ES AC193.

1. Products:

a. Hilti Corporation, Kwik-Bolt TZ

b. DeWalt Anchors & Fasteners, Power Stud+SD1 Wedge Expansion Anchor

c. Simpson Strong Tie, Strong Bolt 2 Wedge Anchor

2. General:

a. Use Zinc or chromate-plated carbon steel where totally embedded, in interior locations with controlled humidity and other protected locations, unless otherwise specified on Contract Drawings.

b. Use stainless steel in other locations or when attaching aluminum and stainless steel.

c. Do not use expansion anchors in submerged and dynamic load applications.

B. Adhesive Anchors:

1. Products:

a. Hilti Corporation, HIT- HY 200-A V3 Adhesive Anchor

b. DeWalt, Pure200+ Epoxy Injection Adhesive Anchoring System

c. Simpson Strong Tie, SET-XP Epoxy-Tie or Acrylic-Tie

2. General:

a. Adhesive anchors shall be Stainless Steel Type 316.

b. Epoxy adhesive shall be ANSI/NSF approved for use in contact with potable water.

2.03 ANCHOR CHANNEL INSERTS:

A. Make anchor channels from channel profiles with “I” anchors shop welded to back of channels. Furnish anchor channels with head bolts, channels, nuts for a complete installation. Material shall be Stainless Steel Type 316**.**

2.04 EYE BOLTS:

A. Provide eyebolts of the welded-eye or forged type, carbon steel, hot-dipped galvanized steel per ASTM F2329.

B. Provide threaded carbon steel lifting eyes that comply with ASTM A489, Type 1 2, Style B.

C. Provide threaded alloy steel eyebolts that comply with ASTM F541 and ASME B18.5, Type 1 2, long short length.

2.05 ALUMINUM BAR GRATINGS:

A. Manufacturers:

1. Type B as manufactured by IKG Borden Metal Products Co.

2. Type SG Series as manufactured by Ohio Gratings, Inc.

3. GAL Series as manufactured by McNichols Co.

4. Or approved equal.

B. Provide as indicated and specified.

1. 3/16-inch thick bearing bars by depth indicated grating span table 05500-1, 1-3/16 inches center to center with cross bars pressure locked on 4-inch centers.

2. Fabricate in standard size sections, secure in place with four (minimum), stainless steel acceptable removable-type fasteners per panel.

3. Apply bearing bar banding at ends of grating sections and at fixture or pipe openings where two or more bearing bars are cut. Cutout for obstructions shall provide 1-inch clearance of the obstruction.

4. Provide serrated top surfaces.

5. Provide angle frame for gratings in concrete surrounds: Miter and weld corners, weld on anchors, grind exposed welds smooth.

6. Provide hinged gratings with 180 degree double-acting Type 316 stainless steel hinges where indicated. Fasten to bearing bars with Type 316 stainless steel bolts.

7. Before coating application, clean contact surfaces, remove dirt, grease, oil, foreign substances, followed by immersing in, or wipe thoroughly with, an acceptable solvent. Rinse with clean hot water and dry thoroughly.

8. Stainless steel saddle clips, z-clips or other approved fasteners for grating.

TABLE 05500-1 MINIMUM DEPTHS OF BEARING BARS FOR ALUMINUM GRATING							
Maximum Span	2'-0"	3'-0"	3'-6"	4'-6"	5'-0"	6'-0"	6'-6"
Bearing Bar Depth	1"	1 1/4"	1 1/2"	1 3/4"	2"	2 1/4"	2 1/2"

2.06 GRATING SUPPORT ANGLES AND FRAMING:

A. Provide aluminum support angles embedded in concrete. Angles shall be 1/4-inch thick, inside depth of support angle shall equal depth of bearing bar, inside length of support angle leg shall equal depth of grating, but not less than 1-3/4 inch. Provide 1 inch by 1/4-inch by 8 inches long bent anchor bars or 3/8-inch diameter by 6 inch headed anchor studs welded to backs of angles at 18 inches on center.

2.07 METAL FRAMES:

A. Provide hatch frame and other frames fabricated from structural shapes.

B. Fabricate frames from rolled steel sections or rolled steel sections and steel plates. Select sections for trueness of web and flange. Straighten members so finished frames are uniform, square, and true throughout length and depth of assembled units.

C. Connect built-up members of frames by plug welding. Miter or cope and join members with continuous welding beads. Provide temporary spreader bars to prevent springing frames out of shape prior to and during erection.

2.08 ALUMINUM STAIRS:

A. Provide aluminum stairs fabricated from structural aluminum channel stringers, aluminum pipe rails and aluminum treads.

B. Rectangular Bar Grating Treads:

1. Provide stair treads of the same type and bar spacing as grating specified per Section 2.05.

2. Provide minimum 3 inch by 3/16 inch carrier end plates welded to stair treads and punched for bolting to stringers.

3. Provide 1-1/4 inch abrasive nosings.

2.09 VERTICAL ALUMINUM LADDERS:

A. Fabricate ladders from 1-1/2-inch IPS, Schedule 80 aluminum pipe side rails and 1-inch solid round aluminum rod rungs, mortised and welded to uprights.

1. Provide rungs knurled or dimpled to minimize slipping.

B. Minimum diameter of rungs shall be 3/4-inch. The distance between rungs, cleats, and steps shall not exceed 12 inches and shall be uniform throughout the length of the ladder.

C. The minimum clear length of rungs or cleats shall be 24 inches.

D. Coat rungs with coarse grain nonskid epoxy coating. Color of coating shall be gray. Apply nonskid coating per manufacturer's recommendations.

E. Conform to NSF /ANSI 61, tested and certified for drinking water system components.

2.10 FALL ARREST SYSTEM:

A. Provide ladders with a rigid fall arrest system manufactured of same materials as the ladders. Fall-arrest mechanism shall meet or exceed industry standards for restrained fall arrest systems. The fall-arrest system shall be permanently fixed and provide fall protection and unrestricted movement while ascending or descending a ladder.

B. System Components:

1. High strength rigid notched carrier rail with guide channel, alignment guide and connecting strap. Provide minimum four rung claps.

2. Saf-T-Climb sleeve and safety locking mechanism; mounting brackets.

3. Safety belt with two side "D" rings for attaching

4. Body strap (nylon w/elk leather wrap) with buckle of stainless steel.

C. Conform to OSHA Regulation 1910.29 for fall prevention system.

D. Conform to NSF /ANSI 61, tested and certified for drinking water system components.

2.11 LADDER SAFETY POST:

A. Equip the interior ladders that are below hatches with ladder safety post. Ladder safety posts shall be manufactured of high strength square tubing, and of the same material as the ladders. A pull up loop shall be provided at the upper end of the post to facilitate raising the post. A spring balancing mechanism shall be provided to provide smooth, easy, controlled operation when raising and lowering the safety post.

2.12 FIBERGLASS REINFORCED LADDERS

A. Provide ladder side rails with minimum 2-inch by 2-inch by 0.156-inch square tubes. Provide ladder rungs with minimum 1-inch diameter solid round bars with slip resistant epoxy grit surfaces.

B. Install fiberglass stand-off brackets at a maximum of 4 feet on center.

C. The distance between rungs, cleats, and steps shall not exceed 12 inches and shall be uniform throughout the length of the ladder.

D. The minimum clear width of rungs or cleats shall be 24 inches.

2.13 ALUMINUM RAILING SYSTEM AND COMPONENTS:

A. Material: ASTM B429, alloy 6063-T6, Schedule 80, 1-1/2 inch diameter minimum extruded structural pipe or tube rails and schedule 80 posts.

B. Railings at open-side construction shall consist of two members with posts. Locate intermediate rails between top rail and finish floor as indicated on Drawings.

C. Provide 1/4-inch thick by 4 inch high or "S" type toe plate except on stairs and where concrete curb provided. Provide 1/4-inch clearance above floor level. Expansion joint location to match railing joint location.

D. Fabrication:

1. Angles, offsets, other changes in alignment, and joining of posts and rails shall be made with mechanically fastened connections. Miter and weld joints by fitting post to top rail and intermediate rail to post, mitering corners, groove welding joints, and grinding smooth. Run top rails continuously over post.

2. Rail splices shall be butted and reinforced by tight fitting interior sleeve not less than 6 inch long.

3. Fabricate wall railings with wall brackets for intermediate support and wall return fittings at ends. Brackets and end fittings shall be of cast or formed metal of same material and finish as supported rails and shall be of proper size to provide 3 inch clear space between wall and railing. Provide wall brackets not more than 5 feet on center.

4. Provide expansion joint splices at 30 feet maximum spacing, with slip joint internal sleeve extending minimum of 4 inch beyond each side of joint. Weld to one side only. Locate within 12 inch of posts.

5. Where spacing is not shown, space posts not more than 4 feet on center. Erect posts plumb in each direction.

6. Fabricate joints which will be exposed to weather so as to exclude water. Provide weep holes at the lowest possible point on all railing system posts.

7. Weld posts, to be mounted on top of stair stringers, to aluminum angle brackets. Fasten brackets to stringers with 1/2-inch diameter stainless steel bolts.

8. Side mount guard rail posts, to concrete. Weld to extruded aluminum brackets. Secure brackets to concrete with four 1/2-inch diameter stainless steel expansion bolts.

9. Set posts into concrete curbs, and into preformed holes. Secure in place with nonshrinking non-metallic grout. Provide holes at least 1 inch greater in diameter than outside diameter of posts and minimum of 6 inches deep.

E. Railings at walls shall be single member.

1. Support wall rails on brackets spaced not more than 4 feet on center and at each end of rail. Cantilevered extensions not allowed.

F. Anchorage:

1. Interior Railings: Provide concrete anchorage for posts by means of pipe sleeves set into concrete. Sleeves shall be pipe of inside diameter of approximately 1/2-inch more than outside diameter of post, not less than 6 inches long, and having closure plate secured to bottom of sleeve. Wedge posts into sleeves as required. Fill space between post and sleeve solid with nonshrink nonmetallic grout. Slightly taper top of grout away from posts.

2. Interior Railings: Provide concrete anchorage for posts by means of base flange welded to post and anchored to concrete with minimum of 4 concrete anchors.

3. Masonry Anchorage for Rail Ends and wall Railings: Cast or formed metal of same material and finish as supported rails welded, bolted or threaded to rail ends and anchored into wall with minimum of two concrete anchors.

4. For posts set on stair or platform stringers, provide base flange welded to post and bolted to stringer with minimum of two 1/2-inch bolts, or weld post to stringer.

G. Removable Railings: Install removable railing units free-standing in close fitting pipe sleeves, unattached to other railing units and adjoining work unless otherwise indicated.

H. Handrail Extension Pole: Provide extendable 1-1/2 inch diameter Aluminum handrail pole mounted to stair guardrail as indicated on drawings. A pull up loop shall be provided at the upper end of the pole to facilitate raising the pole. A spring balancing mechanism shall be provided to provide smooth, easy, controlled operation when raising and lowering the handrail pole.

I. Finishes:

1. Aluminum Association Finish Designation: AA-M12A41 (Mechanical finish, nonspecular, anodic coating, architectural Class I, clear coating 0.7 mil complying with AAMA 607.1 on exposed surfaces.

a. Extruded Components: 0.7 mil anodized.

b. Cast Components: 0.4 mil anodized.

2.14 STRAP ANCHORS AND STUD ANCHORS:

A. Provide anchors for frames, curbs, and other metal fabrications anchored into concrete. Fabricate anchors from strap iron, bent to shape, or of weldable studs, welded to backs of members. Where size and spacing not noted, provide 1 inch by 1/4-inch strap anchors or 3/4-inch diameter studs for concrete. Space concrete anchors at 3 feet on center.

B. Where anchors and plates or clips are to be built in for attachment of later Work, provide bolts in plates or clips, welded to back, with threaded ends extended.

C. For attaching Work to concrete where anchors or inserts cannot be built in, provide concrete anchors or machine bolts and screws.

2.15 NEOPRENE GASKET:

A. Provide soft, closed-cell neoprene gasket material suitable for exposure to sewage and sewage gases conforming to ASTM D1056, Type 2, Class C, and Grade 1.

B. Unless otherwise shown on Contract Drawings, provide neoprene gaskets with a minimum thickness of 1/4-inch.

C. Furnish neoprene gaskets without skin coat.

2.16 MANHOLE STEPS:

A. Manufacturers:

1. Aluminum:

a. Neenah Foundry Inc., Type R-1982-W

b. Campbell.

2. Cast Iron:

a. Neenah Foundry Inc., Type R-1980-J.

b. Campbell, Type Pattern 2581.

3. Plastic Coated Steel:

a. 3/8-inch diameter steel reinforcing rod with molded plastic cover.

B. General:

1. Provide aluminum for wet wells, cast-in-place manholes, and where shown, except noted below for precast manholes. Separate dissimilar metals.

2. Provide cast iron or plastic coated steel for precast manholes only.

2.17 MANHOLE COVERS AND FRAMES:

A. Manufacturers:

1. Neenah Foundry Inc.

2. Campbell.

B. General:

1. Assemblies shall be of dimension and type as shown on Contract Drawings.

2.18 STEEL BOLLARDS:

A. 6-inch diameter ASTM A53, Schedule 80 seamless, galvanized steel pipe filled solidly with Class A concrete, slope top 15 degrees as indicated.

B. Weld 1-inch thick galvanized steel plate to pipe bottom and provide four (4) holes for galvanized steel expansion bolts and washers as indicated.

2.19 STOP PLANK GROOVES:

A. Manufacturers:

1. Neenah Foundry Inc., Type R-7500 Type A.

B. Cast iron or ductile iron stop plank grooves.

2.20 ALUMINUM FLOOR HATCHES AND FRAMES:

A. Manufacturers:

1. Bilco Co., New Haven, CT.

2. Babcock-Davis Associates, Inc., Arlington, MA.

3. Milcor Inc., Lima, OH.

4. Or acceptable equivalent product.

B. Provide floor hatches of the types and sizes indicated as specified.

C. Fabricate hatches and frames with 1/4-in. extruded aluminum channel frames with anchor flange around the perimeter and 1/4-in. diamond checkered aluminum plate covers.

D. Reinforce covers to withstand a 300 psf uniform live load except where indicated, provide hatches and frames.

E. Fabricate gutter type (watertight) hatches with a 1-1/2-in. drainage coupling in one corner of the channel frame.

F. Provide hatches with hinges, compression spring operators enclosed in telescopic tubes, hold-open safety-lock bars and flush lift handles; factory assembled; and shipped complete for installation.

G. Provide Type 316 stainless steel fasteners.

2.21 FABRICATION:

A. Connections and Workmanship:

1. Fabricate details and connection assemblies in accordance with Contract Drawings and Specifications, with projecting corners clipped and filler pieces welded flush.

2. Fit work together in fabrication shop and deliver complete or in parts, ready to be set in-place or assembled in field

3. Provide work true to detail; with clean, straight, sharply defined profiles and smooth surfaces of uniform color and texture free from defects impairing strength or durability.

4. Provide clips, lugs, brackets, straps, plates, bolts, nuts, washers, and similar items, as required for fabrication and erection.

5. Provide castings of uniform quality, free from blowholes, porosity, hard spots, shrinkage distortion; smooth and well cleaned by shot blasting.

6. Welding:

a. Provide rigid and continuous welds or spot welded as specified and as shown on Contract Drawing. Dress the face of welds flush and smooth. Close fit exposed joints and locate where least conspicuous.

b. Weld aluminum work on the unexposed side, when possible, in order to prevent pitting or discoloration.

c. Weld aluminum in compliance with the latest edition of AWS D1.2. Support and clamp component parts of built-up members in proper position for welding.

d. Weld shop connections and bolt or field weld connections, unless otherwise specified.

e. Grind exposed edges of welds to 1/8-inch minimum radius. Grind burrs, jagged edges, and surface defects smooth.

f. Prepare welds and adjacent areas so there is:

(1) No undercutting or reverse ridges on weld bead.

(2) No weld spatter on or adjacent to weld or other area to be painted or coated.

(3) No sharp peaks or ridges along weld bead.

7. Bolting:

a. Use bolts of lengths required so bolts do not project more than 1/4-inch beyond face of nut. Do not use washers unless specified. Provide hexagonal head bolts with hexagonal nuts.

b. Provide holes required for connection of adjacent or adjoining work wherever noted on Drawings. Locate holes for bolting equipment to supports to tolerance of +/- 1/16-inch of dimensions indicated.

B. Galvanizing:

1. Galvanize after fabrication by hot-dipped process conforming with ASTM A123.

2. Ship and handle in manner to avoid damage to zinc coating.

C. Shop Painting:

1. Do not paint or coat ferrous metal surfaces embedded in concrete.

2. Comply with Section 09940.

D. Aluminum Finishes:

1. After fabrication, provide interior and exterior aluminum pipe assemblies, kick plates, posts, and ladders with Aluminum Association Standard clear anodized finish, Designation C22A41.

E. Aluminum Protection:

1. Protect aluminum against electrolysis from all sources as specified in Section 01600. Under no circumstances shall aluminum contact a dissimilar metal.

a. Members Encased in Concrete: Zinc chromate primer.

b. Members in Contact with Concrete Masonry or Mortar: Coal tar epoxy.

2. Manufacturers:

a. 46H-413 Hi-Build Tneme Tar by Tnemec Co., Inc.

b. Bitumastic 300M by Carboline Co.

c. Targuard by Sherwin Williams.

d. Or approved equal.

PART 3 - EXECUTION

3.01 EXAMINATION:

A. Upon receipt of material at job site, inspect all materials for shipping damage. Replace damaged items at no cost to Owner.

B. Examine supports for size, layout and alignment.

C. Correct defects considered detrimental to proper installation.

3.02 INSTALLATION:

A. Provide items such as bolts, shims, blocks, nuts, washers, and wedging pieces to complete installation.

B. Erect to lines and levels, plumb and true, and in correct relation to adjoining Work. Secure parts using concealed connections when practicable.

C. Plumb and true vertical members to tolerance of +/- 1/8 inch in 10 feet 0.1 percent. Level horizontal members to tolerance of +/- 1/8 inch in 10 feet 0.1 percent.

D. Use steel bolts to connect structural steel members. Use stainless steel bolts to connect structural aluminum members.

E. Anchor Bolts and Concrete Anchors:

1. Preset anchor bolts using templates. Do not use concrete anchors in place of anchor bolts.

2. After anchor bolts are embedded, protect projecting threads by applying grease and having the nuts installed until the time of installation of equipment or metalwork.

3. Do not install concrete anchors until concrete has reached specified minimum compressive strength.

4. Install concrete anchors in accordance with anchor manufacturer recommendation. Embedment depth of anchor shall be as recommended by the anchor manufacturer, but not less than as shown on Contract Drawings.

5. Locate concrete anchors to clear reinforcing bars in concrete.

F. Weld headed anchor studs in accordance with manufacturer's recommendations.

G. Do not place new holes or enlarge unfair holes by use of cutting torch.

3.03 LADDERS:

A. Anchor uprights to wall with angles or bent plates, weld to uprights and bolt expansion to wall. Ground smooth all welds.

B. Secure interior ladders to floor slabs with floor flanges.

C. Install safety fall arrest system as indicated and in accordance with accepted shop drawings.

D. Install telescoping safety pole securely to ladder below hatch, per manufacturer's recommendations.

3.04 ALUMINUM GRATINGS AND FRAMES:

A. Accurately set and properly secure frames and gratings in place. Where bolted connections are used, draw closely together and draw nuts tightly.

B. Provide standard panel widths.

C. Perform cutting and fitting as required for installation.

D. Place grating panels such that cross bars align.

E. Cutouts for pipes or circular obstructions shall be 2 inch larger in diameter than the diameter of the obstruction.

F. Provide saddle clips, z-clips or other approved fasteners to secure grating at every four square feet. Provide a minimum of four fasteners per grating section.

G. Attachments shall permit removal of the grating panels.

3.05 ALUMINUM PIPE RAILINGS:

A. Set posts plumb and align railings horizontal or parallel to rake of stairs to within 1/4 inch in 10 feet unless otherwise indicated.

B. Install aluminum handrail brackets spaced at a maximum of 4 feet on center.

C. Side mount posts to concrete with aluminum brackets as indicated.

D. Set top mounted posts in concrete curbs into preformed holes.

1. Provide holes at least 1 inch greater in diameter than outside diameter of posts and a minimum of 6 inches deep.

2. Moisten interior of holes and surrounding surfaces.

3. Set railing in position and brace until grout sets.

4. Secure in place with non-metallic, non-shrink grout. Provide 1/8-inch buildup of grout around base of posts, sloped away from posts.

E. Provide butt splice joints with internal sleeves bonded with adhesive.

F. Provide expansion joints at intervals of not more than 32 feet.

1. Locate joints within 6 inches of posts.

2. Provide slip joint with internal sleeve extending 2 inches beyond joint on each side.

3. Fasten internal sleeve securely to one side only.

4. Provide gap of 0.002 inch per foot per degree Fahrenheit

3.06 PAINTING, REPAIR, AND PROTECTION:

A. Protect aluminum in contact with concrete. Under no circumstances shall aluminum contact dissimilar metal.

B. Between aluminum grating, aluminum stair treads, or aluminum handrail brackets and steel supports, insert 1/4-inch thick neoprene isolator pads, 85 +/- 5 Shore A durometer, sized for full width and length of bracket or support.

C. Apply an anti-seize compound on all stainless steel fasteners to prevent galling.

D. Field paint in compliance with Section 09941.

E. Field repair of damaged galvanized coatings:

1. Clean and repair Zinc coating that has been burned by welding, abraded, or otherwise damaged after installation. Clean damage area by wire brushing and removing all traces of welding flux and loose or cracked zinc coating

2. Coat surfaces using zinc-rich paint.

F. Field repair of damaged primer.

1. Touch up abrasions in the shop primer immediately after erection. Paint areas left unprimed for welding with primer after welding.

3.07 CLOSEOUT ACTIVITIES:

A. Provide in accordance with Section 01700.

END OF SECTION

SECTION 05519

POST-INSTALLED CONCRETE ANCHORS

PART 1 - GENERAL

1.01 DESCRIPTION:

A. Provide open drilled in concrete anchors and concrete as indicated and specified.

1.02 REFERENCES:

A. ASTM International (ASTM):

1. ASTM A307: Specification for Carbon Steel Bolts and Studs, 60,000 PSI Tensile Strength

2. ASTM A449: Specification for Quenched and Tempered Steel Bolts and

3. ASTM A563: Specification for Carbon and Alloy Steel Nuts

4. ASTM F436: Standard Specification for Hardened Steel Washers

5. ASTM A36: Specification for Carbon Structural Steel

6. ASTM A193: Standard Specification for Alloy-Steel and Stainless Steel Bolting for High Temperature or High Pressure Service and Other Special Purpose Applications

7. ASTM A510: Standard Specification for General Requirements for Wire Rods and Coarse Round Wire, Carbon Steel, and Alloy Steel

8. ASTM F593: Standard Specification for Stainless Steel Bolts, Hex Cap Screws, and Studs

9. ASTM F594: Standard Specification for Stainless Steel Nuts

10. Reinforcing Dowels: ASTM A615

1.03 SUBMITTALS:

A. Submit the following after award.

1. Product specifications with recommended design values and physical characteristics for epoxy dowels, expansion and undercut anchors.

2. Quality Assurance Submittals:

a. Test Reports: Certified test reports showing compliance with specified performance characteristics and physical properties.

b. Certificates: ICC ES Evaluation Reports.

3. Manufacturer's installation instructions.

4. Installer Qualifications & Procedures: Submit installer qualifications as stated in Section 1.03.B. Submit a letter of procedure stating method of drilling, the product proposed for use, the complete installation procedure, manufacturer training date, and a list of the personnel to be trained on anchor installation.

B. ICC ESR document for each type and size of anchor to be installed in the work.

1.04 QUALITY ASSURANCE:

A. Comply with the requirements specified in Section 01400.

1. Installer Qualifications:

a. Drilled-in anchors shall be installed by an installer with at least five years of experience performing similar installations.

2. Installer Training: Conduct a thorough training with the manufacturer or the manufacturer's representative for the installer on the project. Training to consist of a review of the complete installation process for drilled-in anchors, to include but not limited to:

a. hole drilling procedure

b. hole preparation & cleaning technique

c. adhesive injection technique & dispenser training / maintenance

d. rebar dowel preparation and installation

e. proof loading/torqueing

3. Certifications: Unless otherwise authorized by the Engineer, anchors shall have one of the following certifications:

a. ICC ES Evaluation Report indicating conformance with current applicable ICC ES Acceptance Criteria.

1.05 DELIVERY STORAGE AND HANDLING:

A. Comply with the requirements specified in Section 01610.

B. Store anchors in accordance with manufacturer's recommendations.

PART 2 - PRODUCTS:

2.01 FASTENERS AND ANCHORS:

A. Bolts and Studs: ASTM A307; ASTM A449 where "high strength" is indicated on the Drawings.

B. Carbon and Alloy Steel Nuts: ASTM A563.

C. Carbon Steel Washers: ASTM F436.

D. Carbon Steel Threaded Rod: ASTM A36; or ASTM A193 Grade B7; or ISO 898 Class 5.8.

E. Wedge Anchors: ASTM A510; or ASTM A108.

F. Stainless Steel Bolts, Hex Cap Screws, and Studs: ASTM F593.

G. Stainless Steel Nuts: ASTM F594.

H. Zinc Plating: ASTM B633.

I. Hot-Dip Galvanizing: ASTM A153.

J. Reinforcing Dowels: ASTM A615

2.02 DRILLED-IN ANCHORS

A. Cartridge Injection Adhesive Anchors: Threaded steel rod, inserts or reinforcing dowels, complete with nuts, washers, polymer or hybrid mortar adhesive injection system, and manufacturer's installation instructions. Type and size as indicated on Drawings.

1. Interior Use: Unless otherwise indicated on the Drawings, provide carbon steel threaded rods conforming to ASTM A36, ASTM A 193 Type B7 or ISO 898 Class 5.8 with zinc plating in accordance with ASTM B633, Type III Fe/Zn 5 (SC1) [or carbon steel HIT TZ rods conforming to ASTM A510 with chemical composition of AISI 1038].

2. Exterior Use: As indicated on the Drawings, provide stainless steel anchors. Stainless steel anchors shall be AISI Type 316 stainless steel provided with stainless steel nuts and washers of matching alloy group and minimum proof stress equal to or greater than the specified minimum full-size tensile strength of the externally threaded fastener. All nuts shall conform to ASTM F594 unless otherwise specified. Avoid installing stainless steel anchors in contact with galvanically dissimilar metals.

3. Reinforcing dowels shall be A615 Grade 60.

4. Where anchor manufacturer is not indicated, subject to compliance with requirements and acceptance by the Engineer, provide the following:

    a. Hilti HAS threaded rods with HIT-HY 200 Safe Set System using Hilti Hollow Drill Bit System for anchorage to concrete, ICC ESR-3187.

    b. Hilti HIT-Z anchor rods with HIT-HY 200 Safe Set System for anchorage to concrete, ICC ESR-3187.

    c. Hilti HAS threaded rods with RE 500 SD Injection Adhesive Anchoring System for anchorage to concrete, ICC ESR-2322.

    d. Hilti HAS threaded rods with RE 500 Injection Adhesive Anchoring System for anchorage to concrete.

    e. Or equal

5. Reinforcing dowels shall be A615 Grade 60.

6. Where anchor manufacturer is not indicated, subject to compliance with requirements and acceptance by the Engineer, provide the following:

    a. Hilti HAS threaded rods with HIT-HY 200 Safe Set System using Hilti Hollow Drill Bit System for anchorage to concrete, ICC ESR-3187.

    b. Hilti HIT-Z anchor rods with HIT-HY 200 Safe Set System for anchorage to concrete, ICC ESR-3187.

    c. Hilti HAS threaded rods with RE 500 SD Injection Adhesive Anchoring System for anchorage to concrete, ICC ESR-2322.

    d. Hilti HAS threaded rods with RE 500 Injection Adhesive Anchoring System for anchorage to concrete.

    e. Or equal

PART 3 - EXECUTION

3.01 DRILLED-IN ANCHORS:

A. Drill holes with rotary impact hammer drills using carbide-tipped bits or hollow drill bit system. Drill bits shall be of diameters as specified by the anchor manufacturer. Unless otherwise shown on the Drawings, all holes shall be drilled perpendicular to the concrete surface.

1. Cored Holes: Where anchors are permitted to be installed in cored holes, use core bits with matched tolerances as specified by the manufacturer. Properly clean cored hole per manufacturer's instructions.

2. Embedded Items: Identify position of reinforcing steel and other embedded items prior to drilling holes for anchors. Exercise care in coring or drilling to avoid damaging existing reinforcing or embedded items. Notify the Engineer if reinforcing steel or other embedded items are encountered during drilling. Take precautions as necessary to avoid damaging prestressing tendons, electrical and telecommunications conduit, and gas lines.

3. Base Material Strength: Unless otherwise specified, do not drill holes in concrete or masonry until concrete, mortar, or grout has achieved full design strength.

B. Perform anchor installation in accordance with manufacturer instructions.

C. Cartridge Injection Adhesive Anchors: Clean all holes per manufacturer instructions to remove loose material and drilling dust prior to installation of adhesive. Inject adhesive into holes proceeding from the bottom of the hole and progressing toward the surface in such a manner as to avoid introduction of air pockets in the adhesive. Follow manufacturer recommendations to ensure proper mixing of adhesive components. Sufficient adhesive shall be injected in the hole to ensure that the annular gap is filled to the surface. Remove excess adhesive from the surface. Shim anchors with suitable device to center the anchor in the hole. Do not disturb or load anchors before manufacturer specified cure time has elapsed.

D. Observe manufacturer recommendations with respect to installation temperatures for cartridge injection adhesive anchors and capsule anchors.

3.02 REPAIR OF DEFECTIVE WORK

A. Remove and replace misplaced or malfunctioning anchors. Fill empty anchor holes and patch failed anchor locations with high-strength non-shrink, nonmetallic grout. Anchors that fail to meet proof load or installation torque requirements shall be regarded as malfunctioning.

3.03 FIELD QUALITY CONTROL

A. Testing: 10% of each type and size of drilled-in anchor shall be proof loaded by the independent testing laboratory. Adhesive anchors and capsule anchors shall not be torque tested unless otherwise directed by the Engineer. If any of the tested anchors fail to achieve the specified torque or proof load within the limits as defined on the Drawings, all anchors of the same diameter and type as the failed anchor shall be tested, unless otherwise instructed by the Engineer.

1. Tension testing should be performed in accordance with ASTM E488.

2. Torque shall be applied with a calibrated torque wrench.

3. Proof loads shall be applied with a calibrated hydraulic ram. Displacement of adhesive and capsule anchors at proof load shall not exceed D/10, where D is the nominal anchor diameter.

B. Minimum anchor embedment, proof loads and torques shall be as recommended by the manufacturer.

3.04 CLOSEOUT ACTIVITIES:

A. Provide in accordance with Section 01700.

END OF SECTION

SECTION 07140

COLD FLUID-APPLIED WATERPROOFING

PART 1 – GENERAL

1.01 DESCRIPTION:

A. Provide cold fluid-applied waterproofing, protection course and accessories as indicated and specified.

1.02 RELATED WORK:

A. Section 07180: Traffic Coatings for polyurethane traffic coatings.

1.03 REFERENCES:

A. ASTM International (ASTM):

1. ASTM C 578: Specification for Rigid, Cellular Polystyrene Thermal Insulation.

2. ASTM C 836: Specification for High Solids Content, Cold Liquid-Applied. Elastomeric Waterproofing Membrane for Use with Separate Wearing Course.

3. ASTM C 898: Guide for Use of High Solids Contents, Cold Liquid-Applied Elastomeric Waterproofing Membrane with Separate Wearing Course.

4. ASTM C 920: Specification for Elastomeric Joint Sealants

5. ASTM C 1193: Guide for Use of Joint Sealants.

6. ASTM D 4258: Practice for Surface Cleaning Concrete for Coating.

7. ASTM D 4263: Test Method for Indicating Moisture in Concrete by the Plastic Sheet Method.

1.04 SUBMITTALS:

A. Submit the following in accordance with Section 01300:

1. Product Data: Include manufacturer's written instructions for evaluating, preparing, and treating substrate, technical data, and tested physical and performance properties of waterproofing.

2. Product data from waterproofing manufacturer stating the specified VOC content and compliance.

3. Shop Drawings: Show locations and extent of waterproofing. Include details for substrate joints and cracks, sheet flashings, penetrations, inside and outside corners, tie-ins with adjoining waterproofing, and other termination conditions.

4. Samples: For the following products:

   a. 12-by-12-inch square of flashing sheet.
   b. 12-by-12-inch square of protection course.

B. Installer Certificates: Signed by manufacturers certifying that installers comply with requirements.

C. Product Test Reports: From a qualified independent testing agency indicating and interpreting test results of waterproofing for compliance with requirements, based on comprehensive testing of current waterproofing formulations.

D. Sample Warranty: Copy of special waterproofing manufacturer's and Installer's warranty stating obligations, remedies, limitations, and exclusions before starting waterproofing.

1.05 QUALITY ASSURANCE:

A. Provide in accordance with Section 01400 and as specified.

B. Installer Qualifications: A qualified installer who is authorized, approved, or licensed by waterproofing manufacturer to install manufacturer's products.

C. Source Limitations: Obtain waterproofing materials and protection course through one source from a single manufacturer.

D. Preinstallation Conference: Before installing waterproofing, conduct conference at Project site to comply with requirements of Section 01200. Review requirements for waterproofing, including surface preparation specified under other Sections, substrate condition and pretreatment, minimum curing period, forecasted weather conditions, special details and sheet flashings, installation procedures, testing and inspection procedures, and protection and repairs.

1. Provide the on-site services of the waterproofing manufacturer’s technical representative for the duration of the application of cold-fluid applied

waterproofing to assist the installer with regard to the items stated above in paragraph D.

1.06 DELIVERY, STORAGE, AND HANDLING:

A. Provide in accordance with Section 01610 and as specified.

B. Deliver liquid materials to Project site in original containers with seals unbroken, labeled with manufacturer's name, product brand name and type, date of manufacture, shelf life, and directions for storing and mixing with other components.

C. Store liquid materials in their original undamaged containers in a clean, dry, protected location and within the temperature range required by waterproofing manufacturer.

D. Remove and replace liquid materials that cannot be applied within their stated shelf life.

E. Protect stored materials from direct sunlight.

1.07 SITE CONDITIONS:

A. Environmental Limitations: Apply waterproofing within the range of ambient and substrate temperatures recommended by waterproofing manufacturer. Do not apply waterproofing to a damp or wet substrate, when relative humidity exceeds 85 percent, or when temperatures are less than 5 deg F above dew point.

1. Do not apply waterproofing in snow, rain, fog or mist, or when such weather conditions are imminent during application and curing period.

B. Maintain adequate ventilation during application and curing of waterproofing materials.

1.08 WARRANTY:

A. Special Manufacturer's Warranty: Written warranty, signed by waterproofing manufacturer and installer agreeing to repair or replace waterproofing that does not comply with requirements or that does not remain watertight within specified warranty period.

1. Warranty does not include failure of waterproofing due to failure of substrate prepared and treated according to requirements or formation of new joints and cracks in substrate that exceed 1/16 inch in width.

2. Warranty Period: Five years after date of Substantial Completion.

B. Special Installer's Warranty: Written waterproofing Installer's warranty, signed by Installer, covering Work of this Section, for warranty period of two years.

PART 2 - PRODUCTS

2.01 GENERAL:

A. Provide waterproofing materials recommended by manufacturer to be compatible with one another and able to develop bond to substrate under conditions of service and application, as demonstrated by waterproofing manufacturer based on testing and field experience.

1. Produce waterproofing materials suitable for application to vertical, horizontal, and sloped substrates, as applicable.

2. Provide waterproofing materials with not less than 85 percent solids.

2.02 MANUFACTURERS:

A. Carlisle Corporation, Carlisle Coatings & Waterproofing Div.; CCW-525.

B. Sika; MasterSeal HLM 5000

C. Tremco; Tremproof 201/60.

D. Or acceptable equivalent product.

2.03 COLD FLUID-APPLIED WATERPROOFING:

A. Comply with ASTM C 836, with manufacturer’s written physical requirements, and as follows:

1. Single-component, modified polyurethane waterproofing.

2. VOC Content: 95 g/L or less.

2.04 AUXILIARY MATERIALS:

A. Primer: Manufacturer's standard, factory-formulated polyurethane or epoxy primer.

B. Sheet Flashing: 50-mil- minimum, nonstaining uncured sheet neoprene.

1. Adhesive: Manufacturer's recommended contact adhesive.

C. Reinforcing Strip: Manufacturer's recommended fiberglass mesh or polyester fabric.

D. Joint Sealant: Multicomponent polyurethane sealant, compatible with waterproofing, complying with ASTM C 920 Type M, Class 25; Grade NS for sloping and vertical applications or Grade P for deck applications; Use NT exposure; and as recommended by manufacturer for substrate and joint conditions.

E. Backer Rod: Closed-cell polyethylene foam.

F. Protection Course: Unfaced, extruded-polystyrene board insulation; ASTM C 578 Type X, 1/2-in. thick.

1. Recycled Content: Provide extruded polystyrene board insulation with recycled content so postconsumer recycled content plus one-half of preconsumer recycled content is not less than thirty (30) percent.

PART 3 - EXECUTION

3.01 EXAMINATION:

A. Examine substrates, areas, and conditions, with Installer present, for compliance with requirements and other conditions affecting performance.

1. Verify that concrete has cured and aged for minimum time period recommended by waterproofing manufacturer.

2. Verify that substrate is visibly dry and free of moisture. Test for capillary moisture by plastic sheet method according to ASTM D 4263.

3. Proceed with installation only after unsatisfactory conditions have been corrected.

3.02 SURFACE PREPARATION:

A. Clean and prepare substrate according to manufacturer's written recommendations. Provide clean, dust-free, and dry substrate for waterproofing application.

B. Mask off adjoining surfaces not receiving waterproofing to prevent spillage or overspray affecting other construction.

C. Close off deck drains and other deck penetrations to prevent spillage and migration of waterproofing fluids.

D. Remove grease, oil, bitumen, form-release agents, paints, curing compounds, and other penetrating contaminants or film-forming coatings from concrete.

E. Remove fins, ridges, and other projections and fill honeycomb, aggregate pockets, and other voids.

3.03 PREPARATION AT TERMINATIONS AND PENETRATIONS:

A. Prepare vertical and horizontal surfaces at terminations and penetrations through waterproofing and at expansion joints, drains, and sleeves according to ASTM C 898 and manufacturer's written instructions.

B. Prime substrate, unless otherwise instructed by waterproofing manufacturer.

C. Apply a double thickness of waterproofing and embed a joint reinforcing strip in preparation coat when recommended by waterproofing manufacturer.

1. Provide sealant cants around penetrations and at inside corners of deck-to-wall butt joints when recommended by waterproofing manufacturer.

3.04 JOINT AND CRACK TREATMENT:

A. Prepare, treat, rout, and fill joints and cracks in substrate according to ASTM C 898 and waterproofing manufacturer's written instructions. Remove dust and dirt from joints and cracks complying with ASTM D 4258 before coating surfaces.

1. Comply with ASTM C 1193 for joint-sealant installation.

2. Apply bond breaker between sealant and preparation strip.

3. Prime substrate and apply a single thickness of preparation strip extending a minimum of 3 inches along each side of joint. Apply a double thickness of waterproofing and embed a joint reinforcing strip in preparation coat.

B. Install sheet flashing and bond to deck and wall substrates where indicated or required according to waterproofing manufacturer's written instructions.

1. Extend sheet flashings onto perpendicular surfaces and other work penetrating substrate according to ASTM C 898.

3.05 WATERPROOFING APPLICATION:

A. Apply waterproofing according to ASTM C 898 and manufacturer's printed instructions and approved shop drawings.

B. Start application of waterproofing in presence of manufacturer's technical representative.

C. Apply primer over prepared substrate.

D. Mix materials and apply waterproofing by spray, roller, notched squeegee, trowel, or other application method suitable to slope of substrate.

1. Apply one or more coats of waterproofing to obtain a seamless membrane free of entrapped gases, with an average dry film thickness of 60 mils and a minimum dry film thickness of 50 mils at any point.

2. Apply waterproofing to prepared wall terminations and vertical surfaces.

3. Verify wet film thickness of waterproofing every 100 sq. ft.

E. Install protection course with butted joints over nominally cured membrane before starting subsequent construction operations.

3.06 CURING, PROTECTING, AND CLEANING:

A. Cure waterproofing according to manufacturer's written recommendations, taking care to prevent contamination and damage during application stages and curing.

B. Protect waterproofing from damage and wear during remainder of construction period.

C. Clean spillage and soiling from adjacent construction using cleaning agents and procedures recommended by manufacturer of affected construction.

3.07 CONTRACT CLOSEOUT:

A. Provide in accordance with Section 01700.

END OF SECTION

SECTION 07180

TRAFFIC COATINGS

PART 1 – GENERAL

1.01 DESCRIPTION:

A. Provide traffic coatings and accessories as indicated and specified.

1.03 REFERENCES:

A. ASTM International (ASTM):

1. ASTM C 920: Specification for Elastomeric Joint Sealants.

2. ASTM C 957: Specification for High-Solids Content, Cold Liquid-Applied Elastomeric Waterproofing Membrane with Integral Wearing Surface.

3. ASTM C 1127: Guide for Use of High Solids Content, Cold Liquid-Applied Elastomeric Waterproofing Membrane with an Integral Wearing Surface.

4. ASTM C 1193: Guide for Use of Joint Sealants.

5. ASTM D 4258: Practice for Surface Cleaning Concrete for Coating.

6. ASTM D 4259: Practice for Abrading Concrete.

7. ASTM D 4263: Test Method for Indicating Moisture in Concrete by the Plastic Sheet Method.

8. ASTM E 108: Test Methods for Fire Tests of Roof Coverings.

1.04 SUBMITTALS:

A. Submit the following in accordance with Section 01300:

1. Product Data: For each product indicated.

2. Shop Drawings: Show extent of each traffic coating. Include details for treating substrate joints and cracks, flashings, deck penetrations, and other termination conditions.

3. Samples for Initial Selection: Manufacturer's color charts showing the full range of colors, textures, and patterns available for each type of product indicated.

4. Samples for Verification: For each type of traffic coating required, prepared on rigid backing and of same thickness and material indicated for the Work.

   a. Provide stepped samples on backing large enough to illustrate build-up of traffic coatings.

5. Material Test Reports: From a qualified independent testing agency indicating and interpreting test results for compliance of traffic coatings with requirements, based on comprehensive testing of current product formulations within the last three years.

6. Material Certificates: Signed by manufacturer certifying that traffic coatings comply with requirements, based on comprehensive testing of current product formulations within the last three years.

7. Maintenance Data: To include in maintenance manuals specified in Division 1. Identify substrates and types of traffic coatings applied. Include recommendations for periodic inspections, cleaning, care, maintenance, and repair of traffic coatings.

1.05 QUALITY ASSURANCE:

A. Provide in accordance with Section 01400 and as specified.

B. Installer (Applicator) Qualifications: An experienced applicator who has specialized in installing work similar in material, design, and extent to that indicated for this Project and who is certified by manufacturer.

   1. Certification: Written approval or license of applicator by traffic coating manufacturer.

C. Source Limitations: As follows:

   1. Use traffic coatings of a single manufacturer.

   2. Obtain primary traffic coating materials, including primers, from traffic coating manufacturer. Obtain secondary materials including aggregates, sheet flashings, joint sealants, and substrate repair materials of type and from source recommended by traffic coating manufacturer.

D. Mockups: Engineer will select one representative surface for each traffic coating and each substrate to receive traffic coatings. Apply each coating to at least 200 sq. ft. of

each substrate to demonstrate surface preparation, joint and crack treatment, thickness, texture, color, and standard of workmanship.

1. Remove and reapply mockups until they are approved by Engineer.

2. Keep approved mockups undisturbed during construction as a standard for judging completed traffic coatings. Undamaged mockups may be incorporated into the Work.

E. Preinstallation Conference: Conduct conference at Project site to comply with requirements of Section 01200 - Project Meetings.

1. Before installing traffic coatings, meet with representatives of authorities having jurisdiction, manufacturer's technical representative, Owner, Engineer, consultants, independent testing agency, and other concerned entities. Review requirements for traffic coatings. Notify participants at least seven days before conference.

1.06 DELIVERY, STORAGE, AND HANDLING:

A. Provide in accordance with Section 01610 and as specified.

B. Deliver materials in original packages and containers with seals unbroken and bearing manufacturer's labels showing the following information:

1. Manufacturer's brand name.

2. Type of material.

3. Directions for storage.

4. Date of manufacture and shelf life.

5. Lot or batch number.

6. Mixing and application instructions.

7. Color.

C. Store materials in a clean, dry location protected from exposure to direct sunlight. In storage areas, maintain environmental conditions within range recommended in writing by manufacturer.

1.07 SITE CONDITIONS:

A. Environmental Limitations: Apply traffic coatings within the range of ambient and substrate temperatures recommended in writing by manufacturer. Do not apply traffic coatings to damp or wet substrates, when temperatures are below 40 deg F, when relative humidity exceeds 85 percent, or when temperatures are less than 5 deg F above dew point.

1. Do not apply traffic coatings in snow, rain, fog, or mist, or when such weather conditions are imminent during the application and curing period. Apply only when frost-free conditions occur throughout the depth of the substrate.

1.08 WARRANTY:

A. General Warranty: Special warranty specified in this Article shall not deprive Owner of other rights Owner may have under other provisions of the Contract Documents and shall be in addition to, and run concurrent with, other warranties made by Contractor under requirements of the Contract Documents.

B. Special Warranty: Written warranty, signed by traffic coating manufacturer agreeing to repair or replace traffic coatings that do not comply with requirements or that deteriorate during the specified warranty period. Warranty does not include deterioration or failure of traffic coating due to unusual weather phenomena, failure of prepared and treated substrate, formation of new substrate cracks exceeding 1/16 inch in width, fire, vandalism, or abuse by snowplow, maintenance equipment, and truck traffic.

1. Deterioration of traffic coatings includes, but is not limited to, the following:

a. Adhesive or cohesive failures.

b. Abrasion or tearing failures.

c. Surface crazing or spalling.

d. Intrusion of water, oils, gasoline, grease, salt, deicer chemicals, or acids into deck substrate.

C. Warranty Period: Five years from date of Substantial Completion.

PART 2 - PRODUCTS

2.01 GENERAL:

A. Physical Requirements: Provide traffic coatings complying with ASTM C 957.

B. Material Compatibility: Provide primers; base, intermediate, and top coats; and miscellaneous materials that are compatible with one another and with substrate under conditions of service and application, as demonstrated by the manufacturer based on testing and field experience.

2.02 TRAFFIC COATING:

A. Primer: Manufacturer's standard factory-formulated primer recommended for substrate and conditions indicated.

B. Preparatory and Base Coats: Single- or multicomponent aromatic liquid urethane elastomer.

C. Top Coat: Single or multicomponent aromatic liquid urethane elastomer or single- or multicomponent aliphatic liquid urethane elastomer.

1. Color: As selected by Engineer from manufacturer's full range of colors.

D. Component Coat Thicknesses: As recommended by manufacturer for substrate and service conditions indicated, but not less than the following (measured excluding aggregate):

1. Base Coat: 24 mils.
2. Top Coat: 16 mils.

E. Aggregate: Uniformly graded washed silica sand or walnut shell granules of particle sizes, shape, and minimum hardness recommended in writing by traffic coating manufacturer.

1. Spreading Rate: As recommended by manufacturer for substrate and service conditions indicated, but not less than the following:

a. Top Coat: 8 to 10 lb/100 sq. ft.

F. Manufacturers: Subject to compliance with requirements, provide one of the following:

1. Pacific Polymers ELASTO-DECK 5000 WDA.

2. Dex-O-Tex/Crossfield Products Corp. Elastex 500.

3. Gaco Western, Inc. GacoAutoDeck system.

4. Or acceptable equivalent product.

2.03 MISCELLANEOUS MATERIALS:

A. Sheet Flashing: 60-mil minimum, nonstaining sheet material recommended by manufacturer.

B. Adhesive: Manufacturer's recommended contact adhesive.

C. Reinforcing Strip: Manufacturer's recommended fiberglass mesh.

PART 3 - EXECUTION

3.01 EXAMINATION:

A. Examine substrates, with Applicator present, for compliance with requirements and for other conditions affecting performance of traffic coatings.

B. Verify compatibility with and suitability of substrates.

C. Begin coating application only after minimum concrete curing and drying period recommended by traffic coating manufacturer has passed, after unsatisfactory conditions have been corrected, and after surfaces are dry.

D. Verify that substrates are visibly dry and free of moisture. Test for moisture by plastic sheet method according to ASTM D 4263.

E. Application of coating indicates acceptance of surfaces and conditions.

3.02 PREPARATION:

A. Clean and prepare substrates according to manufacturer's written recommendations to produce clean, dust-free, dry substrate for traffic coating application.

B. Mask adjoining surfaces not receiving traffic coatings, deck drains, and other deck substrate penetrations to prevent spillage, leaking, and migration of coatings.

C. Concrete Substrates: Mechanically abrade concrete surfaces to a uniform profile according to ASTM D 4259. Do not acid etch.

1. Remove grease, oil, paints, and other penetrating contaminants from concrete.

2. Remove concrete fins, ridges, and other projections.

3. Remove laitance, glaze, efflorescence, curing compounds, concrete hardeners, form-release agents, and other incompatible materials that might affect coating adhesion.

4. Remove remaining loose material to provide a sound surface, and clean surfaces according to ASTM D 4258.

3.03 TERMINATIONS AND PENETRATIONS:

A. Prepare vertical and horizontal surfaces at terminations and penetrations through traffic coatings and at expansion joints, drains, and sleeves according to ASTM C 1127 and manufacturer's written recommendations.

B. Provide sealant cants at penetrations and at reinforced and nonreinforced deck-to-wall butt joints.

C. Terminate edges of deck-to-deck expansion joints with preparatory base-coat strip.

D. Install sheet flashings at deck-to-wall expansion and dynamic joints, and bond to deck and wall substrates according to manufacturer's written recommendations.

3.04 JOINT AND CRACK TREATMENT:

A. Prepare, treat, rout, and fill joints and cracks in substrates according to ASTM C 1127 and traffic coating manufacturer's written recommendations. Before coating surfaces, remove dust and dirt from joints and cracks according to ASTM D 4258.

3.05 TRAFFIC COATING APPLICATION:

A. Apply traffic coating material according to ASTM C 1127 and manufacturer's written recommendations.

1. Start traffic coating application in presence of manufacturer's technical representative.

2. Verify that wet film thickness of each component coat complies with requirements every 100 sq. ft.

3. Apply traffic coatings to prepared wall terminations and vertical surfaces to top of curbs and omit aggregate on vertical surfaces.

3.06 FIELD QUALITY CONTROL:

A. Testing: Owner will engage a qualified testing agency to perform the following field quality-control testing:

1. Samples of material delivered to Project site shall be taken, identified, sealed, and certified in presence of Owner and Contractor.

2. Testing agency shall perform tests for characteristics specified, using applicable referenced testing procedures or, if not referenced, using tests cited in manufacturer's product data.

3. Testing agency shall verify thickness of coatings during traffic coating application.

B. If test results show traffic coating materials do not comply with requirements, remove noncomplying materials, prepare surfaces, and reapply traffic coatings.

C. Additional testing and inspecting, at Contractor's expense, will be performed to determine compliance of replaced or additional work with specified requirements.

3.07 CURING AND PROTECTING:

A. Cure traffic coatings according to manufacturer's written recommendations. Prevent contamination and damage during application and curing stages.

B. Protect traffic coatings from damage and wear during remainder of construction period.

3.08 CONTRACT CLOSEOUT:

A. Provide in accordance with Section 01700.

END OF SECTION

SECTION 09940

SHOP PAINTING

PART 1 - GENERAL

1.01 DESCRIPTION:

A. Provide labor, materials, equipment and incidentals required for the surface preparation and application of shop primers and finish coats, as specified herein.

1.02 RELATED WORK:

A. Section 09941: Field Painting for painting of shop painted surfaces.

B. Factory prefinished items as specified.

1.03 SUBMITTALS:

A. Submit the following in accordance with Section 01300:

1. Manufacturer's specifications and data on the proposed primers and detailed surface preparation, application procedures and dry mil thicknesses, including list of items and surfaces to receive shop painting.

1.04 DELIVERY, STORAGE AND HANDLING:

A. Provide in accordance with Section 01610 and as specified.

B. Deliver materials to application area in original, unbroken containers, plainly marked with name and analysis of product, manufacturer's name, and shelf lift date. Do not store or use contaminated, outdated, prematurely opened, or diluted materials.

C. Store coated items to prevent damage or dirtying of coatings. Avoid need for special cleaning, and store coated items out of contact with ground or pavement. Place suitable blocking under coated items during storage.

D. Do not expose surfaces to weather for more than six months before being topcoated, or less time if recommended by coating manufacturer.

E. Protect surfaces not to receive paint coatings during surface preparation, cleaning, and painting.

F. Protect coatings from damage during shipment and handling by padding, blocking, use canvas or nylon slings, and use care when handling.

G. At time of delivery of shop painted items to job site, ensure coatings are undamaged and in good condition.

1.05 JOB CONDITIONS:

A. Environmental Requirements:

1. Comply with manufacturer's recommendations as to environmental conditions under which coatings and coating systems can be applied.

2. Do not apply coatings when dust is being generated.

PART 2 - PRODUCTS

2.01 MATERIALS:

A. Coatings are divided into the following service types, as determined by conditions:

1. Non-Potable Water:

a. All ferrous metals not subject to potable water provide one coat with a dry film thickness of 2.5 to 3.0 mils with one of the following or equal:

(1) Series 1 Omnithane by Tnemec Co.

(2) Steel Spec 4012 Universal Prime/Finish by Sherwin Williams (2.5 – 4.0 DFT).

(3) Recoatable Epoxy Primer by Sherwin Williams (4.0 – 6.0 DFT)

(4) Or acceptable equivalent product.

2. Potable Water:

a. Ferrous metals submerged or which are subject to splash action in contact with potable water, provide one coat with a dry mil thickness of 3.0 to 3.5 mils of a certified NSF Standard 61 product by one of the following or equal:

(1) Macropoxy 646 PW Potable Water Epoxy by Sherwin Williams (3.0 – 6.0 DFT)

(2) Corothane I Galvapac Zinc by Sherwin Williams (3.0 – 4.0 DFT)

(3) Aquapon High Build Potable Water Epoxy 95-132 Series made by PPG Protective & Marine Coatings (4.0 – 6.0 DFT).

(4) Or acceptable equivalent product.

B. Shop prime with primers guaranteed by the manufacturer to be compatible with their corresponding primers and finish coats specified in Section 09941 for use in the field and which are recommended for use together.

PART 3 - EXECUTION

3.01 APPLICATION:

A. Surface Preparation and Priming:

1. Sandblast clean in accordance with SSPC-SP-6, Commercial Grade, immediately prior to priming non-submerged components scheduled for priming, as defined above.

2. Sandblast clean in accordance with SSPC-SP-10, Near White, immediately prior to priming submerged components scheduled for priming, as defined above.

3. Before priming, provide surfaces dry and free of dust, oil, grease and other foreign material.

4. Shop prime in accordance with approved manufacturer's printed recommendations.

B. Non-primed Surfaces: Apply approved coating in accordance with manufacturer's printed recommendation.

3.02 TOUCH-UP:

A. Repair or replace damaged or defective coated areas. Resultant shop painting: Paint items as specified.

B. Remove damaged or defective coatings by specified blast cleaning to meet surface cleaning requirements, just before recoating. When small areas of coating need touch up, surface preparation may be done with suitable power needle gun to match specified blast cleaning.

3.03 CONTRACT CLOSEOUT:

A. Provide in accordance with Section 01700.

END OF SECTION

SECTION 09941

FIELD PAINTING

PART 1 – GENERAL

1.01 DESCRIPTION:

A. Provide and apply paints and coatings specified and indicated. Prepare, clean, and finish all surfaces to be field painted as specified and indicated.

1. The terms “paint” and “coating” used herein include emulsions, enamels, paints, stains, varnishes, sealers, and other coatings, organic or inorganic, whether used as intermediate, or finish coats.

2. Stainless steel, copper and PVC piping, fittings and supports will not be field painted, except that identification of piping with stencil text shall be provided by the Work of this Specification section.

3. Provide painting of steel water pipes in accordance as specified in Section 09 97 00 External Steel Pipe Coating Specification.

B. Complete painting and test patches for surfaces in accordance with the Specifications, paint manufacturer's current surface preparation and application instructions and safety requirements. In the event of conflict, the more stringent specifications will apply.

C. Items Not to be Field Painted:

1. The following items with their respective Specification section or Division number will not require field painting:

a. Division 3 – Concrete.

b. Division 15 - HVAC systems specified and indicated on the Drawings

1.02 REFERENCES:

A. Society for Protective Coatings (SSPC) Specifications.

B. SSPC-PA 1: Shop, Field, and Maintenance Painting of Steel.

C. SSPC-PA-2: Measurement of Dry Coating Thickness with Magnetic Gages.

D. SSPC-SP 1: Solvent Cleaning.

E. SSPC-SP 3: Power Tool Cleaning.

F. SSPC-SP 6: Commercial Blast Cleaning.

G. SSPC-SP10: Near-White Blast Cleaning.

H. American National Standards Institute (ANSI):

1. A13.1: Scheme for the Identification of Piping Systems, Designation.

I. National Sanitation Foundation (NSF)

1.03 SUBMITTALS:

A. Submit the following in accordance with Section 01300 and as specified:

1. List of coating products (Paint Schedule) with brand, type and manufacturer including dry film thickness and volatile organic compound (V.O.C.) regulations conforming to these Specifications.

2. Manufacturer's current printed recommendations and data sheets for each product including performance criteria, surface preparation, application instructions.

3. Product data and pertinent information including results of test patch data indicating compatibility of field applied coatings with shop applied primers including a schedule listing each primer with field applied coatings to be applied over the primer.

4. Color chip samples matching colors indicated in Piping Identification Schedule, included in this Specification. Submit list of piping to be included under each color.

5. Submit letter(s) signed by paint manufacturer certifying that submitted products are suitable for application on the surfaces to be coated and for the service conditions.

6. Submit a Certificate of Compliance for coatings submerged in potable water with National Sanitation Foundation approval.

7. Product data for mil thickness testing equipment including operating instructions.

B. Field Submittals:

1. Submit a letter, signed by Contractor, stating that existing and new surfaces to be coated are ready for preparation.

2. Submit letter signed by painting Subcontractor, certifying that existing and new surfaces to be coated have been prepared in accordance with paint manufacturer's printed instructions and are ready for field paint application.

3. Approved mil thickness test results, including location, and surface or item for identification.

4. Provide samples of existing paint coatings to paint manufacturer for identification of existing coatings. Submit to Engineer final recommendations of the paint manufacturer for the proper type of coatings that can be applied to existing surfaces. If the specified paint coating for existing surfaces is not acceptable to paint manufacturer, then the painting Subcontractor and paint manufacturer shall submit the recommended coating at no additional cost to Owner.

1.04 QUALITY ASSURANCE:

A. Provide in accordance with Section 01400 and as specified.

B. Use products of one (1) manufacturer in any one (1) paint coating system with compatible coating materials. Provide same coating product for touch-up as for original coating.

C. Do not use or retain contaminated, outdated, or diluted materials for painting. Do not use materials from previously opened containers.

D. Provide paint products having a minimum of 5 years of service, with no peeling, flaking, chipping, blistering, or fading, under similar service conditions.

1.05 PAINT STORAGE AND MIXING AREAS, AND WASTE DISPOSAL:

A. Store paints and painter's materials in area or areas designated by Engineer solely for this purpose. Confine mixing, thinning, clean-up and associated operations, and storage of painting debris, to these areas before authorized disposal.

B. Do not use plumbing fixtures, piping or mechanical equipment for mixing or disposal of paint materials.

1. Transport water to paint area by temporary hose or piping.

2. Store waste temporarily in closed, nonflammable containers until final disposal. Keep no rubbish in painter's area longer than 24 hours. Legally dispose any hazardous materials and place all non-hazardous waste in the central trash trailer area.

1.06 DELIVERY, STORAGE, AND HANDLING:

A. Contractor will provide storage and protection in accordance with Section 01610 and as specified.

B. Deliver materials to painter's area in original, unbroken, containers with name and analysis of product, manufacturer's name, and shelf life date. Do not use or retain contaminated, outdated, prematurely opened, or diluted materials.

C. Store coated items and protect coating from damage and foreign matter, by not allowing contact with soil or pavement, exposure to wind-blown particles, or other harmful contacts which necessitate special cleaning. Use blocking during storage.

D. Protect coated items, whether prime or finish, from damage due to shipping and handling.

1.07 JOB CONDITIONS:

A. Environmental Requirements:

1. Comply with manufacturer's printed recommendations as to environmental conditions under which coatings and coating systems can be applied.

2. Do not apply coatings when dust is being generated.

B. Protection:

1. Cover or otherwise protect finish work of other trades and surfaces not being painted concurrently or not to be painted.

2. Do not paint over nameplates, tagging or other identification devices.

PART 2 – PRODUCTS

2.01 MANUFACTURERS:

A. Tnemec Co., Inc.

B. Carboline.

C. PPG Protective & Marine Coatings, Inc.

D. The Sherwin-Williams Co.

E. Or approved equal.

2.02 MATERIALS – GENERAL:

A. Products:

1. Recommended by their manufacturer for intended service.

B. Material Compatibility:

1. Provide block fillers, undercoats and finish-coat materials that are compatible with one another, and the substrates indicated under conditions of service and application, as demonstrated by manufacturer based on testing and field experience.

2. Provide field applied coatings that are compatible with shop applied primers.

2.03 COLORS AND FINISHES:

A. Interior finish colors: As indicated in Pipe Identification Schedule and/or as approved by Engineer.

B. To provide contrast between successive coats, lightly tint each coat to distinguish it from preceding coats.

C. Unless otherwise indicated for finish paint, use gloss or semi-gloss on metal and satin finish on masonry and concrete.

2.04 COATING TYPES:

A. Coatings are described in the COATING IDENTIFICATION SCHEDULE by abbreviations, generic type, minimum solids by volume and minimum dry film thickness. Provide coatings that comply with the volatile organic compounds (VOC) regulations applicable to the Project site and in no case to exceed 3.5 lbs/gal.

B. COATING IDENTIFICATION SCHEDULE

ABBR.	GENERIC TYPE	SOLIDS BY VOL. (%)	DFT THICKNESS (PER COAT)	TNEMEC PRODUCT	SHER-WIL PRODUCT	PPG PMC PRODUCT
AL	Emulsified Acrylic	43	2.0-3.0	Series 1026	Pro Industrial Acrylic with DTM Acrylic Primer finish	PPG Pitt-Tech EDF Exterior WB Acrylic Dry Fog 90-812 Series
APE	High Build Acrylic Polyurethane	60/ 74	3.0-5.0	Series 73 1074	Acrolon 218 HS	PPG PITTHANE 95-8800 series
BF	Cementitious Acrylic Filler	68	100 sq. ft. per gal.	Series 130	Cement-Plex 875	PPG Cementitious Waterproofing Block Filler 95-217 Series
HSE	High Solids Catalyzed Epoxy	70	6.0-8.0	Series N69	Macropoxy 646 Epoxy	PPG Pitt-Guard DTR Epoxy Mastic 97-145 Series
PE*	Polyamide Epoxy	60	5.0-7.0	Series 161/ or N69F	Macropoxy 646	PPG Aquapon HB Semi-Gloss 97-130 Series

PVA	Poly Vinyl-Acrylic-	28	2.0-3.0	Series 51-792	ProMar 200	PPG Speedhide 6-2 Primer
ZR	Zinc Rich Primer	63	3.0-3.5	Series 1 Omnithane	Corothane I Galvapac Zinc Primer (Immersion) Zinc Clad IV	PPG Aquapon Zin Rich Primer 97-670 or PPG Metal-Hide 1001 IOZ

* If application of PE type coating occurs during low temperatures, provide and apply LTE type coating in lieu of PE and substitute throughout in Paint Schedule at end of section, unless otherwise recommended by coating manufacturer.

C. Description of coating types includes minimum acceptable percent, by volume, of component solids. Brand identification is to establish standard of quality. Products meeting general physical characteristics and performance criteria are acceptable. Provide coatings submerged in potable water with National Sanitation Foundation approval.

2.05 PIPE COLOR CODING:

A. Provide identification of piping systems by color as specified in the Pipe Identification Color Schedule including the name of contents, directional flow arrows and other required legend.

1. Use stenciled letters and arrows located at intervals no greater than 5 feet apart on straight runs. Each segment of piping shall be stenciled. Mark each branch change in direction.

B. Provide legend of size, character and location conforming to ANSI A13.1 for stenciled letters or labels.

C. Refer to notes at end of Pipe Identification Schedule for further clarifications.

PART 3 – EXECUTION

3.01 HOISTING, SCAFFOLDING, STAGING AND PLANKING:

A. Provide, set-up, and maintain all required derricks, hoisting machinery, scaffolds, and staging and planking, and perform all hoisting required to complete Work of this section as indicated and specified.

B. Scaffolds shall have solid backs and floors to prevent dropping materials therefrom to the floors or ground.

3.02 INSPECTION:

A. Examine existing and new surfaces scheduled to receive paint and finishes for conditions that will adversely affect execution, permanence or quality of Work.

B. Do not proceed with surface preparation or coating application until after submitting to Engineer a letter signed by Contractor, stating that existing and new surfaces to be painted are in acceptable condition for preparation and painting according to the painting Subcontractor and in accordance with paint manufacturer's printed instructions.

C. Do not proceed with coating application until after submitting to Engineer a letter signed by paint manufacturer certifying that submitted products are suitable for application in accordance with paint manufacturer's printed instructions.

3.03 PREPARATION:

A. Basic Steps:

1. Prepare and paint existing and new surfaces in heated enclosure unless the ambient weather conditions ensure still, dry air above 50 degree F temperature, and humidity above manufacturer's printed recommended level. Do not apply paints to surfaces in direct sunlight. Conform to manufacturer's printed instructions for safety requirements.

2. Coordinate cleaning and painting operations to eliminate contamination of one by the other.

3. Maintain coating materials at manufacturer's recommended mixing and application temperatures for not less than 24 hours before use. Have clean containers, spray equipment, applicators and accessory items ready for use before decanting or mixing paint materials.

4. Coordinate materials to be applied with previous coatings on affected surfaces. Obtain, in all cases, manufacturer's written directions, and follow them strictly, except where otherwise specified.

5. Coordinate preparation and material compatibility requirements with the Work specified in Section 09940, Shop Painting.

6. Before any paint application, clean existing and new surfaces to be coated of dust, dirt, grease, white rust, paint unsuitable for top coating, efflorescence, oil, moisture, foreign matter or similar conditions detrimental to coating bond and durability.

7. Following cleaning, apply preparatory treatment in strict accordance with manufacturer's written instructions.

8. Fill imperfections and holes in surfaces to be painted with material recommended by paint manufacturer.

B. Metals to Receive Paint Finishes:

1. Prepare ferrous metals, including field welds and unprimed shop welds, without shop prime coats as follows:

    a. Near White blast cleaned (SSPC-SP-10), for submerged components.

    b. Commercial blast cleaned (SSPC-SP-6), for non-submerged components.

    c. Use needle gun for field welds and shop welds which occur in narrow, unprimed areas in an otherwise shop primed surface, followed by SSPC-SP1-solvent wipe.

2. Clean previously shop primed ferrous metals in accordance with manufacturers printed recommendations prior to field painting.

3. Non-ferrous and galvanized metal surfaces scheduled for paint finish:

    a. Clean in accordance with manufacturers recommendations prior to field painting (SSPC-SP-1 including power washing).

    b. Brush blast all exterior and interior exposures above constant 35% relative humidity or treat with Oakite LTS or equal etching solution. Brush blasted galvanized metal surfaces to receive a uniform profile of .75-1.25 mils.

    c. For interior galvanized and non-ferrous metals not exposed to wet environments apply in accordance with manufacturers written instructions.

C. Provide higher degree of cleaning for acceptable equivalent paint products when paint manufacturer recommends in his printed surface preparation recommendations.

D. Delay painting of areas which will be damaged by heat from welding, until welding is complete. Reclean and recoat substrate as specified for original coats, when coated areas have been damaged by welding or have not been painted to allow welding.

3.04 TOUCH-UP:

A. Before applying field coat, touch-up abraided areas of shop coats with paint of the same type. Apply an entire coat to abraided area. Touch-up coats are in addition to, and not a substitute for first field coat. Clean deteriorated surfaces as specified herein and in accordance with manufacturer’s recommendations before applying touch-up coat.

3.05 APPLICATION:

A. Refer to Paint Schedule at end of this Specification section for coating requirements. Provide additional prime, undercoat, and finish coats as specified, indicated, and recommended by coating manufacturer's printed instructions.

B. Conditions:

1. Do not apply paints or other finish to wet or damp surfaces, except in accordance with instructions of manufacturer. Do not apply exterior paint during cold, rainy, or frosty weather, or when temperature is likely to drop to freezing. Do not apply paints to surfaces in direct sunlight.

2. Paint surfaces which have been cleaned, pretreated, or otherwise prepared for painting with first field coat as soon as practicable after such preparation has been completed, but in any event prior to deterioration of prepared surface.

3. Coat blast cleaned metal surfaces in accordance with SSPC guidelines, before any rusting or other deterioration or contamination of the surface occurs. Do not coat blast cleaned surfaces later than 8 hours after cleaning.

C. Methods:

1. Spraying with apparatus may be substituted for brush application of paints in locations approved for spraying.

2. Prepare surfaces, mix and apply paint materials in strict accordance with manufacturer's printed instructions and recommendations. Control temperature of materials upon mixing and application, surface temperature and condition, thinning and modifying.

3. Protect surfaces to be coated, before, during and after application.

D. Workmanship:

1. Apply coating materials to meet manufacturer's spreading rate and dry film thickness recommendations. Dry film thicknesses specified are constant for brush, spray, roller or other form of application.

   a. Control thinning in accordance with V.O.C. regulations for spray use and to manufacturer's printed instructions, and produce specified dry film thickness on level surfaces, interior and exterior angles.

2. Apply paints and coatings using painters continuously employed in the painting profession for no less than 5 years, brushed or rolled out carefully to a smooth, even coating without runs or sags. Curing time in accordance with manufacturers printed instructions.

3. Finish surfaces: Uniform in finish and color, and free from flash spots and brush marks.

3.06 PROTECTION AND CLEAN-UP:

A. Protect existing and new surfaces to be painted or coated under this Section as follows:

1. Arrange for preparation and coating activities to be performed in areas and during times when no continuous traffic and no dust generating activity will be present.

2. During time between preparation and coating, protect work from dust and dirt with drop cloth. Do not allow contact with surfaces in this time period.

3. During painting activity, clearly mark the area being used by painters to prevent interference with painting being applied as specified.

4. After painting, clearly barricade painted surfaces with cones, plastic barrier tape, or other visible barrier. Locate "WET PAINT" signs near painted surfaces. Do not remove barriers and signs until paint surface dries throughout entire film thickness.

5. Pipe supports for Plumbing Work and HVAC Work shall be shop painted and touch-up only under Section 15400. All other pipe supports shall be shop painted and touch-up only under Section 09941.

6. Provide painting of steel water pipes in accordance as specified in Section 09 97 00 External Steel Pipe Coating Specification.

B. Remove or completely mask existing and new accessory items, finish hardware, lighting fixtures, escutcheon plates, trim and similar finish items not to be painted before painting adjacent surfaces. Carefully replace and reposition upon completion of adjacent painting and cleaning work.

C. Upon completion of the Work, clean up paint spots, oil, and stains from floors, glass, hardware, and similar finished items and remove tape.

3.07 PAINT SCHEDULE

A. Coordinate and schedule the various cleaning, touch-up and finishing operations. Transmit and coordinate the transmission of materials data, color selections and coating system methods between the coating applicators. Do not exceed exposure and recoat time limits.

PIPE IDENTIFICATION COLOR SCHEDULE
VALVES, PIPE, PUMPS, TANKS

Pipe System	Legend Symbol	Paint Color	Letters and Arrows	Stencil Text
Drain	D	Black	White	Drain
Service Water	W2	Dark blue	White	Service Water
Sump Pump Discharge	SPD	Black	White	Sump Pump Discharge

1. Legend symbols listed above in Pipe Identification schedule shall also be added in parenthesis to the end of all stencil text designations indicated.
2. Provide banding 4 ft. 0 in. on center for sludge lines not otherwise specified above. Provide in dark brown and stenciled.

PAINT SCHEDULE

Item No.	Surface or Item	Field Coats 1st	2nd	Final
1	Interior galvanized interior structural steel, interior miscellaneous ferrous metal-work, ferrous piping and piping supports, ferrous parts of operating devices, valve handles and supports.	PE	---	PE
2	Exterior structural steel, exterior galvanized structural steel, lintel angles, ferrous piping and piping supports, ferrous parts of operating devices and supports, guard posts.	ZR	PE	APE
3	Exposed electrical conduit, conduit fittings, and outlet boxes attached directly to painted walls and ceilings and all exposed-to-view conduit fittings and outlet boxes.	PE	---	PE
4	Items with factory finish.	Touch-up with materials supplied by manufacturer		
5	Interior shop painted ferrous metals, galvanized metals and equipment non-submerged and subject to splashing subject to potable water NSF61	PE	HSE	HSE

Notes:

1. If prime coat has been exposed for more than 6 months, Painting Subcontractor will provide test patches to insure adhesion of field-applied coatings. Test patches shall be applied in accordance with paint manufacturer's instructions.

2. Provide patching compound for existing and new concrete surfaces before beginning field painting, in accordance with Paint Manufacturer's recommendations.

3. Conform to paint manufacturer's written instructions with regard to surface preparation and compatibility of new paint coatings over existing paint coatings. Painting Subcontractor shall take samples of existing paint coatings and coordinate with paint manufacturer and identify the generic type existing. Final recommendations of the paint manufacturer shall be given to the Painting Subcontractor in writing for the proper generic type coating that can be applied to the existing surfaces. If the specified paint coating for existing surfaces is not acceptable by paint manufacturer, then the Painting Subcontractor shall provide the recommended coating and at no additional cost to Owner. Paint coating submitted shall have the performance criteria for the intended purpose of that existing item/surface with regard to corrosion-resistance, self-priming, and ease of application.

4. Pipe supports for Plumbing Work and HVAC Work shall be shop painted and touch-up only under Section 15400. All other pipe supports specified shall be shop painted and touch-up only under Section 09941.

3.08 FINAL TOUCH-UP:

A. Prior to final completion and acceptance, examine painted and finished surfaces and retouch or refinish areas to leave touched-up areas with same appearance as and even with the surrounding finish specified.

B. After doors have been fitted and hung, refinish edges, tops and bottoms.

3.09 TESTING:

A. Conduct field testing in the presence of Engineer for specified mil thickness in accordance with SSPC-PA-2.

B. Test results shall meet requirements of SSPC-PA-2. Failure of test results shall require that surfaces be repainted until approved results of testing have been obtained for the specified mil thickness.

3.10 CONTRACT CLOSEOUT:

A. Provide in accordance with Section 01700.

END OF SECTION

SECTION -09970

Welded Steel Pipe Coating Specification

PART 1 – GENERAL

1.01 Scope of Work

A. This section covers all workmanship, materials, supervision, and quality requirements for surface preparation and protective coating and lining application for the Exterior and Interior surfaces on Steel Water Pipes.

1. All Exterior and Interior Protective Coatings shall be of the highest quality and in compliance with ASTM D16 Type V and AWWA C222-08 Polyurethane Coatings for The Interior & Exterior of Steel Water Pipe & Fittings (Includes Addendum C222A-09)

2. Use coating systems specified in this section to finish all pipe components, unless otherwise indicated. Without restricting volume or generality, work to be performed under this section may include, but is not limited to:

a. Exterior and Interior steel
b. Hangers, and supports
c. Repair Materials

1.02 Definitions

A. Terminology used in this section is in accordance with definitions contained in ASTM D 16, ASTM D 3960, and the following definitions:

1. Abrasive: Material used for blast cleaning, such as sand, grit or shot.

2. Abrasive Blast Cleaning: Cleaning/surface preparation by abrasive propelled at high speed.

3. Anchor Pattern: Profile of prepared surface(s).

4. Coating/Lining Thickness: The total dry film thickness of primer, intermediate and/or finish coats.

5. Coating Consultant: Corrosion Probe, Inc. (CPI)

6. Dew point: Temperature of a given air/water vapor mixture at which condensation starts.

7. Drying Time: Time interval between application and curing of material.

8. Dry to Recoat: Time interval between application of material and ability to receive next coat.

9. Dry to Touch: Time interval between application of material and ability to touch lightly without damage.

10. Feather Edging: Reducing the thickness of the edge of paint.

11. Feathering: Operation of tapering off the edge of a point with a comparatively dry brush.
12. Field Coat: The application or the completion of application of the coating system after installation of the surface at the site of the work.
13. Filler/Surfacer: See Resurfacer/Resurfacing Material
14. Hold Point: A defined point at which work shall be halted for QC and/or QA related inspection.
15. Holiday: a discontinuity, skip, or void in coating or coating system film that results in low dielectric strength.
16. Hydro blast: A term meaning the same as high or ultra-high-pressure water jetting.
17. Incompatibility: Inability of a coating to perform well over another coating because of bleeding, poor bonding, or lifting of old coating; inability of a coating to perform well on a substrate.
18. Immersion: Refers to a service condition in which the substrate is below the waterline or submerged in water or wastewater at least intermittently if not constantly.
19. Inspection and Test Plan: A plan by the CONTRACTOR/CSA that incorporates all of the required QC testing into the CONTRACTOR/CSA's work plan for the project. The I&TP systematically lists the inspection hold points, test methods, and acceptance criteria for each procedure in each phase of the project Work.
20. Mil: 0.001 inch.
21. Overspray: Dry spray, particularly such paint that failed to strike the intended surface.
22. Pinhole: A small diameter discontinuity in a coating or coating system film that is typically created by outgassing of air from a void in a concrete substrate resulting in exposure of the substrate or a void between coats.
23. Pot Life: Time interval after mixing of components during which the coating can be satisfactorily applied.
24. Process Control Procedure: Documents one process, such as mobilization and setup, abrasive blasting, coating mixing, coating application, and curing, clean-up, etc. that together make up the work plan.
25. Quality Assurance: An audit process conducted to verify (after the fact) that the work performed meets the specifications and to validate the testing and measurements conducted through the QC program. QA incudes visual observation along with various physical tests and measurements (many of the same tests performed in the QC program) at defined hold points. QA shall be performed by the Owner's representative or Independent Quality Assurance Inspector retained by the Owner.

26. Quality Control: The program, designed and managed by the CONTRACTOR/CSA, to control the project execution parameters through visual observation, measurements, physical tests, policies, procedures, and training programs in order to produce a final product that complies with the project specifications. QC includes testing that identifies deficiencies while the work is progressing so that methods and techniques can be modified to meet the specification requirements.
27. Shelf Life: Maximum storage time for which a material may be stored without losing its usefulness.
28. Shop Coat: One or more coats applied in a shop or plant prior to shipment to the site of the work, where the field or finishing coat is applied.
29. Spreading Rate: Area covered by a unit volume of paint at a specific thickness.
30. Stripe Coat: A separate coat of paint applied to all weld seems, pits, nuts/bolts/washers, and edges by brush. This coat shall not be applied until any previous coat(s) have cured and, once applied, shall be allowed to cure prior to the application of the subsequent coat(s).
31. Tie Coat: An intermediate coat used to bond different types of paint coats. Coatings used to improve the adhesion of a succeeding coat.
32. Touch-Up Painting: The application of paint on areas of painted surfaces to repair marks, scratches, and areas where the coating has deteriorated to restore the coating film to an unbroken condition.
33. Ultrahigh-Pressure Water jetting (UHPWJ) – A method of surface preparation employing clean water as the media at or above 210 MPa (30,000 psi).
34. Weld Spatter: Beads of metal scattered near seam during welding.

B. The following abbreviations may be used herein:
    1. ANSI - American National Standards Institute
    2. AMPP- Association for Materials Protection and Performance (formerly NACE)
    3. AWWA – American Water Works Association
    4. CSM - Coating System Manufacturer. Refers to the acceptable coating system manufacturer.
    5. Contractor- The entity to which a contract is held to perform the work contained in this specification. If the contractor is going to self-perform the work within this specification, they are also then considered the CSA.
    6. CSA – Coating System Applicator. A generic reference to the specialty coating system applicator or subcontractors retained by the contractor to install the coating systems specified in this Section. If no specialty CSA is retained, the CSA may be the same entity as the Contractor.

7. CTR - Coating System Manufacturer's Technical Representative. Refers to the technical representative(s) of the acceptable Coating System Manufacturer and is abbreviated as CTR.
8. DFT - Dry Film Thickness. Thickness of cured film, usually expressed in mils (0.001 inch).
9. ITP – Inspection & Testing Plan
10. NACE - National Association of Corrosion Engineers (now AMPP)
11. PCP – Process Control Procedure
12. QA – Quality Assurance
13. QC – Quality Control
14. SSPC - The Society for Protective Coatings
15. TPC - Technical Practice Committee
16. VOC - Volatile Organic Compound. The portion of the coating that is a compound of carbon, is photochemically reactive, and evaporates during drying or curing, expressed in grams per liter (g/l) or pounds per gallon (lb./gal). VOC is determined by EPA Method 24.
17. WFT - Wet Film Thickness. The primer or coating film's thickness immediately following application. Wet film thickness is measured in mils or thousandths of an inch (0.001 inch) and is abbreviated WFT.

1.03 Reference Standards

A. This section contains references to the following documents. They are a part of this section as specified and modified. Where a referenced document contains references to other standards, those documents are included as references under this section as if referenced directly. In the event of conflict between the requirements of this section and those of the listed documents, the requirements of this section shall prevail.

B. Unless otherwise specified, references to documents shall mean the documents in effect at the time of Advertisement for Bids or Invitation to Bid (or on the effective date of the Agreement if there were no Bids). If referenced documents have been discontinued by the issuing organization, references to those documents shall mean the replacement documents issued or otherwise identified by that organization or, if there are no replacement documents, the last version of the document before it was discontinued. Where document dates are given in the following listing, references to those documents shall mean the specific document version associated with that date, regardless of whether the document has been superseded by a version with a later date, discontinued, or replaced.

REFERENCE STANDARDS	
Reference	**Title**
ASTM (American Society for Testing and Materials)	
ASTM D16	Standard Terminology for Paint, Related Coatings, Materials, and Applications
ASTM D2200 (SSPC-VIS1)	Pictorial Surface Preparation Standards for Painting Steel Surfaces
ASTM D2240	Standard Test Method for Durometer Hardness
ASTM D2369	Standard Test Method for Volatile Content of Coatings
ASTM D3960	Standard Practice for Determining Volatile Organic Compound (VOC) Content of Paints and Related Coatings
ASTM D4285	Standard Test Method for Indicating Oil or Water in Compressed Air
ASTM D4414	Standard Practice for Measurement of Wet Film Thickness by Notch Gages
ASTM D4417	Standard Test Methods for Field Measurement of Surface Profile of Blast Cleaned Steel
ASTM 4541	Standard Test Method for Pull-Off Strength of Coatings Using Portable Adhesion Testers
ASTM D4752	Standard Practice for Measuring MEK Resistance of Ethyl Silicate (Inorganic) Zinc-Rich Primers by Solvent Rub
ASTM D5162	Standard Practice for Discontinuity (Holiday) Testing of Nonconductive Protective Coating on Metallic Substrates
ASTM E337	Standard Test Method for Measuring Humidity with a Psychrometer
AWWA American Water Works Association	
AWWA C222	Polyurethane Coatings for The Interior & Exterior of Steel Water Pipe & Fittings
NACE (National Association of Corrosion Engineers)	
NACE Publication 6D-163	A Manual for Painter Safety
NACE Publication 6G-164 A	Surface Preparation Abrasives for Industrial Maintenance Painting
NACE Standards	January 1988 Edition of the National Association of Corrosion Engineers, TPC.
NACE SP0188	Standard Practice – Discontinuity (Holiday) Testing of New Protective Coatings on Conductive Substrates
NACE SP0288	Standard Recommended Practice, Inspection of Linings on Steel and Concrete
NACE Publication TPC2	Coatings and Linings for Immersion Service
NACE SP0178	Design, Fabrication, and Surface Finish Practices for Tanks and Vessels to Be Lined for Immersion Service.
SSPC (The Society for Protective Coatings)	
SSPC	Paint Application Specification No. 1.

REFERENCE STANDARDS	
Reference	**Title**
SSPC-AB 1	Mineral and Slag Abrasives
SSPC-AB 2	Specification for Cleanliness of Recycled Ferrous Metallic Abrasives
SSPC-AB 3	Newly Manufactured or Re-Manufactured Steel Abrasives
SSPC-PA 1	Shop, Field, and Maintenance Painting of Steel
SSPC-PA 2	Measurement of Dry Coating Thickness on Ferrous Metals Using Magnetic DFT Gauges
SSPC Guide 12	Guide for Illumination of Industrial Painting Project
SSPC-PA Guide 3	A Guide to Safety in Paint Application
SSPC Guide 6	Guide for Containing Surface Preparation Debris Generated During Paint Removal Operations
SSPC-PA Guide 10	Guide to Safety and Health Requirements for Industrial Painting Projects
SSPC-PA Guide 11	Stripe Coating Guideline
SSPC-PA Guide 15	Field Methods for Extraction and Analysis of Soluble Salts on Steel and Other Nonporous Substrates
SSPC SP1	Solvent Cleaning
SSPC SP2	Hand Tool Cleaning
SSPC SP3	Power Tool Cleaning
SSPC-SP5/NACE#1	White Metal Blast Cleaning
SSPC-SP6/NACE#3	Commercial Blast Cleaning
SSPC-SP7/NACE#4	Brush-Off Blast Cleaning
SSPC-SP10/NACE#2	Near-White Blast Cleaning
SSPC SP11	Power Tool Cleaning to Bare Metal
SSPC WJ 1-4/NACE WJ1-4	Surface Preparation and Cleaning of Steel and Other Hard Materials by High and Ultra-High-Pressure Water Jetting Prior to Recoating
SSPC-SP16	Brush-Off Blast Cleaning of Coated and Uncoated Galvanized Steels, Stainless Steels, and Non-Ferrous Metals
SSPC-TR2	Wet Abrasive Blast Cleaning
SSPC-TU-3	Overcoating Existing Coating Systems Applied to Steel Substrates
SSPC-TU-4	Field Methods for Retrieval and Analysis of Soluble Salts on Substrates.
SSPC-TU-7	Conducting Ambient Air, Soil, and Water Sampling of Surface Preparation and Paint Disturbance Activities
SSPC V1	Good Painting Practice: Painting Manual Volume 1
SSPC V2	Systems and Specifications: Steel Structures Painting Manual, Volume 2
SSPC-VIS 1	Visual Standard for Dry Abrasive Blast Cleaned Steel

REFERENCE STANDARDS	
Reference	**Title**
SSPC-VIS 3	Visual Standard for Power and Hand – Tool Cleaned Steel
SSPC-VIS 4	Visual Standards (Water-jetting)
SSPC-VIS 5	Visual Standards (Wet Abrasive Blast Cleaning)
NSF-61	Drinking Water System Components – Health Effects
ISO 8502-3	Assessment of Surface Cleanliness – Assessment of Dust on Steel Surfaces Prepared for Painting (Pressure-Sensitive Tape Method)
ISO 8502-6	Assessment of Surface Cleanliness – Extraction of Water Soluble Contaminants for Analysis (Bresle method)
ISO 8502-9	Assessment of Surface Cleanliness – Field Method for the Conductometric Determination of Water-Soluble Salts

1.04 Section Not Used

1.05 Quality Requirements

A. CONTRACTOR/CSA Qualifications:

1. The CONTRACTOR/CSA shall be an approved applicator of that system by the CSM. This shall be documented in writing by the CSM.

2. Employ only supervisory and lead applicator trades people who have at least 5 years of experience performing similar work in operating water treatment facilities to perform any of the surface preparation and installation work as specified herein.

3. The CONTRACTOR/CSA shall at all times have a competent superintendent or supervisor in charge who is thoroughly familiar with the work in progress. The superintendent or supervisor shall represent the CONTRACTOR/CSA and shall have authority to receive and respond to all questions and non-conformance issues raised by the Consultant/Engineer.

4. The CONTRACTOR/CSA shall be a firm with at least five (5) years of experience properly preparing and applying protective linings and coatings on potable water pipes of similar size and scope. This experience requirement shall be documented with at least five (5) verifiable project references going back no more than 5 years with contact name, telephone numbers, and email addresses.

5. All of the CONTRACTOR/CSA's application crew to be assigned to the work covered by this Section shall be trained in the proper, hands-on application of the specified materials including all repair materials, interior linings, and exterior coatings, by the CSM. This training to be performed off-site at the CONTRACTOR/CSA's shop facilities or elsewhere shall ensure that the same application tools, equipment, and methods to be used on the Work are used by the CONTRACTOR/CSA's application personnel during the training exercise. All application crew personnel shall have mixed and applied the specified materials during the training. This training shall be documented in writing by the CSM and

the CONTRACTOR/CSA in letters stating the employees' names, the dates of the training, the products applied, and certifying that all listed personnel received the training. All employees' signatures shall also be provided in these letters from both the CSM and the CONTRACTOR/CSA. This can be done as a joint letter. The training provided shall be given by technical service personnel from the CSM experienced in the application of all of the specified materials. This training shall not be given by regional or national sales or marketing personnel from the CSM or its agents. This training shall consist of a minimum of 8 hours of hands-on/classroom training.

6. Plural application equipment shall be operated by someone fully trained in the operation of the specific plural component equipment being used in the application. The individual shall have a PLURAL Level 1 or 2 certificate with a minimum of 3 years' operating experience with plural component pumps.

B. Standardization:

1. Materials and supplies provided shall be the standard products of CSMs. Materials in each coating system shall be the products of a single CSM.

2. The standard products of CSMs other than those specified may be acceptable when it is demonstrated to the Engineer that they are equal in composition, durability, usefulness, and convenience for the purpose intended. Requests for consideration of CSMs other than those specified in this Section will be considered, provided the following minimum conditions are met. Such requests are not a substitution for submittals after the alternative CSMs have been considered and accepted.

   a. The proposed coating system shall use an equal or greater number of separate coats to achieve the required total dry film thickness.

   b. The proposed coating system (all materials including repair and filling materials and coating/lining materials) shall be of the same generic type as that specified including curing agent for two component materials. However, if the proposed alternate coating provides similar performance for the expected service conditions specified herein for the standard coating system, please provide a written explanation of its generic type (including curing agent or type) and provide performance data which compares it to the specified products.

   c. The CSM shall provide a list of at least three (3) references for the proposed product where the coating of the same generic type or performance capabilities has been applied and has performed successfully for over 5 years in similar service conditions. The reference list shall include the project name, city, state, owner, phone number of owner; coating system reference and number; type of facility in which it was used, generic type, and year coating was applied.

C. Minimum CONTRACTOR/CSA Quality Control (QC) Requirements

1. The CONTRACTOR/CSA shall be solely responsible for the workmanship and quality of the coating system installation. All cleaning and coating/lining shall be done using current "Best Industrial Painting Practices" as per SSPC Good Painting Practices Vol 1 5th Edition. Minimum and maximum recoat windows, cure times, mixing, storage and recommended application procedures and other important requirements of the coating/lining manufacturer shall be strictly adhered to by the CONTRACTOR/CSA.

2. Inspections by the Engineer, Coating Consultant or the CTR will not relieve or limit the Contractor's responsibilities.

3. The CONTRACTOR/CSA shall prepare an Inspection and Test Plan (I&TP) that complies with this Section for all aspects of the resurfacing and coating/lining application.

4. A pre-job meeting shall be conducted with the CONTRACTOR/CSA and CONTRACTOR/CSA to review the quality program I&TP and the production schedule. Coating Inspection requirements shall be based on NACE SP0288.

5. The CONTRACTOR/CSA shall at all times have a competent superintendent or supervisor in charge who is thoroughly familiar with the work in progress. The superintendent or supervisor shall represent the CONTRACTOR/CSA and shall have authority to receive and respond to all questions and non-conformance issues raised by the Engineer and the Owner.

6. The CONTRACTOR/CSA shall at all times have trained and certified quality control inspectors performing quality control procedures. All persons performing quality control duties shall be NACE/SSPC/AMPP certified. Level 1 (Basic) with a minimum of 3 years' experience in quality control processes is acceptable, providing they are under the direct supervision of a NACE/SSPC/AMPP Level 2 (Certified) or NACE/SSPC/AMPP Level 3 (Senior) in good standing.

7. The CONTRACTOR/CSA's methods shall conform to requirements of this specification and the standards referenced in this specification. Changes in the coating system installation requirements will be allowed only with the written acceptance of the Engineer before work commences.

8. Contaminated, outdated, diluted materials, and/or materials from previously opened containers shall not be used.

9. The CONTRACTOR/CSA shall provide all points of access for inspection by the Owner's Inspector. The CONTRACTOR/CSA shall provide ventilation, ingress and egress, and other means necessary for the Owner's Inspector personnel to access safely the work areas.

10. The CONTRACTOR/CSA shall conduct the work so that the coating system is installed as specified and shall inspect the work continually to ensure that the coating system is installed as specified. Coating system work that does not conform to the specifications or is otherwise not acceptable shall be corrected as specified or as required in writing by the CSM at no additional cost to the Owner.

11. The CONTRACTOR/CSA shall prepare Process Control Procedures (PCP) for all processes to be utilized on this project and combine these into a coherent Work Plan which describes in detail the CONTRACTOR/CSAs schedule and plan to effectively execute these specifications and complete the Work.

12. The CONTRACTOR/CSA shall provide written daily QC reports that present, in summary form, test data, work progress, surfaces covered, ambient conditions, quality control inspection test findings, and other information pertinent to the coating system installation. The CONTRACTOR/CSA's QC manager shall certify the Work is in compliance with these specifications. QC reports for each day of Work shall be available for review by the Owner or any representative of the Owner on the following day.

13. The CONTRACTOR/CSA shall provide all the necessary environmental control required to complete the work and maintain the required environmental conditions (including air temperature and humidity) including, but not limited to, shelters, enclosures, dehumidification equipment, fans, heating equipment, and fuels for all equipment at no additional cost to the Owner.

1.06 Minimum QC Inspection Requirements (Acceptance Criteria in 4.0 of this specification):

A. As part of its overall Quality Control program, the CONTRACTOR/CSA shall conduct Quality Control inspections during the surface preparation, surface repair, coating system installation, final testing and record the results from those inspections. These daily inspection reports shall be provided to the Owner on a daily basis (QC reports must be available for review the following day after inspection). The CONTRACTOR/CSA shall coordinate such inspections with the Owner's inspector such that the Owner's inspector may observe CONTRACTOR/CSA's inspections or conduct separate independent Quality Assurance inspections at specific hold points on a scheduled basis. Failure to notify the owner's representative and allow sufficient time for the Quality Assurance Inspector to perform Hold Point Inspections could result in any of the work completed to be rejected and re-done at the expense of the CONTRACTOR/CSA. The minimum QC Hold Points shall be as follows:

    1. Inspect all materials upon receipt to ensure that all are supplied by the approved manufacturer.

    2. Provide specified storage conditions for all materials, solvents, and abrasives.

    3. After initial surface preparation to review substrate condition.

4. After correction of any surface defects including pit filling or welding repairs
5. After abrasive blasting
6. After Stripe Coating
7. After Intermediate Coat application (exterior only)
8. After Finish coat application
9. Holiday testing
10. After any and all repair procedures
11. Final Inspection

B. The CONTRACTOR/CSA shall prepare 2 steel coupons of similar carbon steel material as the structure. All coupons shall be prepared using the same abrasive blasting equipment and blast media that will be used for preparation of the pipe. The surface cleanliness and surface profile shall meet the minimum allowable value of this specification and the CSM product data sheets for each individual system (interior lining, exterior coating). One coupon will be prepared for the coating system by abrasive blasting to SSPC SP10/NACE #2 Near White Blast Cleaning with a minimum jagged surface profile of 3 mils. One coupon shall be left uncoated and stored in a way to prevent severe rusting of the coupons. The uncoated coupons shall be used by both the Quality Control and Quality Assurance inspectors to verify their Type II Dry Film Thickness gages prior to each use to ensure consistency of the collected data. One fully prepared coupon will be coated with the pipe coating Polyurethane system at the specified DFT.

C. Conduct adhesion testing in accordance with ASTM D4541 in 2 locations on the coupon with the applied pipe coating systems. The results/values of adhesion testing shall be approved in writing as acceptable by the CTR. The minimum acceptable value shall be 1500 psi. The CONTRACTOR/CSA shall be responsible for repairing and relining areas where adhesion testing is performed. Any area that does not meet the adhesion requirements of the CTR and owner's representative shall require removal and replacement by the CONTRACTOR/CSA at no additional cost to the owner.

D. Conditions Prior to Surface Preparation - Prior to coating application all surfaces shall be inspected by the CONTRACTOR/CSA and any issues or conditions that would prevent compliance with this specification shall be brought to the immediate attention of the Owner in writing.

E. Paper blotter test in accordance with ASTM D 4285 shall be performed by the CONTRACTOR/CSA on each air compressor being used at the beginning of each workday and again once for every 4 hours worked to determine if the air is sufficiently free of oil to not produce detrimental effects on coating system adhesion.

F. Post Surface Preparation Metallic Surfaces – Following initial blast cleaning, test for the presence of soluble salts as per section 3.06 and 3.07 of this specification, using the retrieval and analysis method designated as Method 4.2.2, Adhesively Bonded Latex Patch or Cell as described in SSPC-TG 15 (2013). Testing shall be in accordance with ISO 8502-6/8502-9.

G. Post Surface Preparation Metallic Surfaces – Following initial blast cleaning, measure the surface profile of the prepared surface in accordance with ASTM D4417 Methods A or C.

H. Post Surface Preparation Metallic Surfaces – Upon completion of the surface preparation, the CONTRACTOR/CSA shall inspect for proper degree of surface cleanliness as specified in this Section and in the CSM's written instructions. Degree of surface preparation shall be in accordance with ASTM D2200 using SSPC V1 visual standards.

I. Environment and Site Conditions - Prior to commencing an activity associated with final surface preparation and coating and lining system installation, the CONTRACTOR/CSA shall measure, record, and confirm acceptability of ambient air temperature, substrate surface temperature and relative humidity as well as other conditions such as proper protective measures for surfaces not to be coated at a minimum of once prior to the start of surface preparation and coating and lining application, and thereafter every two hours during all surface preparation and coating and lining applications. Perform relative humidity measurements in accordance with ASTM E337. The acceptability of the weather and/or environmental conditions shall be determined by the requirements specified by the CSM of the coating system being used. The steel surface shall be a minimum of 5°F above the dew point temperature at all times during final surface preparation, coating/lining application and curing of the internal lining.

J. The CONTRACTOR/CSA shall provide constant environmental monitoring equipment (Data Loggers) 24 hours a day during all final surface preparation, priming, coating/lining application and curing times. The CONTRACTOR/CSA is responsible for continuous monitoring of environmental conditions to ensure no flash rusting of the final blast occurs and the conditions for the application of priming and coating/lining application and curing meets the demands of the CSM products being installed.

K. Provide correct mixing of all materials in accordance with the manufacturer instructions.

L. Monitoring of Coatings Application – The CONTRACTOR/CSA shall inspect, measure, and record the wet film thickness and general film quality (visual inspection) for lack of runs, sags, pinholes, holidays, etc. as the application work proceeds. Perform WFT measurements in accordance with ASTM D4414 at a minimum rate of one measurement for every 10 SF coated.

M. Post Application Inspection – The CONTRACTOR/CSA shall identify defects in application work including pinholes, holidays, excessive runs or sags, inadequate or excessive film thickness and other problems as may be observed.

N. Verify curing of the coating in accordance with the manufacturer's instructions and as per ASTM D2240.

O. Post Cure Evaluation – Upon completion of the coating/lining system installation, surfaces shall be cleaned and prepared to permit close visual inspection by the Consultant/Engineer at any given location. Any and all deficiencies or defective work (not in compliance with this section or related sections) will be marked for repair or removal/replacement by the CONTRACTOR/CSA at no additional cost to the Owner.

P. Following cure, coatings and linings shall be measured for dry film thickness by the CONTRACTOR/CSA. The DFT shall be measured:

Q. For carbon steel surfaces, this shall be performed in accordance with SSPC-PA 2 Level 3.

R. Any coating found to be below the specified DFT shall receive additional applications of the coating or lining or shall be removed or reapplied as required to meet the total DFT requirements specified in this Section at no additional cost to the Owner.

S. Conduct high voltage holiday detection over 100% of coated surfaces in accordance with ASTM D5162/NACE SP0188 and follow the CSM's recommendations for appropriate voltage settings.

T. Follow-up to corrective actions and Final Inspection. The CONTRACTOR/CSA shall measure and re-inspect corrective coating work performed to repair defects identified at prior Hold Points. This activity also includes final visual inspection along with follow-up tests such as holiday detection, adhesion tests, and DFT surveys.

1.07 Submittals

A. Submit the following in accordance with Division 01:

1. A detailed work plan, which shall incorporate the Inspection & Test Plan, including scope of work, methods of staging, equipment, and methods to be used for cleaning and coating application for each surface, contingencies and a bar chart schedule which shall include at a minimum:
   a. Mobilization
   b. Removal/relocating/protection of mechanical equipment
   c. Erection of staging/scaffolding
   d. Protection
   e. Containment
   f. Surface preparation
   g. Lining and coating application
   h. Testing
   i. Clean-up
   j. De-mobilization

2. Manufacturer's current printed recommendations and product data sheets for all products including performance criteria, surface preparation and application requirements, volatile organic compound (VOC) data, and safety requirements.

3. Safety Data Sheets (SDS) for any materials brought on-site including all coating materials, solvents, abrasive blast media or any other materials intended to be used for the work specified.

4. Storage requirements including temperature, humidity, and ventilation for all materials to be used for the specified work.

5. Applicators' certification that materials comply with federal, state, and local regulations for VOC (Volatile Organic Compounds).

6. Letter(s) certifying that surfaces to be treated have been prepared in accordance with manufacturer's printed instructions and are ready for installation work, citing location thereof. Marked-up drawings that show location of all Work will be submitted. Reference drawings provided in the bid package can be used.

7. Letter signed by CSM certifying that submitted products are suitable for application on the surfaces to be treated and for the service conditions.

8. Certification that the entity installing the coating/lining system is an approved applicator of the CSM for the specified repair products, resurfacing products and coating system.

9. Submit documentation evidencing work experience of project superintendent, supervisors, quality control, abrasive blasters, and coating/lining applicators.

10. Letter(s) certifying that all of the CONTRACTOR/CSA's application personnel received hands-on training by the CSM in accordance with 1.05 A. 5. Of this specification.

11. Submit written letter of approval from CSM, product data sheets, and material safety data sheets for all products to be used on this project.

12. The CONTRACTOR/CSA shall provide the Owner with a Safe Work Plan at least five (5) Business Days prior to the commencement of any Work on the Site.

1.08 Delivery, Storage and Handling

A. Materials shall be stored in enclosed structures and shall be protected from weather and excessive heat or cold in accordance with the CSM instructions. Flammable materials shall be stored in accordance with State and Local codes. Materials exceeding storage life recommended by the manufacturer shall be removed from the site. Cold storage or heated storage to be provided by the CONTRACTOR/CSA if required to ensure proper storage of the materials as per CSM technical data sheets.

B. Store all materials only in areas designated by the Owner solely for this purpose. Confine mixing, associated operations, clean up and storage of materials and related debris to authorized areas. All materials are to be stored on pallets or similar storage/handling skids off the ground in sheltered areas in which the storage temperature is maintained in accordance with the CSM recommendations.

C. Mix all materials in various areas as needed to complete the work. These enclosed areas must protect the mixing operation and materials from direct sunlight, inclement

weather, freezing, or other means of damage or contamination. Protect all other concrete and metallic surfaces and finishes from any spillage of material(s) within the mixing area. Protect the ground from splash or spillage of all materials using plastic, drop cloths and other appropriate materials.

D. Do not use any process drains or storm drains within the grounds of the facility for disposal of waste or materials.

E. The CONTRACTOR/CSA shall take all precautions and implement all measures necessary to avert potential hazards associated with all materials as described on the pertinent Safety Data Sheets and container labels.

F. All abrasive media shall conform to SSPC AB1 standards and shall be stored on pallets to protect the abrasive from moisture. Abrasives shall be virgin mineral or slag materials. Abrasive media will be stored in covered areas to protect the material from inclement weather.

G. Manufacturers most current up to date SDS information for each product used on site shall be posted on the job site. This includes all coating, lining, solvents, chemicals, cleaning and disinfecting solutions, sealants, welding and repair materials and any other products being used on site by the CONTRACTOR/CSA.

H. Deliver all materials to the job site in their original, unopened containers. Each container shall bear the manufacturer's name and label.

1. Labels on all material containers must show the following information:
    a. Name or title of product.
    b. Federal specification number if applicable.
    c. Manufacturer's batch number and date of manufacture.
    d. Manufacturer's name.
    e. Generic type of material.
    f. Application and mixing instructions.
    g. Hazardous material identification label.
    h. Shelf-life date.
    i. Storage requirements.

2. All containers shall be clearly marked indicating any personnel safety hazards associated with the use of or exposure to the materials.

3. All materials shall be handled and stored to prevent damage or loss of label.

1.09 Coordination of Work

A. Work Areas:

1. The work areas on the job site will be designated by the Owner. The Contractor's personnel shall not be permitted in any area other than those expressly designated by the Owner.

B. Use of Facilities:

1. The Owner will make available a hydrant from which the CONTRACTOR/CSA may obtain potable water. The hydrant may be metered, and the CONTRACTOR/CSA will be required to pay for the volume of water used.

1.10 Safety

A. Provide in accordance with the requirements of the owner and the requirements included herein.

B. General - Personnel safety is the responsibility of the CONTRACTOR/CSA. The CONTRACTOR/CSA is responsible for assuring compliance with all applicable federal, state, and local safety requirements and the CONTRACTOR/CSA's own approved Safe Work Plan.

C. Safety Analysis Forms and Meetings: The CONTRACTOR/CSA shall thoroughly review all phases of the project and complete and submit a "Job Safety Analysis" and "Construction Safety Checklist" prior to mobilizing to the site. The CONTRACTOR/CSA shall update all safety documents in a timely manner as the project moves through the various phases, or if there is any new staff or change of personnel on site. Once the site work begins, the CONTRACTOR/CSA's Safety Officer/Supervisor/or other Competent Person shall complete a "Daily Site Safety Report" and a submit to the owner or owner's representative each day. The CONTRACTOR/CSA shall hold daily safety meetings to discuss specific operations or events scheduled for the day. This shall be recorded each day, with a list of the attendees and signatures of attendees.

D. The Contractor's work forces should comply with any and all applicable federal, State, and local regulations and the provisions outlined in the following documents:

1. SSPC-PA 10 - "Guide to Safety and Health Requirements for Industrial Painting Projects"
2. NACE Publication - "A Manual for Painter Safety"

E. The CONTRACTOR/CSA shall provide personnel with all safety equipment necessary to protect them during any phase of the work. This shall include, but not be limited to safety glasses, face shields, fresh air breathing hoods, goggles, earplugs, hard hats, steel toed work shoes, appropriate protective clothing, gloves, and plant approved respirators where required.

F. Keep any flammable materials such as solvents, thinners, coating, or sealant materials away from open flames, sparks, or temperatures higher than 38°C (100°F). Drums containing flammable materials will be properly grounded at all times. Only small quantities of solvents for smoothing the lining will be allowed inside containment enclosures or permitted confined spaces during installation work.

G. Power tools are to be in good working order to avoid open sparking. All electrical tools used on this project will be equipped with ground fault interrupters (GFIs).

H. The CONTRACTOR/CSA shall fireproof all work areas by maintaining a clean work area and having Underwriter's Laboratories approved fire extinguishers on-hand. The CONTRACTOR/CSA shall furnish these fire extinguishers.

I. Workers doing abrasive blasting or water jetting operations shall wear a fresh air supplied protective helmet and hood and personal protective clothing acceptable to industry standards and all government regulations.

J. Dispose of rags used for wiping up coating materials, solvents, and thinners by drenching them with water and placing in a metal container with a tight-fitting metal cover. Complete this disposal process at the end of each day. Remove these materials from the plant site at the end of every shift. Final disposal of these materials is the Contractor's responsibility.

K. Matches, flames, or sparks resulting from any source including welding, must be remote from the work area during coating work. Smoking is only permitted in areas designated by the Owner.

1.11 Jobsite Conditions

A. General Conditions- The jobsite is potentially an operating facility that will continue to operate prior to and during the work specified herein. No work performed by the CONTRACTOR/CSA shall interrupt facility operations without written approval from the owner or the owner's representative.

B. Subcontracting- Subcontracting for surface preparation and coating and lining applications is NOT allowed without the written approval from the owner or the owner's representative.

C. Environmental Conditions- The CONTRACTOR/CSA shall adhere to all environmental requirements of the CSM materials at all times. During final surface preparation, application of polymer fillers coating and lining application the steel surface shall be maintained at 5° F above the dew point and stabilized or improving at all times. Relative humidity shall not exceed 85% during final surface preparation, application of polymer fillers coating and lining application. Exterior coatings shall not be applied if inclement weather is imminent. The exterior coatings shall only be applied if there is sufficient cure time for early moisture resistance as per the CSM's instructions in the event of inclement weather. All surfaces shall meet the minimum low threshold temperature of the coating or lining materials as published by the CSM during all coating application and curing processes.

D. Wind- Wind direction and velocity shall be monitored at all times during exterior coating application to ensure no effect on the application and cure and to protect from overspray.

E. Containing Debris and Particulate- The CONTRACTOR/CSA shall take all precautions to ensure all dust, overspray, coating spatter, abrasive media debris or other materials and emissions do not escape the containment.

1. The containment system shall conform to the requirements of Class 2, C1 System as per SSPC Guide 6-2021 Guide Section 4.2.2.2 for Containing Debris Generated During Paint Removal Operations. The scaffold frame for the containment system shall be rigid in nature.

2. The CONTRACTOR/CSA is responsible for protecting the ground surrounding the structure from emissions and debris from the surface preparation and coating and lining applications. The CONTRACTOR/CSA shall protect the area surrounding the pipe using impermeable tarps or other methods ensuring the surrounding area is fully protected.

1.12 Warranty

A. Contractor's Warranty:

1. For a period of three (3) years from the date of beneficial use of the pipe the CONTRACTOR/CSA warrants to the Owner that the surface preparation, coating, and lining installation work provided under this specification section conforms to these specifications and is free from defects in materials and workmanship. The date of beneficial use shall be concurrent with the date of the final inspection indicated in 3.12 of this Section, provided the requirements of said Section have been accomplished by the Contractor. The CONTRACTOR/CSA shall repair or replace, at the sole option of and at no cost to the Owner, any work found to be defective within said warranty period. Such repair or replacement shall include the cost of removal and reinstallation.

2. The quality of both materials and workmanship for the installed coating and lining system work shall be the sole responsibility of the Contractor. It is hereby warranted that should these installed materials delaminate, disbond, crack cohesively, blister, or otherwise fail due to improper surface preparation, improper mixing or application, or lack of proper cure of the materials due to inadequate control of substrate or ambient conditions within the structures by the CONTRACTOR/CSA or due to a lack of quality of the materials provided by the Coating System Manufacturer, the CONTRACTOR/CSA shall be solely responsible for performing and or paying for the repair or replacement work required by the Owner to remedy the failed materials and workmanship to meet the original requirements of this Section and all contract drawings at no cost to the Owner and at the Owner's convenience. This warranty further stipulates that any incompatibility with or error in formulation or manufacturing of the restoration or coating/lining materials installed which results in an installed restoration or coating/lining material failure be and remain a financial matter strictly between the CONTRACTOR/CSA and the CSM. The financial responsibility and accountability for such a material related failure would remain solely with the CONTRACTOR/CSA with respect to this warranty made to the Owner.

3. The CONTRACTOR/CSA guaranties to replace or repair defective work for which he is accountable in an expeditious manner at the Owner's convenience and at no cost to the Owner. Any failure of the installed coating or lining materials which results from mechanical or physical damage from maintenance or process work performed by the owner or others, or other conditions which are not considered normal to the facility operation will not be the Contractor's responsibility for repair or replacement under this warranty to the Owner.

B. Coating System Manufacturer's Warranty:

1. The CONTRACTOR/CSA shall obtain from the manufacturer its warranty that the repair, coating, and lining products provided will be free from defects in formulated or manufactured material quality which could cause the installed work to fail. Said warranty, containing no exclusions or limitations, shall be in a form acceptable to, and for the benefit of the Owner, and shall be submitted by the CONTRACTOR/CSA as a condition of final payment. The Coating System Manufacturer's Warranty shall be provided on the CSM's letterhead and shall be signed and dated by a company officer of the CSM.

PART 2 PRODUCT

2.01 Approved Manufacturers

A. The following Coating System Manufacturers (CSM) are approved for this project:

1. Chemline
2. Lifelast
3. Sherwin Williams
4. Or Equal

2.02 Materials

A. All coating materials contained within shall consist of an ASTM D16 Type V, 100% solids, two component, rigid polyurethane material using methylene bisphenol diisocyanate (MDI) resin with a polyether and/or polyester polyol resin.

B. The polyurethane shall be formulated to have a percentage (%) solid of 99% or greater and a Volatile Organic Compound (VOC) level of less than 6 grams per litre (0.05 pounds per gallon) according to ASTM D2369.

C. The polyurethane materials shall have a mix ratio of 1 part MDI to 1 part polyol. Products with mix ratios other than 1:1 shall not be used.

D. Before mixing, the viscosity of the two individual "A" and "B" components shall be less than 2000 metric centipois at 70°F(21°C) and shall be balanced within 10% of each other. Products with unbalanced viscosities shall not be used.

E. The temperature range at which the linings/coatings can be applied shall be between -40°F (-40°C) and 140°F (60°C). The cure time for the external coatings before they can be handled shall be less than 20 minutes at 70°F (2°C). The cure time to immersion service readiness for the internal linings shall be 48 hours at 70°F (21°C).

The external pipe coating handling time can be reduced when applied to warm (120°F or 50°C) pipe. Recoat windows at different temperature will vary.

F. The linings/coatings shall be able to achieve unlimited thickness build in one coat using a multi-pass spray technique.

G. No primers are to be required by the polyurethane coating to achieve proper performance.

H. The linings/coatings shall contain no more than 25% non-reactive ingredients such as pigments, fillers, or extenders. The linings/coatings shall not contain any coal tar.

I. The linings/coatings shall contain no amines, coal tar, styrene, isocyanate monomer or flammable liquids.

J. Lining material shall be NSF 61 compliant.

2.03 Approved Materials

A. 100% Solids Polyurethane External Pipe Coatings and Interior Lining

1. Chemline- Chemthane 2265
2. LifeLast- DuraShield 210
3. Sherwin-Williams- Corropipe 3000 or Poly-Cote 110

B. Abrasive Blast Media

Abrasive blast media shall meet SSPC AB1 Mineral Slag Abrasives and must meet Class A Standards for silica content (crystalline silica content less than 1% by weight before blasting)

1. The CONTRACTOR/CSA shall utilize blast media free of all chlorides or other materials which may contaminate or become imbedded in the profile of the steel substrate.

2. The blast media shall be of a size and shape capable of producing the specified surface profile for the specific application.

3. Blast media used for surface preparation for coating shall be of the size and shape to produce a minimum 3.0 mils surface profile of a jagged nature.

4. Blast media shall be single use. No recycling of blast media will be permitted on this project.

C. Repair Materials

1. All repair materials shall be as follows:

   a. The same generic composition as the pipe coating.

   b. Repair materials shall be from the same manufacturer as the pipe coating material and come in containers with labels carrying the manufacturer's logo or name.

   c. Repair materials shall be supplied in pre-packaged measured kits or 2 component side by side tubes.

   d. Repair materials shall be delivered in the same color as the pipe coating.

PART 3- EXECUTION

3.01 General Requirements

A. As the initial step, degrease all surfaces to be treated as per SSPC SP-1 Solvent Cleaning using a water-based, emulsifying, biodegradable, non-flammable, phosphate-free cleaning solution, followed by rinsing with clean, potable water until all traces of contaminants including detergent have been removed. Rinse surfaces multiple times with high-pressure water per SSPC-WJ4/NACE WJ4 – High-Pressure Water Cleaning (HP WC), using a minimum pressure of 5,000 psi and a minimum volume of 6 gallons per minute. Use only potable water. All traces of degreasing and cleaning solutions shall be completely removed.

B. CONTRACTOR/CSA shall examine the areas and conditions under which the protective Coating Work is to be performed in accordance with NACE SP0178 and notify Owner in writing of conditions unfavorable to the proper and timely completion of the Work and/or compliance with these Specifications. It is the responsibility of the CONTRACTOR/CSA to inspect and report unacceptable surface conditions to the Owner prior to the commencement of surface preparation activities. Unacceptable surface conditions are defined as the presence of deteriorated substrates with deep depressions or other substrate conditions not acceptable for quality coating or lining material application.

C. Commencement of the Work of this Section shall indicate that the substrate and other conditions of installation are acceptable to the CONTRACTOR/CSA and his CONTRACTOR/CSA and will produce a finished product meeting the requirements of the Specifications. All defects resulting from accepted conditions shall be corrected by CONTRACTOR/CSA at his own expense.

3.02 Environmental

A. Comply with CSM's recommendations regarding ambient environmental conditions under which the specified materials may be applied and cured.

B. CONTRACTOR/CSA is responsible for all environmental controls necessary to maintain the CSM's recommended environmental conditions throughout the duration of the project. These controls include but are not limited to enclosure, heating with indirect fired heaters, dehumidification, etc.

C. Do not apply materials when dust is being generated.

3.03 Enclosures

A. 1.Provide the following per SSPC-Guide 6 based on surface preparation method:

B. 2.Class 2, C1 System as per SSPC Guide 6-2021 Guide Section 4.2.2.2 for Containing Debris Generated During Paint Removal Operations.

1. Class 2, C1 Containment- Type J1 Ventilation, **5.5.1** Method A–Visible Emissions: See SSPC-TU 7, Section 8.

3.04 Thinners and Solvents

A. No thinning of the material is allowed.

3.05 Control of Ambient Conditions

A. It shall be the Contractor's responsibility to control ambient conditions within the coating area via protective enclosures, heating/ventilation and/or dehumidification apparatus during surface preparation, application, and curing, to meet the specified conditions or conditions recommended by the CSM for application and curing of the specified materials.

B. The minimum ambient condition requirements for application work shall be in strict accordance with CSM's written recommendations.

C. The substrate temperature shall be a minimum of 5-degrees F above the dew point and stabilizing during all final surface preparation and coating applications.

D. The CONTRACTOR/CSA shall provide all means necessary to exhaust harmful gases/fumes, dust, and odors during execution of the work specified herein. No dust generation shall be allowed during coating or lining material application.

3.06 General Surface Preparation

A. Surface Preparation Requirements

1. All specified surface preparation shall be performed in accordance with the latest version of the SSPC/ NACE standards. Employ methods as specified herein to ensure that the degree of cleanliness and surface profile for all substrates, as specified herein, are attained.

2. Pressure-wash all surfaces to receive lining and coatings prior to abrasive blasting.
3. Pipe surfaces shall be abrasive blast cleaned with angular media (sand, aluminum oxide, garnet, or steel grit.) Reference SSPC Abrasive Specifications SSPC AB-1 *Mineral and Slag Abrasives* and SSPC-AB3 *Ferrous Metal Abrasives* DO NOT USE steel shot or other non-angular products or slag-based media. The abrasive shall be clean, dry, and free from contaminants. The grit size shall be in the range G25 to G40. The surface profile shall be a minimum 3.0 mils (75 microns) profile for full immersion service, buried service or atmospheric.
4. Greater angularity and profile depth may be required at the specifier's discretion but is not to exceed 4.5mils (115 microns).
5. Perform field quality control inspection and testing as specified in 1.05 and 1.06 of this Section. Testing acceptance criteria provided in Section 4 of this specification.
6. If, between final surface preparation work and lining and coating system application, contamination of the prepared and cleaned substrates occurs, or if the prepared substrates' appearances darken or change color, re-cleaning shall be required until the specified degree of cleanliness is reclaimed.
7. The compressed air used for blast cleaning will be filtered free of oil and moisture. Traps will be cleaned at least once every two hours or more frequently as is appropriate. Test compressed air as per ASTM D4285 Blotter test once every 4 hours to ensure air cleanliness.
8. Oil separators shall be installed just downstream of compressor discharge valves and at the discharge of the blast pot discharges. Oil separators shall be cleaned at least once every four hours or more frequently as is appropriate.
9. The abrasive blast nozzles used shall be the venturi or other high velocity type supplied with a minimum of 100 psi air pressure and suitable volume to obtain the required blast cleaning production rates and specified degrees of cleanliness.
10. The CONTRACTOR/CSA is responsible for dust control and for protection of mechanical, electrical, and all other equipment within, adjacent to and surrounding the work area as specified. The CONTRACTOR/CSA shall protect existing equipment and structures within the work area as specified.
11. Cleaning, surface preparation and material application shall be scheduled so that dust and spray from the cleaning process will not fall on wet, newly resurfaced, or coated substrates.
12. The CONTRACTOR/CSA shall be responsible for cleaning of only those surfaces to be resurfaced or coated or those surfaces on which his work has caused contamination.
13. Regulators, gauges, filters, and separators will be in good working order for all of the compressor air lines to blasting nozzles at all times during this work.

14. The quality, volume, and velocity of life support and ventilation air used during surface preparation shall be in accordance with applicable safety standards to ensure adequate air volume, and dissipation of airborne debris that would adversely affect the health of the public or personnel working for the Contractor, CONTRACTOR/CSA, Subcontractors, Owner, Coating Consultant, Engineer, or anyone who may be affected by on-site work activities.

15. The CONTRACTOR/CSA must provide adequate ventilation for airborne particulate evacuation and lighting (meeting all pertinent safety standards) to optimize visibility for both blast cleaning and inspection of the substrate during surface preparation work.

16. Soluble Salt Tests: Acceptable soluble salt tests shall include:

    a. Surface Swab/Titration Strip
    b. Latex Sleeve/Titration Strip
    c. Latex Cell/Titration Strip

Testing for Salts: Prior to blasting and prior to the prime coat, the surfaces shall be checked for the presence of soluble salts. Testing for the presence of soluble salts shall be done by the CONTRACTOR/CSA in the presence of the Owner's Quality Assurance inspector or owner's representative. The number and location of tests shall be in accordance with the following guidelines:

a. Testing shall be in accordance with ISO 8502-6/8502-9 at the rate of four (4) tests per 1,000 sq. ft. of steel surface area to be coated.

b. Tests shall be concentrated at areas of metal loss or along weld seams and shall provide a representative sample.

3.07 Soluble Salt Testing Acceptable Levels

A. The acceptable level of soluble salts shall be measured as an over conductivity level. The target threshold or tolerance conductivity level for soluble salt contamination shall be 70 micro-siemens/cm or lesser level required by the coating manufacturer for interior immersion surfaces.

B. If unacceptable results are found on exterior atmospheric surfaces, the following cleaning methods are suitable for removing the chlorides to acceptable levels.

1. Cleaning utilizing a steam generator capable of producing steam/hot water temperature of 150°F minimum.
2. Hot water pressure washing at 150°F using clean, fresh, potable water only. The steam/hot water shall be applied using a lance with a nozzle providing a fan shaped spray pattern. The recommended discharge temperature is 140°F for safety reasons. CONTRACTOR/CSA shall take appropriate safety precautions during use of hot water

3. The use of chloride removing products such as CHLOR*RID® or an equivalent product is acceptable IF the CONTRACTOR/CSA provides written approval by the CSM that the products are compatible.
4. Additional testing after cleaning shall be done to ensure the minimum allowable limits are met at no additional cost to the owner.

3.08 Surface Preparation Methods

A. Steel Pipe Exterior and Interior Surfaces

All exterior steel surface preparation shall be performed by dry abrasive blasting with a grit size sufficient to produce the required surface profile.

1. Prior to abrasive blasting all oil, grease, dirt, and any other foreign contaminant shall be removed from the surface.
2. All surfaces shall be abrasive blasted to meet SSPC SP10/NACE #2 Near White Metal cleanliness with a minimum surface profile of 3 mils.
3. Preparation of metallic surfaces shall be based upon comparison with SSPC-VIS1-89 (ASTM D2200)
4. Care must be taken to prevent contamination of the surface after blasting from worker's fingerprints, deleterious substances on workers' clothing, or from atmospheric conditions.
5. It is the responsibility of the CONTRACTOR/CSA to ensure the blast is protected from flash rusting or rust bloom by operating dehumidification and/or indirect fired heat to maintain a relative humidity of < 40% for the entirety of the application or until a coating is applied. Any rust bloom or flash rusting shall be removed by the CONTRACTOR/CSA at no additional cost to the owner.
6. All blasted steel is to be lined/coated within 8 hours of blasting. Any abrasive blast cleaned steel that is not coated during that time period shall be re-blasted before being lined or coated. If the steel suffers from flash rusting or any other contamination before lining or coating, it must be decontaminated and re-blasted, whether or not 8 hours has elapsed since blasting
7. Following surface preparation, thoroughly blow down and vacuum clean all surfaces to be lined/coated to remove all loose dust, dirt, and spent abrasive leaving a dust free, sound substrate.
8. Use clean, dry, oil-free air to blow the dust, grit, or other foreign matter from the substrate in a manner that does not affect the cleaned surface or other pipe in the area. Vacuum cleaning or other methods may be used in place of compressed air. An example of the minimum acceptable dust rating could be 3 or less according to ISO 8502-3:1992(E).
9. The cleaned and blasted interior and exterior surfaces of pipe and fittings shall be inspected for adequate surface preparation according to this Section, ASTM D-4417 and SSPC VIS 1. Surface imperfections such as burrs and weld splatter

shall be removed by hand filing or grinding to prevent holidays in the applied coating.

3.09 Coating Application Requirements

A. Material Systems Field coats shall consist of the following;

1. Exterior Coating and Interior Lining – 100% Solids Polyurethane that meets ASTM D16 Type V and complies with AWWA C222-08

2. Repair Materials – Repair materials shall be of the same generic chemistry as the pipe coating and from the same manufacturer.

3. Finish coat- 100% Solids Polyurethane

   a. Exterior Coating minimum 25.0 DFT
   b. Interior Lining minimum 40.0 DFT

3.10 Application

A. The completed coating/lining work shall be completed using "best industrial painting practices" as per SSPC Best Painting Practices Volume 1, 5th Edition and provide a satisfactory film and smooth even surface. Materials shall be thoroughly stirred, strained (as required) and kept at a uniform consistency during application. Materials shall be installed as per the latest up to date manufacturer's instructions regarding equipment. organic content (VOC) of any material (as applied) shall comply with prevailing air pollution control regulations. Unless otherwise specified, materials shall not be thinned or reduced.

B. The lining/coating shall be applied according to the manufacturer's application instructions.

   1. M**anual Spray.** Pipe and fittings to be sprayed manually shall use a one-coat multi-pass spray technique
   2. **Automatic Spray**. Pipe to be internally lined or externally coated using automatic spray equipment may use a single or multiple pass application to achieve the desired lining/coating thickness.

C. Recoating shall be permitted without further surface preparation, provided the lining/coating has cured less than the maximum time specified by the lining/coating manufacturer. It is important to note that the recoat window varies depending on the spray equipment temperature setting, the ambient conditions, product temperature/thickness, and the temperature of the substrate being coated. Where the lining/coating has cured for more than the recoat time, the lining/coating shall be brush-blasted or thoroughly sanded, followed by blow-off cleaning using clean, dry, high pressure compressed air. All surfaces to be recoated must show a surface profile of 2.0 mils (50 microns) or more.

D. Cut Back for Field Welds- When the pipe sections are to be joined together by field welding, a band of 3 inches or more (75 mm) of steel on the internal and/or the external shall be left uncoated. This band is to receive the same surface preparation as the rest of the pipe.

E. Non- Welded Joints- When gaskets or mechanical couplings are used to connect the pipe sections together, the pipe is to be lined/coated to its end with no cutback. Care is to be taken so that the applied lining/coating thickness is within the tolerance allowed by the pipe or coupling manufacturer. The lining/coating may be applied as thinly as 10 mils (250 microns) on the external of the spigot and/or the internal of the bell provided that area is tested to be holiday-free.

F. Welded Bell & Spigot Joints

a. Standard Procedure - A cutback as described in Section 3.10. D is to be created where the size of the cutback is calculated using distance from the end of the pipe to the weld plus an additional 3 inches.

b. Alternate Procedures- Alternate procedures for coating the joints may be considered by the owner with the approval of the lining/coating manufacturer.

3.11 Final Testing

A. All final testing is subject to observation by the owner, owner's representative at the owner's discretion.

B. Testing shall include but not be limited to the following methods.

1. No excessive runs, sags, protrusions, or depressions
2. No dry spray or other surface defects
3. Solvent rub test as per ASTM D4752-20 to verify cure
4. Ensure no off-ratio material has been applied.
5. Dry Film Thickness testing as per SSPC PA2 Level 3
6. High Voltage holiday testing as per ASTM D5162-21/NACE SP 0188
7. Finish texture of coatings shall be uniform.

3.12 Clean Up

A. Upon completion of coating, the CONTRACTOR/CSA shall remove surplus materials, equipment, protective coverings, and accumulated rubbish, and thoroughly clean all surfaces and repair any overspray, spatter, or other related damage. The surrounding surface areas including all other surfaces shall be restored to their pre-project condition.

3.13 Final Inspection

A. Perform a final inspection to determine whether the material system work meets the requirements of these specifications. The Consultant/Engineer will conduct final inspection with the Contractor.

3.14 System Thickness Requirements and Coating/ Lining Schedule

A. The CONTRACTOR/CSA is required to attain the minimum total thickness (DFT) regardless of substrate condition, application method or number of coats required.

B. Protective Coating/Lining System Dry Film Thickness Requirements are as follows:

Surface Preparation	Manufacturer	Product	Minimum (miles)	
			External Coating	Internal Lining
SSPC-SP10/NACE#2 Near White Metal Blast	Sherwin Williams	Corropipe 3000 or Poly-Cote 110	25	40
SSPC-SP10/NACE#2 Near White Metal Blast	Chemline	Chemthane 2265	25	40
SSPC-SP10/NACE#2 Near White Metal Blast	LifeLast	Dura-Shield 210	25	40

3.15 CONTRACT CLOSEOUT

A. Provide in accordance with owner's contract documents.

PART 4 ACCEPTANCE CRITERIA

4.01 General Requirements

A. Products shall not be used until the Engineer has inspected the materials, the CSM's representative has instructed the CONTRACTOR/CSA and the Engineer in the surface preparation, mixing, and application of products.

B. No solvent, additive, or adulterant shall be added to any component or mixed material without written consent by the CSM.

C. Surfaces not to be coated shall be masked using duct tape or other protection materials to prevent these surfaces from being coated or lined.

D. The CONTRACTOR/CSA must follow the minimum and maximum recoat or reapplication limitation times and related temperature range restrictions between successive coats for all products specified herein.

E. Each spray applied pass of any coating material shall be at 90-degree angles to the prior pass to ensure uniform coverage.

F. All equipment used for coating system application shall be as recommended by the CSM.

G. Coated or lined surfaces shall be free from runs, drips, ridges, waves, and laps. Coats shall be applied so as to produce an even film of uniform thickness completely coating corners and crevices. Coating work shall be done in accordance with the requirements of SSPC Paint Application Specification No. 1.

H. The Contractor's equipment shall be approved by the CSM for application of the materials specified. Spray equipment shall be equipped with mechanical agitators, pressure gages, and pressure regulators, and spray nozzles of the proper sizes.

I. Care shall be exercised to avoid over spraying or spattering materials on surfaces not to be lined or coated.

J. Adjacent areas and installations not to be coated shall be protected by taping, drop cloths, or other suitable measures.

K. Unless specified elsewhere herein, the CONTRACTOR/CSA shall comply with the CSM's most recent written instructions with respect to the following:

    1. Mixing of all materials.
    2. Protection and handling of all materials.
    3. Recoat limitation and cure times and surface preparation of coatings or lining to be overcoated or recoated.
    4. Minimum ambient and substrate temperatures, substrate's degree of dryness, relative humidity, and dew point of air.
    5. Application.
    6. Final curing.
    7. Use of proper application equipment

L. The applied coating and lining systems, including all repair materials, shall be protected from damage during curing and shall be cured as recommended by the CSM.

M. Pay special attention to manufacturer’s recommendations regarding substrate moisture, substrate temperature, moisture vapor emissions and monitoring and testing thereof prior to the installation of coatings, linings, and repair materials.

N. Pay special attention to manufacturer’s recommendations regarding minimum and maximum recoat times and cure times at certain temperatures for all materials.

O. Refer to schedule in 3.14 for required thicknesses.

P. Prior to the application of each coat of the specified coating on ferrous metal substrates, all edges, corners, intersections, bolts, nuts, washers, weld seams and other deviation from smooth surface shall be given a stripe coat by brush.

Q. Under no circumstances shall the breaking-up or partial use of kits of the specified materials be allowed during mixing and application of the coating/lining system materials. Whole kits shall be mixed and applied only to avert off-ratio materials problems.

4.02 Field Quality Assurance Inspection Testing

A. Inspection by the Coating Consultant, Engineer or others does not limit the CONTRACTOR/CSA's responsibilities for quality control inspection and testing as specified herein or as required by the CSM's written instructions and recommendations.

B. As a part of a Quality Assurance program, the Owner may conduct any or all of the testing detailed in 1.06 of this specification to verify the Contractors compliance with the specifications and to validate the results of the Contractors Quality Control testing. The CONTRACTOR/CSA shall cooperate with the Owners inspector by providing access to all of the surfaces that the Owners inspector directs (including rigging and scaffolding as necessary), managing the confined space access program, and providing lighting and ventilation. The CONTRACTOR/CSA shall cease other Work during these inspections.

4.03 Acceptance Criteria

A. Surface Preparation Work

1. All surfaces shall be prepared in accordance with the specification and referenced standards herein.

2. The minimum surface profile of metallic surfaces meeting the requirements of this specification and the CSM written requirements.

3. All surface preparation conditions of this specification shall meet the minimum requirements of cleanliness and surface profile immediately preceding the beginning of primer application.

4. The surface shall be suitably dust and contaminant free and in sound condition prior to application of primers and all finish coats.

Substrate	Function	Standard	Acceptance Criteria
Steel	Surface Preparation	Pre-Cleaning SSPC-SP1	Free of all Oil Grease and Foreign Contaminants
Steel	Surface Preparation Chloride Testing	ISO 8502-6/8502-9	70 micro-siemens/cm or Less.
Steel	Surface Preparation Blasting	ASTM D4285 Blotter Test	No Oil or Moisture in Compressed Air
Steel	Surface Preparation Blasting	SSPC-SP-10/NACE #2	Maximum 5% Staining as per SSPC- VIS1

Steel	Surface Preparation Surface Profile	ASTM D4417 Method A or C	Minimum 3.0 Mil Jagged Profile.
Steel	Surface Preparation & Coating Application	ASTM E337	Surface Temp 5F Above Dewpoint and Stabilized. 85% RH Maximum
Steel	Coating Application Wet Film Thickness	ASTM D 4414	Meets the CSM Data for Wet Film Thickness
Steel	Coating Application Dry Film Thickness	SSPC-PA2	Within The Specified DFT of this specification
Steel	Coating Application Cure	ASTM D2240 Hardness Test	Must Match CSM's Published Shore D Value
Steel	Coating Application Holiday Testing	ASTM 5162 or NACE SP0188	Free of all Holidays and Pinholes
Steel	Coating Application Adhesion Testing	ASTM D4541	Minimum 1500 psi

END OF SECTION

SECTION 13310

UTILITY CONTROL INSTRUMENTATION SYSTEM

PART 1 – GENERAL

1.01 DESCRITION:

A. The contractor will retain the services of Aaron Associates of Connecticut to perform as the System Integrator as defined in these specifications:

Aaron Associates of Connecticut, Inc.
Mattoon Rd. Waterbury, CT 06708
Phone (203) 753-1536

B. Aaron Associates will provide SCADA hardware and programming including PLC panels and appurtenances, and integration of the SCADA equipment into the existing treatment plant SCADA system. The general contractor will provide, install, and calibrate instruments.

C. Provide, calibrate, and test the instrumentation and control systems specified. Provide equipment, installation services and appurtenances required to achieve a complete, integrated and fully operational system.

D. Provide instruments as specified herein and as indicated on the Contract Drawings. Also provide instruments identified in Specification Sections

E. Provide control panels and components as specified herein and in Appendix A, and as indicated on the Contract Drawings.

F. Provide programming and system operation in accordance with loop descriptions indicated within Appendix B.

G. All equipment shall comply with the electrical area classification indicated on the electrical drawings.

H. Provide materials and equipment which are listed, labeled, or certified by Underwriters Laboratories (UL) Inc. or equivalent, where such standards have been established.

1.02 RELATED WORK:

A. Division 1: General Requirements

B. Division 11: Equipment

C. Division 16: Electrical

1.03 REFERENCES:

A. National Fire Protection Association (NFPA)

B. Underwriters Laboratories (UL)

C. National Electrical Manufacturers' Association (NEMA)

D. International Society of Automation (ISA)

E. The Institute of Electrical and Electronics Engineers (IEEE)

F. The American Society for Testing and Materials (ASTM)

G. National Institute of Standards and Technology (NIST)

1.04 SUBMITTALS:

A. Submit the following in accordance with Section 01300:

1. Wiring diagrams, control panel elevations, catalog cut sheets and descriptive literature. Annotate information to clearly identify the proposed items and options.

2. Submit documentation that all control panels are constructed in conformance with UL 508A and bear the UL seal confirming the construction.

3. Control Panel Submittal:

a. Submit control panel loop diagrams on 11 inch by 17 inch sheets. Show all loops in their entirety including control wiring within and between all field devices including those devices furnished under other Divisions. Clearly identify the selector switch contact states in each selector switch position. Identify normally open or normally closed status for all relay and switch contacts. Assign each wire a unique wire number. Show all power sources, grounding, isolation, and lightning protection. Show both analog and discrete signals on a single loop diagram

b. Submit equipment outline drawings showing exterior and interior elevations, front panel arrangement, internal panel wiring and internal panel layout.

c. Provide complete Bill of Materials indicating manufacturer's part numbers.

d. Certified shop test, field test and inspection reports.

e. Identify where exceptions are being taken or an "or equal" piece of hardware is being proposed.

4. Instrument Submittal:

a. Instrument manufacturing data sheets indicating pertinent data. Identify each instrument submitted with applicable loop numbers and nomenclature as indicated on the Contract Drawings and specifications.

b. Instrument drawings indicating dimensions, mounting and external connection details.

1.05 QUALITY ASSURANCE:

A. Calibrate all instrumentation. Provide calibration tag to all calibrated instruments. The calibration tag shall have the name and phone number of the SI who performed the calibration with the date of calibration. Provide calibration records to the Engineer prior to substantial completion.

B. The SI shall coordinate with the mechanical and electrical system suppliers to identify any signal isolation or auxiliary relays that may be required to complete the system.

C. Protect materials and equipment against damage during shipping, storage, and construction.

PART 2 – PRODUCTS

2.01 GENERAL:

A. Equipment, cabinets, instruments, and other devices furnished under this section shall be suitable for continuous use in the intended application.

B. The system shall consist of current production products.

C. I/O points required are identified by type on the Contract Drawings.

2.02 INSTRUMENTS:

A. Provide instruments in accordance with the data sheets attached to this specification as 13310-A.

B. Data sheets specify minimum requirements.

C. Provide all brackets, hangers, and miscellaneous metals for mounting of equipment. Mounting hardware shall be installed in accordance with the manufacturers printed recommendations and not interfere with any other equipment.

D. All equipment shall be tested at the factory prior to shipment.

2.03 CONTROL PANELS:

A. Control Panel Enclosure

1. Panels furnished under this section shall be of the design, arrangement and size as shown on the Contract Drawings and specified herein.

2. Provide control panels with NEMA rating in accordance with the electrical area classification indicated on the electrical drawings.

3. Provide panels doors extending the full width for full access to panel-rear mounted components. Doors shall open 180° and be provided with drawing pocked to hold as-built and service documentation.

B. Surge Protection

1. Provide Surge Protection Devices (SPDs) for panel as follows:
   a. For each power feed into the control panel.
   b. Rated a minimum of 10 kilo amps (kA)
   c. With light indicating fault
   d. Mount SPD inside control panel
   e. Minimize lead length of SPD
   f. SPD manufactured by Joslyn, Dehn, MTL, Harger or equal

2. Provide surge protection for analog signals as follows:
   a. For signals originating in a structure outside the one housing the control panel or greater than 200 feet from the control panel.
   b. Surge protection shall be: two-stage common-mode protection by means of arrestor reactor and varistor in combination and differential mode protection by means of gas arrestor, reactor and zener diode in combination.
   c. Rated a minimum of 10 kilo amps (kA)
   d. Manufactured by Dehn, Harger, MTL or equal.

C. Courtesy Equipment

1. Provide a 120VAC duplex service receptacle and switchable light fixture within each control panel.

D. Power to Remote Instruments

1. Provide provisions for power to field instruments from the same panel that receives the signal. Feed each instrument from an individual fused disconnect or circuit breaker.

E. Mounting

1. Mount all panel components to allow easy access for servicing, calibration, adjustments, testing and removal, without the removal of other equipment.

2. Provide internal panel components mounted directly on removable plates made of the same material and finish as the panel, of a thickness to provide rigid support for mounted components.

3. Mount all equipment on wall of panel enclosure. Loose equipment on the floor of enclosure is not acceptable.

F. Labeling

1. Attach identification labels to all internal components.

2. All control panel wiring shall be numbered at both ends with type written heat shrinkable wire markers. Number wiring in accordance with the numbering system used on the instrument submittal drawings.

3. Terminal strip labeling shall be identical to the wire numbers.

G. Switching

1. Pushbuttons shall be of oil-tight, heavy-duty momentary contact pushbuttons, rated for 10A at 120VAC unless specified otherwise.

2. Rotary selector switches shall be oil-tight, heavy-duty, maintained contact type rated for 10A at 120VAC.

H. Indicating Lights

1. Provide oil-tight, heavy-duty, LED cluster type pilot lights, with average life of 40,000 hours, minimum, unless otherwise specified.

I. Control Relays

1. Provide sealed relays DIN rail mounted with indicating light to indicate its' operation. Contacts shall be rated for 10A at 120VAC.

2. Provide electronic timer delay of the plug-in, digital type with output contacts rated for 10A at 120VAC.

3. Provide all relays from a single manufacturer.

J. Termination Points

1. Terminate all wiring at a central terminal array consisting of rigid terminal strips with numbering identical to the wire numbers.

2. Arrange the terminal blocks into functional groups indicated below:

   a. 120VAC power wiring
   b. DC power wiring
   c. Discrete signals
   d. Analog signals

3. Provide 25% spare terminal blocks for each functional group.

4. Use only one side of each terminal block row for internal wiring. Use the other side for field wiring. Do not locate terminal blocks within 6 inches of any right angle panel surface.

5. Provide terminal blocks of corrosion proof material such as nickel plated copper. Provide AC and DC control terminals suitable for 12 AWG or larger wire. Provide terminals for DC analog signals suitable for 16 AWG wire.

K. Wires

1. Power and control wire shall be 600 Volt class, Type THHN/THWN insulated stranded copper and shall be of the sizes required for the current to be carried, but not smaller than 14 AWG.

2. Provide 16 AWG shielded cable pairs for all analog signals internal to the panels.

L. Wiring Methods

1. Grounding

   a. Provide a grounding terminal strip bonded to the panel enclosure with 20 percent spare terminals.

   b. Individually connect ground wires between control panel components to grounding terminal strip.

2. Wire Troughs

   a. Provide internal wiring troughs of the plastic, open-side type with snap-on covers.

   b. Wiring troughs shall not be filled to greater than 60% capacity. Provide snap-on covers marked to identify their locations.

3. Wire Path

   a. Group wiring within the panel according to function. Harness groups together or place within ducts which are secured to the panel structure.

   b. Remote instrument power shall not be commingled with panel power for other panel devices.

   c. Crossings of the two system's wires shall be at right angles. Parallel runs of the two system's wires shall be separated by a minimum of 12 inches.

   d. Partition intrinsically safe wiring separately from all other wiring. Provide a protective cover with labeling to cover the intrinsically safe wires.

4. Wire colors shall be assigned as follows:

AC Power	Black
AC Neutral or Common	White
AC Control	Red
DC Control	Blue
Equipment or Panel Ground	Green
Externally Powered Circuits	Yellow

5. Wire connectors shall be the hook-fork type, with non-insulated barrel to allow easy inspection of crimp integrity.

M. Signal Management

1. Design all instrumentation equipment to operate on 120VAC, +/-10%, at 60Hz, except as specifically noted. Provide power supplies, regulators, and constant-voltage transformers to allow compliance with the above.

2. Provide electronic type solid-state instrumentation utilizing linear transmission signals of 4-20mADC, (milliampere direct current), except as specifically noted.

3. Provide 4-20mADC outputs capable of driving a 750 ohm load from all transmitters, controllers, and signal processing devices. Inputs to controllers, recorders, indicators, signal processing devices shall be 4-20mADC.

4. Convert nonstandard signals into compatible standard signals at their source. Zero based signals are not acceptable.

5. Direct interlock of equipment without auxiliary relaying shall not be allowed.

6. For all signals to be transferred to/from another panel, provide current isolators (analog) or dry relay contacts (discrete) wired out to terminal blocks.

N. Operator Interface Terminal (HMI)

1. Provide HMI as specified in the data sheet in Attachment A (13310-A).

O. Uninterruptable Power Supply (UPS)

1. Provide UPS as specified in the data sheet in Attachment A (13310-A).

P. Programmable Logic Controller (PLC)

1. Provide PLC as specified in the data sheet in Attachment A (13310-A).
2.

Q. Ethernet Switch

1. To coordinate with the Commission's standards, provide Red Lion NTron managed ethernet switch, model NT24k-12SFP-DM4.

2.04 SHOP TESTING

Provide a shop, factory and field test plan outlining the SI's procedures for testing all field primary devices, final control elements, local control panels, the control system and termination cabinets at the factory prior to shipment. This plan shall demonstrate the system performs as specified and as indicated. Submit the shop test plan with the shop drawings as specified. Submit results of test to Engineer.

PART 3 – EXECUTION

3.01 GENERAL INSTALLATION

A. Instrumentation and accessory equipment shall be installed in accordance with the manufacturer's printed instructions and approved shop drawings.

B. The locations of equipment, transmitters, alarms, and similar devices are diagrammatic only. Exact locations shall be determined by the SI during development and fabrication of systems.

C. The shield on each process instrumentation cable shall be continuous from source to destination and be grounded as directed by the instrument manufacturer, but in no case shall more than one ground point be employed for each shield.

D. All work shall be executed in full accordance with codes and these contract documents. Should any work be performed contrary to said rulings, ordinances and regulations, the SI shall bear full responsibility for such violations and at no additional cost to the Owner.

E. All equipment used in areas designated as hazardous shall be designed for the Class, Group and Division as indicated in the area classification schedule on the electrical drawings.

F. Unless specifically indicated, direct reading or electrical transmitting instrumentation shall not be mounted on process piping. Instrumentation shall be mounted on instrument racks or stands as detailed on the installation detail drawings. All instrumentation connections shall be provided with shutoff and drain valves. For differential pressure transmitters, valve manifolds for calibration, testing and blowdown service shall also be provided. For slurries, chemical or corrosive fluids, diaphragm seals with flushing connections shall be provided.

G. All piping and tubing to and from field instrumentation shall be provided with unions, calibrations and test tees, couplings, adaptors, and shut off valves. Process tubing shall be installed to slope from the instrument toward process for gas measurement service and from the process toward the instrument for liquid measurement service. Provide drain/vent valves or fittings at any process tubing points where the required slopes cannot be maintained.

3.02 FACTORY TESTS:

A. The SI shall test all equipment provided by the SI at the factory prior to shipment unless otherwise specified.

B. Each test shall be in the cause and effect format. The person conducting the test shall

initiate an input (cause) and upon the system's or subsystem's producing the correct result (effect), the specific test requirement will have been satisfied. The SI shall provide a detailed step by step test procedure for review and approval by the Engineer.

C. All tests shall be conducted in accordance with prior Owner and Engineer approved procedures, forms, and checklist. Each specific test to be performed shall be described and a space provided after it for sign off by the appropriate party after its satisfactory completion.

D. No equipment shall be shipped until the Owner has received all test results and approved the system is ready for shipment.

3.03 INSTRUMENT INSPECTION AND CALIBRATION:

A. Calibrate instrument with calibration tools that conform to NIST traceability chain. Calibration instruments shall be twice as accurate as the instrument being calibrated but as a minimum the calibration instrument shall have a measurement uncertainty of 0.02 percent.

B. Provide calibration of instruments at 10%, 50%, 80% and 100% of measured span. Provide calibration tag for all calibrated instruments. Provide calibration tag with name, phone number, date and signature of the person and company performing the calibration. Provide calibration documentation and records to the engineer prior to substantial completion.

3.04 FIELD TESTS:

A. Perform field testing in accordance with equipment manufacturer recommend instructions.

B. The test shall be in the cause and effect format. The person conducting the test shall initiate an input (cause) and upon the system's or subsystem's producing the correct result (effect), the specific test requirement will have been satisfied. The SI shall provide a detailed step by step test procedure for review and approval by the Engineer prior to testing. Each specific test to be performed shall be signed off by the appropriate party after its satisfactory completion.

C. Wherever possible, perform tests using actual process variables, equipment, and data. Where it is not practical to test with real process variables, equipment, and data, provide suitable means of simulation. Define these simulation techniques in the test procedures.

D. Signed copies of the test procedures prepared by the SI, forms and checklists will constitute the required test documentation.

E. The SI shall furnish the services of field service engineers, all special calibration and test equipment and labor to perform the field tests.

F. A witnessed Functional Acceptance Test shall be performed on the complete system to demonstrate that it is operating and in compliance with these specifications. Each specified function shall be demonstrated on a paragraph by paragraph, loop by loop, and site by site basis.

3.05 START-UP TESTING:

A. After completion of the Field Tests indicated above, the acceptance testing period shall begin. All furnished hardware and software shall operate for a period of 30 consecutive days, under conditions of full plant process operation, without a single non field repairable malfunction.

B. During this test, operations personnel and SI personnel shall be present as required. The SI shall have staff available, within 4 hours of notification, who have an intimate knowledge of the hardware and SI furnished systems.

C. While the start-up testing is proceeding, the Owner shall have full use of the system.

D. Any malfunction to the SI' system during the tests shall be analyzed and corrected by the System Integrator. The Owner shall determine whether any such malfunctions are sufficiently serious to warrant a repeat of this test.

E. Any malfunction attributed to the SI during the Start-up Testing which cannot be corrected within 24 hours of occurrence by the SI's personnel, or more than two similar failures of any duration, will be considered as a non field repairable malfunction.

F. Upon completion of repairs by the SI, the associated test shall be repeated as specified herein.

G. In the event of rejection of any part or function, the SI shall perform repairs at no additional cost to the Owner.

H. Upon successful completion of the 30 day startup operation test and subsequent review and approval of complete system final documentation, the system shall be considered Substantially Complete, after approval by the Owner and Engineer.

3.06 CONTRACT CLOSEOUT:

A. Provide in accordance with Section 01700.

END OF SECTION

SECTION 13310A

CONTROL SYSTEM AND PROCESS INSTRUMENTS DATA SHEETS

DIFFERENTIAL PRESSURE TRANSMITTER SPECIFICATION

DATA SHEET NO. 417.1

GENERAL -			
1.	Tag Number	:	SEE TABLE
2.	Service	:	SEE TABLE
3.	P & I D No.	:	SEE TABLE
4.	Location	:	SEE MECHANICAL PROCESS DRAWINGS
TRANSMITTER			
5.	Type	:	INTELLIGENT, MICROPROCESSOR BASED
6.	Element	:	CERAMIC CELL, RESONANT WIRE OR PIEZO-RESISTIVE SENSOR
7.	Remote Calibration	:	ZERO AND SPAN VIA HANDHELD TERMINAL, WITHOUT ADDITIONAL HARDWARE, AT ANY TERMINATION POINT IN LOOP
8.	Transmittal/Terminal	:	TWO WAY COMMUNICATION VIA LOOP WIRING, SEE NOTE a
9.	Self Diagnostics	:	CONTINUOUS
10.	Ambient Temp. Comp.	:	AUTOMATIC
11.	Power Supply	:	24 VDC
12.	Output Signal	:	4 - 20 mA DC OR DIGITAL
13.	Dir/Rev Acting	:	DIRECT
14.	Turn Down	:	6 : 1
15.	Span and Zero	:	CONTINUOUSLY ADJUSTABLE, NON-INTERACTING
16.	Accuracy	:	+/- 0.1% OF CALIBRATED SPAN
17.	Repeatability	:	+/- 0.5%
18.	Local Indicator	:	REQUIRED
19.	Indicator Display	:	DIGITAL; ENGINEERING UNITS, SIGNAL OUTPUT AND DIAGNOSTICS
20.	Bypass Manifold	:	REQUIRED, 3 VALVE TYPE, 316 SS
21.	Span (Elev/Suppr)	:	UP TO 500% OF CALIBRATED SPAN
22.	Integ. Sq.Rt.Extr.	:	REQUIRED ONLY FOR DIFFERENTIAL FLOW METERS
23.	Enclosure	:	NEMA 4X/IP65/NEMA 7 CLASS I DIV 1 GROUPS A, B, C, D LOCATIONS, AND NONINCENDIVE FOR CLASS I DIV 2, GROUPS A, B, C, D LOCATIONS
24.	Electrical. Classification	:	SEE ELECTRICAL
25.	Mounting	:	WALL OR PEDESTAL
26.	Process Connections	:	1/2 INCH NPT
MATERIALS OF CONSTRUCTION			
27.	Body	:	LOW COPPER ALUMINUM

28.	Wetted Parts	:	316 STAINLESS STEEL, FOR CORROSIVE CHEMICALS PROVIDE TANTALUM DIAPHRAGM AND TEFLON GASKETS AND HASTELLOY BODY, PROCESS FLANGE AND SENSOR WITH TEFLON GASKETS
29.	Fill	:	SILICONE OIL
SERVICE CONDITIONS			
30.	Fluid	:	SEE TABLE
31.	Specific Gravity	:	APPROX. 1.0
32.	Flow Range	:	N/A
33.	Max.Static Pressure	:	150 PSI
34.	Diff	:	SEE TABLE IN PSI
35.	Operating Temp.	:	-20 TO 120 DEG. F SEE NOTE e
36.	Ambient Temp.	:	30 TO 100 DEG. F.
MISCELLANEOUS			
37.	Manifold Manufacturer.	:	ANDERSON GREENWOOD, NOSHOK, PGI OR APPROVED EQUAL
38.	Manufacturer(s)	:	E+H,FOXBORO, SIEMENS, OR APPROVED EQUAL
39.	Model No.(s)	:	DELTABAR, IDP25, SITRANS, OR EQUAL

Data Sheet 417.1 (CONTINUED)

NOTES.

a. Remote communication must not interfere with the analog output signal. Use frequency shift keying (FSK) technique for communication.
b. Provide standard manifold mounting bracket. Installation of manifold and transmitter: mount the manifold not the transmitter such that the transmitter may be removed for service by removing the four transmitter bolts and disconnecting the signal leads.
c. Provide AGCO M20 manifold for all differential pressure transmitters W/H5VIS-22 drain valve and AMS 316 SS AGCO mount.
d. Provide 316 SS ½-inch rigid tubing for connection between process measurement primary and process transmitter/manifold. All tubing shall be cut and bent with tube manufacturer approved tools
e. Provide SS tubing connectors
f. Provide 4-inch flush diaphragm for all level indicating transmitters. Diaphragm material to be resistant to the process fluid.

TAG N	SERVICE	FLUID	RANGE	P&ID
PDIT 10913	Basket Strainer 1	RW	*	10 DI-602
PDIT 10923	Basket Strainer 2	RW	*	10 DI-602
PDIT 10933	Basket Strainer 3	RW	*	10 DI-602

* Coordinate with Specification Section 15107 and strainer manufacturer for differential pressure ranges.

PROGRAMMABLE LOGIC CONTROLLER (PLC) SPECIFICATION

DATA SHEET NO. 567.2

1.	Tag Number	EDV.CP-1-PLC
2.	P & I D No.	00 DI-601
3.	Location	EDV Electrical Enclosure

CONTROLLER

4.	Processor	ALLEN BRADLEY COMPACTLOGIX 5370 OR EQUIVALENT AT THE BID SUBMISSION.
5.	Discrete Inputs	24 VDC 7mA Wetting Current.
6.	Analog Inputs	INTO 250 OHMS Maximum Load.
7.	Discrete Outputs	24 VDC on Current 2A Continuous.
8.	Contact Rating	24 VDC @ 10 AMPS -- Provide interposing relays.
9.	Analog Outputs	INTO 500 Ohms Minimum.
10.	Memories	As necessary to operate plus 30% spare capacity.
11.	Communications	Provide open network to suit the project application. Provide for future migration to other automation equipment. Provide upward migration to personal computers and servers.
12.	Network Features	Open system, conforming to OSI ISO seven layer model. Provide for remote I/O communication, PLC peer to peer communication and communication to field devices over field bus. Provide communication to higher level computing or process control system.
13.	Ports	Provide ports required to connect to remote I/O, Data Highway, and Laptop PC.
14.	Mounting	Chassis system in back of panel.
15.	Connections	Provide individually fussed terminal blocks.
16.	Diagnostic Indicators	DC Power OK, PC Run, CPU Fault, Battery Low, Forced I/O, I/O Status.

POWER SUPPLY

17.	Nominal Volts	120 VAC 60 HZ
18.	Min Supply Volts	85 VAC
19.	Max Supply Volts	132 VAC
20.	Power Loss Duration	Withstand power loss for a minimum of 20 mSEC.

21.	Battery Back-up	See Data Sheet 702

SERVICE CONDITIONS

22.	Environmental	Operate at 0-140°F (0-60°C) and 5-95 percent humidity non-condensing.

OPERAOR INTERFACE TERMINAL (OIT)

23.	OIT	Provide Allen Bradley Panelview Plus 7 Touchscreen Color OIT, minimum of 15 inches.

MISCELLANEOUS

24.	Connection	Provide highest data-throughput level possible to provide updates for all system points at a frequency to support a real-time connection.
25.	Documentation	Provide all distribution media and documentation.
26.	Manufacturer(s)	ALLEN BRADLEY COMPACTLOGIX.
27.	Operating Sequence	See Specifications.
28.	Documentation	Provide hard copy and electronic files in USB flash drives with ladder diagrams.

NOTES:

a. Provide preliminary ladder diagram with PLC submittal.

b. Provide 20% active spare I/O. Provide as a minimum one spare card of each I/O type.

c. Provide true PID algorithm for continuous control like level, flow and chemical feed.

UNINTERRUPTIBLE POWER SUPPLY SPECIFICATION

DATA SHEET NO. 702.1

GENERAL

1.	Tag No.	EDV.CP-1-UPS
2.	Service	LINE POWER CONDITIONING AND BACKUP POWER FOR PLC
3.	Location	IN PLC CABINET
4.	Input Voltage	208/120 VAC, 3/1 PHASE, 4 WIRE @ 60 HZ +/- 20%
5.	Output Voltage	208/120 VAC, 3/1 PHASE, 4 WIRE @ 60 HZ +/- 3% SINE WAVE, +/- 1% VOLATGE BALANCE SIMULATED SINE WAVE OUTPUT NOT ACCEPTABLE
6.	Input Current Total	
	Harmonic Distortion (THD)	3% AT 100% LOAD – 5% AT 50% LOAD
7.	Output Voltage	
	Harmonic Distortion	2% MAX. AT 100% LOAD
		5% MAX. AT 50% LOAD
8.	Power Factor	0.90 AT 100% LOAD
		0.90 AT 50% LOAD
9.	Operating Temp.	50 TO 104 DEG. F.
10.	Surge Protection	6000 VOLT AND MEET IEEE C62.41 CATEGORIES A AND B
11.	Backup Time	MINIMUM OF 45 MINUTES MINIMUM AT 120% OF FULL LOAD
12.	KVA Size:	1 KVA (PLC AND WORKSTATION)/3 KVA (SCADA SERVER) MINIMUM AND IN ACCORDANCE WITH SIZING CALCULATIONS REQUIREMENT SPECIFIED.
13.	Low Battery Ind.	REQUIRED
14.	Brownout Protection	REQUIRED
15.	UPS Type	VOLTAGE REGULATION LINE INTERACTIVE
16.	Efficiency	92% MINIMUM
17.	Transfer Time	LESS THAN ONE MILLISECOND
18.	Communication	RS-232 AND MODBUS ETHERNET COMMINUCATION
19.	Digital Display	TOUCH SCREEN

20.	Local Alarms	LEDs AND AUDIBLE
21.	Digital Alarm Contacts	LOW BACKUP TIME, OVERLOAD, REPLACE BATTERY, LOW BATTERY, LOAD ON INVERTER, LOAD ON BYPASS LCD FAULT, UPS FAULT
22.	Audible Noise	LESS THAN 50 dB @ 3 FT
23.	Certificate	UL LISTING

BATTERY

24.	Type	SEALED, LEAD ACID MIANTENANCE FREE
25.	Battery Protection	THERMAL, OVERVOLTAGE AND OVERCURRENT

MISCELLANEOUS

26.	Manufacturer(s)	EATON, BEST, SOLA, APC OR APPROVED EQUAL

27. NOTES:

a. Provide UPS system such that upon failure of the UPS feeder, batteries provided with UPS immediately take over as the power source.

b. Provide external bypass switch with three circuit breakers Make-Before-Break system. Provide bypass to isolate the UPS equipment for maintenance. Provide bypass with switch test so the switch may be tested without the risk of dropping the load caused by static switch failure.

c. Provide static transfer switch to transfer load upon loss of power at the output of the UPS.

d. Provide UPS sizing documentations in the shop drawing submittal. Provide sizing documentations analysis which is based on required load plus minimum of 10 percent spare capacity.

LEVEL TRANSMITTER (RADAR TYPE) SPECIFICATION

DATA SHEET NO. 859.1

GENERAL

1.	Tag Number	:	SEE TABLE
2.	Service	:	SEE TABLE
3.	P & I D No.	:	SEE TABLE
4.	Location	:	SEE MECHANICAL DRAWINGS
5.	Type	:	NON-CONTACT RADAR TRANSDUCER

TRANSMITTER

6.	Type	:	HORN ANTENNA RADAR- FMCW (FREQUENCY MODULATION CONTINUOUS WAVE
7.	Display	:	REMOTE LCD IP66 NEMA 4X
8.	Display Units	:	4 DIGIT W/ DECIMAL POINT
9.	Measuring Range	:	20 FEET
10.	Agitator Filters	:	REQUIRED
11.	Input Power	:	2-WIRE LOOP POWERED
12.	Output	:	4 - 20 mA DC ISOLATED
13.	Resolution	:	0.1-INCHES
14.	Accuracy	:	+/- 0.25% OF SPAN
15.	Adjustments	:	DIRECT SETTING BCD IN INCHES
16.	Alarms	:	LOSS OF ECHO AND NEAR ZONE USER CONFIGURABLE FOR HIGH OR LOW LEVEL CURRENT
17.	Material	:	PVDF
18.	Mounting	:	INTEGRAL
19.	Temp	:	-40E TO 70E C (-40E TO 160EF)
20.	Enclosure	:	IP66 NEMA 4X
21.	Beam Angle	:	LESS THAN OR EQUAL TO 3°

TRANSDUCER

21.	Enclosure	:	INTEGRAL TO TRANSDUCER
22.	Material	:	PVDF FOR WETTED AND NON-WETTED PARTS
23.	Mounting	:	6 -INCH FLANGE
25.	Frequency	:	80 KHz
26.	Temperature Comp	:	INTEGRAL WITH TRANSDUCER

Data Sheet 859.1 (CONTINUED)

PROCESS CONDITIONS

28.	Operating Temp.	:	32°F TO 250°F
29.	Operating Pressure	:	ATMOSPHERIC

MISCELLANEOUS

30.	Interconn. Cable	:	15M (50 FEET) OR GREATER SO THE TRANSMITTER CAN BE MOUNTED FOR OPERATOR ACCESS
31.	Manufacturer(s)	:	E&H, VEGA, SIEMENS OR EQUAL

NOTES.

a. Provide all necessary mounting hardware.
b. Provide detailed instructions for proper installation of sensor, transmitter and mounting hardware.
c. Provide 316 SS wall sleeve w/ 150 mm (6-inch) flange for mounting in top of tanks or wells.
d. Provide lightening and surge protection
e Provide detailed installation wiring diagrams specific to the installation application.
f. Provide 316 SS (fiberglass for chemical applications) UNISTRUT® floor or wall bracket for indicator or remote mount transmitter.
g. Provide linearization functions to measure flow in open channels or weirs. Provide linearization calculations to determine tank volumes.

TAG	SERVICE	RANGE	P&ID
LE/LIT 10941	EQUALIZATION TANK	0-21ft	10 DI-602
LE/LIT 10942	EQUALIZATION TANK	0-21ft	10 DI-602

ACCESS HATCH INTRUSION SWITCH SPECIFICATION

DATA SHEET NO. 1110 . 1

GENERAL

1.	Tag Number	:SEE TABLE
2.	Service	:SEE TABLE
3.	P & I D No.	: 99 DI-601
4.	Location	: EDV CHAMBER

SWITCH

5.	Type(Single/Dual)	: SINGLE
6.	Head Type	: BEST SUITED FOR HATCH. SEE NOTE b.
7.	Mounting	: ON HATCH FRAME. SEE NOTE c
8.	Matrl of Const	: 316 SS CAST BODY, 316 SS ACTUATOR & OPERATING HEAD,

FLUOROCARBON SEALS

9.	Enclosure	: NEMA 4X, 6 AND 6P
10.	Form	: DPDT
11.	Contact Rating	: 10 AMPS @ 120 V
12.	Output Signal For	: HATCH OPEN ALARM

MISCELLANEOUS

13.	Manufacturer(s)	: HONEYWELL MICRO SWITCH OR EQUAL
14.	Model No.(s)	: HDLS SERIES OR EQUAL

NOTES

a. Provide w/ sealed cable pre-wired connection
b. Provide written recommendation from hatch manufacturer on switch head type.
c. Provide details of mounting w/ hatch assemble w/ written approval of the hatch manufacturer.

TAG	SERVICE
ZSO 10955A	EDV CHAMBER HATCH #1
ZSO 10955B	EDV CHAMBER HATCH #2
ZSO 10955E	EDV CHAMBER HATCH #3

DOOR ALARM SWITCH ASSEMBLY SPECIFICATION

DATA SHEET NO. 1111 . 1

GENERAL

1.	Tag Number	:SEE TABLE
2.	Service	: SEE TABLE
3.	P & I D No.	: 99 DI-601
4.	Location	: EDV CHAMBER ELECTRICAL ENCLOSURE

SWITCH

5.	Type	:MAGNETIC CONTACT
6.	Housing	:ABS PLASTIC
7.	Mounting	:SURFACE W/ SS SCREWS W/ TAMPER-PROOF HEAD
8.	Terminals	:RECESSED
9.	Test Pts	:EXTERNAL
10.	Form	:SPDT
11.	Voltage	:30 V AC/DC
12.	Output Signal For	:DOOR ALARM SEE NOTE a

MISCELLANEOUS

13.	Manufacturer(s)	:SENTROL OR EQUAL

NOTES.

a. Provide each switch wired separately.

TAG	SERVICE
ZSO 10955C	ELECTRICAL ENCLOSURE #1
ZSO 10955D	ELECTRICAL ENCLOSURE #2

GAUGE PRESSURE TRANSMITTER SPECIFICATION

DATA SHEET NO. 1451.1

GENERAL

1.	Tag Number	:	PIT 10902
2.	Service	:	ENERGY DISSIPATION VAULT INFLUENT PRESSURE
3.	P & I D No.	:	10 DI-602
4.	Location	:	SEE PROCESS MECHANICAL DRAWINGS

TRANSMITTER

5.	Type	:	INTELLIGENT, MICROPROCESSOR BASED
6.	Element	:	CAPACITANCE CELL, RESONANT WIRE OR PIEZORESISTIVE SENSOR
7.	Remote Calibration	:	ZERO AND SPAN VIA HANDHELD TERMINAL, WITHOUT ADDITIONAL HARDWARE, AT ANY TERMINATION POINT IN LOOP
8.	Transmittal/Terminal	:	TWO WAY COMMUNICATION VIA LOOP WIRING SEE NOTE a
9.	Self Diagnostics	:	CONTINUOUS
10.	Ambient Temp. Comp.	:	AUTOMATIC
11.	Power Supply	:	24 VDC
12.	Output Signal	:	4 - 20 mA DC OR DIGITAL
13.	Dir/Rev Acting	:	DIRECT
14.	Turn Down	:	6 : 1
15.	Span	:	SEE TABLE
16.	Accuracy	:	+/- 0.1% OF CALIBRATED SPAN
17.	Repeatability	:	+/- 0.05%
18.	Local Indicator	:	REQUIRED
19.	Indicator Display	:	DIGITAL; ENGINEERING UNITS, SIGNAL OUTPUT AND DIAGNOSTICS
20.	Bypass Manifold	:	REQUIRED, 2 VALVE TYPE, 316 SS SEE NOTE b
21.	Span	:	UP TO 500% OF CALIBRATED SPAN
22.	Enclosure	:	NEMA 4X/IP65/NEMA 7 CLASS I DIV 1 GROUPS A, B, C, D LOCATIONS, AND NONINCENDIVE FOR CLASS I DIV 2, GROUPS A, B, C, D LOCATIONS
23.	Elec. Class	:	SEE ELECTRICAL
24.	Mounting	:	WALL OR PEDESTAL
25.	Process Connections	:	1/2 INCH NPT

Data Sheet 1451.1 (CONTINUED)

MATERIALS OF CONSTRUCTION

26.	Body	:	LOW COPPER ALUMINUM
27.	Wetted Parts	:	316 SS. FOR CORROSIVE CHEMICALS PROVIDE TANTALUM DIAPHRAGM AND TEFLON GASKETS AND HASTELLOY BODY, PROCESS FLANGE AND SENSOR WITH TEFLON GASKETS.
28.	Fill	:	SILICON OIL

SERVICE CONDITIONS

29.	Fluid	:	RAW WATER
30.	Specific Gravity	:	APPROX. 1.0
31.	Max. Static Pressure	:	SEE TABLE
32.	Operating Temp.	:	-20 TO 180 DEG. F. SEE NOTE d
33.	Ambient Temp.	:	0 TO 100 DEG. F.

MISCELLANEOUS

34.	Manifold Manufacturer	:	ANDERSON GREENWOOD, NOSHOK, PGI OR APPROVED EQUAL
35.	Manufacturer(s)	:	E+H, FOXBORO, SIEMENS, VEGA

NOTES.

a. Remote communication must not interfere with the analog output signal. Use frequency shift keying (FSK) technique for communication.

b. Provide standard manifold mounting bracket. Mount the manifold not the transmitter such that the transmitter may be removed for service by removing the four transmitter bolts and disconnecting the signal leads. Provide block/bleed/vent/drain and equal to AGCO M4TP.

c. Provide block/bleed/vent/drain equal to AGCO M4TP SS body , AMS SS mount and H5VIS-22 drain valve.

d. Provide 316 SS ½-inch rigid tubing for connection between process measurement primary and process transmitter/manifold. All tubing shall be cut and bent with tube manufacturer approved tools

e. Provide SS tubing connectors

PRESSURE GAUGE SPECIFICATION

DATA SHEET NO. 1454.1

GENERAL

1.	Tag Number	:	PI 10902, PI 10914, PI 10924, PI 10934
2.	Service	:	ENERGY DISSIPATION VAULT INFLUENT PRESSURE
3.	P & I D No.	:	10 DI-602
4.	Location	:	SEE MECHANICAL

GAUGE

5.	Type	:	GEARLESS DIRECT-DRIVE NON-LIQUID FILLED
6.	Element	:	HELICALLY WOUND BOURDON TUBE
7.	Element Material	:	INCONEL X-750
8.	Range	:	SEE TABLE
9.	Overpress. Limit	:	FULL VACUUM AND/OR 150% OF MAX RANGE
10.	Accuracy	:	± 0.5% AT MID SCALE
11.	Repeatability	:	± 0.025% FULL SCALE
12.	Zero Adjustment	:	EXTERNAL
13.	Span	:	FACTORY SET
14.	Linearity	:	FACTORY SET
15.	Shaft Attachment	:	DIRECT SENSING COIL AND POINTER
16.	Shaft Bearing	:	SYNTHETIC SAPPHIRE BOTH ENDS
17.	Fittings	:	316 SS OR AS REQUIRED BY PROCESS
18.	Joints	:	NICRO-BRAZED OR T.I.G. HELIARC WELDED
19.	Case Type	:	SWIVEL FITTING WITH MOVEABLE FLANGE
20.	Case Material	:	ABS PLASTIC
21.	Case Front	:	REAR BLOWOUT
22.	Dial Diameter	:	4-1/2 INCHES
23.	Socket Material	:	316 STAINLESS STEEL
24.	Process Connection	:	1/2 INCH NPT
25.	Lens	:	ACRYLIC
26.	Mounting	:	BACK SWIVEL FLANGE

PROCESS CONDITIONS

27.	Fluid	:	RAW WATER
28.	Pressure Range	:	0-200 psi
29.	Operating Temp	:	32-100°F

MISCELLANEOUS

30.	Diaphragm	:	NOT REQUIRED
31.	Snubber	:	PROVIDE INTERNAL TO STEM
32.	Pulsation Damper	:	INTERNAL TO STEM
33.	Manufacturer(s)	:	3D, PERMA-CAL OR EQUAL

NOTES.

a. Provide gauge assemblies with type 316L SS pipe and fittings, and a tee with ball valve with female outlet and arranged to allow field checking with a 4½-inch test gauge.
a. Provide all suction gauges as compound gauges 30" HG/0/30 psig
b. Provide gauge for non-sewage applications complete with factory-mounted protective diaphragm attachment which shall allow cleaning of lower diaphragm assembly without breaking seal or refilling and requiring no calibration of gauge.
c. Provide diaphragm of 316 SS with 316 SS upper and lower housing.
d. Provide 316L SCH 40 SS pipe and fittings
e. Provide 316 SS ball valves
f. Support all instruments on struts and racks. The contractor shall not use process piping or electrical conduit for supports.

ROOM/OUTSIDE AIR TEMPERATURE SENSOR SPECIFICATION

DATA SHEET NO. 1662.1

GENERAL

1.	Tag Number	:	SEE TABLE
2.	Service	:	SEE TABLE
3.	P & I D No.	:	SEE TABLE
4.	Location	:	SEE ELECTRICAL DRAWINGS
SENSOR			
5.	Type	:	PLATINUM RTD W/ ALUMINUM SENSING TIP
6.	Leads	:	3 LEADS FOR RTD
7.	Lead Wires	:	4-INCH LONG 22 AWG, PTFE INSULATED
8.	RTD Length	:	3-INCH MINIMUM
	OUTSIDE SENSOR		
9.	Housing	:	NEMA 4X W/ SUN SHIELD
10.	Material	:	CAST ALUMINUM
ROOM SENSOR			
11.	Housing	:	NEMA 4X
12.	Material	:	CAST ALUMINUM
TRANSMITTER			
13.	Type	:	ELECTRONIC
14.	Power	:	24 VDC
15.	Output Signal	:	4 - 20 mA DC INTO 550 OHMS
16.	Range	:	-45E TO 135EC (-50E TO 275EF)
17.	Linearity	:	+/- 0.1% WITH SPAN
18.	Calibration	:	MATCH RTD
19.	Enclosure	:	NEMA 4X
20.	Mounting	:	INTEGRAL WITH WELL
21.	Indicator	:	1-INCH HIGH LCD ±999.9
PROCESS CONDITIONS			
22.	Fluid	:	AIR
MISCELLANEOUS			
23.	Manufacturer(s)	:	MICON, WEED, PYROMATION

NOTES:

a. Provide complete temperature monitor assembly w/ all hardware for wall mounting.

TAG	SERVICE	P&ID
TIT 10952A	ENCLOSURE #1 TEMPERATURE	99 DI-601
TIT 10952B	ENCLOSURE #2 TEMPERATURE	99 DI-601
TIT 10952C	EDV CHAMBER TEMPERATURE	99 DI-601

END OF SECTION

SECTION 13310B

I&C CONTROL STRATEGIES

PART 1 – GENERAL

The Energy Dissipation Valve Chamber (EDVC) shall be controlled automatically via a PLC-based control panel. The new EDVC PLC will be integrated into the existing Water Treatment Plant (WTP) site SCADA system via fiberoptic network. Operator will be able to interface with the EDVC equipment via an operator interface terminal (OIT) mounted on the face of the PLC cabinet, as well as via the SCADA workstations at the existing WTP and the future new WTP.

The existing WTP will be upgraded in the future under a separate contract. These control strategies provide control modes for both when the EDVC is connected to the existing plant (Phase 1) and when it is connected to the new plant (Phase 2). While the existing WTP is operating, the EDVC PLC will be connected to the existing WTP via existing fiberoptic patch panel in the existing Watershed Building. When the new plant (currently under design) is online, the EDVC PLC will be connected to the new WTP SCADA system via fiber under the WTP upgrade contract.

Normally, the chamber will be run automatically with minimal need for operator intervention, as described in this document. All automatic functions are provided with manual controls for trouble shooting, maintenance, and operation during loss of a PLC. When the equipment is in Hand mode, control will take place at the local control panel. When the equipment is in Auto, the control will take place at the PLC /SCADA.

All programmable monitoring and alarm setpoints described herein shall be operator adjustable via the local OIT or SCADA HMI Workstations. For each monitoring instrument (flow meter, pressure transmitter, temperature transmitter, level transmitter, the PLC will generate an “Instrument Failure” signal upon loss of signal from the instrument. Alarm conditions for instruments and equipment shall be indicated at the HMI screen for the instrument/equipment as well as on the alarms screen. At the SCADA HMI, motor operated equipment shall be green when running and red when not running. Similarly, valves and gates shall be green when closed, red when open, and yellow when in travel.

For all valves and gates, SCADA shall generate a position disagreement alarm if the position control signal and position feedback signal are outside of an operator adjustable deadband.

Priorities for alarms listed herein shall be determined during coordination between the System Integrator and the Owner during construction. The SCADA program shall allow operator to change alarm priority, as necessary.

CONTROL STRATEGY NO. 1

I&C Loop Name:	Energy Dissipation Valve Chamber (EDVC) Flow and Pressure Monitoring
P&ID:	10 DI-602
I&C Loop Numbers:	90101, 90102
PLC/RIO:	EDV.CP-1
Equipment Location:	Energy Dissipation Valve Chamber Electrical Enclosure
Equipment Tag Nos.	FE/FIT 10901, PIT 10902
Objective:	Provides flow and pressure measurement of raw water coming from Cobble Mountain Reservoir into the EDVC.

Programmable Setpoints:

- Flow Setpoint
- High-High Flow (Alarm)
- High Flow –Two Valve Operation
- Low Flow - One Valve Operation
- Low-Low Flow (Alarm)
- High Pressure
- Low Pressure

Operation:

The signals from the flow and pressure instruments will be input into the PLC for indication, trending, totalization, accumulation, reporting, etc. High-High and low-low flow alarms will be generated from the measured flow signal. A high-high flow alarm corresponds with the maximum allowable flow into the EDV, hard programmed at 63MGD. An operator-adjustable low-low flow alarm will also be generated, initially set at 5MGD.

The flow meter will provide continuous flow and temperature monitoring. The flow meter will also provide pulse output for totalization at the PLC, a discrete contact indicating the flow exceeds a set threshold, and a discrete contact indicating power failure.

From the pressure transmitter, high and low pressure alarm will be generated from the measured signals. The high pressure alarm will be operator-adjustable between 200-220 psi, initially set at 220 psi. The low pressure alarm will be hard programmed at 125pi.

Local Indication:	The flow transmitter shall have a digital flow display. The pressure transmitter shall have a digital flow display.
Alarms:	The following alarm conditions shall be reported to the I&C SCADA system: • High-High Flow • Low-Low Flow • Flow instrument fail • High pressure • Low Pressure • Pressure instrument fail

CONTROL STRATEGY NO. 2

I&C Loop Name:	Isolation Valve Control and Monitoring
I&C Loop Numbers:	10911, 10921, 10931, 10912, 10922, 10932
PLC/RIO:	EDV.CP-1
Equipment Location:	EDVC
Equipment Tag Nos.	MOV-10911, MOV-10921, MOV-10931, MOV-10912, MOV-10922, MOV-10932
Objective:	Redundant isolation valves (one knife gate, one butterfly for each line), located upstream of the basket strainers, provide isolation of the train if the associated Mokveld valve fails or is offline for maintenance.
Programmable Setpoints:	Not Applicable
Operation:	Control of the isolation valves is manual. The PLC will monitor open and closed position status of each actuator.
Local Indication:	Position indication is provided at each of the valve actuators.
Alarms:	Not Applicable
Interlocks:	Not Applicable

CONTROL STRATEGY NO. 3

I&C Loop Name:	Basket Strainer Monitoring
P&ID:	10 DI-602
I&C Loop Numbers:	10913, 10923, 10933
PLC/RIO:	EDV.CP-1
Equipment Location:	EDVC
Equipment Tag Nos.	STR-10913, PDIT 10913, STR-10923, PDIT 10923, STR-10933 PDIT 10933

Programmable Setpoints

- High differential pressure
- High-high differential pressure

Objective/operation: Each basket strainer is equipped with a differential pressure transducer to measure the pressure loss across the strainer. High differential pressure indicates to the operator that the strainer needs to be cleaned, while high-high differential pressure indicates a critical need to clean the strainer. The high differential pressure alarm is operator-adjustable between 10-20 psid (initially set at 15 psid), and the high-high differential pressure alarm is operator adjustable between 20-30 psid (initially set at 25 psid).

Alarms: The following alarm conditions shall be reported to the SCADA system:

- High Differential Pressure
- High-high differential pressure

Interlocks: None

CONTROL STRATEGY NO. 4

I&C Loop Name: Energy Dissipation Valve Flow Control

P&ID: 10 DI-602

I&C Loop Numbers: 10914, 10924, 10934

PLC/RIO: EDV.CP-1

Equipment Location: EDVC

Equipment Tag Nos. FCV-10914, FCV-10924, FCV-10934

Objective: The Energy Dissipation Valves (EDVs) provide energy dissipation and control flow into the equalization tank. Two modes of operation will be provided for the EDVs – one mode for Phase 1 with the total flow to and through the EDVC and Equalization Tank (EQ), to the existing Sedimentation Basin and on to the existing WTP, and one mode for Phase 2 with the flow to the EDVC and Equalization Tank, through the 60-inch slide gate and 60-inch transmission pipeline to the new WTP.

Programmable Setpoints:

- High Flow out of EDV Structure
- High-High Flow out of EDV Structure
- High-high level in Sedimentation Basin
- High level in Sedimentation Basin
- Low level in Sedimentation Basin
- Low-low level in Sedimentation Basin

Phase 1 Operation:

Phase 1 operation will be implemented while the existing WTP facilities are online. During this phase, flow passes through the EDVC, to the EQ tank, over a weir to the existing sedimentation basin, and on to the existing WTP facility. The EDVs (tag FCV-10914, FCV-10924, FCV-10934) will operate to maintain a flow between 15 to 63 MGD and will operate in a lead/lag/standby manner to achieve the desired flow setpoint.

The operator at the existing WTP will select a desired flow rate from the Cobble Dam Reservoir via the SCADA HMI. The EDVs operate to maintain that same flow rate through the EDVC by modulating their position. The EDV structure upstream flow meter (FE/FIT 10901) will provide input to the flow control loop. For low flows down to 15MGD, one valve will operate. When the flow setpoint is increased, the lead EDV will open to achieve the desired flow setpoint as measured by the flow meter, and the lag and standby EDVs will remain closed. When the flow through the flow meter reaches a high flow setpoint (operator-adjustable, initially set at 32 MGD), the lag valve will begin to open. The lead valve will partially close to meet the lag EDV's position, and the two valves will modulate together to maintain the flow setpoint.

As the flow setpoint is reduced, the EDVs will continue to close together to achieve the desired setpoint. Once the measured flow reaches a low setpoint (operator-adjustable, initially set at 25 MGD), the lag valve will fully close and the lead EDV will independently achieve the flow setpoint down to 15MGD.

In the event one EDV fails, that valve will close, the next EDV in the call sequence (lag or standby) will operate.

A separate level control will include measurements of water level in the Sedimentation Basin. A control signal from the existing Sedimentation Basin level transducer located at the discharge of the 72-inch tunnel will signal the EDV to open or close, to maintain the basin level within a 12-inch band within the Sedimentation Basin.

Sampling of the level will occur every 2 hours. High -high, high, low, and low-low level alarms will be generated based on the measured level in the sedimentation basin. These alarm setpoints will be operator-adjustable, and elevations will be set at plant startup.

Also, high-high and low-low level alarms as defined in Control Strategy 5 will alert the operator that the level in the equalization basin are outside of the design deadband.

Phase 2 Operation:

Flow will be from the 42-inch transmission main, through the EDVC and Equalization Tank, through the proposed 60-inch transmission pipeline, to the inlet control structures of the new WPF WTP. Once the new WPF facilities are operational, flow will pass through the EDVs to the Equalization Tank, then through the new 60-inch pipeline to the new WTP. Flow control valves at the influent of the WTP will modulate to maintain an operator-adjustable plant influent flow rate. The high-level overflow weir in the EQ Tank will act as an emergency overflow to the sedimentation basin at elevation 501.0 The water level in the EQ Tank will provide sufficient hydraulic gradient to push flow through the 60-inch pipeline at flowrates of up to 63 MGD when levels range between 494 and 500 feet.

During Phase 2, the EDVs will continue to operate to control the flow between 15 MGD and 63 MGD. During this phase, the operator at the new WTP will select a desired flow rate to match the WTP influent flowrate. The EDVs will operate via the SCADA HMI to maintain that flowrate through the EDV(s) by modulating their position. EDVs will be incrementally positioned. The lead and lag EDV positions will also be trimmed to maintain EQ tank water level within a 12-inch dead band as measured by level transmitters (LE/LIT 10941, LE/LIT 10942) in the Equalization Tank. .

To trim the EDV(s), the EDV system PLC will compare the measured EQ tank level to the deadband levels at regular intervals (adjustable, initially set at 1 minute intervals). If the level reaches the upper end of the 12-inch deadband, the EDV(s) will close an operator-adjustable percentage (initially set at 1%). If the level is still at or above the high end of the deadband after the interval period, the EDV(s) will close another increment. Similarly, during periods of decreasing level, if the level reaches the low end of the 12-inch deadband, the EDV(s) will open an operator-adjustable percentage (initially set at 1%). If the level is still at or below the low end of the deadband after the interval period, the EDV(s) will open another increment.

The level setpoint will be operator-adjustable, initially set at elevation 498.0. When one EDV is in service, its position will modulate to achieve the required level setpoint in the equalization basin. As the level in the equalization tank increases, the EDV will reduce its percentage open to decrease flow, and as the level decreases, the EDV will increase its position to increase flow. When the level reaches an operator-adjustable low level setpoint (initially set at elevation 496.0), the lag EDV will begin to open. The lead and lag valves will reach the same position and work together to maintain a level setpoint of elevation 498.0. With the lead and lag EDVs in operation, if the level in the equalization basin increases to an operator-adjustable high level setpoint (initially set at elevation 499.0), the lag valve will fully close and the lead EDV will work independently to maintain the initial setpoint level of elevation 498.0. High-high and low-low level alarms as defined in Control Strategy 5 will alert the operator that the level in the equalization basin is outside of the design deadband.

Phase 2 Flow Control Mode

Normally during Phase 2, EDV operation will be water-level based to maintain the level in the equalization tank as described above. During periods of maximum demands, the system will automatically switch to flow limiting mode. When the flow through the EDV structure upstream flow meter (FE/FIT 10901) reaches an operator-adjustable high-high flow setpoint (initially set at 63mgd but not to exceed 63MGD), the system will automatically initiate flow limiting mode. In this mode, the EDVs will work to hold that flow value, and the level in the EQ tank will no longer be used for control (but will continue to be monitored). If the water level in the EQ tank drops to elevation 492.0 an alarm will be generated to alert operators that the flow out of the EQ tank has exceeded 63MGD. Alternately, when the water level in the EQ tank rises above an operator-adjustable level setpoint (initially set at elevation 498.0), the valves will automatically resume flow control mode and modulate to maintain the level setpoint in the Equalization Tank.

EDV Startup:

The 42-inch pipeline is to be filled completely before opening EDVs or isolation valves. Only after pipeline is confirmed to be filled, and air evacuated, can the EDVs be placed into operation.

For Phase 1 operation with flow directly to the Sedimentation Basin and existing WTP, and only after the 42-inch pipeline is filled, the proposed SCADA equipment and signals to the EDV controllers will

then adjust the EDV valve(s) positioner to maintain a set operations flowrate measured by the upstream flow meter (FE/FIT 10901).

For Phase 2 operation with flow to the proposed 60-inch pipeline and proposed WTP, and only after the 42-inch pipeline is filled, the proposed SCADA equipment and signals to the EDV controllers will then adjust the EDV valve(s) positioner to modulate flow in order to maintain a flowrate set to the WTP influent flowrate.

EDV Operation General: The following is applicable for all control modes

If network communication is lost, the valves will hold their last position until an operator intervenes to manually close valves.

A maximum rate of change for the WTP influent flow control valves will be established by the WTP designers so that operators cannot change the flowrate to the WTP more rapidly than the rate-of-change of the installed EDVs. Influent flowrate rate-of change at the new WTP must be controlled not to exceed the flowrate rate-of-change of the EDVs, either opening or closing. Total flow to the EQ Tank will be limited to 63 MGD when two valves are operational, and 35 MGD when one valve is operational. Additionally, the opening and closing duration for each EDV will be set at three (3) minutes and EDV operators will be manufactured with this established opening/closing time. Flow setpoints will be adjustable for plant personnel with appropriate credentials only.

The valves will operate in a lead/lag/standby manner. After each operational cycle, or after an operator-adjustable time period of use, the valves will alternate their lead/lag/standby designation. The valves will alternate such that each receives approximately equal time in each role. The operator may remove any valve from the alternation sequence if desired.

The position of each valve will be continuously displayed on the SCADA HMI. The HMI will also indicate if the valve is changing position. An HMI screen will be provided to display real-time trending of the flow rate into the EDVC vs. plant influent flow rate, vs. Sedimentation Basin or Equalization Tank level (for Phase 1 or 2, respectively).

Local Indication: The valve actuators will be provided with Local/Remote switches as well as Open/Stop/Close switches for local control and maintenance.

Alarms:	The following alarm conditions shall be reported to the I&C SCADA system: • Valve Fail • High-high Sedimentation Basin Level (Phase 1) • Low-low Sedimentation Basin Level (Phase 1)
Interlocks:	None

CONTROL STRATEGY NO. 5

I&C Loop Name:	Equalization Tank Level Monitoring
P&ID:	10 DI-602
I&C Loop Numbers:	10941, 10942
PLC/RIO:	EDV.CP-1
Equipment Location:	Equalization Tank
Equipment Tag Nos.	LE/LIT 10941, LE/LIT 10942
Objective	Redundant Level Transducers monitor the level in the equalization tank.
Programmable Setpoints:	Level • Level Target • High Level • High-High Level (Alarm) • Low Level • Low-Low Level (Alarm)
Operation:	Provide continuous level of the equalization Tank via radar level transducers. The transducers will be assigned duty and standby status at the PLC OIT or SCADA HMI. The duty transmitter will provide feedback to the Phase 2 level control ass described above. An alarm will be generated if the difference between the two measured values exceeds an operator-adjustable value. If the duty level transmitter fails (PLC loses its signal), the standby transmitter will automatically transition to duty.

	The high and low level setpoints are described under Phase 2 Operation in Control Strategy 4, and the equalization tank level will remain within this deadband when operating normally. Alarms will be generated based on the measured level signal when the level deviates from the normal operational deadband. The high-high alarm will be generated at 6 inches above the operational deadband (high level setpoint), and the low-low alarm will be generated at 6 inches below the operational deadband (low level setpoint)
Local Controls/ Status:	Level transmitters will provide local indication. The gate actuator will be provided with a Local/Remote switch as well as an Open/Stop/Close switch for local control and maintenance.
Alarms:	The following alarm conditions shall be reported to the SCADA system: • High-high level • Low-Low level • High deviation between two level measurements
Interlocks:	None

CONTROL STRATEGY NO. 6

I&C Loop Name:	Equalization Tank Slide Gate Control
P&ID:	10 DI-602
I&C Loop Numbers:	10943
PLC/RIO:	EDV.CP-1
Equipment Location:	Equalization Tank
Equipment Tag Nos.	SLG-10943
Objective	Position of the slide gate to the new plant is controlled via a motorized actuator.
Programmable Setpoints:	N/A
Operation:	During Phase 1 (see Control Strategy No. 4), the gate will be closed since the 60-inch pipeline it is connected to will not be in service. During Phase 2, the gate will be normally open to allow flow to the new treatment plant. If operators need to close the gate to isolate the

	EDVC and equalization tank from the 60-inch pipeline, they can do so via the SCADA workstations, PLC OIT, or manually at the actuator. All control of the gate, both local and remote, is manual.
Local Controls/ Status:	The gate actuator will be provided with a Local/Remote switch as well as an Open/Stop/Close switch for local control and maintenance.
Alarms:	The following alarm conditions shall be reported to the SCADA system: • High Torque
Interlocks:	None

CONTROL STRATEGY NO. 7

I&C Loop Name:	PLC UPS Monitoring
P&ID:	99 DI-601
I&C Loop Numbers:	10951
PLC/RIO:	EDV.CP-1
Equipment Location:	Electrical Enclosure
Equipment Tag Nos.	PLC-UPS
Objective	Monitor the status of the UPS.
Programmable Setpoints:	N/A
Operation:	Monitor Fault, On, and Bypass status of the UPS.
Local Controls/ Status:	Local indication of UPS status is provided on the UPS.
Alarms:	The following alarm conditions shall be reported to the SCADA system: • UPS Fault • UPS On • UPS in Bypass Mode
Interlocks:	None

CONTROL STRATEGY NO. 8

I&C Loop Name:	Electrical Enclosure and EDV Chamber Temperature Monitoring
P&ID:	99 DI-601
I&C Loop Numbers:	10952
PLC/RIO:	EDV.CP-1
Equipment Location:	Electrical Enclosure, EDV Chamber
Equipment Tag Nos.	TIT 10952A, TIT 10952B, TIT 10952C
Objective	Monitor the air temperature of the respective location
Programmable Setpoints:	High Temperature, Low Temperature
Operation:	Continuously monitor the temperature on each side of the Electrical Enclosure as well as within the EDV Chamber. Send an alarm to the PLC on high or low temperature from either transmitter.
Local Controls/ Status:	Temperature indication will be available at the temperature transmitter.
Alarms:	The following alarm conditions shall be reported to the SCADA system: • High Temperature • Low Temperature
Interlocks:	None

CONTROL STRATEGY NO. 9

I&C Loop Name:	Duplex Sump Pump Monitoring
P&ID:	99 DI-601
I&C Loop Numbers:	10953, 10954
PLC/RIO:	EDV.CP-1
Equipment Location:	EDV Chamber

Equipment Tag Nos.	P-10953A, P10953B, P10953-CP
Objective	Monitor the operation of the sump pump.
Programmable Setpoints:	N/A
Operation:	Sump pumps in the EDV Chamber will be operated automatically based on the level in their respective area. Pump running and fault statuses for each pump as well as high level status in the sump will be monitored at the PLC.
Local Controls/ Status:	The duplex pump control panel will be provided with a start/stop switch for local control and fault and running indicating lights.
Alarms:	The following alarm conditions shall be reported to the SCADA system: • Pump Running • Pump Fault • High Sump Level
Interlocks:	None

CONTROL STRATEGY NO. 10

I&C Loop Name:	CCTV System Status Monitoring
P&ID:	99 DI-601
I&C Loop Numbers:	10954
PLC/RIO:	EDV.CP-1
Equipment Location:	Electrical Enclosure
Equipment Tag Nos.	CCTV-CP
Objective	Monitor the status of the CCTV System.
Programmable Setpoints:	N/A
Operation:	Monitor fault status of the CCTV system

Local Controls/ Status:	Local indication of system is provided at the CCTV Control Panel.
Alarms:	The following alarm conditions shall be reported to the SCADA system: • System Fault
Interlocks:	None

CONTROL STRATEGY NO. 11

I&C Loop Name:	Intrusion Monitoring, Hatch and Electrical Enclosure
P&ID:	99 DI-601
I&C Loop Numbers:	10955
PLC/RIO:	EDV.CP-1
Equipment Location:	EDV Chamber
Equipment Tag Nos.	ZSO 10955A, ZSO 10955B, ZSO 10955C, ZSO 10955D, ZSO 10955E
Objective	Monitor the position of the EDV Chamber hatches and Electrical Enclosure doors.
Programmable Setpoints:	N/A
Operation:	Generate alarm when the EDV Chamber hatch or and Electrical Enclosure door is opened.
Local Controls/ Status:	N/A
Alarms:	The following alarm conditions shall be reported to the SCADA system: • Intrusion Detected
Interlocks:	None

CONTROL STRATEGY NO. 12

I&C Loop Name:	Chlorine Gas Horn/Strobe
P&ID:	99 DI-601
I&C Loop Numbers:	10956

PLC/RIO:	EDV.CP-1
Equipment Location:	EDV Chamber Electrical Enclosure
Equipment Tag Nos.	N/A
Objective	Alarm on high chlorine gas measured at the WTP.
Programmable Setpoints:	N/A
Operation:	Existing SCADA generates an alarm on high gas from the existing chlorine gas detection system at the existing WTP. The high chlorine gas alarm is transmitted via SCADA and activates the horn and strobe at the Energy Dissipation Vault Chamber Electrical Enclosure.
Local Controls/ Status:	N/A
Alarms:	The following alarm conditions shall be reported to the SCADA system: • N/A
Interlocks:	None

SECTION 13420

ULTRASONIC FLOWMETER

PART 1 - GENERAL

1.01 SCOPE:

A. Furnish ultrasonic flowmeter system to monitor the flow in the pipeline at the Energy Dissipating Valve (EDV) Chamber. The flowmeter system shall consist of ultrasonic transducers, coaxial cables, and a surface mounted console enclosure complete and in accordance with these specifications. All accessories required for satisfactory operation of the flowmeter shall be furnished.

B. Provide the services of the flowmeter manufacturer to align, drill, and install the transducer feed-through assemblies in the flow meter section shown on the drawings preferably at the pipeline manufacturer's facility.

C. Furnish detailed step by step procedures for installation of the flowmeter transducers. Such procedures will contain required hold points to allow for installation inspection and acceptance of the flowmeter transducer section of the pipeline.

D. This Section includes the following:

1. Ultrasonic transducers and feed through assemblies

2. Flowmeter console

3. Transducer signal cables

1.02 REFERENCES:

A. American Society of Mechanical Engineers (ASME)

B. International Electrotechnical Commission (IEC)

C. The Instrumentation, Systems and Automation Society (ISA)

D. National Fire Protection Association (NFPA)

E. National Electrical Code (NEC)

F. National Electrical Manufacturers' Association (NEMA)

G. Underwriters Laboratories (UL)

1.03 SUBMITTALS

A. Submit manufacturer's catalog data, specifications, and installation instructions in accordance with this Section and Section 16050, Electrical General Provisions.

B. Submit Operation and Maintenance manuals containing installation instructions, calibration instructions, and operation instructions in accordance with this Section at least 30 days prior to delivery of any equipment to the site.

C. Provide a two-year written guarantee from the date of acceptance of the flowmeter to guarantee that the flowmeter transducers, console, and all accessories shall perform as stated in these specifications. There shall be no defects in material or workmanship in any items supplied. Replace, at no cost to the OWNER, any items furnished which fail to perform as specified.

1.04 OPERATING CONDITIONS:

A. The operating conditions for the ultrasonic flowmeter system equipment shall be as follows:

1. The flowmeter console shall operate with the multiple path ultrasonic transducer assemblies installed on the 42-inch (outside diameter) steel pipeline.

2. Flow range 0 - 100 ft^3/sec

3. Length of available constant dimension straight pipeline upstream of the transducers 10 diameters

4. Length of available constant dimension straight pipeline downstream of the transducers 2 diameters

4. The approximate distance between the pipeline transducers and flowmeter console 25 feet

5. The measured water may contain negligible to small amounts of silt and may carry entrained organic material.

6. The flowmeter console equipment shall operate satisfactorily between ambient temperatures of -4 º to 110 ° F and 0 to 95% relative humidity.

7. Transducers shall operate satisfactorily between temperature limits of 32 degrees F to 122 degrees F.

1.05 WARRANTY

A. Comply with the requirements specified in Section 01740.

B. Furnish a 2-year warranty from the date of substantial completion for all equipment covered in this section.

C. There shall be no defects in material or workmanship in any items supplied.

D. The Contractor shall replace, at no cost to the Owner, any item the Contractor furnishes which fails to perform as specified during the warranty period.

PART 2 - PRODUCTS

2.01 GENERAL:

A. The ultrasonic flowmeter system shall be of the 4-path single plane acoustic transit time measurement type mounted in the pipeline in a 4-path single plane configuration which shall measure the flow by transmitting acoustic pulses between pairs of transducers mounted on the pipeline.

B. The ultrasonic flowmeter system equipment to be furnished shall include the following components:

1. Eight feed through assemblies for mounting the transducers.

2. Eight ultrasonic transducers.

3. One flowmeter console, NEMA 4X cabinet, LCD display, hand-held alphanumeric keyboard, heater, terminal blocks, ground bus, 1GB internal non-volatile storage, I/O equipment, RS-232 interface, RS-485 Modbus interface, and Windows based PC interface flow measurement and diagnostic software.

4. Signal cable for connecting the transducer output signal to the flowmeter console.

C. The flowmeter console shall be suitable for surface mounting in the EDV Chamber.

D. The flowmeter transducers and flowmeter console shall be supplied by the same manufacturer. Acceptable manufacturers are:

1. Accusonic Technologies – Model 7601/7641 Transducer

2. Brugg Rittmeyer AG – Risonic Transducer

3. Or approved equal.

2.02 FLOWMETER:

A. The transducers will be located in the 42-inch steel pipeline upstream from the pipeline manifold as shown on the drawings.

B. A minimum of 4 chordal acoustic paths configured in a single plane configuration shall be provided for measuring velocity in the pipeline.

C. Flow rate shall be calculated by integrating the velocities measured on all flow paths. Flow rate shall be displayed in cubic feet per second (cfs) and million gallons per day (MGD). All flow information shall be indicated on the flowmeter console LCD display, and externally available in both digital and analog 4-20 mA electrical signal formats.

D. The error in the flow rate indication and totalizing shall not exceed ±0.5 percent for full pipeline when the velocity in the pipeline is greater than 1 ft/sec velocity.

E. The accuracy and operation of the flow meter shall be independent of the coefficient of fluid friction in the conduit and of the values of the physical and chemical properties of the water. The methods of measuring and computing water velocity shall be independent of water temperature or any other factor affecting the speed of sound in water.

F. The flowmeter console and transducers shall be manufactured by the same supplier.

G. The flowmeter console shall be capable of monitoring its internal critical operating functions and outputting alarm signals indicating a problem or fault with the flowmeter operation.

2.03 TRANSDUCER ASSEMBLIES:

A. The transducer assemblies shall consist of pairs of transducers, each housed in feed-through assemblies mounted around the pipeline.

B. The feed-through assemblies shall be of the type suitable for installation through the pipeline walls without welding.

C. The transducers will have integral waterproof signal cable connectors.

D. The transducers shall be capable of being removed and reinstalled from the pipeline using the feed through assembly under zero pounds (0 lbs) pipeline pressure using a manufacturer furnished extractor tool.

2.04 FLOWMETER CONSOLE:

A. The flowmeter console shall consist of all circuitry and logic as required to measure flow rate and provide various outputs for flow rate and totalized flow.

B. The flowmeter console shall receive the data and determine the volumetric flow rate in cubic feet per second (ft^3/sec) and MGD through the pipeline. The console shall display flow rate and/or totalized flow and shall have four (4)-isolated 4-20 mA analog outputs, one (1) RS-485 Modbus Slave output, and four (4) alarm relays.

C. The flowmeter console shall evaluate each acoustic signal and reject any signal distorted by reflection or amplitude. The flowmeter console shall perform signal diagnostics for travel

times, sonic velocity, gains, SNR (signal to noise ratio), and provide appropriate error messages.

D. The flowmeter console shall have the following minimum features:

1. Flow Rate Indication. The console shall have an LCD digital display. The LCD shall display flow rate in ft^3/sec and MGD. Transducer operational status shall be displayed.

2. Analog Output. A minimum of 2 analog outputs shall be provided. The analog outputs shall have 12 bit resolution, minimum and drive a 750 ohm load. The analog outputs shall be programmed: at the factory as follows:

   a. One 4-20 mA DC isolated output shall be programmed for the average path volumetric flow rate in ft^3/sec.

   b. One 4-20 mA DC isolated output shall be programmed for the pipeline water temperature, in degrees F.

3. Serial Outputs. Provide serial digital outputs as follows:

   a. Two RS-232 ports

   b. One RS-485 Modbus Slave port

4. One hand-held program/display terminal.

5. Relay Outputs. The following relays shall be provided. These relay outputs shall be available on an easily accessible terminal block mounted inside the flowmeter console cabinet. The relay contacts shall be rated 24 VDC, 5.0 A, minimum. The output relays shall be programmed to provide the following remote indications:

   a. Sum of section flow exceeds threshold

   b. Section good/power failure indication

   c. Flow Totalizer pulse for sum of sections

6. On-line Diagnostics

   a. A diagnostic program shall be provided to identify any error occurring during the self-test or normal system operation. The system shall continuously check operational and computational accuracies. The rejected data shall not be used in the volume flow rate computation and the system shall zero if failure persists beyond a user-selectable time. The flowmeter manufacturer shall set the initial number of path measurements needed to establish valid measurements.

b. At the user selection, a display screen shall be available that allows the user to view the diagnostics output in real-time. The diagnostics shall provide a display of alarms, malfunctions and operation as well as power failures.

7. The flowmeter console shall operate in the temperature range of -4 to 110 degrees F, and 0 to 95% humidity.

2.05 CABINET:

A. The console cabinet shall be suitable for surface wall-mounting.

B. The cabinet shall be a NEMA 4X (IP 66) sealed enclosure.

C. The cabinet shall be equipped with a hinged door and a glass or plexiglass window through which the LCD display can be read.

2.06 FLOWMETER CABLE:

A. The CONTRACTOR shall furnish all cables as required between the transducers and the flowmeter cabinet.

B. The exact length of transducer cables shall be determined based on the location of the transducers on the pipeline as shown on the drawings. The transducer signal cables shall be supplied in one continuous length from the transducers to the console with no splices.

C. The signal cables shall be terminated with waterproof plug-in connectors at the transducer locution and on terminal blocks within the flowmeter console cabinet.

D. The type of flowmeter transducer signal cable shall be furnished in accordance with the manufacturer's instructions.

2.07 POWER INTERRUPTION:

A. Restoration of power following a power interruption shall return the flowmeter to full operation without operator intervention.

PART 3 - EXECUTION

3.01 INSTALLATION:

A. Provide installation supervision, calibrating, and adjusting the flowmeter system for satisfactory operation.

B. The flowmeter console will be located in the EDV Chamber.

C. Coordinate all installation supervision and testing of the flowmeter equipment directly with the flowmeter manufacturer and shall be responsible for supplying the services of qualified representatives who are employees of the flowmeter manufacturer.

D. The flowmeter console installation, including transducer signal wiring, shall be inspected by the flowmeter manufacturer's representative to determine if the installation is acceptable and complete.

E. Manufacturer shall provide a Certificate of Proper Installation (COPI) to CONTRACTOR and OWNER after installation and satisfactory testing has been performed.

3.02 TESTING FLOWMETERING EQUIPMENT FOR ACCEPTANCE:

A. The CONTRACTOR shall be responsible, under the direction of the flowmeter manufacturer's representative, for the initial start-up testing, and transducer alignment or any other work which must be performed to demonstrate that the flow metering equipment is operating correctly and to the satisfaction of the OWNER.

B. If any of the flowmeter console or transducer signal wiring is found to be malfunctioning and is not in working order, the CONTRACTOR shall be responsible for the repair of the equipment which may be required as a result of these malfunctions.

C. If any of the CONTRACTOR-furnished flow metering equipment is abused, misused, or not handled correctly during manufacture or delivery resulting in damage to the electronics, the cabinet, or any other components making up the flow metering equipment, the CONTRACTOR shall be responsible for any and all costs incurred to repair the equipment. In addition, the CONTRACTOR shall make arrangements with the flowmeter manufacturer to make these repairs immediately after the damage is discovered. All repairs and re-work performed shall be inspected and approved by manufacturer's representative.

D. The CONTRACTOR shall be responsible for making available during the testing of the flowmeter system a factory-trained, qualified field test technician or engineer who is a representative of the flowmeter manufacturer. This individual will be made available during the initial start-up of the equipment and shall remain at the site until the flowmeter system has been accepted as meeting the Manufacturer's and these specifications and requirements for this system.

3.03 TESTS:

A. The flowmeter shall be tested for satisfactory operation in accordance with the requirements of these specifications. A certified performance test, a 72-hour "continuous burn-in" test described below shall be performed on the flowmeter.

B. Certified test data from an independent laboratory or from a previously installed field operation shall be submitted which conclusively demonstrates the ultrasonic flowmeter's operating and performance characteristics throughout the flow ranges are within the levels of accuracy required of the installation for which these specifications are written. In

addition, test submittals shall verify that the above tests have been conducted under the following minimal conditions:

1. The pipeline outside diameter at the transducer location will be no less than 42 inches.

C. A 72-hour "continuous burn-in" test without malfunction shall be performed on the flowmeters. This test shall be performed in the field. The successful completion of this test shall demonstrate to the OWNER that the flowmeter operates properly and reliably in the specified operating conditions. The test shall be witnessed by the manufacturer's representative. The CONTRACTOR shall schedule, perform, and submit a test report.

D. Flowmeter Simulated Tests

1. The flowmeter shall be tested for flows of 25, 50, 75, and 100 percent of the flow range. In addition to checking the display for proper flow readings, each analog, alarm relay, totalizer relay, and status outputs shall be checked for proper operation.

2. The CONTRACTOR shall furnish all test equipment and additional hardware necessary for the complete performance of the test. If the flowmeter equipment fails to meet the specified operating requirements or the measured quantities indicate inconsistencies, the CONTRACTOR shall immediately initiate the appropriate correction and/or adjustment to the equipment to correct the deficiencies.

END OF SECTION

SECTION 14370

FREESTANDING BRIDGE CRANES AND APPURTENANCES

PART 1 - GENERAL

1.01 DESCRIPTION:

A. Provide and test freestanding bridge cranes, support structure, baseplate and anchoring, hoists, motors, gear reducers, controls and appurtenances as indicated and in compliance with Contract Documents.

1. Hoist capacities and operating data are indicated in the Bridge Crane Schedule on the drawings.

1.02 REFERENCES:

A. American Bearing Manufacturers Association (ABMA):

1. -9:2015: Load Ratings and Fatigue Life for Ball Bearings.

2. -11-2014 (R2020) : Load Ratings and Fatigue Life for Roller Bearings.

B. AGMA Standard for Gears.

C. ASME B30.2-2022 “Safety Standard for Overhead and Gantry Cranes (Top Running Bridge, Single or Multiple Girder, Top Running Trolley Hoist).”

D. ANSI/ASME HST-4-2021 Performance Standards for Overhead Electric Wire Rope Hoists

E. American Society of Mechanical Engineers (ASME):

1. B30.16-2022: Overhead Underhung and Stationary Hoists Safety Standard for Cableways, Cranes, Derricks, Hoists, Hooks, Jacks, and Slings.

2. B30.2-2022: Overhead and Gantry Cranes (Top Running Bridge, Single or Multiple Girder, Top Running Trolley Hoist).

3. B30.17-2020: Cranes and Monorails (With Underhung Trolley or Bridge)

F. American Welding Society (AWS):

1. D1.1/D1.1M:2020: Structural Welding Code – Steel

G. Hoist Manufacturers Institute (HMI):

1. 100-1974: Electric Wire Rope Hoists

H. National Electric Code (NEC):

1. 610: Cranes and Hoists

I. National Electrical Manufacturers Association (NEMA):

1. MG 1-2021: Motors and Generators.

J. Occupational Safety and Hazard Association (OSHA):

1. 29 CFR 1910.179: Overhead and Gantry Cranes.

K. Crane Manufacturers Association of America (CMAA):

1. 70-2020: Specification for Top Running Bridge and Gantry Type Multiple Girder Electric Overhead Traveling Cranes.

2. 74-2020: Specification for Top Running and Under Running Single Girder Electric Overhead Cranes Utilizing Under Running Trolley Hoist.

1.03 SUBMITTALS:

A. Submit the following shop drawings in accordance with Section 01300. Have the shop drawings sealed and signed by a professional engineer registered in the State of Massachusetts.

1. Certified setting plans, with tolerances, for anchor bolts.

2. Manufacturer's literature as needed to supplement certified data.

3. Operating and maintenance instructions and parts lists.

4. Listing of reference installations as specified with contact names and telephone numbers.

5. List of recommended spare parts other than those specified.

6. Shop and field inspection reports.

7. Motor shop test results.

8. Qualifications of field service engineer.

9. Recommendations for short and long-term storage.

10. Shop and field testing procedures, equipment to be used.

11. Special tools.

12. Number of service person-days provided and per diem field service rate.

13. Manufacturer's product data, specifications and color charts for shop painting.

14. The latest ISO 9001 series certification.

15. Provide sealed drawing height and weight of equipment serviced by the hoisting equipment including hook height and travel dimensions. Provide sealed drawings and calculations, including for anchoring design and details to the EDV Chamber roof.

16. Material Certification:

    a. Provide certification from the equipment manufacturer that the materials of construction specified are recommended and designed for the service conditions specified and indicated. If materials other than those specified are proposed based on incompatibility with the service conditions, provide technical data and certification that the proposed materials are recommended and designed for the service conditions specified and indicated including an installation list of a minimum of five (5) installations in operation for a minimum of five (5) years. Provide proposed materials at no additional cost to the Owner.

    b. Where materials are not specified, provide technical data and certification that the proposed materials are recommended and designed for the service conditions specified and indicated.

B. Submit certifications for the engineering design, for the manufacturing and testing prior to shipment to the Site. Submit certifications for the commissioned crane after installation, field testing and commissioning. Have the certifications sealed by a professional engineer registered in the State of Massachusetts.

C. Drawings shall reflect actual field conditions where possible. As a minimum, all dimensioned drawings shall be based on the dimensions shown in the Contract Drawings.

1.04 SPARE PARTS:

A. Comply with the requirements specified in Section 01600.

B. Provide spare parts that are identical to and interchangeable with similar parts installed.

1.05 HOIST DESIGN CRITERIA

A. The design of the hoists and accessories shall conform to the latest practice for equipment of that class. Except as otherwise specified in the Contract Documents, the design of all parts and accessories shall meet the requirements of the latest issue of Standard Specifications HMl 100-74, published by the Hoist Manufacturer's Institute.

Electrical equipment shall be in accordance with applicable standards of ANSI, IEEE, or NEMA.

B. The design of the hoists shall be such that all movements take place smoothly and positively. No slipping of load shall take place at any time.

1.06 CRANE BRIDGE AND ACCESSORIES DESIGN CRITERIA

A. The design of the crane bridge and accessories shall conform to the latest practice of equipment of that class. Except as otherwise specified in the Contract Documents, the design of all parts of the crane shall meet the requirements of the latest issue of CMAA Specification No. 70. Electrical equipment shall be in accordance with Electrical Codes and applicable standards of ANSI, IEEE, or NEMA.

B. The design of the crane shall be such that all movements take place smoothly and positively.

C. Mechanical parts of the bridge drive shall be designed with a minimum safety factor of five based on the ultimate strength of the material used under "rated capacity" conditions, and increased where good practice so demands. The bridge girders shall be designed in accordance with CMAA 70-2020 Specification for Top Running Bridge and Gantry Type Multiple Girder Electric Overhead Traveling Cranes.

D. The design of the bridge and end trucks shall take into account the lateral stresses due to starting and stopping and cranes under all conditions of loading. The bridge girders shall be rigidly connected to the end trucks and shall be suitably braced to keep the girders square with the trucks at all times. The maximum girder deflection under rated load conditions shall not exceed 0.001 of the crane span.

1.07 QUALITY ASSURANCE:

A. Comply with the requirements specified in Section 01400.

B. Overhead bridge cranes to be in conformance with CMAA Specification No. 74 and as specified and indicated.

C. Permanently mark the capacity of the hoist and trolley on each hoist and crane, in easy to read letters and in a prominent position.

D. Provide only safety type hooks.

E. Provide hoists so that hook can reach the bottom floor elevation of the EDV Chamber at the lowest level of the lift.

F. Do not use bridge crane for construction purposes of any nature.

G. Cranes shall be manufacturer's standard cataloged product and modified to provide compliance with the drawings, specifications, and the service conditions specified and indicated.

H. Welding: In accordance with American Welding Society Code D1.1/D1.1M.

I. Provide shop tests as specified.

J. Crane manufacturer shall provide beams, hoists, motors, gear reducers, switches, and controls regardless of manufacturer as a complete integrated package to ensure coordination, compatibility, and operation of the systems.

K. Services of Manufacturer's Representative as stated in Section 01400 and as specified herein.

L. Provide services of factory-trained Service Technician, specifically trained on type of equipment specified:

1. Service Technician must be present on site for all items listed below. Person-day requirements listed are exclusive of travel time, and do not relieve Contractor of the obligation to place equipment in operation as specified.

2. Installation: Inspect grouting, location of anchor bolts; setting, leveling, alignment, field erection; coordination of piping and electrical:

   a. [2] person-days.

3. Functional Testing: Calibrate, check alignment and perform a functional test. Tests to include all items specified.

   a. [2] person-days.

4. Performance Testing: Field performance test equipment specified.

   a. [2] person-days.

5. Vendor Training: Provide classroom and field operation and maintenance instruction including all materials, slides, videos, handouts, and preparation to lead and teach classroom sessions.

   a. [1] person-days.

6. Credit to the Owner, all unused service person-days specified above, at the manufacturer’s published field service rate.

7. Any additional time required of the factory trained service technician to assist in placing the equipment in operation, or testing or to correct deficiencies in installation, equipment or material shall be provided at no additional cost to the Owner.

M. Crane manufacturer shall have a minimum of five (5) operating installations with cranes of the size specified and in the same service as specified operating for not less than five (5) years.

1.08 DELIVERY, STORAGE AND HANDLING:

A. Comply with the requirements specified in Section 01610.

PART 2 - PRODUCTS

2.01 SYSTEM DESCRIPTION:

A. Crane capacities and operating data are indicated in the Bridge Crane Schedule on the drawings.

B. Bridge crane shall be rated for outdoor use. Outdoor features shall include, but not be limited to, epoxy paint coating on the crane and structure, NEMA 4X Enclosures with panel heaters for the hoist and bridge, motor strip heaters, weather shields, and synthetic lubricant.

2.02 CRANE MANUFACTURERS:

A. LK Goodwin Company.

B. EMH Cranes.

C. American Crane & Equipment.

D. Mass Crane & Hoist.

E. Dearborn Overhead Crane.

2.03 SEISMIC DESIGN REQUIREMENTS:

A. Conform to the requirements indicated on the structural drawings and as specified in Section.

B. The Contractor shall conform to the seismic design requirements for this project and for the work of this specification section.

C. Provide all equipment bases, anchorage, supports and foundations designed in accordance with the seismic requirements indicated and specified.

D. Provide certification for all equipment signed by a registered structural engineer stating that computations were performed and that all components have been sized for the seismic forces specified and indicated.

2.04 BRIDGE:

A. Top running type crane bridge as indicated in the Bridge Crane Schedule on the drawings.

B. Provide a top running (low profile) type bridge crane (single girder) as indicated in the Bridge Crane Schedule on the drawings.

1. Provide top running cranes designed to resist all vertical, lateral and torsional forces combined as specified in CMAA-70 and 74.

C. Provide girders connected with end trucks.

D. Provide connections in both vertical and horizontal planes to keep entire bridge structure square and aligned under conditions specified and indicated and during shipping and installation.

E. Bridge and truck: Welded steel construction. Provide rigid structure and trucks attached to bridge girders with turned bolts.

F. Provide bridge with holes drilled and reamed for matched fit before final assembly and welding.

G. End trucks: minimum wheel base 1/8 of crane span.

1. Provide bridge trucks with ball or roller bearings and medium or high carbon steel or high strength alloy steel fixed or rotating type steel axles.

2. Provide trucks to prevent drop in excess of 1-inch in the event of wheel or axle failure.

3. Provide entire truck machine as a factory assembled unit to provide perfect alignment.

H. Truck Wheels: double flanged rolled bridge type forged or cast steel with hardened treads.

1. Wheels to carry maximum wheel load under normal operating conditions. Diameter not less than that shown for maximum load in CMMA-74.

I. Provide driving mechanism such that travel will be steady and free from vibration or racking in any part of structure while traveling under maximum load at all speeds. Prevent any tendency for crane structure to get out of line while traveling along runway under any operating condition.

2.05 ELECTRIC HOISTS:

A. Electric Hoists: Spur-gear driven antifriction bearings throughout. Provide a load side holding hoist motor brake and a separate electrically operated non-load brake. Design

brake with capability of supporting the full load at any point when the motor is stopped. Holding brake shall be externally adjustable, electrically operated friction disk brake that shall apply automatically when the power is off. The brake shall hold 150 percent of the rated load and 125 percent of the rated load at any operating speed. Design shafts of motor, drum, and drum pinion to run in grease-lubricated ball or roller bearings. Design the hoist, gear train and bearings to be oil-bath lubricated.

B. Arrange hoist for parallel lug mounting from a 4-wheel geared trolley.

C. Hoist: Standard type.

D. Design drum with machine-cut grooves and guarded flanges and with capacity to take entire run of cable in one layer with no overlapping.

E. Provide hoist with an upper and lower geared limit switch with automatic reset control circuit to prevent overtravel. Settings to be field adjustable in accordance with OSHA 29 CFR 1910.179.

F. Supply sufficient hoisting cable with hoists for two-part single reeving and to accommodate not only the maximum lift but two additional wraps on drum. Make cable flexible high-strength stainless steel cable with a load safety factor of at least 5 to 1.

G. Make load block of rugged construction containing a ball-bearing sheave and a high-grade forged-steel swivel hook with antifriction bearings. Hook shall be forged carbon steel.

H. Provide control equipment in an enclosed compartment which forms an integral part of hoist and include a transformer for a 120-volt control circuit.

2.06 TROLLEYS:

A. Army Type Hoists: Close headroom type, integrally built into a 4-wheel plain or geared trolley.

B. Provide trolley operating wheels with chain guides and make chains for each of sufficient length to hang 3 feet above operating floor.

C. Motor-Driven Trolleys: Four-wheel type consisting of a fully enclosed electric motor equipped with a magnetic brake, a geared transmission completely enclosed in an oiltight housing and suspended on flanged driving wheels with power to two wheels. Use ball or roller bearings throughout.

D. Provide wheels with lifetime lubricated ball or roller bearings. Wheels shall be heat treated steel for long life. At rated capacity, load-bearing parts shall be stressed to no more than 20 percent of their limit.

E. Make trolleys designed for operation on beam or rail indicated on drawings. Trolleys to be provided by the hoist manufacturer.

2.07 SAFETY END STOPS:

A. Provide safety end stops on all open ends of track (or where indicated) to prevent trolley from running off ends or damaging building. Provide stops with capability of withstanding impact imposed by motion of fully loaded hoist and trolley.

2.08 TRACK:

A. Monorail Track: Standard beam of sizes indicated on drawings.

B. Shop fabricate all curves for either track or switches to radius indicated.

C. Erect trackrail level throughout, with section ends machined fitted and spliced with web-type or other designed couplings to provide flush level connections. Maximum gap between adjacent ends not exceeding 1/16-inch.

2.09 CABLE REELS OR FESTOON SYSTEM:

A. Manufacturers:

1. Gleason Reel Div.

2. Aero-Motive Mfg. Co.

3. Liftech.

4. Feed cable reel for electric current supply for all electric hoists with trolleys, except as otherwise indicated, through a single flexible, multi-conductor power cable from a self-winding spring-operated reel located near mid-point of trolley travel or where indicated on drawings.

5. The cable shall have at least [_4_] conductors.

6. The reel shall have a fixed base.

7. The reel shall have a roller outlet.

8. Provide reels with weatherproof enclosures.

B. Furnish junction box, lockable disconnect, and 480V outdoor plug and socket to connect cable reel to power supply circuit with hoist.

2.10 ELECTRICAL CONTROLS:

A. Supply complete integral electrical control system with the electric hoisting equipment (by hoist manufacturer) consisting of starters, circuit breakers, overload relays, limit switches, control transformer for a 120-volt control circuit, control relays, and controlling devices.

B. Furnish magnetic controls for motors. Design controls to permit "inching" in both forward and reverse directions under full load, automatically regulated acceleration, and rapid brake response.

C. Provide each hoist with limit switches of automatic-reset control circuit type to prevent overtravel in both raising and lowering directions.

D. Compliance: Make all electrical equipment including motors, controls, resistors, brakes plus all conduit, wiring, panels, and enclosures with applicable requirements for materials, workmanship, construction, and installation of latest NEMA.

2.11 POWER SUPPLY

A. A 15 Amp 480V 3 phase power to a local disconnect will be provided under the Electrical Division. All wiring from this disconnect switch to the trolley and hoist will be completed in accordance with Section 16050 – Electrical Work General.

2.12 MOTORS:

A. Motors for Hoists and Trolley: Totally enclosed, reversible, induction motors especially adapted to hoist service.

B. Enclosure: As indicated in the Bridge Crane Schedule.

C. Insulation: Minimum Class “F” with Class “B” temperature rise, 40 degrees C ambient unless otherwise indicated or specified.

D. Service Factor: 1.15.

E. Provide capacity to start and operate hoists at maximum speed rated capacity indicated without exceeding nameplate ratings for current and power and without operating in the service factor.

F. The motors shall be high-torque with anti-friction bearings and shall be designed for trolley and hoist duty. Provide ball or roller bearings, in accordance with ABMA Standard 9 and Standard 11; minimum L-10 life of 100,000 hours. The motors shall be coupled to the equipment by approved flexible couplings.

G. Premium efficient motors, nominal and minimum motor efficiencies per NEMA MG 1.

H. Rating: 460V, 3-phase, 60 Hertz.

I. Provide reversing motor starters of the magnetic type. The design of the starters shall be such as to provide a smooth acceleration, facilitate inspection or adjustment, and permit rapid replacement of wearing parts. Trolleys shall be equipped with ballast resistors or solid state acceleration control for smooth spotting.

K. Upper and lower geared (or screw type) limit switches on the hoist travel shall be furnished to stop the motor operating to prevent over-running of the hoist. A weight operated type limit switch in the control circuit will be accepted, provided it is in a circuit which is completely independent of the geared limit switches.

L. Supply a fused 480/120V, single-phase, 60 Hz control transformer mounted on the hoist.

M. Provide a 480 V, 3 pole, 18,000 amp asymmetrical interrupting rating, main molded case circuit breaker, with both magnetic and thermal trip units, to be connected ahead of all power and control equipment. The breaker shall be equipped with windows to permit the position of the contacts to be seen.

N. Supply a main line contactor to simultaneously interrupt all conductors supplying power to crane motors. The contactor shall be controlled by a stop and reset means. The contactor shall be rated in accordance with NEC 610, Part IV.

O. The rating of the main circuit breaker shall be in accordance with NEC 610.32

2.13 PUSHBUTTON CONTROL:

A. The motions of the hoist shall be controlled from a single pendant control station.

B. The pendant control station shall be in accordance with NEMA Standard ICS-1970 Section ICS-442-28.11.

C. The pushbuttons shall be easy to operate when the operator is wearing bulky protective gloves.

D. There shall be a separate pushbutton for each motion and each direction. The control station shall also be equipped with emergency "STOP" and 'RESET' pushbuttons. The function of the "STOP" and "RESET" pushbuttons shall be to interrupt and reset power to all motions by use of the main line contactor. All pushbuttons shall be clearly identified.

E. Pendant Control Station: The pendant control station shall operate on low voltage (120 V (AC)) and shall be suspended from the hoist. The suspended conductors shall be protected from strain and the cable shall be type SO or equivalent. The control station shall be arranged so that the hoist can be operated from the floor. The pendant shall be no more than 1.0 m off of the floor.

F. Provide pendent pushbutton control station with sufficient pushbuttons to control all operations of hoists and trolley. Clearly mark each pushbutton to indicate its function. Make cable long enough to reach within 4 feet of operating floor or platform level with a supporting chain. If necessary, attach an arm to hoist so that pendent cable and pushbutton controls will hang vertically and be readily accessible from operating positions.

G. Controls for Wound-Rotor Motors: Hoist five-step, full magnetic or variable frequency inverter type as indicated in the bridge crane schedule. Bridge and trolley shall be variable frequency control type. Design all other controls to be designed for single-speed motors.

H. Provide hoist with an upper limit switch of automatic reset control circuit type to prevent overtravel.

2.14 CONDUCTORS:

A. Manufacturers:

1. Insul-8-Bar Protected Conductors made by Insul-8-Corp.

2. Safety-T-Bar Conductor Systems made by Howell Corp.

3. Duct-O-Bar Conductor System made by Duct-O-Wire Co. Use equipment and accessories approved by Underwriter's Laboratories.

B. The conductor system shall be supplied and installed by the Contractor and shall be of the flat festooned cable type.

C. Wiring shall be in accordance with NEC 610, Part II, except where specified otherwise below.

D. Conductors used for power shall not be smaller than No. 12 AWG stranded and conductors for control shall not be smaller than No. 14 AWG stranded.

E. Provide weather shield for exterior conductors.

F. Provide collectors of sliding shoe type with an adjustable spring-load arm capable of horizontal or vertical movement to automatically adapt to irregularities of conductor. Set shoe in a molded-plastic head that will prevent external contact with shoe when it is running on conductor. There shall be no exposed bare current-carrying surfaces or wires in collector or arm where shoe is in contact with conductor.

2.15 GEARING, SHAFTS AND AXLES

A. All gears and pinions shall be accurately formed, machine-cut teeth of acceptable shape and finish. Gears shall be of steel, rolled, forged, or cast, with teeth cut from the solid blank. Pinion blanks shall be steel forgings or cut from rolled steel bars. The relationship between the diameter and face width shall be such that undue deflection is avoided.

B. Gears and other parts which revolve at high speeds shall be machined at the periphery for running balance.

C. Gears shall be enclosed in gear cases or protected by approved safety guards. Gear cases shall allow easy opening for inspection and, where oil lubrication is intended, the cases shall be free from leakage. Exposed couplings, if any, shall also be guarded.

D. Shafting shall be turned from solid, rolled, or forged steel bars. Small noncritical shafts may be of cold rolled steel. Fixed axles shall be held in position by keeper plates and shall be designed for easy removal. Live axles shall have wheels pressed on and keyed.

2.16 BRAKES

A. Each crane and hoist shall be provided with two brakes, one motor brake and one load brake. Each of the two brakes shall be capable of holding the load in case of a power cutoff. At least one of the brakes shall be electrically operated and controlled, so arranged as to be applied automatically in case of power cutoff or failure in any or all of the supply phases, and to release automatically upon the application of power to the motor. The brake shall be capable of sustaining one and one-half times the maximum rated load on the hook when the power is off.

B. The load brake shall be of a high grade and trouble-free design of sufficient size to be free from overheating under all conditions of service and to sustain one and one-half times the maximum rated load, so constructed that:

1. With motor inoperative, the brake shall sustain the load.

2. In order to lower the load, the motor must be operated by the "lower" pushbutton.

3. With the motor operating in the lower direction, the brake shall provide smooth and accurate control of the lowering speed.

4. With the motor operating in the hoisting direction, the brake shall be inoperative and free from friction.

5. Hoists equipped with a single holding brake only will not be considered.

C. The electrically driven trolley shall be equipped with one electrically operated and controlled brake arranged to be applied automatically in case of power cutoff or failure in any or all of the supply phases, and to release automatically upon the application of power to the trolley motor.

D. All motor brakes shall be designed to operate from a source of 480 V, 3 pH, 3 wire, 60 Hz supply.

E. Each brake shall carry a suitably and permanently marked metal plaque which shall describe the adjustments to be made to obtain the correct brake setting.

F. The electrically driven bridge shall be equipped with one electrically operated and controlled brake. The requirements for this brake shall be the same as those specified for the trolley brake.

2.17 GROUNDING

A. Grounding shall be in accordance with NEC 610, Part VII.

2.18 SHOP PAINTING:

A. Primer and Finish Paint: Shop apply to all exterior ferrous surfaces high solids epoxy in accordance with Section 09940.

B. Surface preparation, mixing and application and safety requirements shall be in accordance with the paint manufacturer's printed instructions and as specified.

C. Ferrous surfaces which are not to be painted shall be given a shop applied coat of grease or rust resistant coating.

D. Provide additional shop paint coating for touch-up to all surfaces after installation and testing is completed and equipment accepted.

PART 3 - EXECUTION

3.01 INSTALLATION:

A. Install items in accordance with manufacturer's printed instructions and as indicated and specified.

B. Check horizontal and vertical alignment of track and rails.

C. Erect rack level throughout, with section ends machined fitted and spliced with web-type couplings to provide flush level connections. Maximum gap between adjacent ends not exceeding 1/16-inch.

D. Do not use cast fittings.

3.02 FIELD TESTING:

A. Provide as specified herein. Perform all tests with instrumentation controls and motor controls. Perform testing in accordance with OSHA 29 CFR 1910.179 and as specified herein.

B. After installation of hoist equipment, and after inspection, operation, testing and adjustment have been completed by manufacturer's field service technician, conduct test for each hoist in presence of the Engineer to determine its ability to operate at rated speeds and capacity under conditions specified and indicated. During tests, observe and record, capacity and motor inputs. Promptly correct or replace all equipment not conforming to the requirements of this section revealed by or noted during tests, at no additional cost to the Owner, and repeat tests until specified results are obtained. Contractor to provide all labor, weights and materials for conducting tests.

1. Provide a 60-minute test for each hoist.

2. Running test shall consist of moving hoist and trolley through two complete cycles. The first cycle will be with no load. For the second cycle, the unit will be loaded with 100 percent of the specified load rating.

3. Test and simulate all limit switches, locking and safety devices.

C. Make all adjustments to place equipment in specified working order at time of above tests.

D. After three (3) unsuccessful testing attempts, remove and replace equipment at no additional cost to the Owner with equipment that will meet all requirements specified and indicated.

3.03 FIELD TOUCH-UP PAINTING:

A. After installation and testing, apply touch-up paint to all scratched, abraided and damaged shop painted surfaces. Coating type and color shall match shop painting.

3.04 CONTRACT CLOSEOUT:

A. Provide in accordance with Section 01700.

END OF SECTION

SECTION 15072

BURIED STEEL PIPE AND FITTINGS

PART 1 - GENERAL

1.01 DESCRIPTION:

A. Provide and test steel pipe 10-inch in diameter and larger, fittings and appurtenances for 42-inch diameter steel replacement as indicated and in compliance with the approved Drawings.

B. Furnish all labor, materials, tools, equipment, and incidentals required and install, make ready for operation, buried steel piping under this contract as shown on the Contract Drawings and as specified. The work shall include the removal of existing pipe, repairs of existing pipe as directed, installation of new pipe and PCCP/steel transition adapter, testing of materials, pipe, and pipelines. Supply, deliver, and install all other miscellaneous piping, fittings, gaskets, mortar or other lining material as specified at interior joints, heat shrink sleeves at exterior joints as required, and appurtenances (regardless of size) including services. This shall include, but not be limited to: welding joints as required, installation of harnessing and special couplings and welded buttstraps, weld seam reinforcement, PCCP/steel transition adapter, interior polyurethane lining, and exterior polyurethane coating system outside of all pipe (except at valves that may have flanged ends) complete as shown on the Drawings and as specified herein.

C. Steel pipe and steel fittings are approved pipe material for the 42-inch raw water replacement pipe. The 42-inch diameter shall be the steel outside diameter of the raw water transmission pipe. Steel pipe shall be installed upstream of the Outlet Works as shown on the Drawings and as required.

D. Steel pipe and steel fittings shall be designed and manufactured in accordance with the latest edition of AWWA C200, AWWA M11 Steel Pipe Design Guidelines and other applicable AWWA standards.

E. The steel pipe wall thickness shall be minimum 0.50” using steel yield strength of 42,000 psi. The steel pipe shall have field welded joints using double weld inside and outside, or double welded-butt joint.

F. Pipe and fittings shall be interior polyurethane lined to AWWA C222 and exterior coated with a polyurethane coating per AWWA C222.

G. AWWA C222 coated pipe shall have joints wrapped with heat shrink sleeves per AWWA C216.

1.02 REFERENCES:

A. ASTM International (ASTM):

1. A139: Standard Specification for Electric-Fusion (Arc)-Welded Steel Pipe (NPS 4 and Over).

2. A572: Standard Specification for High-Strength Low-Alloy Columbium-Vanadium Structural Steel.

B. American Society of Mechanical Engineers (ASME):

1. B1.1: Unified Screw Threads.

2. B18.2.2: Square and Hex Nuts.

3. Boiler and Pressure Vessel Code Sections V, VIII, and IX .

C. American Water Works Association (AWWA):

1. C200: Standard for Steel Water Pipe, 6 Inches and Larger.

2. C206: Standard for Field Welding of Steel Water Pipe.

3. C207: Standard for Steel Pipe Flanges for Waterworks Service, sizes 4 in. through 144 in.

4. C208: Standard for Dimensions for Steel Water Pipe Fittings.

5. C216 - Heat-Shrinkable Cross-Linked Polyolefin Coatings for Steel Water Pipe and Fittings

6. C222: Standard for Polyurethane Coatings and Linings for Steel Water Pipe and Fittings.

7. C604: Installation of Buried Steel Water Pipe – 4 inches (100 mm) and Larger.

8. M11: Steel Pipe – A Guide for Design and Installation.

D. American Welding Society (AWS):

1. D1.1: Structural Welding Code - Steel

2. QC1: Standard for AWS Certification of Welding Inspectors

E. NSF International

1. 61: Drinking Water System Components – Health Effects

1.03 SUBMITTALS:

A. Submit the following in accordance with Section 01300:

1. Certified shop and erection drawings. Contractor shall submit electronic files of the piping layout including the following.

    a. Pipe layouts in full detail.

    b. Location of hangers and supports.

    c. Location and type of anchors.

    d. Location of couplings and flanges.

    e. 1/2 inch = 1 foot-0 inches scale details of all wall penetrations and fabricated fittings or special fittings.

    f. Schedules of pipe, fittings, and other appurtenances.

    g. Electronic files shall conform to the following minimum requirements:

        (1) Electronic Files: AutoCAD latest version, drawn to scale.

        (2) Submit electronic files as part of the Shop Drawing submittal.

        (3) Submit electronic files on CD or DVD.

        (4) Drawings shall be in conformance with all other requirements as specified in this specification.

2. Sworn certificates in duplicate of shop tests showing compliance with appropriate standard.

3. Reports of ASME Section IX welding certifications.

4. Catalog cuts of joints, couplings, harnesses, gaskets, fasteners and other accessories.

5. Brochures and technical data on coatings and linings and proposed method for application and repair including coating of girth welds.

6. Submit pipe design calculations for record purposes only including formulas used in the calculations, values of constants used in the formulas in accordance with AWWA C200 and AWWA M11 based on internal pressure, calculations supporting selected wall thickness and supporting welded joint design as required, burial depth, deflection, handling, external loads, buckling, and restraint for record purposes only. The Contractor and Pipe Manufacturer shall include details of construction surcharge loads and handling. Design calculations shall be signed and sealed by a Registered Professional Engineer licensed to practice in the Commonwealth of Massachusetts. The pipe manufacturer shall also certify the pipe and design. This shall include all pipe and fittings restraint requirements.

7. Provide record drawings.

8. Provide tag names and numbers for all sections of piping and fittings.

9. Installation Work Plan: The plan shall include a narrative and complete details on the 42-inch steel replacement pipe installation, including handling, placement, leveling, supports and tie downs, field welding, connections, PCCP/steel adapter, interior and exterior coating, backfill, concrete thrust collar and thrust block, steel thrust ring, and concrete encasement, inspection, testing procedures and repairs.

10. Coating materials and application procedures including coating of girth welds.

11. Shop and field hydrostatic testing procedures.

12. The Contractor shall submit the installation plan and testing procedure for approval from the Engineer prior to installation. Testing shall be performed in accordance with the testing procedures submitted by Contractor and approved by the Engineer.

B. Material Certification:

1. Provide certification from the piping and fittings manufacturer that the materials of construction specified are recommended and designed for the service conditions specified and indicated. If materials other than those specified are proposed based on incompatibility with the service conditions, provide technical data and certification that the proposed materials are recommended and designed for the service conditions specified and indicated including an installation list of a minimum of five (5) installations in operation for a minimum of five (5) years.

2. Where materials are not specified, provide technical data and certification that the proposed materials are recommended and designed for the service conditions specified and indicated.

1.04 QUALITY ASSURANCE:

A. Welder Qualifications:

1. Qualify and certify welding procedures, welders, and operators in accordance with ASME Section IX, for shop welding and AWS D1.1 for project site welding of piping work.

2. Qualification for welders: All welding shall be done by skilled welders, welding operators, and tackers who have had adequate experience in the methods and materials to be used. Welders shall be qualified under the provisions of AWS D1.1 by an independent local, approved testing agency not more than 6 months prior to commencing Work. Machines and electrodes similar to those used in the Work shall be used in qualification tests. Furnish all material and bear the expense of qualifying welders at no increased cost to Client.

3. Visually inspect welding while the operators are making the welds and again after the work is completed. After the welding is completed, hand or power wire brush

welds and clean them before the inspector makes the check inspection. Inspect welds for defects exceeding tolerances allowed by code under which the weld was made. Repair all defects exceeding tolerance.

1.05 DELIVERY, STORAGE AND HANDLING:

A. During loading, transportation and unloading, prevent damage to pipes and coatings. Load and unload each pipe under control at all times. Under no circumstances will a dropped pipe be used unless inspected and accepted by Engineer. Place padded skids or blocks under each pipe in the shop and securely wedge pipe during transportation to protect pipe, lining, and coating.

PART 2 - PRODUCTS

2.01 MANUFACTURERS:

A. Thompson Pipe Group

B. Northwest Pipe

C. Mid America Pipe

D. American Spiral Weld

E. Approved equal.

2.02 MATERIALS:

A. Steel Pipe 30-inch (750 mm) diameter and larger: AWWA C200 Types ASTM A139 Grades C, D or E; ASTM A572 Grades 42 or 50.

B. Interior piping wall thickness: Increase wall thickness to limit combined stress (circumferential longitudinal and localized) to 75% of the minimum yield of the steel used.

C. Site Specific Design Conditions:

1. Internal working pressure, Pw = 190 psi

2. Internal transient pressure (in excess of Pw), Pt = 30 psi

3. Internal vacuum pressure, Pv = -14.7 psi (full vacuum)

4. Internal static pressure, Pst = 200 psi

5. Soil cover height, H = 4.5 ft minimum per drawings,

6. Height of groundwater, Hw = at ground surface (ft)

7. Live load = HS-20 design truck

2.03 PIPE:

A. Steel pipe to be fabricated from AWWA C200 steel with minimum yield strength of 42 ksi. Allowable specifications include: ASTM A139 Grades C, D or E; ASTM A572 Grades 42 or 50.

B. Fabricate to sizes, dimensions, and shapes indicated. Steel pipe shall be manufactured round so that the difference between maximum and minimum diameters shall not exceed 0.5 percent of the diameter for the section.

C. Sizes, Pipe, Fittings and Specials:

1. 12 inch (300 mm) and smaller: Nominal.

2. 14 inch (350 mm) thru 24 inch (600 mm): Actual outside diameter.

3. 30 inch and larger: Nominal size to be O.D. before coating or as shown on the Drawings.

D. Seams:

1. Except for seamless mill type pipe, provide piping fabricated from steel plates rolled into cylinders or sections thereof with longitudinal seams or spiral seams butt welded.

2. Do not use more than two longitudinal seams in piping 72 inch and smaller in size.

3. Butt weld girth seams at least 6 feet apart, except in specials and fittings.

4. Longitudinal weld seams on adjacent steel pipe sections to be staggered.

2.04 FITTINGS:

A. Fabricate in accordance with AWWA C208.

B. Provide elbows with the following radius:

1. Interior and Exposed Piping: 1.50 times the nominal diameter

2. Buried Piping: 2.50 times nominal diameter, unless otherwise indicated or specified.

3. Provide elbows in accordance with the following:

Fitting Bend Angle, degrees	Number of Pieces
0 to 22.50	2
23 to 45	3

Fitting Bend Angle, degrees	Number of Pieces
46 to 67.50	4
68 to 90	5

C. Provide reinforced tees, laterals, and outlets in accordance with ASME Pressure Vessel Code, Section VIII, Paragraph UG-37 or AWWA M-11, Chapter 7.

D. Provide reducing sections with same shell thicknesses required for larger ends.

E. Special Sections:

1. Provide fittings and special sections with ends as indicated and fabricated to shapes, sizes, and dimensions indicated.

F. Provide fittings shop fabricated from previously hydrostatically tested straight pipe with magnetic particle non-destructive testing of all welds that were not previously tested in the straight pipe.

G. General

1. Thrust rings and seepage collars to be manufactured from the same steel grade as the pipe they are welded to.

2.05 FIELD JOINTS:

A. Type as indicated:

1. Location and type of joint may be modified to provide for lining, coating and flexibility in field assembly as accepted by the Engineer.

B. Provide pipe end preparation and tolerances in accordance with AWWA C200.

2.06 FLANGES:

A. Provide in accordance with AWWA C207 depending on pressures and as shown on the Drawings. The flange located at the downstream end of the 42-inch steel replacement pipeline inside the EDV Chamber is not covered by this specification. Refer to Specification 15073 for the downstream flange details.

B. Provide flanged end pipe fitted with slip-on flanges. Provide longitudinal or spiral welds ground flush to accommodate type of flanges provided.

1. Provide bolts and bolt-studs in accordance with AWWA C207 with hexagonal or square heads, coarse thread fit, threaded full length with ends chamfered or rounded.

2. Project bolt ends 1/4-inch beyond surface of nuts.

a. Provide hexagonal nuts with dimensions in accordance with ASME B18.2.2 and coarse threads in accordance with ASME B1.1.

C. Provide face and finish flanges per AWWA C207.

D. Provide flanges attached normal to axis of pipe for alignment.

E. Provide flanges tested, after welding to pipe, for true plane and reface, to bring them within specified tolerances.

F. Blind Flanges: Provide per AWWA C207 and conforming in diameter, drilling, and thickness to flanges to which they mate and reinforced to produce a watertight joint under test pressures indicated in the Contract Documents or elsewhere.

G. Gaskets:

1. Provide gaskets per AWWA C207 made from 1/8-inch thick compressed non-asbestos material.

2. Materials:

a. Water, Wastewater and Sludge Services: Buna N, Neoprene

b. UV Systems: Viton

3. Manufacturers:

a. Garlock

b. Flexitallic

c. Approved equivalent

2.07 WELDED JOINTS:

A. Welds:

1. Sound and free from embedded scale or slag, with tensile strength of weld not less than that of thinner of connected sections. Welds to be watertight.

B. Field welding of lined pipe is not acceptable unless otherwise indicated.

C. Field welds of interior piping: Butt welds.

1. Outside back-up bar may be used.

D. Field welds of buried piping: Bell and spigot lap welds with double weld inside and outside, or double welded-butt joint.

E. Provide field welds, in accordance with AWWA C206.

2.08 LINING AND COATING:

A. Shop-Applied Polyurethane Lining:

1. Provide lining in accordance with AWWA C222.

2. For buried piping provide 40 mils (1,000 µm).

3. For exposed piping provide 40 mils (1,000 µm).

4. Applied per manufacturer's written instruction.

B. Shop-Applied Polyurethane Coating:

1. Exterior steel pipe surfaces shall be coated with a 100% solids aromatic polyurethane that is compliant with AWWA C222. The coating shall be applied in two (2) coats of approximately 20 mils each for a total dry film thickness of 40 mils.

2. The application of coating materials, including the preparation of surfaces; priming; and coating of the pipe and fittings, shall be done in the shop by an established pipe lining and coating company acceptable to the manufacturer of the coat materials and to the Engineer. Repairs of any damage to the shop coating and the field coating including girth welds shall be done by experienced and qualified personnel.

3. All coatings shall be electrically inspected for defects and all defects located shall be properly repaired prior to final acceptance.

2.09 STEEL PIPE WELD TESTING

A. All shop welds of the steel pipe assembly shall be non-destructively tested. Testing shall include submitting written documentation procedures in accordance with ASME BPVC, Section V.

B. All shop and field fillet welds shall be visually inspected and shall be tested with the magnetic particle method throughout the entire length. The method and acceptance standards for the magnetic particle inspection shall be in accordance with ASME code, Section V, and Section VIII, Division 2.

C. All shop and field butt longitudinal and circumferential joints shall be 100 percent ultrasonically examined. Standards of acceptance of welded joints and the procedure for ultrasonic examinations shall be that of ASME code, Section VIII, Division 2.

PART 3 - EXECUTION

3.01 INSTALLATION OF PIPE:

A. Install pipelines per AWWA C604 to lines and grades indicated and support. Where temporary supports are used, provide temporary supports to prevent shifting or distortion of pipe. Provide for expansion.

B. Before assembly, remove debris from inside pipes and fittings.

C. Before flange pieces are assembled, remove rust resistant coating from machined surfaces, clean gaskets and smooth burrs. Make up flanged joints tight, and prevent strain upon valves or other pieces of equipment.

1. Bolt threads must fully engage the nuts. At a minimum the bolt must be flush with the nut and no more than 1/2-inch excess thread protruding from the nut.

D. Examine pieces for damage. Do not install pieces that are damaged according to Engineer. If any damaged piece should be discovered after having been installed, remove and replace with a sound piece at no additional cost to the Authority.

E. Handle pipe with equipment such as nylon slings and padded skids, designed to prevent damage to the coating. Repair abrasions and injuries to the coating prior to the application of insulation or prior to the application of final field coating.

3.02 INSTALLATION OF LINING AND COATING:

A. Field surface preparation and coating/lining of weld joints or coating/lining damage shall be performed in accordance with the parent coating manufacturer's written instructions. All coating materials shall be from the same manufacturer.

3.03 INSTALLATION OF PIPE SUPPORTS:

A. Proceed with installation of pipe supports only after required building structural work has been completed and concrete has reached its 28 day compressive strength.

B. Support piping to prevent forces applied on valves and equipment.

3.04 PHYSICAL CHECKOUT, FIELD AND FUNCTIONAL TESTING:

A. Clean dirt, dust, oil, grease and other foreign material, before pressure and leakage tests.

B. Water for testing provided by the Contractor.

C. Pressure and Leakage Tests shall be done per C604:

1. Provide temporary testing plugs or caps; pressure pumps, pipe connections, meters, gages, equipment, and labor.

2. Test the entire steel section of pipeline excluding the upstream PCCP/steel adapter but including the completed and connected downstream steel pipe manifold and all connecting valves, fittings and appurtenances inside the EDV Chamber.

3. Fill the steel section of pipeline with water using one or more of the drain valves on the basket strainers and expel air at the upstream flanged end.

4. Pressure and leakage test consists of first raising pressure (based on elevation of lowest point of section under test and corrected to gage location) to pressure in psi numerically equal to test pressures indicated in the Contract Documents or on the Drawings, or as directed by the ENGINEER.

5. Close and isolate all three legs of the steel manifold by closing the downstream inline knife gate valves.

6. No visible leakage in joint is acceptable.

7. If unable to achieve and maintain specified pressure for one hour with no additional pumping, section has failed to pass test.

8. If section fails pressure and/or leakage test, locate, uncover, and repair or replace defective pipe, fitting, or joint, and conduct additional tests and repairs until section passes test at no additional cost and without any time extensions.

D. Make piping connections to equipment with pipe in a free supported state and without application of vertical or horizontal forces to align piping with the equipment flanges.

E. The steel pipe assembly shall be field hydrostatically tested prior to placement of concrete embedment in accordance with these specifications. The hydrostatic test pressure shall be at least 1.25 times the design static water pressure. The test shall be performed for at least one hour with no loss of pressure.

END OF SECTION

SECTION 15073

EXPOSED STEEL PIPE AND FITTINGS

PART 1 - GENERAL

1.01 DESCRIPTION:

A. Provide lined and coated welded steel pipe, specials, and fittings and stainless steel pipe, and fittings as specified herein, complete, in accordance with the Contract Documents.

B. This specification section includes the 42-inch by 24-inch pipe manifold and 24-inch steel piping and flanges in the Energy Dissipating Valve (EDV) Chamber.

C. This specification section includes the 24-inch stainless steel piping, flanges, and 90-degree elbows in the EDV Chamber and Equalization (EQ) Tank.

1.02 REFERENCE STANDARDS

A. The following is a list of standards which may be referenced in this section:

1. American Society of Mechanical Engineers/American National Standards Institute (ASME/ANSI):

a. B16.5-2020, Pipe Flanges and Flanged Fittings, NPS 1/2 Through NPS 24.

b. B16.9-2018, Factory-Made Wrought Buttwelding Fittings.

c. B36.10-2022, Welded and Seamless Wrought Steel Pipe.

d. B16.47-2020, Large Diameter Steel Flanges: NPS 26 through NPS 60.

e. BPVC.V-2021, Boiler and Pressure Vessel Code, Section V: Nondestructive Examination.

f. BPVC.VIII.1-2021, Boiler and Pressure Vessel Code, Section VIII, Division 1: Rules for Construction of Pressure Vessels.

g. BPVC.IX, Boiler and Pressure Vessel Code, Section IX: Welding and Brazing Qualifications.

h. SA-312, Specification for Seamless, Welded and Heavily Cold Worked Austenitic Stainless Steel Pipe

2. American Society for Nondestructive Testing Inc. (ASNT):

    a. SNT-TC-1A-2020, Personnel Qualification and Certification in Non-Destructive Testing.

3. American Petroleum Institute (API)

    a. 5L, Line Pipe

4. American Water Works Association (AWWA):

    a. C200-17, Steel Water Pipe – 6 inch (150 mm) and Larger.

    b. C208-22, Dimensions for Fabricated Steel Water Pipe Fittings.

    c. M11 (Manual), Steel Pipe - A Guide for Design and Installation.

5. American Welding Society (AWS):

    a. A2.4, Standard Symbols for Welding, Brazing, and Nondestructive Examination.

    b. A3.0, Standard Welding Terms and Definitions.

    c. D1.1/D1.1M, Structural Welding Code – Steel.

    d. QC1, Specification for AWS Certification of Welding Inspectors.

6. American Society for Testing and Materials, International (ASTM):

    a. A20/A20M-20, Standard Specification for General Requirements for Steel Plates for Pressure Vessels.

    b. A53/A53M-22, Standard Specification for Pipe, Steel, Black and Hot-Dipped, Zinc-Coated, Welded and Seamless.

    c. A193/A193M-23, Standard Specification for Alloy-Steel and Stainless Steel Bolting for High Temperature or High Pressure Service and Other Special Purpose Applications.

    d. A194/A194M-23, Standard Specification for Carbon Steel, Alloy Steel, and Stainless Steel Nuts for Bolts for High Pressure or High Temperature Service, or Both.

    e. A234/A234M-23a, Standard Specification for Piping Fittings of Wrought Carbon Steel and Alloy Steel for Moderate and High Temperature Service.

    f. A312/A312M-22a, Standard Specification for Seamless, Welded, and Heavily Cold Worked Austenitic Stainless Steel Pipes.

g. A370-22, Standard Test Methods and Definitions for Mechanical Testing of Steel Products.

h. A537/A537M-20, Standard Specification for Pressure Vessel Plates, Heat-Treated, Carbon-Manganese-Silicon Steel.

7. National Sanitation Foundation/American National Standards Institute (NSF/ANSI):

a. 61-2022, Drinking Water System Components - Health Effects, Includes Errata.

1.03 DEFINITIONS

A. Fittings and Specials: Including, but not limited to, fittings, closure pieces, bends, elbows, reducers, tees, wyes, bifurcations, crosses, outlets, manifolds, nozzles, wall sleeves, bulkheads, vent pipes, and other piping and appurtenances fabricated from steel plate, sheet, or coils as required to provide the Work, complete. Specials shall also include piping above ground or inside structures.

B. Acronyms

1. CJP: Complete Joint Penetration.

2. CWI: Certified Welding Inspector.

3. LT: Leak Testing.

4. MPS: Main pipe supplier.

5. MT: Magnetic Particle Testing.

6. NDE: Nondestructive Examination.

7. NDT: Nondestructive Testing.

8. PAUT: Phased Array Ultrasonic Testing.

9. PJP: Partial Joint Penetration.

10. PQR: Procedure Qualification Record.

11. PT: Liquid Penetrant Testing.

12. RT: Radiographic Testing.

13. UT: Ultrasonic Testing.

14. VT: Visual Testing.

15. WPQ: Welder/Welding Operator Performance Qualification.

16. WPS: Welding Procedure Specification.

1.04 SUBMITTALS

A. Shop Drawings: Submit shop drawings of steel pipe, specials, and fittings in accordance with Section 01300 – Submittals and the Contract Drawings. Submittals for steel pipe, specials, and fittings shall be prepared and submitted by a single pipe supplier only. The supplier responsible for preparation of the material shall be the Main Pipe Supplier (MPS).

B. Action Submittals

1. Shop drawings that shall include all necessary dimensions and details on pipe joints, fittings, fitting specials, valves, appurtenances, design calculations, and material lists. They shall include full and complete information regarding location, type, size, and extent of all welds. They shall distinguish between shop and field welds. Shop drawings shall indicate by welding symbols or sketches the details of the welded joints and the preparation of parent metal required to make them. Joints or groups of joints, in which welding sequence or technique are especially important, shall be carefully controlled to minimize shrinkage stresses and distortion.

2. Fabrication Information:

a. Pipe and fitting details for temporary and permanent facilities indicating:

(1) Cylinder thickness.

(2) The position, type, size, and area of reinforcement.

(3) Manufacturing tolerances.

(4) Maximum angular deflection limitations of field joints.

(5) Closure sections and cutoffs for field length adjustment.

(6) Bulkheads, including details for removal of test bulkheads and repair of lining.

(7) All other pertinent information required for the manufacture and installation of the product.

b. Welded joint details including:

(1) Butt joints.

(2) Miter-cut ends for alignment conformance.

3. Welding Data (Shop and Field Welding):

    a. Show on a weld map, location, type, size, and extent of welds with reference called out for WPS and NDE numbers in tail of welding symbol.

    b. Distinguish between shop and field welds.

    c. Indicate, by welding symbols or sketches, details of welded joints and preparation of base metal.

    d. Welding and NDE symbols shall be in accordance with AWS A2.4.

    e. Welding terms and definitions shall be in accordance with AWS A3.0.

4. Product data for the following:

    a. Pipe:

        (1) Certified mill test report for the materials used for all piping, including those used to fabricate fittings and specials furnished for this project. At a minimum, the mill test report shall contain the following information:

            (a) Chemical composition of the steel.

            (b) Yield and tensile strength.

            (c) Supplementary requirements for toughness testing for shear area in accordance with API 5L, Annex G, G.3.1.

    b. Coatings and Linings:

        (1) In accordance with Section 09970.

    c. Flanged Joints:

        (1) For Each Flanged Connection: Reference standard, dimensional data, bolt hole number, pattern and diameter, bolt diameter and length, face condition (raised or flat).

        (2) Gaskets and Bolting: Technical data sheets itemizing chemical composition, technical and performance information that indicates compliance with this Specification.

5. Pipe handling equipment and methods for loading and unloading pipe, fittings, and specials.

C. Informational Submittals

1. Certificates:

    a. Manufacturer's Certificate of Compliance that products furnished meet requirements of this Specification and compliance with the applicable standards.

    b. Coating and Lining Materials: In accordance with Section 09970.

    c. Steel Pipe Installation: Certificate that training has been provided to Contractor's installation crews regarding proper pipe handling and storage procedures.

2. MPS's written Quality Assurance/Control (QA/QC) Plan.

    a. The MPS's QA/QC program shall ensure the achievement of adequate quality throughout applicable areas of the Contract.

    b. The QA/QC Plan shall describe and define the QA/QC staff, their qualifications, their functional roles, and authorities.

    c. The QA/QC Plan shall describe and define the personnel requirements described herein. The MPS shall provide personnel with assigned QA/QC functions reporting to a Field QA/QC representative. The Field QA/QC representative shall report to a Senior Manager of the MPS and shall have no supervisory or managerial responsibility over the work force. Persons performing QA/QC functions shall have sufficient qualifications, authority, and organizational freedom to identify quality problems and to initiate and recommend solutions. The MPS QA/QC representative(s) shall be on the Site as often as necessary (but not less than the daily hours specified in the Contract Documents) to remedy and demonstrate that Work is being performed properly and to make multiple observations of Work in progress. The QA/QC Plan shall include a statement by the Senior Manager designating the QA/QC representative and specifying authorities delegated to the QA/QC representative to direct cessation or removal and replacement of defective Work.

    d. The MPS's QA/QC program shall ensure the achievement of adequate quality throughout applicable areas of the Contract. The QA/QC Plan shall describe the program and include procedures, work instructions and records. In addition, the Plan shall describe methods relating to areas which require special testing and procedures as noted in the Specifications.

    e. Identification and Control of Items and Materials: Procedures to ensure that items or materials that have been accepted at the manufacturing site are properly used and installed shall be described in the QA/QC Plan. The procedures shall provide for proper identification and storage and prevent the use of incorrect or defective materials.

f. Inspection and Tests:

(1) The MPS shall have written procedures defining a program for control of inspections performed and these procedures shall be described in the QA/QC Plan.

(2) Inspections and tests shall be performed and documented by qualified individuals. At a minimum, "qualified" shall mean having performed similar QA/QC functions on similar type projects. Records of personnel experience, training and qualifications shall be maintained and made available for review by the Engineer upon request.

(3) The MPS shall maintain adequate records of all such inspections and tests. Inspection and test results shall be submitted.

(4) Procedures shall include:

(a) Specific instructions defining procedures for observing work in process and comparing this work with the Contract requirements (organized by specification section).

(b) Specific instructions for noting deficiencies and steps to be taken to have the deficiency corrected, repaired, or replaced.

(c) Specific instructions for recording observations and requirements for demonstrating through the reports that the Work observed was in compliance or a deficiency was noted and action to be taken.

(d) Procedures to preclude the covering of deficient or rejected Work.

(e) Procedures for halting or rejecting Work.

(f) Procedures for resolution of differences between the QA/QC representative(s) and the production representative(s).

(5) QA/QC Plan shall identify contractual hold/inspection points, as well as any MPS imposed hold/inspections points.

(6) The QA/QC Plan shall include procedures to provide verification and control of testing provided by MPS including:

(a) Verifying and noting on Daily Report all required testing was performed and documenting results if available. (Include a sample of the MPS's Daily Report).

(b) Provide location maps for all tests performed or location of Work covered by the tests.

(c) Maintaining copies of all test results.

(d) Submitting all tests.

(e) Ensuring Engineer receives independent copy of all tests.

(f) Ensuring testing lab(s) are functioning independently and in accordance with the Specifications.

(g) Ensuring re-tests are properly taken and documented.

g. Control of Measuring and Test Equipment: Measuring and/or testing instruments shall be adequately maintained, calibrated and adjusted to maintain accuracy within prescribed limits. Calibration shall be performed at specified periods against valid standards traceable to nationally recognized standards and documented.

h. Supplier Quality Assurance: The QA/QC Plan shall include procedures to ensure that procured products and services conform to the requirements of the Specifications. Requirements of these procedures shall be applied, as appropriate, to lower-tier suppliers and/or Subcontractors.

i. Nonconformances and Corrective Action: The QA/QC Plan shall include procedures for handling of nonconformances. Nonconformances are defined as documentation, drawings, material, equipment or Work not conforming to the specified requirements or procedures. The procedure shall prevent the use of nonconformances by identification, documentation, evaluation, separation, disposition, and corrective action to prevent recurrence. Conditions having adverse effects on quality shall be promptly identified and reported to the senior level management. The cause of conditions adverse to quality shall be determined and documented and measures implemented to prevent recurrence.

j. Special Processes and Personnel Qualifications:

(1) The QA/QC Plan shall include detailed procedures for the performance and control of special process (e.g., welding, soldering, heat treating, cleaning, plating, nondestructive examination, etc.).

(2) Personnel performing special process tasks shall have the experience, training and certifications commensurate with the scope, complexity, or nature of the activity.

k. Audits: The MPS's QA/QC program shall provide for documented audits to verify that QA/QC procedures are being fully implemented by the MPS. Audit records shall be made available to the Engineer upon request.

l. Documented Control/Quality Records:

(1) The MPS shall establish methods for control of Contract Documents which describe how Drawings and Specifications are received and distributed to assure the correct issue of the document being used.

(2) The MPS shall maintain evidence of activities affecting quality, including operating logs, records of inspections and tests, audit reports, material analyses, personnel qualification and certification records, procedures, and document review records.

(3) Quality records shall be maintained in a manner that provides for timely retrieval, and traceability. Quality records shall be protected from deterioration, damage, and destruction.

(4) The MPS shall provide a list with specific records as specified in the Contract Documents for submittal at the completion of activities.

m. Acceptance of QA/QC Plan:

(1) Engineer's review and acceptance of the MPS's QA/QC Plan shall not relieve the MPS from any of its obligations for the performance of the Work. The MPS's QA/QC staffing is subject to the Engineer's review and continued acceptance. Owner, at sole option, without cause, may direct the MPS to remove and replace the QA/QC representative. No Work covered by the QA/QC Plan shall start until Engineer's acceptance of MPS's QA/QC plan has been obtained.

(2) Engineer may perform independent quality assurance audits to verify that actions specified in MPS's QA/QC Plan have been implemented. No Engineer audit finding or report shall in any way relieve MPS from any requirements of this Contract.

3. Statements of Qualification:

a. Pipe manufacturer.

b. Fittings and specials fabricator.

c. Welders or Welding Operators:

(1) Name of welder.

(2) Welding procedures/positions for which welder is qualified to weld.

(3) Assigned certification stamp number.

(4) Certification date.

(5) Current certification status.

d. Certified Welding Inspector (CWI) for shop and field welding.

e. NDT Quality Control Personnel.

4. Weld Procedures:

a. Shop and field welding information: At a minimum include a complete welding code paper trail with linkage to Shop Drawings that includes the following:

(1) Written WPS and PQR.

(a) Provide complete joint dimensions and details showing bevels, groove angles, root face, and root openings for all welds.

(b) Notch-tough welding is required when steel thickness exceeds 7/16-inch. For shop and field welding, address supplementary essential variables in addition to essential variables as indicated in ASME BPVC.IX, QW-251.2.

(2) Written NDT procedures.

(3) Current WPQ.

b. Written description of proposed sequencing of events or special techniques including:

(1) Temperature stress control for pipe wall during installation.

(2) Minimizing distortion of steel.

(3) Monitoring pipeline temperatures during installation.

(4) Written weld repair procedures for the Work.

(5) Field coating and lining application, repair, and moisture control in accordance with Section 09970.

(6) Written consumable control procedure for welding materials demonstrating:

(a) How consumables will be stored to comply with manufacturer's written instructions.

(b) How consumables will be dried in ovens prior to use.

(c) How consumables which become wet will be reconditioned or disposed.

5. Design Calculations:

a. Calculations and/or documentation used to select the pipe grade, wall thickness, sizing of the bends, and other fabricated specials. Calculations to be sealed by a Registered Professional Engineer.

6. Reports:

a. Source Quality Control Test Reports:

(1) Hydrostatic testing.

(2) Destructive weld testing.

(3) Nondestructive weld testing.

(4) Coating and lining factory site visit letter by qualified manufacturer's technical representative.

b. Field Quality Control Test Reports:

(1) Weld tests, including initial weld examination and re-examination of repaired welds, on each weld joint for the following tests, as applicable:

(a) Visual Testing (VT).

(b) Radiographic Testing (RT).

(c) Phased Array Ultrasonic Testing (PAUT).

(d) Magnetic Particle Testing (MT).

(e) Liquid Penetrant Testing (PT).

(f) Leak Testing (LT).

(2) Coating and lining site visit letter by qualified technical representative.

(3) Applicator's quality control records, including environmental conditions, dry film thickness, and adhesion tests, when requested by Engineer.

7. Field Testing Plan:

a. Submit at least 15 days prior to testing and include at least the following information:

(1) Testing dates.

(2) Piping system and sections to be tested.

(3) Method of isolation.

(4) Method of conveying water from source to system being tested.

(5) Calculation of maximum allowable leakage for piping sections to be tested.

1.05 QUALITY ASSURANCE

A. Qualifications

1. Pipe Manufacturer:

a. Experienced in fabricating pipe of similar diameters, lengths, and wall thickness required for the Work.

b. Steel Pipe Fabricators Association (SPFA), Lloyd's Registry Certification, or ISO 9001 Certification.

c. Demonstrate current production capability for volume of work required for this Project.

d. Experience shall include successful fabrication to AWWA C200 standards of at least 10,000 linear feet of 4-inch to 42-inch diameter pipe, with wall thickness of 0.500 inches or greater, within past 5-year period.

e. Experience shall be applicable to fabrication plant facilities and personnel, not company or corporation that currently owns fabrication facility or employs personnel.

2. Fittings and Specials Fabricator:

a. Experienced in fabricating fittings and specials of similar diameters and wall thickness required for the Work.

b. Steel Pipe Fabricators Association (SPFA), Lloyd's Registry Certification, or ISO 9000 Certification.

c. Demonstrate current production capability for volume of work required for this Project.

d. Experience shall include successful fabrication to AWWA C200/C208 standards of at least 100 fittings of 4-inch to 42-inch diameter pipe, with wall thickness 0.500 inch or greater, within past 5-year period.

e. Experience shall be applicable to fabrication shop facilities and personnel, not company or corporation that currently owns fabrication facility or employs personnel.

3. Welders and Welding Operators:

a. Shop and Field Welders: In accordance with ASME BPVC.IX. Acceptance criteria based on ASME BPVC.VIII.1.

b. Non-Pressure-Boundary Field Welders: In accordance with AWS D1.1/D1.1M.

4. Certified Welding Inspector (CWI):

a. For Shop and Field Welding, certified welding inspectors shall be qualified per AWS QC1 with knowledge of appropriate welding code for the Work.

5. NDT Quality Control Personnel:

a. Nondestructive testing quality control personnel shall be qualified to either Level II or Level III per ASNT Recommended Practice No. SNT-TC-1A.

B. Field Welder Qualifications and Testing

1. Field welding procedures, welders, and welding operators shall be qualified in accordance with ASME BPVC.IX. Qualifications shall be in accordance with all-position pipe tests as defined in ASME BPVC.IX. Acceptance criteria based on ASME BPVC.VIII.1.

2. Non-Pressure-Boundary Field welding procedures, welders, and welding operators shall be qualified in accordance with AWS D1.1/D1.1M. Qualifications shall be in accordance with all-position pipe tests as defined in Section 4 of AWS D1.1/D1.1M.

C. Certified Welding Inspector (CWI) for Field Welding

1. Contractor shall provide CWI for field quality control and testing of all field welds. Owner reserves the right to hire a third-party CWI for testing on their behalf.

D. Pipe Manufacturing and Material Testing:

1. Shop Hydrostatic Pressure Test:

a. All stainless steel pipe, steel pipe, and the steel pipe manifold shall be hydrostatically shop tested prior to shipment in accordance with ASCE MOP 79:

(1) The hydrostatic test pressure shall be at 1.5 times the design working water pressure.

(2) The hydrostatic test shall be performed for at least 5 minutes with no loss of pressure. After 5 minutes, release the pressure, then reapply the test pressure while the pipe is observed for leaks.

b. General: Unless specified otherwise, testing of pipe, fittings, and specials shall be performed before lining and coating is applied.

c. Field-Fabricated Fittings and Specials: Hydrostatically test field-fabricated fittings and specials to the design static pressure.

2. Shop Nondestructive Testing

a. Welds: 100 percent visually examined by CWI to criteria in ASME BPVC.VIII.1.

b. Butt Joint Welds: 100 percent phased array ultrasonically examine in accordance with ASME BPVC.VIII.1 and/or radiographically examine in accordance with ASME BPVC VIII.1, UW 52.

c. Fillet Welds: 100 percent examine using magnetic particle inspection method in accordance with ASME BPVC.VIII.1.

E. Prefabrication Meeting: Hold prior to fabrication of pipe, fittings, or specials between representatives of Owner, Contractor, Engineer, and MPS to review the following:

1. Project scope.

2. Submittal requirements.

3. Testing.

4. Inspection responsibilities.

5. Shop welding requirements.

6. Field welding requirements.

7. Shop and field coating and lining requirements.

8. Production and delivery schedule.

9. Other issues pertinent to the Work.

F. Inspection of Coating and Lining Application: Inspection requirements in accordance with Section 09970.

G. Onsite Observation of Pipe Manufacturer's Field Service Representative: The MPS shall make available an experienced staff member to be onsite when requested by Contractor and/or Engineer. Manufacturer's Field Services shall include a minimum of 2 person-days. MPS will be provided a minimum of 48-hour prior notification for field services. The staff member's duties shall include, but not be limited to the following:

1. Train Contractor's pipe installation crews.

2. Inspect pipe upon delivery to site.

3. Observe pipe, fittings, and specials handling, moving, storage, and hoisting operations.

4. Report any concerns to the Engineer's onsite observer.

5. Answer questions and provide assistance to the Engineer and the Contractor.

1.06 DELIVERY, HANDLING, AND STORAGE

A. Delivery

1. Securely bulkhead or otherwise seal ends of pipe, specials, and fittings prior to loading at manufacturing site.

2. Pipe ends shall remain sealed until installation.

3. Unload pipe, fittings, and specials using equipment and methods as approved by the MPS and in accordance with MPS pipe handling submittal.

4. Inspect each pipe and fitting for damage. Remove or smooth out any burrs, gouges, weld splatter or other small defects prior to laying the pipe.

5. Damage to pipe, fittings, or specials, including linings and coatings, found upon delivery to jobsite shall be repaired or removed from site and replaced at no increased cost to Owner.

B. Storage

1. Support pipe securely to prevent accidental rolling and to avoid contact with mud, water, or other deleterious materials. Support on sand or earth berms free of frozen material and rock exceeding 3 inches in diameter.

2. Carefully handle and protect pipe, fittings, and specials against damage to lining and coating/interior and exterior surfaces, impact shocks, and free fall. Pipe handling equipment and methods shall be submitted and accepted by Engineer. Do not place pipe directly on rough ground but support at the 1/3 and 2/3 points along the length of the pipe section in a manner which will protect the pipe against injury whenever stored at the trench site or elsewhere.

3. Damage to pipe, fittings, or specials, including linings and coatings, found in stored pipe shall be repaired in accordance with manufacturer's instructions or removed from site and replaced at no increased cost to Owner.

4. Gasket Storage: Store gaskets in cool, well-ventilated place, and do not expose to direct rays of sun. Do not allow contact with oils, fuels, petroleum, or solvents.

1.07 SEQUENCING AND SCHEDULING

A. Notify Engineer in writing of the following pipe manufacturing events:

1. Pipe Manufacturing: Not less than 14 days prior to starting.

2. Not less than 5 days prior to start of each of the following:

a. Welding of specials.

b. Coating application.

c. Lining application

d. Shop hydrostatic testing.

PART 2 - PRODUCTS

2.01 GENERAL:

A. Approved Manufacturers:

1. Thompson Pipe Group

2. Northwest Pipe

3. Mid America Pipe

4. American Spiral Weld

5. Approved Equal

B. Manufacture of pipe and fabricated specials shall be under the direction and management of one steel pipe supplier only. This does not prevent a separate supplier from

manufacturing specials or fittings; however, all Work shall be directed by the MPS. The responsibility of the MPS shall include, at a minimum:

1. Ensure pipe, fittings, manhole and specials are being manufactured in full accordance with the Specifications and Drawings.

2. Manage the design and fabrication of the pipe and specials.

3. Prepare and submit submittal information and shop drawings.

4. Make any corrections that may be required to the submittal information and shop drawings.

5. Certify that the pipe and specials have been manufactured in accordance with the Specifications and Drawings.

C. Steel pipe, fittings, and specials shall be manufactured, tested, inspected, and marked to comply with AWWA M11, AWWA C200, AWWA C208, and additional requirements of these Contract Documents, as applicable. The pipe and fittings shall be of diameter and wall thickness as indicated on the Drawings.

D. Joint Design: Complete joint penetration (CJP) butt-welded joints shall be used on all pipe and fittings. Butt-strap closure joints shall not be allowed.

E. Shop-applied interior linings and exterior coatings shall be held back from the ends of the pipe a minimum of 4 inches for welded joints. Otherwise, linings and coatings shall be held back as recommended by the manufacturer.

F. Submit design calculations to the Engineer for review prior to manufacture of steel pipe fabricated specials.

G. Design temporary test bulkheads and temporary dished heads for field test pressure in accordance with ASME BPVC.VIII.1.

H. Interior lining materials furnished shall be NSF 61 approved for use with potable water.

2.02 PIPE AND FITTING DESIGN

A. Regardless of selected pipe material, design and fabrication process and code requirements stated in these Specifications, pipe wall thickness shall be designed and checked in accordance with the following criteria for internal loading conditions.

B. Conditions of service: The piping and all specials and fittings subject to the full internal pressure shall be designed to the following conditions:

1. Static Pressure: 200 psig.

2. Design Pressure including surge allowance: 234 psig.

C. Cylinder thickness for internal pressure: The following standard equation for pipe wall thickness based upon internal pressure shall be used:

$$t = \frac{pd}{2s}$$

Where:

t	=	Steel cylinder thickness in inches.
d	=	Outside pipe diameter in inches.
p	=	Internal pressure in psi.
s	=	Allowable design stress in psi.

Design criteria for determining minimum wall thickness for the pipe are based upon recommendations from AWWA M11 and ASME Boiler and Pressure Vessel Code. Minimum wall thickness shall be checked against and meet the requirements of the following two scenarios:

(1) Hoop tensile stress shall not exceed 67 percent of the minimum yield strength of the steel when internal pressure is equal to design pressure.

(2) Hoop tensile stress shall not exceed 33 percent of the minimum ultimate tensile strength of the steel when internal pressure is equal to design pressure.

Minimum wall thickness shall be checked against and meet the requirements for the minimum required thickness for handling per AWWA M11.

2.03 STEEL PIPING AND WELD MATERIALS

A. Steel for Cylinders and Fittings: The pipe shall be manufactured from pressure vessel quality killed steel with fine austenitic grain size per ASTM A20/A20M. The minimum grade steel for fabricating the 42-inch pipe fittings and the 24-inch steel pipe (located at the Energy Dissipation Valve Chamber) shall be 42 ksi yield strength, and the 24-inch stainless steel pipe (located at the Equalization Tank) grade shall be ASTM A312 TP304L S30403 stainless steel with a minimum 25 ksi yield strength as shown on the Drawings.

B. Access manholes with covers shall be as detailed on the Drawings. All threaded outlets shall be forged steel suitable to meet, at a minimum, the pressure ratings of the adjoining pipeline.

C. For steel containing greater than 0.12 weight percent carbon, the maximum carbon equivalent shall be 0.40 percent (ladle and product analysis). The carbon equivalent (CE) shall be calculated from the following equation:

$$CE(IIW) = C + \frac{Mn}{6} + \frac{(Cr + Mo + V)}{5} + \frac{(Ni + Cu)}{15}$$

D. For steel with carbon contents of 0.12 percent and below, then the Ito and Bessyo Carbon Equivalent (Pcm) for this steel shall not exceed 0.24 when calculated by the following formula:

$$CE(Pcm) = C + \frac{Si}{30} + \frac{Mn}{20} + \frac{Cu}{20} + \frac{Ni}{60} + \frac{Cr}{20} + \frac{Mo}{15} + \frac{V}{10} + 5B$$

E. Alternative Steel for Cylinders and Fittings: Alternatively, API 5L PSL1 pipe of suitable grade and wall thickness may be proposed subject to acceptance by the Engineer. If API pipe is used, the straight cans shall be manufactured at an API certified facility. Pipe shall be fabricated from plate conforming to the relevant provisions of the applicable design and manufacturing codes in these Specifications and the requirements herein.

F. Welding Materials: All electrodes for shielded metal arc welding shall be low hydrogen electrodes in hermetically sealed containers. The Contractor shall store, bake, and dry low hydrogen electrodes in accordance with the manufacturer's recommendations. Electrodes, which have become wet or damaged, shall be discarded. Rod ovens shall be provided for the storage of low hydrogen electrodes. Other welding electrodes and flux shall be stored as recommended by the manufacturer.

G. Welding Process: Welding Process- Utilize an electric arc welding process using a method which excludes the atmosphere from the molten metal for welding all structural steel. Conform to the applicable provisions of ASME BPVC.VIII.1 for all welds. Ensure all welding minimizes residual stresses, distortion, and shrinkage.

H. Filler Metal - Conform with the electrode, electrode- flux combination and grade of weld metal to the appropriate AWS specification for the base metal and welding process being utilized. Meet the requirements of ASME BPVC.VIII.1 for weld metal toughness, as applicable. Include the AWS designation of the electrodes to be used in the schedule of welding procedures. Utilize only low hydrogen electrodes for manual shielded metal-arc welding regardless of base metal thickness.

2.04 FITTINGS AND SPECIALS

A. Fabrication

1. Fabricate from materials in full conformance with requirements of these Contract Documents and AWWA M11 and AWWA C208, unless otherwise indicated.

B. 24-inch stainless steel 90-degree long radius elbows, unless otherwise indicated:

1. Mainline Pipe: Radius shall not be less than 2.5 times pipe diameter unless specifically indicated on Drawings.

C. Steel Buttweld Fittings

1. Wall thickness in accordance with ASME B36.10 and the Contract Drawings.

2. Coordinate difference in diameter convention between specials and AWWA C200/C208 pipe and fittings to provide complete piping system as shown.

2.05 DISMANTLING JOINTS

A. Approved Manufacturers and Models:

1. Romac Industries, Inc.; Model DJ400

2. JCM Industries, Inc.; Model 309

3. Smith-Blair; Model 975

B. Size: 24-inches

C. Quantity: 3

D. Material: 304 Stainless Steel

E. Pressure Rating: ASME Class 150

F. Flange Rating: ASME B16.5, Class 150

G. Type: Fully restrained dismantling joint

H. NSF 61 Compliant

2.06 TOLERANCES

A. All tolerances mentioned in ASME shall be satisfied. In addition, the offset tolerances for the pipe shall be:

1. For pipe wall thickness of 3/8-inch or less, the maximum radial offset (misalignment) shall be 0.1875 times the wall thickness or 1/16-inch, whichever is smaller.

2. For pipe wall thickness of greater than 3/8-inch, the maximum radial offset (misalignment) shall be 0.1875 times the wall thickness or 5/32-inch, whichever is smaller.

3. Finish: The pipe shall have smooth dense interior surfaces and shall be free from fractures, excessive interior surface crazing and roughness.

2.07 WELDED JOINTS

A. Shop Welded

1. Complete joint penetration (CJP) butt joints shall be used for longitudinal, girth, and spiral welds, unless otherwise indicated.

B. Preparation of Joints for Field Welding

1. Butt Joint Welded: Plain ends beveled as required by ASME B16.5, AWWA C200, and Contractor's field WPS.

2.08 COATINGS AND LININGS

A. In accordance with Section 09970.

2.09 FLANGED JOINTS

A. Flange classifications per criteria below. See Drawings for custom flange requirements.

B. Coating and linings for flanges to be in accordance with Section 09970.

C. For pipe sizes between 4-inch and 24-inch and maximum working pressures up to 285 psig:

1. Conform to ASME B16.5, Class 150 for flanges dimensions, bolting materials, and flange gaskets. Provide flanges with raised faces.

2. Do not expose ASME B16.5 flanges to test pressures greater than 150 percent of their designed pressure rating.

3. Gaskets shall conform to ASME B16.5, Nonmandatory Appendix B, Table B-1, Group 1.

a. Manufacturer: Garlock Inc. – BLUE-GARD Style 3000, or Engineer-accepted equal.

b. Provide a 1/8-inch thick ring gasket.

c. The gaskets shall be high performance gaskets rated for the design pressure and test pressure of the piping at 100 degrees Fahrenheit.

d. Gaskets shall be made from non-asbestos material.

D. For pipe sizes between 26-inch and 60-inch and maximum working pressures up to 275 psig.

1. Conform to AWWA C207, Class E for flange dimensions, bolting materials, and flange gaskets. Provide flanges with flat faces.

2. Do not expose AWWA C207 flanges to test pressures greater than 150 percent of their designed pressure rating.

3. Gaskets shall conform to AWWA C207, Section 4.1.5, Table 1.

a. Manufacturer: Garlock Inc. – BLUE-GARD Style 3000, or Engineer-accepted equal.

b. Provide a 1/8-inch thick ring gasket.

c. The gaskets shall be high performance gaskets rated for the design pressure and test pressure of the piping at 100 degrees Fahrenheit.

d. Gaskets shall be made from non-asbestos material.

E. Fasteners:

a. Bolts, studs, and nuts shall be selected based on the following flange interfaces:

(1) 42-inch carbon steel to carbon steel flanges: ASTM A193, Grade B7 studs, ASTM A194 Grade 2H, heavy hex nuts, and ASTM F436 washers.

(2) 24-inch carbon steel to carbon steel flanges: ASTM A193, Grade B7 studs, ASTM A194 Grade 2H, heavy hex nuts, and ASTM F436 washers.

(3) 24-inch carbon steel to stainless steel flanges: ASTM A193, Grade B7 studs, ASTM A194 Grade 2H, heavy hex nuts, and insulating flange kit.

(4) 24-inch stainless steel to stainless steel flanges: ASTM A193 Grade B6 studs, ASTM F468 silicon bronze nuts, and stainless steel washers.

b. Bolts and studs shall extend through the nuts a minimum of 1/4-inch

c. Washer material shall be hardened and match the flange bolt material

d. Washers shall be provided for each nut and/or bolt head.

e. Flange bolts shall be torqued in the sequence and torque steps recommended by the flange gasket manufacturer.

F. INSULATING FLANGE KITS

1. Approved Manufacturers:

a. GPT Industries

b. Pipeline Seal and Insulator Inc.

c. Or Equal

2. Provide dielectric flange insulating kits where indicated on the Drawings including:

a. Flat Face Flange Interfaces

(1) Insulating Gasket: Type “E” phenolic full face gasket (flat face)

(2) Insulating Bolt Sleeve: Single one-piece sleeve and washer type made of Minlon or acetal resin plastic, fitting within the bolt facing of the flange, and allowing the standard size bolt or stud for the flange to be inserted.

(3) Steel backing washers: 1/8" thick, cadmium plated, hot rolled steel and fitting within the bolt facing on the flange.

b. Raised Face Flange Interfaces

(1) Insulating Gasket: Type “F” phenolic ring gasket (raised face)

(2) Insulating Bolt Sleeve: Single one-piece sleeve and washer type made of Minlon or acetal resin plastic, fitting within the bolt facing of the flange, and allowing the standard size bolt or stud for the flange to be inserted.

(3) Steel backing washers: 1/8" thick, cadmium plated, hot rolled steel and fitting within the bolt facing on the flange.

(4) Flange Protector with safety relief vent, protection caps, and corrosion inhibiting grease.

(a) Kleerband or approved equivalent.

PART 3 - EXECUTION

3.01 GENERAL:

A. Install all piping, fittings, and specials complete with jointing materials, accessories, anchors, and other appurtenances in accordance with the manufacture’s recommendations and the Contract Documents.

3.02 INSTALLATION OF PIPING, FITTINGS, AND SPECIALS

A. Proceed with installation of pipe and valve supports only after required structural work has been completed and concrete has reached 3000 psi compressive strength. Care shall be taken not to bump or otherwise damage new concrete.

B. Where temporary supports are used, provide adequate temporary supports to prevent shifting or distortion of piping.

C. Before assembly, remove debris from inside piping, fittings, and specials.

D. Before flange pieces are assembled, remove rust resistant coating from machined surfaces, clean gaskets, and smooth burrs. Mate up flanged joints tight and prevent strain upon valves or other pieces of equipment.

E. Examine pieces for damage. Do not install pieces that are damaged according to Engineer. If any damaged piece should be discovered after having been installed, remove and replace with a sound piece at no additional cost to Owner.

F. Handle piping with equipment designed to prevent damage to the coating as approved in the pipe handling submittal.

3.03 JOINTING

A. Flanged Joints

1. Before the joint is assembled, the flange faces shall be thoroughly cleaned of all foreign material.

2. The gasket shall be centered and the connecting flanges drawn up watertight without unnecessarily stressing the flanges.

3. All bolts shall be tightened in a progressive diametrically opposite sequence and torqued with a suitable, approved and calibrated torque wrench.

4. Torque values shall be as recommended by the pipe manufacturer.

5. All clamping torque shall be applied to the nuts only.

B. Welded Joints

1. Perform joint welding as shown in Contract Drawings and in accordance with ASME BPVC.VIII.1.

2. Perform welding under the supervision of CWI.

3. Determine preheat and interpass temperature requirements for unlisted base metals in accordance with ASME BPVC.VIII.1.

4. Repair, redo, and retest rejectable weld defects until sound weld metal has been deposited in accordance with appropriate welding codes.

5. Where exterior welds are performed, provide adequate space for welding and inspection of the joints.

6. An 18-inch (minimum) wide strip of heat-resistant material shall be draped over the top half of the pipe on each side of coating holdback during welding to avoid

damage to the coating by weld spatter. No welding ground shall be attached to the coated part of the pipe.

7. Prior to initiating welding operations, the pipe and pipe joint shall be properly positioned using line-up clamps so that, in the finished joint, the abutting pipe section shall not be misaligned by more than the tolerances specified in this Specification. If line-up clamps are not possible, tack welds shall be used for positioning the pipe.

8. Tack welds, which do not become an integral part of the weld shall be removed, the surface ground smooth, and the area visually inspected. All tack welding and welding of temporary attachments shall be performed using qualified welding procedures and qualified welders.

9. Prior to initiating welding operations, remove any tack welds or joint stops used to position the pipe during laying.

10. The Contractor shall schedule welding such that the time between each pass on a joint is held to a minimum, especially the time between the root pass and hot pass. This practice is intended to utilize the heat input from the welding to minimize the possibility of cracking.

11. Welding shall not be performed on materials that are below a minimum of 32 degrees F. When the air or pipe temperature is below 32 degrees F, the material shall be heated to a minimum preheat temperature of 150 degrees F. The minimum temperature prior to the start of subsequent passes (interpass temperature) shall be the same as the preheat temperature.

12. When the ambient temperature is below 32 degrees F, the weld areas shall be wrapped with insulation, for a minimum of 30 minutes, whenever welding is interrupted, or the joint is finished.

13. Welding Procedures:

    a. Upon completion of each field-welded joint, the welding operator shall mark his regular identification number and the last two digits of the year the Work was completed, or the Contractor may have a records system that traces a welder's work. Steel stamping directly on piping will not be acceptable unless "low stress" die stamps, such as interrupted dot or round-nose types, are used. Stamping should be made outside the weld and heat affected zone.

    b. Test field welded joints in accordance with the requirements of this Specification. Allow testing agency access to field welded joints to perform independent NDT.

    c. Repair defective welds.

d. Following successful tests of the joint, coat the exterior joint spaces as indicated. Holiday test tape wrapped pipe, including heat shrink sleeves, as approved by the Engineer. After a successful Holiday test, backfilling may be completed.

3.04 REPAIR OF SHOP-APPLIED COATINGS AND LININGS

A. In accordance with Section 09970.

3.05 COATING AND LININGS OF FIELD-WELDED JOINTS

A. Clean and prepare surfaces to be lined and coated after installation of piping, fittings, and specials, and after all welding and weld testing has been performed in accordance with Section 09970.

B. Coat and line in accordance with Section 09970.

3.06 CORROSION CONTROL

A. Corrosion control - All non-welded joints shall be bonded as specified in accordance with Section 02590 – Cathodic Protection Specification.

3.07 FIELD QUALITY CONTROL

A. Field Welding

1. Contractor's CWI shall VT inspect all welds (100 percent inspection) and will mark to indicate acceptance or rejection. Contractor's CWI shall perform the tests and inspections indicated in this section.

2. Inspect 100 percent of butt joint welds with full circumference PAUT and/or RT.

3. Weld Acceptance:

a. VT:

(1) Perform VT per ASME BPVC.V and acceptance per ASME BPVC.VIII.1. No surface porosity shall be permitted.

(2) Perform on all passes.

b. PAUT and RT:

(1) Perform PAUT and RT of butt welds in accordance with ASME BPVC.V and acceptance per ASME BPVC.VIII.1.

c. PT or MT:

(1) Perform on fillet welds in accordance with ASME BPVC.V and acceptance per ASME BPVC.VIII.1.

(2) Perform on all root pass welds.

(3) Acceptance shall be in accordance with VT standards specified above.

4. Contractor shall remove defective welds in manner that permits proper and complete repair by welding.

5. Caulking or peening of welds is not permitted.

6. Contractor shall pay for retesting of unsatisfactory welds at no additional cost to the Owner.

B. Field Pressure Test

1. The steel pipe, stainless steel pipe, and pipe manifold assembly shall be field hydrostatically tested after the placement of concrete embedment in accordance with these specifications. The hydrostatic test pressure shall be at the design working water pressure. The test shall be performed for at least one hour with no loss of pressure.

3.08 CONTRACT CLOSEOUT:

A. Provide in accordance with Section 01700

END OF SECTION

SECTION 15101

PROCESS VALVES AND APPURTENANCES

PART 1 - GENERAL

1.01 DESCRIPTION:

A. Provide valves and appurtenances as indicated and in compliance with Contract Documents.

1. Provide sizes and quantities as indicated or specified.

1.02 REFERENCES:

A. American Society of Mechanical Engineers (ASME):

1. B16.1: Gray Iron Pipe Flanges and Flanged Fittings Classes 25, 125, and 250.

2. B16.5: Pipe Flanges and Flanged Fittings NPS 1/2 Through NPS 24 Metric/Inch Standard.

3. B16.34: Valves – Flanged, Threaded, and Welding End

B. American Society for Testing and Materials International (ASTM):

1. A351: Standard Specification for Castings, Austenitic, for Pressure-Containing Parts

2. A536: Standard Specification for Ductile Iron Castings.

C. American Water Works Association (AWWA):

1. C111: Rubber-Gasket Joints for Ductile-Iron Pressure Pipe and Fittings

2. C515: Reduced-Wall, Resilient-Seated Gate Valves for Water Supply Service.

3. C542: Electric Motor Actuators for Valves and Slides Gates

4. C550: Protective Interior Coatings for Valves and Hydrants

D. National Sanitation Foundation International (NSF):

1. 61: Drinking Water System Components – Health Effects

E. National Electrical Manufacturers Association (NEMA):

1. MG-1: Motors and Generators

1.03 SUBMITTALS:

A. Submit the following in accordance with Section 01300:

1. Data, regarding valve characteristics and performance including Cv.

2. Shop drawings including a plan, elevation, and details for valves and any appurtenances.

3. Manufacturer's literature as needed to supplement certified data.

4. Operating and maintenance instructions and parts lists.

5. Listing of reference installations as specified with contact names and telephone numbers.

6. Valve shop test results.

7. Qualifications of field service technician.

8. Shop and Field inspections reports.

9. List of recommended spare parts other than those specified.

10. Recommendations for short and long term storage.

11. Special tools.

12. Shop and field testing procedures and equipment to be used.

13. Number of service technician days provided and per diem field service rate.

14. Manufacturer’s product data and specifications for shop painting.

15. Provide a listing of the materials recommended for each service specified and indicated. Provide documentation showing compatibility with process fluid and service specified and indicated.

16. The latest ISO 9001 series certification or quality system plan.

17. Material Certification:

a. Provide certification from the equipment manufacturer that the materials of construction specified are recommended and suitable for the service conditions specified and indicated. If materials other than those specified are proposed based on incompatibility with the service conditions, provide technical data and certification that the proposed materials are recommended and suitable for the service conditions specified and indicated including an installation list of a minimum of five (5) installations in operation for a

minimum of five (5) years. Provide proposed materials at no additional cost to the Owner.

b. Where materials are not specified, provide technical data and certification that the proposed materials are recommended and suitable for the service conditions specified and indicated.

1.04 QUALITY ASSURANCE:

A. Comply with the requirements specified in Section 01400.

B. Provide enclosures for the area classifications specified and indicated.

C. Contractor responsible for verifying outside diameter of pipe to be tapped.

D. Services of Manufacturer's Representative as stated in Section 01400 and specified herein.

E. Manufacturer of valve shall have a minimum of five (5) operating installations with valves of the size specified and in the same service as specified operating for not less than five (5) years.

1.05 DELIVERY, STORAGE AND HANDLING:

A. Comply with the requirements specified in Section 01610 and as specified herein.

PART 2 - MATERIALS

2.01 KNIFE GATE VALVES – NON-RISING TYPE

A. Provide in accordance with Section 15114.

2.02 AXIAL FLOW CONTROL VALVES

A. Provide in accordance with Section 15110.

2.03 RESILIENT SEAT GATE VALVES (DIRECT BURY):

A. Approved Manufacturers:

1. J&S

2. Kennedy.

3. American.

B. General:

1. Provide Resilient Seat Gate Valves, Non-Rising Stem (NRS) type, in accordance with AWWA C515.

2. Provide resilient seat gate valves for all quantity, sizes, and end connections as indicated on the Drawings.

3. Provide valves suitable for direct bury installation.

4. Provide valves that conform to NSF 61.

C. Materials:

1. Body and Bonnet: ASTM A536 ductile iron.

2. Wedge: ASTM A536 ductile iron encapsulated with EPDM.

3. Provide all other materials as specified in AWWA C515. Working water pressure:

Valve Size		**Pressure Rating**	
inch	**mm**	**psi**	**kPa**
3 to 16	75 to 400	250	1750

4. Provide flanged and/or mechanical joint ends as shown on Drawings.

5. Provide gate boxes, steel extension stems or universal-joint operating rods with 2-in square operating nuts at upper end with coupling connected to valve stem to bring to operating nut near ground surface as shown in Drawings.

6. Provide counterclockwise rotation to open valves.

7. Provide conventional packing or double O rings in non-rising stem valves.

8. Valves capable of being repacked or O ring replaceable while under pressure.

9. Provide Type 316 stainless steel bolts and bronze nuts for stuffing box follower.

D. Provide all gate valves with all internal and external wetted parts coated with a fusion bonded epoxy in accordance with AWWA C550.

2.04 BUTTERFLY VALVES – HIGH PERFORMANCE:

A. Provide high-performance butterfly valves as indicated on Drawings and Specifications herein.

B. Design Criteria:

1. Valve Design: ASME/ANSI B16.34, Class 150

2. Connection Design: Lug

3. Flange Design Standard: ASME/ANSI B16.5 Class 150

4. Size: 24-inch

5. NSF 61 certified.

C. Manufacturers:

1. DeZurik

2. Flowseal

3. Emerson

4. Jamesbury

D. Provide bi-directional bubble tight shut-off and suitable for dead-end service with removal of downstream flange.

E. Body: Type 316 stainless steel ASTM A351, Grade CF8M, or equivalent. The valve body shall be cast lug design.

F. Disc: Offset design with 360 degree uninterrupted spherical edge for sealing and constructed of Type 316 stainless steel ASTM A351, Grade CF8M, or equivalent.

G. Shaft: Provide blow out proof shaft. The shaft shall be Type 316 stainless steel or 2205 duplex stainless steel, or equivalent, and positively attached to disc with Type 316 stainless steel wedge pins.

H. Seats: PTFE with encapsulated Viton O-ring creating self-energized sealing capability for zero leakage.

I. Packing: Chevron design PTFE to prevent external leakage out of valve neck up to the full hydrostatic shell test pressure.

J. Electric Valve-Actuators

1. Electric valve actuators shall conform to AWWA C-542 except as modified herein and shall include the motor, motor starter, actuator unit gearing, limit switch gearing, position limit switches, controls, worm gear reducer, and handwheel as a self-contained unit. Actuator shall be rated for weatherproof NEMA IV operation and mounted in the direction as shown on the drawings. Actuator and gearboxes shall be rated at a minimum 1.5 and 2.0 times the maximum operating torque required by the valve as determined by the valve manufacturer for isolation and modulating valves respectively. Associated valve control panels and devices shall be supplied by the actuator manufacturer as specified in these Specifications and as shown in the Drawings.

a. The actuator shall be powered by, 480 volts, three-phase, 60 Hz.

b. Closing and opening time from 100% to 0% shall be completed in no less than 180 seconds.

c. Provide an integral reversing starter with three (3) automatic reset overload relays or thermal protection internal to the motor, a fused control transformer and 24 VDC power supply for internal and external control wiring. A mechanical dial position indicator, gearing and 4-20mA position feedback transmitter powered by the actuators power supply or loop powered shall be supplied. Compression type terminal strips shall be supplied for all remote actuator power, control and indication connections. Control terminals shall be rated at 300 Volts and accept an AWG 24-12 wire gauge range. Power terminals shall be rated at 600 Volts and accept an AWG 30-10 wire gauge range. The electrical compartment shall have a minimum of 3 conduit entries for power, discrete control, and instrumentation wiring. A minimum of one (1) 1-1/4-in NPT and two (2) ¾-in NPT entries are required. The termination compartment shall be sealed separately from the internal actuator controls compartment to prevent the possibility of water intrusion into the actuator's control compartment from an open conduit or other means. The actuator shall have all necessary limit, torque and control switches and other devices in accordance with current version of AWWA C-542 standard and as otherwise specified herein. The actuator shall employ a 15 minute duty rated motor and include a phase correction circuit to assure proper output drive sleeve direction for open and close operation regardless of incoming power phase sequence. A phase detector is not acceptable. Anti-condensation heaters for the motor and controls enclosure shall be supplied and wired to the customer terminal strip as shown on the drawings. Heaters shall be suited for 110VAC power. The actuator gear housing shall be either cast or ductile iron; aluminum gear housings are not acceptable. All actuator compartment fasteners shall be stainless steel. Actuators shall have a local actuator control station with Open/Stop/Close pushbuttons, and padlockable 3-position selector switch for Local-Off-Remote mode of operation. The control station shall have 2 lights for open and close. When the selector switch is in Local mode the actuator shall only be operable from the local control station, while in Remote mode it shall be only operable from SCADA or remote control. The actuator shall be equipped to accept 24 VDC remote control open, close, and stop signals.

d. Position limit switches shall be counter gear driven and be an integral part of the valve actuator. Limit switches shall be adjustable, with trip points from fully open to fully closed valve and intermediate valve positions. Gears shall not be subject to breakage or slippage due to over travel and be wired to terminal strip for remote position indication as shown on the drawings. Limit switches shall provide a minimum 8 contact development using 4 contacts with 2 rotors. Limit switches shall be independent from torque switches. Microprocessor or electronically encoded position sensors are not allowed.

e. Valve actuator shall be equipped with a mechanically coupled torque interrupt switch driven directly from the actuator's drive gear. The torque interrupt

switches shall stop the control circuit in both the opening and closing directions when valve torque overload occurs or when valves require torque seating in the closed or open position. Microprocessor or electronically encoded based torque sensors are not allowed. The torque switches shall have graduated dials in foot-pounds for both open and closed directions of travel and shall be independently adjustable, so the actuator rated output torque is not exceeded. Switch design shall permit visual verification of switch position without disassembly and require no special tools to make adjustments. A calibration tag shall be mounted near each switch correlating the dial setting with unit output torque.

f. Actuator shall be supplied with a separate 360-degree self-locking worm gear reducer. The worm shaft gear and associated gearing shall be of hardened alloy steel. The 360-degree mating worm ring gear shall be of machine cut alloy bronze to allow a new gear segment to be selected if ever required. Non-metallic or cast gearing shall not be allowed. Tapered roller bearings or combination of roller bearings and DU bearings shall be used to provide smooth rotation of the worm. All gearing shall be grease lubricated in a heavy-duty cast iron housing with o-ring and radial seals for permanent lubrication. Adjustable mechanical end stops for 90-degree service shall be supplied to provide positive protection against over travel. All fasteners for adjusting end stops locations shall be stainless steel. A separate removable valve shaft coupling shall be supplied and be splined to provide flexible gearbox mounting locations, to enable ease of installation and removal, and for ease of machining. The gearbox shall have a mechanical dial position indicator graduated in every 10% or 10-degree intervals. The mechanical dial position indicator shall be parallel to the flow direction when the valve is in the fully open position.

g. The actuator shall seal in open and close commands in both local and remote control mode of operation to allow full valve travel unless interrupted by a stop command or the actuator’s protection switches. When the valve is operated to full open or closed, jogging shall not be required, nor should it be a means of meeting open or close cycle times. The control system shall include provision to convert the controls to operate by momentary or jogging control signals.

h. The actuator shall have a capability of both manual and motorized operation; a handwheel with spindle shall be used for manual operation, which shall not rotate during motor operation. Handwheels shall be side mounted with minimum 2-inch clearance from any wiring conduit and accessories of the actuator assembly. Top mounted handwheels directly coupled to the actuator drive sleeve are not allowed. Handwheel finish shall be smooth and free of spokes and have open direction arrow indicator for counter-clockwise to open operation.

i. Provide pushbutton control station for direct mounting to the electric actuator. Three pushbuttons, or a three-position selector switch labeled “OPEN,” “CLOSED,” “STOP”; one selector switch labeled “LOCAL,” “OFF,” “REMOTE”; and two indicating lamps, RED for open and GREEN for closed, shall be furnished on the pushbutton control station. The pushbutton station shall be suitable for weatherproof service.

j. The indicating lamps shall be removable from the front of the panel. The lamps shall be rated for 120-volt, 50/60 Hertz, single-phase. The selector switch shall have a minimum of two electrically separate contacts for each position. The pushbutton and selector switch contacts shall be rated for 120-volt, 50/60 Hertz, single-phase, 10-ampere continuous current.

k. Motors shall be of high torque, totally enclosed, non-ventilated construction, with motor leads brought into the limit switch compartment without having external piping or conduit box. Motor insulation shall be NEMA Class F. Maximum motor temperature rise shall be limited to Class B insulation values in accordance with NEMA MG-1.

l. Motors shall be of sufficient size to open or close the valves against the maximum expected differential pressure when voltage to the motor terminals is 10 percent above or 20 percent below motor nameplate voltage. The motor duty rating shall be sufficient for two (2) complete OPEN-CLOSE-OPEN cycle (or reverse) without exceeding its temperature rating. Motor shall be pre-lubricated, and all bearings shall be anti-friction type.

2. Actuator manufacturers shall be Rotork, AUMA, or Limitorque.

3. Motor-actuators shall be mounted directly on the sides of the valve bodies.

4. The valve operator motor and all electrical enclosures shall be padlocking, weatherproof, NEMA Type IV, at a minimum

5. Startup kit: The actuator shall be equipped with a startup kit comprising installation instructions, electrical wiring diagram, and sufficient spare cover screws and seals to provide for loss during the commissioning period.

6. Performance Test Certificate: The actuator shall be performance-tested, and an individual certificate shall be supplied. The test equipment should simulate a valve load, and the following parameters shall be recorded:

a. Current at maximum torque setting.

b. Torque at maximum torque setting.

c. Actuator output speed or operating time.

d. In addition, test certificate should record details of the Specification, such as gear ratios for both manual and electric operation, closing direction, and wiring diagram number.

PART 3 – EXECUTION

3.01 INSTALLATION:

A. Prior to installation, protect stored valves and appurtenances from damage due to exposure to sunlight, heat, dirt, debris, freezing and thawing, vandalism, etc.

B. Clean all debris, dirt, gravel, etc, from inside of piping before placing valves in place.

C. Erect and support valves in respective positions free from distortion and strain on appurtenances during handling and installation. Inspect material for defects in workmanship and material. Clean out debris and foreign material from valve openings and seats, test operating mechanisms to check functioning, and check nuts and bolts for tightness. Repair valves and other equipment which do not operate easily or are otherwise defective at no additional cost to the Owner.

3.02 SHOP TESTING:

A. Shop testing in accordance with AWWA C515 for AWWA Gate Valves and ASME B16.34 for High-Performance Butterfly Valves.

1. Perform pressure and leakage testing for all valves provided.

2. Acceptance criteria as determined in the applicable code.

3.03 FIELD TESTING:

A. Pressure test valves with pipeline pressure testing.

B. Perform dry open-close-open cycle prior to filling the pipeline.

C. Test functions of each valve.

D. Make all adjustments necessary to place valves in specified working order at time of above tests.

E. Remove and replace valves and appurtenances that are unable to demonstrate satisfactory performance to the Engineer as outlined in the performance specification at no additional cost to the Owner.

3.04 FIELD TOUCH-UP PAINTING:

A. After installation and accepted testing by the Engineer and Construction Manager, apply touch-up paint to all scratched, abraided and damaged shop painted surfaces. Coating type and color shall match shop painting.

3.05 CONTRACT CLOSEOUT:

A. Provide in accordance with Section 01700.

END OF SECTION

SECTION 15103

STAINLESS STEEL SLIDE GATE AND APPURTENANCES

PART 1 - GENERAL

1.01 DESCRIPTION:

A. Provide and test one 60x60-inch stainless steel slide gate and appurtenances as indicated and in compliance with Contract Documents.

B. The stainless steel slide gate shall be complete with extended wall thimble, outdoor rated electric motor actuator, actuator pedestal, stem guide supports including wall mounts and arrangement, anchor bolts, and all other accessories necessary for a complete and operable installation.

C. The entire stainless steel slide gate assembly, except the electric motor actuator, shall be suitable for submersible service in raw water. The electric motor actuator shall be suitable for outdoor use.

1.02 REFERENCES:

A. ASTM International (ASTM):

1. A193: Standard Specification for Alloy-Steel and Stainless Steel Bolting for High Temperature or High Pressure Service and Other Special Purpose Applications

2. A240: Standard Specification for Chromium and Chromium-Nickel Stainless Steel Plate, Sheet, and Strip for Pressure Vessels and for General Applications

3. A276: Standard Specifications for Stainless Steel Bars and Shapes.

4. A380: Standard Practice for Cleaning, Descaling, and Passivation of Stainless Steel Parts, Equipment, and Systems

5. B584: Standard Specification for Copper Alloy Sand Castings for General Applications.

6. D2000: Standard Classification System for Rubber Products in Automotive Applications.

7. D4020: Standard Specification for Ultra-High-Molecular-Weight Polyethylene Molding and Extrusion Materials

8. F468: Standard Specification for Nonferrous Bolts, Hex Cap Screws, Socket Head Cap Screws, and Studs for General Use

B. American Welding Society (AWS):

1. D1.6: Structural Welding Code – Stainless Steel

C. American Water Works Association (AWWA):

1. C207: Steel Pipe Flanges for Waterworks Service, Sizes 4 In. Through 144 In (100 mm Through 3,600 mm)

2. C561: Fabricated Stainless Steel Slide Gates

3. C542: Electric Motor Actuators for Valves and Slide Gates

D. NSF International (NSF):

1. 61: Drinking Water System Components Health Effects

E. International Standards Organization (ISO):

1. 9001: Quality Management Systems

F. The Society for Protective Coatings (SSPC):

1. SP6: Commercial Blast Cleaning

1.03 SUBMITTALS:

A. Submittals shall be submitted electronically and shall be in a single PDF format.

B. Submit the following in accordance with Section 01300:

1. Quality Assurance and Qualification Documents

a. Listing of reference installations as specified with contact names and telephone numbers.

b. Qualifications of Field Service Technician

2. Shop Drawings (Prior to Fabrication)

a. Certified shop and erection drawings. Contractor shall submit electronic files of the proposed equipment in the performance size and arrangements as indicated and specified.

b. Shop drawing data for accessory items.

c. Certified drawings of the slide gate including electric actuator and parts lists. Details on seating, gate and stem guides, and wedges shall be provided.

d. Provide a layout drawing, plan and section showing orientation of gate and operator and nearest obstructions for each gate.

e. Actuator sizing calculations shall be provided to verify submitted products. Buckling calculations shall be performed and submitted to verify adequacy of stem design.

3. Product Data

a. Manufacturer’s product data and specifications for shop painting.

b. Manufacturer's literature as needed to supplement certified data.

c. Submit product data simultaneously with shop drawing submittal.

4. Operations and Maintenance Manual

a. Operating and maintenance instructions and parts lists.

b. Shop and field testing procedures and equipment to be used.

c. Gate name, model, and size

d. Gate pressure and temperature rating

e. Gate material of construction and parts

f. Gate dimensions and weight

g. Gate coating

h. Copies of all approved data and drawings.

i. Gate assembly drawings showing relationship of operator, stem extensions, and operating nuts.

j. Gate operator including size, manufacture, model number, and mounting.

k. Gate operator orientation, operator type, designed rim pull force, and number of turns to close

l. Manufacturer’s installation instructions

5. Field Service Rates

a. Number of service person-days provided and per diem field service rate.

b. Number of service technician days provided and per diem field service rate.

6. Shop and Field Inspection Reports

   a. Shop factory test reports and certifications per API 598.

   b. Functional check.

7. Certificates and Affidavits

   a. Manufacturer's affidavit stating that gate complies with all provisions of this specification.

   b. Certified test reports covering shop performance, leakage, hydrostatic tests and as specified.

   c. Manufacturer's affidavit stating that gate furnished comply with all pertinent provisions of this specification.

   d. Where materials are not specified, provide technical data and certification that the proposed materials are recommended and suitable for the service conditions specified and indicated.

   e. Material test certificates of the gate and frame shall be provided.

   f. The most recent ISO 9001 series certification or quality system plan.

8. Recommendations

   a. List of recommended spare parts other than those specified.

   b. Supply manufacturer recommended lubricants, as applicable.

   c. Recommendations for short and long term storage.

   d. Provide a listing of the materials recommended for each service specified and indicated. Provide documentation showing compatibility with process fluid and service specified and indicated.

   e. Special tools.

9. Material Certification

1.04 QUALITY ASSURANCE AND QUALIFICATIONS:

A. Comply with the requirements specified in Section 01400. Provide enclosures for the area classifications specified and indicated.

B. Services of Manufacturer's Representative as specified herein.

C. The slide gate shall be the commercial product of one manufacturer having five (5) or more years of proven experience in the manufacture of a comparable gate for similar use.

D. The gate manufacturer shall furnish the services of an experienced erection advisor of the manufacturer during installation, final adjustment and testing of the gate.

E. The slide gate shall be manufacturer's standard cataloged product and modified to provide compliance with the drawings, specifications and the service conditions specified and indicated.

F. Shop tests as specified.

G. Services of Manufacturer's Representative as specified herein.

H. Provide services of factory-trained Service Technician, specifically trained on type of equipment specified:

1. Service Technician must be present on site for all items listed below. Person-day requirements listed are exclusive of travel time, and do not relieve Contractor of the obligation to place equipment in operation as specified.

2. Installation: Inspect; setting, leveling, alignment, field erection:

   a. [_1_] person-days.

3. Functional Testing: Calibrate, check performance, and perform a functional test. Tests to include all items specified.

   a. [_1_] person-days.

4. Field Performance Testing: Field performance test equipment specified.

   a. [_1_] person-days.

5. Vendor Training: Provide classroom and field operation and maintenance instruction including all materials, slides, videos, handouts, and preparation to lead and teach classroom sessions.

   a. [_1_] person-days.

6. Credit to the Owner, all unused service person-days specified above, at the manufacturer's published field service rate.

7. Any additional time required of the factory trained service technician to assist in placing the equipment in operation, or testing or to correct deficiencies in installation, equipment or material shall be provided at no additional cost to the Owner.

1.05 DELIVERY, STORAGE AND HANDLING:

A. Comply with the requirements specified in Section 01610.

B. Ship electric motor actuator and gate stems and guides separate from the fully assembled slide gate assembly.

C. Store materials in a secure location to permit easy access for inspection and identification. Keep all material of the ground, using pallets, platforms, or other supports. Protect stainless steel components from contamination with carbon steel, corrosion, and deterioration. Protect equipment by storing inside or cover with a tarp or other weatherproof covering.

D. All boxes, crates and packages shall be inspected by the CONTRACTOR upon delivery to the site. CONTRACTOR shall notify ENGINEER, in writing, if any loss or damage exists to equipment or if there is any deviation from the approved Shop Drawings. Replace loss or deviations and repair damage to new condition in accordance with manufacturer's instructions at no cost to OWNER.

1.06 WARRANTY

A. Comply with the requirements specified in Section 01740.

B. Furnish a 2-year warranty from the date of substantial completion for all work covered by this section.

C. There shall be no defects in material or workmanship in any items supplied.

D. The Contractor shall replace, at no cost to the Owner, any item the Contractor furnishes which fails to perform as specified during the warranty period.

PART 2 - PRODUCTS

2.01 ACCEPTABLE MANUFACTURERS:

A. Whipps

B. RW Gate Co.

C. Hydro Gate

D. Golden Harvest

E. Steel-Fab Inc.

F. Or Approved Equivalent

2.02 SLIDE GATE CONSTRUCTION:

A. The gate and appurtenances shall be the size, type, material, and construction as shown on the Drawings and specified herein.

B. Provide the slide gate and electric motor actuator in conformance with AWWA C561 and AWWA C542 as specified.

C. Slide gate parts shall be designed for and shall operate satisfactorily at any partially open position or fully open or closed position without vibrations under the following minimum seating head. Individual safety factors shall be in accordance with AWWA C561.

Quantity	Gate Width x Height (in)	Seating Head (ft)
1	60 x 60	25

D. Self-contained, rising stem, flush bottom type with self-adjusting seals.

E. Gates with adjustable wedges or wedging devices are not acceptable.

F. Provide all structural components 1/4-inch (6.3 mm) minimum thickness.

G. Gate assemblies shall be media blasted or passivated in accordance with ASTM A380 prior to shipment to remove all mill scale, weld splatter, discoloration, or other surface imperfections.

H. The gate will be operated submerged in the equalization tank.

I. Provide data plates or markings bearing serial numbers, ratings, and other essential information placed on the electric actuator pedestal. Provide all data on Type 304 stainless steel nameplates.

J. Leakage Rate:

1. Seating head and unseating head conditions: Leakage not to exceed 0.05 gpm per foot of seating perimeter.

K. Assembly to consist of the following:

1. Frame, slide, stem, seat, seals, and other miscellaneous items

2. Pedestal with electric motor actuator

3. Extended wall thimble with 60-inch AWWA C207 Class B Flange

4. 60-inch AWWA C207 Class B Blind Flange

L. Materials:

1. Frame Assembly and Retainers: ASTM A240 Type 304L stainless steel.

2. Slides and Stiffeners: ASTM A240 Type 304L stainless steel.

    a. 1/4-inch (6.3 mm) minimum thickness.

3. Seat and Seals: ASTM D4020 UHMW (Ultra-high Molecular Weight Polyethylene

4. Invert Seal for upward opening gates only: ASTM D2000 Neoprene or EPDM

5. Stems: ASTM A276 Type 304 stainless steel.

    a. Minimum diameter: 1-1/2-inch (38 mm).

6. Lift Nuts: ASTM B584 Bronze

7. Pedestal and Stem Guide Wall Brackets: ASTM A276 Type 304L stainless steel

8. Gear Operator Housing: Cast aluminum or ductile iron

9. Hardware, studs and nuts: ASTM A276 Type 304 stainless steel

10. Anchor bolts: Type 316 stainless steel. Minimum diameter of 1/2-inch (13 mm).

M. Slide:

1. Slide and reinforcing stiffeners welded to the slide.

    a. Stainless steel plate, minimum 1/4-inch (6.3 mm).

    b. Reinforcement: Provide a minimum of two horizontal stiffeners welded to the slide and two vertical stiffeners welded to outside of the horizontal stiffeners.

    c. Provide slide to engage the guide a minimum of 1 inch (25.4 mm) on each side and have a minimum material thickness of a 1/4 inch (6.3 mm),

    d. Provide the stem connector constructed of two angles or plates welded to the slide. Provide a minimum of two bolts connecting the stem to the stem connector.

    e. Perform all welding in accordance with AWS D1.6.

2. Deflection: Maximum of 1/720 of the span or 1/16 inch (1.6 mm) whichever is smaller, under design head specified.

N. Seals:

1. Provide a self-adjusting seal system suitable for the leakage, frequent cycling and velocities specified herein, and mounted such that there is no obstruction to the specified gate opening size.

2. Provide gates equipped with UHMW polyethylene seat/seals to restrict leakage and to prevent metal to metal contact between the frame and slide.

3. Extend the seat/seals to accommodate the 1.50 x the slide height with the gate in the fully open or fully closed position.

4. Provide all upward opening gates with a resilient flush bottom seal for sealing the invert of the gate.

5. Provide all seals mechanically fastened to the frame or slide, force fit seals or seals attached with adhesive are not acceptable.

6. Provide all seats and seals to be field replaceable without the need to remove grout or concrete and without the need to remove the frame from the wall or wall thimble.

7. Gates using "J" or "P" seals are not acceptable.

O. Frames:

1. Provide frame assembly including guide members, invert members and yoke members constructed of formed stainless steel plate with a minimum thickness of 1/4-inch (6.3 mm).

2. Provide gussets to support the guide members for unseating gates as required by the design head specified and indicated.

   a. Provide gussets extended to support the outer portion of the guide assembly and positioned to transfer the load to the anchor bolts or the wall thimble studs.

3. Provide frames for mounting type as indicated in the Slide Gate Schedule

   a. Thimble mounted with stainless steel mounting studs and mastic gasket

4. Provide thimble mounted gate with a flanged frame. Flat frame gates are not acceptable.

5. Provide guide extensions constructed of C-channel shape or similar. Angles are not acceptable guide extensions.

6. Frame Guides and Invert Members: Provide frames as a unitized one-piece, fully welded assembly.

   a. Bolt together two-piece guide frames are not acceptable and will not be approved.

   b. Frames that require field assembly are not acceptable unless the overall frame size exceeds a size suitable for shipment on a standard flatbed truck.

7. Provide the frame guides extending to accommodate the entire height of the slide when the slide is in the fully opened position.

8. Provide a rigid stainless steel invert member across the bottom of the opening.

P. Stems:

1. Provide a threaded operating stem to connect the operating mechanism to the slide.

2. For rising stem gates provide the threaded portion engaging the operating nut in the manual operator or motor actuator.

3. Minimum stem outside diameter of 1-1/2 inches (38 mm).

4. Stem extension pipes are not acceptable.

5. Provide the stem constructed of solid stainless steel bar for the entire length.

6. Tensile strength: Not less than 60,000 psi (4133 bar) for stems.

7. Provide the stem threaded to allow full travel of the slide unless otherwise specified or indicated.

8. *l/r* Ratio: Not to exceed 200.

9. Motor Operators: Design stems to withstand in compression 1.30 x stall torque output.

10. Provide the stem, in tension, designed to withstand a load caused by a 40 pound (18 kg) effort on the crank or handwheel without exceeding 1/5 of the ultimate tensile strength of the stem material.

11. Provide the threaded portion of the stem machined rolled or cut full depth ACME type threads with 16 micro-inch or better finish. Stub threads are not acceptable.

12. Provide stems of more than one piece joined by bronze or stainless steel couplings with the coupling bolted to the stem.

13. Provide clear plastic covers with 1-inch (25 mm) graduations. Provide vent holes to prevent condensation.

2.03 STEM GUIDES:

A. Provide stem guides where required to maintain *l/r* of 200 or less for the unsupported length of the stem

B. Provide stem guides and brackets of Type 316L stainless steel.

1. Adjustable in two directions

2. Minimum Thickness: 1/4-inch (6.3 mm).

3. Bushings: UHMW or bronze

2.04 WALL THIMBLE:

A. Provide "E" type extended wall thimble.

B. Provide "E" thimble as shown on Drawings. The thimble length shall be as shown on the Drawings.

1. Provide 60-inch 304 Stainless Steel AWWA C207 Class B flange at the downstream end of wall thimble.

2. Provide one 60-inch 304 Stainless Steel AWWA C207 Class B blind flange.

3. For the blind flange connection, provide ASTM A193, Grade B6 stainless steel studs with ASTM F468 silicon bronze nuts and 304 stainless steel washers.

4. For the blind flange connection, provide gasket in conformance with AWWA C207, Section 4.1.5, Table 1.

a. Manufacturer: Garlock Inc. – BLUE-GARD Style 3000, or Engineer-accepted equal.

b. Provide a 1/8-inch-thick ring gasket.

c. The gaskets shall be high performance gaskets rated for the design pressure and test pressure of the piping at 100 degrees Fahrenheit

d. Gaskets shall be made from non-asbestos material.

C. Provide a water stop continuously welded or stitch welded and sealed on both sides around the periphery of the thimble in accordance with AWS D1.6.

D. Provide wall thimble of fabricated Type 304L stainless steel construction of adequate section to withstand all operational and installation stresses.

1. Minimum thickness including front face: 1/4-inch (6.3 mm).

E. Provide the thimble square and plumb and the front face sufficiently flat to provide a mounting surface for the gate frame to achieve the specified leakage rate.

F. Provide the face of the wall thimble machined if recommended by the gate manufacturer. If the wall thimble is to be machined provide the front face with a minimum thickness of 1/4-inch (6.3 mm) after machining.

G. Provide a gasket or mastic to seal between the gate frame and the wall thimble.

2.05 ELECTRIC MOTOR ACTUATORS:

A. Opening and closing of the slide gate shall be by an electric actuator installed on the roof of the equalization tank, as shown in the Drawings.

B. Accepted Manufacturers:

1. Rotork

2. AUMA

3. Or approved equal.

C. Provide actuator sized to guarantee gate closure at the specified running torque and provide safety margin of motor power available for seating and unseating the gate with a supply voltage 10 percent below nominal.

D. 480V, 3 Phase, 60Hz, with integral reversing starter, local control facilities, and terminals for remote control and indication connections housed within a self-contained, sealed enclosure shall be provided. The actuator shall be capable of functioning in an ambient temperature range of -20 to +125 degrees F.

E. The actuator shall be equipped with a removable hand wheel for operation on a square nut suitable for manual/portable drill operation with a positive de-clutching mechanism to engage and disengage the hand wheel. Provide the de-clutching mechanism with a tamperproof hasp, pad-lockable when disengaged from hand operation. Hand operation shall be reasonably fast and require not more than 40 pounds of rim effort at the maximum required torque. It shall not be possible for the unit to be simultaneously in manual hand wheel and motor operation.

F. The actuator motor shall be totally enclosed and design for high torque operation.

1. Motor shall be specifically designed for slide gate service and shall be high torque, totally enclosed, non-ventilated construction, with motor leads, brought into the terminal compartment without having external piping or conduit box. Motor insulation shall be NEMA Class F. Maximum motor temperature rise shall be limited to Class B insulation values in accordance with NEMA MG-1.

2. Motor shall be of sufficient size to open or close the gate against the maximum expected head when voltage to the motor is 10 percent above or 20 percent below motor nameplate voltage. The motor duty rating shall be sufficient for two (2) complete open-close-open cycle without exceeding its temperature rating. Motors shall be pre-lubricated and all bearings shall be anti-friction type. Motor temperature shall be sensed by a thermostat embedded in in the windings to protect against overheating.

3. Provide reversed and lost phase protection.

G. The actuator shall be equipped with adjustable torque limiting switches in both the opening and closing directions. Torque limiting switch settings shall be adjustable from 40 to 100 percent rated torque.

H. The actuator shall be provided with geared limit switches that will provide two (2) normally open and two (2) normally closed switches in both directions of travel. The limit switches shall be rated 120VAC, 30VDC, 5A.

I. The actuator enclosure shall be provided with a 120VAC heating element (if required) for continuous operation and sized to prevent condensation within the actuator enclosure. The heater, if required, shall be powered by a separate power supply, independent of the actuator power supply.

J. Provide a reversing motor starter and three overload relays. The reversing motor starter shall be rated for at least 1200 starts per hour.

K. The actuator enclosure shall be provided with a control transformer. The control transformer shall be fed from the incoming three phase power. The control transformer shall have the necessary voltage adjusting taps and be adequately rated to provide power to the actuator control and indication circuits. The primary and secondary windings shall be protected with suitable rated fuses.

L. Indicators:

1. Digital position indicator with gate position display in percent from fully open to fully closed in 1 percent increments.

2. A mechanical position indicator shall be provided in a clearly visible location on the enclosure.

M. Selector switches:

1. Open, Close, Stop control switch with at least two contacts in the Open and Close positions.

2. Local, Off, Remote mode switch with at least two contacts in the Local and Remote positions.

3. Provide an absolute current position transmitter for remote position indication. The current position transmitter shall have a 4-20 mA output capable of driving a 1200 ohm load. The 4 to 20mA output shall be calibrated for 0 to 100 percent gate position.

4. Provide terminal block connections for external remote open and close connections, and 4-20mA analog position indication connections.

N. Actuator data capable of downloading to a handheld device (PDA) operational settings and readings, torque curves, etc. Indicate stall torque loading multipliers should torque switches fail.

PART 3 - EXECUTION

3.01 SHOP ASSEMBLY AND TESTS

A. Owner or Engineer shall have free entry at all times while tests are being conducted to ascertain that materials being furnished are in accordance with the Specifications. Contractor shall notify the Owner a minimum of 14 days in advance of shop tests or inspection so that Engineer may, at his option, witness the tests. In the event of a test failure, Owner shall decide for Contractor to either pay the costs for any additional trips by the Engineer to manufacturer's plant or the cost to retain and independent Testing and Inspection Consultant firm acceptable to the Owner, to witness and document the successful completion of all required factory testing.

B. The Contractor shall provide test procedures for review, at least thirty (30) days prior to the first test period, so that all operational and performance requirements can be tested and verified in the manufacturer's facility.

C. Adjustments shall be made as required until operations are satisfactory.

D. All lubricating grease and oil required for performance of the tests shall be furnished by the Contractor.

E. Shop assembled components shall be inspected for accurate fit. Sealing, guiding, and connecting surfaces shall be inspected to determine if their planes are true, parallel, and in uniform contact with opposing surfaces.

F. The gate frame and slide, exclusive of anchor bolts, shall be completely shop assembled for transporting as a single unit, without disassembly, except as otherwise authorized by the Engineer.

G. The gate shall be completely shop assembled, including the seal bars, along with the gate frame.

H. Suitable timber wedges and tack-welded braces shall be provided to prevent damage during transport.

3.02 COATING

A. Electric motor actuator shall be blast cleaned to SSPC SP 6/NACE No. 3 requirements and be dry and free of grease before coating.

B. All wetted surfaces shall conform to NSF 61 requirements.

3.03 INSTALLATION:

A. The gate frame, gate, operator, and all accessories shall be furnished and installed by the Contractor in accordance with the gate manufacturer's installation procedures, as approved by the Engineer.

B. The gate shall be assembled and installed in accordance with the details shown on the approved shop drawings.

C. Handling, storing, and installing of all equipment shall be the Contractor's responsibility and shall be in accordance with the instructions furnished by the gate manufacturer.

D. The wall thimble and any required anchor bolts shall be embedded in the initial concrete placement. Grouting and/or anchoring of the wall thimble after placement of the concrete onto which the gate is mounted will not be permitted.

E. The wall thimble shall be positioned accurately and supported to prevent shifting during the placement of the surrounding concrete and braced both horizontally and vertically to prevent distortion. Concrete shall be placed carefully to provide a good bond to the thimble without voids.

F. Frame members shall be assembled, placed into position, and brought to line and grade within the specified tolerances and firmly secured in place.

G. Alignment bolts, when provided, shall be spotted with templates so that subsequent bending or forcing of bolts is not required in order to match them with the corresponding holes in the frame.

H. Connection to the alignment bolts shall be adjusted and firmly tightened to hold the frame members securely in position while concrete is being placed in block outs. Additional bracing shall be provided where necessary to ensure the required alignment.

I. Care shall be taken to ensure that all installation tolerances as approved by the Engineer and required for the satisfactory operation of the gate and operator are maintained.

J. Care shall be taken during the mounting of the gate to avoid warping the gate frame.

K. When the sliding surfaces rest on the frame seats under pressure, there shall be uniform bearing along their entire length.

L. Joints shall be watertight where required.

M. Special care shall be taken to ensure that the actuator is accurately aligned with the gate.

N. During construction, the mating surfaces of the wall thimbles shall be protected from concrete spillage. Tapped holes shall be plugged for protection during concreting operations.

3.04 FIELD TESTING:

A. The gate shall be field tested as follows:

1. Dry Test:

a. The gate shall be operated through two (2) complete cycles using the electric motor actuator to ensure that it meets the requirements in all aspects and is suitable for performing the work intended. Measure and record the torque and amperage required for gate operation. Operate the slide gate 3 inches in each direction, using the handwheel on the electric motor actuator.

b. Adjustments necessary to achieve the above shall be made where required. All gate and stem guide support bolts shall be field inspected to verify they have been installed to the correct torque.

c. Smooth travel of the gate; operation of the position indicator; vibration free actuator operation; and no binding of, or side thrust on, the operating stem.

2. Wet Test:

a. The gate shall be subjected to leakage and operational wet tests. The maximum seating head leakage at normal headwater pool elevation shall not exceed 0.05 gpm per foot. There shall be no leakage between the gate frame and wall thimble, and the wall thimble and concrete. Measure and record the torque and amperage required for gate operation.

3.05 CLEANING AND FINAL ADJUSTMENTS

A. After final testing is completed, the entire gate assembly and operator shall be thoroughly cleaned. Particular attention shall be paid to bearing, sliding, and sealing surfaces.

B. Coated surfaces shall be repaired where necessary with the manufacturer’s standard coating repair kit.

C. The gate and operator shall operate smoothly and satisfactorily and meet all requirements of these Specifications. All defects or deficiencies shall be corrected at the Contractor's expense.

3.06 CONTRACT CLOSEOUT:

A. Provide in accordance with Section 01700.

END OF SECTION

SECTION 15107

BASKET STRAINERS AND APPURTENANCES

PART 1 - GENERAL

1.01 DESCRIPTION:

A. Provide and test vertical basket strainers and appurtenances as indicated and in compliance with Contract Documents.

1.02 REFERENCES:

A. American Society for Testing and Materials International (ASTM):

1. A36/A36M: Standard Specification for Carbon Structural Steel.

2. A105/A105M: Standard Specification for Carbon Steel Forgings for Piping Applications.

3. A106/A106M: Standard Specification for Seamless Carbon Steel Pipe for High-Temperature Service.

4. A516/A516M: Standard Specifications for Pressure Vessel Plates, Carbon Steel, for Moderate- and Lower-Temperature Service.

B. American Society of Mechanical Engineers (ASME):

1. B16.5: Pipe Flanges and Flanged Fittings NPS 1/2 Through NPS 24 Metric/Inch Standard.

2. B16.47: Large Diameter Steel Flanges NPS 26 Through NPS 60 Metric/Inch Standard.

3. B31.4: Pipeline Transportation Systems for Liquids and Slurries

1.03 SUBMITTALS:

A. Submittals shall be submitted electronically and shall be in a single PDF format.

B. Submit following submittals in accordance with Section 01300:

1. Certified shop and erection drawings. Contractor shall submit electronic files of the proposed equipment in the capacity, size and arrangement as indicated and specified.

2. Product data regarding vertical basket strainer and appurtenances :

a. Prior to fabrication and testing, provide guaranteed performance curves based on actual shop or field tests of mechanically duplicate equipment, showing they meet indicated and specified requirements for capacity and pressure drop.

(1) For units of same size and type, provide curves for a single unit only.

b. Results of shop performance tests as specified.

c. Submit curves for guaranteed performance, and shop performance tests on 8-1/2-inch by 11-inch (A4) sheets, one curve per sheet.

3. Shop drawing data for accessory items.

4. Certified setting plans, with tolerances, for anchor bolts.

5. Manufacturer's literature as needed to supplement certified data.

6. Operating and maintenance instructions and parts lists.

7. Listing of reference installations as specified with contact names and telephone numbers.

8. List of recommended spare parts other than those specified.

9. Shop and field inspection reports.

10. Strainer shop test results.

11. Qualifications of field service engineer.

12. Recommendations for short and long-term storage.

13. Shop testing procedures and equipment to be used including the details of all equipment and testing set up.

14. Field testing procedures and equipment to be used including the details and calibration certificated of all equipment.

15. Special tools, if applicable.

16. Number of service person-days provided and per diem field service rate.

17. Manufacturer’s product data and specifications for painting.

18. Provide a listing of the materials recommended for each service specified and indicated. Provide documentation showing compatibility with process fluid and service specified and indicated.

19. The latest ISO 9001 series certification.

20. Material Certification:

    a. Provide certification from the equipment manufacturer that the materials of construction specified are recommended and suitable for the service conditions specified and indicated. If materials other than those specified are proposed based on incompatibility with the service conditions, provide technical data and certification that the proposed materials are recommended and suitable for the service conditions specified and indicated including an installation list of a minimum of five (5) installations in operation for a minimum of five (5) years. Provide proposed materials at no additional cost to the Owner.

    b. Where materials are not specified, provide technical data and certification that the proposed materials are recommended and suitable for the service conditions specified and indicated.

1.04 QUALITY ASSURANCE:

A. Comply with the requirements specified in Section 01400.

B. Equipment specified shall be the product of one manufacturer.

C. Vertical basket strainers to be manufacturer’s standard cataloged product and modified to provide compliance with the drawings, specifications and the service conditions specified and indicated.

D. Welding: In accordance with the latest applicable American Welding Society Code, or equivalent.

E. Shop tests as specified.

F. The Contractor shall obtain the strainers, ball valves, differential pressure gauges, and differential pressure transmitters, regardless of manufacturer, as a complete and integrated package to insure proper coordination, compatibility, and operation of the system.

G. Services of Manufacturer's Representative as stated in Section 01400 and as specified herein.

H. Provide services of factory-trained Service Technician, specifically trained on type of equipment specified:

    1. Service Technician must be present on site for all items listed below. Person-day requirements listed are exclusive of travel time, and do not relieve Contractor of the obligation to place equipment in operation as specified.

2. Installation: Inspect location of anchor bolts; leveling, alignment, field erection; coordination of piping, electrical and miscellaneous utility connections:

   a. [_2_] person-days.

3. Functional Testing: Calibrate, check alignment and perform a functional test with water. Tests to include all items specified.

   a. [_0_] person-days.

4. Performance Testing: Field performance test equipment specified.

   a. [_0_] person-days.

5. Vendor Training: Provide classroom and field operation and maintenance instruction including all materials, slides, videos, handouts and preparation to lead and teach classroom sessions.

   a. [_1_] person-days.

6. Credit to the Owner, all unused service person-days specified above, at the manufacturer's published field service rate.

7. Any additional time required of the factory trained service technician to assist in placing the equipment in operation or testing to correct deficiencies in installation, equipment or material shall be provided at no additional cost to the Owner.

I. Manufacturer of strainers shall have a minimum of five (5) operating installations with strainers of the size specified and in the same service as specified operating for not less than five (5) years.

1.05 DELIVERY, STORAGE AND HANDLING:

A. Comply with the requirements specified in Section 01610.

PART 2 - PRODUCTS

2.01 MANUFACTURERS:

A. Weamco

B. Aitken

C. Winston/Royal Guard

D. ISLIP Flow Controls Inc.

2.02 STRAINER CONSTRUCTION:

A. Type: Fabricated Vertical Basket Strainer.

B. Strainer Working Pressure: 200 psig.

C. Design basket strainer in accordance with ASME B31.4.

D. Design inlet and outlet flanges in accordance with ASME B16.5, Class 150.

E. Design basket strainer blind flange in accordance with ASME B16.47, Class 150.

F. Design of basket strainer shall not exceed dimensions shown on Drawings.

G. Materials:

1. Body/Shell: ASTM A516, Grade 70 carbon steel or equivalent.

2. Nozzles: ASTM A105, Grade B carbon steel or equivalent.

3. Blind Flange Cover: ASTM A105 carbon steel or equivalent.

4. Flanges: ASTM A105 carbon steel or equivalent.

5. Basket Material: Type 304 or 316 stainless steel.

6. Mesh Material: Type 304 or 316 stainless steel.

7. Basket Lifting Shaft: Type 304 or 316 stainless steel.

8. Support Legs: ASTM A36 carbon steel or equivalent.

H. Provide strainer basket with 8x8 wire mesh screen with 0.047-inch wire diameter.

I. Provide basket strainer with pressure taps on inlet and outlet connections.

1. Provide small diameter pipe with physical differential pressure gauge, differential pressure transmitter, and alarm.

J. Provide one (1) 2-in (50 mm) NPT drain port with ball valve located at the lower part of the strainer body and one (1) 1-in (50 mm) NPT air vent port with manual lockable ball valve and gooseneck vent pipe attachment located on the blind flange of the strainer body.

1. Provide ball valves in accordance with Section 15400.

2. Provide drain in orientation as shown on Drawings.

2.03 STRAINER SCHEDULE

Service:	Raw Water
Tag Number:	BSR-1, BSR-2, BSR-3
Number of Units	3
Number of Spare Baskets	1
Design Codes:	Body: ASME B31.4 Flanges: ASME B16.5/ASME B16.47
Design Flow/Unit, MGD:	35 MGD
Operating Pressure, psi:	200 psi
Strainer inlet/outlet size, inch:	24 inch
Number of screens/strainer:	8x8 with 0.047” wire
Screening Media:	Wire mesh
Screening Media Opening, inch:	0.078 inch
Clean Pressure Drop at Design Flow, psi:	5 psi

2.04 SHOP TESTING:

A. Strainer Tests:

1. Perform pressure and leakage testing in accordance with ASME B31.4.

2. Provide strainers hydrostatically tested under 150 percent of specified working pressure as specified.

B. Correct or replace promptly all defects or defective equipment revealed or noted during tests at no additional cost to the Owner.

2.05 SHOP PAINTING:

A. Shop apply to all exterior ferrous surfaces manufacturer’s recommended coating.

B. Ferrous surfaces which are not to be painted shall be given a shop applied coat of grease or rust resistant coating.

C. Provide additional shop paint coating for touch-up to all surfaces after installation and testing is completed and equipment is accepted.

2.06 SPARE PARTS

A. Provide an additional strainer basket as a spare. Only provide one (1) additional basket for the three basket strainers.

PART 3 - EXECUTION

3.01 INSTALLATION:

A. Install items in accordance with manufacturer's printed instructions, as indicated and specified.

B. Install strainers with anchors as shown on Drawings. Use high grade non-shrink non-metallic grout.

3.02 SHOP TESTING:

A. Perform pressure and leakage testing in accordance with ASME B31.4.

3.03 FIELD TESTING:

A. Pressure and leakage test strainers with pipeline pressure.

B. Field testing will not be conducted without an accepted procedure, calibration certificates for all testing equipment, gauges and flow meters and a completed and signed pretesting check list.

C. After installation of strainers, and after inspection, operation, testing and adjustment have been completed by the manufacturer's field service technician, conduct running test for each strainer in presence of the Engineer and Construction Manager to determine its ability to:

1. Deliver its rated capacity under specified conditions.

2. During tests, observe and record pressure drop, flow, and pressure differential pressure switch setting (during flow testing of Mokveld Valves).

D. Immediately correct or replace all defects or defective equipment revealed by or noted during tests, at no additional cost to the Owner, and repeat tests until specified results and results acceptable to the Engineer and Construction Manager are obtained.

E. Contractor to provide all labor, piping, testing equipment, equipment, and test gauges for conducting tests.

1. Contractor shall provide calibrated test gauges for all permanently installed gauges.

a. All calibrations must be within 30 days of the field testing.

b. The testing will not be started and will not be accepted until the calibrated testing equipment stated above is operational and all certifications have been submitted.

F. Make all adjustments necessary to place equipment in specified working order at time of above tests.

G. Remove and replace all equipment that is unable to demonstrate satisfactory performance to the Engineer as outlined in the specification at no additional cost to the Owner.

3.04 FIELD TOUCH-UP PAINTING:

A. After installation and testing acceptable to the Engineer and Construction Manager, Contractor shall apply touch-up paint to all scratched, abraded and damaged shop painted surfaces. Coating type and color shall match shop painting.

3.05 CONTRACT CLOSEOUT:

A. Provide in accordance with Section 01700.

END OF SECTION

SECTION 15110

AXIAL FLOW CONTROL VALVES AND APPURTENANCES

PART 1 - GENERAL

1.01 DESCRIPTION:

A. Provide and test axial flow control valves, actuators, controls and appurtenances as indicated and in compliance with Contract Documents.

1. Provide sizes and quantity as indicated and in compliance with Contract Documents.

1.02 REFERENCES:

A. American Society of Mechanical Engineers (ASME/ANSI):

1. B16.5: Pipe Flanges and Flanged Fittings NPS 1/2 Through NPS 24 Metric/Inch Standard.

2. B16.10: Face-to-Face and End-to-End Dimensions of Valves

3. B16.34: Valves-Flanged, Threaded, and Welding End.

B. American Society for Testing and Materials International (ASTM):

C. American Society for Testing and Materials (ASTM):

1. A182, Forged or Rolled Alloy and Stainless Steel Pipe Flanges, Forged Fittings, and Valves and Parts for High-Temperature Service

2. A322, Steel Bars, Alloy, Standard Grades

3. A479, Stainless Steel Bars and Shapes for Use in Boilers and Other Pressure Vessels

4. A995, Castings, Austenitic-Ferritic (Duplex) Stainless Steel, for Pressure-Containing Parts

5. B637, Precipitation-Hardening and Cold Worked Nickel Alloy Bars, Forgings, and Forging Shock for Moderate or High Temperature Service

D. National Electrical Manufacturers Association (NEMA):

1. MG-1: Motors and Generators

E. National Sanitation Foundation International (NSF):

1. 61: Drinking Water System Components – Health Effects

1.03 SUBMITTALS:

A. Submittals shall be submitted electronically and shall be in a single PDF format.

B. Shop Drawings shall be submitted and approved within 60 days (calendar days) of receipt of Notice to Proceed.

C. Each shop drawing shall be reviewed and returned within 14 days of receipt by Contractor.

D. Submit complete product technical data in English Language and U.S. measurement units for all valve components, including actuator, gearbox, base plates, and pedestal mounting plates, if applicable.

E. Submit the following in accordance with Section 01300:

1. Acknowledgement that products submitted meet the requirements of the standards referenced.

2. Detailed Shop Drawings including the following:

a. Valve and actuator support internal and external dimensions including flange dimensions and cross section views through the valve.

b. Valve and actuator support assembly drawings.

c. Electric actuator drawings.

d. Electric actuator wiring and controls diagrams.

3. Valve design, fabrication, and performance data including the following:

a. Pressure and temperature rating.

b. Valve Bill of Materials (BOM) for all internal and external components on valve and electric actuator. Include valve component material construction, component quantity, and applicable standards.

c. Shipping and field weight, dry and full of water.

d. Manufacturer’s product data and specifications for shop painting.

e. Calculations for actuator sizing and design stresses in the major valve components.

f. Valve flow coefficient (Cv) Curve.

g. Rated maximum and minimum flow.

h. Valve performance characteristics graphs.

4. Certifications including the following:

   a. Mill certificates for major components.

   b. Actuator shop test certificate.

   c. Qualifications of field service technician.

   d. Manufacturer's ISO 9001 certification or quality system plan.

5. Valve Installation and Operations Submittals:

   a. Manufacturer's installation instructions and special tools required for installation.

   b. Manufacturer's operations and maintenance (O&M) manual.

   c. Manufacturer's recommended spare parts list.

   d. Recommendations for short and long term storage.

   e. Shop and Field inspections reports.

   f. Proposed shop and field testing procedures and forms to be used.

   g. Number of service technician days provided and per diem field service rate.

1.04 QUALITY ASSURANCE:

A. Comply with the requirements specified in Section 01400.

B. Provide enclosures for the area classifications specified and indicated.

C. Services of Manufacturer's Representative as stated in Section 01400 and specified herein.

D. Manufacturer of valves shall have a minimum of five (5) operating installations with valves of the size specified and in the same service as specified operating for not less than five (5) years.

E. Valves shall be the product of one manufacturer.

F. Valves shall be manufacturer's standard cataloged product and modified to provide compliance with the drawings, specifications and the service conditions specified and indicated.

G. Shop tests as specified.

H. The Contractor shall obtain the valves, actuators, and appurtenances from the valve manufacturer, as a complete and integrated package to insure proper coordination and compatibility and operation of the system.

I. Services of Manufacturer's Representative as stated in Section 01400 and as specified herein.

J. Provide services of factory-trained Service Technician, specifically trained on type of equipment specified:

1. Service Technician must be present on site for all items listed below. Person-day requirements listed are exclusive of travel time, and do not relieve Contractor of the obligation to place equipment in operation as specified.

2. Installation: Inspect grouting, location of anchor bolts; setting, leveling, alignment, field erection; coordination of piping, electrical and miscellaneous utility connection:

a. [_1_] person-days.

3. Functional Testing: Calibrate, check alignment and perform a functional test. Tests to include all items specified.

a. [_1_] person-days.

4. Field Performance Testing: Field performance test equipment specified.

a. [_2_] person-days.

5. Vendor Training: Provide classroom and field operation and maintenance instruction including all materials, slides, videos, handouts and preparation to lead and teach classroom sessions.

a. [_1_] person-days.

6. Credit to the Owner, all unused service person-days specified above, at the manufacturer’s published field service rate.

K. Any additional time required of the factory trained service technician to assist in placing the equipment in operation, or testing or to correct deficiencies in installation, equipment or material shall be provided at no additional cost to the Owner.

1.05 DELIVERY, STORAGE AND HANDLING:

A. Comply with the requirements specified in Section 01610 and as specified.

1.06 WARRANTY

A. Comply with the requirements specified in Section 01740 and as specified herein.

B. Furnish a 2-year warranty from the date of substantial completion for all work covered by this section.

C. There shall be no defects in material or workmanship in any items supplied.

D. The Contractor shall replace, at no cost to the Owner, any item the Contractor furnishes which fails to perform as specified during the warranty period.

PART 2 - MATERIALS

2.01 APPROVED MANUFACTURERS

A. Mokveld Valves BV – No substitutions.

2.02 AXIAL FLOW CONTROL VALVES

A. Basic Valve:

1. Type: Inline axial flow design.
2. Material: Duplex stainless steel
3. Valve body
    a. ASME B16.34, Class 150 body.
    b. ASME B16.10, Class 150 steel raised face face-to-face dimensions.
4. Valve flanges
    a. ASME B16.5, Class 150 flanges.
5. Piston
    a. Co-axially pressure balanced design with rack and pinion system.
    b. Operating torque independent of pressure differential across valve.
6. Trim Design
    a. RM100X multi-stage cage energy dissipation design.

B. Materials

1. Body, Flanges, and Inner-Body: ASTM A995 Gr. 4A UNS J92205.
2. Piston: ASTM A182 UNS S31803.
3. Piston Front: ASTM A995 Gr 4A UNS J92205.

4. Seat Ring: ASTM A182 UNS S31803.

5. Cage: ASTM A182 UNS S31803.

6. Piston Rod: ASTM B637 UNS N07718.

7. Main Seal: PTFE.

8. Piston Rod Guide: ASTM A479 UNS S31803.

9. Valve Stem: ASTM A322 UNS G41300.

10. All valve materials that will come in contact with water conveyed through the axial control valves shall be suitable for potable drinking water supply and NSF 61 compliant.

2.03 VALVE DESIGN REQUIREMENTS:

A. Size: 24 inches

B. Quantity: 3

C. Performance Criteria:

1. Maximum upstream static pressure: 200 psig.

2. Maximum transient pressure (per hydraulic model): 225 psig

3. Maximum downstream static pressure: 4 psi

4. Minimum downstream static pressure: atmosphere or slightly above.

5. Max flow through single valve: 35 Million Gallons per Day (MGD).

6. Max flow through two valves: 63 MGD, 31.5 MGD each.

7. Bubble tight shut off from upstream pressure.

8. Zero cavitation through operating range.

9. Fully retractable seat seal when the valve is in the open position.

10. Pressure and flow at Mokveld based on hydraulic model analysis for Cobble Mountain Reservoir at full capacity (HGL = 952.00ft) and half capacity (HGL = 915.40ft) for both a clean and dirty basket strainer.

Springfield	Dirty Strainer		Clean Strainer	
42” Pipe Upstream of Mokveld Manifold Flow Rate (MGD)	Reservoir at HGL 952 ft (max) Upstream Pressure (psi)	Reservoir at HGL 915.4 ft (half) Upstream Pressure (psi)	Reservoir at HGL 952 ft (max) Upstream Pressure (psi)	Reservoir at HGL 915.4 ft (half) Upstream Pressure (psi)
0 (Single Valve)	199.0	183.0	199.0	183.0
5 (Single Valve)	197.8	182.0	198.8	182.4
20 (Single Valve)	182.0	166.5	189.3	173.5
35 (Single Valve)	152.0	136.1	170.3	154.1
63 (Split between 2 Mokvelds)*	139.4	123.7	154.6	138.9
*Please note the lower upstream pressures compared to the single valve open for higher singular valve flow due to increased head loss in upstream pipe.				

D. Control

1. Electric actuator for modulating service.

2. Closing and opening time from 100% to 0% shall be completed in not less than 180 seconds.

2.04 ELECTRIC MOTOR ACTUATORS:

A. Accepted Manufacturers:

1. Rotork or AUMA.

B. Provide actuator sized to guarantee valve closure at the specified differential pressure and provide safety margin of motor power available for seating and unseating the valve sufficient to ensure torque switch trip at maximum valve torque with the supply voltage 10 percent below nominal.

C. 460V, 3 Phase, 60Hz, with integral reversing starter, local control facilities, and terminals for remote control and indication connections housed within a self-contained, sealed enclosure shall be provided. The actuator shall be capable of functioning in an ambient temperature range of -20 to +125 degrees F.

D. The actuator shall be equipped with a removable hand wheel for operation on a square nut suitable for manual/portable drill operation with a positive de-clutching mechanism to engage and disengage the hand wheel. Provide the de-clutching mechanism with a tamperproof hasp, pad-lockable when disengaged from hand operation. Hand operation

shall be reasonably fast, but not less than 180 seconds and require not more than 40 pounds of rim effort at the maximum required torque. It shall not be possible for the unit to be simultaneously in manual hand wheel and motor operation.

E. Unless otherwise specified, actuators for valves to be buried, submerged, or installed in vaults or manholes shall be sealed to withstand at least 20 feet of submergence.

F. The actuator motor shall be totally enclosed and design for high torque valve operation.

1. Motor shall be specifically designed for axial control valve service and shall be high torque, totally enclosed, non-ventilated construction, with motor leads, brought into the terminal compartment without having external piping or conduit box. Motor insulation shall be NEMA Class F. Maximum motor temperature rise shall be limited to Class B insulation values in accordance with NEMA MG-1.

2. Motor shall be of sufficient size to open or close the valve against the maximum expected head when voltage to the motor is 10 percent above or 20 percent below motor nameplate voltage. The motor duty rating shall be sufficient for two (2) complete open-close-open cycle without exceeding its temperature rating. Motors shall be pre-lubricated and all bearings shall be anti-friction type. Motor temperature shall be sensed by a thermostat embedded in in the windings to protect against overheating.

3. The motor shall have a motor duty rating of at least 30 minutes.

4. Provide reversed and lost phase protection.

G. The actuator shall be equipped with adjustable torque limiting switches in both the opening and closing directions. Torque limiting switch settings shall be adjustable from 40 to 100 percent rated torque.

H. The actuator shall be provided with geared limit switches that will provide two (2) normally open and two (2) normally closed switches in both directions of travel. The limit switches shall be rated 120VAC, 30VDC, 5A.

I. The actuator enclosure shall be provided with a 120VAC heating element for continuous operation and sized to prevent condensation within the actuator enclosure.

J. Provide a reversing motor starter and three overload relays. The reversing motor starter shall be rated for at least 100 starts per hour.

K. The actuator enclosure shall be provided with a control transformer. The control transformer shall be fed from the incoming three phase power. The control transformer shall have the necessary voltage adjusting taps and be adequately rated to provide power to the actuator control and indication circuits. The primary and secondary windings shall be protected with suitable rated fuses.

L. Indicators:

1. Digital position indicator with valve position display in percent from fully open to fully closed in 1 percent increments.

2. A mechanical position indicator shall be provided in a clearly visible location on the enclosure.

M. Selector switches:

1. Open, Close, Stop control switch with at least two contacts in the Open and Close positions.

2. Local, Off, Remote mode switch with at least two contacts in the Local and Remote positions.

3. Provide an absolute current position transmitter for remote position indication. The current position transmitter shall have a 4-20 mA output capable of driving a 1200 ohm load. The 4 to 20mA output shall be calibrated for 0 to 100 percent valve position.

4. Provide terminal block connections for external remote open and close connections, and 4-20mA analog position indication connections.

N. Actuator data capable of downloading to a handheld device, a personal digital assistant (PDA), operational settings and readings, torque curves, etc. Indicate stall torque loading multipliers should torque switches fail.

2.05 ACCESSORIES

A. Furnish any accessories and appurtenances required to provide a completely operable valve.

PART 3 - EXECUTION

3.01 SHOP TESTING:

A. Completely shop assemble the valves including any electrical components.

B. Hydrostatically shell test the valve body with the valve in the open position to 1.5 times the Class 150 pressure rating for a minimum of 10 minutes and observe for leakage in the pressure boundary. Visually detectable leakage through the pressure boundary is not acceptable. Perform pressure testing in accordance with ASME B16.34.

C. Leakage test the valves with the valve in the closed position and seats under the minimum static pressure for a minimum of 10 minutes and observe for leakage in the pressure boundary. No leakage is acceptable.

D. Once the valves have passed the above pressure and leakage tests, functionally test valves through an open-close-open cycle with the electric actuators and all controls so that each valve is tested as a complete unit. Observe if the actuator temperature increases significantly during operation.

E. Correct or replace promptly all defects or defective equipment revealed by or noted during tests at no additional cost to the Owner.

F. All factory testing shall be witnessed by the Owner.

1. Provide 45 days advanced notice of testing date for Owner to coordinate travel arrangements.

2. Owner will be present to witness all testing.

3. Documentation of all shop testing shall be signed by the manufacturer upon completion of all shop testing and provided to the shop test Owner-witness.

3.02 INSTALLATION:

A. Prior to installation, protect stored valves and appurtenances from damage due to exposure to sunlight, heat, dirt, debris, freezing and thawing, vandalism, etc.

B. Clean all debris, dirt, gravel, etc., from inside of piping before installing valves.

C. Erect and support valves in respective positions free from distortion and strain on appurtenances during handling and installation. Inspect material for defects in workmanship and material. Clean out debris and foreign material from valve openings and seats, test operating mechanisms to check functioning, and check nuts and bolts for tightness. Repair valves and other equipment which does not operate easily or are otherwise defective at no additional cost to the Owner.

D. Install valve in accordance with the valve manufacturer's installation manual.

3.03 FIELD TESTING:

A. Provide field service technician certified by both valve manufacturer and valve actuator manufacturer.

B. The Manufacturer's field service technician shall perform the following:

1. Provide written valve startup procedures to include dry valve operational test, verification of valve operation and valve control over full range of valve positions.

2. Inspect valve installation.

3. Inspect valve actuators and actuator wiring and controls provided in this specification.

4. Conduct dry valve operation for each valve to verify operation.

5. Observe pressure testing of valves using pipeline pressure.

6. Observe functional testing of valves, with valve dry, with valve charged with water but isolated, and at full system pressures, to ensure all parts are operable and valves seat properly.

7. Assist with on-site flow testing and calibration for each installed valve.

8. Supervise adjustments and installation checks:

   a. Open and close valves electrically under local manual and demonstrate that all limit switches are properly adjusted and that switch contacts are functioning properly by verifying the inputs are received at the remote input/output (RIO) panels or local control panel as appropriate.

   b. Position modulating valves electrically under local manual control and demonstrate that the valve position feedback potentiometer is properly adjusted and that the feedback signal is received at the RIO panels or local control panel as appropriate.

   c. Simulate a valve position command signal at the RIO panel or local control panel as appropriate and demonstrate that the valve is controlled to the desired position without excessive hunting.

9. Provide Owner with a written statement that the manufacturer has verified that the actuators have been installed properly, that all limit switches and position potentiometers have been properly adjusted and that the valve actuator responds correctly to the valve position command.

10. Manufacturer shall provide a Certificate of Proper Installation (COPI) to Contractor and Owner.

11. Provide two – 2-hour sessions of on-site training (total 4 hours) in valve and actuator operation and maintenance for Owner's staff after startup and commissioning.

3.04 FIELD TOUCH-UP PAINTING:

A. After installation and accepted testing by the Engineer and Construction Manager, apply touch-up paint to all scratched, abraided and damaged shop painted surfaces. Coating type and color shall match shop painting.

3.05 CONTRACT CLOSEOUT:

A. Provide in accordance with Section 01700.

END OF SECTION

SECTION 15112

SELF-CONTAINED AUTOMATIC CONTROL VALVES AND APPURTENANCES

PART 1 - GENERAL

1.01 DESCRIPTION:

A. Provide and test self-contained automatic control valves and appurtenances as indicated and in compliance with Contract Documents.

1. Provide sizes and capacities as indicated or in compliance with Contract Documents.

1.02 REFERENCES:

A. American Society of Mechanical Engineers (ASME):

1. B16.1: Standard for Cast Iron Pipe Flanges and Flanged Fittings, 125 lb.

2. B16.4: Cast-Iron Threaded Fittings, Class 125 and 250.

3. B16.42: Ductile Iron Pipe Flanges and Flanged Fittings Classes 150 and 300.

B. ASTM International (ASTM):

1. A48/A48M: Standard Specification for Gray Iron Castings.

2. A126: Standard Specification for Gray Iron Castings for Valves, Flanges and Pipe Fittings.

3. A536: Standard Specification for Ductile Iron Castings.

4. B62: Standard Specification for Composition Bronze or Ounce Metal Castings

C. American Water Works Association (AWWA):

1. C500: Metal-Seated Gate Valves for Water Supply Service.

D. NSF International (NSF):

1. 61: Drinking water system components Health effects.

1.03 SUBMITTALS:

A. Submit the following in accordance with Section 01300:

1. Data, regarding valve characteristics and performance including Cv.

2. Shop drawing data for accessory items.

3. Manufacturer's literature as needed to supplement certified data.

4. Operating and maintenance instructions and parts lists.

5. Listing of reference installations as specified with contact names and telephone numbers.

6. Valve shop test results.

7. Qualifications of field service technician.

8. Shop and Field inspections reports.

9. List of recommended spare parts other than those specified.

10. Recommendations for short and long term storage.

11. Special tools.

12. Shop and field testing procedures and equipment to be used.

13. Number of service technician days provided and per diem field service rate.

14. Manufacturer’s product data and specifications for shop painting.

15. Provide a layout drawing, plan and section showing orientation of valves and nearest obstructions for each valve.

16. Manufacturer's product data and specifications for shop coating and painting.

17. Provide a listing of the materials recommended for each service specified and indicated. Provide documentation showing compatibility with process fluid and service specified and indicated.

18. The most recent ISO 9000 series certification or quality system plan.

19. Material Certification:

    a. Provide certification from the equipment manufacturer that the materials of construction specified are recommended and suitable for the service conditions specified and indicated. If materials other than those specified are proposed based on incompatibility with the service conditions, provide

technical data and certification that the proposed materials are recommended and suitable for the service conditions specified and indicated including an installation list of a minimum of five (5) installations in operation for a minimum of five (5) years. Provide proposed materials at no additional cost to the Owner.

b. Where materials are not specified, provide technical data and certification that the proposed materials are recommended and suitable for the service conditions specified and indicated.

B. A copy of this specification section with addenda and all referenced specification sections with addenda, with each paragraph check-marked to indicate specification compliance or marked to indicate requested deviations and clarifications from the specified requirements.

1. If deviations and clarifications from the specifications are indicated, therefore requested by the Contractor, provide a detailed written justification for each deviation and clarification.

2. Failure to include a copy of the marked-up specification sections and or the detailed justifications for any requested deviation or clarification will result in submittal return without review until marked up specification and justification are resubmitted with the entire package.

1.04 SPARE PARTS:

A. Comply with requirements specified in Section 01610.

1.05 QUALITY ASSURANCE:

A. Comply with the requirements specified in Section 01400.

B. Provide enclosures for the area classifications specified and indicated.

C. Contractor responsible for verifying outside diameter of pipe to be tapped.

D. Services of Manufacturer's Representative as stated in Section 01400 and specified herein.

E. Manufacturer of valve shall have a minimum of five (5) operating installations with pumps of the size specified and in the same service as specified operating for not less than five (5) years.

1.06 DELIVERY, STORAGE AND HANDLING:

A. Comply with the requirements specified in Section 01610 and as specified.

PART 2 - MATERIALS

2.01 SELF-CONTAINED AUTOMATIC CONTROL VALVES:

A. Manufacturers:

1. Singer Valve Inc.

2. Ross Controls.

3. Golden Anderson (GA Industries).

4. Cla-Val

B. Type: Pilot operated, piston or diaphragm design, automatic valve.

1. Body Type: Globe or angle body, provide body style as indicated.

2. Provide valve that utilize line pressure as its operating source.

3. Provide valves with all necessary accessories to provide a complete operating unit.

C. Provide size and configuration as specified and indicated.

D. End Connections:

1. Valves 3-inches (80 mm) and Smaller: NPT

2. Valves 1-1/2-inches (40mm) and Larger: Flanged end connections ANSI standard B16.1 (PN10) of a class to mate with pipe flanges.

E. Diameter of Seat Opening: Equal to diameter of pipe size.

F. Provide valves designed to remove and replace all internal parts without removing the valve body from the pipeline.

G. Diaphragm style valves: Provide NSF 61 approved replaceable seals designed to prevent metal to metal contact.

1. Material: Type 316 stainless.

H. Piston style valves: Provide treated leather replaceable seals designed to prevent metal to metal contact.

1. Material: Treated leather or polyurethane seats.

I. Minimum pressure rating: 250 psi (1.7 MPa).

J. Hydrostatic test: 300 psi (2 MPa).

K. Provide a visual position indicator.

L. Materials:

1. Valve Body and Covers: A536 (65-45-12) ductile iron or ASTM A126 cast iron.

a. Diaphragm style valve cover: Provide a separate stem cap giving access to the stem for alignment check, spring installation and ease of assembly.

(1) Provide main bonnet cover and locating pins to accurately locate the main valve body.

b. Internal and External Coating: NSF 61 fusion bonded epoxy.

c. Provide two NPT connections on each side of the valve body for external control piping and provide Type 316 stainless steel plugs for all unused ports

2. Piston: ASTM B62 Bronze, for piston style valves.

3. Diaphragm: EPDM or Buna N of the rolling type design.

4. Stem: Type 316 stainless steel, for diaphragm style valves.

5. Seat Disc:

a. Valves 12-inches (300mm) and Smaller: ASTM B62 Bronze, Cast Iron, Ductile Iron or Type 316 stainless steel.

b. Valves 14-inches through 36-inches (350 through 900 mm):

(1) ASTM A126 cast iron center with ASTM B62 bronze outer ring or cast iron.

(2) One piece design in ductile iron or Type 316 stainless steel.

c. Valves 42-inches through 48-inches (1100 through 1200 mm): Cast steel, Cast Iron, Ductile Iron or Type 316 stainless steel.

6. Plates:

a. Valves 4-inches through 36-inches (100 through 900 mm): ASTM B62 bronze or ASTM A536 ductile iron (65-45-12).

b. Valves 42-inches through 48-inches (1100 through 1200 mm): Cast steel or ASTM A536 ductile iron (65-45-12).

7. Bushings:

a. Valves 4-inches through 36-inches (100 through 900 mm): ASTM B62 bronze.

b. Valves 42-inches through 48-inches (1100 through 1200 mm): Type 316 stainless steel.

8. Seat Ring, Stem Nuts, Indicator, and Seat Packing Support: Type 316 stainless steel.

9. External Control Piping, Strainers, and Valves: Type 316 stainless steel.

a. Provide tubing or hose.

M. Valve Types:

1. Pressure Reducing Valves:

a. Provide valves designed to maintain a pre-adjusted downstream pressure regardless of changes in flow rate.

b. Provide an external pilot control including an external strainer, needle valve, position indicator, gauges, and isolation ball valves.

c. Provide settings as specified and indicated.

N. Provide all valves in compliance with NSF 61 for all services.

PART 3 - EXECUTION

3.01 INSTALLATION:

A. Prior to installation, protect stored valves and appurtenances from damage due to exposure to sunlight, heat, dirt, debris, freezing and thawing, vandalism, etc.

B. Clean all debris, dirt, gravel, etc., from inside of piping before placing valves in place.

C. Erect and support valves in respective positions free from distortion and strain on appurtenances during handling and installation. Inspect material for defects in workmanship and material. Clean out debris and foreign material from valve openings and seats, test operating mechanisms to check functioning, and check nuts and bolts for

tightness. Repair, valves, and other equipment which does not operate easily or are otherwise defective at no additional cost to the Owner.

D. Set plumb and support valves in conformance with instructions of manufacturer. Shim valves mounted on face of concrete vertically and grout in place. Install valves in control piping for access.

3.02 FIELD TESTING:

A. Pressure test valves with pipeline pressure testing.

B. Test functions of each valve.

C. Make all adjustments necessary to place valves in specified working order at time of above tests.

D. Remove all replace valves and appurtenances at no additional cost to the Owner with equipment that will meet all requirements specified and indicated if unable to demonstrate to the satisfaction of the Engineer that valves will perform the service specified, indicated, and as submitted and accepted.

3.03 FIELD TOUCH-UP PAINTING:

A. After installation and accepted testing by the Engineer, apply touch-up paint to all scratched, abraided and damaged shop painted surfaces. Coating type and color shall match shop painting.

3.04 CONTRACT CLOSEOUT:

A. Provide in accordance with Section 01700.

END OF SECTION

SECTION 15114

SEVERE SERVICE KNIFE GATE VALVES AND APPURTENANCES

PART 1 - GENERAL

1.01 DESCRIPTION

A. Furnish, install, and test three (3) 24-inch severe service knife gate valves with electric motor-operated actuators and three (3) 24-inch severe service knife gate valves with manual chainwheels and appurtenances in the Energy Dissipation Valve (EDV) Chamber as indicated and in compliance with Contract Documents.

1.02 REFERENCES

A. American Petroleum Institute (API):

1. 598: Valve Inspection and Testing

B. American Society of Mechanical Engineers (ASME/ANSI):

1. B16.5: Pipe Flanges and Flanged Fittings NPS 1/2 Through NPS 24 Metric/Inch Standard

2. B16.10: Face-to-Face and End-to-End Dimensions of Valves

3. B16.34: Valves-Flanged, Threaded, and Welding End

C. American Society for Testing and Materials International (ASTM):

1. A36/A36M: Standard Specification for Carbon Structural Steel

2. A240/A240M: Standard Specification for Chromium and Chromium-Nickel Stainless Steel Plate, Sheet, and Strip for Pressure Vessels and for General Applications

3. A276: Standard Specification for Stainless Steel Bars and Shapes

4. F593: Stainless Steel Bolts, Hex Cap Screws, and Studs

5. F594: Stainless Steel Nuts

D. Manufacturers Standardization Society (MSS):

1. SP-25: Standard Marking System for Valves, Fittings, Flanges, and Unions

2. SP-55: Quality Standard for Steel Castings for Valves, Flanges, Fittings, and Other Piping Components - Visual Method for Evaluation of Surface Irregularities

E. American Water Works Association (AWWA):

1. C520: Knife Gate Valves, Sizes 2 in. (50 mm) through 96 in. (2,400 mm)

2. C542: Electric Motor Actuators for Valves and Slide Gates

F. National Electrical Manufacturers Association (NEMA):

1. MG-1: Motors and Generators

G. National Sanitation Foundation International (NSF):

1. 61: Drinking Water System Components – Health Effects

H. International Standards Organization (ISO):

1. 9001: Quality Management Systems

1.03 SUBMITTALS

A. Submittals shall be submitted electronically and shall be in a single PDF format.

B. Submit the following in accordance with Section 01300:

1. Quality Assurance and Qualification Documents

a. Listing of reference installations as specified with contact names and telephone numbers.

b. Qualifications of Field Service Technician

2. Shop Drawings

a. Certified shop and erection drawings. Contractor shall submit electronic files of the proposed equipment in the performance size and arrangements as indicated and specified.

b. Shop drawing data for accessory items.

c. Certified drawings of the valves including valve operators and parts lists.

d. Provide a layout drawing, plan and section showing orientation of valve and actuators and nearest obstructions for each valve.

e. Provide actuator sizing calculations to confirm factor of safety of design.

3. Product Data

a. Data regarding actuator and valve characteristics and performance including Cv.

b. Manufacturer’s product data and specifications for shop painting.

c. Manufacturer's literature as needed to supplement certified data.

d. Submit product data simultaneously with shop drawing submittal.

4. Operations and Maintenance Manuals

a. Operating and maintenance instructions and parts lists.

b. Shop and field test procedures and equipment to be used.

c. Valve name, model, and size

d. Valve pressure and temperature rating

e. Valve material of construction and parts

f. Valve dimensions and weight

g. Valve lining and coating

h. Valve assembly drawings showing relationship of valve handles, handwheels, stem extensions, and operating nuts.

i. Valve actuator including size, manufacture, model number, and mounting.

j. Valve operator orientation, operator type, actuator turndown ration, and number of turns to close.

k. Valve actuator manufacturer calculations in sizing operators.

l. Manufacturer’s installation instructions

5. Field Service Rates

a. Number of service person-days provided and per diem field service rate.

b. Number of service technician days provided and per diem field service rate.

6. Shop and Field Inspection Reports

   a. Shop factory test reports and certifications per API 598.

      (1) Functional check.

      (2) Shell strength and shell tightness test. Manufacturer hydrostatical test valve body to 150% of the maximum design pressure. Test seat leakage in both directions with both water and air in accordance with API 598. Zero allowable seat leakage in both directions through valve body.

7. Certificates and Affidavits

   a. Manufacturer's affidavit stating that valves comply with all provisions of this specification.

   b. Certified test reports covering shop performance, leakage, hydrostatic tests and as specified.

   c. Manufacturer's affidavit stating that valves furnished comply with all pertinent provisions of this specification.

   d. The most recent ISO 9001 series certification or quality system plan.

   e. Where materials are not specified, provide technical data and certification that the proposed materials are recommended and suitable for the service conditions specified and indicated.

8. Recommendations

   a. List of recommended spare parts other than those specified.

   b. Recommendations for short and long term storage.

   c. Supply manufacturer recommended lubricants, as applicable.

   d. Special tools.

1.04 QUALITY ASSURANCE AND QUALIFICATIONS:

A. Comply with the requirements specified in Section 01400. Provide enclosures for the area classifications specified and indicated.

B. Services of Manufacturer's Representative as specified herein.

C. Valve manufacturer must have a minimum of ten (10) years of experience with valves of the same design and size specified and larger. Provide a minimum of three (3) references of operating installations with valves of the size specified or larger and in the same service as specified operating for not less than five (5) years.

D. Valves shall be the product of one manufacturer.

E. Valves shall be manufacturer's standard cataloged product and modified to provide compliance with the drawings, specifications and the service conditions specified and indicated.

F. Shop tests as specified.

G. The Contractor shall obtain the valves, actuators, and appurtenances from the valve manufacturer, as a complete and integrated package to insure proper coordination and compatibility and operation of the system.

H. Services of Manufacturer's Representative as specified herein.

I. Provide services of factory-trained Service Technician, specifically trained on type of equipment specified:

1. Service Technician must be present on site for all items listed below. Person-day requirements listed are exclusive of travel time, and do not relieve Contractor of the obligation to place equipment in operation as specified.

2. Installation: Inspect, valve internals; setting, leveling, alignment, field erection; coordination of piping, electrical and miscellaneous utility connection:

   a. [_2_] person-days.

3. Functional Testing: Calibrate, check performance, and perform a functional test. Tests to include all items specified.

   a. [_1_] person-days.

4. Field Performance Testing: Field performance test equipment specified.

   a. [_1_] person-days.

5. Vendor Training: Provide classroom and field operation and maintenance instruction including all materials, slides, videos, handouts, and preparation to lead and teach classroom sessions.

   a. [_1_] person-days.

6. Credit to the Owner, all unused service person-days specified above, at the manufacturer's published field service rate.

J. Any additional time required of the factory trained service technician to assist in placing the equipment in operation, or testing or to correct deficiencies in installation, equipment or material shall be provided at no additional cost to the Owner.

1.05 DELIVERY, STORAGE AND HANDLING:

A. Comply with the requirements specified in Section 01610 and as specified herein.

B. The valve shall be shipped fully assembled, except that the electric motor-actuator and connecting assembly may be removed. Place the valve gate in a slightly open position for shipment.

C. Deliver materials and accessories in a clean undamaged condition. Load, transport, and unload in accordance with manufacturer instructions.

1.06 WARRANTY:

A. Comply with the requirements specified in Section 01740 and as specified herein.

B. Furnish a 2-year warranty from the date of substantial completion for all work covered by this section.

C. There shall be no defects in material or workmanship in any items supplied.

D. The Contractor shall replace, at no cost to the Owner, any item the Contractor furnishes which fails to perform as specified during the warranty period.

PART 2 - PRODUCTS

2.01 GENERAL:

A. Provide severe service knife gate valves with electric motor-operated actuators.

1. Pressure design rating shall be ASME B16.34, Class 150.

2. ASME B16.5, Class 150, raised face flanges.

3. Non-rising stem to fit in the EDV chamber with clearance as shown on Drawings.

4. Bi-directional closure capability.

5. The valves shall be able to open and close for the design pressure and flow conditions listed in the valve schedule:

Valve Tag Numbers	Electrically Operated: MOV-10911, MOV-10921, MOV-10931 Manually Operated: KGV-10910M, KGV-10920M, KGV-10930M
Service	Raw Water
Number of Valves	6 Total: 3 Carbon Steel Electrically Actuated 3 Stainless Steel Manually Operated
Maximum Pressure Differential	200 psi
Anticipated Operating Pressure (per Hydraulic Model)	187 psi
Maximum Hydrostatic Test Pressure	300 psi
Maximum Leak Test Pressure	300 psi
Fluid Temperature Range	32 – 100 °F
Ambient Temperature Range	30 – 100 °F
Valve Size	24-inch
Valve Maximum Flow Rate	35 MGD/54 cfs
Valve Opening/Closing Time with Actuator	Not less than 180 seconds
Valve Ends	Double Flanged with Flange-to-Flange Length per ASME B16.10
Flange Rating	ASME B16.5, Class 150
Flange Drilling Pattern	ASME B16.5, Class 150
Actuator Type	3 Electric Actuator 3 Handwheel

2.02 SEVERE SERVICE KNIFE GATE VALVE:

A. Manufacturers:

1. DSS Valve

2. Dezurik-Hilton Valve, Inc.

3. Clarkson

B. Materials

1. Body, yoke, and stem guide:

a. Carbon Steel: ASTM A36, or equivalent.

b. Stainless Steel: ASTM A351, Grade CF8M, or equivalent.

2. Gate disc: Stainless Steel, ASTM A240 or A276, Type 304 or 304L, or equivalent.

3. Operating stem: Stainless Steel, ASTM A276, Type 316, or equivalent.

4. Seats and Seals: Resilient seats.~~Nitronic 60, or equivalent.~~

5. Bushing: Bronze.

6. Gaskets: Nitrile, 1/8-inch thick, ring gaskets.

7. Fasteners: ASTM F593 and F594.

8. Packing: Teflon or PTFE.

C. Knife Gate Valve Components

1. General

a. The valve design shall be verified using SolidWorks or a similar finite-element stress analysis program to demonstrate the integrity and proper functionality of the valve at the design pressure with the body and flanges unconstrained.

b. The valve shall meet the applicable requirements of AWWA C520.

c. The valve shall be designed so that all required lubrication can be performed with the valve installed.

d. Valves shall be full-port design with the clear port ID equal to or greater than the pipe ID.

e. Provide gate guides for valves where the valve stem is not installed in the vertical position. Gate guides shall fully support the gate and allow it to seat as required.

f. The pressure class of valve flanges shall be equal to or greater than the pressure rating of the valve.

2. Valve Body

a. The valve shall be designed with a relief groove to allow the gate to push solid particles aside to prevent material packing in the seat area.

b. The valve yokes shall be designed to support the operator and resist movement or twisting at the stall thrust capacity of the operator.

c. The sealing and sliding surfaces of the body shall be resilient seats.~~stainless steel with Nitronic 60 to prevent galling. The seats shall be fixed.~~

d. The mounting flanges shall be in accordance with ASME B16.5, Class 150, raised face.

3. Valve Gate Disc

a. The disc shall have a flat invert with a beveled leading edge.

4. Valve Operating Stem

a. The valve shall be operated using a single operating stem.

~~b. The valve stem shall have an integral back-seating ring to allow repacking under pressure. The back-seating ring sealing surface shall be designed to mate with the bottom of the packing gland.~~

~~c.~~b. The valve stem shall be ACME threaded and non-rising.

D. Fabrication

1. Flange shall be raised faced.

2. Flange bolt holes shall be tapped.

3. Gate surface finish shall be 32 micro-inch RMS.

4. The valve shall be marked to indicate the primary seat side of the valve.

E. NSF 61:

1. Provide certification that all components and coatings in contact with the liquid in the valves are NSF 61 approved.

F. Manual Operators:

1. Provide worm gear operator with handwheel in orientation as shown in Drawings. Operator to be self-locking.

G. Electric Valve-Actuators

1. Electric valve actuators shall conform to AWWA C-542 except as modified herein and shall include the motor, motor starter, actuator unit gearing, limit switch

gearing, position limit switches, controls, worm gear reducer, and handwheel as a self-contained unit. Actuator shall be rated for weatherproof NEMA IV operation and mounted in the direction as shown on the drawings. Actuator and gearboxes shall be rated at a minimum 1.5 and 2.0 times the maximum operating torque required by the valve as determined by the valve manufacturer for isolation and modulating valves respectively. Associated valve control panels and devices shall be supplied by the actuator manufacturer as specified in these Specifications and as shown in the Drawings.

a. The actuator shall be powered by, 480 volts, three-phase, 60 Hz.

b. Provide an integral reversing starter with three (3) automatic reset overload relays or thermal protection internal to the motor, a fused control transformer and 24 VDC power supply for internal and external control wiring. A mechanical dial position indicator, gearing and 4-20mA position feedback transmitter powered by the actuators power supply or loop powered shall be supplied. Compression type terminal strips shall be supplied for all remote actuator power, control and indication connections. Control terminals shall be rated at 300 Volts and accept an AWG 24-12 wire gauge range. Power terminals shall be rated at 600 Volts and accept an AWG 30-10 wire gauge range. The electrical compartment shall have a minimum of 3 conduit entries for power, discrete control and instrumentation wiring. A minimum of one (1) 1-1/4-in NPT and two (2) 3/4-in NPT entries are required. The termination compartment shall be sealed separately from the internal actuator controls compartment to prevent the possibility of water intrusion into the actuator's control compartment from an open conduit or other means. The actuator shall have all necessary limit, torque and control switches and other devices in accordance with current version of AWWA C-542 standard and as otherwise specified herein. The actuator shall employ a continuous duty rated motor and include a phase correction circuit to assure proper output drive sleeve direction for open and close operation regardless of incoming power phase sequence. A phase detector is not acceptable. Anti-condensation heaters for the motor and controls enclosure shall be supplied and wired to the customer terminal strip as shown on the drawings. Heaters shall be suited for 110VAC power. The actuator gear housing shall be either cast or ductile iron; aluminum gear housings are not acceptable. All actuator compartment fasteners shall be stainless steel. Actuators shall have a local actuator control station with Open/Stop/Close pushbuttons, and padlockable 3-position selector switch for Local-Off-Remote mode of operation. The control station shall have 2 lights for open (Red) and close (Green). When the selector switch is in Local mode the actuator shall only be operable from the local control station, while in Remote mode it shall be only operable from SCADA or remote control. The actuator shall be equipped to accept 24 VDC remote control open, close, and stop signals.

c. Position limit switches shall be counter gear driven and be an integral part of the valve actuator. Limit switches shall be adjustable, with trip points from fully open to fully closed valve and intermediate valve positions. Gears shall not be subject to breakage or slippage due to over travel and be wired to terminal strip for remote position indication as shown on the drawings. Limit switches shall provide a minimum 8 contact development using 4 contacts with 2 rotors. Limit switches shall be independent from torque switches. Microprocessor or electronically encoded position sensors are not allowed.

d. Valve actuator shall be equipped with a mechanically coupled torque interrupt switch driven directly from the actuator's drive gear. The torque interrupt switches shall stop the control circuit in both the opening and closing directions when valve torque overload occurs or when valves require torque seating in the closed or open position. Microprocessor or electronically encoded based torque sensors are not allowed. The torque switches shall have graduated dials in foot-pounds for both open and closed directions of travel and shall be independently adjustable, so the actuator rated output torque is not exceeded. Switch design shall permit visual verification of switch position without disassembly and require no special tools to make adjustments. A calibration tag shall be mounted near each switch correlating the dial setting with unit output torque.

e. Actuator shall be supplied with a separate 360-degree self-locking worm gear reducer. The worm shaft gear and associated gearing shall be of hardened alloy steel. Non-metallic or cast gearing shall not be allowed. Tapered roller bearings or combination of roller bearings and DU bearings shall be used to provide smooth rotation of the worm. All gearing shall be grease lubricated in a heavy-duty cast iron housing with o-ring and radial seals for permanent lubrication. Adjustable mechanical end stops for 90-degree service shall be supplied to provide positive protection against over travel. All fasteners for adjusting end stops locations shall be stainless steel. A separate removable valve shaft coupling shall be supplied and be splined to provide flexible gearbox mounting locations, to enable ease of installation and removal, and for ease of machining. The gearbox shall have a mechanical dial position indicator graduated in every 10% or 10-degree intervals. The mechanical dial position indicator shall be parallel to the flow direction when the valve is in the fully open position.

f. The actuator shall seal in open and close commands in both local and remote-control mode of operation to allow full valve travel unless interrupted by a stop command or the actuator's protection switches. When the valve is operated to full open or closed, jogging shall not be required, nor should it be a means of meeting open or close cycle times. The control system shall include provision to convert the controls to operate by momentary or jogging control signals.

g. The actuator shall have a capability of both manual and motorized operation; a handwheel with spindle shall be used for manual operation, which shall not rotate during motor operation. Handwheels shall be side mounted with minimum 2-in clearance from any wiring conduit and accessories of the actuator assembly. Top mounted handwheels directly coupled to the actuator drive sleeve are not allowed. Handwheel finish shall be smooth and free of spokes and have open direction arrow indicator for counter-clockwise to open operation.

h. Provide pushbutton control station for direct mounting to the electric actuator. Three pushbuttons, or a three-position selector switch labeled "OPEN," "CLOSED," "STOP"; one selector switch labeled "LOCAL," "OFF," "REMOTE"; and two indicating lamps, RED for open and GREEN for closed, shall be furnished on the pushbutton control station. The pushbutton station shall be suitable for weatherproof service.

i. The indicating lamps shall be removable from the front of the panel. The lamps shall be rated for 120-volt, 50/60 Hertz, single-phase. The selector switch shall have a minimum of two electrically separate contacts for each position. The pushbutton and selector switch contacts shall be rated for 120-volt, 50/60 Hertz, single-phase, 10-ampere continuous current.

j. Motors shall be of high torque, totally enclosed, non-ventilated construction, with motor leads brought into the limit switch compartment without having external piping or conduit box. Motor insulation shall be NEMA Class F. Maximum motor temperature rise shall be limited to Class B insulation values in accordance with NEMA MG-1.

k. Motors shall be of sufficient size to open or close the valves against the maximum expected differential pressure when voltage to the motor terminals is 10 percent above or 20 percent below motor nameplate voltage. The motor duty rating shall be sufficient for two (2) complete OPEN-CLOSE-OPEN cycle (or reverse) without exceeding its temperature rating. Motor shall be pre-lubricated, and all bearings shall be anti-friction type.

2. Actuator manufacturers shall be Rotork, AUMA or approved equal.

3. Motor-actuators shall be mounted directly on the top of the valve bodies as shown on the Drawings.

4. The valve operator motor and all electrical enclosures shall be padlocking, weatherproof, NEMA Type IV, at a minimum.

5. Startup kit: The actuator shall be equipped with a startup kit comprising installation instructions, electrical wiring diagram, and sufficient spare cover screws and seals to provide for loss during the commissioning period.

6. Performance Test Certificate: The actuator shall be performance-tested, and an individual certificate shall be supplied. The test equipment should simulate a valve load, and the following parameters shall be recorded:

    a. Current at maximum torque setting.

    b. Torque at maximum torque setting.

    c. Actuator output speed or operating time.

    d. In addition, test certificate should record details of the Specification, such as gear ratios for both manual and electric operation, closing direction, and wiring diagram number.

7. Provide all valves with the actuator mounting bracket pinned to the body and centered by machined register between bracket and body.

    a. Valves without pins are not acceptable.

2.03 FLANGE GASKETS

A. Packing and O-Rings shall be Buna-N (nitrile).

B. Flange gaskets shall be Blue-Gard 3000 ring gaskets or equivalent.

2.04 PAINTING

A. Do not coat or line stainless steel valves.

B. When testing is completed and accepted, prepare valves for shipment.

1. Provide all external surfaces of the valves free of grease or oil and provide all machined surfaces protected with an anticorrosive preparation.

2. Painting: Provide manufacturer's standard epoxy painting system

    a. Valve Color: Contractor shall submit sample of available colors to Engineer (Engineer of Record) for approval.

    b. Coat internal and external ferrous surfaces of valves with NSF Certified Epoxy in accordance with ANSI/NSF 61.

2.05 NAMEPLATES/MARKINGS

A. Provide data plates or markings bearing serial numbers, ratings, and other essential information placed on the valve body. Provide all data on Type 316 stainless steel nameplates.

PART 3 - EXECUTION

3.01 SHOP TESTING

A. Shop test valves and actuators in accordance with ASME B16.34, API 598, or AWWA C-520 ~~and~~ as specified.

B. All testing will be witnessed by the Engineer (Engineer of Record) and Owner.

C. Provide shell test at 1.50 times the valve pressure rating:

1. Duration: Minimum 10 minutes after valve is fully pressurized.

D. Closure Testing:

1. Test at working pressure specified, at valve rated pressure specified, and minimum pressure specified. Test valves for seat leakage from both sides of the disc.

2. Allowable leakage of 1.00 cubic inches per minute per inch valve diameter.

E. Cycle Testing:

1. Operate each valve two (2) full open-close-open cycles.

F. Provide written test certificates and test results.

G. Provide the following visual inspections:

1. Verification of the primary dimensions.

2. Verification of the absence of defects in castings (per MSS-SP-55).

3. Verification of the nameplate and marking (per MSS-SP-25).

H. Correct or replace promptly all defects or defective equipment revealed by or noted during tests at no additional cost to the Owner.

I. In the event that specified tests indicate that the valves or appurtenances will not meet specifications, Engineer has the right to require additional complete witnessed tests for all valves and appurtenances at no additional cost to the Owner.

J. Repeat tests until specified results are obtained.

K. Correct or replace promptly all defects or defective equipment revealed by or noted during tests at no additional cost to the Owner.

3.02 INSTALLATION

A. Prior to installation, protect stored valves and appurtenances from damage due to exposure to sunlight, heat, dirt, debris, freezing and thawing, vandalism, etc.

B. Clean all debris, dirt, gravel, etc., from inside of piping before placing valves in place.

C. Inspect material for defects in workmanship and material.

D. Erect and support valves in respective positions free from distortion and strain on appurtenances during handling and installation.

E. Set plumb and support valves in conformance with instructions of manufacturer.

F. Clean out debris and foreign material from valve openings and seats, test operating mechanisms to check functioning, and check nuts and bolts for tightness.

G. Repair, valves, and other equipment which does not operate easily or are otherwise defective at no additional cost to the Owner.

H. Optimize, test, and confirm all limit settings.

3.03 FIELD TESTING

A. Manufacturer Representative for both the valve and actuator shall be present to verify the proper installation and setup of the valves and actuators.

B. Pressure test valves and actuator with pipeline pressure testing. Joints shall show no visible leakage under test. Repair joints that show signs of leakage prior to final acceptance by Owner. Contractor shall protect any special parts of control systems operators that might be damaged by the pipeline test. The Contractor shall repair or replace all components damaged during testing at no cost to the Owner.

1. Test functions and limit settings of each valve.

2. Contractor shall cycle each electrically actuated valve fully open and fully closed two (2) times each to verify the valve limits are properly set.

3. Contractor shall cycle each manually operated valve fully open and fully closed two (2) times each to verify the valve operates smoothly without binding.

4. Contractor shall perform cycle testing for both flow and dry conditions.

C. Make all adjustments necessary to place valves in specified working order at time of above tests.

D. Remove and replace valves and appurtenances at no additional cost to the Owner with equipment that will meet all requirements specified and indicated if unable to demonstrate to the satisfaction of the Engineer that valves will perform the service specified, indicated and as submitted and accepted.

3.04 FIELD TOUCH-UP PAINTING:

A. After installation and accepted testing by the Engineer (Engineer of Record), apply touch-up paint to all scratched, abraded, and damaged shop painted surfaces. Coating type and color shall match shop painting.

3.05 CONTRACT CLOSEOUT:

A. Provide in accordance with Section 01700.

END OF SECTION

SECTION 15400
PLUMBING SYSTEMS

PART 1 - GENERAL

1.1 DESCRIPTION

A. Provide new plumbing systems as indicated and in compliance with Contract Documents, complete and ready for operation.

B. The Work of this Section shall include all labor, materials, tools, equipment, and appurtenances, and performing all operations necessary to furnish and install complete and operable systems in accordance with this Section of these Specifications, the Drawings, and the codes and standards listed herein.

C. Coordinate with the Local Water Utility as to any Local restrictions or requirements relative to backflow prevention devices and metering.

D. The General Contractor is to provide earth and rock excavation, backfill, concrete masonry, concrete reinforcement, and construction joints for Plumbing Work. This Work shall conform to the requirements specified under the applicable sections of the specifications.

E. Hoisting, Scaffolding, staging, and planking: The Plumbing Subcontractor shall provide, set up, and maintain all derricks, hoisting machinery, and shall do all hoisting required for their Work.

1. The Plumbing Subcontractor shall furnish, install, and maintain all scaffolding, staging, and planking for their Work.

2. Scaffold shall have solid backs and floors to prevent dropping materials therefrom to the floor or ground.

F. Temporary Electricity: The Plumbing Subcontractor shall furnish all extension cords, sockets, motors, and accessories for their Work.

1.2 REFERENCES

A. Except as specified herein, the latest edition of the standards listed below form a part of this Specification to the extent referenced in this Section. Where earlier editions of standards are adopted as referenced in applicable codes, those shall govern. The publications are referred to within the text by the basic designation only.

B. In each of the standards referred to herein, consider the advisory provisions to be mandatory, as though the word, "shall" had been substituted for "should" wherever it appears.

C. American Society Of Heating, Refrigerating And Air-Conditioning Engineers (ASHRAE):

1. 90.1: Energy Standard for Buildings Except Low-Rose Residential Buildings

D. American Society of Mechanical Engineers (ASME):
1. B1.1: Unified Inch Screw Threads, (UN and UNR Thread Form)
2. B16.18: Cast Copper Alloy Solder Joint Pressure Fittings
3. B16.21: Nonmetallic Flat Gaskets For Pipe Flanges
4. B16.22: Wrought Copper and Copper Alloy Solder Joint Pressure Fittings
5. B16.24: Cast Copper Alloy Pipe Flanges and Flanged Fittings Class 150, 300, 400, 600, 900, 1500, and 2500
6. B16.50: Wrought Copper and Copper Alloy Braze-Joint Pressure Fittings
7. B18.2.1: Square, Hex, Heavy Hex and Askew head Bolts and Hex, Heavy Hex, Hex Flange, Lobed Head, and Lag Screws (Inch Series)
8. B18.2.2: Nuts for General Applications: machine Screw Nuts, hex Square, hex flange, and Coupling Nuts (Inch Series)

9. B40.1: Pressure Gauges and Gauge Attachments

E. American Society for Testing Materials (ASTM):

1. A36: Standard Specification for Carbon Structural Steel
2. A47: Ferritic Malleable Iron Castings
3. A53: Pipe, Steel, Black and Hot-Dipped, Zinc-Coated, Welded and Seamless
4. A183: Carbon Steel Track Bolts and Nuts
5. A194: Standard Specification for Carbon Steel, Alloy Steel, and Stainless Steel Nuts for Bolts for High Pressure or High Temperature Service, or Both
6. A307: Standard Specification for Carbon Steel Bolts, Studs, and Threaded Rod 60000 PSI Tensile Strength
7. A518: Corrosion-Resistant High-Silicon Iron Castings
8. A536: Ductile Iron Castings
9. B32: Solder Metal
10. B42: Seamless Copper Pipe, Standard Sizes
11. B88: Seamless Copper Water Tube
12. B584: Copper Alloy Sand Castings for General Applications
13. C564: Rubber Gaskets for Cast Iron Soil Pipe and Fittings
14. D2000: Rubber Products in Automotive Applications
15. D2665: Poly (Vinyl Chloride) (PVC) Plastic Drain, Waste, and Vent Pipe and Fittings
16. F441: Standard Specification for Chlorinated Poly (Vinyl Chloride) (CVPC) Plastic Pipe, Schedules 40 and 80

F. American Water Works Association (AWWA):
1. C111: Rubber-Gasket Joints for Ductile-Iron Pressure Pipe and Fittings
2. C115: Flanged Ductile-Iron Pipe with Ductile-Iron or Gray-Iron Threaded Flanges
3. C151: Ductile-Iron Pipe, Centrifugally Cast, for Water
4. C209: Cold-Applied Tape Coatings for Steel Water Pipe, Special Sections, Connections, and Fittings
5. C500: Metal-Seated Gate Valves for Water Supply Service
6. C509: Resilient-Seated Gate Valves for Water Supply Service

G. American Welding Society (AWS):

1. A5.8: Filler Metals for Brazing and Braze Welding
2. BRH: Brazing Handbook

H. Manufacturers Standardization Society of the Valve and Fittings Industry (MSS):

1. SP-58: Pipe Hangers and Supports - Materials, Design, Manufacture, Selection, Application, and Installation
2. SP-71: Gray Iron Swing Check Valves, Flanged and Threaded Ends
3. SP-80: Bronze Gate, Globe, Angle and Check Valves
4. SP-110: Ball Valves Threaded, Socket Welding, Solder Joints, Grooved and Flared Ends

I. National Fire Protection Agency (NFPA):

1. NFPA 72: National Electrical Code (NEC)

J. Massachusetts Electrical Code (MEC).

1.3 DEFINITIONS

A. The following phrases shall have the following meanings for the purposes of the Work of this Section:
1. "Service water" shall mean non-potable water downstream of a secondary backflow preventer originating from a potable water source and intended for washdown, hydronic heating system make-up, and process applications.
2. “Drain” piping shall mean sump pump discharge drain piping.

1.4 SUBMITTALS

A. Submit the following in accordance with Section 01300 – Submittal Procedures and as specified herein:

1. Shop Drawings:
   a. Coordination Drawings: Prepare as specified in Paragraph “Cooperation and Coordination with Other Trades” of this Section.
2. Product Data - Annotate descriptive data to show the specific manufacturer, model, type, size, capacity, curves, wiring diagrams, options, etc. of each item.
   a. Pipe and fittings
   b. Valves
   c. Pipe hangers and supports
   d. Plumbing fixtures
   e. Pumps
3. Control Panel:
   a. Bill of Materials including manufacturer, model number and quantities.
   b. Annotated product cutsheets for enclosure and control panel components.

c. Front elevations of control panels showing dimensions, location of panel internal and panel exterior mounted components. Provide elevations with and without doors.
d. Wiring diagrams and wiring schematics clearly indicating all required field wiring and terminations.
e. Submit wiring diagrams using project specific tags indicated on the Contract plumbing, electrical and instrumentation drawings.

4. Test Reports - prepare as specified in Part 3 of this Section
   a. Test procedures
   b. Pressure tests
   c. Functional testing
5. Operation and Maintenance Manuals - Prepare manuals in accordance with Section 01730 – Operation and Maintenance Data.
   a. Valves
   b. Plumbing fixtures
   c. Pumps

1.5 QUALITY ASSURANCE

A. Provide in accordance with Section 01400 – Quality Assurance and as specified herein.

B. Provisions:

1. Drawings and specification direct attention to certain features of equipment, but do not purport to cover all details entering into design and construction of the equipment, controls, or appurtenances.
2. Consideration shall be given only to products of manufacturers who demonstrate successful experience in manufacture, operation, and servicing equipment of type, size, performance, and reliability equal to that specified. Equipment and components shall be the product of a single manufacturer insofar as possible.
3. Equipment furnished to fit within the space allocated with adequate clearance for proper operation and maintenance.

C. Workmanship and Design:

1. Provide equipment such that all parts are designed for continuous and uninterrupted service, and such that lubrication, adjustment, or replacement of parts is possible without manufacturer's assistance. Corresponding parts of multiple units shall be interchangeable.
2. Install equipment that complies with state, local and federal codes and regulations.

D. Alternate Equipment and Arrangement:

1. If any equipment submitted for acceptance requires arrangement differing from that indicated or specified, Plumbing Subcontractor to prepare and submit for review, detailed structural, mechanical, and electrical drawings, and equipment lists showing all necessary

changes and all special features of equipment proposed. Changes are at no additional compensation.

1.6 DELIVERY, STORAGE AND HANDLING

A. Provide in accordance with Section 01610 – Delivery, Storage and Handling and as specified herein.

B. Shipping:

1. All equipment, material and spare parts shall be shipped, stored, handled, and installed in such a manner as not to degrade quality, serviceability, or appearance and so as to maintain equipment and material warranties.
2. Ship equipment, material and spare parts complete except where partial disassembly is required by transportation regulations or for protection of components.
3. Pack spare parts in containers bearing labels clearly designated contents and pieces of equipment for which intended.
4. Spare parts shall be delivered at same time as pertinent equipment. Deliver to Owner after completion of work.

C. Receiving:

1. All equipment, material and spare parts shall be delivered to the site in original packages or containers bearing the manufacturer's labels and product identification.
2. Inspect for damage and correctness, and inventory items, upon delivery to site.
3. Store and safeguard equipment, material, and spare parts in accordance with manufacturer's recommendations.
4. Store equipment, material and spare parts protected for the weather, humidity and temperature variations, dirt and dust or other contaminants.

1.7 COOPERATION AND COORDINATION WITH OTHER TRADES

A. Work shall be performed in cooperation with other trades on the project and so scheduled as to allow efficient completion of the project. Materials and equipment shall be installed as fast as conditions will permit and installed promptly.

B. Furnish to all other trades advance information on location and size of all concrete pads, chases, frames, boxes, pits, sleeves, and openings needed for the Work, and also furnish layout information and shop drawings necessary to permit other trades affected by the Work to install their work properly coordinated and without delay.

C. Where there is evidence that Work installed interferes with the work of other Sections, assist in working out space conditions to make satisfactory adjustments.

D. With the acceptance of the Engineer and without extra cost to the Owner, make reasonable modifications in Work specified under this Section required to coordinate with normal structural interferences, or for proper execution of specified work.

E. If work is installed before coordinating with other trades so as to cause interference with the work of such trades, make all necessary changes in Work under this Section.

F. Protect all materials and work of other trades from damage that may be caused by the Work required under this Section and be responsible for repairing any damages caused by such work.

G. Follow Drawings in layout work. Check drawings of, and coordinate with, other trades to verify special provisions, installation requirements and spaces in which Work provided under this Section will be installed. Maintain maximum headroom or space conditions at all points. Where headroom or space conditions appear inadequate, notify the Engineer before proceeding.

H. Prepare and submit for acceptance Coordination Drawings consisting of 3/8 inch = 1 foot-0 inch scale or larger working plans and sections, clearly showing how this Work is to be installed in relation to the work of other Sections. Coordination Drawings shall be based upon accepted equipment submittals. The General Contractor (Mechanical Process Trade) will prepare backgrounds for Coordination Drawings for all buildings in this Contract and will indicate all mechanical process piping and equipment. These Coordination Drawings shall be used to work out the coordination of all work of all trades as specified in each applicable Section. Show and coordinate the Work of this Section on said Coordination Drawings.

I. Attend regular coordination and job progress meetings required.

1.8 PRODUCTS FURNISHED BUT NOT INSTALLED UNDER THIS SECTION

A. Access panels shall be furnished under this Section and installed by the trade responsible for the appropriate Section of the Specifications for the surface upon which the panels are mounted. Prepare a schedule showing location, size and function of all required access panels and deliver schedule to representatives of all installing trades.

B. Inserts and anchor bolts shall be furnished under this Section and installed under Section 03300 – Cast-in-Place Concrete. Prepare a schedule showing location, size and function of all required inserts and anchor bolts and deliver schedule to representative of the installing trade.

C. For new construction, pipe sleeves shall be furnished under this Section and installed by the trade whose finished interior surfaces will be penetrated. Prepare a schedule showing location, size and function of all required pipe sleeves and deliver schedule to representatives of all installing trades. For existing construction, pipe sleeves shall be furnished and installed under this Section.

1.9 PRODUCTS INSTALLED BUT NOT FURNISHED UNDER THIS SECTION

(NOT USED)

1.10 ELECTRICAL WORK

A. All power including wiring, conduit and connections to motors will be furnished and installed by Division 16. Motor starters indicated or specified to be factory-furnished shall be factory wired as an integral part of packaged mechanical equipment. Motor starters that are not integral with the mechanical equipment served will be furnished, mounted, and wired by Division 16. Safety disconnect switches will be furnished, mounted, and wired by Division 16.

B. All control devices as well as wiring, conduit and connections between control devices and plumbing equipment shall be furnished, mounted, and wired by Division 15. Control wiring shall be 120 VAC or less.

C. All equipment furnished under this Section requiring motors shall have motors factory furnished and installed by the manufacturer of the equipment served and shall be mounted and aligned so as to run free and true. Provide motors and all associated internal wiring for plumbing equipment as an integral part of the equipment. Motor starters and contactors shall be factory-furnished and wired as an integral part of packaged mechanical equipment where indicated on the Drawings.

D. Motor starters shall be equipped with all poles, auxiliary contacts, and other devices necessary to permit the interlocking and control sequences required. Coordinate same with Division 16.

E. Provide wiring in conduit as specified in Division 16.

1.11 CODES, PERMITS AND FEES

A. Except for additional requirements as specified or indicated under the Work of this Section, materials, workmanship, and equipment shall conform with the governing edition of the following regulations, and agency requirements.

1. State and Local Building Codes, including but not limited to, the Massachusetts Plumbing Code, Massachusetts Building Code, and Massachusetts Fire Safety Code.
2. Massachusetts Department of of Public Health
3. Massachusetts Department of Environmental Protection
4. Local Fire Department
5. Local Water and Sewer Authority or Department
6. Occupational Safety and Health Authority (OSHA)
7. Any other local codes or requirements of Authorities Having Jurisdiction.

B. Pay for all fees and give all notices, file all plans, obtain all permits and licenses, and obtain all necessary approvals from Authorities Having Jurisdiction. Deliver all certificates of inspection to the Authorities Having Jurisdiction. No work shall be covered before examination and approval by Authorities Having Jurisdiction. Replace imperfect or condemned work to conform to inspectional requirements, satisfactory to the Engineer and Authorities Having Jurisdiction without extra cost to the Owner. If Work is covered before inspection and acceptance, pay costs of uncovering and reinstalling the covering, whether it meets contract requirements or not.

1.12 RECORD DRAWINGS

A. Prepare and maintain record drawings in accordance with Section 01346 – As-Built Drawings and as specified herein.

B. As work progresses and for the duration of the Contract, maintain a complete and separate set of prints of record drawings at the job site at all times. On a daily basis, record work completed and all changes from original contract drawings clearly and accurately, including work installed as a modification or addition to the original design such as change orders, instructions issued by the Engineer, or conditions encountered in the field.

C. Record drawings shall show as-built condition of pipe routing and sizes, valve locations, details, control changes and corrections to schedules. Schedules shall show actual manufacturer and make and model numbers of installed equipment. Remove all superseded data to show the completed work. Accurately indicate the location, size, type, and elevation of new buried piping and their relationship to existing buried piping.

D. The record drawings will be used as a guide for determining the progress of the Work installed. They shall be inspected on a regular basis and shall be corrected immediately if found inaccurate or incomplete. Requisitions for payment will not be acted upon until the record drawings are accurate and up-to-date.

E. At completion of Work prepare a complete set of CAD-drafted record drawings on bond paper showing all systems as actually installed. The Contract Drawing electronic CAD files will be made available for the Plumbing Subcontractor's use to serve as backgrounds for the record drawings. Provide all drawings necessary to show the required record information. Submit CAD-drafted prints to the Engineer for comments as to compliance with this Section. Make all modifications so noted by the Engineer.

F. Certify the accuracy of the record drawings. Record drawings shall become the property of the Owner.

G. When required by jurisdiction, submit the record set for approval by the Authority Having Jurisdiction in a form acceptable to the jurisdiction.

PART 2 - PRODUCTS

2.1 GENERAL

A. Branch piping to appliances or equipment shall be at least as large as the inlets thereof.

B. Where applicable, all products requiring approval by the Massachusetts Department of Public Safety shall be so approved. Where product types are available with Energy Star and/or Water Sense labeling, they shall be provided.

2.2 DRAIN, WASTE AND VENT (DWV) PIPING

A. Fittings shall be long radius fittings, except fittings in vent piping may be short radius fittings. Minimum piping size shall be 2-inch for buried piping and 1 1/2-inch for aboveground piping.

B. Aboveground Piping:
   1. Sump Pump Discharge:
      a. For sizes 2 1/2 to 3-inch aboveground: ASTM A53, hot dipped galvanized steel pipe, Schedule 40, with ASME B16.3 Class 150 threaded galvanized malleable iron fittings.
      b. For sizes 2-inch and smaller aboveground: ASTM B88, Type L, hard drawn copper tubing with ASME B16.18 or ASME B16.22 solder joint fittings. Provide ASTM B42 copper pipe nipples with threaded end connections. Provide ASTM B32, 95-5 tin-antimony solder, or provide Plumbing Code approved lead-free solder.

2.3 SERVICE WATER PIPING

A. Aboveground Piping:

   1. Copper Tubing:
      a. ASTM B88, Type L, hard drawn copper tubing with ASME B16.18 or ASME B16.22 solder joint fittings. Provide ASTM B42 copper pipe nipples with threaded end connections. Provide ASTM B32, 95-5 tin-antimony solder, or provide Plumbing Code approved lead-free solder.

B. Valves:

   1. Provide valves suitable for minimum of 125 psig and minimum of 180 degrees F water. Valves shall have flanged end connections, except sizes smaller than 2 1/2-inch may have threaded end connections with a union on all but one side of the valve, or solder end connections for connections between bronze valves and copper tubing. Ball valves may be provided in lieu of gate valves.
   2. Gate Valves (3-inch and Smaller):
      a. MSS SP-80, Class 125 or 150, bronze valves.
   3. Check Valves (3-inch and Smaller):
      a. MSS SP-80, Class 125 or 150, bronze swing check valve.
   4. Ball Valves (3-inch and Smaller):
      a. MSS SP-110, full port or standard port design, copper alloy. Valves shall have lever handles, chrome plated steel ball, and PTFE seats and seals.

C. Hose:

   1. Kink-resistant reinforced rubber hose, corrosion resistant metal couplings, size and length as indicated.

2.4 PIPE HANGERS AND SUPPORTS

A. Provide MSS SP-58, Type 1 or Type 7 as indicated with adjustable type steel support rods.

B. Attach to steel joists with Type 19 or 23 clamps and retaining straps. Attach to Steel W or S beams with Type 21, 28, 29, or 30 clamps. Attach to steel angles and vertical web steel channels with Type 20 clamp with beam clamp channel adapter. Attach to horizontal web steel channel with drilled hole on centerline and double nut and flat washer. Attach to concrete with Type 18 insert or drilled expansion anchor.

C. Provide Type 40 insulation protection shields for insulated piping.

D. Hangers, supports, insulation shields, rods and fasteners shall be hot-dipped galvanized steel, except shall be series 300 stainless steel in chemical areas and the Dewatering Building. Hangers and supports in contact with bare copper tubing shall be copper-plated or PVC coated.

2.5 SUPPLEMENTARY STEEL AND CHANNELS

A. Unless otherwise indicated on the Structural Drawings, provide all supplementary steel and factory fabricated channels required for proper installation, mounting and support of all equipment and systems provided under this Section.

B. Channels and supplementary steel shall be of sufficient strength and size to allow only a minimum deflection in conformance with the manufacturer's requirements for the specific loading on the system installed herein.

C. All supplementary steel shall be ASTM A36 factory-formed standard mill finished structural shapes and shall be hot dipped galvanized after fabrication. Channels shall be hot-dipped galvanized steel. Supplementary steel and channels shall be series 300 stainless steel in chemical areas and the Dewatering Building.

2.6 PIPE SLEEVES AND PREFABRICATED FLASHING

A. Sleeves in Masonry and Concrete Walls, Floors, and Flat Roofs: Service weight cast iron or standard class ductile iron pipe, except shall be schedule 40 series 300 stainless steel in chemical areas and the Dewatering Building. Where sleeves are cast into new concrete, sleeves shall be ASTM A 53, Schedule 40 or Standard Weight steel pipe, have 2-inch high annular ring water stop continuously welded all around the pipe sleeve, and be hot-dipped galvanized after fabrication, except shall be all series 300 stainless steel in chemical areas and the Dewatering Building.

B. Sleeves in Non-Masonry or Non-Concrete Walls, Floors, and Roofs: Hot-dip galvanized steel sheet, minimum 26 gage thickness, except shall be Series 300 stainless steel in chemical areas and the Dewatering Building.

C. Mechanically Adjustable Segmented Elastomeric Seals: Seals shall have EPDM seal elements and steel hardware with corrosion inhibiting coating, except shall be Series 300 stainless steel hardware in chemical areas and the Dewatering Building.

D. Prefabricated flashing for sloped shingled roofing shall be manufactured from EPDM rubber or silicone with square or round flexible aluminum base. Design shall form watertight, weatherproof seal around pipe and allow flashing to adjust to any roof pitch. Flashing shall be marked to allow accurate trimming for required pipe size.

2.7 PIPE ESCUTCHEONS

A. General: Provide pipe escutcheons at all pipe penetrations where penetration is exposed to view as specified herein with inside diameter closely fitting pipe outside diameter. Select outside diameter of escutcheon to completely cover pipe penetration hole in floors, wall, or ceilings; and pipe sleeve extension, if any. Escutcheons shall be held in place by internal spring tension or set screws.

B. Provide pipe escutcheons in finished spaces. Pipe escutcheons shall be of stainless steel, anodized aluminum, or chrome-plated brass, solid or split hinged.

2.8 PLUMBING FIXTURES

A. See contract plumbing drawings.

2.9 WATER PUMPS

A. Provide centrifugal pumps, of capacities, types, and configurations shown on schedules. Pumps shall meet the requirements of this Section and the performance requirements shown on the schedules (with equal or less horsepower requirement than the pump shown on the schedules).

B. Pumps shall be designed specifically for intended classes of service, with non-overloading characteristics throughout the design curve. Motors shall not operate in their service factor. Impeller shall be statically and dynamically balanced. Impeller size shall be no more than 90 percent of casing size.

C. Each pump casing shall be designed to withstand the discharge head plus the static head on system plus 50 percent of the total, but not less than 125 psig. Pumps shall be rated for continuous operation between 35 and 225 degrees F. Pumps shall be factory tested at operating conditions, thoroughly cleaned, and painted prior to shipment. Installation instructions shall be included with pump at time of shipment.

D. Bearing frame and pump internals shall be serviceable without disturbing motor or connected piping. Provide plugged tappings for pressure gauges at inlet and discharge nozzles of pumps. Provide plugged tappings for vent and drain ports in volute.

E. Bearings shall be ball-bearings or roller-bearings.

F. Seals shall be mechanical type. Seals shall be designed for continuous operation to 225 degrees F.

G. Motors shall be open drip-proof enclosure of horsepower, voltage and phase indicated, with heavy-duty grease lubricated ball bearings.

H. Pump and motor shall be factory aligned, and shall be realigned after installation, prior to start-up.

I. In-Line Centrifugal Pumps:

1. In-line pumps shall be close coupled direct driven and have all-bronze construction, including bronze casings, alloy steel shafts with copper alloy shaft sleeves, and bronze impellers. Impeller shall be statically and dynamically balanced. Bearings shall be either sleeve type or sealed ball bearings. Shaft seals shall be mechanical seals. Provide casing wear rings, drain, and vent connections with threaded plugs, suction, and discharge pressure gage tappings with threaded plugs, and flexible coupling or direct drive connection between pump and motor. If the scheduled pump includes ball bearings and a direct drive motor to impeller connection, the submitted pump shall not have sleeve bearings or a flexible coupling between pump and motor.

J. Wet Rotor Pumps:

1. Pumps shall be single stage. Pumps shall have cast iron casing, ceramic shaft, carbon bearings, EPDM O-rings and gaskets, and non-metallic impellers. Pumps shall have replaceable bronze cartridge containing all moving parts of the pump. Pumps shall be self-lubricating with no mechanical seal. Pumps shall have thermally protected permanent split capacitor motor and stator housing. Provide anti-condensate baffle with ambient air flow to protect motor windings against condensate buildup.

K. Flexible Connectors:

1. Provide flexible connectors at pumps. All connectors shall be installed on the equipment side of shutoff valves, horizontal and parallel to shafts whenever possible. Connectors shall be manufactured of nylon tire cord and EPDM rated at 250 psig/170 degrees F, dropping in a straight line to 170 psig/250 degrees F for sizes 1 1/2 to 12-inch. Neoprene in lieu of EPDM shall not be acceptable. Straight connectors to have two (2) spheres reinforced with a molded-in, external ductile iron ring between the spheres.
2. Connectors shall be pre-extended per manufacturer's recommendation to prevent elongation under pressure. Connectors bolted to gate, butterfly of check valves to have a minimum 5/8-inch flange spacer installed between the connector and the coupling flange. Minimum safety factor of 3.6 at a maximum pressure rating shall be certified by test reports.
3. Connectors shall be Mason Ind. Super-Flex type MFTNC or NFTFU, or acceptable equivalent product.

2.10 SUMP PUMPS (SUBMERSIBLE TYPE)

A. UL/CSA listed, factory assembled and tested submersible type pumps for operation under water up to maximum 120 degrees F or higher and capable of passing minimum 3/4-inch spherical solids. Pump shall be complete with cast-iron casing with corrosion resistant finish, cast iron or bronze impeller, stainless steel shaft, carbon/ceramic mechanical seals, sealed heavy-duty ball bearings, water-cooled hermetically-sealed motor, built-in automatic reset thermal protection, stainless steel lift handle, and waterproof three-conductor cables and grounded plugs. Pumps shall have double seal design.

B. Provide adjustable/variable level float switches complete with waterproof three-conductor cable and grounded plug. Plug shall be designed for piggybacking into pump grounded plug. Float shall have plastic encased variable level switch designed for use in minimum 18-inch diameter sump. Variable level control switch shall be normally open when hanging down vertically above sump liquid level, and close when it reaches a few degrees above the horizontal position.

C. Select the pump so that the operating point is in the middle one half of the characteristic performance curve for the pump to be furnished.

D. Provide equipment rated in accordance with the Area Classification schedule on the Contract electrical drawings.

E. Sump Pump Control Panel:

1. Provide a UL listed Sump Pump Control Panel rated for a single 480VAC/3 phase/60 Hz power connection with integral step down transformers as required. The Sump Pump Control Panel shall provide 480VAC power for both pumps.

2. Provide motor starters for the sump pumps integral to the control panel.

3. Provide dedicated Hand/Off/Auto selector switches for each pump.

4. All switches, buttons, and lights to be 35 mm LEDs. Provide dry contacts for remote indication and LED indicating lights for the following:

   a. Pump Running – Green (typical of 2)

   b. Pump Off – Red (typical of 2)

   c. Pump Fault – Amber (typical of 2)

   d. General Fault - Amber

   e. Level Alarm High – Amber

5. All wires inside the panel to land at terminal blocks. Wiring directly between devices is not acceptable. Use one side of the terminal block for local terminations and the other for remote. All wires to be tagged at each end and shall match the shop drawings.

6. Provide device power from the Sump Pump Control Panel for all instruments and equipment associated the sump system.

7. Provide panel complete with high water alarm light, high water alarm horn with alarm test and horn silence switch, 115 VAC auxiliary dry high level alarm contacts, general fault contacts, and NEMA 4X thermoplastic enclosure.

PART 3 - EXECUTION

3.1 GENERAL

A. Installation, workmanship, inspection, and testing shall be in accordance with the specified Codes with the additions specified herein.

B. Arrange for permits, inspections, and tests, in accordance with applicable State and local codes, at the Plumbing Subcontractor's expense. Verify all measurements at job site.

C. Avoid interferences with other trades.

3.2 MANUFACTURERS INSTRUCTIONS

A. Obtain instructions from the manufacturer for the proper method of installation and connection of the equipment that is to be installed. Obtain all information that is necessary to facilitate the Work and to complete the project

3.3 INSTALLATION

A. Installation, workmanship, inspection, and testing shall be in accordance with the specified Plumbing Code, Energy Conservation Code, and Building Code with the additions specified herein. Install piping straight and true to bear evenly on hangers and supports. Keep the interior and ends of new piping and existing piping affected by the Work thoroughly cleaned of water and foreign matter. Keep piping systems clean during installation by means of plugs or other acceptable methods. When work is not in progress, securely close open ends of piping to prevent entry of water and foreign matter. Inspect piping before placing into position. When fixtures require both hot water and cold water supplies, provide the hot water supply to the left of the cold water supply. Plastic piping shall not penetrate fire walls or fire floors and shall be used on one side of fire walls and fire floors not closer than 6 inches to the penetration. Plastic DWV piping shall not be permitted in more than two-story buildings. Cast-iron DWV piping only shall be provided in more than two-story buildings. Copper tube extracted joints shall not be permitted.

B. Piping shall not be permitted in Electrical Rooms and stairwells.

C. Piping and other apparatus shall not be installed in such a manner so as to interfere with the full swing of doors, movement of personnel and equipment, and access to other equipment.

D. Install aboveground pressurized piping to permit draining of all sections of each piping systems without traps. Pitch piping back to system low points. Provide drain valves at all piping low points.

E. Make provisions for pipe expansion and contraction with suitable anchors and offsets, expansion joints, or expansion loops. Install piping to allow freedom of movement in all planes without imposing undue stress on any section of the main piping, branch piping, equipment, and structure.

F. Piping, General: Determine and establish measurements for piping at job site. Cut pipe to actual dimensions and assemble to prevent residual stress. Use reducing fittings for changes in pipe size. Size changes made with bushings will not be accepted. Within buildings, run piping

G. Threaded Connections:

1. Jointing compound for pipe threads shall be polytetrafluoroethylene (PTFE) pipe thread paste, pipe cement and oil, or PTFE powder and oil; apply only on male threads. Provide exposed ferrous pipe threads with one coat of primer applied to a minimum dry film thickness of 1.0 mil. Do not thread metal pipe into plastic piping.

H. Soldered Connections:

1. Soldering shall be performed in accordance with best soldering practice. Before soldering copper tubing joints, both the outside of the tube and the inside of the fitting shall be cleaned with a wire fitting brush until the entire joint surface is bright and clean. Provide suitable flux for use with solder. Surplus soldering material shall be removed at all joints. Piping shall be supported prior to soldering and not be sprung or forced.
2. For solder end valves, remove stems and washers and other items subject to damage by heat during installation. Reassemble valve after soldering is complete. Valves without heat sensitive parts do not require disassembly but shall be fully opened during soldering.

I. Brazed Connections:

1. Brazing of copper tubing joints shall be performed in accordance with AWS BRH, except as modified herein. During brazing, the pipe and fittings shall be continuously purged with a pressure regulated inert gas, such as nitrogen, to prevent the formation of scale. Before brazing, both the outside of the tube and the inside of the fitting shall be cleaned with a wire fitting brush until the entire joint surface is bright and clean. Brazing flux shall not be used. Surplus brazing material shall be removed at all joints. Piping shall be supported prior to brazing and not be sprung or forced.

J. Valves:

1. Install valves approximately at locations indicated. Orient stems vertically, with operators on top, or horizontally. Provide support for valves to resist operating torque applied to pipes.
2. Shutoff Valves
    a. Provide shut-off valve at connection to each fixture, appliance or equipment and where otherwise indicated.

K. Pipe Hangers and Supports:

1. Selection, application, and installation of piping hangers and supports shall conform with MSS SP-58, unless otherwise indicated.
2. Furnish and install safe and substantial means of support for all parts of the piping system. Attach all pipes securely to the structure in correct alignment and pitch, to prevent vibration and to effectively care for expansion and contraction.
3. All piping shall be hung to true alignment, using appropriate hanger arrangements. Wire and strap hangers shall not be permitted. Hangers shall be located so that piping and hangers will be 6 inches clear from other piping, hangers, conduits, lighting fixtures, equipment, ceiling suspension systems, ductwork, and other obstructions. Where insulation or other covering is provided, minimum clearance shall take into account such covering.
4. Supplementary steel and channels shall be firmly connected to the building construction in a manner accepted by the Engineer, or as otherwise shown on the Drawings. Equipment and piping shall not be supported from metal decking or plaster ceilings.
5. Rod Sizes, MSS SP-58.
6. Piping to Receive Insulation
    a. Provide temporary wood spacers between the insulation protection shield and the pipe in order to properly slope the piping and to establish final elevations. Temporary wood spacers shall be of the same thickness as the insulation to be provided for Plumbing Insulation.
7. Maximum Spacing Between Supports
    a. Support piping within one foot on either side of flanged valves, in-line pumps, and changes in direction. Support within 2 feet of wall penetrations.
    b. Vertical Piping: Support metal piping at each floor, but at not more than 10 foot intervals, with pipe riser clamps or offset pipe clamps. Support plastic and piping at each floor and at midpoint between floors, but at not more than 5 foot intervals. Support within 2 feet of floor and roof penetrations and within 2 feet of offsets and 90 degree turns.
    c. Horizontal Piping: Support cast-iron piping at 5 foot intervals, except for pipe exceeding 5 foot length, provide supports at intervals equal to the pipe length but not exceeding 10 feet. Locate supports within one foot of each change of direction, and within 18 inches of joints for straight runs. Support plastic piping at 4 foot intervals and support plastic piping at each change of direction. Support steel piping and copper tubing as follows:

Maximum Spacing Feet										
Nominal Pipe Size (inches)	≤ 1	1 1/4	1 1/2	2	2 1/2	3	4	5	6	8
Steel Pipe	7	7	9	10	11	12	14	16	17	19
Copper Tube	5	7	8	8	9	10	12	13	14	-

8. Hangers used to support piping 2 inches and larger shall be fabricated to permit adequate adjustment after erection while supporting the load.
9. Pipe hangers, inserts and supports shall conform to MSS SP-58, except as specified as follows:
    a. Types 5, 12, and 26 shall not be used.
    b. Type 3 shall not be used on insulated pipe which has a vapor barrier. Type 3 may be used on insulated pipe that does not have a vapor barrier if clamped directly to the pipe and if the clamp bottom does not extend through the insulation and the top clamp attachment does not contact the insulation during pipe movement.
    c. Type 19 and 23 C-clamps shall be torqued per MSS SP-58 and have both locknuts and retaining devices, furnished by the manufacturer. Field-fabricated C-clamp bodies or retaining devices are not acceptable.
    d. Type 20 attachments used on angles and channels shall be furnished with an added malleable iron heel plate or adapter.
    e. Type 24 may be used only on trapeze hanger systems or on fabricated frames.
    f. Type 35 guides using steel, reinforced PTFE or graphite slides shall be provided where required to allow longitudinal pipe movement. Lateral restraints shall be provided. Slide materials shall be suitable for the system operating temperatures, atmospheric conditions and bearing loads encountered. Where steel slides do not require provision for restraint or lateral movement, an alternate guide method may be used. On piping 4 inches and larger, a Type 39 saddle may be welded to the pipe and freely rest on a steel plate. On piping under 4 inches, a Type 40 protection shield may be attached to the pipe or insulation and freely rest on a steel slide plate. Where there are high system temperatures and welding to piping is not desirable, then the Type 35 guide shall include a pipe cradle, welded to the guide structure, and strapped securely to the pipe. The pipe shall be separated from the slide material by at least 4 inches, or by an amount adequate for the insulation, whichever is greater.
    g. Except for Type 3, pipe hangers on horizontal insulated pipe shall be the size of the outside diameter of the insulation.

L. Seismic Bracing Requirements:

1. Piping and equipment shall be supported and braced to resist seismic loads and the seismic restraints shall be designed in accordance with the SMACNA Seismic Restraint Unit.

2. Conform to the seismic design requirements of the specified Building Code. Site seismic criteria can be found on Drawing 00 S-001 of the contract drawings.

M. Pipe Through-Penetrations:

1. Provide pipe sleeves where pipe passes through walls, floors, ceiling, roofs, and partitions. In new construction, sleeves will be installed, secured in proper position and location during construction by the trade whose element will be penetrated. Such trades include concrete, masonry, drywll and/or plaster in the case of framed construction. In existing construction, pipe sleeves shall be furnished and installed under this Section. Core drilled holes in masonry and concrete may be provided by this Section in lieu of pipe sleeves, however cored drilled holes in masonry shall have cavities completely grouted smooth under this Section. Furnish sleeves of sufficient length to pass through entire thickness of walls, floors, and roofs.
2. Pipe Penetrations Through Building Exterior Construction: Provide a mechanically adjustable segmented elastomeric seal, with sleeve sized as recommended by seal manufacturer.
3. Pipe Penetrations Through Building Interior Construction: Provide not less than 1½-inch space between exterior of piping or pipe insulation and interior of sleeve or core-drilled hole. Firmly pack space with rock wool insulation.
    a. For non-fire rated assemblies, seal at both ends of the sleeve or core-drilled hole with silicone.
    b. Seal both ends of penetrations through fire rated assemblies to maintain fire resistive integrity with UL listed fill, void, or cavity material. Install firestopping assembly in accordance with UL FRD systems, and as recommended by manufacturer. Completely fill voids flush with the surface. Firestopping for filling voids in floors in which smallest dimension of a void is 4 inches or more shall support the floor design load or be protected by a permanent barrier. Damaged, disrupted, or removed firestoppings shall be replaced with new firestoppings as specified in this Section.
4. Extend sleeves in floor slabs 2 inches above the finished floor, except sleeves are not required where drain, waste and vent piping passes through concrete floor slabs located on grade. Sleeves through walls shall terminate flush with the finished surface on either side of the wall.
5. Seismic-braced pipe
    a. Proper clearances between penetrating gas system piping and any barrier shall be provided. The penetration holes shall be sized such that the hole diameter is 2 inches larger for pipe diameters 1-inch nominal to 3-inch nominal, and 4 inches larger for 4-inch and larger nominal diameter pipe.
    b. All open space around seismically braced through-penetrations shall be protected by a Listed, flexible through-penetration seal system.

3.4 FIELD QUALITY CONTROL

A. After system installation has been completed and prior to initial operation, inspect piping and control wiring systems for compliance with Drawings, Specifications, and accepted submittals. Perform flushing and tests in compliance with the specified Plumbing Code with the additions

specified herein. Have piping accepted by the Engineer before insulating or otherwise concealing.

B. Test Procedures and Reports:

1. Test each new system to demonstrate compliance with the contract requirements. Tests shall be witnessed by the Engineer. Correct defects in the Work and repeat tests until Work is in compliance with contract requirements.
2. Prepare and submit procedures for all specified tests to the Engineer for acceptance prior to the planned preliminary tests. Test reports shall include accepted test procedures, test results, deficiencies identified, and recommended corrective actions. Provide a complete explanation including supporting documentation detailing the design deficiencies. State that no deficiencies are evident if that is the case.
3. Material and equipment used in testing shall be subject to inspection by the Engineer. Provide water, electricity, instruments, appliances, equipment, connecting devices, and personnel for the tests.
4. Gages used in pressure tests shall have been calibrated within the 6-month period preceding the tests. Leaks found during tests shall be repaired by replacing pipe and/or fittings and the system retested. Caulking of joints shall not be permitted.
5. Repair defects disclosed by tests or, if required by the Engineer, replace defective work with new work without additional cost. If any deficiencies are revealed during test, such deficiencies shall be corrected and the tests reconducted at no additional cost.
6. Test reports shall include accepted test procedures, test results, deficiencies identified, and recommended corrective actions. Provide a complete explanation including supporting documentation detailing design deficiencies. State that no deficiencies are evident if that is the case.
7. When tests have been completed and corrections made, submit signed and dated test reports.

C. Tests:

1. Domestic Water Piping and Service Water Piping Pressure Tests: Before applying insulation, and before the installation of fixtures, cap ends of each system and hydrostatically test each piping system at not less than 100 psig for a period of time sufficient for inspection of every joint in the system but in no case less than 2 hours. During the pressure test, there shall be no leakage or reduction in pressure.
2. Drain, Waste and Vent Piping Pressure Tests: Before the installation of fixtures, provide Drainage and Vent Water Test or Air Test in compliance with the specified Plumbing Code. Each test shall be for a period of time sufficient for inspection of every joint in the system but in no case less than 30 minutes. During the pressure test, there shall be no drop in water level or air pressure.
3. Backflow Preventer Tests: Backflow preventers shall be tested by a locally approved and certified backflow assembly tester. A copy of the test report shall be provided to the Engineerr prior to placing the domestic water system into operation.
4. Functional Testing: All control devices and signaling devices shall be tested individually to demonstrate proper operation. Test all control panel functions to demonstrate proper operation. Test all control system functions to demonstrate proper operation in

accordance with the specified control sequences. Monitoring signals to the facility Supervisory Control and Data Acquisition (SCADA) system shall be verified.

3.5 MANUFACTURER'S INSTRUCTIONS

A. Obtain instructions from the manufacturer for the proper method of installation and connection of the equipment that is to be installed. Obtain all information that is necessary to facilitate the Work and to complete the project.

3.6 DISINFECTION

A. Disinfect new potable water piping and existing potable water piping affected by the Work in accordance with this paragraph unless otherwise directed by the local health authority. The piping system shall be flushed with clean, potable water until dirty water does not appear at the points of outlet. With system valved off, fill piping system with not less than 50 ppm chlorine solution and allow solution to stand for 24 hours. Following the required standing time, flush solution from the system with potable water until maximum residual chlorine content is within the range of 0.2 to 0.5 ppm, or the residual chlorine content of potable water supply. Obtain at least two consecutive satisfactory bacteriological samples from water piping, analyzed by a certified laboratory, and submit results prior to the water piping being placed into service.

B. Where it is not possible to disinfect a potable water storage tank as specified above, the entire interior of the tank shall be swabbed with a solution which contains 200 ppm of available chlorine; and the solution shall than be allowed to stand 3 hours before the tank is flushed and returned to service.

C. For a potable water filter or similar device, the dosage shall be determined by the Department of Health.

3.7 PAINTING

A. Field painting of above ground piping shall be provided under Section 09941 – Field Painting.

B. Field Painting shall not be applied until after installation and testing is complete.

3.8 CONTRACT CLOSEOUT

A. Provide in accordance with Section 01700 – Contract Closeout.

END OF SECTION

THIS PAGE INTENTIONALLY LEFT BLANK

SECTION 15806

HEATING, VENTILATING AND AIR CONDITIONING

PART 1 - GENERAL

1.01 DESCRIPTION:

A. Provide new heating, ventilating and air conditioning systems as indicated. The Work of this Section shall include all labor, materials, tools, equipment and appurtenances, and performing all operations necessary to furnish and install complete and operable systems in accordance with this section of the Specifications, the Drawings, and the codes and standards listed herein.

1.02 REFERENCES:

A. Except as specified herein, the latest edition of the standards listed below form a part of this Specification to the extent referenced in this Section. Where earlier editions of standards are adopted as referenced in applicable codes, those shall govern. The publications are referred to within the text by the basic designation only.

B. In each of the standards referred to herein, consider the advisory provisions to be mandatory, as though the word, "shall" had been substituted for "should" wherever it appears.

C. Air Conditioning, Heating and Refrigeration Institute (AHRI):

1. 210/240: Performance Rating of Unitary Air-Conditioning and Air-Source Heat Pump Equipment

2. 270: Sound Rating of Outdoor Unitary Equipment

3. 340/360: Standard for Commercial and Industrial Unitary Air-Conditioning Equipment and Heat Pump Equipment

4. 350: Sound Rating of Non-Ducted Indoor Air-Conditioning Equipment

5. 410: Forced-Circulation Air-Cooling and Air-Heating Coils

6. 430: Central-Station Air-Handling Units

7. 440: Room Fan-Coils

8. 880: Air Terminals

9. ARI Guideline D: Application and Installation of Central Station Air-Handling Units

D. Air Movement and Control Association International (AMCA):

1. 210: Laboratory Methods of Testing Fans for Aerodynamic Performance Rating

2. 99: Standards Handbook

E. American Society of Heating, Refrigeration and Air Conditioning Engineers (ASHRAE):

1. 15: Safety Standard for Refrigeration Systems

2. 34: Designation and Safety Classification of Refrigerants

3. 52.2: Method of Testing General Ventilation Air-Cleaning Devices for Removal Efficiency by Particle Size

4. 68: Laboratory Method of Testing to Determine the Sound Power in a Duct

F. American Society of Mechanical Engineers (ASME):

1. B1.1: Unified Inch Screw Threads (UN and UNR Thread Form)

2. B16.4: Cast Iron Threaded Fittings

3. B16.5: Pipe Flanges and Flanged Fittings

4. B16.9: Factory-Made Wrought Steel Butt- Welding Fittings

5. B16.11: Forged Fittings, Socket-Welding and Threaded

6. B16.15: Cast Copper Alloy Threaded Fittings

7. B16.18: Cast Copper Alloy Solder Joint Pressure Fittings

8. B16.21: Nonmetallic Flat Gaskets for Pipe Flanges

9. B16.22: Wrought Copper and Copper Alloy Solder Joint Pressure Fittings

10. B16.39: Malleable iron Threaded pipe Unions

11. B16.24: Cast Copper Alloy Pipe Flanges and Flanged Fittings Class 150, 300, 400, 600, 900, 1500, and 2500

12. B18.2.1: Square and Hex Bolts and Screws (Inch Series)

13. B18.2.2: Square and Hex Nuts (Inch Series)

14. B31.1: Power Piping

15. B31.5: Refrigeration Piping and Heat Transfer Components

16. B31.9: Building Services Piping

17. B40.1: Pressure Gauges and Gauge Attachments

G. American Society for Testing and Materials International (ASTM):

1. A36: Carbon Structural Steel

2. A53: Pipe, Steel, Black and Hot-Dipped, Zinc-Coated, Welded and Seamless

3. A123: Zinc (Hot-Dip Galvanized) Coatings on Iron and Steel Products

4. A167: Stainless and Heat-Resisting Chromium-Nickel Steel Plate, Sheet, and Strip

5. A193: Alloy-Steel and Stainless Steel Bolting Materials for High Temperature Service

6. A194/A194M: Carbon and Alloy Steel Nuts for Bolts for High Pressure or High Temperature Service or Both

7. A234: Wrought Carbon Steel Pipe Fittings

8. A307: Carbon Steel Bolts and Studs, 60000 PSI Tensile Strength

9. A312: Specification for Seamless and Welded Austenitic Stainless Steel Pipes

10. B88: Seamless Copper Water Tube

11. B117: Operating Salt Spray (Fog) Apparatus

12. B209: Aluminum and Aluminum-Alloy Sheet and Plate

13. B280: Seamless Copper Tube for Air Conditioning and Refrigeration Field Service

14. B395: Standard Specification for U-Bend Seamless Copper and Copper Alloy Heat Exchanger and Condenser Tubes

15. D402: Standard Test Method for Distillation Cut-Back Asphaltic (Bituminous) Products

16. D520: Zinc Dust Pigment

17. D1654: Evaluation of Painted or Coated Specimens Subjected to Corrosive Environments

18. D1785: PolyVinyl Chloride (PVC) Plastic Pipe, Schedules 40, 80, and 120

19. D2235: Standard Specification for Solvent Cement for Acrylonitrile-Butadiene-Styrene (ABS) Plastic Pipe and Fittings

20. D2466: PolyVinyl Chloride (PVC) Plastic Pipe Fittings, Schedule 40

21. E84: Surface Burning Characteristics of Building Materials

22. F104: Standard Classification System for Nonmetallic Gasket Materials

23. F1282: Polyethylene/Aluminum/Polyethylene (PE/AL/PE) Composite Pressure Pipe

H. American Welding Society (AWS):

1. A5.8/A5.8M: Filler Metals for Brazing and Braze Welding

I. Copper Development Association (CDA):

1. A4015: Copper Tube Handbook

J. Manufacturers Standardization Society of The Valve and Fittings Industry (MSS):

1. SP-58: Pipe Hangers and Supports - Materials, Design, Manufacture, Selection, Application and Installation

2. SP-67: Butterfly Valves

3. SP-70: Cast Iron Gate Valves, Flanged and Threaded Ends

4. SP-71: Gray Iron Swing Check Valves, Flanged and Threaded Ends

5. SP-80: Bronze Gate, Globe, Angle and Check Valves

6. SP-85: Cast Iron Globe & Angle Valves, Flanged and Threaded Ends

7. SP-110: Ball Valves Threaded, Socket Welding, Solder Joints, Grooved and Flared Ends

K. National Fire Protection Association (NFPA):

1. 90A: Installation of Air Conditioning and Ventilating Systems

L. Sheet Metal and Air Conditioning Contractors' National Association (SMACNA):

1. HVAC Duct Const Stds: HVAC Duct Construction Standards - Metal and Flexible

2. HVAC Install Fire Damper: Fire, Smoke and Radiation Damper Installation Guide for HVAC Systems

3. Seismic Restraint Mnl: Seismic Restraint Manual: Guidelines for Mechanical Systems

M. Underwriters Laboratories UL:

1. 94: Tests for Flammability of Plastic Materials for Parts in Devices and Appliances

2. 181: Factory-Made Air Ducts and Air Connectors

3. 1995: Heating and Cooling Equipment

4. 441: Safety for Gas Vents

5. 508: UL Standard for Safety Industrial Control Equipment

6. 555: Fire Dampers

7. 555S: Smoke Dampers

8. 705: Power Ventilators

9. 723: Test for Surface Burning Characteristics of Building Materials

10. 726: Safety Oil-Fired Boiler Assemblies

11. 795: Commercial-Industrial Gas Heating Equipment

12. 900: Air Filter Units

13. FRD Fire Resistance Directory

1.03 SUBMITTALS:

A. Submit the following in accordance with Section 01300.

1. Shop Drawings:

a. Ductwork and accessories fabrication and assembly details.

2. Product Data - Annotate descriptive data to show the specific manufacturer, model, type, size, capacity, curves, wiring diagrams, options, etc. of each item.

   a. Pipe anchors and guides

   b. Hangers and supports

   c. Electric unit heaters

   d. Fans

   e. Dehumidifier

   f. Ductwork

   g. Ductwork accessories

3. Certification: Submit documentation certifying completion of the following items in compliance with this Section.

   a. Equipment tests

4. Operation and Maintenance Manuals - Prepare manuals in accordance with Section 01730.

   a. Electric unit heaters

   b. Fans

   c. Dehumidifier

1.04 QUALITY ASSURANCE:

A. Provide in accordance with Section 01400 and as specified herein.

B. Provisions:

1. Drawings and Specifications direct attention to certain features of equipment, but do not purport to cover all details entering into design and construction of the equipment or appurtenances.

2. Consideration shall be given only to products of manufacturers who demonstrate successful experience in manufacture, operation, and servicing equipment of type, size, performance, and reliability equal to that specified. Equipment and components shall be the product of a single manufacturer insofar as possible.

3. Equipment furnished shall fit within the space allocated with adequate clearance for proper operation and maintenance.

C. Workmanship and Design:

1. Provide equipment such that all parts are designed for continuous and uninterrupted service, and such that lubrication, adjustment, or replacement of parts is possible without manufacturer's assistance. Corresponding parts of multiple units shall be interchangeable.

2. Install equipment that complies with state, local and federal codes and regulations.

1.05 DELIVERY, STORAGE AND HANDLING:

A. Provide in accordance with Section 01610 and as specified herein.

B. Shipping:

1. Equipment, material and spare parts are to be shipped completely assembled except where partial disassembly is required by transportation regulations or for protection of components.

C. Receiving:

1. Inspect and inventory items upon delivery to site.

2. Store and safeguard equipment, material and spare parts in accordance with manufacturer's recommendations.

1.06 COOPERATION AND COORDINATION WITH OTHER TRADES:

A. Work shall be performed in cooperation with other trades on the project and so scheduled as to allow efficient completion of the project. Materials and equipment shall be installed as fast as conditions will permit and installed promptly when and as directed.

B. Furnish layout information and shop drawings necessary to permit other trades affected by the Work to install their work properly coordinated and without delay.

C. Where there is evidence that Work installed interferes with the work of other Sections, assist in working out space conditions to make satisfactory adjustments.

D. With the acceptance of the Engineer, make reasonable modifications in Work specified under this Section of the Specifications required to coordinate with normal structural interference's, or for proper execution of specified work.

E. If work is installed before coordinating with other trades so as to cause interference with the work of such trades, make all necessary changes in Work under this Section of the Specifications.

F. Protect all materials and work of other trades from damage that may be caused by the Work required under this Section of the Specifications and be responsible for repairing any damages caused by such work.

G. Follow Drawings in layout work. Check drawings of, and coordinate with, other trades to verify special provisions, installation requirements and spaces in which Work provided under this Section of the Specifications will be installed. Maintain maximum headroom or space conditions at all points. Where headroom or space conditions appear inadequate, notify the Engineer before proceeding.

1.07 ELECTRICAL WORK:

A. All power including wiring, conduit and connections to equipment will be furnished and installed by Division 16. Motor starters indicated or specified to be factory-furnished shall be factory wired as an integral part of packaged mechanical equipment. Motor starters that are not integral with the mechanical equipment served shall be furnished, mounted and power wired by Division 16. Safety disconnect switches will be furnished, mounted and wired by Division 16, unless indicated to be factory furnished (and wired) as an integral part of packaged mechanical equipment.

B. All equipment furnished under this Section requiring motors shall have motors factory furnished and installed by the manufacturer of the equipment served and shall be mounted and aligned so as to run free and true. Provide motors and all associated internal wiring for mechanical equipment as an integral part of the equipment. Motors shall be in accordance with Section 16050.

C. When power required for equipment furnished are larger than indicated on the Drawings, the cost of additional electrical service and related work shall be included under the Section that furnished that equipment.

1.08 CODES, PERMITS AND FEES

A. Except for additional requirements as specified or indicated under the Work of this Section, materials, workmanship and equipment shall conform to the governing edition of the following regulations, and agency requirements.

1. State Local Building Codes including, but not limited to, the Massachusetts Building Code, Massachusetts Electrical Code, Massachusetts Mechanical Code, and Massachusetts Fire Safety Code**.**

2. Massachusetts Department of Public Health

3. Massachusetts Department of Energy and Environmental Protection

4. Local Fire Department

5. Occupational Safety and Health Authority (OSHA)

6. Any other local codes or requirements of Authorities Having Jurisdiction.

B. Pay for all fees and give all notices, file all plans, obtain all permits and licenses, and obtain all necessary approvals from Authorities Having Jurisdiction. Deliver all certificates of inspection to the Authorities Having Jurisdiction. No Work shall be covered before examination and approval by Authorities Having Jurisdiction. Replace imperfect or condemned work to conform to inspectional requirements, satisfactory to the Architect, Owner, Engineer and Authorities Having Jurisdiction without extra cost to the Owner. If Work is covered before inspection and acceptance, pay costs of uncovering and reinstalling the covering, whether it meets Contract requirements or not.

1.09 RECORD DRAWINGS

A. Prepare and maintain record drawings in accordance with Section 01700 – Contract Closeout and as specified herein.

B. As work progresses and for the duration of the Contract, maintain a complete and separate set of prints of drawings at the job site at all times. On a daily basis, record work completed and all changes from original contract drawings clearly and accurately, including work installed as a modification or addition to the original design such as change orders, instructions issued by the Engineer, or conditions encountered in the field.

C. Record drawings shall show as-built condition of ductwork and pipe routing and sizes, valve locations, details, control changes and corrections to schedules. Schedules shall show actual manufacturer and make and model numbers of installed equipment. Remove all superseded data to show the completed work.

D. The record drawings will be used as a guide for determining the progress of the Work installed. They shall be inspected on a regular basis and shall be corrected immediately if found inaccurate or incomplete. Requisitions for payment will not be accepted until the record drawings are accurate and up-to-date.

E. At completion of Work prepare a complete set of cad-drafted record drawings on bond paper showing all systems as actually installed. The Contract Drawing electronic CAD files will be made available for the HVAC Subcontractor's use to serve as backgrounds for the record drawings. Provide all drawings necessary to show the required record information. Submit cad-drafted prints to the Engineer for comments as to compliance with this Section. Make all modifications so noted by the Engineer.

F. Certify the accuracy of the record drawings. Record drawings shall become the property of the Owner.

G. When required by jurisdiction, submit the record set for approval by the Authority Having Jurisdiction in a form acceptable to the jurisdiction.

PART 2 - PRODUCTS

2.01 GENERAL:

A. Where applicable, all products requiring approval by the Massachusetts Division of Construction Services shall be so accepted. Where product types are available with energy star labeling, they shall be provided.

2.02 NAMEPLATES

A. Major equipment including unit heaters, convectors, air handling units, dehumidifiers, fans, and motors shall have the manufacturer's name, address, type or style, model or serial number, and catalog number on a plate secured to the item of equipment.

2.03 PIPE AND FITTINGS:

A. Non-Pumped Air Conditioning Condensate Drain Piping: All shall be type 1, grade 1, class 12454-B, Schedule 40 polyvinyl chloride (PVC) pipe conforming to ASTM D1785. Drain piping shall have Schedule 40 PVC socket fittings conforming to ASTM D2466. All joints between pipe and fittings shall be solvent cemented joints conforming to ASTM D2235 and ASTM D402. Provide protection for PVC piping exposed to weather from ultraviolet radiation.

B. Pumped Air Conditioning Condensate Tubing: All shall be Polyethylene resin tubing conforming to ASTM F1282.

2.04 HANGERS AND SUPPORTS:

A. Pipe Hangers:

1. Comply with MSS SP-58. Provide Types 1 and 7 as indicated with adjustable type steel support rods.

2. Provide Type 40 insulation protection shields for insulated piping.

3. All hanger rods shall be supported from the building structure as specified herein below. Attach to steel joists with Type 19 or 23 clamps and retaining straps. Attach to Steel W or S beams with Type 21, 28, 29, or 30 clamps. Attach to steel angles and vertical web steel channels with Type 20 clamp with beam clamp channel adapter. Attach to horizontal web steel channel with drilled hole on centerline and double nut and flat washer. Attach to wood framed structures using wood screws designed for use with threaded rod adapters, or through-bolted with double nut and flat washer. Attach to concrete with Type 18 insert or drilled expansion anchor.

4. Hangers, supports, rods and fasteners shall be hot-dipped galvanized steel, except shall be series 300 stainless steel in chemical storage areas. Hangers and supports in contact with bare copper tubing shall be copper plated or PVC coated.

B. Duct Hangers:

1. Duct hangers shall be in accordance with the "HVAC Duct Construction Standards" published by the Sheetmetal and Air Conditioning Contractors National Association, Incorporated (SMACNA).

2. All hanger rods shall be supported from the building structure same as specified for pipe hangers.

3. Support components in direct contact with ductwork shall be hanger straps. Except for straps, hangers and supports shall be hot-dipped galvanized steel, except shall be series 300 stainless steel in chemical storage areas. Rods and fasteners shall be hot-dipped galvanized steel, except shall be series 300 stainless steel in chemical storage areas. Hanger strap material shall match duct material except shall be series 300 stainless steel for fiberglass reinforced plastic ductwork. Provide minimum 1/8-inch thick neoprene rubber pads between dissimilar metals.

C. Where support points are required to avoid other work, provide a system of channels and angles between support points. Provide all necessary supports and cross framing. No part of piping, ductwork, breeching, equipment, and the building shall be stressed beyond its normal allowable working strength.

2.05 SUPPLEMENTARY STEEL AND CHANNELS:

A. Provide all supplementary steel and factory fabricated channels required for proper installation, mounting and support of all equipment and systems provided under this Section.

B. Channels and supplementary steel shall be of sufficient strength and size to allow only a minimum deflection in conformance with the manufacturer's requirements for the specific loading on the system installed herein.

C. All supplementary steel shall be ASTM A36 factory-formed standard mill finished structural shapes and shall be hot dipped galvanized after fabrication. Channels shall be hot dipped galvanized steel. Supplementary steel and channels shall be series 300 stainless steel in chemical storage areas.

2.06 PIPE SLEEVES:

A. Sleeves in Masonry and Concrete Walls, Floors, and Flat Roofs: Service weight cast iron or standard class ductile iron pipe, except shall be schedule 40 series 300 stainless steel in chemical storage areas.

B. Sleeves in Non-Masonry or Non-Concrete Walls, Floors, and Roofs: Hot-dip galvanized steel sheet, minimum 26 gage thickness.

C. Mechanically Adjustable Segmented Elastomeric Seals: Seals shall have linking type EPDM seal elements and Series 300 stainless steel hardware.

2.07 PIPE ESCUTCHEONS:

A. General: Provide pipe escutcheons at all pipe penetrations where penetration is exposed to view as specified herein with inside diameter closely fitting pipe outside diameter. Select outside diameter of escutcheon to completely cover pipe penetration hole in floors, wall, or ceilings; and pipe sleeve extension, if any. Escutcheons shall be held in place by internal spring tension or set screws.

B. Provide pipe escutcheons in finished spaces. Pipe escutcheons shall be of stainless steel, anodized aluminum or chrome-plated brass, solid or split hinged.

2.08 DRIP PANS:

A. Examine all Drawings and in cooperation with the Electrical Trade confirm the final location of all new electrical equipment to be installed in the vicinity of new and existing piping. All overhead piping containing liquid or vapor shall be no closer than 3 feet from a vertical line to electrical equipment including, but not limited to, electric motors, controllers, switchboards, panelboards, and similar equipment. Piping is not permitted in Electrical Rooms.

B. Where the installation of new HVAC systems piping does not comply with the requirements of the foregoing paragraph, where feasible the piping shall be relocated. Where not feasible, provide drip pans as specified below, except as otherwise indicated on the Drawings.

C. Provide drip pans fabricated from 14 gauge steel sheet and with edges turned up 2-1/2-inches. Reinforce top edge, either by structural angles or by rolling top over 1/4-inch rod made of same material as drip pan sheet metal. Provide hole and 1 inch threaded half coupling for low point drain. Provide hanging brackets of sufficient quantity made of same material as drip pan sheet metal for connecting threaded rods used for suspended drip pans. All joints shall be welded watertight and entire welded assembly sandblasted, degreased and hot dipped galvanized after fabrication.

D. Locate drip pans under piping passing over or within 3 feet horizontally of electrical equipment defined above, and elsewhere as indicated. Hang from structure with rods and building attachments, fasten rods to sides of drip pan. Carefully pitch to a convenient point for drainage. Brace to prevent sagging or swaying. Drip pans shall be installed within 12 inches below piping.

E. Provide 1 inch schedule 40 hot dipped galvanized steel drain line from each drip pan and terminate 12 inches above the floor with ball valve at nearest plumbing drain.

2.09 CORROSION RESISTANT ELECTRIC UNIT HEATERS:

A. Provide corrosion resistant forced-convection type, electric unit heater, rated as indicted on the equipment schedules.

B. Provide each heater unit complete with heating element, fan, contactor, and control transformer for 120-volt control.

C. Provide fan motors totally enclosed, oil sealed, and quiet in operation.

D. Provide each unit housed in a sheet-metal enclosure equipped with hanger suitable for ceiling or wall mounting as indicated. Finish enclosure with epoxy paint finish.

E. Provide adjustable louver and thermal cutout. Cutout to protect heater from overheating by opening the electric circuit and automatically reenergizing the heater when a safe temperature is reached.

F. Provide NEMA 4X industrial grade, corrosion resistant thermostat, adjustable from 40 to 80 degrees F.

G. Controls: All units must include a blower output and a time delay relay to remove residual heat before shut-off. The heater shall include built-in (integral) single pole thermostat (45 to 90°F) or wall mounted as indicated, in the equipment schedule, and a disconnect switch for positive power interruption.

H. Fan and Motor: All motors are to be resilient mounted and have built-in automatic reset thermal overload protection. Motors are to have plug-in electrical connections for ease of service. Motors and blowers are to be mounted as a single assembly with direct-drive connection on a rigid heavy gauge frame to prevent vibration. A blow-through design shall be used to assure quiet operation and maximum cooling for the blower motor.

I. Thermal Protection: A linear high temperature thermal cutout shall be provided for the full length of the heating element.

2.10 MECHANICAL DEHUMIDIFICATION UNITS

A. Unit Construction

1. Enclosure: The unit shall be fabricated per the following method: The base rails and supports shall be 12 gauge galvanneal steel channels; corner posts and side posts shall be formed of 18 gauge galvanneal steel; top panels and removable side panels shall be 18 gauge galvanneal steel. Removable panels with insert nut screw

sites shall be provided to allow easy access to all internal parts and components. The electrical control box and switch panel will be enclosed in a separate compartment located on the front left side when facing the return air filters and includes a hinged door that requires a tool to open.

2. Paint and Finish: Prior to painting, all metal parts shall be pretreated to remove oils and dirt and rinsed with an ionized solution. Painting shall be by a powder coat technique to assure positive adherence with a high impact finish. All sides of panels shall be painted after manufacturing. The paint shall be High Yield Polyester. The paint shall be rated to meet a minimum of 1,000-hour salt spray test (ASTM B117), have a minimum Direct Impact Resistance of 160 in-lbs (ASTM D2794), have a minimum flexibility of 1/4" Mandrel (ASTM D522, Method B) and a minimum 1,000-hour Humidity Resistance (ASTM D2247). The unit color shall be beige.

3. Unit Location

    a. The unit shall be designed for indoor installation.

4. Insulation

    a. The thermal and sound insulation shall be engineered polymer closed-cell foam insulation (EPFI). Indoor units shall have 3/8" thick insulation with an R value of 1.5.

    b. The insulation meets the following requirements:

        (1) NFPA 90A (2-2.4.2) and 90B

        (2) ASTM C1136 (Mold, Mildew, and Moisture Resistance)

        (3) ASTM E84 (Flammability / Smoke Developed) - 25/50

        (4) ASHRAE 90.1/189.1 (Energy Code)

    c. Conditioning

        (1) All insulation will be conditioned before PSA is applied.

        (2) Conditioning consists of 150° temperature for min of 72 hours.

        (3) Skin two sides.

    d. PSA

        (1) The PSA performance shall meet and/or exceed requirements specified.

(2) Use 3M brand #300 MP Acrylic Adhesive

(3) Minimum of 2 mils thick (3M # 6035)

e. Operation and Performance: Closed Cell Flexible Insulation performance must be able to operate in a temperature between -40° and 150°

B. Refrigeration System

1. Refrigerant: The system's operating refrigerant shall be R-407C.

2. Compressors: The compressors shall be a heavy-duty scroll-type. The compressor shall be equipped with high- and low-pressure safety switches, with internal protection from overheating. The compressor shall be externally vibration isolated.

3. Receiver: The unit shall include a refrigerant receiver. The receiver shall assist the unit in operating at the highest efficiency over a wide range of load conditions.

4. The unit shall include an automatic evaporator coil defrost cycle activated by time and suction temperature and terminated by time or suction temperature for low temperature operation.

5. The refrigeration system shall include a "pump down" cycle to prevent liquid refrigerant build-up in the low side of the system during the off cycle.

a. Fins: Fins shall be die-formed, aluminum and shall be damage resistant. Self-spacing fin collars provide maximum heat transfer. Fin spacing shall be 8 FPI (fins per inch) maximum. The coil shall be a maximum of 44" in height to avoid water carryover to the reheat coil and re-evaporation into the air stream.

b. Tubes: Coils shall be fabricated from seamless drawn copper. The inner tubing shall be designed to produce turbulent refrigeration flow to enhance the heat transfer process. The tubes shall be mechanically expanded to form, and interference fit with the fin collars for maximum heat transfer and stability.

c. Evaporator Bypass: A fixed evaporator opening shall be used to bypass a portion of the return air stream in applications without incoming outside air. When outside air is introduced to mix with the process stream a proportional damper will be mounted into the bypass opening. After the evaporator has dehumidified its portion of the air stream, the mixing of the bypass and evaporator air shall result in a temperature above the space dew point temperature.

d. Testing: Coils shall be leak tested at the factory

6. Internal Air-Cooled Condenser (Reheat Coil)

   a. The reheat coil shall be positioned with a minimum of 5" clearance from the DX coil to prevent water re-evaporation.

   b. The reheat coil shall be sized to reject the total heat of rejection developed by the refrigeration system in the dehumidification mode with an operating range between 32°F and 80°Fdb.

   c. Fins: Fins shall be die-formed aluminum and shall be damage resistant. Fins spacing shall be 12 FPI (fins per inch) maximum.

   d. Tubes: Coils shall be fabricated from seamless drawn copper. The tubes shall be mechanically expanded to form, and interference fit with the fin collars for maximum heat transfer and stability.

   e. Testing: Coils shall be leak tested at the factory

C. Auxiliary Heater

   1. No auxiliary heater

D. Ventilation Air

   1. The unit shall not be supplied with outside air.

E. Electrical Control Panel:

   1. The electrical control panel will be of adequate size to house all electrical controls and devices. The unit will be provided with single point power connection to service controls, fans, and compressors, factory wired to the power connection lug set. The electrical controls will include low-voltage transformers to supply 24 VAC control power, clearly labeled high- and low-voltage, terminal strips, high- and low-pressure control (with manual reset of the high-pressure cutout and automatic reset of low-pressure cutout), and an anti-short cycling timer to protect against compressor cycling.

   2. Short Circuit Current Rating (SCCR): The complete unit shall be rated in compliance with NEC® 110.10 and UL 1995 at nameplate voltage maximum, when protected by Class J, Class T or Class RK1 fusing. Electrical markings on the unit shall include, but not limited to the MCA (Minimum Circuit Ampacity), the MOPD (Maximum Over-Current Protection Device) and the SCCR.

F. Supply Fan:

   1. The supply fan shall be wired to run continuously except when in defrost mode of operation.

2. Supply fan shall be a double inlet forward curve fan. The fan housing shall be made of galvanized steel. The impeller is manufactured in galvanized steel with tab locked blades.

3. All bearings are selected for a minimum of a L50 Lifetime of 100,000 hours.

4. All fans shall be dynamically and statically balanced.

5. Blower Discharge: The unit's air discharge will be as shown on the drawing.

6. Blower Pulley Assembly: The driver pulley and the blower pulley will be made of cast iron. The motor sheave will be a variable pitch type to allow for field adjustment of CFM and external static.

G. Return Air Filters:

1. The system shall be provided with MERV 8 disposable filters consisting of a 4" pleated filter.

H. Control System:

1. A digital control system using a 16-bit microprocessor will be used to accurately and precisely control the dehumidification system and the space environment. The controller will include three (3) levels of password protection.

2. The controller will provide precise system control and feature an easy-to-read display which indicates actual operating and set points. The display will be remote mountable up to 1,640 feet from the unit. The controller will have a built-in occupancy timer.

3. Temperature Sensor: The unit shall include a temperature sensor to be field-installed.

4. Relative Humidity Sensor: The unit shall include a relative humidity sensor to be field-installed.

I. BMS Compatibility: Alarms shall be transmitted to the BMS.

J. Warranty

1. Manufacturer shall warrant all components for a period of two (2) years from the date of shipment.

K. Start-Up

1. Factory Assisted Start-up shall be performed by a local Factory Certified Service Company and shall include complete testing of all controls and unit operation.

The agency responsible for start-up shall record all information required on the manufacturer's start-up form and submit to the manufacturer for review and approval. Any installation discrepancies found shall be corrected before the unit is allowed to be in service.

2.11 SQUARE INLINE- FANS

A. Fan shall be duct mounted, belt driven centrifugal square inline.

B. The fan shall be of bolted construction utilizing corrosion resistant fasteners. Housing shall be minimum 18 gauge galvanized steel with integral duct collars. Bolted access doors shall be provided on three sides, sealed with closed cell neoprene gasketing.

C. Wheel shall be centrifugal backward inclined, constructed of 100% aluminum, including a precision machined cast aluminum hub. Wheel inlet shall overlap an aerodynamic aluminum inlet cone.

D. Motor shall be heavy duty type with permanently lubricated sealed ball bearings.

E. Bearings shall be heavy duty regreasable ball type in a pillow block cast iron housing selected for a minimum L50 life in excess of 200,000 hours at maximum cataloged operating speed.

F. Belts shall be oil and heat resistant, non-static type. Drives shall be precision machined cast iron type, keyed and securely attached to the wheel and motor shafts. Drives shall be sized for 150% of the installed motor horsepower. The variable pitch motor drive must be factory set to the specified fan RPM.

2.12 SHEET METAL DUCTWORK:

A. Provide all ductwork consisting of ducts, plenums and sleeves as required for the various air systems. All ductwork shall be sheet metal ductwork as specified herein.

B. Ductwork shall be constructed of aluminum conforming to ASTM B 209 alloy 3003-H14 for aluminum sheet and alloy 6061-T6 or equivalent strength for aluminum connectors and bar stock. All ductwork, except where specified otherwise herein, shall be fabricated in accordance with the "HVAC Duct Construction Standards for Metal Ducts" published by the Sheetmetal and Air Conditioning Contractors National Association, Incorporated (SMACNA). Apply SMACNA aluminum thickness adjustment to Pressure Class tables.

1. Rectangular Duct Construction: Provide 2 inch water gage positive/negative pressure class.

2. Round Duct Construction: Provide 2 inch positive/ negative pressure class.

3. All ductwork transverse joints and longitudinal seams shall be sealed in conformance with SMACNA seal classification B

C. Ductwork shall be true to the inside dimensions indicated on the Drawings. Cross break all duct panels over 12 inches wide. Support ducts rigidly and securely. Support horizontal ducts not over 8 feet on center. Ductwork shall be straight and smooth on the inside with neatly finished joints.

D. Elbows narrower than 16 inches shall be full radius elbows with inside radius equal to the dimension of the duct in the plane of the elbow or offset. Elbows wider than 16 inches may be full radius elbows or square elbows with air foil section turning vanes (Duct Manual Figure 2-3) and 6 inch inside radius. Vanes shall be "Runner" type 2, 3-1/4 inches on centers. Install outside vane flush against the outside of the elbow.

E. Transitions in ductwork shall be made with a 22-1/2 degree maximum angle projected from the straight duct side on a diverging transition and a 15 degree maximum angle projected from the straight duct side on a converging transition. Any conditions requiring deviations from the above shall be brought to the attention of the Engineer for acceptance. Duct aspect ratios shall not exceed 4 to 1.

F. All notches for connecting sections of duct, including longitudinal seam notches, shall not be cut any deeper than 1-7/8 inch to ensure tight corners in 2 inch deep slip joints.

G. Slips shall be at least two (2) gages heavier than the ductwork and all joints shall be made in a neat and workmanlike manner and in all cases shall be tight. All ductwork shall have all joints sealed with EC-800 as manufactured by 3M, hard cast or accepted equal. Sealing tapes shall not be permitted.

H. Sheet metal screws shall be stainless steel.

I. Flex connections: Provide neoprene-coated, flexible, airtight, fabric sleeves weighing approximately 30-oz. per square yard for ductwork connections to equipment.

2.13 DUCTWORK ACCESSORIES:

A. Wire Mesh Screens: 1/2-inch by 1/2-inch metal woven wire mesh. Weld screen to frame constructed of two (2) metal sheets with the screen sandwiched between the sheets. Frame shall have provisions and attachment components for mating to round and/or rectangular duct end-flange. Metal material for wire mesh and frames shall match the ductwork material in which installed unless specified otherwise on the Drawings. Sheetmetal screws shall be stainless steel.

2.14 VIBRATION ISOLATION (NON-SEISMIC):

A. General:

1. Provide field-installed vibration isolation as specified herein. Isolators shall be selected by the isolator manufacturer. So as to produce uniform deflection, furnish load data to the isolator manufacturer for the equipment to be supported indicating loads (weights) at each support point for the equipment.

2. Vibration isolation shall limit vibration transmissibility to a maximum 5 percent of the unbalanced force at lowest equipment speed.

3. Equipment indicated with external vibration isolation kit as an accessory are not part of this paragraph.

B. Manufacturer Responsibility:

1. Manufacturer of vibration equipment shall have the following responsibilities:

a. Guarantee specified isolation system deflections.

b. Provide installation instructions, drawings and field supervision to ensure proper installation and performance of systems.

C. Quality Assurance:

1. All vibration isolators shall have calibration markings or some method to determine adjustment, and the actual deflection under the imposed load after installation and adjustment.

2. All isolators shall operate within the linear portion of their load vs. deflection curves. Load vs. deflection curves shall be furnished by the manufacturer and shall be linear over a deflection range of not less than 50 percent above the design deflection.

3. The theoretical vertical natural frequency for each support point, based upon load per isolator and isolator stiffness, shall not differ from the design objectives for the equipment as a whole by more than 10 percent.

D. Description:

1. All vibration isolation devices shall be the product of a single manufacturer. Products of other manufacturers are acceptable provided their systems strictly comply with intent, structural design, performance, and deflections of the base manufacturer.

2. Acceptable manufacturers of vibration isolation products shall be: Mason Industries, Amber Booth Company, Peabody Noise Control, Korfund Dynamics Corporation, Vibration Mountings and Equipment, Vibration Eliminator Co., and Thybar Corporation provided they meet the requirements of this specification. Mason Industries model numbers have been used in this specification to establish quality of components but are in no way to limit competitive bidding by other manufacturers.

3. Refer to Table 15806-1 at the end of this article for application of the various types listed to appropriate equipment and efficiency level.

E. Vibration Isolator Types:

1. Type 1: Elastomer hanger rod isolator.

a. Molded (minimum 1-3/4 inch thick) neoprene element with projecting bushing lining the rod clearance hole.

b. Steel retainer box encasing neoprene mounting capable of supporting equipment up to four times the rated capacity of the element.

c. Minimum 0.35 inch static deflection at rated load.

d. Mason Industries Type HD

2. Type 2: Spring isolator

a. Minimum OD (outside diameter) to OH (compressed height) = 0.80:1.0

b. Reserve deflection (from loaded to solid height) of 50 percent of rated deflection.

c. Minimum 1/4-inch thick neoprene acoustical base pad on underside.

d. Designed and installed so that ends of springs remain parallel.

e. Non-resonant with equipment forcing frequencies or support structure natural frequency.

f. Hot dipped galvanized holders with cadmium plated hardware. Springs shall be cadmium plated or galvanized.

g. Minimum deflection as specified for Type C and Type D vibration bases herein below.

h. Mason Industries Type SLF

3. Type 3: Combination spring/elastomer hanger rod isolator.

   a. Spring and neoprene elements in a steel retainer box with the features as specified for Type 1 and 2 isolators.

   b. Minimum static deflection at rated load indicated in Table 15806-1 of this paragraph.

   c. Mason Industries Type DNHS

F. Duct Flexible Connectors: Provide 6 inch metal edge ventglas or thermafab flexible connections at fans, air handling units, and dehumidifier inlets and outlets. Leave one inch minimum slack, (1/2-inch standing fold). Duct openings shall be lined up on either side of flexible connections.

G. Execution:

1. General

   a. Isolation systems shall be installed in strict accordance with the manufacturer's written instructions. Vibration isolator shall not cause any change of position of equipment resulting in stress on equipment connections.

2. Equipment Installation

   a. Equipment shall be isolated as per Table 15806-1 at the end of this article.

   b. Additional requirements:

      (1) After the entire installation is complete, and under full operational load, the isolators shall be properly adjusted. Verify that there are no short circuits of the isolation. The equipment shall be free in all directions.

(2) Install equipment with flexibility in wiring.

Table 15806-1				
Equipment	**MTNG**	**ISOL**	**BASE**	**DEFL**
Dehumidifier	Ceiling or wall	Type 3	--	0.75 in.
In-Line Fans	Ceiling or wall	Type 3	--	0.75 in.
Unit Heaters	Wall	Type 3	--	0.75 in.
NOTES: 1. "ISOL" and "BASE" column indicates letter type as appears in the specs. 2. "MTNG" refers to method of support of equipment from the structure.				

PART 3 - EXECUTION

3.01 GENERAL:

A. Installation, workmanship, inspection, and testing shall be in accordance with the specified Codes with the additions specified herein.

3.02 MANUFACTURER'S INSTRUCTIONS AND SERVICES:

A. Obtain instructions from the manufacturer for the proper method of installation and connection of the equipment that is to be installed. Obtain all information that is necessary to facilitate the Work and to complete the project.

B. Services shall be provided for the satisfactory completion of installation, start-up, testing and training for those equipment and systems described herein below. Provide services of factory-trained service engineer, specifically trained on type of equipment specified.

1. Dehumidifier

C. Upon completion of all Work, furnish, in duplicate, certificates of inspection from equipment manufacturers stating that authorized factory engineers have inspected and tested the operation of their respective equipment and found same to be in satisfactory operating condition.

3.03 PIPING INSTALLATION:

A. Unless otherwise specified, pipe and fittings installation shall conform to requirements of ASME B31.9. Install piping straight and true to bear evenly on hangers and supports. Keep the interior and ends of new piping and existing piping affected by the Work thoroughly cleaned of water and foreign matter. Keep piping systems clean during installation by means of plugs or other accepted methods. When work is not in progress, securely close open ends of piping to prevent entry of water and foreign matter. Inspect piping before placing into position.

B. Piping and other apparatus shall not be installed in such a manner so as to interfere with the full swing of doors, movement of personnel and equipment, and access to other equipment.

C. Make provisions for pipe expansion and contraction with suitable anchors and offsets, or expansion loops. Install piping accurately aligned to allow freedom of movement in all planes without imposing buckling, swaying, and undue stress on any section of the piping, equipment and structure. Anchors and pipe guides shall be provided where necessary and indicated to localize expansion or prevent undue strain on piping. Anchors shall consist of heavy steel collars with lugs and bolts for clamping and attaching anchor braces, unless otherwise indicated. Anchor braces shall be installed using turnbuckles where required. Supports, anchors, or stays shall not be attached in places where construction will be damaged by installation operations or by the weight or expansion of the pipeline.

D. Unless otherwise specified or shown, connections to equipment shall be made with malleable-iron unions for steel pipe 2 inches or less in diameter. Connections between ferrous piping and copper piping shall be electrically isolated from each other with dielectric couplings or other accepted methods.

E. Pipe Joints:

1. Soldered Connections:

a. Soldering shall be performed in accordance with best soldering practice. Before soldering copper tubing joints, both the outside of the tube and the inside of the fitting shall be cleaned with a wire fitting brush until the entire joint surface is bright and clean. Provide suitable flux for use with solder. Surplus soldering material shall be removed at all joints. Piping shall be supported prior to soldering and not be sprung or forced.

b. For solder end valves, remove stems and washers and other items subject to damage by heat during installation. Reassemble valve after soldering is complete. Valves without heat sensitive parts do not require disassembly but shall be fully opened during soldering.

2. Brazed Connections:

a. Brazing of copper tubing joints shall be performed in accordance with AWS BRH, except as modified herein. During brazing, the pipe and fittings shall be continuously purged with a pressure regulated inert gas, such as nitrogen, to prevent the formation of scale. Before brazing, both the outside of the tube and the inside of the fitting shall be cleaned with a wire fitting brush until the entire joint surface is bright and clean. Brazing flux shall not be used. Surplus brazing material shall be removed at all joints. Piping shall be supported prior to brazing and not be sprung or forced.

F. Equipment Connections:

1. The size of the connections to each piece of equipment shall be not smaller than the connections on the equipment. No bushed connections shall be permitted. Change in sizes shall be made with reducers or increasers only.

G. Pipe Hangers and Supports:

1. Selection, fabrication and installation of piping hangers and supports shall conform with MSS SP-58.

2. Furnish and install safe and substantial means of support for all parts of the piping system. Attach all pipes securely to the structure in correct alignment and pitch, to prevent vibration and to effectively care for expansion and contraction.

3. All piping shall be hung to true alignment, using appropriate hanger arrangements. Wire and strap hangers shall not be permitted. Hangers shall be located so that piping and hangers shall be 6 inches clear from other piping, hangers, conduits, lighting fixtures, equipment, ceiling suspension systems, ductwork and other obstructions. Where insulation or other covering is provided, minimum clearance shall take into account such covering.

4. Supplementary steel and channels shall be firmly connected to the building construction in a manner accepted by the Engineer, or as otherwise shown on the Drawings. Equipment and piping shall not be supported from metal decking or plaster ceilings.

5. Maximum Spacing Between Supports:

a. Support piping within one foot on either side of flanged valves and in-line pumps.

b. Vertical Piping: Support metal piping at each floor, but at not more than 10 foot intervals, with pipe riser clamps or offset pipe clamps. Pipe shall be supported not more than 2 feet from end of risers.

c. Horizontal Piping: Locate supports within one foot on either side of each change of direction. Otherwise, support steel piping and copper tubing as follows:

Maximum Spacing (feet)									
Nominal Pipe Size (inches)	**One and under**	**1-1/4**	**1-1/2**	**2**	**2 ½**	**3**	**4**	**5**	**6**
Steel Pipe	7	7	9	10	11	12	14	16	17

Maximum Spacing (feet)									
Nominal Pipe Size (inches)	**One and under**	**1-1/4**	**1-1/2**	**2**	**2 ½**	**3**	**4**	**5**	**6**
Copper Tube	5	7	8	8	-	-	-	-	-

6. Hangers used to support piping 2 inches and larger shall be fabricated to permit adequate adjustment after erection while supporting the load.

7. Pipe hangers, inserts and supports shall conform to MSS SP-58, except as specified as follows:

   a. Types 5, 12, and 26 shall not be used.

   b. Type 3 shall not be used on insulated pipe which has a vapor barrier. Type 3 may be used on insulated pipe that does not have a vapor barrier if clamped directly to the pipe and if the clamp bottom does not extend through the insulation and the top clamp attachment does not contact the insulation during pipe movement.

   c. Type 19 and 23 C-clamps shall be torqued per MSS SP-69 and have both locknuts and retaining devices, furnished by the manufacturer. Field-fabricated C-clamp bodies or retaining devices are not acceptable.

   d. Type 20 attachments used on angles and channels shall be furnished with an added malleable iron heel plate or adapter.

   e. Type 24 may be used only on trapeze hanger systems or on fabricated frames.

   f. Except for Type 3, pipe hangers on horizontal insulated pipe shall be the size of the outside diameter of the insulation.

H. Pipe Through Penetrations:

1. Provide pipe sleeves where piping passes through walls, floors, and roofs. Core drilling of masonry and concrete may be provided by this Section in lieu of pipe sleeves when cavities in the core-drilled holes are completely grouted smooth. Furnish sleeves of sufficient length to pass through entire thickness of walls, floors and roofs.

2. Pipe Penetrations Through Building Exterior Construction: Provide a mechanically adjustable segmented elastomeric seal, with sleeve sized as recommended by seal manufacturer.

3. Pipe Penetrations Through Building Interior Construction: Provide not less than 1-inch space between exterior of piping or pipe insulation and interior of sleeve or core-drilled hole. Firmly pack space with mineral wool insulation.

   a. For non-fire rated assemblies, seal at both ends of the sleeve or core-drilled hole with silicone.

   b. Seal both ends of penetrations through fire rated assemblies to maintain fire resistive integrity with UL listed fill, void, or cavity material. Install firestopping assembly in accordance with UL FRD systems, and as recommended by manufacturer. Completely fill voids flush with the surface. Firestopping for filling voids in floors in which smallest dimension of a void is 4 inches or more shall support the floor design load or be protected by a permanent barrier. Damaged, disrupted, or removed firestoppings shall be replaced with new firestoppings as specified in this Section.

4. Extend sleeves in floor slabs 2 inches above the finished floor. Sleeves through walls shall terminate flush with the finished surface on either side of the wall.

5. Seismic-braced pipe

   a. Proper clearances between penetrating piping and any barrier shall be provided. The penetrations holes shall be sized such that the hole diameter is 2 inches larger for pipe diameters 1-inch nominal to 3 inch nominal, and 4 inches larger for 4 inch and larger nominal diameter pipe.

   b. All open space around seismically braced through-penetrations shall be protected by a Listed, flexible through-penetration seal system.

3.04 DUCTWORK AND EQUIPMENT INSTALLATION:

A. Installation shall be according to THE SMACNA HVAC DUCT CONSTRUCTION STANDARDS unless otherwise indicated. Duct supports for sheet metal ductwork shall be according to THE SMACNA HVAC DUCT CONSTRUCTION STANDARDS unless otherwise specified. Friction beam clamps indicated in THE SMACNA HVAC DUCT CONSTRUCTION STANDARDS shall not be used. Supports shall be attached only to structural framing members. Supports shall not be anchored to metal decking unless a means is provided and accepted for preventing the anchor from puncturing the metal decking. Where supports are required between structural framing members, suitable intermediate metal framing shall be provided. Where C-clamps are used, retainer clips shall be provided.

B. Dust Control:

1. To prevent the accumulation of dust, debris and foreign material during construction, temporary dust control protection shall be provided. The distribution

system (supply and return) shall be protected with temporary seal-offs at all inlets and outlets at the end of each day's work. Temporary protection shall remain in place until system is ready for startup.

C. Ductwork and equipment shall not be installed in such a manner so as to interfere with the full swing of doors, movement of personnel and equipment, and access to other equipment.

D. Hangers and Supports:

1. Furnish and install safe and substantial means of support for all equipment and parts of the ductwork system. Attach all ductwork and equipment securely to the structure.

2. All ductwork and equipment shall be hung to true alignment, using appropriate hanger arrangements. Hangers and supports shall be located so that ductwork and equipment and associated hangers and supports will be minimum 6 inches clear from other piping, hangers, supports, conduits, lighting fixtures, equipment, ceiling suspension systems, and other obstructions. Where insulation or other covering is provided, minimum clearance shall take into account such covering.

3. Supplementary steel and channels shall be firmly connected to the building construction in a manner accepted by the Design Builder, or as otherwise shown on the Drawings. Equipment and ductwork shall not be supported from metal decking.

4. Rod Sizes, MSS SP-58.

3.05 SEISMIC BRACING REQUIREMENTS:

A. Piping, ductwork and equipment shall be supported and braced to resist seismic loads where required by the specified Building Code. Provide seismic restraints in accordance with SMACNA Seismic Restraint Manual.

3.06 FIELD QUALITY CONTROL:

A. After system installation has been completed and prior to initial operation, inspect piping and ductwork systems for compliance with Drawings, Specifications, and accepted submittals. Perform flushing and tests in compliance with the specified Codes with the additions specified herein. Have piping and ductwork accepted by the Engineer before insulating or otherwise concealing.

B. Test Procedures and Reports

1. Prepare and submit procedures, material and equipment for all specified tests to the Engineer for acceptance prior to the planned tests. Material and equipment used in testing shall be subject to inspection by the Engineer.

2. Provide all material and labor required for testing. Instruments, test equipment, and test personnel required to properly conduct all tests shall be provided. Provide water, fuel, electricity.

3. Repair defects disclosed by tests or, if required by the Engineer, replace defective work with new work without additional cost. If any deficiencies are revealed during test, such deficiencies shall be corrected and the tests reconducted at no additional cost.

4. Test reports shall include accepted test procedures, test results, deficiencies identified, and recommended corrective actions. Provide a complete explanation including supporting documentation detailing the design deficiencies. State that no deficiencies are evident if that is the case. When tests have been completed and corrections made, submit signed and dated test reports.

C. Provide all materials, labor and power required for testing. Instruments, test equipment, and test personnel required to properly conduct all tests shall be provided as well as the necessary electricity, fuel and water.

D. Equipment Tests:

1. Provide field testing of equipment specifically listed in the paragraph entitled "Manufacturer's Instructions and Services" in this Section.

2. Tests shall be of such duration to ensure that the equipment has been installed, piped and wired correctly with no leaks or other improper operating conditions.

3. Upon completion, and before acceptance of the Work, the equipment shall be subjected to such operating tests as may be required to demonstrate satisfactory functional operation. Each operating test shall be conducted at such times as the Owner may direct.

4. Manufacturer's Test Plans: Within 120 calendar days after contract award, submit field acceptance test plans for each equipment type to be tested. Field acceptance test plans shall be developed by the equipment manufacturer detailing recommended field test procedures for that particular type and size of equipment. Field acceptance test plans developed by the installing contractor, or the equipment sales agency furnishing the equipment, shall not be acceptable. The Engineer will review and approve the field acceptance test plan for each of the listed equipment prior to commencement of field testing of the equipment. The Engineer will also review and approve the accepted field acceptance tests of the equipment and subsequent test reporting.

5. Coordinated Testing: Prepare test procedures for the simultaneous or integrated testing of HVAC controls as part of the Facility Completion Plan under Section

01801 to test interlock and interface with factory prewired and external controls for the equipment.

a. Prerequisite Testing: Equipment for which operating tests are dependent upon the completion of the work shall have that work completed as a prerequisite to testing work under this Section. Indicate in each field acceptance test plan when such prerequisite work is required.

b. Test Procedure: Procedures shall be structured to test the equipment factory prewired controls and external controls through all modes of control to confirm that the controls are performing with the intended sequence of control. Controller shall be verified to be properly calibrated and have the proper set point to provide stable control of their respective equipment.

c. Performance variables: Equipment manufacturers shall identify the acceptable limits or tolerance within which each tested performance variable shall acceptably operate.

d. Job Specific: Each test plan shall be job specific and shall address the particular conditions which exist in this contract. Generic or general preprinted test procedures shall not be acceptable.

e. Specialized components: Each test plan shall include procedures for field testing and field adjusting specialized components, such as hot gas bypass control valves, or pressure valves.

6. Testing: Each piece of equipment shall be field acceptance tested. Field acceptance test plans shall be developed by the equipment manufacturer detailing recommended test procedures for that particular type and size of equipment. The test reporting forms and resulting field acceptance test report shall be submitted to the Engineer for acceptance. Furnish a factory trained field representative authorized by and to represent the equipment manufacturer for the complete execution of the field acceptance testing.

a. All heating equipment testing shall take place when outdoor air temperature is 30 degrees F or less. Gas inspector and gas company representative shall also be in attendance when applicable.

b. Notice of tests: Conduct the manufacturer's recommended tests and the operational tests; record the required data using the accepted reporting forms. Notify the Engineer in writing at least 15 calendar days prior to the testing. Within 14 calendar days after acceptable completion of testing, submit each test report for review and acceptance.

c. Operational test: Conduct a continuous 8 hour operational test for each item of equipment. Equipment shutdown before the test period is completed shall

result in the test period being started again and run for the required duration. For the duration of the test period, compile an operational log of each item of equipment. Log required entries every two hours. Use the test report forms for logging the operational variables.

d. Report forms: Type data entries on test report forms. Completed test report forms for each item of equipment shall be reviewed, accepted, and signed by the HVAC Subcontractor's test director. The manufacturer's field test representative shall review, approve, and sign the report of the manufacturer's recommended test. Signatures shall be accompanied by the person's name typed.

e. Deficiency resolution: At no additional cost to the Owner, deficiencies identified during the tests shall be corrected in compliance with the manufacturer's recommendations and corrections retested in order to verify compliance.

3.07 TRAINING:

A. General: Orient training to the specific equipment and systems being installed under the contract. Coordinate training schedule with the Owner. Furnish audio-visual equipment and other training materials and supplies. For guidance, assume that the attendees have a high school education and are familiar with HVAC systems. Video and audio record and document all training sessions. Provide Owner with three copies of completed recordings in DVD disc format.

B. Training Course Documentation: Training shall be based on the accepted Operation and Maintenance Manuals. Deliver manuals for each trainee with one additional set for archiving at the project site. Ensure the manuals are submitted, accepted, and available to hand out to the trainees before the start of training. Submit planned training schedule, agenda, defined objectives, a detailed description of subject matter (synopses) for each lesson, and the instructor's background and qualifications to the Engineer at least 21 days prior to first training date. For each daily training session, submit an attendance sheet signed at end of the session by each trainee. The attendance sheet shall include an outline of subject matter covered by the session, the date of the session, and the printed name and signature of the instructor teaching the session. All submitted documents shall contain the name, address and logo of the company that the instructor represents.

3.08 EQUIPMENT ADJUSTING AND CLEANING:

A. Bearings shall be properly lubricated with oil or grease as recommended by the manufacturer.

B. V-belts and sheaves shall be tested for proper alignment and tension prior to operation and after 72 hours of operation at final speed. Belts on drive side shall be uniformly loaded, not bouncing.

C. Alignment of direct driven couplings shall be to within 50 percent of manufacturer's maximum allowable range of misalignment.

D. Equipment shall be wiped clean, with all traces of oil, dust, dirt, or paint spots removed. Temporary filters shall be provided for all fans that are operated during construction, and new filters shall be installed after all construction dirt has been removed from the building. System shall be maintained in this clean condition until final acceptance.

3.09 PAINTING:

A. Painting shall be provided under Section 09941. Paint the following:

1. Aboveground uninsulated pipe, fittings and valves.

B. Field touch-up all damaged factory applied coatings for material and equipment furnished under this Section in accordance with the paint manufacturer's recommendations.

C. Do not apply field touch-up until after installation and testing is completed and system accepted.

3.10 TEST AND ADJUSTMENTS:

A. Provide all materials and equipment required.

B. Adjustments:

1. Adjust controls and equipment to maintain conditions indicated, to perform the functions indicated, and to operate in the sequence specified.

C. Field Quality Control:

1. Demonstrate compliance of HVAC control systems. Furnish personnel, equipment, instrumentation, and supplies necessary to perform calibration and site testing. Calibrate test equipment in accordance with NIST standards. Ensure that tests are performed or supervised by competent employees of the control system installer or the control system manufacturer regularly employed in testing and calibration of control systems.

2. Testing shall include field tests and the performance verification test. Field test shall demonstrate proper calibration of instrumentation, input and output devices, and operation of specific equipment. The performance verification test shall ensure proper execution of sequence of operation.

3. The plan for each phase of field acceptance testing shall be approved in writing before beginning that phase of testing. Furnish written notification of planning testing to the Engineer at least 21 days prior to testing. Include proposed test

procedures with notification. The Subcontractor will not be allowed to start testing without written approval of test procedures. Test procedures shall consist of detailed instructions for complete testing to prove the performance of heating, ventilating, and air-conditioning system and control system. Include the following Subcontractor's Field Tests and Performance Verification Test in test procedures.

4. Submit original copies of data produced, including results of each test procedure, to the Engineer at the conclusion of each phase of testing. Tests are subject to supervision and approval by the Engineer. Do not perform testing during scheduled seasonal off-periods of heating and cooling systems.

5. Test Reporting: After completion or termination of field tests and again after the performance verification test, identify, determine causes, replace, repair or calibrate equipment which fails to meet the specifications; and deliver a written report to the Engineer. The report shall document test results, explain in detail the nature of each failure, and corrective action taken. After delivering the performance verification test report, the Subcontractor shall convene a test review meeting at the job site to present results and recommendations to the Engineer. As a part of the test review meeting, the Subcontractor shall demonstrate by performing appropriate portions of field tests or the performance verification test that failures have been corrected. Based on Subcontractor's report and test review meeting, the Engineer will determine either the restart point or successful completion of testing. Do not commence required retesting until after receipt of written notification by the Engineer. At the conclusion of retesting, repeat the assessment.

6. Subcontractor's Field Testing: Calibrate field equipment and verify equipment and system operation before system is placed on-line. Include the following tests in field testing.

    a. Wiring Integrity Tests: Test wiring for continuity, ground faults, and open and short circuits.

    b. System Inspection: Observe HVAC control system in shutdown condition. Check dampers and valves for proper normal positions. Document positions for the performance verification test report.

    c. Calibration Accuracy and Operation of Input Test: Verify correct calibration and operation of input instrument. For each sensor and transmitter, including for temperature, and dew point inputs, record the reading at the sensor or transmitter location using calibrated test equipment. Record the output reading provided by that sensor or transmitter. Document each of these locations and output readings for the performance verification test report. The test equipment shall have been calibrated within one year of the date of use in the field. Test equipment calibration shall be traceable to the

measurement standard of the National Institute of Standards and Technology (NIST).

d. Operation of Output Test: Check the operation of output to verify correct operation. Operate analog device to minimum (e.g., 4 mA) and maximum range (e.g., 20 mA), and measure and record actual output values.

e. Actuator Range Adjustment: With the controller, apply a control signal to each actuator and verify that the actuator operates properly from its normal position through to the full range stroke position. Record actual spring ranges and normal positions for modulating control valves and dampers.

7. Coordination with HVAC System Balancing: Final adjust the control system after air and hydronic systems have been balanced, minimum damper positions have been set, and a report has been issued.

8. Field Test Documentation: Before scheduling the performance verification test, provide field test documentation and written certification of completion to the Engineer that the installed system has been calibrated, tested, and is ready to begin the performance verification test. Do not start the performance verification test prior to receiving written permission from the Engineer.

Performance Verification Test: Conduct the performance verification tests to demonstrate that the control system maintains setpoints and that the system is adjusted for the correct sequence of operation. Conduct the performance verification test during one week of continuous HVAC and control systems operation and before final acceptance of work. Specifically, the performance verification test shall demonstrate that the HVAC system operates properly through the complete sequence of operation (e.g., seasonal, etc.), for specified control sequences. Demonstrate proper control system response for abnormal conditions for which there is a specified system or controls response by simulating these conditions. Demonstrate that hardware interlocks and safety devices work as designed. Demonstrate that the control system performs the correct sequence of control.

END OF SECTION

SECTION 16050

ELECTRICAL WORK - GENERAL

PART 1 – GENERAL

1.01 DESCRIPTION:

A. Provide operational systems for both normal and standby electric power systems, normal and emergency lighting systems, grounding systems, and other specified systems, including the installation and wiring of miscellaneous equipment and devices. Perform all Work and testing as indicated and specified to provide operationally ready electrical systems.

1. Provide conduit, wiring and connections for power, motors, motor controllers, control devices, lighting, control panels, instrumentation, and alarms and for equipment furnished by others as indicated on the Contract Drawings.

2. Provide temporary electrical systems required to keep the facility in operation during construction in accordance with specification Section 01015.

3. Provide temporary circuits, overcurrent devices, conduit and wiring, and other temporary electrical equipment required to complete the Work of Division 16. All other temporary electrical Work including site temporary power service shall be provided under Section 01500.

4. Disconnect and remove existing electrical systems indicated for demolition under this Contract.

5. Engage the services of an Independent Electrical Testing Firm to perform the field inspections, tests and adjustments specified in Section 16998.

6. Provide the services of a specialty firm to provide short circuit, coordination, and Arc Flash analysis for the electrical distribution system in accordance with Section 16359.

7. Install all raceways and equipment to meet the seismic requirements of Section 01900. Raceways supports and equipment anchoring shall be provided as specified in Section 16110.

8. All electrically powered equipment and devices provided under other

Sections are connected to electrical systems as part of the Electrical Work, as indicated. Provide all conduits, wiring and wiring terminations as indicated.

9. Provide all supervision, labor, materials, tools, test instruments or other equipment or services and expenses to test, adjust, set, calibrate, functionally and operationally check all Work and components of the various electrical systems and circuitry throughout the installation.

B. Provide set up, and maintain all derricks, hoisting machinery, staging, and planking and perform all hoisting required to complete the Electrical Work.

C. General Contractor to provide earth and rock excavation, backfill, concrete masonry, concrete reinforcement, and construction joints required for Electrical work.

D. Obtain all necessary permits required to complete the work of Division 16 – Electrical Work.

1.02 RELATED WORK:

A. Division 1: General Requirements

B. Division 16: Electrical

C. Provide conduit, wiring and terminations for all field-mounted instruments furnished and mounted under other Divisions, including process instrumentation primary elements, transmitters, local indicators, and control panels. Install vendor furnished cables specified under Specification Section 13310.

D. Provide conduits, wiring and terminations for power feeders for HVAC equipment provided under Division 15 and as shown on the electrical drawings.

E. Provide and install control stations shown on the electrical drawings local to equipment supplied under other divisions.

F. Provide and install safety disconnect switches shown on the electrical drawings local to equipment supplied under other divisions.

G. Motors shall be provided by the Contractor under Section 16220. All associated conduit, wire and terminations of motors shall be provided under Division 16.

1.03 REFERENCES:

A. National Electrical Safety Code (NESC)

B. Occupational Safety and Health Administration (OSHA)

1. OSHA Part 1910; Subpart S, 1910.308

2. OSHA Part 1926; Subpart V, 1926.950 through 1926.960

C. National Fire Protection Association (NFPA)

1. ANSI/NFPA 70B: Electrical Equipment Maintenance

2. NFPA 70E: Electrical Safety Requirements for Employer Workplaces

3. ANSI/NFPA 70: National Electrical Code

4. ANSI/NFPA 780: Lightning Protection Code

5. ANSI/NFPA 101: Life Safety Code

D. National Electrical Manufacturers Association (NEMA)

E. American National Standards Institute (ANSI)

1. ANSI C2: National Electrical Safety Code

2. ANSI Z244-1: American National Standard for Personnel Protection

F. Insulated Cable Consultants Association (ICEA)

G. Instrument Society of America (ISA)

H. Underwriters Laboratories (UL)

I. Factory Mutual (FM)

J. International Electrical Testing Association (NETA) – Acceptance Testing Specification for Electric Power Distribution Equipment and Systems (STD)

K. Institute of Electrical and Electronics Engineers (IEEE)

L. Massachusetts Electrical Code

M. All inspections and tests shall utilize the following references:

1. Project Design Specifications

2. Project Design Drawings

3. Project Short Circuit and Coordination Study

4. Manufacturer’s shop drawings submittals and instruction manuals applicable to each particular apparatus

1.04 SUBMITTALS:

A. Submit the following in accordance with Section 01300:

1. Shop Drawings and Data: Include manufacturer's drawings, bills of material, panel and equipment layouts, catalog data, schematics diagrams, interconnection diagrams, wiring diagrams and other documentary or descriptive information for each assembly submitted in one package.

a. Bills of material: Include a numbered list of all components, with manufacturer's name, catalog number, rating, and other identification. Place item number or identification on all other drawings where item appears.

b. Submit equipment installation instructions in separate submittals from other shop drawings.

c. Mark shop drawings and data submitted showing only items applicable to specific contract.

d. Make submission of drawings for those components where dimensions of equipment, location of conduit entrances, are required to facilitate construction in accordance with the construction schedule.

e. Include one-line diagrams, schematic diagrams, wiring diagrams, control sequence diagrams, relay diagrams, and metering. Submit only completed drawings showing all local and remote devices associated with each item. Submit one complete package of shop drawings. Partial submittals will be returned without action.

f. Submit time-current characteristic curves for all circuit breakers and fuses.

g. Submit instruction manuals for installation, operation, and maintenance of equipment, and parts list. Mark standard publications forming a part of this contract. Cross out, blank out, or otherwise delete non-applicable items. Submittals which do not clearly indicate items and features provided will be rejected.

h. Install permanent nameplates on all devices or pieces of equipment for which use or identification is not readily apparent, such as starters, relays, contactors, pushbuttons, indicating lights, and switches. Make sure position of nameplates are readable after equipment installation.

i. Provide services of the manufacturer's representative as specified in the applicable specification sections.

2. Submit inspection and testing forms for all electrical distribution equipment to be inspected and tested under this section.

3. Submit data sheets for the insulation resistance testing of conductors and equipment prior to performing operating testing. List all cables and equipment to be tested.

4. Provide space on data sheet forms to enter the results of testing, instruments used with serial numbers, and name of personnel performing testing. This data to be filled out during testing.

1.05 QUALITY ASSURANCE:

A. Install electrical Work in conformance with latest rules and requirements of National Fire Protection Association Standard No. 70 (National Electrical Code) and the New Hampshire Electrical Code.

1.06 INTERFERENCE AND ERRONEOUS LOCATIONS:

A. Verify in field, all data and final locations of Work installed under other Sections required for placing of electrical Work.

B. Do not run conduit in floor slabs or walls of buildings unless indicated.

1.07 SEISMIC REQUIREMENTS:

A. Conform to the requirements indicated on structural drawings and as specified in Section 01900 and as specified herein.

1.08 APPROVAL AND MARKING EQUIPMENT:

A. All devices and materials shall be listed and/or labeled by Underwriters' Laboratories, Inc., wherever standards have been established by that agency. Where Underwriters' Laboratories listing is not available for equipment, submit certified test reports of recognized, independent testing laboratory, approved by the local inspecting authority, indicating that equipment is in conformance with local code requirements or any other applicable requirements.

B. Mark equipment, devices and material with name or trademark of manufacturer and rating in volts and amperes and other information on a nameplate.

1.09 ELECTRICAL SYSTEM STUDIES:

A. Provide electrical system studies as specified in Section 16359. The specialty firm performing the study shall have no contractual or business ties with the electrical distribution system supplier.

B. The electrical system protection trip settings resulting from the study shall be provided to the electrical testing firm specified under Section 16998 to adjust and set the electrical system parameters in the field.

C. The Arc Flash Labels shall be generated by the specialty firm under Section 16359 and installed in the field by the Contractor under Division 16.

1.10 ELECTRIC SERVICE:

A. Electrical power system for the EDV Chamber operate at 480 volt, 3-phase, 3-wire, 60-Hertz.

1. Provide electrical low voltage distribution system that operates on 120/208 volt, 3-phase, 3 wire, 60-Hertz obtained from the power system by step down transformer(s).

1.11 CODE, INSPECTION AND FEES:

A. Equipment, materials, and installations shall comply with the requirements of the local authority having jurisdiction.

B. Obtain all permits and arrange for all inspections.

1.12 TESTS AND SETTINGS:

A. Test systems and equipment furnished under Division 16 and replace all defective Work and equipment at no additional cost. Refer to the individual equipment sections and Section 16998 for additional specific testing requirements. Employ the services of an Independent Testing Company, other than the manufacturer of the electrical distribution system, to perform the tests specified.

B. Field testing and commissioning shall be performed in accordance with the latest revisions of NETA Standard ATS "Acceptance Testing Specifications for Electrical Power Distribution Equipment and Systems" and Section 16998.

C. A typed test report for each component tested shall be submitted. The firm doing the testing shall include, in the report, their opinion whether or not the equipment being tested complies with the specification. Any discrepancies shall be noted in the concluding summary of the report. Test report forms shall be in compliance with NETA standards. Five complete copies shall be provided. Reports shall be signed by the person in charge of the field testing, an officer of the firm performing the tests and an officer of the Electrical Subcontractor.

D. In addition to the specific testing requirements listed in the individual sections, the following tests and settings shall be performed:

1. Mechanical inspection, testing and settings of circuit breakers, disconnect switches, motor starters, overload relays, control circuits and equipment for operation.

2. Check the full load current draw of each motor. Check ampere rating of thermal overloads for motors and submit a typed record of the same, including MCC cubicle location and driven load designation, motor service factor, horsepower, and Code letter. If incorrect thermal overloads are installed replace same with the correct size overload.

3. Check power and control power fuse ratings. Replace fuses if they are found to be of the incorrect size.

4. Check settings of the motor circuit protectors. Adjust settings to allow the motor to be started when under load conditions.

5. Check motor nameplates for correct phase and voltage.

6. Check rotation of motors prior to testing the driven load.

7. Check interlocking, control and instrument wiring for each system and/or part of a system to prove that the system will function as indicted by control schematic and wiring diagrams.

8. Verify all terminations at transformers, equipment, panels and enclosures by producing a 1, 2, 3 rotation on a phase sequenced motor when connected to “A”, “B” and “C” phases.

1.13 INTERPRETATION OF DRAWINGS:

A. Coordinate the conduit installation with other trades and the actual supplied equipment. Coordinate equipment conduits top and/or bottom entries as required for the equipment installation and as specified and indicated on the Contract Drawings.

B. Install each 3 phase circuit in a separate conduit unless otherwise indicated.

C. Install all conduits and wiring system as indicated on and matching the Contract drawings. Conduits shall not be combined unless otherwise indicated on Contract drawings.

D. Conduit shown exposed shall be installed exposed; conduit shown concealed should be installed concealed.

E. All fittings and boxes shall be provided for a complete raceway installation.

F. Verify the exact locations and mounting heights of lighting fixtures, switches and receptacles prior to installations.

G. Except where dimensions are shown, the locations of equipment, fixtures, and outlets indicated are approximate only. Obtain information relevant to the placing of electrical Work and in case of any interference with other Work.

H. Circuit layouts are not intended to show the number of fittings, pull boxes, or other installation details. Furnish all labor and materials to install and place in operation all power, lighting and other electrical systems indicated.

I. Raceways and conductors for the fire alarm and telephone systems are not indicated. Interconnection descriptions are indicated in their Riser Diagrams as indicated. Provide raceways and conductors, as required by the system manufacturer, for a complete and operating system. Raceways shall be installed concealed in all finished spaces and installed exposed in process spaces.

J. Raceways and conductors for lighting, switches, receptacles, and other miscellaneous low voltage power and signal systems as specified are not indicated. Raceways and conductors shall be provided for lighting, switches, and receptacles for a complete and operating system.

1.14 PHASE BALANCING:

A. The drawings do not attempt to balance the electrical loads across the phases. Circuits on motor control centers and panelboards shall be field connected to result in evenly balanced loads across all phases.

B. Field balancing of circuits shall not alter the conductor color coding requirements as specified in Section 16120.

1.15 SIZE OF EQUIPMENT:

A. Investigate each space in the structure through which equipment must pass to reach its final location. Coordinate shipping splits with the manufacturer to permit safe handling and passage through restricted areas in the structure.

B. The equipment shall be kept upright at all times during storage and handling.

C. Equipment shall not be physically larger than what is shown on the Contract Drawings.

1.16 EQUIPMENT IDENTIFICATION:

A. Identify equipment furnished under Division 16 with the name of the equipment it serves. Switchboard, motor control centers, control panels, panelboards, junction or terminal boxes shall have nameplate designations as indicated. Equipment nomenclature and identification system shall be as specified herein.

B. Nameplates shall be engraved, laminated plastic, 1/16-in. thick by 3/4-in by 2-1/2-in. with 3/16-in. high white letters on a black background.

C. Nameplates shall be screw mounted to NEMA 1 enclosures. Nameplates shall be bonded to all other enclosure types using a waterproof epoxy adhesive. Two sided foam adhesive tape shall not be used. Where the equipment size does not have space for mounting a nameplate the nameplate shall be permanently fastened to the adjacent mounting surface.

1.17 SEQUENCING AND SCHEDULING WORK AT EXISTING FACILITIES:

A. Remove and demolish equipment and materials in such a sequence that the existing and proposed EDV Chamber will function properly with no disruption of power. Continuous service is required on all circuits and outlets affected by the work detailed in the contract, except where the Owner will permit an outage for a specific time. Obtain Owner's consent before removing any circuit from continuous service.

B. Coordinate electrical power outages to the electrical systems and equipment with the Owner. Where duration of proposed outage cannot be allowed by the Owner, phase the work to allow the system or equipment to be re-connected to the electrical power system within the time frame allowed by the Owner or provide temporary power connections as required to maintain service to the systems or equipment. The temporary power can be from a generator, or another part of the facility not affected by the outage provided there is sufficient spare capacity.

PART 2 – PRODUCTS (NOT USED)

PART 3 - EXECUTION

3.01 REMOVAL AND RELOCATION OF MATERIAL AND EQUIPMENT:

A. Carefully dismantle and salvage electrical equipment, switches, fixtures, conduits, cables, wiring, boxes, as necessary to carry out proposed changes. Rehabilitate and relocate items of equipment as required and as indicated or specified.

B. Return all existing electrical equipment to the owner.

3.02 WORK IN EXISTING STRUCTURES:

A. In general, any or all existing electrical equipment and services are to remain in operation and shall not be disturbed unless otherwise noted in these Specifications and/or on the drawings or as required for the proper execution of the work.

B. In each area of the work, disconnect and carefully remove the existing electrical equipment and devices so noted. With the exception of items indicated as having to be re-used, all such existing equipment and devices shall be disposed of as specified herein. If not required by the Owner, remove them from the premises and site. All existing electrical equipment and devices indicated as not removed or abandoned are to be maintained in operation and any circuits disturbed by the construction shall be restored.

C. Maintain existing electrical services and systems to and in the buildings throughout the project and all “down-time” shall be scheduled at least two weeks in advance with the permission of the Owner and such scheduling shall be rigidly adhered to.

3.03 DEMOLITION:

A. Survey the existing electrical systems and equipment identified for removal with representatives from the other trades prior to performing any demolition work. Identify all conduit and equipment to be removed with tags or paint.

B. Where equipment is to be removed all associated ancillary components (e.g., solenoid valves, pressure switches, etc.) and associated wiring and conduit shall also be removed.

C. Equipment, building, or structures scheduled for complete demolition shall be made safe from electrical shock hazard prior to demolition. Disconnect and remove all electrical power, communications, controls, alarm, and signal system.

D. Existing underground electrical systems feeding equipment, building or structures scheduled for complete demolition shall be made safe, disconnected, and removed.

E. Equipment scheduled to be turned over to the Owner shall be carefully disconnected, removed, and delivered to the Owner where indicated. Provide labor, hoisting and transportation of the equipment. All other miscellaneous electrical materials, devices, etc., associated with the equipment being turned over shall be demolished and removed from the site.

F. Remove electrical work associated with equipment scheduled for demolition except those portions to remain or be reused.

G. Unless otherwise specifically noted, remove unused exposed conduit and support systems back to point of concealment including abandoned circuit above accessible ceiling finishes. Removed unused wiring back to source (or nearest point of usage).

H. Disconnect abandoned outlets and removed devices. Removed abandoned outlets if conduit services them is abandoned or being removed. Provide blank covers for abandoned outlets which are not removed.

I. Disconnect and remove abandoned electrical equipment unless otherwise indicated or specified.

J. Disconnect and remove abandoned luminaries. Remove brackets, stems, hangers, and other accessories.

K. Repair adjacent construction and finishes damaged during demolition and extension work.

L. Where electrical systems pass through the demolition areas to serve other portions of the premises, they shall remain or be suitably relocated and the system restored to normal operation.

M. Trace out existing wiring that is to be relocated or removed and perform the relocation or removed work as required for a complete operating and safe system.

N. Remove exposed conduits, wireways, outlet boxes, pull boxes and hangers made obsolete by the alterations, unless specifically designated to remain. Patch surfaces and provide blank covers for abandoned outlets which are removed.

O. All equipment, materials, controls, motor starters, branch and feeder breakers, panelboards, transformers, wiring, raceways, etc. furnished and installed to the temporarily keep circuits energized shall be removed when the permanent installation is fully operational.

3.04 PROTECTION OF ELECTRICAL EQUIPMENT:

A. Store equipment in compliance with manufacturer's recommendations and as specified herein.

B. Protect electrical equipment from the weather, especially from water dripping or splashing upon it, at all times during shipment, storage, and construction.

C. Do not store equipment outdoors.

D. Where equipment is installed or stored in moist areas, or unheated buildings, provide acceptable means to prevent moisture damage. Provide uniformly distributed source of heat in electrical equipment to prevent condensation and damage to electrical insulation systems.

3.05 DEFECTIVE OR DAMAGED EQUIPMENT:

A. Damaged equipment shall not be used. Equipment damaged in shipment, storage, installation or through other means shall be replaced without additional cost.

B. All equipment showing signs of damage shall be rejected regardless of dielectric test results.

C. All electrical equipment is considered “in storage” regardless of location until first energized. Manufacturer’s recommendations for storage precautions, conditions and care shall be followed.

D. Equipment that found to be damaged or failed the field inspection and acceptance tests specified under Section 16998 shall be replaced at no additional cost.

3.06 STARTING EQUIPMENT DATA LIST:

A. Obtain data from the equipment supplier shop drawing submittals or equipment nameplates and prepare a complete tabulation of all motors over 1/3 hp, electric heaters over 1 kW, air conditioning units and starting equipment, to be furnished on the project.

1. Include in tabulation form the following information:

a. Name and identification of equipment.

b. Manufacturer.

c. Horsepower or kilowatt rating.

d. Voltage.

e. Phase.

f. Speed.

g. Full load current.

h. Locked rotor current or code letter.

i. Type of enclosure (open drip-proof, totally enclosed, fan cooled, etc.).

j. NEMA size of starter or contactor.

k. Overload heater size.

l. Type of starter (full-voltage, reduced-voltage, autotransformer, etc.).

m. Breaker trip setting or fuse size.

n. Voltage of starter operating coil.

o. If starter is at a motor control center, list motor control center number.

2. Final acceptance of the electrical system is contingent upon submittal of the complete motor and equipment tabulation.

3. Arrange tabulation in groups by building location.

4. Furnish six copies of the tabulation to the Engineer when a submission is made.

3.07 EQUIPMENT ENCLOSURE:

A. The equipment enclosure classification of the plant areas is indicated within the Area Classification Schedule shown on the drawings. Provide all equipment, devices, installations, and material meeting the requirements of this schedule.

3.08 AS BUILT DRAWINGS:

A. At the completion of the Project, provide two sets of contract drawings that are marked to show the as-installed equipment, devices, conduits, underground duct lines locations, layouts, wiring and any revisions to the Contract Drawings occurred during construction. As built drawings markup shall be complete and provide a detailed and accurate representation of as installed field conditions of all equipment provided under this Contract.

3.09 INSTALLATION:

A. Provide conduit, wire and field connections for all motors, motor controllers, control devices, control panels and electrical equipment furnished under other Divisions.

1. All dimensions shall be field verified at the job site and coordinated with the Work of all other trades.

2. Provide electrical installation working drawings containing the following:

a. Concealed and buried conduit layouts, shown on floor plans. The layouts shall include locations of process equipment, motor control centers, transformers, panelboards, control panels and equipment, motors, switches, motor starters, junction or pull boxes, instruments and other electrical devices connected to concealed or buried

conduits.

b. Coordinate all Work with other divisions.

3.10 SLEEVES AND FORMS FOR OPENINGS:

A. Provide and place all sleeves for conduits penetrating floors, walls, partitions. Locate all slots for electrical Work and form before concrete is poured.

B. Exact locations are required for stubbing-up and terminating concealed conduit. Obtain shop drawings and templates from equipment vendors or other Subcontractors and locate the concealed conduit before the slab is poured.

C. Seal all openings, sleeves, penetration, and slots as specified in Section 16110.

3.11 CUTTING AND PATCHING:

A. Arrange installation of all Work such that cutting and patching is not required.

B. Do not cut joints, beams, girders, columns, or any other structural members.

3.12 CONTRACT CLOSEOUT:

A. Provide in accordance with Section 01700.

END OF SECTION

SECTION 16110

ELECTRICAL RACEWAY SYSTEMS

PART 1 - GENERAL

1.01 DESCRIPTION:

A. Provide raceway systems, with matching accessories, fittings, and boxes, as indicated and specified.

B. All raceway runs are indicated diagrammatically to outline general routing of raceway. Unless specifically identified for installation in concrete walls or slabs, raceways shall be run exposed with raceway supporting systems. Avoid interfering with pipes, ducts, structural members, or other equipment.

C. Raceways and conductors between lighting, switches, receptacles and other miscellaneous low voltage and signal systems as specified and indicated are not shown on the Plan View Drawings. Raceways and conductors shall be provided for complete and operating systems. Conduit and wiring descriptions are indicated on the Riser Diagrams for the Instrumentation Systems. Raceways shall be installed exposed unless otherwise indicated. Avoid conflicts with HVAC ducts, cranes, hoists, monorails, equipment hatches, doors, windows, structural beams, and process equipment.

D. Provide raceway systems in accordance with the following:

1. In NEMA 1, NEMA 4 or NEMA 12 areas, use galvanized rigid steel raceway systems, fittings, and accessories.

2. In NEMA 4X areas, use PVC coated rigid steel raceway systems, fittings, and accessories.

E. All raceway systems shall be installed in accordance with the criteria described in this section.

1. Use Type 316 stainless steel support systems for exterior application, NEMA 4 and in NEMA 4X areas.

2. NEMA 1 and NEMA 12 areas shall use hot dipped galvanized steel support systems.

F. Aluminum conduit and boxes shall not be used.

G. Provide fire stops for all electrical penetrations through fire rated walls and floors.

1.02 RELATED WORK:

A. Division 1: General Requirements

B. Division 16: Electrical

1.03 REFERENCES:

A. National Fire Protection Association (NFPA):

1. National Electrical Code (NEC)

B. Massachusetts Electrical Code

C. Underwriter's Laboratories, Inc. (UL):

1. U.L.-1: Electrical Flexible Metal Conduit

2. U.L.-6: Rigid Metal Electrical Conduit

3. U.L.-360: Electrical Liquid-Tight Flexible Steel

4. U.L.-651: Schedule 40 and 80 PVC Conduit

D. National Electrical Manufacturers Association (NEMA):

1. RN-1: Polyvinylchloride (PVC) Externally Coated Galvanized Rigid Steel Conduit and Intermediate Metal Conduit

2. TC-2: Electrical Plastic Tubing (EPT) and Conduit (EPC-40 and EPC-80)

1.04 SUBMITTALS:

A. Submit the following in accordance with Section 01300.

1. Submit shop drawings and manufacturer’s product data for all raceway systems, accessories, supports and miscellaneous hardware in accordance with the requirements of Section 16050.

2. A copy of this specification section with addenda and all referenced specification sections with addenda, with each paragraph check-marked to indicate specification compliance.

a) Failure to include a copy of the marked-up specification sections will result in return of the entire submittal without further review and consideration until

the marked-up specification are re-submitted with the entire package.

1.05 SEISMIC REQUIREMENTS:

A. All raceways shall be supported to Massachusetts Electrical Code requirements and conform to the requirements as indicated on the structural drawings and as defined in Section 01900.

PART 2 - PRODUCTS

2.01 ACCEPTABLE MANUFACTURERS:

A. Rigid Metal Conduit and polyvinylchloride-coated rigid steel conduit:

1. Triangle/PWC, Inc.

2. Perma-Cote Industries.

3. Republic Steel Corporation.

4. Robroy Industries.

5. Or equal.

B. Polyvinylchloride (PVC) Conduit:

1. Triangle/PWC, Inc.

2. Robroy Industries.

3. Carlon Electrical Sciences, Inc.

4. Or equal.

C. Flexible Conduit:

1. American Flexible Conduit Company.

2. Anamet, Inc.

3. Electri-Flex Company.

4. International Metal Hose Company.

5. Or equal.

D. Boxes and Fittings:

1. O.Z./Gedney Company.

2. Crouse-Hinds Electrical Construction Materials.

3. Appleton Electric Company.

4. Or equal.

E. Fiberglass-Reinforced Polyester Boxes:

1. Crouse-Hinds Electrical Construction Materials.

2. Fibox.

3. Hoffman Engineering Company.

4. Vynckier Enclosure Systems.

5. Or equal.

F. Support Systems:

1. Michigan Hanger Co., (O-Strut).

2. Thomas & Betts (Superstrut).

3. Unistrut Corp.

4. Or equal.

G. Fire Stop Material and Barriers:

1. Nelson Fire Stop Products.

2. Dow Corning Corporation.

3. 3 M Company.

4. Or equal.

2.02 MATERIALS AND COMPONENTS:

A. Rigid Metal Conduit:

1. Provide galvanized rigid metal conduit, each with a coupling on one end and thread protector on other end.

2. Hot-dip galvanize rigid steel conduit over entire length, along interior and exterior surfaces, including threads. Conduit shall conform to U.L.-6.

B. Flexible-Metal Conduit:

1. Provide flexible-metal conduit for use in NEMA-1 and NEMA-12 dry areas and match fittings, size, and material to rigid conduit to which it is connected. Flexible-metal conduit shall conform to U.L.-1.

2. Provide liquid-tight PVC coated flexible-metal conduit for use in NEMA-4 damp areas consisting of flexible-metal conduit, with liquid-tight, sunlight-resistant jacket extruded over the conduit. All fittings and accessories shall be PVC coated. Provide stainless steel, braided flexible conduit in NEMA 4X, corrosive areas. On larger than 1-1/4-in., furnish separate external ground wire. Liquid-Tight flexible-metal conduit shall conform to U.L.-360.

3. Provide stainless steel braided flexible conduit in all hazardous areas.

C. Polyvinylchloride (PVC) Conduit:

1. Provide PVC conduit, Schedule 40 conforming to NEMA Standard TC-2 and UL-651. PVC Schedule 40 conduit shall not to be used unless embedded in concrete and unless otherwise indicated on the drawings.

D. Polyvinylchloride-Coated Rigid Steel Conduit:

1. Provide polyvinylchloride-coated (PVC-Coated), rigid steel conduit conforming to NEMA Standard RN-1 consisting of hot-dipped galvanized rigid steel conduit, with a polyvinylchloride jacket bonded to the outside of all conduit surfaces with a nominal thickness of 40 mils meeting the requirements of NEMA RN-1, 3.1. The adhesive strength of the bonding to equal or exceed tensile strength of the coating. Provide couplings and fittings for this conduit conforming to the requirements of NEMA RN-1, 3.5.

2. A two-part urethane coating shall be applied to the interior of all conduit and fittings at a two mil thickness. The interior coating shall be flexible to allow field bending without cracking or flaking.

E. Boxes:

1. In NEMA 1 and NEMA 12 areas, provide standard, sheet-metal, outlet and junction boxes constructed of code-gauge, galvanized sheet steel. Size each box by the Massachusetts Electric Code.

2. Provide boxes containing fixture studs for hanging fixtures. Use concrete-tight boxes for installation in concrete. Do not use shallow boxes unless building construction is such that it is impossible to use standard-depth boxes.

3. Provide outlet boxes and fittings for hazardous locations conforming to U.L.-886 for class, group, and division indicated. Outlet boxes and fittings for hazardous areas shall also meet requirements of NEMA 4 areas.

4. Provide boxes and covers for polyvinylchloride-coated steel conduit made of fiberglass reinforced resin or, in classified areas and outside, galvanized cast iron, with a polyvinylchloride factory-applied coating over the galvanizing. Provide coating thickness of 40- mil. Boxes shall have hubs with extruded sleeves extending beyond the hub in the same manner as specified for conduit couplings. Provide cover screws of Type 316 stainless steel.

5. Provide cast boxes with covers or device plates that can be used for the area classification. Use cover screws of Type 316 stainless steel or high brass for iron boxes.

6. Provide boxes for use with polyvinylchloride conduit made of polyvinylchloride for use as junction boxes and provide high impact strength fiberglass-reinforced polyester boxes for use as device boxes, pull boxes, and terminal boxes. Size each box as required by the Massachusetts Electrical Code.

7. Where designated in the drawings, provide pull boxes above or below motor control center installations 20 inches by 20 inches by 12 inches deep. Boxes of dimensions 10 inches by 10 inches by 6 inches deep and larger shall be hung from ceilings constructed of angle or channel frames. Provide neoprene gaskets for sealing. Sectionalize covers longer than 36-in. to facilitate handling and gasket sectionalized covers where covers meet, using angle iron or channel cross members at the joint. Sheet metal shall be No. 12-gauge galvanized sheet steel. Fabricate interior angles and supports of galvanized steel. Provide each box with a grounding lug for connection to the nearest ground bus. Current capacity of ground lug shall be that required by the Massachusetts Electrical Code for the largest feeder entering the equipment.

8. Provide terminal blocks in all terminal boxes, panels, and instrumentation cabinets/panels requiring terminations as indicated or by wiring diagrams for equipment actually purchased. All terminals shall be rated 600V, 20 amp. All

terminals shall be screw type with provisions for white markers.

9. In NEMA 4 and NEMA 4X areas, provide 316L stainless steel outlet and junction boxes. Size each box as required by the Massachusetts Electric Code.

F. Fittings:

1. Provide cast-iron fittings of malleable iron or a mixture of gray iron and cast steel.

2. Provide expansion fittings where conduits cross expansion joints. Equip these fittings with grounding straps, clamps, and copper bonding jumpers.

3. For PVC conduit, provide PVC fittings that can be solvent welded to match conduit.

G. Supports:

1. Provide raceway component supports which are meant to function with the raceway and will support the raceway as indicated and meet the NEC and manufacturer's requirements.

2. Provide Type 316 stainless steel hangers, threaded rods, channels, straps, clips, and clamps for raceways provided in hazardous areas, NEMA-4 and NEMA-4X areas. Provide stainless steel bolts, nuts, and washers.

3. Provide hot dipped galvanized steel support system for raceways installed exposed in NEMA-1 and NEMA-12 areas.

4. Provide support for flexible conduit with components which do not compress and do not deform conduit.

2.03 FIRESTOP PRODUCTS:

A. Only firestop systems listed and tested to the UL 1479 Standard complete with prototype test data showing their individual applications shall be used.

B. Fire resistance ratings of installed firestop systems shall not be less than the fire resistance rating of the surrounding fire separation or firewall.

C. All listed system designs selected for use shall have a smoke seal incorporated within the rated firestop systems.

D. All firestop materials that will come directly in contact with plastic pipe or plastic coated wire shall have undergone Firestop Material compatibility testing by the Firestop Systems manufacturer and/or the pipe or wire manufacturer.

E. All firestop materials and smoke seals shall have elastomeric characteristics to allow for building settling and seismic movement.

F. All firestop materials and smoke seals shall be free of asbestos.

G. Site firestop systems must be installed in accordance with the UL 1479 Standard listed system design limitations.

H. All listed system designs used must provide a Flame (F), Temperature (T) and Hose (H) stream rating in accordance with those outlined in the most recent BOCA codes, include any additional requirements of the Work in this Section.

PART 3 - EXECUTION

3.01 INSTALLATION:

A. Provide all material, equipment, and labor to install the electrical raceway systems as indicated and as specified herein.

B. Perform all Work in accordance with the Massachusetts Electric Code.

C. Use no conduit less than 3/4-in. in diameter.

D. Install raceways, boxes, enclosures, and cabinets as indicated, according to manufacturer's printed instructions.

3.02 METHODS OF RESTRAINING RACEWAYS:

A. Utilize threaded rod with rod stiffeners and transverse channel braces at 45 degrees angle, at 15-ft. on center, maximum, and on one side of rod support.

B. Utilize longitudinal bracing with channel braces at 30 feet on center, maximum.

C. Strap raceways directly to transverse channel braces, using pipe strap with both ends of strap bolted into the channel brace.

D. Do not rigidly brace raceways to different parts of a building that may respond differently during an earthquake. Seismic restraints shall not limit expansion and contraction of the raceway support system.

E. Provide flexible connections for conduits 2-in. outside diameter or greater than when terminating to fixed equipment to prevent loss of raceway integrity in the event of an earthquake.

3.03 INSTALLATION OF FITTINGS:

A. Install expansion fittings and bonding jumpers wherever conduits cross structural expansion joints. Keep the fittings in line with conduit and install with regard to temperature so that full working range of expansion is available.

B. Do not install fittings to replace elbows and pull boxes. Use oversize fittings whenever large cable is installed, in order to maintain bending radius.

C. Terminate ends of all floor conduits installed for future use with couplings and readily removable plugs set flush with finished floor surface. Cap spare wall conduits at wall where they enter building.

D. Equip ends of all conduits with conduit fittings. Fit conduits terminating at motor control center or power distribution equipment, or in box above or below, with grounding type bushings, or solidly ground by locknuts or other fittings. Connect each grounding bushing to ground bus by a bare or green-covered copper wire. Do not use ground wire smaller than 12 awg. Install ground wire larger than 12 gauge when indicated. Where conduits terminate in unprotected areas or where bonding is required over expansion joint, flexible conduit or equivalent; use ground wires No. 6 Awg. copper or larger. Copper bonding jumpers are required over expansion joints.

E. Terminate conduits entering gasketed sheet-metal boxes or gasketed sheet-metal equipment enclosures with gasketed hubs.

F. Terminate conduits entering nongasketed sheet-metal boxes or enclosures with double locknuts and insulated bushings, or equivalent.

Make joints tight. Use raceway fittings compatible with raceway use and location.

3.04 INSTALLATION OF RACEWAYS:

A. Install exposed raceways parallel or at right angles to walls and ceiling beams. Make all changes in directions with bends, elbows, and pull boxes. Space parallel runs evenly throughout. Attach in place with hangers and fasteners. Ground raceways by connection to grounded enclosures, bonding, or other means, to obtain permanent low resistance path to ground throughout installation. Raceway sections in single run and in parallel runs shall be of same type and finish.

1. Run parallel or banked raceways together, on common supports.

2. Install raceways level and square. Provide minimum 7 ft. headroom.

B. Support raceways concealed above suspended ceilings from slab above ceiling in same manner as exposed raceways. Do not support raceways from ceiling supports.

C. Provide cast-in-place inserts in concrete to support all runs, unless otherwise permitted. Use stainless steel sleeve type concrete anchors for installing boxes, and conduit supports. Provide Type 316 stainless steel nuts, bolts, and washers, for use with concrete anchors. Wedge inserts shall not be used.

D. Support conduits by hangers or pipe straps spaced according to Massachusetts Electrical Code, but in no case more than 10 feet on centers.

E. Stub-Up Connections: Extend conduits through concrete floor for connection to freestanding equipment with an adjustable top or coupling threaded inside for plugs, and set flush with the finished floor. Extend conductors to equipment with PVC coated rigid steel conduit. Flexible metal conduit may be used 6 inches above the floor.

F. Provide sleeves passing through exterior walls and slabs which are wall entrance seals of watertight construction. Furnish watertight seal between slab and sleeve, and between sleeve and conduit or cable. Use wall-entrance seals of malleable iron with watertight sealing gland which may be tightened any time after installation.

G. Do not use dissimilar metals in conjunction with each other. Use insulation between adjoining surfaces so as to eliminate direct contact and any resultant electrolysis. Maintain electrical continuity of system. Use bituminous impregnated felt, heavy bituminous coatings, nonmetallic separators, or washers as insulation.

H. Install fittings to match raceway being used.

I. Install expansion fittings wherever conduits cross structural expansion joints. Keep fittings in line with conduit and install with regard to temperature so that full working range of expansion is available.

J. Where conduits pass through firewalls, grout hole around the conduit to the full depth of the material penetrated using U.L. listed fire stop material.

K. Provide separate metallic raceways for all low voltage instrumentation raceways 50 volts and below shielded wiring, data highway wiring, and fire alarm wiring and install 12-inches from control and power raceways.

L. Terminations: Where raceways are terminated with locknuts and bushings, align the raceway to enter squarely, and install the locknuts with dished part against the box; use two locknuts, one inside and one outside the box.

M. Where terminating in threaded hubs, screw the raceway or fitting tight into the hub so the end bears against the wire protection shoulder. Where chase nipples are used, align the raceway so the coupling is square to the box, and tighten the chase nipple so no threads are exposed.

N. Install pull wires in all empty raceways. Use No. 14 AWG zinc-coated steel or monofilament plastic line having 200-lb. tensile strength. Leave 12 inches of slack at each end of the pull wire.

O. Keep raceways 6 inches away from parallel runs of flues and steam or hot water pipes. Install horizontal raceway runs above water and steam piping.

P. Complete raceway installation before beginning conductor installation.

Q. Use temporary closures to prevent foreign matter from entering raceway.

R. Protect stub-ups from damage where conduits rise through floor slabs. Arrange so curved portion of bends is not visible above the finished slab.

S. Conduit in transition (from below to above grade, through walls and through concrete) shall be PVC coated rigid galvanized steel (PVC-RGS). The transition shall be made below grade at the final sweep before the transition for exposed conduit. PVC-RGS conduit shall extend one (1) foot minimum above transition finished floor.

3.05 BENDS:

A. Make all bends to prevent distortion of circular cross section. Field bent conduit shall have an inside radius of nine diameters.

B. The maximum number of bends in any single conduit run shall be in accordance with the Massachusetts Electrical Code requirements.

3.06 CUTTING, THREADING AND CONNECTING:

A. Make all field cuts in conduits squarely, file cut ends, ream to remove rough edges and thread in accordance with Massachusetts Electric Code. No running thread shall be permitted. Make all connections mechanically strong and tight, with connectors. Where conduit surface coating is damaged or removed in the cutting, threading or reaming process, restore the surface to its original condition.

3.07 CONDUIT CLEANING:

A. Clean conduits before and after installation, ream ends free of burrs, and free inside surfaces from all imperfections.

B. After installation of each new conduit run, snake the run with band to which is attached a tube cleaner with cylindrical mandrel of a diameter 85 percent of nominal diameter of conduit. Remove and replace all conduit through which mandrel will not pass.

C. Use a sponge with steel brush to clean steel conduit and use a sponge with nylon brush to clean PVC conduits.

D. After cleaning, protect ends of all conduit with standard caps to prevent entrance of water, concrete, debris, or other foreign substance.

3.08 CONDUIT DRAINAGE:

A. Pitch conduit to drain to outlet boxes or install so as to avoid trapping moisture. Where dips are unavoidable in exposed conduits, install fitting to match conduit system with drain hole at low point.

3.09 INSTALLATION OF BOXES:

A. Unless otherwise indicated, install NEMA 1 or NEMA 12 sheet metal boxes only in dry, accessible locations. Install NEMA 4 and 4X rated boxes in exterior concrete or masonry walls, in floor slabs, in basements, all other below grade locations and elsewhere as indicated. Unless otherwise indicated, cast metal boxes shall be used where vapor-tight fixtures are required, for all surface mounting of wall switches and receptacles and for all outdoor use.

B. Install boxes in conformance with all the requirements of Massachusetts Electric Code. Install boxes designed for type of construction involved. Support boxes in same manner as conduit. Size boxes to provide bending radius for wire or cable of eight times diameter or in accordance with Massachusetts Electric Code, whichever is larger.

C. Center all outlets in panels, or spaces and adjust to structural finish. Where specific locations are not indicated, locate outlets with respect to equipment served.

D. Place all outlet boxes, junction boxes and pull boxes, in accessible locations when they are installed above or behind plastered ceilings, furred spaces, or suspended ceilings. Install access panels. Mark all access panels for all boxes so panels can be readily located in future. Mark, using metal tabs or plastic buttons which cannot mark ceilings or walls, that can be used for type of construction being used.

E. Assemble cast-metal boxes with threaded conduit hubs in such manner that conduit connections and gasketed covers are watertight. Close all unused threaded openings with pipe plugs and compound.

F. Provide cast boxes with covers and device plates that can be used for the area classification. Install screws of Type 316 stainless steel or high brass for iron boxes.

3.10 FLEXIBLE CONNECTIONS TO MOTORS AND EQUIPMENT:

A. At all motors and electrically operated equipment to which conduit connections are made, install with a connection between end of conduit and terminal box of motor or other equipment.

B. Install the conduits in locations permitting direct connection to motors.

C. Make connections between rigid raceway and motor or equipment subject to vibration and adjustment using flexible conduit. Make each connection with one quarter bend so that no vibration can be transmitted beyond flexible connection.

D. Use maximum of 6 feet of flexible conduit for equipment subject to vibration, noise transmission, or movement; and for all motors. Use liquid tight flexible conduit in wet or damp locations. Install liquid-tight flexible metal conduit in areas subject to wetting due to fire protection sprinklers or broken or ruptured water line. Locate conduit to reduce the possibility of damage to the exterior flexible conduit jacket. Use fittings that screw into flexible conduit and provide gaskets. Install separate ground conductor across flexible connections.

3.11 FIRESTOP INSTALLATION:

A. Firestop and smoke seal gaps and holes in all fire separation and firewall construction through which conduit, wire, cable, pass as a result of Electrical Work using a Listed System Design.

B. In combustible construction, firestop and smoke seal all through electrical penetrations of the faces as above and firestop and smoke seal all penetrations that enter or exit (transverse) the edges of one fire separation into another fire separation. (i.e., where the header or sill plate is penetrated in the interior of a wall separation into the hollow ceiling or floor cavity of the adjacent separation.)

C. Apply firestop systems at unpenetrated electrical openings and sleeves installed for future use through fire separations and firewalls.

D. All Electrical items that pass through, transverse or terminate within fire separations or firewalls must be firestopped. Firestopping forms part of the Work of this Section.

E. All recessed electrical boxes or panels in fire separations shall be noncombustile (steel) and must be separated by one stud or joist cavity. Back to back installations and/or combustible (plastic) boxes and panels are not allowed unless the gypsum board trade has constructed a fire rated enclosure equal to that of the fire separation rating around each box or panel.

F. All holes or voids created in fire separations or firewalls for single penetrating wires, cables, and conduit the annular spare shall not exceed 1” (25mm) for penetrating items up to 2” (50 mm) in outside diameter. For penetrating items over 2” (50 mm) in outside

diameter the annular space must not exceed 1½" (37 mm).

G. All holes or voids created in fire separations or firewalls for multiple penetrating electrical items must have a fill ratio 50% of the overall void or hole size.

H. In all firestop systems that require mineral wood or ceramic fiber backer or filler materials, these materials must be dry and free of other contaminants before, during and after installation of sealant firestop materials. Alkaline water contamination of the backer or filler materials may cause corrosion of metallic penetrating items.

I. Apply firestop systems and smoke seals in strict accordance with manufacturer's instructions and Listed Systems Designs to provide temperature and flame rated seals, to prevent the passage of fire and smoke.

3.12 PROTECTION:

A. Provide protection and install in accordance with manufacturer printed instructions such that coatings, finishes, and enclosures are without damage or deterioration at completion of Project.

B. Repair damage to PVC with matching touch-up coating recommended by the manufacturer.

3.13 CHECKOUT AND TESTING:

A. Provide in accordance with Sections 16050 and 16998 and as specified herein.

B. Check overhead conduit system installation by using the following check list:

1. Conduits are supported on independent supports (i.e., not on process piping, pipe ways, or piping hangers).

2. Exposed conduits are run, parallel or perpendicular to structural members.

3. Conduits are routed far away from fire hazards and heat sources.

4. Conduits are supported at the specified intervals.

5. Pull boxes and fittings are installed so that covers are removable. Verify that covers are installed and tightly bolted with gaskets provided where needed.

6. Circular cross sectional area is same at conduit bends. Single bends do not exceed 90 degrees.

7. Conduits are terminated in threaded hubs or bushings to prevent damage to wire.

8. Conduits joints are tight.

9. Seal fittings and/or sealing compound is installed at moisture barriers to prevent entry of moisture and gases into equipment and/or where indicated.

10. Drains and conduit seals are installed on vertical conduit runs entering devices, equipment, and enclosures to prevent entrance of moisture and gases.

11. Flexible conduit is installed at motors and other equipment as specified. Verify that cabling and conduit runs are identified at each end.

3.14 CONDUIT SEALS:

A. Furnish and install sealant to maintain fire ratings of walls and floors in annular space between conduit and building finish.

B. Apply sealant after cable installation and all testing.

C. Furnish and install moisture/fireproof sealant in conduit interior and cable interstitial space where conduits enter/leave electric rooms, in all control panels, in all electrical enclosures, terminal boxes.

3.15 CONTRACT CLOSEOUT:

A. Provide in accordance with Section 01700.

END OF SECTION

SECTION 16120

ELECTRIC WIRES AND CABLES

PART 1 - GENERAL

1.01 DESCRIPTION:

A. Provide wires, cables, termination, and identification materials for complete electrical systems, as indicated and specified.

B. Perform tests on installed wire and cables in accordance with Section 16998.

C. Provide fire stops for all electrical penetrations routed through fire rated walls and floors.

1.02 RELATED WORK:

A. Division 1: General Requirements

B. Division 16: Electrical

1.03 REFERENCES:

A. American Society for Testing and Materials (ASTM):

1. B3: Soft or Annealed Copper Wire.

2. B8: Concentric-Lay-Stranded Copper Conductors, Hard, Medium-Hard, or Soft.

3. B33: Tinned Soft or Annealed Copper Wire for Electrical Purposes.

B. Massachusetts Electrical Code.

C. National Fire Protection Association (NFPA):

1. NFPA-70: National Electrical Code (NEC).

D. Underwriters Laboratories, Inc. (UL):

1. U.L. 44: Wires and Cables Rubber Insulated.

2. U.L. 83: Wires Thermoplastic-Insulated.

3. U.L. 854: Cables, Service Entrance.

4. U.L. 1479: Fire Tests of through Penetration Firestops.

E. National Electrical Manufacturer's Association (NEMA):

1. WC 5: Thermoplastic Insulated Wire & Cable.

2. WC 8: Ethylene-Propylene-Rubber-Insulated Wire & Cable.

1.04 SUBMITTALS:

A. Submit the following in accordance with Section 01300.

1. Submit shop drawings and manufacturer's product data for all cables, terminations, terminal blocks, lugs, connectors, fire proofing tape, identification tags, etc., in accordance with the requirements of Section 16050.

2. Submit the following data for fire stop material:

a. Manufacturer's Listed Systems Designs.

b. Manufacturer's Product Data Sheets.

c. Manufacturer's Materials Safety Data Sheets.

d. Manufacturer's printed instructions for installation on each proposed product. Identify where each material will be used at the Project site.

e. Manufacturer's prefabricated devices providing descriptions for identification at the Project site.

3. A copy of this specification section with addenda and all referenced specification sections with addenda, with each paragraph check-marked to indicate specification compliance.

a. Failure to include a copy of the marked-up specification sections will result in return of the entire submittal without further review and consideration until the marked-up specification are re-submitted with the entire package.

1.05 QUALITY ASSURANCE:

A. Firestop Materials and Smoke Seal materials shall have a flame spread rating of 25 or less, National Fire Protection Association (NFPA Class “A”).

1.06 EQUIPMENT IDENTIFICATION:

A. Each fiber shall be labeled at each termination point and all splice location including spares. Conductor or circuit identification shall be applied at specified points with circuit numbers or other identification stamped on terminal boards when provided, or on the cable itself in such a manner that the identification is visible around the cable’s circumference.

B. Each fiber shall be identified in junction boxes, pull boxes, manholes, handholes, terminal boxes, and cabinets. Where no termination is made, use a plastic-coated, self-adhesive, wire marker. Where termination is made, use a plastic, pre-printed sleeve wire marker. Paper self-adhesive wire markers are not acceptable.

1.07 SHOP TESTS:

A. Fiber optic cables and equipment shall be shop tested at the manufacturer’s plant in accordance with the manufacturer’s standard testing procedures. Shop tests shall be performed prior to shipment.

B. Submit manufacturer’s shop test reports.

PART 2 - PRODUCTS

2.01 ACCEPTABLE MANUFACTURERS:

A. 600V Cable:

1. Pirelli Cable Corporation.

2. Okonite.

3. The Rockbestos Company.

4. Or equal.

B. Metering and Instrumentation Wire, 600V:

1. The Rockbestos Company.

2. Okonite.

3. Pirelli Cable Corporation.

4. Or equal.

C. Cable Fireproofing Tape:

1. MAC Products, Inc.

2. 3M Company.

3. Thomas & Betts Company.

4. Or equal.

D. Fire Stop Material and Barriers:

1. Nelson Fire Stop Products.

2. Dow Corning Corporation.

3. 3 M Company.

4. Or equal.

E. Fiber Optic Cable:

1. Belden

2. Corning Cable system

3. OFS Fiber

4. Or acceptable equivalent product

2.02 MATERIALS AND COMPONENTS:

A. Material and stranding of conductors to conform to ASTM B3, ASTM B33, and to ASTM B8.

B. Wires and Cables for Maximum 600-Volt power: Furnish copper conductors. For No. 8 and smaller, provide THWN/THHN type cable. Provide No. 6 and larger as XHHW/2. Provide No. 12 and No. 10 AWG as solid conductor. Provide No. 8 AWG and larger as stranded conductor. Provide wires and cable conforming to UL 83.

C. Wires and Cables for Maximum 600-Volt control, indicating, metering, or alarm circuits: Furnish copper conductors, type THWN/THHN stranded, rated 75C with thermoplastic insulation and nylon jacket. Provide wires and cable conforming to UL 83. Cables used in fire alarm circuits shall be listed per the requirements of Article 760 of NEC.

D. Shielded Cable for Instrumentation Wiring: Provide 19-strand tinned copper conductors, size No. 16 AWG. Insulate conductors individually with color coded polyethylene or polyvinylchloride. Twist pairs twisted with varying lay (if more than one pair) and cover with cable tape and copper or aluminum coated mylar shielding tape and tinned copper drain wire. Jacket shall be polyvinylchloride. Cables shall be rated 600 volts and 90 degrees C.

E. Category 6 (CAT6) Cable: Category 6 cable shall consist of 4 twisted pairs of different lay and ground wires, enclosed by an overall conductive mylar backed aluminum foil shield. This shall be enclosed by an overall thermoplastic jacket. The cable shall meet the applicable requirements of ANSI/TIA/IEA-568-B.

2.03 FIBER OPTIC CABLE:

A. General:

1. Provide single-mode, buffered, optical glass fiber cores based transmission systems. Maximum attenuation losses shall be 3.4 dB/km or less at a wavelength of 850 nm and 1.0 dB/km or less at a wavelength of 1300 nm. Minimum bandwidth shall be 200 MHZ-km at 850 nm and 500 MHZ-km at 1300 nm. Fiber core size shall be 62.5 micron unless otherwise required. All plastic fiber core construction shall not be acceptable.

2. The Fiber Optic Cables provided shall be fully water blocked with a jacket to resist 3 feet deep water.

B. Fiber Optic Non-Breakout Cable:

1. Heavy duty, tight buffer construction with additional strength members, and a oil, water, and chemical resistant, UV stabilized, flame retardant, PVC outer jacket, UL listed OFNR. Fiber cladding shall be 125 micron and fiber buffer shall be 900 micron.

2. Cable specifications:

a. Fiber Count: 12

b. Suitable for indoor/outdoor, direct buried, cable tray and duct installation.

c. Minimum Crush Resistance: 80 lbs/inch [3.2 kg/cm]

d. Operating Temperature: -10 to +50 degrees C [14 to 122 degrees F]

C. Code Compliance:

1. The cable must meet the requirements of the National Electrical Code® (NEC)® Section 770.

2. Cables shall conform to the applicable performance requirements of the Insulated Cable Engineers Association, Inc. (ICEA) *Standard for Indoor-Outdoor Optical Fiber Cable* (ICEA S-104-696).

D. Packing and Shipping:

1. The completed cable shall be packaged for shipment on non-returnable wooden reels. Required cable lengths shall be stated in the purchase order.

2. Top and bottom ends of the cable shall be available for testing.

3. Both ends of the cable shall be sealed to prevent the ingress of moisture.

4. Each reel shall have a weather resistant reel tag attached identifying the reel and cable.

5. Each cable shall be accompanied by a cable data sheet.

E. Shop Tests:

1. All optical fibers in cables lengths of 1,000 m or greater shall be 100 percent attenuation tested. The attenuation shall be measured at 850 nm and 1300 nm for multimode fibers. The attenuation shall be measured at 1310 nm and 1550 nm for single-mode fibers. The manufacturer shall store these values for a minimum of five years. These values shall be available upon request.

2.04 TERMINAL CONNECTORS:

A. Manufacturers: Ortronics, Corning Cable Systems, 3M Telecom Systems Group, or approved equal.

B. Connectors: ST type (AFL Fuse Connect ST). The connector shall be field installable, requiring no epoxy or polishing. Connector specifications shall be as follows:

1. Insertion loss (typical): 0.3 dB (maximum).

2. Operating Temperature: -40 to +60 degrees C [-40 to +140 degrees F]

PART 3 - EXECUTION

3.01 GENERAL:

A. Provide all material, equipment, and labor to install the electric wire and cables as indicated and as specified.

B. Perform work in accordance with the Massachusetts Electrical Code.

C. Provide power cable identification as follows:

System Voltage	Neutral	Phase A	Phase B	Phase C
208/120V	WhiteBlack	Red	Blue	
240/120V	White-Gray Stripe	Black-Blue Stripe	Red-Blue Stripe	None
480/277V	Gray	Brown	Orange	Yellow

D. Use green to identify insulated ground conductors.

NOTE: Colored insulation, tapes or sleeves may be used to provide color coding but they must be installed on all conductors at all pull and junction boxes. Insulated ground conductors must have green insulation.

E. Provide control, indicating, metering or alarm cable identification as follows:

1. AC Control Red

2. DC Control Blue

3.02 INSTALLATION OF WIRING:

A. Install wiring in accordance with applicable provisions of Massachusetts Electrical Code, and as indicated.

B. Provide wire and cable sizes as indicated. However, in no case use smaller cable sizes than required by Massachusetts Code.

C. Unless otherwise indicated, use no conductor smaller than No. 12 AWG for power, No. 14 AWG for control, and No. 16 AWG for shielded applications.

D. Install conductors for branch lighting circuits so that voltage drop requirements of Massachusetts Electrical Code are met.

E. Install conductors continuous from outlet to outlet and make no splices except within outlet or junction boxes.

F. There shall be no splices between connection points.

G. Draw all conductors contained within a single conduit at the same time.

H. Apply wire pulling compound to conductors being drawn through conduits.

I. Use no cable bend with radius of less than eight times its diameter.

J. Support cables in riser conduits at intervals as required by Massachusetts Electrical Code.

K. Pull cables in underground conduit system without splices. Use lubricants recommended by the cable manufacturer. Do not exceed maximum pulling tension specified by the manufacturer. Use a gauge to measure pulling tension to ensure that the recommended limit is not exceeded.

L. Wrap cables in manholes on an individual cable basis with fireproof tape 2 inches wide. Extend fireproofing 1-inch into any duct. Install tape in accordance with manufacturer's instructions.

3.03 CONDUCTOR IDENTIFICATION:

A. Label each wire at both termination points. Label each wire at each end using numbering system consisting of equipment tags, terminal numbers, and circuit number where wire is coming from. Carry individual conductor or circuit identification throughout. Random numbering labels similar to what is used for "Quick Pulls" type wiring shall not be acceptable.

B. Identify each wire in junction boxes, cabinets, and terminal boxes. Where no termination is made use a plastic-coated, wire marker and where termination is made use a, plastic, pre-printed sleeve wire marker.

C. In cases where terminal boards are provided for the control, indicating, and metering wires, identify all wires including motor leads and other power wires too large for connection to terminal boards, by sleeve wire markers as specified above.

D. In manholes and handholes, identify each power wire by laminated plastic tag with "to" and "from" destinations identified. Tags shall be located to be visible. Control wires to be bundled and marked with "to" and "from" destinations identified.

3.04 CONNECTORS, TERMINAL LUGS AND BOARDS:

A. For wiring of circuits consisting of No. 10 or No. 12 AWG solid wires, such as for lighting branch circuits, utilize self-insulated pressure type connectors for all splices or joints.

B. Terminate all wires and conductors means of ring and tongue, nylon self-insulated, tin-plated copper pressure terminals.

C. Fabricated terminal boards, installed where indicated, of type 600 volts, 30 amperes, screw terminals, with white marking strips for wire identification, of the 4-, 6-, 8-, or 12-pole type.

D. Mark terminal strips with ink or indelible pencil. Mark each wire consistently throughout entire system, using notation of wires given on manufacturer's wiring diagrams.

E. Wire connections for which terminals are not supplied, for example, at solenoids or motor terminal junction boxes:

1. 10 AWG and smaller: Use self insulated pressure-type connectors.

2. 8 AWG and larger: Use insulated, mechanical type with set screw or follower bearing directly on the wire. Split bolt connectors are not acceptable.

3.05 FIELD CABLE TESTS:

A. Perform cable testing in accordance with Section 16998.

3.06 CONTRACT CLOSEOUT:

A. Provide in accordance with Section 01700.

END OF SECTION

"Page Intentionally Left Blank"

SECTION 16160

PANELBOARDS

PART 1 – GENERAL

1.01 DESCRIPTION:

A. Provide panelboards including circuit breakers, surge protection devices (SPD) and cabinets, as indicated and specified.

B. Surge Protection Devices (SPD) shall be integral to the panelboard cabinet. SPD shall be as specified in Section 16400.

1.02 RELATED WORK:

A. Division 1: General Requirements

B. Division 16: Electrical

1.03 REFERENCES:

A. National Electrical Manufacturers Association (NEMA):

1. PB1- Panelboards

2. AB1- Molded Case Circuit Breakers

B. Federal Specifications (FS):

1. W-P-115A - Panel, Power Distribution.

2. W-C-375B - Automatic Circuit Breakers.

3. QQ-S-365B - Silver Plating, Electro deposited, General Requirements for

C. Massachusetts Electrical Code

D. Underwriter's Laboratories, Inc.:

1. U.L. 67 – Panelboards

2. U.L. 489 – Molded Case Circuit Breakers

1.04 SUBMITTALS:

A. Submit the following in accordance with Section 01300.

1. Submit shop drawings and manufacturer's product data in accordance with requirements of Section 16050.

2. Submit time current characteristic curves, short circuit rating and data for each circuit breaker type and rating.

3. A copy of this specification section with addenda and all referenced specification sections with addenda, with each paragraph check marked to indicate specification compliance.

a. Failure to include copy of the marked-up specification section will result in return of the entire submittal without further review and consideration until the mark-up specification are re-submitted with the entire package.

1.05 SEISMIC REQUIREMENTS:

A. Conform to the requirements indicated on the structural drawing and as defined in Section 01900.

1.06 QUALITY ASSURANCE:

A. Review the manufacturer’s recommended installation with the manufacturer prior to installation.

PART 2 - PRODUCTS

2.01 ACCEPTABLE PANELBOARD MANUFACTURERS:

A. Eaton Corporation

B. Siemens

C. Schneider Electric

D. Or equal.

2.02 PANELBOARDS:

A. Provide factory assembled dead front type panelboards.

B. Provide panelboards with branch circuit breakers and a main circuit breaker or main lugs only as indicated.

C. Furnish panelboards with full capacity separate ground bus, separate insulated neutral bus and furnish panelboards connected to a 3-phase, 4-wire service or single phase, 3-wire service as indicated. All buses to be tinned copper.

D. Provide panelboards with the voltage, frequency and current ratings as indicated conforming to NEMA Standard PB1, Federal Specification W-P-115A. U.L. 67, and the N.E.C.

E. Furnish the panelboard main and 100% neutral buses, with 98 percent conductivity rectangular copper bars provided with bolted type lugs.

F. Drill buses to fit either "A", "B" or "C" Phase connectors, and make sure that connectors are inter-changeable and installed in a distributed phase sequence.

G. Silver plate copper buses connections and terminals, to a thickness of 0.005-in., conforming to the requirements of Federal Spec. QQ-S-365B.

H. Prevent terminal lugs from turning per NEMA standard PBI and verify they can be used for the conductor material and size.

I. Provide main bus-bracing for each panel board for 10,000 amperes symmetrical short circuit at 240 volts or less and 65,000 amperes symmetrical short circuit at 480 volts unless otherwise indicated.

J. Provide typed panelboard directory cards with the following information:

1. Panelboard name designation.

2. Panelboard voltage rating.

3. Panelboard ampere rating.

4. Panelboard short circuit rating.

5. Panelboard pole/circuit numbers and branch circuit description as wired in the field.

6. Indicate 2 pole and 3 pole branch circuit breakers.

7. Label spare circuit breakers “spare.”

2.03 CIRCUIT BREAKERS:

A. Furnish bolt-on type branch and main circuit breakers. Furnish frame sizes, trip settings and number of poles as indicated. Clearly and visibly mark circuit breakers with ampere trip rating. Furnish breakers meeting the requirements of F.S. W-C-375B and NEMA AB1. Provide circuit breakers marked with ampere trip rating that can be read at a distance of two feet from the panel. Provide breakers meeting the requirements of Fed. Spec. W-C-375B and NEMA AB1.

B. Furnish all breakers with quick-make, quick-break, toggle mechanisms and thermal-magnetic, inverse time-limit overload and instantaneous short circuit protection on all poles, unless otherwise indicated. Automatic tripping indicated by the breaker handle assuming a clearly distinctive position from the manual ON and OFF position. Furnish breaker handle that is trip-free on overloads.

C. Do not use single pole breakers with handle ties or bails in lieu of multipole breakers.

D. Furnish handle lock device on breakers to prevent the manual opening of the selected breakers.

E. Furnish padlocking device on all breakers to prevent the opening of circuit breakers.

F. Voltage and interrupting rating of all breakers in a panelboard shall not be less than voltage and short circuit rating of the panelboard main buses, as indicated. Series rated circuit breakers shall not be used. Furnish breakers to operate satisfactorily at the frequency indicated.

G. Furnish ground fault interrupter circuit breakers for circuits as indicated. The circuit breaker shall be UL listed, Class A, Group I device (5 milliamp sensitivity, 25 millisecond trip time or 30 ma for heat trace circuits).

H. Furnish single pole breakers with full module size. Do not install two pole breakers in a single module.

I. Furnish time-current characteristic curves and catalog information and data for each size of breaker furnished.

J. Provide transient surge protective devices in accordance with Section 16400, as specified herein and as indicated.

2.04 CABINETS:

A. Provide cabinets without knockouts. Drill cabinets only for the exact conduit entrances and mounting bolts. NEMA rating of panels to match areas as denoted on the drawings.

B. Finish cabinet fronts, trims, and surface-mounted boxes in ANSI No. 61 or 49, light-gray enamel over a rust-inhibitive primer. Front covers shall be hinged to cabinets and shall be double door (door in door) construction. Provide cabinets for surface or flush mounting as indicated.

C. Unless otherwise specified, construct panelboard cabinets of code-gauge galvanized, sheet steel and equip with gutters for the risers and outgoing circuits.

D. Provide all panelboard locks keyed alike.

E. Provide cabinets drilled only for the exact conduit entrances and mounting bolts.

PART 3 - EXECUTION

3.01 INSTALLATION:

A. Mount panelboards such that the height of the top operating handle does not exceed 6 ft. 6-in. from the floor.

B. Hang each door of the cabinet on semi- or fully concealed hinges with a combination catch and lock.

C. On cabinets 48 in. high and over, install a 3 point catch assembly latching at top, bottom and middle.

3.02 CHECKOUT AND TESTING:

A. Provide checkout, field, and functional testing in accordance with Section 16050, and 16998.

3.03 CONTRACT CLOSEOUT:

A. Provide in accordance with Section 01700.

END OF SECTION

SECTION 16220

ELECTRIC MOTORS

PART 1 - GENERAL

1.01 DESCRIPTION:

A. Low voltage electric motors and accessories, furnished under other Sections, and which are a part of equipment assemblies shall be in conformance with the requirements specified in this Section, unless otherwise noted.

B. Unless otherwise specified, all electric motors furnished and installed by the Contractor shall conform to the requirements specified herein.

1. Motors rated at 460 V which are powered from Variable Frequency Drives shall be inverter duty rated as per NEMA-MG-1.

2. Motors shall be NEMA Premium Efficient as per NEMA-MG-1.

1.02 RELATED WORK:

A. Division 1: General Requirements

B. Division 11: Equipment

C. Division 15: Mechanical

D. Division 16: Electrical

1.03 REFERENCES:

A. National Electrical Code (NEC)

B. Massachusetts Electrical Code

C. Underwriters Laboratories, Inc. (UL)

D. National Electrical Manufacturers Assoc. (NEMA)

1. NEMA Standard MG-1 – Motors and Generators

2. NEMA WP-1 – Enclosed Electric Motor

E. American Bearing Manufacturers Association (ABMA)

F. American National Standard Institute (ANSI)

G. Institute of Electrical and Electronics Engineers (IEEE)

1. IEEE Standard 112 – Test Procedures for Polyphase Induction Motor and Generators

2. IEEE Standard 85 – Airborne Sound Measurements on Rotating Electric Machinery, Test Procedure for

3. IEEE Standard 429 – Evaluation of Sealed Insulation Systems for AC Electric Machinery Employing Form – Wound Stator Coils

4. IEEE Standard 841 – Service Duty Totally Enclosed Fan Cooled (TEFC) Squirrel Cage Induction Motors

1.04 SUBMITTALS:

A. Submit the following in accordance with Section 01300:

1. Descriptive literature and motor characteristics, including thermal limit curves and speed vs. torque curves. Provide thermal limit curves for motors 75 Hp and greater and all motor data.

2. A copy of this specification section with addenda and all referenced specification sections with addenda, with each paragraph check-marked to indicate specification compliance.

a. Failure to include a copy of the marked-up specification sections will result in return of the entire submittal without further review and consideration until the marked-up specification are re-submitted with the entire package.

3. Submit motor data with the associated driven equipment submittals.

4. Shop drawings and descriptive data to include:

a. Complete list of all motors to be furnished.

b. Outlines, dimensions, weights, and wiring diagrams.

c. Location of main and accessories boxes with size of conduit entrance.

d. Efficiency and power factor at 1/2, 3/4 and full load.

e. Bearing life data and grease requirements.

f. Nameplate data.

g. Prototype test data.

h. Ground pad locations.

i. Strip heaters KW and voltage ratings.

j. Full load current

k. Locked rotor current

l. Full load torque in lb.-ft.

m. Starting and breakdown torque in percent of full-load torque

n. Number and frequency of permissible starts under specified conditions

o. Horsepower versus current curves

p. Moment of inertia of rotor

q. The zero load, rated speed (with no load connected) kW and kvar input

r. The locked rotor KVA and power factor at rated voltage

s. Service factor

t. Descriptive bulletins or catalog cuts with full description of the insulation system

u. Manufacturer, type, size and rating of bearings

v. Motor thermal limit or damage curves

5. Submit certified copies of all factory shop test results.

6. Submit list of recommended spare parts and maintenance tools for each type of motor.

7. Provide manufacturer's printed installation instructions including anchoring details to meet earthquake requirements as specified and indicated on the structural drawings.

8. Performance Test Reports: Upon completion of installed system, submit in booklet form all field tests performed.

1.05 QUALITY ASSURANCE:

A. Motors shall comply with the latest reference standards specified.

B. Routine tests shall be performed on representative motors less than 100 Hp in size and shall include the information described on NEMA MG1-12.54 Report of Test Form for Routine Tests on Induction Motors. Efficiency shall be determined in accordance with IEEE Publication No. 112, Method B. Power factor shall be measured on representative motors.

PART 2 - PRODUCTS

2.01 ACCEPTABLE MOTOR MANUFACTURERS:

A. Reliance Electric

B. Toshiba

C. U.S. Electric Motors

D. Or equal.

2.02 ELECTRIC MOTOR RATINGS:

A. Voltage Ratings:

1. Unless otherwise specified, motors with ratings of 1/2 to 500 Hp shall be rated 460-volt (nameplate rating), three-phase, 60-Hertz; motors of 1/3 Hp or less to be rated 115-volt, single-phase, 60 Hertz.

B. The following specific motor requirements shall be identified in each equipment specification:

1. RPM.

2. Motor enclosure type.

2.03 MOTOR REQUIREMENTS:

A. Motor heaters shall be supplied on all motors located outdoors. Heaters shall be of the cartridge or flexible wrap around type installed within the motor enclosure adjacent to core iron. Heaters shall be rated for 120 volt, single phase with wattage. The heater wattage and voltage shall be embossed on the motor nameplate.

B. Every motor shall be of capacity to operate the driven equipment under all load and operating conditions without exceeding its rated nameplate current or power or its specified temperature limit at rated voltage. Each motor shall develop the necessary torque for its required service throughout its acceleration range at a voltage 10 percent below nameplate rating. Where indicated on the electrical drawings to be operated on a reduced voltage starter, the motor shall develop the necessary torque under the conditions imposed by the reduced voltage starting method.

C. The motor shall have capacity to operate the driven equipment as given in the equipment detail specifications. The motor shall not be required to deliver more than its rated nameplate horsepower, at unity (1.0) service factor, under any condition of mechanical or hydraulic loading.

D. Type of Motors:

1. All motors shall be NEMA Design B or of a type having starting characteristics and ruggedness as may be necessary under the actual conditions of operation and, unless otherwise specified, shall be for full-voltage starting.

E. Insulation:

1. All motors shall have Class B (fractional horse power only) and Class F insulation for all other size motors.

2. Insulation systems shall be manufacturer’s premium grade, resistant to attack by moisture, acids, alkalies and mechanical or thermal shock for 480 Volt motors. Provide a Class F insulation system for an ambient temperature motor operation of 0 to 40 degrees C at no more than 3300 feet above sea level for inverter duty motors. This temperature rise shall be met when motors are operated and controlled with the VFD(s). The motor insulation system shall have full capability to handle the common mode voltage conditions imposed by the VFD.

3. Motors shall have vacuum/pressure impregnated epoxy insulation for moisture resistance.

4. Insulation for inverter duty motor windings shall meet or exceed the Pulse Endurance Index for magnetic wire and shall not be injured when exposed to repeated pulse type waveforms, repetitive high voltage transients, switching frequency and rate of rise of the pulse.

F. Enclosures:

1. Motors shall have a steel or cast iron frame and a cast iron or stamped steel conduit box, as specified below. Conduit box shall be split from top to bottom and shall be capable of being rotated to four positions. Synthetic rubber-like gaskets shall be provided between the frame and the conduit box and between the conduit box and its cover. Motor leads shall be sealed with a non-wicking, non-hygroscopic insulating material. A frame mounted pad with drilled and tapped hole, not less than 1/4-in. diameter, shall be provided inside the conduit box for motor frame grounding.

   a. Totally enclosed fan cooled: TEFC motors shall have a steel or cast iron frame, cast iron end brackets, cast iron conduit box, 1.15 service factor at 40 degrees C, tapped drain holes (corrosion resistant plugs for frames 286T and smaller and automatic breather/drain devices for frames 324T and larger) and upgraded insulation by additional dips and bakes to increase moisture resistance.

   b. Totally enclosed non-ventilated: TENV motors shall include the same rating and accessories as specified for TEFC motors.

   c. Motors in NEMA 4, NEMA 4X and classified areas shall be provided with severe duty rating. Motors shall be of the corrosion resistant type conforming to motors designated by the manufacturer as “Corro-Duty”, “Mill and Chemical”, “Custom Severe Duty”, or similar quality designation. Severe duty motors shall have a cast iron frame, cast iron end brackets, cast iron conduit box and 1.15 service factor at 40 degrees C and tapped drain holes (corrosion resistant plug for frames 286T and smaller and automatic breather/drain devices for frames 324T and larger).

G. Special Purpose Motors:

1. Hermetically sealed air conditioning units, hoists, cranes and other devices complying with special safety codes shall be furnished with motors, control equipment, accessories and safety devices, in accordance with the manufacturer's standards and to be rated for the duty cycle as specified for the driven equipment. Service factor 1.15 above 3 hp.

2. Submersible motors shall be equipped with three thermal switches (one in each phase winding) connected to stop motor operation if the temperature exceeds 125 deg. C (255 deg. F). Also, a leakage sensor for sensing water intrusion into the stator housing shall be provided.

3. Inverter duty rated: Motors for operation on variable frequency drives shall meet current power quality levels published in NEMA MG1, Part 31. Enclosures shall be equal to those furnished for severe duty or explosion proof motors. Motor shaft and bearings shall be insulated. Motors nameplate service factor shall be 1.0. Internal service factor shall be 1.15 that of the nameplate. Stator laminations shall be stagger-stacked and stamped from high grade electrical steel to minimize eddy-current losses and heat build-up caused by inverter induced harmonics. Rotors shall be configured to minimize skin-effect heating. Provide each variable frequency drive motor with an internal normally closed motor thermostat per phase wired in series

H. Auxiliary Devices:

1. Single-phase motors requiring switching devices and auxiliary starting resistors, capacitors, or reactors shall be furnished as combination units with such auxiliaries either incorporated within the motor housings or housed in enclosures mounted upon the motor frames. Each combination unit shall be mounted upon a single base and to be provided with a single conduit box.

I. General Design of Motors:

1. Motors shall comply with the latest NEMA Standards Publication No. MG1 for Motors and Generators, unless otherwise specified.

2. All polyphase non-explosion proof motors shall be provided with energy efficient operation and meet the requirements of MG1-12.53 a and b.

3. Motor windings shall be braced to withstand successfully the stresses resulting from the method of starting. The windings shall be treated thoroughly with an insulating compound that protects against moisture and slightly acid or alkaline conditions.

4. Bearings shall be of the self-lubricating type, provided so that there is proper alignment of rotor and shaft and to prevent leakage of lubricant.

    a. Bearings for open motors shall be of the sleeve or ball type, as specified under the respective items of mechanical equipment.

    b. Bearings for totally enclosed and explosion proof motors shall be of the ball type.

    c. Bearing L-10 fatigue life in hours at 100 percent load shall be 50,000.

    d. Bearing grease shall be of the 120 deg. C thermal capability type.

5. Vertical motors shall be provided with thrust bearings for all thrusts to which they can be subjected in operation.

6. All three phase two speed motors shall be of the two-winding design.

7. All non VFD driven three phase motors shall be provided with a 1.15 service factor.

8. Provide VFD driven motor shafts with grounding rings.

9. Three phase motors shall be of cast iron construction including frame and end brackets.

10. Motor nameplates shall be Type 316 stainless steel.

11. Motor Terminal Boxes and Leads:

    a. Motors shall be furnished with oversize conduit terminal boxes to provide for making and housing the connections, and with flexible leads of sufficient length to extend for a distance of not less than 4 in. beyond the face of the box. Solderless lugs shall be furnished. Totally enclosed and explosion proof motors to have cast-iron terminal boxes.

    b. Leads for space heaters shall be brought out into an auxiliary, cast, conduit box on the motor side opposite to the main terminal box. Auxiliary box to have 1" threaded conduit openings and shall be so constructed that conduit entrance may be placed at top, bottom, or either side.

c. A grounding terminal shall be provided in the main terminal box and a bronze grounding bolt to be furnished at the conduit side of the motor frame.

d. For inverter rated motors, provide oversized terminal boxes with oversize conduit opening and oversized cable lugs for cables as indicated.

J. Motor Efficiencies:

1. Three phase motors rated 1 Hp and larger shall be of the premium efficiency, "Design E", type per Table 12.1 of NEMA MG1 Part 12. Efficiency values shall be based on tests performed in accordance with IEEE Publication No. 112, Method B. Motors with horsepower or rpms not listed shall conform to comparable standards of construction and materials as those for listed motors.

K. Shop Painting:

1. Unless otherwise specified, motors shall be given a shop application of paint filler or enamel sealer, a flat coat of undercoater for enamel, and two coats of enamel or, in lieu of this treatment, other corrosion-resistant treatment customary with the manufacturer.

L. Motor Data:

1. The Contractor shall furnish five certified copies of characteristic curves of each motor furnished, except 115-volt motors. Curves shall be supplied as a part of the driven equipment submittal.

M. Motor Shop Tests:

1. Motor shop tests shall be made in accordance with the IEEE Test Codes as specified in the NEMA MG1 Standards for Motors and Generators. NEMA report-of-test forms to be used in submitting test data.

2. Motor efficiency shall be determined by use of IEEE Standard 112 Test Method B, and by use of MGI-12.53 a and b.

3. For induction motors 5 hp, up to 100 hp, copies of routine test reports of electrically duplicate motors shall be furnished.

4. For motors 3 hp or less, no test data need be furnished.

5. Where required by the load equipment specifications, provide testing support for shop testing at the equipment manufacturer's facility.

PART 3 - EXECUTION

3.01 INSTALLATION:

A. Verify heaters are energized when supplied on motors.

B. After motor installation but before connection to power wiring, test motor winding insulation.

C. After connection to power wiring, check for operating temperature, correct rotation, vibration, alignment and operating current drawn under load.

D. Submit all motor test results for review and record.

3.02 TESTING:

A. Inspect physical and mechanical condition.

B. Inspect for correct anchorage, mounting, grounding, connection, and lubrication.

C. Verify tightness of accessible bolted electrical connections by calibrated torque-wrench method in accordance with manufacturers published data.

D. Verify the absence of unusual mechanical or electrical noise or signs of overheating during initial test run.

E. Megger test motor winding insulation.

F. Provide testing in accordance with Section 16998.

3.03 CONTRACT CLOSEOUT:

A. Provide in accordance with Section 01700.

END OF SECTION

SECTION 16320

GENERAL PURPOSE DRY-TYPE TRANSFORMERS

PART 1 - GENERAL

1.01 DESCRIPTION:

A. Provide copper-wound, dry-type transformers as indicated and specified.

B. Provide transformer windings and enclosures rated for the installation location and in accordance with the requirements herein.

1.02 RELATED WORK:

A. Division 1: General Requirements

B. Division 16: Electrical

1.03 REFERENCES:

A. Underwriters' Laboratories, Inc. (UL):

1. UL 506 - Transformers, Specialty.

B. National Electrical Manufacturers Association (NEMA):

1. ST 20 - Dry-Type Transformers for General Applications (ANSI C89.2).

2. TP-1 – Guide for Determining Energy Efficiency for Distribution Transformers.

C. American Society for Testing and Materials (ASTM):

1. D 635 - Rate of Burning and/or Extent and Time of Burning of Self-Supporting Plastics in a Horizontal Position.

D. Massachusetts Electrical Code.

1.04 SEISMIC REQUIREMENTS:

A. Conform to the requirements as indicated on the structural drawings and as specified in Section 01900.

1.05 SUBMITTALS:

A. Submit the following in accordance with Section 01300.

1. Submit shop drawings and manufacturer's product data of the transformer, enclosure, core and coil, insulation system and all specified accessories.

2. A copy of this specification section with addenda and all referenced specification sections with addenda, with each paragraph check-marked to indicate specification compliance.

a. Failure to include a copy of the mark-up specification sections will result in rejection of the entire submittal with no further review and construction.

3. Provide manufacturer’s printed installation instructions including anchoring details to meet earthquake requirements as specified and indicated.

1.06 REQUIREMENTS OF REGULATORY AGENCIES:

A. Furnish transformers in accordance with NEMA ST 20 and UL 506.

B. Furnish transformers with UL listing mark.

PART 2 - PRODUCTS

2.01 ACCEPTABLE MANUFACTURERS:

A. Eaton Corporation

B. Siemens

C. Schneider Electric

D. Or equal.

2.02 TRANSFORMERS:

A. Provide copper-wound, dry type transformers.

B. In NEMA 1 and NEMA 12 designated areas, furnish general purpose, ventilated, dry-type transformers in indoor-style enclosure. On single-phase transformers and three-phase transformers above 9 KVA, provide two windings per phase.

C. Auto transformers shall not be used in place of general purpose dry-type transformers.

D. Furnish two 2-1/2 percent full capacity taps above and below nominal in high voltage winding for transformers rated above 15 kVA. Provide two five percent taps below rated voltage for transformers rated 15 kVA and below.

E. Furnish transformers, single-phase or three-phase, as indicated. Furnish transformers with kVA ratings as indicated.

F. Furnish three-phase transformers, Delta-Wye, Delta-Delta or Wye-Wye connected as indicated and conforming with latest NEMA standards. Scott Tee connected transformers above 9 kVA shall not be used.

G. Furnish transformers with primary and secondary voltages and frequency, wye connected, as indicated for secondary windings, with neutral brought out for cable termination.

H. Furnish transformers that have continuous operation at rated kVA with normal life expectancy as defined in NEMA ST 20.

I. For transformers rated 30 kVA or less, furnish 180 deg. C insulation. Performance shall be obtained without exceeding 115 deg. C average temperature rise by resistance or 145 deg. C hot spot temperature rise in 40 deg. C maximum ambient and 30 deg. C average ambient. Maximum coil hot spot temperature shall not exceed 185 deg. C.

J. Transformers rated greater than 30 kVA shall be provided with 220 deg. C insulation materials with proven reliability and low-loss 80 deg. C full load operating temperature rise rating.

K. Furnish transformers made of flame retardant materials that will not support combustion as defined in ASTM D 635.

L. Furnish core mounting frames and enclosures of welded and bolted construction with mechanical rigidity and strength to withstand shipping, erection, and short circuit stresses.

M. Transformers located in sprinkled areas shall be provided with NEMA 2 rated enclosure to protect transformer from water falling at an angle of 75 degrees from the vertical.

N. Furnish transformers that meet UL thermal overload test of 200 percent of rated current for one half hour.

O. Furnish transformers not to exceed the 65 deg. C rise established by UL as safe limit for maximum surface enclosure temperature.

P. Furnish transformers with sound level not exceeding:

Trans. kVA	Average Sound Level in dB NEMA ST 20
0-09	40
10-50	45
51-150	50

Q. Install transformers with sound levels greater than 50 dB on resilient vibration isolating mounts to prevent amplification of sound. Transformers rated 15 kVA and larger to be provided with rubber washer anti-vibration pads and molded neoprene assemblies to isolate noise from the transformer to the mounting surface.

R. Provide a grounded copper electrostatic shield between the primary and secondary windings. The design of the shield shall be to shunt noise and transients to the ground path.

S. Furnish transformers sized and configured for 100 percent neutrals for the secondary full load current.

T. Furnish transformers with copper windings.

U. Furnish transformers that meet efficiency guidelines of NEMA Standard TP-1.

2.03 SHOP TESTING:

A. Furnish results of audible-sound-levels tests in accordance with NEMA ST 20 of similar size transformer.

PART 3 - EXECUTION

3.01 INSTALLATION:

A. Install and guard transformers as specified by latest Massachusetts and ANSI standards, and in accordance with manufacturer's printed instructions.

B. Install transformers so that there is space around transformer to dispose of transformer full load losses by ventilation without ambient temperature reaching 40 deg. C. maximum as specified in Paragraph 2.02.

C. Unless otherwise indicated, wall mount with supports, transformers rated 15 kVA and below. Floor mount transformers rated above 15 kVA.

D. Provide lifting lugs and jacking plates on transformer enclosure.

E. Provide concrete pad for all floor mounted transformers.

3.02 CHECKOUT AND TESTING:

A. Provide in accordance with Sections 16050 and 16998.

3.03 CONTRACT CLOSEOUT:

A. Provide in accordance with Section 01700.

END OF SECTION

SECTION 16359

ELECTRICAL SYSTEM STUDIES

PART 1 - GENERAL

1.00 DESCRIPTION:

A. Provide electrical system studies as indicated and in compliance with Contract Documents.

1. Provide a short circuit, protective device coordination and arc-flash study for the electrical distribution system constructed under this contract as shown on the electrical single line drawings. The study shall consider the electrical utility system upstream protective devices down to the 208Y/120V transformer secondary. The study shall include data to verify the short circuit ratings of the electrical distribution equipment to be provided under this contract and to identify the required settings of associated protective devices.

a. Provide a report summarizing the study including: one-line of system, circuit breaker, and fuse protective device coordination and short circuit analysis, all prepared by an independent specialty firm. Device calibration and settings are to be based on the results of this coordination study.

B. The firm performing the Work of this Section shall not be part of or affiliated with the electrical equipment supplier organization(s) or manufacturer(s) or the Electrical Contractor.

C. Contact the electrical utility to obtaining the available fault current and utility protection equipment data.

D. Changes and additions of equipment characteristics, based on the actual equipment supplied may be suggested by the results of the short circuit and protective device coordination studies. Submit suggested changes and additions as a part of the study. Field settings of devices, adjustments, and minor modifications to equipment that are required to accomplish conformance with the accepted short circuit and protective device coordination studies shall be provided at no additional cost.

E. The studies shall be performed for two operating conditions:

1. The system is powered by the electrical utility.

2. The system is powered by the on-site generator.

1.01 REFERENCES:

A. Institute of Electrical and Electronics Engineers (IEEE):

1. C37.010: Application Guide for AC High-Voltage Circuit Breakers Rated on a Symmetrical Current Basis

2. 242: IEEE Recommended Practice for Protection and Coordination of Industrial and Commercial Power Systems.

3. 519: IEEE Recommended Practices and Requirements for Harmonic Control in Electrical Power System.

4. 1584: IEEE Guide for Performing Arc-Flash Hazard Calculations

B. National Fire Protection Association (NFPA):

1. 70E: Standard for Electrical Safety Requirements for Employee Workplaces.

C. Massachusetts Electrical Code.

1.02 SUBMITTALS:

A. Submit the following in accordance with Section 01300.

1. A copy of this specification section with addenda and all referenced specification sections with addenda, with each paragraph check-marked to indicate specification compliance.

a. Failure to include a copy of the marked-up specification sections will result in return of the entire submittal without further review until marked-up specification are resubmitted with the entire package

2. Short circuit and protective device coordination study concurrent with the preliminary shop drawing submission for the main electrical distribution system equipment and overcurrent protective devices. Submit an initial study and a final study, with all electronic files, at the completion of the project.

a. The study shall be performed using the latest edition of one of the following commercial software program.

(1) EasyPower

(2) SKM System Analysis

b. The study shall consider the effects of motor contribution during fault conditions, at various buses in the system.

c. The study shall include cable sizes, cable lengths and raceway types for considering the effects of cables impedance in the system based on information to be provided by the Contractor.

d. The maximum fault contribution at the incoming source(s) shall be documented via correspondence from the authority responsible for this source(s).

e. Transformer inrush points and damage curves shall be plotted on coordination curves.

f. Obtain from the engine generator supplier, reactance values, protective device type and data and generator decrement curves.

g. Plot on common drawings, single line diagrams and the curves for each protective device to verify proper selectivity and protection for all components of the system for both the normal utility and standby generator source. Label each device uniquely.

h. Identify recommended settings for all devices.

i. Devices which do not provide full selectivity and coordination are not to be used as a recommended device in the study.

j. Submittals of electrical distribution equipment affected by the study are not to be submitted until successful completion of the specified electrical study.

3. After completion of the coordination study, the Contractor shall set all devices based on the study.

4. Qualifications of specialty testing and/or study firm, as specified.

5. Provide electronic files of the performed studies electrical model including all input data base information.

1.03 QUALIFICATIONS OF SPECIALTY FIRM:

A. Submit evidence of the following:

1. Firm's experience:

a. Specialty firm shall have been in the business of the type of work specified, for at least the past five years.

b. The firm shall have a minimum of five projects of equal or greater size, service, and the type of equipment specified.

c. At least the following information must be submitted:

(1) The number of years the firm has been in the business of performing coordination studies.

(2) Summary of five previously performed studies including:

(a) A brief description of each study.

(b) Name of owner of installation on which study was performed with address, telephone number, and contact person.

(c) Date of study.

(3) List of projects and contact persons for which protective device settings were performed.

(4) Any other information indicating the firm's experience, ability to perform the work, and business status.

B. Firm shall have a licensed Professional Electrical Engineer, licensed in Massachusetts, supervise all work and seal all reports.

PART 2 - PRODUCTS – (NOT USED)

PART 3 - EXECUTION

3.01 SHORT CIRCUIT STUDY:

A. Perform a short circuit study in accordance with ANSI Standard C37.010 to verify the adequacy and correct application of circuit protective devices and other electrical system components.

B. The study shall address the case when the system is being powered from the utility source as well as from the on-site generating facilities. Minimum and maximum possible fault conditions shall be covered in the study.

C. Include the fault contribution of all non VFD driven motors. Calculate short-circuit momentary duties and interrupting duties on the basis of an assumed bolted 3-phase short circuit at each bus. The short circuit tabulations shall include X/R ratios, asymmetry factors, kVA and symmetrical fault-current. Where ground fault protection is specified, provide a ground fault current study for the same system areas, including the associated zero sequence impedance diagram. Include in tabulation form, fault impedance, X/R ratios, asymmetry factors, motor contribution, short circuit kVA, and symmetrical and asymmetrical fault currents.

D. The studies shall include representation of the site power system, the base quantities selected, impedance source data, calculation methods and tabulations, one-line diagrams, conclusions and recommendations.

3.02 PROTECTIVE DEVICE COORDINATION STUDY:

A. Provide a protective device time current coordination study with coordination plots of current limiting devices, plus tabulated data, including ratings and settings selected. In the study, balance shall be achieved between the competing objectives of protection and continuity of service (with emphasis on continuity of service) for the system specified, taking into account the basic factors of sensitivity, selectivity and speed.

B. Provide separate plots for utility and generator operation as applicable. Show maximum and minimum fault values in each case. Multiple power sources shown in one plot is not acceptable.

C. Each primary protective device required for a delta-to-wye-connected transformer shall be selected so the characteristic or operating band is within the transformer parameters, which, where feasible, shall include a parameter equivalent to 58 percent of the ANSI withstand point to afford protection for secondary line-to-ground faults. Separate low voltage circuit breakers from each other and the associated primary protective device, by a 16 percent current margin for coordination and protection in the event of line-to-line faults. Separate protective relays by a 0.4 second time margin when the maximum 3 phase fault flows to assure proper selectivity. The protective device characteristics or operating bands shall be terminated to reflect the actual symmetrical and asymmetrical fault-currents sensed by the device. Provide the coordination plots for 3 phase and phase-to-ground faults on a system basis. Include all devices down to largest branch circuit feeder circuit breaker. Include all adjustable setting ground fault protective devices.

D. Identify discrepancies in the conclusions and recommendations of the report. Upon resolution of discrepancies and recommendation, update all associated analyses and revise the affected studies.

E. The coordination plots shall graphically indicate the coordination proposed for the several systems centered on full scale log forms. The coordination plots shall include complete titles, representative one-line diagrams and legends, associated upstream power system relays, fuse or system characteristics, significant motor starting characteristics, significant generator characteristics, complete parameters for power, and substation transformers, complete operating bands for low voltage circuit breaker trip devices, fuses, and the associated system load protective devices. The coordination plots shall define the types of protective devices selected, together with the proposed coil taps, time-dial settings and pick-up settings required. The short-time region shall indicate the relay instantaneous elements, the magnetizing inrush, and ANSI transformer damage curves, the low voltage circuit breaker and instantaneous trip devices, fuse

manufacturing tolerance bands, and significant symmetrical and asymmetrical fault-currents.

F. The thermal limit of all feeder cables to each bus and large motors, where applicable in the study, shall be shown.

G. No more than six devices shall be shown on one coordination plot. Of these six curves, two (the largest upstream device and the smallest downstream device) shall repeat curves shown on other coordination plots in order to provide cross reference. Give each unique protective device curve in the study a study-unique number or letter identifier to permit cross reference between plots. Do not use identifier letters or numbers more than once.

H. Each primary protective device required for delta-wye connected transformer shall be selected so that the characteristic or operating band is within the transformer parameters, which, where feasible, shall include a parameter equivalent to 58 percent of the ANSI withstand point to assure protection for secondary line-to-ground faults.

I. Include a detailed description of each protective device identifying its type, function, manufacturer, and time-current characteristics. Tabulate recommended device tap, time dial, pickup, instantaneous, and time delay settings. Include C.T. ratio, burden and all other calculations required for the determination of settings.

3.03 ARC FLASH HAZARD ANALYSIS:

A. Perform arc flash hazard analysis for the following items:

1. Distribution Panels

2. Panelboards

3. Control panels with voltage over 50 Volts

4. Transformers that have auxiliary electrical devices operating at over 50 Volts

5. Disconnect Switches

6. Stand-alone motor starters

B. Methods of performing analysis:

1. Use IEEE 1584 calculations.

a. If the conditions fall within the IEEE 1584 parameters use the IEEE 1584 calculations based on actual OCPD curves and settings.

b. If the conditions do not fall within the 1584 parameters, use the Lee method.

C. Provide color coded arc flash labels for each equipment item for which the calculations were performed with the following information:

1. Limited approach boundary

2. Information required by NFPA 70E.

3. Restricted approach boundary

4. Personal protective equipment required within restricted approach boundary

5. Flash protection boundary

6. Personal protective equipment required within flash protection boundary

7. Prohibited approach boundary

3.04 FIELD TESTING:

A. Integrate results of this study with functional testing of the contract electrical equipment in accordance with Section 16050 and Section 16998.

3.05 CONTRACT CLOSEOUT:

A. Provide in accordance with Section 01700.

END OF SECTION

SECTION 16400

SURGE PROTECTION DEVICES (SPDs)

PART 1 - GENERAL

1.01 DESCRIPTION:

A. Provide Surge Protection Devices (SPD) integral to the electrical distribution system equipment as indicated. The distribution 480V and 208V panelboards.

B. The components shall provide protection for electrical and electronic devices against the damaging effects of surges, transients, and electrical line noise.

1.02 RELATED WORK:

A. Division 1: General Requirements

B. Division 16: Electrical

1.03 REFERENCES:

A. Underwriters Laboratory (UL):

B. Massachusetts Electric Code.

C. American National Standard Institute (ANSI)/Institute of Electrical and Electronic Engineers (IEEE):

1. ANSI/IEEE C62.41 - IEEE Guide for Surge Voltages in Low-Voltage AC Power Circuits

2. ANSI/IEEE C62.45 - IEEE Guide for Surge Suppressor Testing

3. National Electrical Manufacturers Association (NEMA):

4. NEMA 250 - Enclosures for Electrical Equipment (1000 volts maximum)

5. NEMA LS 1 - Low Voltage Surge Protection Devices

D. Military Standard: 220A - Radio Frequency Interference and Electromagnetic Interference.

1.04 SUBMITTALS:

A. Submit the following in accordance with Section 01300:

1. A copy of this specification section with addenda and all referenced specification sections with addenda, with each paragraph check-marked to indicate specification compliance.

a. Failure to include a copy of the marked-up specification sections will result in rejection of the entire submittal with no further review and construction.

2. Shop drawings, manufacturer's product data, and component ratings in accordance with this section and the requirements of Section 16050.

3. Provide verification that the SPD complies with the required ANSI/UL 1449 listing by UL.

4. Submit SPD type, model number, system voltage, phases, modes of protection, voltage protection rating (VPR) and nominal discharge current (In).

5. Provide outline drawings and internal wiring diagrams.

6. Submit factory test data.

7. Operating and Maintenance Instruction Manuals:

a. Furnish:

(1) Operating instruction manuals outlining step-by-step procedures for system startup and operation and in accordance with Section 01300.

(2) Manufacturer’s name, model number, service manual parts list.

(3) Brief description of equipment and basic operating features.

(4) Maintenance instruction manuals outlining maintenance procedures.

(5) Troubleshooting guide listing possible breakdown and repairs.

(6) Simplified connection wiring diagrams for each circuit.

1.05 QUALITY ASSURANCE:

A. SPD units and all components shall be designed manufactured and tested in accordance with the latest applicable UL Standard (ANSI/UL 1449 3rd Edition).

B. SPD units shall be UL approved for use with Lightning Protection Systems.

PART 2 - PRODUCTS

2.01 ACCEPTABLE MANUFACTURERS:

A. Transient voltage surge suppression components.

1. Eaton-Cutler Hammer

2. Schneider Electric

3. Siemens

4. Or equal.

2.02 GENERAL:

A. Electrical Requirements:

1. Unit Operating Voltage – Refer to drawings for operating voltage and unit configuration.

2. Maximum Continuous Operating Voltage (MCOV) – The MCOV shall not be less than 125% of the nominal system operating voltage.

3. The suppression system shall incorporate thermally protected metal-oxide varistors (MOVs) as the core surge suppression component for the service entrance and all other distribution levels. The system shall not utilize silicon avalanche diodes, selenium cells, air gaps, or other components that may crowbar the system voltage leading to system upset or create any environmental hazards.

4. Protection Modes – The SPD must protect all modes of the electrical system being utilized. The required protection modes are indicated by bullets in the following table:

	Protection Modes			
Configuration	L-N	L-G	L-L	N-G
Wye	●	●	●	●
Delta	N/A	●	●	N/A
Single Split Phase	●	●	●	●
High Leg Delta	●	●	●	●

5. Nominal Discharge Current (I_n) – All SPDs applied to the distribution system shall have a 20kA I_n rating regardless of their SPD Type (includes Types 1 and 2) or operating voltage. SPDs having an I_n less than 20kA shall be rejected.

6. ANSI/UL 1449 3rd Edition Voltage Protection Rating (VPR) – The maximum ANSI/UL 1449 3rd Edition VPR for the device shall not exceed the following:

MODES	208Y/120	480Y/277
L-N; L-G; N-G	400V	800V
L-L	800V	1800V

7. ANSI/IEEE C High Let-Through Voltage – The let through voltage based on an ANSI/IEEE C62.41 Category C High waveform (10kV, 10kA) shall not exceed the following:

Mode	208Y/120	480Y/277
L-N	560V	960V

8. ANSI/IEEE Cat. B Ringwave Let Through Voltage – The let-through voltage based on an ANSI/IEEE C62.41 Category B ringwave (6 kV, 500 amps) shall not exceed the following:

Mode	208Y/120	480Y/277
L-N	160V	165V

B. SPD Design:

1. Maintenance Free Design – The SPD shall be maintenance free and shall not require any intervention throughout its life. SPDs containing items

such as replaceable modules, replaceable fuses, or replaceable batteries shall not be accepted. SPDs requiring any maintenance of any sort such as periodic tightening of connections shall not be accepted. SPDs requiring intervention to test the unit via a diagnostic test kit or similar device shall not be accepted.

2. Balanced Suppression Platform – The surge current shall be equally distributed to all MOV components to ensure equal stressing and maximum performance. The surge suppression platform must provide equal impedance paths to each matched MOV. Designs incorporating replaceable SPD modules shall not be accepted.

3. Electrical Noise Filter – Each unit shall include a high-performance EMI/RFI noise rejection filter. Noise attenuation for electric line noise shall be up to 50 dB from 10 kHz to 100 MHz using the MIL-STD-220A insertion loss test method. Products unable able to meet this specification shall not be accepted.

4. Internal Connections – No plug-in component modules or printed circuit boards shall be used as surge current conductors. All internal components shall be soldered, hardwired with connections utilizing low impedance conductors.

5. Monitoring Diagnostics – Each SPD shall provide the following integral monitoring options:

    a. Protection Status Indicators - Each unit shall have a green / red solid-state indicator light that reports the status of the protection on each phase.

        (1) For wye configured units, the indicator lights must report the status of all protection elements and circuitry in the L-N and L-G modes. Wye configured units shall also contain an additional green / red solid-state indicator light that reports the status of the protection elements and circuitry in the N-G mode. SPDs that indicate only the status of the L-N and L-G modes shall not be accepted.

        (2) For delta configured units, the indicator lights must report the status of all protection elements and circuitry in the L-G and L-L modes.

        (3) The absence of a green light and the presence of a red light shall indicate that damage has occurred on the respective phase or mode. All protection status indicators must

indicate the actual status of the protection on each phase or mode. If power is removed from any one phase, the indicator lights must continue to indicate the status of the protection on all other phases and protection modes. Diagnostics packages that simply indicate whether power is present on a particular phase shall not be accepted.

b. Remote Status Monitor – The SPD must include Form C dry contacts (one NO and one NC) for remote annunciation of its status. Both the NO and NC contacts shall change state under any fault condition.

c. Surge Counter – The SPD shall be equipped with an LCD display that indicates to the user how many surges have occurred at the location. The surge counter shall trigger each time a surge event with a peak current magnitude of a minimum of 50 ± 20A occurs. A reset pushbutton shall also be standard, allowing the surge counter to be zeroed. The reset button shall contain a mechanism to prevent accidental resetting of the counter via a single, short-duration button press. In order to prevent accidental resetting, the surge counter reset button shall be depressed for a minimum of 2 seconds in order to clear the surge count total.

(1) The ongoing surge count shall be stored in non-volatile memory. If power to the SPD is completely interrupted, the ongoing count indicated on the surge counter's display prior to the interruption shall be stored in non-volatile memory and displayed after power is restored. The surge counter's memory shall not require a backup battery in order to achieve this functionality.

6. Overcurrent Protection

a. The unit shall contain thermally protected MOVs. These thermally protected MOVs shall have a thermal protection element packaged together with the MOV in order to achieve overcurrent protection of the MOV. The thermal protection element shall disconnect the MOV(s) from the system in a fail-safe manner should a condition occur that would cause them to enter a thermal runaway condition.

7. Fully Integrated Component Design – All of the SPD's components and diagnostics shall be contained within one discrete assembly. SPDs or individual SPD modules that must be ganged together in order to achieve higher surge current ratings or other functionality shall not be accepted.

8. Safety Requirements

a. SPDs designed to interface with the electrical assembly via conductors shall require no user contact with the inside of the unit. Such units shall have any required conductors be factory installed.

2.03 SYSTEM APPLICATION:

A. The SPD applications covered under this section include distribution and branch panel locations. All SPDs shall be tested and demonstrate suitability for application within ANSI/IEEE C62.41 Category C, B, and A environments.

B. Surge Current Capacity – The minimum surge current capacity the device is capable of withstanding shall be as shown in the following table:

Minimum surge current capacity based on ANSI / IEEE C62.41 location category			
CATEGORY	Application	Per Phase	Per Mode
B	480 VAC Distribution Panelboards	160 kA	80 kA
A	208/120 VAC Panelboards	120 kA	60 kA

C. SPD Type – all SPDs installed on the line side of the service entrance disconnect shall be Type 1 SPDs. All SPDs installed on the load side of the service entrance disconnect shall be Type 1 or Type 2 SPDs.

2.04 LIGHTING AND DISTRIBUTION PANELBOARD REQUIREMENTS:

A. The SPD application covered under this section includes lighting and distribution panelboards. The SPD units shall be tested and demonstrate suitability for application within ANSI/IEEE C62.41 Category B environments.

1. The SPD shall not limit the use of through-feed lugs, sub-feed lugs, and sub-feed breaker options.

2. SPDs shall be installed immediately following the load side of the main breaker. SPDs installed in main lug only panelboards shall be installed immediately following the incoming main lugs.

3. The panelboard shall be capable of re-energizing upon removal of the SPD.

4. The SPD shall be interfaced to the panelboard via a direct bus bar connection. Alternately, an SPD connected to a 30A circuit breaker for

disconnecting purposes may be installed using short lengths of conductors as long as the conductors originate integrally to the SPD. The SPD shall be located directly adjacent to the 30A circuit breaker.

5. The SPD shall be included and mounted within the panelboard by the manufacturer of the panelboard.

6. The SPD shall be of the same manufacturer as the panelboard.

7. The complete panelboard including the SPD shall be UL67 listed.

2.05 SHOP TESTING:

A. Provide a factory performance test for each unit. The tests shall be in accordance with the latest version of NEMA and UL Standards:

PART 3 - EXECUTION

3.01 INSPECTION:

A. Visually inspect delivered unit(s) and accessories for conformance with the Contract Drawings and specifications.

3.02 INSTALLATION:

A. Install unit in compliance with the manufacturer's printed instructions. All electrical installation Work shall be in accordance with UL Listing Requirements and applicable Massachusetts Electrical Codes.

3.03 CHECKOUT AND TESTING:

A. Provide checkout, field, and functional testing in accordance with Sections 16050 and 16998.

3.04 CONTRACT CLOSEOUT:

A. Provide in accordance with Section 01700.

END OF SECTION

SECTION 16402

UNDERGROUND DISTRIBUTION SYSTEM

PART 1 – GENERAL

1.01 DESCRIPTION:

A. Provide underground distribution system as indicated and specified.

B. Conform to lines, grades, elevations, and dimensions. Resolve interferences with other underground conduit, piping or equipment, either new or existing with the Authority. Match components for installation.

C. Provide Schedule 40 polyvinylchloride (PVC) conduits for power and control circuits. Provide rigid galvanized steel conduits for instrumentation, communication, I/O, fire alarm and data highway cable circuits.

1.02 REFERENCES:

A. Massachusetts Electrical Code.

B. National Electric Safety Code.

1.03 SUBMITTALS:

A. Shop Drawings: Submit the following in accordance with Section 01300 and as specified herein.

1. Submit shop drawings and manufacturers' product data for all components and materials used in the construction of underground distribution systems in accordance with requirements of Section 16050.

2. Provide "As-Built" drawings of underground ductbank system in accordance with Section 01300.

1.04 DELIVERY, STORAGE AND HANDLING:

A. Provide delivery, storage, and handling of equipment and materials in accordance with Section 01600.

1.05 QUALITY ASSURANCE:

A. Provide in accordance with Section 01400.

1.06 SEISMIC REQUIREMENTS:

A. Conform to the requirements as indicated on the Structural Drawing S-1 and as specified in Section 01900.

PART 2 - PRODUCTS

2.01 ACCEPTABLE MANUFACTURERS:

A. Polyvinylchloride (PVC) Conduit:

1. Specified in Section 16110, Paragraph 2.01.B.

B. Rigid Steel Conduit, Galvanized:

1. Specified in Section 16110, Paragraph 2.01.A.

2.02 MATERIALS AND COMPONENTS:

A. Conduit Spacers: Furnish conduit spacers made of plastic to maintain spacing between conduits.

B. Cable Supports in Handholes shall be provided as follows:

1. Cable racks, stainless steel.

2. Cable supports, stainless steel.

3. Insulators, high grade dry-process porcelain.

PART 3 - EXECUTION

3.01 GENERAL:

A. Perform Work in accordance with the Massachusetts Electrical Code and as indicated and as specified.

3.02 INSTALLATION OF CONDUITS:

A. Lay conduits, indicated to be direct buried in the ground.

B. Provide separation of power and control conduits of 3 inches both vertically and horizontally. Build ductbank layer by layer. Coordinate with General Contractor to backfill and compact each layer to provide support for next layer.

C. Separate power and control ducts from instrument telephone, and signal ducts by 12 inches.

D. Provide yellow ductbank marker tapes, reading "Caution - Electrical Lines Below", over entire length of ductline. Locate tapes 12 inches below grade. Provide a tape for every 12 inches of width of ductline.

E. Install conduit, with spacers as specified. Rigid galvanized steel conduits to be painted with bituminous paint by others under Section 09941.

F. Install conduit runs following routing on drawing and running in straight lines. Provide end bells where ducts enter handholes of the same material as the duct system. Terminate steel conduit entering hand holes in grounding bushing. Where deviation from a straight line becomes necessary, install bends of radius which allow for rodding and installation of cable.

G. Accomplish changes in direction of runs exceeding total of 10 degrees, either vertical or horizontal, by long sweep bends having radius of curvature of 25 ft. Manufactured bends can be used at ends of short runs of 100-ft. or less, and then only at or close to the end of run. Provide long sweep bends made up of one or more curved or straight sections and/or combinations thereof. Install manufactured bends with radius of 36-in. where larger radius cannot be used.

H. Lay ductlines to slope of 4 inches per 100-ft. and slope to handholes from a high point between the handholes. Ductlines are to slope away from buildings.

I. Install spacers at intervals of 4 ft. and stagger between tiers of ducts to provide 12-in. of longitudinal separation. Install base spacers to provide 3-in. between bottom of trench and underside of bottom conduits. Coordinate with General Contractor to fill space with

concrete under Section 03300. Firmly wire conduits and spacers together before concrete is placed.

J. Prior to placing of concrete under Section 03300, General Contractor to remove all dirt, sand, and any other debris from between conduits and from trench bottoms under Section 02210. Hold conduits in place to prevent floating or accidental movement.

K. Stagger joints in conduits 6-in. Do not allow couplings to rest on bottom of trench. Install couplings for plastic conduit in accordance with manufacturer's recommendations.

L. General Contractor to install concrete encasements under Section 03300 so clearance of 12-in. from concrete to parallel pipes, lines, and structures, is maintained. Where ducts cross, clearance of 6 inches is required.

M. At a point close to the handhole wall, drive a ground rod into earth. Extend ground rod 6-in. above finished handhole floor. After completion of handhole by General Contractor under Section 03300, connect 6 foot length of No. 4 bar copper ground wire to ground rod. Connect grounding bushings, cable racks, covers, other metallic parts, splices, and ground wire installed with each feeder to ground loop.

N. Keep conduits clean of concrete, dirt, and other substances during the course of construction. After the ductlines have been completed, pull a standard flexible mandrel not less than 12-in. long, having a diameter 1/4-in. less than the inside diameter of the conduit, through each conduit, after which pull a brush with stiff bristles through each conduit to make certain that no particles of earth, sand, or gravel have been left in the line. Replace conduit runs that do not allow the passage of the mandrel at no additional cost to the Authority. Pneumatic rodding may be used to draw in the lead wire. Install in spare conduits a pull wire or rope and plug and seal spare conduits after cleaning.

3.03 AS-BUILT DRAWINGS OF UNDERGROUND WORK:

A. Provide one set of marked copies of contract drawings, showing exact routing and depths of all underground conduit and duct handholes. Provide scaled plot plans, showing principal outline of buildings and structures. Reference conduits, ducts, and all bends deviating from straight line, dimensionally from fixed objects or structures.

END OF SECTION

SECTION 16450

GROUNDING

PART 1 – GENERAL

1.01 DESCRIPTION:

A. Provide a single, integrated grounding system, including conductors, raceways, and connections, indicated and specified, and in accordance with the Massachusetts Electrical Code Article 250 and the National Electrical Safety Code.

B. Include grounding of, electric equipment enclosures, transformers, ground grid systems with ground rod and water pipe connections; structural steel, and lightning protection system.

C. Include grounding conductors completely inter-connecting water supply pipe, ground grid, substation, switchgear and motor control center ground buses, other distribution equipment, and other groundable equipment.

1.02 RELATED WORK:

A. Division 1: General Requirements

B. Division 16: Electrical

1.03 REFERENCES:

A. American National Standards Institute (ANSI):

1. ANSI C2: National Electrical Safety Code

B. National Fire Protection Association (NFPA):

1. NFPA 70: National Electric Code

2. NFPA 780: Lightning Protection Code

C. Massachusetts Electrical Code

D. American Society for Testing and Materials (ASTM):

1. B3: Soft or Annealed Copper Wire.

2. B8: Concentric-Lay-Stranded Copper Conductors, Hard, Medium-Hard, or Soft.

3. B33: Tinned Soft or Annealed Copper Wire for Electrical Purposes.

E. Underwriters Laboratories, Inc. (UL):

1. U.L. 44: Wires and Cables Rubber Insulated.

2. U.L. 83: Wires Thermoplastic-Insulated.

F. National Electrical Mfg's Association (NEMA):

1. WC 3: Rubber Insulated Wire & Cable.

2. WC 5: Thermoplastic Insulated Wire & Cable.

3. WC 7: Cross-Linked-Thermosetting Polyethylene-Insulated Wire & Cable.

4. WC 8: Ethylene-Propylene-Rubber-Insulated Wire & Cable.

1.04 SUBMITTALS:

A. Submit the following in accordance with Section 01300:

1. A copy of this specification section with addenda and all referenced specification sections with addenda, with each paragraph check-marked to indicate specification compliance.

a. Failure to include a copy of the marked-up specification sections will result in rejection of the entire submittal with no further review and construction.

2. Submit shop drawings and manufacturers' product data in accordance with requirements of Section 16050.

1.05 SEISMIC REQUIREMENTS:

A. Conform to the requirements as indicated on the structural drawings and as specified in Section 01900.

PART 2 - PRODUCTS

2.01 ACCEPTABLE MANUFACTURERS:

A. Ground Rods:

1. Erico Products Inc.

2. Galvan Electrical Products.

3. Nehring Electrical Works.

4. Or equal.

B. Exothermic Welding:

1. Erico Products, Inc.

2. American Brass Mfg. Co.

3. Orgo-Thermit, Inc.

4. Or equal.

C. Connecting Hardware:

1. American Brass Mfg. Co.

2. Thomas and Betts

3. Anderson Electric Corp.

4. Or equal.

2.02 MATERIALS AND COMPONENTS:

A. Conductors:

1. Provide tinned copper grounding conductors, sized as indicated. Provide protection of conductors if physical damage would result from direct exposure.

2. Provide uninsulated conductors where conductors are buried in the earth or where they are embedded in the concrete.

3. In buildings, provide insulated grounding conductors with green insulation. Provide insulated grounding conductors with insulation rated at 600 volts.

B. Ground Bus:

1. Provide a 2-in. by 1/4-in. tinned copper bar with bolted type connectors as indicated.

C. Ground Rods:

1. Provide copper-clad steel or galvanized steel ground rods; type, diameter and length as indicated on drawings. Make cable to ground rod connection without passing over end of ground rod.

D. Connections:

1. Provide silicon bronze ground clamps for use on copper or brass pipes which are UL listed.

2. Provide ground clamps, for use on iron pipes, of galvanized or malleable iron, or of standard noncorrosive material.

3. Furnish ground clamps, for use on pipes, with rigid metal base providing solid contact by seating on the pipe. Do not use strap type clamps.

PART 3 - EXECUTION

3.01 INSTALLATION OF GROUNDING CONDUCTORS:

A. Install grounding conductors so that they will not be exposed to physical damage. Install connections firm and tight. Arrange conductors and connectors so no strain on connections.

B. Run grounding conductors associated with direct burial cables in common trenches above or if indicated beside cables.

C. Bury equipment grounding conductors 30 inches deep. Bring loops or taps up for connection to equipment or other items to be grounded.

D. Where raceways are used to contain and protect grounding conductors, install in accordance with Sections 16110 and 16402.

E. Where bare grounding conductors are contained within metallic raceways, bond ends of raceways to conductors.

F. Install loop type, low impedance, grounding system interconnecting all components so two grounding connections are provided for each item of electrical equipment. Ensure that severing of any single grounding conductor in this system does not remove grounding protection on any major item.

G. Connect structural steel at locations indicated to the grounding loop and connect to each vertical column by loop or tap. Provide exothermic weld connections. Connect two opposite points on external loop to two different points on grounding system.

H. Buried and concealed ground connections are to use exothermic welding.

I. Make accessible connections to structural members by exothermic welding process. Connections to equipment or ground bus shall be by bolted connectors.

3.02 INSTALLATION OF GROUND RODS:

A. Install ground rods in manholes and handholes in accordance with requirements specified under Section 16402 - Underground Distribution Systems. Connect each grounding conductor entering a manhole or handhole to ground rod by exothermic weld.

B. Install ground rods where indicated. Install the top of the rod 12-in. below the ground surface.

C. Make connection to overall grounding system as indicated.

D. Ensure that final resistance of interconnected ground system is 3 ohms, or less. Measure ground resistance in normally dry conditions, and not less than 48 hours after rainfall.

3.03 EQUIPMENT GROUNDING:

A. Ground each piece of electrical equipment by means of a grounding conductor installed in raceway feeding that piece of equipment with copper wire sized in accordance with Massachusetts Electric Code. Grounding conductors installed in conduit with insulated conductors to be furnished with green, 600-volt insulation. Ground conductors are in addition to and not to be considered as the neutral wire of the system.

B. Connect power transformer cases and neutrals to grounding system. Connect neutral ground connection at transformer terminal. Provide two separate, independent, diagonally opposite, connections for power transformers so removal of one connection will not impair continuity of other.

C. Connect two separate ground connections from ground grid to ground bus of switchgear assemblies, motor control centers and outdoor generator. Confirm that each connection for item of equipment is from different section of ground grid.

D. Connect a grounding conductor between panelboard and grounding system. Where a grounding bar is furnished with panelboard, connect grounding conductor to bar.

E. Where conduits are not effectively grounded by firm contact with a grounded enclosure, apply grounding bushings on one end of conduit run.

F. Install a separate grounding conductor from ground system to motors of 100 hp. and larger, in addition to raceway system. Ground motor ground connection to motor frame, independent of mounting bolts or sliding base. Ground motor to nearest point on grounding system, unless otherwise indicated.

G. Connect grounding conductors from equipment in area where ground bus is required to ground bus. Connect ground bus to grounding system. Mount ground bus on 600V pedestal insulators.

H. Connect lightning arresters to ground system by suitable conductors. Where lightning arresters are furnished with electrical equipment and grounding connections are not inherently provided, confirm that separate grounding conductor connects lightning arresters with system ground.

I. Connect generator neutral to grounding system by a grounding conductor of size required by NEC, unless a larger size is indicated. Connect grounding conductor to generator disconnect enclosure and generator neutral on generator side of disconnect. Ground generator frame with two separate independent connections, so removal of one connection will not impair continuity of other.

J. Ground each street lighting standard or pole by ground rod driven near base of standard, in accordance with requirements of National Electric Safety Code. Connect ground rods to grounding conductor brought with street lighting feeder cable.

K. Ground transformers, lightning arresters, insulators, and other appurtenances, installed on poles, poles and timber structures, or metal structure. Run grounding conductors between poles or structure and ground rods. Protect grounding conductor by molding applied for 8 ft. above ground, with both molding and conductor stapled. Install ground rod where indicated and driven until top of rod is 1 ft. below ground.

L. Interconnect the water piping systems with the grounding system per the Massachusetts Electrical Code.

M. Ground wire fences when used to enclose electrical equipment or when overhead electrical lines cross fence. Unless otherwise indicated, provide grounding by buried outside peripheral ground loop; connections to each corner fence post and nearby ground rod; flexible connections to each gate; and at least two connections to grounding system from approximately opposite positions on fence.

N. Connect the ground rods to the grounding conductor run with the direct burial cable.

3.04 SIGNAL GROUNDING:

A. Ground signal surge protection and shields of twisted, shielded cable using a signal bonding conductor. The signal bonding conductor shall be a continuous path from the instrument surge protection or shield to the grounding electrode conductor. The signal bonding conductor shall be isolated from the equipment grounding conductor for its entire path.

B. Where convenient several signal bonding conductors may be conbined, providing that all the following conditions are met:

1. The combined signal bonding conductor shall have the equivalent cross section of the conductors that it was combined from or three times the cross section of the largest conductor that it was combined from, whichever is less.

2. The combined signal bonding conductor shall be isolated from the equipment grounding conductor.

3. Where two signal bonding conductors are combined use a three port insulated splice.

4. Where three or more signal bonding conductors are combined, use a copper bus mounted on 600V insulators. Attach each conductors to the bus using an insulated ring tongue lug and screw terminal.

3.05 TESTS AND CHECKOUTS:

A. Provide checkout and testing of the entire grounding system in accordance with Section 16050 and 16998 and as specified herein.

3.06 CONTRACT CLOSEOUT:

A. Provide in accordance with Section 01700.

END OF SECTION

SECTION 16761

VIDEO SURVEILLANCE SYSTEM

PART 1 – GENERAL

1.01 DESCRIPTION:

A. Provide and test a fully integrated Video Surveillance System at the Owner's facilities to accomplish the specified access control and monitoring functions.

B. Include all system design, configuration, programming, installation, wiring, electrical service, connection to the monitoring system, mounting hardware, appurtenance, and testing necessary for a fully functional Video Surveillance to meet operational requirements.

C. Provide and test all wiring and cabling required for the Video Surveillance System to operate in compliance with the specified requirements. Include system component installation, interfacing equipment items, and interconnecting wiring.

D. Provide all software, hardware, devices, power supplies, accessories, wiring, special cables, training, and support at the Owner's facilities required for the specified system operation.

E. Provide specific design with detail drawings and associated documentation extending the general requirements specified into a complete and operating system.

F. Provide all required electrical work in accordance with Division 16.

G. Connect, test, demonstrate and commission all system hardware, software, and system controls.

1.02 RELATED WORK:

A. Division 1: General Requirements

B. Division 16: Electrical

1.03 REFERENCES:

A. Underwriters Laboratories (UL):

1. UL 910 – UL Standard for Safety Test for Flame-Propagation and Smoke-Density Values for Electrical and Optical-Fiber Cables Used in Spaces Transporting Environmental Air.

2. UL 1581 VW-1 – Vertical Tray Cable Flame Test.

3. UL 1666 – UL Standard for Safety Test for Flame-Propagation Height of Electrical and Optical-Fiber Cables Installed Vertically in Shafts.

B. American National Standards Institute (ANSI):

1. ANSI C136.3 – Roadway Lighting Equipment-Luminaire Attachments.

2. ANSI C136.21 – Roadway Lighting – Vertical Tenons Used with Post-Top-Mounted Luminaires.

C. American Society for Testing and Materials (ASTM):

1. ASTM A153 – Standard Specification for Zinc Coating (Hot-Dip) on Iron and Steel Hardware.

D. National Electrical Manufacturers Association (NEMA).

E. Electronic Industries Association (EIA).

F. National Electrical Code (NEC).

G. FCC Compliance – Equipment supplied shall comply with FCC Emission Standards.

1.04 SYSTEM DESCRIPTION:

A. Work includes furnishing, calibrating, adjusting, testing, documenting, and start-up of a complete video surveillance, and access control system as indicated in the Specifications.

B. Major Components:

1. Number of cameras and approximate locations shown in drawings.

2. Provide equipment for system architecture as shown in drawings.

3. System software and capability of web-based monitoring.

4. Communications cabling and ancillary components necessary to provide a complete and functional system.

5. Electrical and communications wiring and installation required for a fully functional system. As part of the system, provide all appurtenance, including electrical service and mounting hardware to make the system complete, including

all duct banks, conduit and wire, and transformers for required electric service.

6. Uninterruptable power supply (UPS) to supply standby power to entire camera.

C. Description:

1. Cameras shall continuously monitor the exterior and interior of the EDC Chamber.

2. The system shall be configured such that the operator has instant access to camera feeds and control. The system shall allow for split screen for continuous viewing from all cameras.

1.05 SUBMITTALS:

A. Submit the following after award:

1. A copy of this specification section with addenda and all referenced specification sections with addenda, with each paragraph check-marked to indicate specification compliance.

a. Failure to include a copy of the marked-up specification sections will result in return of the entire submittal without further review.

B. Indicate all components and network topology. Include the following as a minimum:

1. Overall system block diagram, hardware placement, rack and equipment panel arrangements and layouts.

2. A functional description of the block diagram. Describe the overall system operation, interaction between system elements, and system operator interactions.

3. Include the manufacturer's name and model number for each hardware item shown on the block diagram, as well as auxiliary equipment such as power supplies.

4. Include a system architecture drawing showing the system controller, POE switch, cameras and point-to-point connection diagrams showing cable types and device terminal numbers; layout drawings for the control consoles, including front, side and plan views with all components identified; and pole, pole base and mounting bracket detail drawings.

1.06 QUALITY ASSURANCE:

A. Standard Products: Material and equipment to be the latest standard products of a manufacturer regularly engaged in the manufacture of the products. All equipment shall be new.

B. Accessibility: Provide enclosures with ample clearance to allow proper separation between the enclosure and live parts of the panel equipment. If more than one modular unit is required to form a control panel, provide the units installed in a single cabinet large enough to accommodate all units, and allow ample clearance for interconnections of panels and field wires.

1. Ensure that conduit size and wire quantity, size, and type are suitable for the equipment supplied. Review the proper installation of each type of device with the equipment supplier prior to installation.

C. Services of Service Technician, specifically trained on type of equipment specified. Person-day requirements listed exclusive of travel time.

1. Assist in location of devices, methods of mounting, and field erection.

2 person-day

2. Start-up and testing.

2 person-day

3. Person-day is defined as one 8-hour day, excluding travel time.

PART 2 – PRODUCTS

2.01 CAMERA DOME DRIVE SYSTEM

A. The CCTV camera dome drive systems shall consist of a discreet, miniature camera dome; variable speed/high speed pan and tilt drive unit with continuous 360 degree rotation; high resolution, color, CCD camera; 16x optical with additional 12X digital, auto focusing, motorized zoom lens; integral receiver/driver; and be available for pendant, ceiling, wall, pole, or parapet mounting.

1. The cameras shall support 10/100Base-T connections and TCP/IP, FTP, HTTP, SMTP, DHCP protocols, and be fully controlled and configured remotely through a web browser interface.

2. The color camera shall be a 1/3" effective sensor size.

3. The camera shall support a minimum 720 X 486 resolution.

4. The image sensor shall have a total pixel array of 811 (H) x 508 (V) and an effective pixel array of 768 (H) x 494 (V).

5. The cameras shall provide a horizontal resolution of 460 TV lines.

6. The cameras shall have automatic white balance.

7. The cameras shall provide an automatic shutter up to 1/10,000 sec.

8. The cameras shall automatically select the optimum shutter time in low light conditions, from 1/60 second to ½ second in 60 incremental steps.

9. The cameras shall have a signal-to-noise ratio of 46dB.

10. The cameras should support a maximum frame rate of 30 fps.

11. The cameras must support video motion detection and provide alarm contacts.

12. The cameras must use image compression schemes with a minimum 10:1 (typical 30:1) ratio.

13. The cameras should support flash-memory updates through its network connection.

14. Minimum operating temperature range of 10 degrees C to 50 degrees C.

B. The system shall be FCC Class B compliant and CE Class B compliant.

C. Provide cameras and drive units from AXIS.

2.02 CAMERA:

A. The high resolution, color CCD camera shall meet or exceed the following design and performance specifications:

1. The cameras shall support 10/100Base-T connections and TCP/IP, FTP, HTTP, SMTP, DHCP protocols, and be fully controlled and configured remotely through a web browser interface.

2. Camera shall be powered by Power over Ethernet (PoE)

3. The color camera shall be a 1/3" effective sensor size.

4. The camera shall support a minimum 720 X 486 resolution.

5. The image sensor shall have a total pixel array of 811 (H) x 508 (V) and an effective pixel array of 768 (H) x 494 (V).

6. The cameras shall provide a horizontal resolution of 460 TV lines.

7. The cameras shall have automatic white balance.

8. The cameras shall provide an automatic shutter up to 1/10,000 sec.

9. The cameras shall automatically select the optimum shutter time in low light conditions, from 1/60 second to ½ second in 60 incremental steps.

10. The cameras shall have a signal-to-noise ratio of 46dB.

11. The cameras should support a maximum frame rate of 30 fps.

12. The cameras must support video motion detection and provide alarm contacts.

13. The cameras must use image compression schemes with a minimum 10:1 (typical 30:1) ratio.

14. The cameras should support flash-memory updates through its network connection.

15. Minimum operating temperature range of 10 degrees C to 50 degrees C.

B. The system shall be FCC Class B compliant and CE Class B compliant.

C. Provide cameras and drive units from AXIS.

2.03 CAMERA MOUNTS:

A. Outdoor camera mounts shall be comprised of a pole mount adapter unit designed for use with a square aluminum pole, as indicated. Construction shall be anodized aluminum. Outdoor camera mounts shall have a minimum load rating of 150 pounds as well as withstand 110 mph winds and shall be furnished with all hardware (stainless steel straps, chains, adapter plates) to secure to pole and support pan-tilt units. Outdoor camera mounts shall be as manufactured by AXIS

2.04 POWER SUPPLIES:

A. Provide power supplies and associated hardware for each camera.

B. All equipment shall be powered from a UPS system.

1. UPS shall be sized to provide 15 minutes of operation time upon loss of normal power for load attached.

2. UPS shall be line-interaction or double conversion type.

2.05 EQUIPMENT ENCLOSURES:

A. Equipment enclosures shall be used to house networking devices. The enclosure shall be a minimum 24” W x 36” H.

2.06 WIRE AND CABLE:

A. Provide wire and cable of the type, size and quantity required to make the system operational. Wire and cable shall be installed in conduits. Provide all required conduit, wire, transformers, and electrical devices required to make the system fully operational.

2.07 MANAGED ETHERNET SWITCH:

A. The Ethernet switches shall be Cisco C3560CX-12PC-S (no substitution).

B. Ratings:

1. The managed Ethernet switch shall be rated for:

a. -40 to 60 °C (-40 to 140 °F) operating temperature.

b. 5 to 95% noncondensing ambient relative humidity.

C. The Switch shall be UL-listed Industrial Control Equipment.

D. Construction:

1. The switch shall have:

a. Power Source: Single 120 VAC power source.

b. PoE: 12 ports capable of Power over Ethernet (PoE), providing electrical power along with data on a single Ethernet cable to end devices.

c. Alarms: 6-pin alarm connector to provide an interface for 1 output alarm relay circuit and 2 input alarm relay circuits.

d. LEDs: 4 LED indicators displaying hardware and network link status.

PART 3 – EXECUTION

3.01 EXAMINATION:

A. Inspect facility that is to be monitored by this Section.

3.02 INSTALLATION:

A. Configure, install, interconnect, and test all system equipment as specified.

B. Provide all labor, materials, and equipment necessary to furnish and install the CCTV System as specified.

C. Install in accordance with the manufacturer's instructions and locate equipment as indicated, unless otherwise directed.

D. Furnish and install wire and cable in raceways. Inspect raceways prior to pulling in cables.

E. Installation shall be in accordance with the NEC.

F. System Grounding: Isolate video components from multiple grounds by use of insulating spacers, nylon camera mounting bolts, and electrical tape around coaxial splices.

G. Provide terminal blocks for all necessary interconnecting wiring.

H. Secure all cable bundles with cable ties. Provide support bars in enclosures for cable bundles.

I. Label all indicators, switches, monitors, jacks, and controls.

J. Permanently tag all cables with wire markers covered with clear heat-shrink tubing.

K. Terminate spare equipment outputs with appropriate terminators.

L. Provide continuous wiring between equipment or junction box terminals.

3.03 ADJUSTING:

A. Conduct process operational assistance for each system component as placed into service and as requested the Owner.

3.04 DEMONSTRATION:

A. Provide start-up services, include programming required to make the system fully functional, energizing all equipment, testing each camera, testing viewing, and fully demonstrating each component of the system. Provide all necessary modifications to make the system comply with this Specification.

B. Start up:

1. Inspect each System for conformity and compliance of materials, equipment, and construction.

2. Inspect each installation for conformity with manufacturer's recommendations. Correct any discrepancies or improper conditions.

3. Energize and verify correct operation of all components of each System. This operation includes verification of accuracy of all interconnecting wiring.

4. Adjust all control components to provide stable control of System.

5. Schedule inspection with Owner to approve and verify satisfactory compliance with this section.

END OF SECTION

SECTION 16900

ELECTRICAL CONTROLS AND MISCELLANEOUS ELECTRICAL EQUIPMENT

PART 1 – GENERAL

1.01 DESCRIPTION:

A. Provide and connect the electrical control equipment and miscellaneous electrical equipment, including such instruments and devices indicated and specified. Device enclosures for electrical equipment shall comply with the requirements of Massachusetts Electric Code.

1.02 RELATED WORK:

A. Division 1: General Requirements

B. Division 11: Equipment

C. Division 13: Special Construction

D. Division 15: Mechanical

E. Division 16: Electrical

1.03 REFERENCES:

A. Underwriter's Laboratories, Inc. (U.L.):

1. UL-467: UL Standard for Safety, Grounding and Bonding Equipment.

2. UL-489: UL Standard for Safety, Molded-Case Circuit Breakers, and Circuit Breaker Enclosures.

3. UL-823: Electrical Heaters for Use in Hazardous (Classified) Locations.

B. National Electrical Manufacturers Association (NEMA):

1. 250: Enclosures for Electrical Equipment (1000 volts maximum).

2. ICS 1: General Standards for Industrial Control and Systems.

3. ICS 2: Industrial Control Devices, Controllers and Assemblies.

4. ICS 4: Terminal Blocks for Industrial Use.

C. American Society for Testing and Materials (ASTM) Publications:

1. D 178: Specification for Rubber Insulating Matting.

D. National Fire Protection Association (NFPA):

1. NFPA-70 National Electric Code (NEC).

E. Massachusetts Electric Code.

1.04 SUBMITTALS:

A. Submit the following in accordance with Section 01300:

1. Submit shop drawings and manufacturer's product data, brochures including wiring diagrams in accordance with Section 16050.

2. Wiring diagrams to show control interface points provided with other equipment.

3. Shop drawings to include:

a. Outline drawings with elevations.

b. Equipment arrangement drawings.

c. Anchor bolt location drawings.

d. Electrical schematics and wiring diagrams.

e. Electrical fuse/circuit breaker characteristic.

f. Equipment performance curves and technical data.

g. Bill of installation/assembly materials.

h. Equipment weights.

i. Completed manufacturer’s data sheets.

j. Assembly sizes and weights.

1.05 SEISMIC REQUIREMENTS:

A. Conform to the requirements as indicated on Structural Drawing 00-S-001 and as specified in Section 01900.

PART 2 - PRODUCTS

2.01 ACCEPTABLE ELECTRICAL DISTRIBUTION MANUFACTURERS:

A. Allen-Bradley.

B. General Electric Company.

C. Cutler-Hammer.

D. Square D Company.

E. Appleton Electric Company.

F. Crouse-Hinds Company.

G. O-Z/Gedney.

H. Or equal.

2.02 ACCEPTABLE STAINLESS STEEL/GALVANIZED STEEL CHANNEL MANUFACTURERS:

A. Unistrut Corp.

B. Power-Strut.

C. B-Line Systems, Inc.

D. Or equal.

2.03 ACCEPTABLE FIBERGLASS CHANNEL MANUFACTURER:

A. Omnistrut, Champion Fiberglass.

B. Durostrut, Enduro Composite Systems.

C. Struttech, Entrum Industries.

D. Or equal.

2.04 SAFETY DISCONNECT SWITCHES:

A. Provide heavy duty type, safety switches, with external operating handles, 3 PST, rated 600 volt, 60 Hertz with ampere rating as indicated, and having provisions for padlocking.

B. Provide rejection type fuses, 600 volts, 200,000 A.I.C., dual element, time delay, Class RK-5.

C. Heavy duty safety switches to be UL listed and meet or exceed NEMA Standard KS1.

2.05 PUSHBUTTON AND SELECTOR SWITCH STATIONS:

A. Provide RUN-OFF-AUTO switches, start-stop, push buttons, tumbler switches and other accessory devices as necessary for the control of motors and other electrical equipment or devices as indicated where shown on the wiring schematics and/or plan drawings.

B. Provide pushbutton and selector switch stations made for heavy-duty service and with momentary or maintaining contacts as indicated or as necessary for starting and stopping of equipment with 10 amp contact ratings.

C. Acceptable manufacturers of heavy-duty switches and pushbuttons are Square D, Cutler-Hammer, Allen Bradley or equal. Indicating lights to be led cluster type.

D. At stations provide nameplates with white letters on black background.

E. Stations shall meet NEMA 4X area requirements.

F. Provide galvanized cast-iron enclosures for NEMA Type 4 watertight stations.

G. Provide fiberglass reinforced polyester NEMA Type 4X enclosures for stations located in highly corrosive areas. Provide gaskets and Type 316 stainless steel screws, to prevent entry of chemicals.

2.06 MANUAL MOTOR STARTERS:

A. Provide manual motor starters where indicated and for 120-volt, 60-Hertz fractional horsepower motors.

B. Provide each manual motor starter with overload heater or heaters of suitable capacity for motor-running over-current protection for motor it controls. Provide manual starters as single or 2 pole, as necessary, and with toggle mechanisms indicating OFF and ON positions

C. Manual starters to be located within sight of motors, as defined by Massachusetts Electric Code.

2.07 WALL-MOUNTED COMBINATION STARTERS:

A. Unless otherwise indicated, provide each combination starter with motor circuit protector and full-voltage magnetic starter. Provide starters in an enclosure that meets the requirements of the enclosure schedule.

B. Indicating lights shall be LED cluster type, heavy-duty, oil-tight units. Lights shall be Red for “OFF” position, Green for “ON” position and Amber for “Alarms”.

2.08 CONTROL PANELS AND ELECTRICAL ENCLOSURES:

A. Provide enclosures with back panels constructed of at least 14 gage stainless steel and provided with terminal blocks for connection of external wiring. Provide door and body stiffeners in panels over 36 inches in length. NEMA 4X panels shall be provided with hand operated quick disconnects of 316 stainless steel material.

B. Provide nameplates for each panel and each device on panel. Nameplates of laminated plastic material, at least 3/32 in. thick, and with white letters on a black background.

C. Secure nameplates with self-tapping, Type 316 stainless steel metal screws.

D. Terminal Blocks:

1. Provide terminal blocks rated for 600 volts with screw type terminals.

2. Terminal blocks to be one piece with full barriers.

3. Acceptable manufacturers of terminal blocks are General Electric, Marathon, Weidmuller or equal.

E. Provide enclosures types rated to meet the requirements of the Environmnetal Classification Schedule indicated on the Contract Electrical Drawings.

F. Provide control panels and electrical enclosures with locks which are keyed the same.

G. Provide air condition units where indicated. Provide calculation verifying size of AC unit.

2.09 RUBBER MATS:

A. Provide insulating rubber mats conforming to ASTM D-178 Type I, Class I: Mats shall be 3 ft. wide and have a length equal to the equipment before which they are to be placed. Provide two spare mats, each 12-feet long as spares.

B. Provide mats for transformers, switchboard, panelboards, motor control centers, control panels, SCADA racks, Fire Alarm Panels, and variable frequency drives.

2.10 CONTACTORS AND RELAYS:

A. Provide mechanically held, heavy duty industrial type contactors (relays) for lighting control, rated 30 amps, 600 volts, with number of poles as indicated.

B. Provide contactor in the required NEMA enclosure suitable for wall mounting. Provide circuit breaker or fuse protection on each ungrounded pole. Provide mechanically held contactor from the following acceptable manufacturers: Automatic Switch Company 917 series, Cutler-Hammer, Square D or equal.

C. Provide control power transformer with primary and secondary fuse protection. Control power to be 120 volts, single phase.

D. Provide solid-state, industrial grade timing relays from the following acceptable manufacturers: Allen Bradley Series 700, Cutler-Hammer, Siemens or equal.

E. Provide industrial grade relays, NEMA rated, from the following acceptable manufacturers: Square D Class 8501, Cutler-Hammer, Allen Bradley or equal.

2.11 NAMEPLATES:

A. Provide nameplates for equipment (including pushbutton and selector switch stations) listed in this Section to designate the equipment controlled and their function.

B. Nameplates shall be laminated black bakelite with one-quarter inch (1/4-in.) high, white, recessed letters. Securely attach to the equipment with Type 316 stainless steel screws, or rivets. Adhesives, glue, or cements will not be permitted.

C. Provide all junction boxes, pull boxes, disconnect switches, and control panels with a nameplate to designate the system wiring contained within.

D. Install nameplates in a location near or on the equipment or devices.

2.12 TERMINAL BLOCKS:

A. Provide terminal blocks in all terminal boxes panels, control and instrumentation cabinets/panels requiring terminations as indicated on drawings or by wiring diagrams for

equipment actually purchased. All terminals shall be rated 600V, 20 amp. All terminals shall be screw type with provisions for white wire markers.

2.13 CHANNEL:

A. Provide Type 316 stainless steel channel or fiberglass channel with corresponding accessories as specified in Section 16110 and herein.

B. Provide hot-dipped galvanized after fabrication for steel channel and accessories.

C. Provide channel of the proper material to match equipment classifications, per Section 16110.

2.14 NETWORK EQUIPMENT ENCLOSURES:

A. Network equipment enclosures shall be used to house networking devices and patch panels.

B. Network equipment enclosures shall provide a wire duct for communication cables and fiber optic cables between the communication devices in control panel and communication raceways.

2.15 CONNECTING CORDS, DEVICES AND ADAPTERS:

A. Optical patch cords shall be provided to patch the network switches to the patch panel. Connectors to be compatible with the network equipment.

2.16 OPTICAL HARDWARE:

A. Manufacturers: Ortronics, Corning Cable Systems, 3M Telecom Systems, Group, or approved equal.

B. Connector Panels: Rack and wall mountable connector housings shall accept an interchangeable connector panel. A connector panel is defined as a modular removable plate containing optical fiber connector adapters or copper jacks. The connector panel shall have the following characteristics:

1. The connector panel shall utilize a single mounting footprint and shall be available with three, four, six, eight or twelve connector adapters in each panel. Copper jack panels shall accept up to four copper jacks. The connector panel shall be interchangeable between the rack and wall mountable hardware being proposed. The panel shall be attached with two push-pull latches to allow quick installation and removal.

C. Connector Modules: Rack mountable connector housings shall accept an interchangeable connector module. A connector module is defined as a modular removable case containing optical fiber connector adapters and provisions for strain-relief, slack storage, and the furcation of fiber optic cables.

D. Rack Mountable Connector Housings: Rack mountable connector housings shall be available for cross-connecting or inter-connecting purposes. The units shall provide for direct connectorization and pigtail splicing.

PART 3 - EXECUTION

3.01 CHANNELS:

A. Install Type 316 stainless steel for mounting of electrical equipment in outdoor areas, NEMA 4 or 4X areas, and on below grade, outside building and structure walls.

B. Install galvanized steel channels for interior building mounting of electrical equipment except for those locations listed in Paragraph 3.02.A of this Section.

C. Install fiberglass channel in chemical areas with NEMA 4X enclosures.

3.02 PHYSICAL CHECKOUT AND TESTING:

A. Provide field and functional testing in accordance with Sections 16050 and 16998 and as specified herein.

3.03 CONTRACT CLOSEOUT:

A. Provide in accordance with Section 01700.

END OF SECTION

SECTION 16998

FIELD INSPECTION AND ACCEPTANCE TESTS

PART 1 – GENERAL

1.01 DESCRIPTION:

A. Provide field inspections and acceptance testing as specified herein.

B. After electrical installation is complete, (a) adjust and set all protective devices (in accordance) with results of electrical studies, (b) perform tests to demonstrate that the entire system is in working order and in accordance with applicable codes, manufacturer's instructions, drawings, and specifications. Test shall be performed per International Electrical Testing Association (NETA): Acceptance Testing Specification for Electrical Power Distribution System and Equipment (STD). Tests are in addition to, and not a substitution for, tests of individual items at the manufacturer's facilities. Perform insulation and ground resistance tests before operating tests. Determine proper rotation of motors before permanent connections are made.

C. Tests are also intended to accomplish the following:

1. Provide initial acceptance tests and recorded data.

2. Ensure a successful start-up with a minimum of last minute interruptions and problems.

3. Determine the suitability of the equipment and systems for energizing and placing into operating service.

4. Ensure that each system component is installed satisfactorily, will perform and will continue to reliably perform its function.

D. Provide all necessary supervision, labor, materials, tools, test instruments or other equipment or services and expenses required to test, adjust, set, calibrate, functionally and operationally check all work and components of the various electrical systems and circuitry throughout the installation.

E. Engage the services of a nationally recognized Independent Electrical Tester to perform the required field inspections, test, and adjustments specified. The Independent Electrical Tester shall meet the following qualifications:

1. The testing firm is not to be a subsidiary, division, or department of the Contractor performing the work of Division 16.

2. The testing firm is not to be subsidiary, division, or department of the manufacturer of the equipment, materials or systems being inspected or tested.

3. The testing firm shall perform all testing in accordance with International Electrical Testing Association, Inc. (NETA), standards and procedures. All testing results shall be submitted on NETA forms and the testing data shall be certified by a Registered Professional Electrical Engineer. Test results shall indicate recommended action for sub-par test results. Results shall list recommended test values that should be obtained for a new installation.

4. Testing and checkout work shall be performed with personnel skilled and trained in the particular tests being conducted.

5. Evidence of the proposed testing firm's qualifications, accreditation, and experience shall be submitted for evaluation. Testing firm shall be member of NETA with minimum of five years of testing industrial electrical systems to NETA requirements and procedures.

F. The Independent Electrical Testing Contractor shall provide supervision, labor, materials, tools, test instruments, or other equipment, and services, required to adjust, set, calibrate, and test operate the components of the various electrical systems and circuits throughout the installation, the construction package, and as specified herein.

G. Perform these tests after the electrical installation is complete. These tests shall demonstrate that the entire electrical system is in proper working order and in accordance with applicable codes; and the supplier's instructions, drawings, and specifications.

H. Testing by the Independent Electrical Tester in no way changes the requirements to perform the specified tests, checkouts, and inspections required under the equipment specification sections.

I. The listings and descriptions of the tests, and checks described herein is not to be considered as complete and all inclusive.

J. Retests required by defects and failures of equipment to meet specifications shall be conducted at no additional cost.

1. Replace wiring and equipment found to be defective, or failing to meet specified requirements, at no additional cost.

2. Supply electric current necessary for tests.

K. Where specified in other Division 16 sections, perform work under the supervision of factory trained technicians, representing the equipment being tested or inspected.

1.02 RELATED WORK:

A. Division 1: General Requirements

B. Division 16: Electrical

1.03 SUBMITTALS:

A. Submit the following in accordance with Section 01300:

1. Submit inspection and testing forms for all electrical distribution equipment to be inspected and tested under this section.

2. Submit data sheets for the insulation resistance testing of conductors and motors prior to performing operating testing. List all cables and motors to be tested.

3. Provide space on data sheet forms to enter the results of testing, instruments used with serial numbers, and name of personnel performing testing. This data to be filled out during testing.

4. After completion of the testing, submit all test results with observed notes and recommendations.

1.04 REFERENCES:

A. All inspections and tests shall be in accordance with the following applicable codes and standards latest revisions except as provided otherwise herein.

1. National Electrical Manufacturer's Association – NEMA

2. American Society for Testing and Materials – ASTM

3. Institute of Electrical and Electronics Engineers – IEEE

4. InterNational Electrical Testing Association – NETA – Acceptance Testing Specification for Electric Power Distribution Equipment and Systems (STD).

5. American National Standards Institute – ANSI:

a. ANSI C2: National Electrical Safety Code

b. ANSI Z244-1: American National Standard for Personnel Protection

6. State and Local Codes and Ordinances

7. Insulated Cable Engineers Association – ICEA

8. Association of Edison Illuminating Companies – AEIC

9. Occupational Safety and Health Administration:

a. OSHA Part 1910; Subpart S, 1910.308

b. OSHA Part 1926; Subpart V, 1926.950 through 1926.960

10. National Fire Protection Association – NFPA:

a. ANSI/NFPA 70B: Electrical Equipment Maintenance

b. NFPA 70E: Electrical Safety Requirements for Employer Workplaces

c. ANSI/NFPA 70: National Electrical Code

d. ANSI/NFPA 780: Lightning Protection Code

e. ANSI/NFPA 101: Life Safety Code

B. All inspections and tests shall utilize the following references:

1. Project Design Specifications

2. Project Design Drawings

3. Manufacturer's instruction manuals applicable to each particular apparatus

1.05 SCHEDULING:

A. The Contractor is responsible for the preparation of proposed procedures, testing and inspection forms, and schedules for all inspections, tests, settings, and calibrations specified or otherwise required prior to or during the check out for start-up and acceptance of all the electrical components, equipment, and systems. This work to be coordinated and to be compatible with the work of other crafts and the project schedule. The above must be organized and submitted with all proposed testing and NETA approved check out forms for the review. The procedures must provide specific instructions for the checking and testing of each component in addition to the system

functional checks.

B. Prior to check out and testing for start-up, verify that all equipment and wiring is permanently identified with nameplates and tags. Check and tighten all terminals and connection points, remove all shipping blocks and hardware, thoroughly clean all equipment, repair all damaged or scratched finishes, inspect for broken and missing parts and review and collect manufacturer's drawings and instructions. Make routine checks and tests as the job progresses to verify that all wiring and equipment are properly installed.

C. Safety practices shall include, but are not limited to, the following requirements:

1. Occupational Safety and Health Act

2. Accident Prevention Manual for Industrial Operations, National Safety Council

3. Applicable state and local safety operating procedures

4. Owner's safety practices

5. National Fire Protection Association

6. American National Standards for Personnel Protection

D. All tests shall be performed with apparatus de-energized. Exceptions must be thoroughly reviewed to identify safety hazards and devise adequate safeguards.

E. The testing firm shall have a designated safety representative on the project to supervise the testing operations with respect to safety.

F. Ensure that all testing and checkout work is conducted in a safe manner. Special safety precautions such as the following to be utilized where appropriate:

1. Locking and tagging procedures

2. Barricades

3. De-energization and/or isolation of equipment prior to testing

4. Review of procedures with site personnel

5. Erection of warning signs

6. Stationing of guards and watchmen

7. Maintenance of voice communications

8. Personnel orientation

G. Report all inspections, tests, and calibration in writing on NETA approved report forms. The recorded data from shall have the signatures of the persons conducting the tests and authorized witnesses. The forms shall serve as the test and inspection checklist for inspection requirements. Submit all test and check out data in accordance with Section 01300 prior to adjustments, repairs, drying out, or similar work prior to final testing and acceptance. "As-found" and "as-left" test data to be recorded and reported in writing.

H. Sequence tests and checks such that the equipment can be energized immediately after the completion of the applicable tests.

PART 2 - PRODUCTS

2.01 TESTING EQUIPMENT:

A. Calibration:

1. All calibration and setting checks by the Independent Electrical Test shall be performed with the laboratory's calibrated test instruments. This test equipment to have calibrations traceable to the National Bureau of Standards. The Independent Electrical Tester dated calibration labels shall be visible on all test equipment. Calibrations over 6 months old will not be acceptable on field test instruments. All testing instruments shall be checked to verify satisfactory operation prior to proceeding with the tests. Serial and model numbers of the instruments used shall be recorded on the test forms.

2. Make necessary openings in circuits for testing instruments and place and connect all instruments, equipment, and devices, necessary for the tests. Upon completion of tests, remove instruments and instrument connections and restore all circuits to permanent condition.

2.02 TESTING:

A. Coordination:

1. Coordinate activities, and cooperate with others on project, to ensure that systems are ensure that systems are energized when required, loads applied, and other requirements are carried out on timely, coordinated basis.

2. Conduct tests in presence of the Owner's representative. Provide ten calendar days or more advance notification of when any test is to be performed.

3. Conduct testing such that warranties or guarantees are not voided. Coordinate all testing with manufacturer's factory trained technicians, where applicable. Where specified tests are not compatible with the manufacturer's recommendations, obtain the manufacturer's review prior to testing. Permit witnessing by the manufacturer's representative if so requested.

B. Preparation:

1. Make up no low voltage connections at service entrance, transformers, motors, permanently until correct phase rotation of all equipment is determined. Install and insulate these connections temporarily, if necessary, while determining proper rotation. Make permanent connections after proper rotation has been established and subsequent to completion of insulation resistance and dielectric tests.

PART 3 – EXECUTION

3.01 INSULATION TESTS OF EQUIPMENT, CABLE, AND CIRCUITS:

A. Independent Electrical Testing:

1. The Independent Electrical Tester shall perform all inspections and testing as specified herein.

B. List each circuit and measured resistance as test data.

C. Maintain records of all insulation resistance values. Identify conductor, or equipment, date that value was taken, and resistance value. Submit the information in neat tabular forms.

3.02 SPECIFIC TESTS AND INSPECTIONS:

A. General:

1. The following specific items or work shall be performed by the Independent Electrical Tester. The equipment and cable shall be de-energized and isolated as necessary to perform the tests.

2. Perform tests and inspections as specified throughout Division 16. Tests and inspections required by these sections are not necessarily repeated under this section.

3. Provide assistance as requested by the Independent Electrical Tester in performing its work.

B. Equipment Test and Inspection During Construction and Prior to Acceptance Testing:

1. Motors:

a. Visually inspect the motor for any physical damage.

b. Before energizing any machine, visually inspect for serviceability. Verify that proper alignment has been performed. Check nameplate for electrical power requirements.

c. Test run all motors before placing into regular service. A check on the motor for rotation, speed, current and temperature rise shall be made and results recorded. Maintain the proper color codes for phase identifications. A motor phase rotation meter should be used prior to connection at motor to prevent later swaps of phase wires.

2. Grounding Systems:

a. All main plant building loops and major equipment grounds to be tested to remote earth or directly referenced to an extremely low resistance (3 ohm) reference ground benchmark. Visual inspection of all systems, raceway, and equipment grounds to be made to determine the adequacy and integrity of the grounding. All ground testing results to be properly recorded, witnessed, and submitted.

b. Ground tests shall be performed in accordance with NETA using a J. G. Biddle Company low resistance, Null balance type, ground testing ohmmeter, and test lead resistance compensated for. The test instrument to be the type, which compensates for potential and current rod resistances.

c. Test entire grounding system for continuity of connections and for resistance. Ensure that ground resistance of conduits, equipment cases, and supporting frames does not vary appreciably from that of system as whole and does not exceed 3 Ohms.

3. Circuit Breakers – Low Voltage:

a. At the time of equipment receipt, visually check the exterior for any damage or defects.

b. Perform complete inspection and electrical test in accordance with NETA.

4. Dry-Type Transformers:

a. All 480 volt primary, air-cooled, transformers shall be given an insulation test, by means of a megger, after connections with the primary cables are complete. The supply cable shall be meggered with the primary winding and to the open air circuit breaker. Secondary leads may be meggered with the secondary windings to the open load breakers.

b. Check continuity and correctness of connections of all windings and ratings.

c. Perform inspection checks, and electrical tests in accordance with NETA.

5. 600 VAC Wire and Cable:

a. Before energizing, the continuity and insulation resistance of all wiring shall be measured with a megger from each wire to all others and to ground.

b. All cables and wires to be checked for proper identification numbering and/or color coding.

c. Perform inspection checks and electrical tests in accordance with NETA.

6. Overhead Conduit Systems:

a. The overhead conduit system to be checked for proper installation by using the following check list: (This list not to be considered all inclusive but as a guide for inspection).

(1) Conduits are supported on appropriate independent supports (i.e., not on process piping, pipe ways, or piping hangers).

(2) Exposed conduits are run in a neat workmanlike manner, parallel or perpendicular to structural members.

(3) Conduits are routed as far away from possible fire hazards and heat sources as practical.

(4) Conduits are supported at the required intervals.

(5) Pull boxes and fittings are installed so that covers are easily removable. Verify that all covers are installed and tightly bolted with gaskets provided where needed.

(6) Number of bends in the conduit does not exceed NEC requirements without a pull box installed.

(7) Circular cross sectional area is uniform at conduit bends. Single bends do not exceed 90 degrees.

(8) Conduits are terminated in threaded hubs or bushings to prevent damage to wire.

(9) Conduits joints have joint compound of the type specified and are tight and conduit ends are properly reamed and threaded not to engage less than 5 threads.

(10) Pull fittings are of adequate size such that cable can be installed and replaced at a later date without bending the cable less than code or manufacturer's requirements.

(11) Seal fittings and/or sealing compound is installed at moisture barriers to prevent entry of moisture into equipment and/or where shown on plans.

(12) Drains and conduit seals are installed on vertical conduit runs entering devices, equipment, and enclosures to prevent entrance of moisture.

(13) Flexible conduit is installed at motors and other equipment as specified or required. Verify that all cabling and conduit runs are properly identified at each end.

7. Panelboard electrical checks to be as included in the Wire and Cable section of this specification. Panelboards to be checked for proper circuit identification on the door schedule.

8. Sealing of Openings: Inspect the entire job to ensure that all openings and holes provided or utilized are properly sealed as specified.

9. Where referenced NETA Standards indicate optional testing, perform these tests as described.

3.03 FIBER OPTIC PHYSICAL CHECKOUT:

A. General Procedures:

1. Conduct physical checkout of the fiber optic data highway network.

2. Physical checkout shall be performed prior to functional testing.

B. Check Procedures:

1. Verify that fiber optic cables reels have been off-loaded from truck carefully and not damaged.

2. Verify that the optical fibers of the cable assembly are the type and quantity as specified.

3. Verify that cable construction is the type specified.

4. Verify that fiber optic patch panels have been installed plumb and level at locations indicated.

5. Verify that fiber optic splice closures have been installed at locations indicated.

6. Verify that optical fiber connections or terminations within patch panels and splice closures are in accordance with cable manufacturer's printed recommendations.

3.04 FIBER OPTIC FIELD TESTING:

A. Conduct the following field tests after cable installation:

1. Visually, inspect terminal connectors for out-of-round condition and surface defects such as micro-chips and cracks using a 100X (minimum) inspection microscope.

B. Cable Testing:

1. Provide equipment, instrumentation, and supplies necessary to perform testing. Engineer and Owner shall have the option to witness and participate actively in on-site tests.

a. Notify Engineer and Owner at least 10 days prior to testing.

2. Perform all tests and inspections as required by NETA.

3. Post-Installation Testing: Demonstrate that all fibers in each cable meet requirements of TIA-568 as modified here:

   a. Maximum attenuation as specified.

   b. Measure attenuation in both directions, not in one direction only.

4. Each cable shall be tested with an Optical Time Domain Reflectometer (OTDR) to verify installed cable length and splice losses. The OTDR measurements for length shall be performed in accordance with EIA/TIA-455-60. The measurements to determine splice loss shall be performed in accordance with manufacturer's recommendations.

   a. Each strand shall be tested on all outside plant cables and/or where splices exist.

5. Replace all cables or mated connector pairs that do not meet attenuation standards and redo tests until cable meets requirements and at no additional cost to the Owner.

6. Submit testing results for review and approval.

3.05 CONTRACT CLOSEOUT:

A. Provide in accordance with Section 01700.

END OF SECTION

Geotechnical Report

02

AECOM Imagine it. Delivered.

To: J. Laurila, B. Stoops, F., Zabaneh, Springfield Water and Sewer Commission

From: W. Song/K. Harten, AECOM

Date: November 10, 2022

Subject: **Geotechnical Data Report (GDR)**
Work Order 20A-18: Geotechnical Exploration Work at the WPF for the EDV Building and Connecting Pipelines

Cc: R. Pogodzienski, C. Costello, B. Soule, AECOM

1.1 PROJECT DESCRIPTION

AECOM Technical Services Inc. (AECOM) performed a geotechnical investigation to support the design and construction of an Energy Dissipation Valves (EDV) and Equalization Tank Facility Building and associated new connection pipeline at the SWSC West Parish Filter (WPF) Plant on Granville Road in Westfield, Massachusetts.

1.2 PURPOSE OF REPORT

The purpose of this Geotechnical Data Report (GDR) is to provide supporting geotechnical data for the design and construction of the proposed EDV structure and pipeline at the SWSC WPF facility. The geotechnical data provided herein were collected during a subsurface investigation program in September 2021 that involved the drilling of seven (7) test borings, the installation of two (2) observation wells and the laboratory testing of select soil and rock samples. The test borings were drilled at the site of the proposed EDV facility building and along the proposed interconnecting pipeline route.

1.3 SUBSURFACE INVESTIGATION

The subsurface investigation at the WPF site was conducted from September 20 to September 27, 2021. The investigation consisted of drilling seven (7) test borings (B21-1 to B21-7) and converting two of the test borings into observation wells. The test borings ranged in depths from 7.5 to 30 feet.
The drilling was performed by Northern Drill Services of Northborough, Massachusetts. Samples and rock cores collected during the drilling effort were logged by an AECOM representative.

1.3.1 Drilling and Sampling

Utility clearing efforts at the site included a utility mark-out by plant personnel and upper borehole vacuum excavation. Borehole vacuum excavation efforts were typically terminated at seven feet or when shallow bedrock or groundwater was encountered.

Test borings were drilled using 4-inch HW steel casing using drive and wash rotary methods. Standard penetration test (SPT) split-spoon soil sampling was routinely done at 5-foot intervals. Each soil sample was logged by an AECOM representative in accordance with ASTM D2488.

Bedrock was typically cored in 5-foot lengths when encountered. Bedrock was encountered in all the investigation test borings.

The boring locations are shown on the attached figures. The test boring logs from the subsurface investigation are provided in Attachment 1.

1.3.2 Groundwater Monitoring

Two test borings at the proposed EDV facility building site (B21-2 and B21-3) were converted to observation wells. The well installation logs for B21-2 and B21-3 are provided in Attachment 1.

Groundwater levels at each boring location, excluding B21-2 and B21-3, were estimated at the time of drilling and recorded on the boring logs. Water levels measured in the B21-2 and B21-3 observation wells were recorded on both the boring and well installation logs. Subsequent well readings are provided in Table 1 below.

Table 1: Summary of Observation Well Readings

Well No.	Date	Depth to Water Level	Water Level El.
B21-2	Nov. 9, 2021	31.75”	495.2’
B21-3	Nov. 9, 2021	46”	496.8’

1.3.3 Geotechnical Laboratory Testing

Select soil and rock samples were submitted as part of the investigation to determine their physical and strength properties. Three rock core samples were submitted for unconfined compressive strength testing and three site soil samples were submitted for gradation analysis. The soil and rock samples were tested by GeoTesting Express of Acton, Massachusetts.

A summary of the soil and rock laboratory testing is provided in Table 2. The laboratory test results are provided in Attachment 2.

Table 2: Summary of Geotechnical Laboratory Testing

Boring ID	Sample ID	Depth (FT.)	Media	Lab Test
B21-3	SS-1	9 - 11	Soil	Sieve & Hydrometer (ASTM D6913 & D7928)
B21-4	SS-1	5 – 7	Soil	Sieve & Hydrometer (ASTM D6913 & D7928)
B21-5	SS-1	5 – 7	Soil	Sieve (ASTM D6913)
B21-1	R-1	16.1 – 16.7	Rock	Unconfined Compression (ASTM D7012C)
B21-2	R-1	16 - 17	Rock	Unconfined Compression (ASTM D7012C)
B21-4	R-1	14.3 – 14.9	Rock	Unconfined Compression (ASTM D7012C)

1.4 EXISTING SUBSURFACE INFORMATION

A previous subsurface investigation program was performed by New England Boring Contractors of Glastonbury, CT under the supervision of CDM Smith. The drilling was conducted in March, 2017. The relevant boring location plan and associated boring logs are provided in Attachment 3.

1.5 REPORT LIMITATIONS

Ground conditions at and beyond a borehole's location may change over time as a result of construction activity. Groundwater levels fluctuate with precipitation, seasonality, construction activities, run-off controls, and other hydraulic factors. As a result, ground conditions and water levels during construction may vary from those observed and reported in this Geotechnical Data Report.

1.6 REFERENCES

ASTM D1586-11, "Standard Test Method for Standard Penetration Test (SPT) and Split-Barrel sampling of Soils." ASTM International, West Conshohocken, PA, 2011, www.astm.org.

ASTM D2487-11, "Standard Practice for Classification of Soils for Engineering Purposes (Unified Soil Classification System)." ASTM International, West Conshohocken, PA, 2011, www.astm.org.

ASTM D2488-09a, "Standard Practice for Description and Identification of Soils (Visual-Manual Procedure)." ASTM International, West Conshohocken, PA, 2009, www.astm.org.

ASTM D6913-17, "Standard Test Methods for Particle-Size Distribution (Gradation) of Soils Using Sieve Analysis", ASTM International, West Conshohocken, PA, 2017, www.astm.org.

ASTM D7012-14, “Standard Test Methods for Compressive Strength and Elastic Moduli of Intact Rock Core Specimens under Varying States of Stress and Temperatures”, ASTM International, West Conshohocken, PA, 2014, www.astm.org.

ASTM D7928-21, “Standard Test Method for Particle-Size Distribution (Gradation) of Fine-Grained Soils Using the Sedimentation (Hydrometer) Analysis” , ASTM International, West Conshohocken, PA, 2021, www.astm.org.

SWSC Hydropower Facility Building Boring Location Plan (1/2)

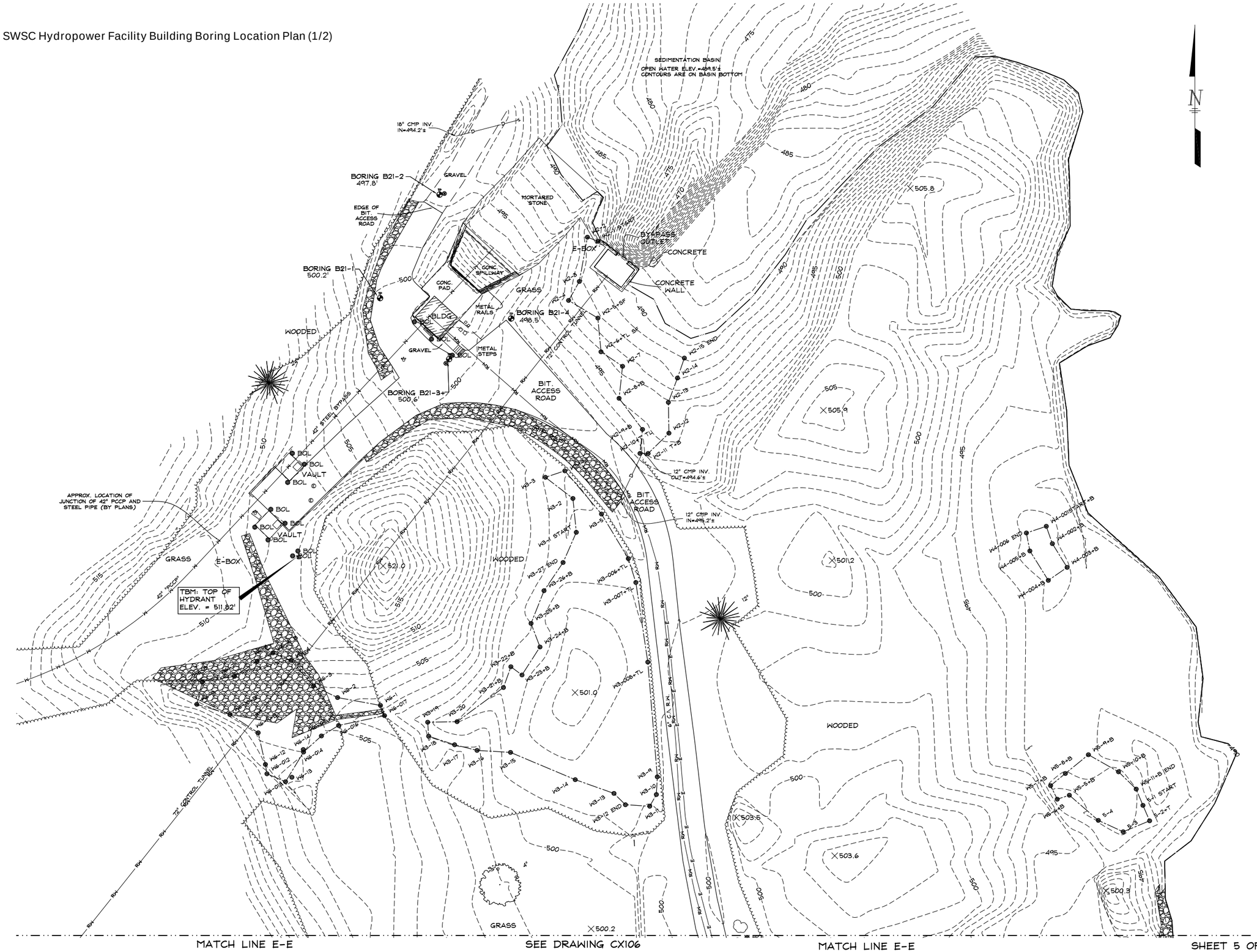

Hill engineers architects planners
50 Depot Street
Dalton, MA 01226
(413) 684-0925
44 Spring Street
Adams, MA 01220
(413) 743-0013
www.hillengineers.com

REV.	DESCRIPTION	DR'N	CK'D.	DATE
A	ISSUED FOR REVIEW AND COMMENT	MAC		9-20-21
B	ADDED BORING LOCATIONS	MAC		11-3-21

A COPY OF THE DATA IN THIS DRAWING FILE IS MAINTAINED AT THE OFFICES OF HILL ENGINEERS ARCHITECTS, PLANNERS, INC. THE INTERPRETATION, APPLICATION AND REVISION OF THIS DATA IS THE SOLE RESPONSIBILITY OF THE USER.

AECOM
250 APOLLO DRIVE
CHELMSFORD, MA 01824

PROJECT DESCRIPTION: WEST PARISH FILTERS WATER TREATMENT PLANT WESTFIELD, MA

DRAWING TITLE: EXISTING CONDITIONS SITE PLAN

DRAWN BY	SJT
DATE DRAWN	1-9-2020
SCALE	1" = 20'
APV'D BY	

CAD CODE: SRV-2245-03CX101M.DWG

GRAPHIC SCALE: 0 20 40

PROJECT NUMBER: SRV-2245-003

DRAWING NUMBER	REV.
CX105	B

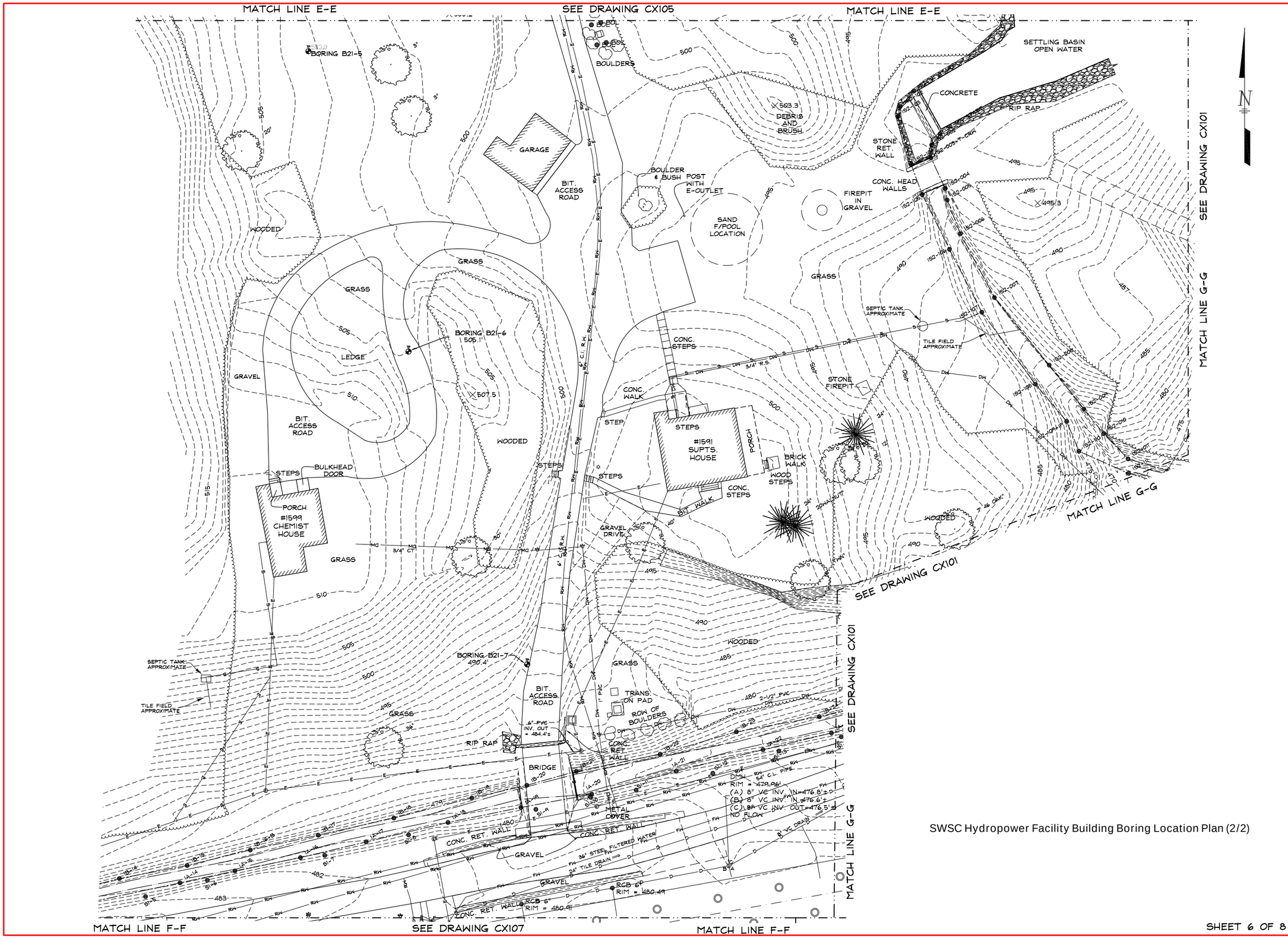

SWSC Hydropower Facility Building Boring Location Plan (2/2)

SHEET 6 OF 8

Hill engineers architects planners
50 Depot Street
Dalton, MA 01226
(413) 684-0925
44 Spring Street
Adams, MA 01220
(413) 743-0013
www.hillengineers.com

REV.	DESCRIPTION	DR'N	CK'D.	DATE
A	ISSUED FOR REVIEW AND COMMENT	MAC		9-20-21
B	ADDED BORING LOCATIONS	MAC		11-3-21

A COPY OF THE DATA IN THIS DRAWING FILE IS MAINTAINED AT THE OFFICES OF HILL ENGINEERS ARCHITECTS, PLANNERS, INC. THE INTERPRETATION, APPLICATION AND REVISION OF THIS DATA IS THE SOLE RESPONSIBILITY OF THE USER.

AECOM
250 APOLLO DRIVE
CHELMSFORD, MA 01824

DRAWING TITLE
EXISTING CONDITIONS SITE PLAN

PROJECT DESCRIPTION
WEST PARISH FILTERS WATER TREATMENT PLANT WESTFIELD, MA

DRAWN BY	SJT
DATE DRAWN	1-9-2020
SCALE	1" = 20'
APV'D BY	

CAD CODE: SRV-2245-03CX101M.DWG

GRAPHIC SCALE: 0 20 40

PROJECT NUMBER: SRV-2245-003

DRAWING NUMBER	REV.
CX106	B

ATTACHMENT 1

Test Boring & Well Installation Logs
(AECOM, September 2021)

Exploration Location

NORTHING: _____ **EASTING:** _____ **STATION:** _____ **OFFSET:** _____

HORIZONTAL DATUM: _____ **INCLINATION FROM VERTICAL:** 0

VERTICAL DATUM: City of Springfield **GROUND SURFACE ELEV. (FT):** 500.2

LOCATION: SWSC WPF Westfield, MA **ESTIMATED/SURVEYED?:** Surveyed

SOIL LOG

B21-1

Drilling Information

DATE START / END: 9/20/2021 - 9/22/2021 **TOTAL DEPTH (FT):** 24.0

CONTRACTOR: Northern Drilling Services **DRILLER:** C. Beirholm **LOGGED BY:** K. Harten

EQUIPMENT: Mobile Drill B-57 **EXPLORATION TYPE/METHOD:** HW Steel Casing - Drive & Wash

AUGER ID/OD: N/A **CASING ID/OD:** 4"/4.5" **CORE INFORMATION** NX core

HAMMER TYPE: Auto-hammer **HAMMER WEIGHT (lbs):** 140 **HAMMER DROP (inch):** 30

WATER LEVEL DEPTHS (ft): Estimated @ 5 ft. below grade at time of drilling

GENERAL NOTES: Boring backfilled with cuttings and peastone after completion.

ABBREVIATIONS:
ID = Inside Diameter; OD = Outside Diameter; Pen. = Penetration Length; Rec. = Recovery Length
bpf = Blows per Foot; mpf = Minute per Foot; S = Sample
ST = Undisturbed Tube Sample; RC = Rock Core; FVS = Field Vane Shear; SC = Sonic Core
WOR = Weight of Rods; WOH = Weight of Hammer; RQD = Rock Quality Designation; PID = Photoionization Detector
Q_p = Pocket Penetrometer Strength; S_v = Pocket Torvane Shear Strength; F_v = Field Vane Shear Strength; NA, NM = Not Applicable, Not Measured

Depth (ft)	Elev. (ft)	Casing Pen. (bpf) or Core Rate (mpf)	SAMPLE INFORMATION: Sample No.	Type	Depth (ft)	Pen./ Rec. (in)	Blows Count or RQD	Lab Testing	GRAPHIC LOG	Sample Description & Classification	H_2O Depth	Remarks
	500		G-1		0.5 to 4	42				~6" of Bituminous Concrete Pavement Poorly Graded Sand with Silt (SP-SM) - brown, fine to coarse grained, few fine to coarse gravel, few fines, few cobbles/boulders; moist		Utility clear by vactor to 7 ft. (offset 5' after encountering boulder; grounding cable encountered at edge of offset location)
5	495		G-2		4 to 7	36				Silty Sand with Gravel (SM) - brown, large boulder and rock fragments in borehole	▽	
										(Possible Weathered Bedrock)		Rock (or boulder) encountered @ 7 ft.; roller bit drill to 9 ft.
10	490		SS-1		9 to 9.08	1/0	60/<1"			No Recovery		Roller bit drill 9 to 14 ft.; observed flakes of Mica Schist in wash water
15	485		R-1		14 to 19	60/56	RQD = 40%	Tested for Unconfined Compression		Gray, hard to moderately hard, slightly weathered MICA SCHIST - well foliated, moderate to high angle close jointing, few very thin calcite stringers, contains several garnet crystals, occasional thin quartz seams		
20	480		R-2		19 to 24	60/46	RQD = 60%			Top 12" - MICA SCHIST, as above Dark Gray, hard to very hard, fresh to slightly weathered, medium grained SCHIST - poorly foliated, low to moderate angle moderately spaced jointing, several garnet crystals, higher quartz percentage than above, occasional very thin calcite stringers, approx. 6" of core is chlorite stained; RQD likely low due to a piece of unrecovered core		
										End of Boring at 24 feet		

Stratification lines represent approximate boundary between soil types, transitions may be gradual. Water level readings have been made at times and under conditions stated. Fluctuations of groundwater may occur due to other factors than those present at the time measurements were made.

LOGGED BY (Consultant): AECOM

PROJECT NAME: SWSC Hydropower Facility Building

CITY/STATE: Westfield, CT

AECOM PROJECT NUMBER: 60662775.18

AECOM

MDC CLEAN WATER PROJECT TB-REV SWSC GINT LOGS 2021.10.06.GPJ AECOM.GDT 11/10/21

Exploration Location

NORTHING: _____ **EASTING:** _____ **STATION:** _____ **OFFSET:** _____

HORIZONTAL DATUM: _____ **INCLINATION FROM VERTICAL:** 0

VERTICAL DATUM: City of Springfield **GROUND SURFACE ELEV. (FT):** 497.8

LOCATION: SWSC WPF Westfield, MA **ESTIMATED/SURVEYED?:** Surveyed

SOIL LOG

B21-2

Drilling Information

DATE START / END: 9/20/2021 - 9/21/2021 **TOTAL DEPTH (FT):** 19.5

CONTRACTOR: Northern Drilling Services **DRILLER:** C. Beirholm **LOGGED BY:** K. Harten

EQUIPMENT: Mobile Drill B-57 **EXPLORATION TYPE/METHOD:** HW Steel Casing - Drive & Wash

AUGER ID/OD: N/A **CASING ID/OD:** 4"/4.5" **CORE INFORMATION** NX core

HAMMER TYPE: Auto-hammer **HAMMER WEIGHT (lbs):** 140 **HAMMER DROP (inch):** 30

WATER LEVEL DEPTHS (ft): Measured @ 2.88' on 9/24

GENERAL NOTES: Boring converted to a 19.33' deep observation well.

ABBREVIATIONS:
ID = Inside Diameter; OD = Outside Diameter; Pen. = Penetration Length; Rec. = Recovery Length
bpf = Blows per Foot; mpf = Minute per Foot; S = Sample
ST = Undisturbed Tube Sample; RC = Rock Core; FVS = Field Vane Shear; SC = Sonic Core
WOR = Weight of Rods; WOH = Weight of Hammer; RQD = Rock Quality Designation; PID = Photoionization Detector
Q_p = Pocket Penetrometer Strength; S_v = Pocket Torvane Shear Strength; F_v = Field Vane Shear Strength; NA, NM = Not Applicable, Not Measured

Depth (ft)	Elev. (ft)	Casing Pen. (bpf) or Core Rate (mpf)	Sample No.	Type	Depth (ft)	Pen./ Rec. (in)	Blows Count or RQD	Lab Testing	GRAPHIC LOG	Sample Description & Classification	H_2O Depth	Remarks
0	497.8		G-1		0.5 to 4	42				Poorly Graded Sand with Silt and Gravel (SP-SM) - brownish gray, fine to coarse grained sand, little fine to coarse gravel, few fines; dry to wet	▽	Utility clear by vactor to 5 ft. and air knife to 7 ft.
5	495		G-2		4 to 7	36				Silty Sand (SM) - brown, fine to crs grained sand, little fines, few fine to coarse gravel; wet		
10	490		SS-1		8.83 to 8.91	1/1	50/1"			(Weathered/Decomposed Schist) Brown gray Silty Rock Fragments (decomposed Schist)		Casing refusal @ 9 ft.
15	485		SS-2 R-1		14 to 14.08 14.1 to 19.1	1/1 60/56	100/1" RQD = 70%	Tested for Unconfined Compression		Spoon contains gray decomposed/pulverized Schist Top 24' - Gray, hard, slightly to moderately weathered MICA SCHIST - well foliated, moderate angle jointing, contains several garnets Bottom 32" - Gray, very hard to hard, slightly to fresh weathered, fine to medium grained GNEISS (or possible a poorly bedded Quartz Schist) - low angle foliation and jointing, few quartz seams to 1.5" thick, occasional very thin calcite stringers		Rock noticeably harder @ ~16.5 ft.
20	480									End of Boring at 19.5 feet		
	475											

Stratification lines represent approximate boundary between soil types, transitions may be gradual. Water level readings have been made at times and under conditions stated. Fluctuations of groundwater may occur due to other factors than those present at the time measurements were made.

LOGGED BY (Consultant): AECOM

PROJECT NAME: SWSC Hydropower Facility Building

CITY/STATE: Westfield, CT

AECOM PROJECT NUMBER: 60662775.18

AECOM

MDC CLEAN WATER PROJECT TB-REV SWSC GINT LOGS 2021.10.06.GPJ AECOM.GDT 11/10/21

Exploration Location

NORTHING: _____ **EASTING:** _____ **STATION:** _____ **OFFSET:** _____

HORIZONTAL DATUM: _____ **INCLINATION FROM VERTICAL:** 0

VERTICAL DATUM: City of Springfield **GROUND SURFACE ELEV. (FT):** 500.6

LOCATION: SWSC WPF Westfield, MA **ESTIMATED/SURVEYED?:** Surveyed

SOIL LOG

B21-3

Drilling Information

DATE START / END: 9/20/2021 - 9/23/2021 **TOTAL DEPTH (FT):** 30.0

CONTRACTOR: Northern Drilling Services **DRILLER:** C. Beirholm **LOGGED BY:** K. Harten

EQUIPMENT: Mobile Drill B-57 **EXPLORATION TYPE/METHOD:** HW Steel Casing - Drive & Wash

AUGER ID/OD: N/A **CASING ID/OD:** 4"/4.5" **CORE INFORMATION** NX core

HAMMER TYPE: Auto-hammer **HAMMER WEIGHT (lbs):** 140 **HAMMER DROP (inch):** 30

WATER LEVEL DEPTHS (ft): Measured @ 4.25' on 9/24

GENERAL NOTES: Boring converted to a 20.5' deep observation well.

ABBREVIATIONS:
ID = Inside Diameter; OD = Outside Diameter; Pen. = Penetration Length; Rec. = Recovery Length
bpf = Blows per Foot; mpf = Minute per Foot; S = Sample
ST = Undisturbed Tube Sample; RC = Rock Core; FVS = Field Vane Shear; SC = Sonic Core
WOR = Weight of Rods; WOH = Weight of Hammer; RQD = Rock Quality Designation; PID = Photoionization Detector
Q_p = Pocket Penetrometer Strength; S_v = Pocket Torvane Shear Strength; F_v = Field Vane Shear Strength; NA, NM = Not Applicable, Not Measured

Depth (ft)	Elev. (ft)	Casing Pen. (bpf) or Core Rate (mpf)	Sample No.	Type	Depth (ft)	Pen./ Rec. (in)	Blows Count or RQD	Lab Testing	GRAPHIC LOG	Sample Description & Classification	H_20 Depth	Remarks
	500		G-1		0.5 to 4	42				~6" of Bituminous Concrete Pavement		Utility clear by vactor to 5 ft. and air knife to 7 ft.
										Poorly Graded Sand with Silt and Gravel (SP-SM) - brownish gray, fine to coarse sand, little fine to coarse gravel, few fines; moist		
			G-2		4 to 7	36				Poorly Graded Sand with Silt and Gravel (SP-SM), as above - wet to moist	▽	
5	495											
			SS-1		9 to 11	24/7	9-7-5-5	Tested for Sieve & Hydrometer		Poorly Graded Sand with Silt and Gravel (SP-SM) - gray brown, fine to coarse sand, some fine to coarse gravel, few to little fines; wet		
10	490											Flakes of mica in drill wash @ 12.5 ft.
			SS-2		14 to 14.75	9/5	52-60/3"			Broken Gravel/Rock Fragments set in a brown, silty fine to coarse sand matrix (GP/GM)		SS-2 fragments don't appear to be mica schist HW Casing refusal @ 15 ft.
15	485											
			SS-3		19 to 19	0/0	60/0"			No Recovery - spoon contains 3" of granular wash		
20	480		R-1		20 to 25	60/52	RQD = 33%			Gray, hard to medium hard, fresh to slightly weathered MICA SCHIST - well bedded, low to moderate angle close to moderately close jointing/fractures, several garnet crystals in top 18", few to occasional quartz seams to 1" thickness, occasional chloritic staining; top 18" of core is hard and fresh, bottom of core is medium hard and slightly to moderately weathered		Telescope NW casing to 20 ft.

Stratification lines represent approximate boundary between soil types, transitions may be gradual. Water level readings have been made at times and under conditions stated. Fluctuations of groundwater may occur due to other factors than those present at the time measurements were made.

LOGGED BY (Consultant): AECOM

PROJECT NAME: SWSC Hydropower Facility Building

CITY/STATE: Westfield, CT

AECOM PROJECT NUMBER: 60662775.18

AECOM

MDC CLEAN WATER PROJECT TB-REV SWSC GINT LOGS 2021.10.06.GPJ AECOM.GDT 11/10/21

Exploration Location

NORTHING: _____ **EASTING:** _____ **STATION:** _____ **OFFSET:** _____

HORIZONTAL DATUM: _____ **INCLINATION FROM VERTICAL:** 0

VERTICAL DATUM: City of Springfield **GROUND SURFACE ELEV. (FT):** 500.6

LOCATION: SWSC WPF Westfield, MA **ESTIMATED/SURVEYED?:** Surveyed

SOIL LOG

B21-3

Depth (ft)	Elev. (ft)	Casing Pen. (bpf) or Core Rate (mpf)	SAMPLE INFORMATION: Sample No.	Type	Depth (ft)	Pen./ Rec. (in)	Blows Count or RQD	Lab Testing	GRAPHIC LOG	Sample Description & Classification	H_20 Depth	Remarks
	475		R-2		25 to 30	60/58	RQD = 27%			Top 14": Gray, hard to moderately hard, slightly weathered MICA SCHIST - well bedded, bedding is low to moderate angled with close jointing/fractures, several garnet crystals Middle 16" - Light gray to white, very hard, unbroken, medium grained QUARTZ SCHIST with moderate to low angle bedding Bottom 28" - Gray, medium to very soft, moderately weathered MICA SCHIST - well bedded, very close to close jointing, occasional quartz seams to 1/2", many very thin calcite stringers		
30	470									End of Boring at 30 feet		
35	465											
40	460											
45	455											
50	450											
55	445											

Stratification lines represent approximate boundary between soil types, transitions may be gradual. Water level readings have been made at times and under conditions stated. Fluctuations of groundwater may occur due to other factors than those present at the time measurements were made.

LOGGED BY (Consultant): AECOM

PROJECT NAME: SWSC Hydropower Facility Building

CITY/STATE: Westfield, CT

AECOM PROJECT NUMBER: 60662775.18

AECOM

MDC CLEAN WATER PROJECT TB-REV SWSC GINT LOGS 2021.10.06.GPJ AECOM.GDT 11/10/21

Exploration Location

NORTHING: _____ **EASTING:** _____ **STATION:** _____ **OFFSET:** _____

HORIZONTAL DATUM: _____ **INCLINATION FROM VERTICAL:** 0

VERTICAL DATUM: City of Springfield **GROUND SURFACE ELEV. (FT):** 498.5

LOCATION: SWSC WPF Westfield, MA **ESTIMATED/SURVEYED?:** Surveyed

SOIL LOG

B21-4

Drilling Information

DATE START / END: 9/20/2021 - 9/24/2021 **TOTAL DEPTH (FT):** 22.0

CONTRACTOR: Northern Drilling Services **DRILLER:** C. Beirholm **LOGGED BY:** K. Harten

EQUIPMENT: Mobile Drill B-57 **EXPLORATION TYPE/METHOD:** HW Steel Casing - Drive & Wash

AUGER ID/OD: N/A **CASING ID/OD:** 4"/4.5" **CORE INFORMATION** NX core

HAMMER TYPE: Auto-hammer **HAMMER WEIGHT (lbs):** 140 **HAMMER DROP (inch):** 30

WATER LEVEL DEPTHS (ft): Estimated @ 4 ft. below grade at time of drilling

GENERAL NOTES: Boring backfilled with cuttings and peastone after completion.

ABBREVIATIONS:
ID = Inside Diameter; OD = Outside Diameter; Pen. = Penetration Length; Rec. = Recovery Length
bpf = Blows per Foot; mpf = Minute per Foot; S = Sample
ST = Undisturbed Tube Sample; RC = Rock Core; FVS = Field Vane Shear; SC = Sonic Core
WOR = Weight of Rods; WOH = Weight of Hammer; RQD = Rock Quality Designation; PID = Photoionization Detector
Q_p = Pocket Penetrometer Strength; S_v = Pocket Torvane Shear Strength; F_v = Field Vane Shear Strength; NA, NM = Not Applicable, Not Measured

Depth (ft)	Elev. (ft)	Casing Pen. (bpf) or Core Rate (mpf)	Sample No.	Type	Depth (ft)	Pen./ Rec. (in)	Blows Count or RQD	Lab Testing	GRAPHIC LOG	Sample Description & Classification	H_20 Depth	Remarks
			G-1		0 to 4	48				Poorly graded Sand with Silt and Gravel (SP-SM) - brownish gray, fine to coarse sand, little fine to coarse gravel, few fines; moist to wet		Utility clear by vactor to 5 ft.
	495										▽	
			G-2		4 to 5	12				Poorly graded Sand with Silt and Gravel (SP-SM), as above, wet		
5			SS-1		5 to 7	24/10	4-17-9-9	Tested for Sieve & Hydrometer		Silty Sand with Gravel (SM) - gray brown, fine to coarse grained sand, little to some fine to coarse gravel, little fines, trace organics; wet, low plasticity		
	490											
			SS-2		9 to 9.83	10/5	29-100/4"			Top 1": Silty Gravel with Sand (GM) - brown, fine to coarse gravel, little fine to coarse sand, little fines; wet		
10										Bottom 4": Highly Decomposed Mica Schist		
			R-1		12 to 17	60/60	RQD = 20%	Tested for Unconfined Compression		Gray, hard to medium, slightly to moderately weathered MICA SCHIST - well foliated, low to high angle close jointing, some quartz rich layers to 10" thick, several open linear vugs to 3/8" width and 3" length		
	485											
15												
			R-2		17 to 22	60/60	RQD = 60%			Gray, hard, slightly weathered MICA SCHIST - well foliated, close to wide high angle jointing, several garnet crystals		
	480											
20												
										End of Boring at 22 feet		
	475											

Stratification lines represent approximate boundary between soil types, transitions may be gradual. Water level readings have been made at times and under conditions stated. Fluctuations of groundwater may occur due to other factors than those present at the time measurements were made.

LOGGED BY (Consultant): AECOM

PROJECT NAME: SWSC Hydropower Facility Building

CITY/STATE: Westfield, CT

AECOM PROJECT NUMBER: 60662775.18

AECOM

MDC CLEAN WATER PROJECT TB-REV SWSC GINT LOGS 2021.10.06.GPJ AECOM.GDT 11/10/21

Exploration Location

NORTHING: _____ **EASTING:** _____ **STATION:** _____ **OFFSET:** _____

HORIZONTAL DATUM: _____ **INCLINATION FROM VERTICAL:** 0

VERTICAL DATUM: City of Springfield **GROUND SURFACE ELEV. (FT):** 503.0

LOCATION: SWSC WPF Westfield, MA **ESTIMATED/SURVEYED?:** Surveyed

SOIL LOG

B21-5

Drilling Information

DATE START / END: 9/20/2021 - 9/27/2021 **TOTAL DEPTH (FT):** 14.5

CONTRACTOR: Northern Drilling Services **DRILLER:** C. Beirholm **LOGGED BY:** K. Harten

EQUIPMENT: Mobile Drill B-57 **EXPLORATION TYPE/METHOD:** HW Steel Casing - Drive & Wash

AUGER ID/OD: N/A **CASING ID/OD:** 4"/4.5" **CORE INFORMATION** NX core

HAMMER TYPE: Auto-hammer **HAMMER WEIGHT (lbs):** 140 **HAMMER DROP (inch):** 30

WATER LEVEL DEPTHS (ft): Estimated @ 6 ft. below grade at time of drilling

GENERAL NOTES: Boring backfilled with cuttings and peastone after completion.

ABBREVIATIONS:
ID = Inside Diameter; OD = Outside Diameter; Pen. = Penetration Length; Rec. = Recovery Length
bpf = Blows per Foot; mpf = Minute per Foot; S = Sample
ST = Undisturbed Tube Sample; RC = Rock Core; FVS = Field Vane Shear; SC = Sonic Core
WOR = Weight of Rods; WOH = Weight of Hammer; RQD = Rock Quality Designation; PID = Photoionization Detector
Q_p = Pocket Penetrometer Strength; S_v = Pocket Torvane Shear Strength; F_v = Field Vane Shear Strength; NA, NM = Not Applicable, Not Measured

Depth (ft)	Elev. (ft)	Casing Pen. (bpf) or Core Rate (mpf)	Sample No.	Type	Depth (ft)	Pen./ Rec. (in)	Blows Count or RQD	Lab Testing	GRAPHIC LOG	Sample Description & Classification	H_2O Depth	Remarks
0	500		G-1		0 to 5	60				Silt with Sand (ML/SM) - brown, little to some fine to coarse sand, little fine to coarse gravel, occasional cobbles; moist		Utility clear by vactor to 5 ft.
										(Boulder/Cobble @ ~5 ft.)		
5			SS-1		5 to 7	24/8	9-13-3-6	Tested for Sieve & Hydrometer		Top 2": Silty Gravel with Sand (GM) - fine to coarse grained gravel, fine to coarse grained sand, little fines; damp	▽	Jar the bottom 6" of sample SS-1 only
										Bottom 6": Sandy Clay (CL) - some fine to medium sand, trace organics; moist to wet, low plasticity		
	495									(Cobble or Weathered Rock @ 7.5 ft.)		
10			SS-2		9 to 10.5	18/12	64-43-81			Completely Weathered Rock to a Residual Soil - gray brown, rock clasts & fragments set in fine to coarse sandy silt; wet, till-like matrix, rock fragments in spoon tip		
			SS-3		12 to 12.92	11/8	66-88/5"			Highly Weathered Mica Schist - wet, decomposed, angular, disintegrates with finger pressure, set in a silty matrix		
	490		R-1		13 to 14.5	18/6	RQD = 0%			MICA SCHIST Rock Fragments & Pieces - core barrel jammed due to broken/weathered rock		
15										End of Boring at 14.5 feet		
	485											
20												
	480											

Stratification lines represent approximate boundary between soil types, transitions may be gradual. Water level readings have been made at times and under conditions stated. Fluctuations of groundwater may occur due to other factors than those present at the time measurements were made.

LOGGED BY (Consultant): AECOM

PROJECT NAME: SWSC Hydropower Facility Building

CITY/STATE: Westfield, CT

AECOM PROJECT NUMBER: 60662775.18

AECOM

MDC CLEAN WATER PROJECT TB-REV SWSC GINT LOGS 2021.10.06.GPJ AECOM.GDT 11/10/21

Exploration Location

NORTHING: _____ **EASTING:** _____ **STATION:** _____ **OFFSET:** _____
HORIZONTAL DATUM: _____ **INCLINATION FROM VERTICAL:** 0
VERTICAL DATUM: City of Springfield **GROUND SURFACE ELEV. (FT):** 505.1
LOCATION: SWSC WPF Westfield, MA **ESTIMATED/SURVEYED?:** Surveyed

SOIL LOG

B21-6

Drilling Information

DATE START / END: 9/23/2021 - 9/24/2021 **TOTAL DEPTH (FT):** 15.0
CONTRACTOR: Northern Drilling Services **DRILLER:** C. Beirholm **LOGGED BY:** K. Harten
EQUIPMENT: Mobile Drill B-57 **EXPLORATION TYPE/METHOD:** HW Steel Casing - Drive & Wash
AUGER ID/OD: N/A **CASING ID/OD:** 4"/4.5" **CORE INFORMATION** NX core
HAMMER TYPE: Auto-hammer **HAMMER WEIGHT (lbs):** 140 **HAMMER DROP (inch):** 30
WATER LEVEL DEPTHS (ft): Not encountered above bedrock
GENERAL NOTES: A bedrock outcropping is located 9 ft. west of borehole. Boring backfilled with cuttings and peastone after completion.

ABBREVIATIONS:
ID = Inside Diameter; OD = Outside Diameter; Pen. = Penetration Length; Rec. = Recovery Length
bpf = Blows per Foot; mpf = Minute per Foot; S = Sample
ST = Undisturbed Tube Sample; RC = Rock Core; FVS = Field Vane Shear; SC = Sonic Core
WOR = Weight of Rods; WOH = Weight of Hammer; RQD = Rock Quality Designation; PID = Photoionization Detector
Q_p = Pocket Penetrometer Strength; S_v = Pocket Torvane Shear Strength; F_v = Field Vane Shear Strength; NA, NM = Not Applicable, Not Measured

Depth (ft)	Elev. (ft)	Casing Pen. (bpf) or Core Rate (mpf)	Sample No.	Type	Depth (ft)	Pen./ Rec. (in)	Blows Count or RQD	Lab Testing	GRAPHIC LOG	Sample Description & Classification	H_20 Depth	Remarks
			G-1 G-2		0.5 to 1.5 1 to 4	12 36				5" of Bituminous Concrete Pavement Well Graded Gravel with Silt and Sand (GW-GM) - brown, fine to crs grained gravel, some fine to coarse grained sand, few fines, many cobbles; dry Silt with Sand (ML) - micaceous fines, fine to coarse sand, few fine to coarse gravel, several cobbles, occasional boulders; moist		Utility clear by vactor to 4 ft. (to top of bedrock)
5	500		SS-1		5 to 5.75	9/7	28-80/3"			(Top of Rock observed in vactored hole) Completely Weathered/Decomposed Mica Schist - gray brown		
			SS-2		9 to 9.25	3/3	80/3"			Completely Weathered/Decomposed Mica Schist, as above		
10	495		R-1		10 to 15	60/60	RQD = 20%			Gray, mostly hard, slightly to moderately weathered MICA SCHIST - well foliated, close to moderate jointing, jointing is moderate to high angle, few garnet crystals, quartz-rich in bottom 10" of core		
15	490									End of Boring at 15 feet		
20	485											

Stratification lines represent approximate boundary between soil types, transitions may be gradual. Water level readings have been made at times and under conditions stated. Fluctuations of groundwater may occur due to other factors than those present at the time measurements were made.

LOGGED BY (Consultant): AECOM
PROJECT NAME: SWSC Hydropower Facility Building
CITY/STATE: Westfield, CT
AECOM PROJECT NUMBER: 60662775.18

AECOM

MDC CLEAN WATER PROJECT TB-REV SWSC GINT LOGS 2021.10.06.GPJ AECOM.GDT 11/10/21

Exploration Location

NORTHING: _____ **EASTING:** _____ **STATION:** _____ **OFFSET:** _____

HORIZONTAL DATUM: _____ **INCLINATION FROM VERTICAL:** 0

VERTICAL DATUM: City of Springfield **GROUND SURFACE ELEV. (FT):** 490.4

LOCATION: SWSC WPF Westfield, MA **ESTIMATED/SURVEYED?:** Surveyed

SOIL LOG

B21-7

Drilling Information

DATE START / END: 9/23/2021 - 9/27/2021 **TOTAL DEPTH (FT):** 7.5

CONTRACTOR: Northern Drilling Services **DRILLER:** C. Beirholm **LOGGED BY:** K. Harten

EQUIPMENT: Mobile Drill B-57 **EXPLORATION TYPE/METHOD:** HW Steel Casing - Drive & Wash

AUGER ID/OD: N/A **CASING ID/OD:** 4"/4.5" **CORE INFORMATION** NX core

HAMMER TYPE: Auto-hammer **HAMMER WEIGHT (lbs):** 140 **HAMMER DROP (inch):** 30

WATER LEVEL DEPTHS (ft): Not encountered above bedrock

GENERAL NOTES: Several small bedrock outcrops are within 15 ft. of borehole. Boring backfilled with cuttings and peastone after completion.

ABBREVIATIONS:
ID = Inside Diameter; OD = Outside Diameter; Pen. = Penetration Length; Rec. = Recovery Length
bpf = Blows per Foot; mpf = Minute per Foot; S = Sample
ST = Undisturbed Tube Sample; RC = Rock Core; FVS = Field Vane Shear; SC = Sonic Core
WOR = Weight of Rods; WOH = Weight of Hammer; RQD = Rock Quality Designation; PID = Photoionization Detector
Q_p = Pocket Penetrometer Strength; S_v = Pocket Torvane Shear Strength; F_v = Field Vane Shear Strength
NA, NM = Not Applicable, Not Measured

Depth (ft)	Elev. (ft)	Casing Pen. (bpf) or Core Rate (mpf)	SAMPLE INFORMATION: Sample No.	Type	Depth (ft)	Pen./ Rec. (in)	Blows Count or RQD	Lab Testing	GRAPHIC LOG	Sample Description & Classification	H_20 Depth	Remarks
	490		G-1		0 to 1.67	20				Sand with Silt and Gravel (SP-SM) - fine to coarse grained sand, some fine to coarse grained gravel, few fines, few cobbles; dry		Utility clear by vactor to 1.67 ft. (to top of bedrock)
			R-1		2.5 to 7.5	60/58	RQD = 43%			Dark gray, hard, slightly weathered, fine to medium grained SCHIST - well foliated, ~30 to 45 deg. bedding, low to high angle jointing, few quartz seams to 1" thick, several open linear vugs to 3/8" width and 5" length		Roller bit drill to 2.5 ft.
5	485											
										End of Boring at 7.5 feet		
10	480											
15	475											
20	470											

Stratification lines represent approximate boundary between soil types, transitions may be gradual. Water level readings have been made at times and under conditions stated. Fluctuations of groundwater may occur due to other factors than those present at the time measurements were made.

LOGGED BY (Consultant): AECOM
PROJECT NAME: SWSC Hydropower Facility Building
CITY/STATE: Westfield, CT
AECOM PROJECT NUMBER: 60662775.18

AECOM

MDC CLEAN WATER PROJECT TB-REV SWSC GINT LOGS 2021.10.06.GPJ AECOM.GDT 11/10/21

WELL INSTALLATION LOG

PROJECT:	JOB NO.	WELL NO.
SWSC Hydropower Facility & Pipeline	**60662775.18**	**B21-2**
DRILLING CONTRACTOR: Northern Drilling Services	COORDINATES: N: E:	
BEGUN: September 21, 2021	GEO./ENG.: Kevin Harten	WATER LEVEL (Depth)
FINISHED: September 21, 2021	DRILLER: Carl Beirholm	2.88 ft. Below Grade (measured 9/24/21)

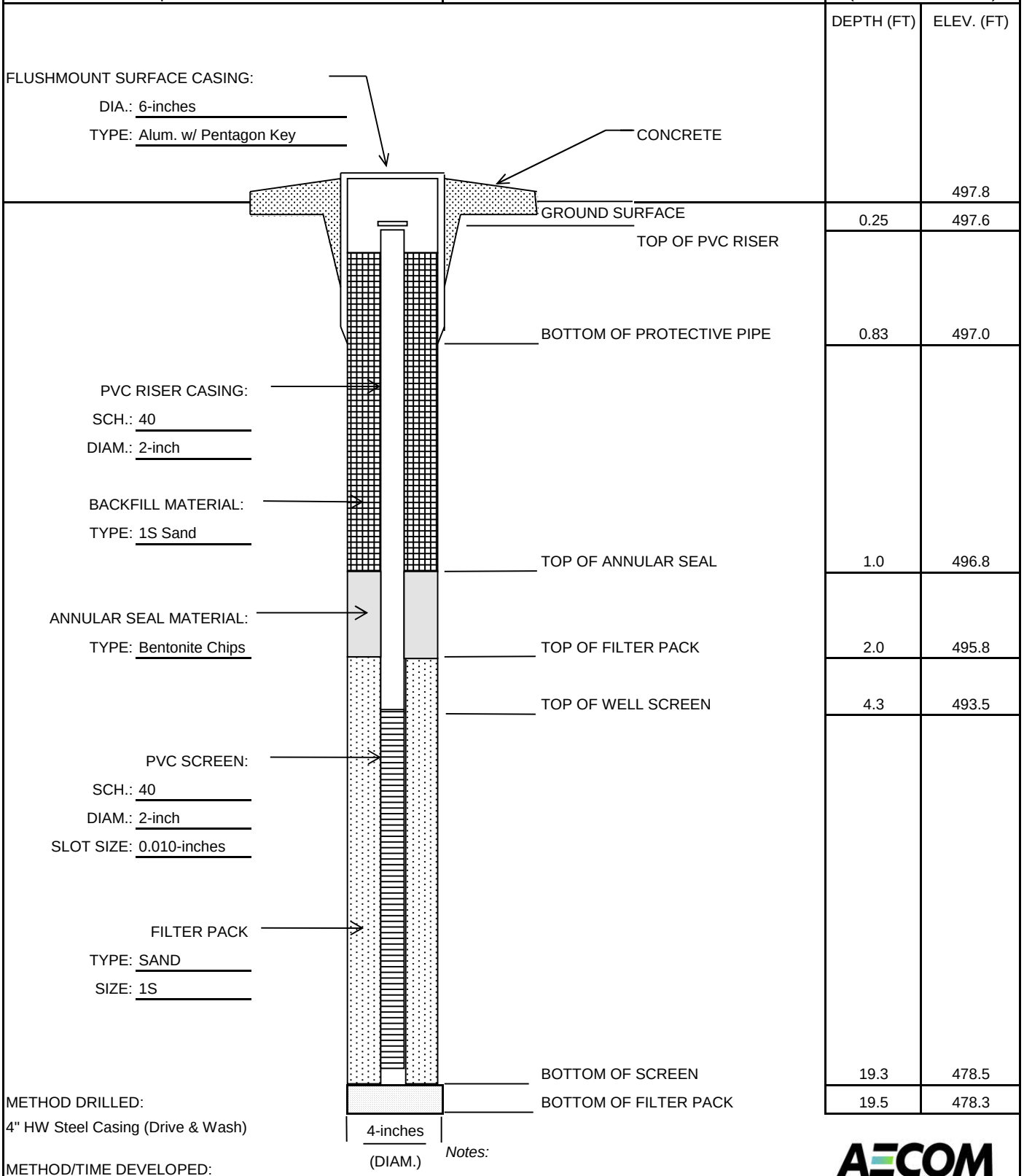

	DEPTH (FT)	ELEV. (FT)
		497.8
GROUND SURFACE	0.25	497.6
TOP OF PVC RISER		
BOTTOM OF PROTECTIVE PIPE	0.83	497.0
TOP OF ANNULAR SEAL	1.0	496.8
TOP OF FILTER PACK	2.0	495.8
TOP OF WELL SCREEN	4.3	493.5
BOTTOM OF SCREEN	19.3	478.5
BOTTOM OF FILTER PACK	19.5	478.3

METHOD DRILLED:
4" HW Steel Casing (Drive & Wash)

METHOD/TIME DEVELOPED:

Notes:

AECOM

WELL INSTALLATION LOG

PROJECT:	JOB NO.	WELL NO.
SWSC Hydropower Facility & Pipeline	**60662775.18**	**B21-3**
DRILLING CONTRACTOR: Northern Drilling Services	COORDINATES: N: E:	
BEGUN: September 23, 2021	GEO./ENG.: Kevin Harten	WATER LEVEL (Depth)
FINISHED: September 23, 2021	DRILLER: Carl Beirholm	4.25 ft. Below Grade (measured 9/24/21)

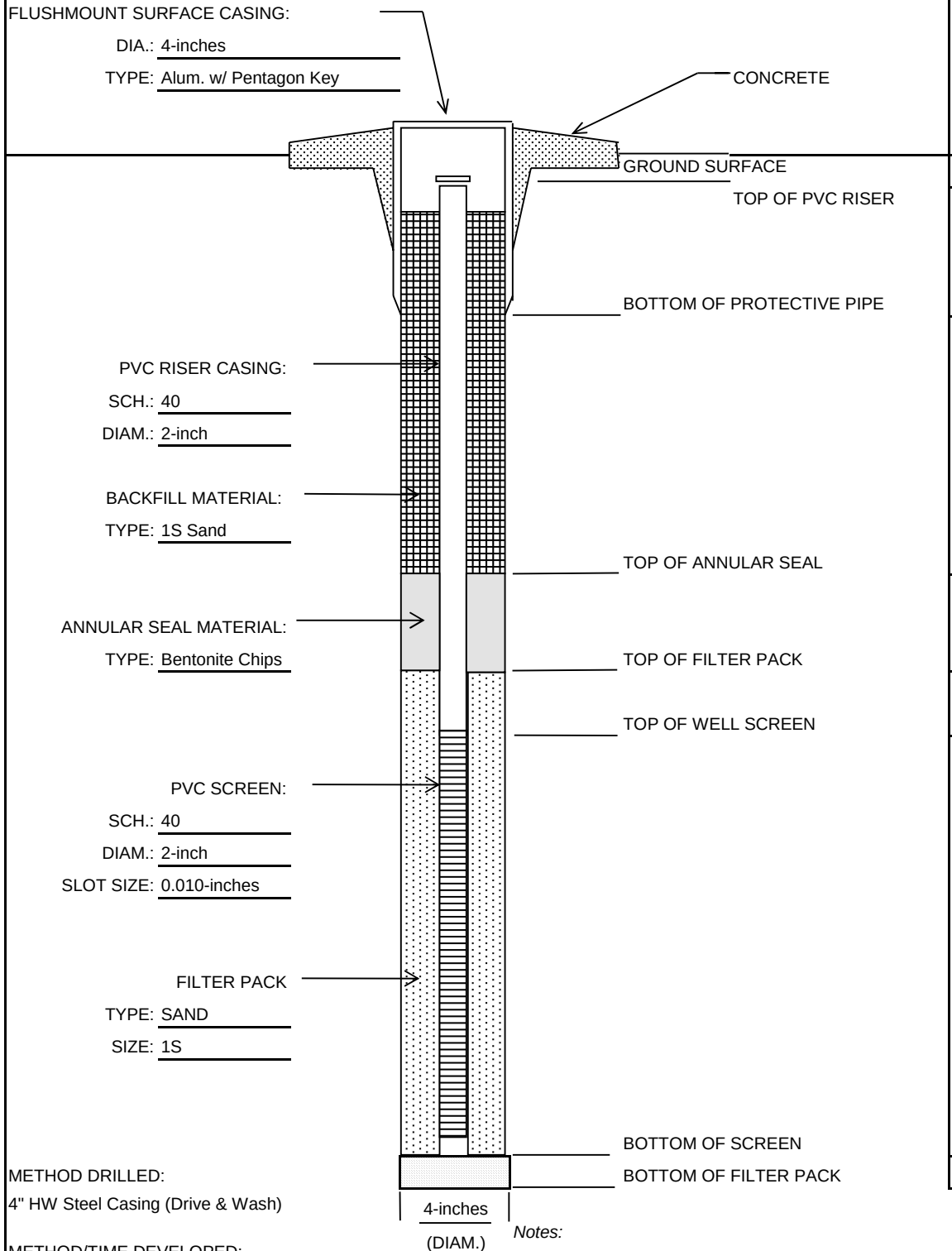

	DEPTH (FT)	ELEV. (FT)
		500.6
GROUND SURFACE	0.29	500.3
TOP OF PVC RISER		
BOTTOM OF PROTECTIVE PIPE	0.83	499.8
TOP OF ANNULAR SEAL	2.0	498.6
TOP OF FILTER PACK	3.0	497.6
TOP OF WELL SCREEN	5.5	495.1
BOTTOM OF SCREEN	20.5	480.1
BOTTOM OF FILTER PACK	30.0	470.6

METHOD DRILLED:
4" HW Steel Casing (Drive & Wash)

METHOD/TIME DEVELOPED:

Notes:

AECOM

ATTACHMENT 2

Geotechnical Laboratory Testing Results
(AECOM, 2021)

GeoTesting EXPRESS

Client:	AECOM				
Project:	SWSC Westfield Hydropower Facility				
Location:	Westfield, MA			Project No:	GTX-314421
Boring ID:	B21-3	Sample Type:	jar	Tested By:	ckg
Sample ID:	SS-1	Test Date:	10/21/21	Checked By:	bfs
Depth :	9-11 ft	Test Id:	633391		
Test Comment:	---				
Visual Description:	Moist, olive dark gray sand with silt and gravel				
Sample Comment:	---				

Particle Size Analysis - ASTM D6913/D7928

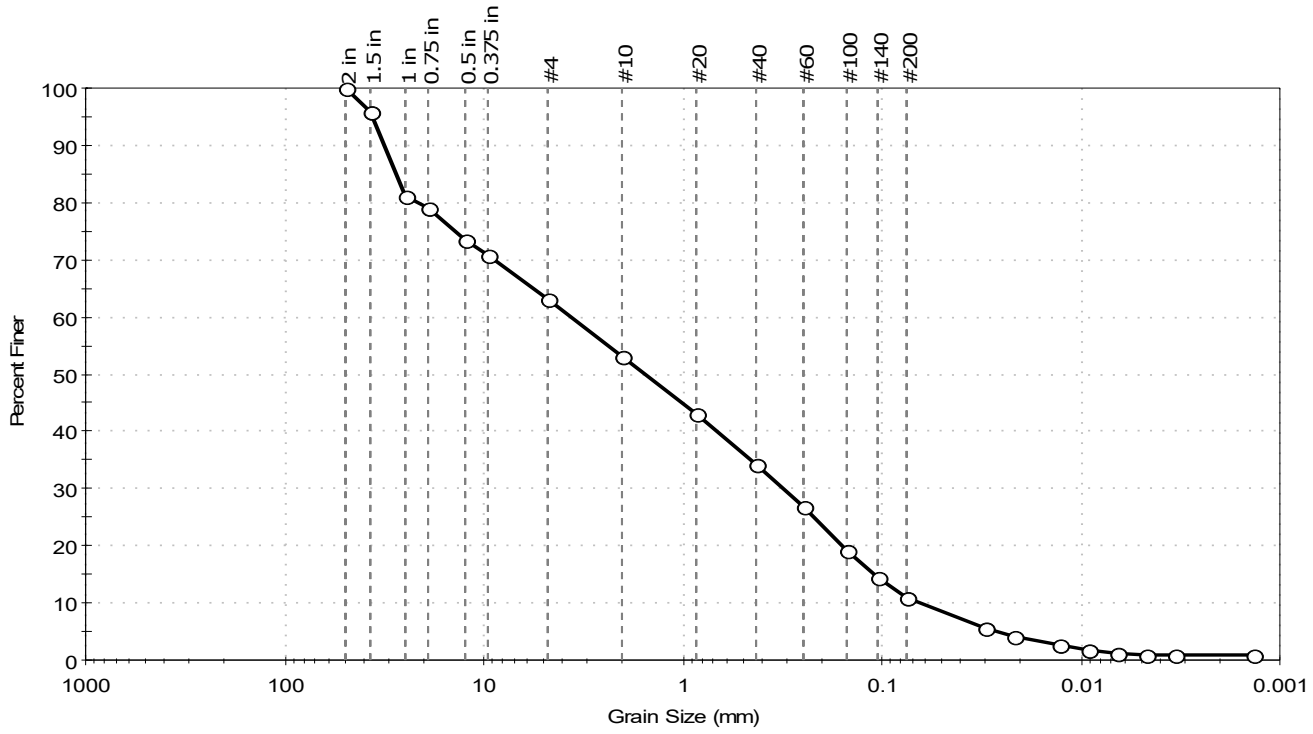

% Cobble	% Gravel	% Sand	% Silt & Clay Size
—	36.9	52.3	10.8

Sieve Name	Sieve Size, mm	Percent Finer	Spec. Percent	Complies
2 in	50.00	100		
1.5 in	37.50	96		
1 in	25.00	81		
0.75 in	19.00	79		
0.5 in	12.50	74		
0.375 in	9.50	71		
#4	4.75	63		
#10	2.00	53		
#20	0.85	43		
#40	0.42	34		
#60	0.25	27		
#100	0.15	19		
#140	0.11	14		
#200	0.075	11		
Hydrometer	Particle Size (mm)	Percent Finer	Spec. Percent	Complies
---	0.0302	6		
---	0.0218	4		
---	0.0129	3		
---	0.0093	2		
---	0.0065	1		
---	0.0047	1		
---	0.0033	1		
---	0.0014	1		

Coefficients

D_{85} = 27.8202 mm D_{30} = 0.3122 mm
D_{60} = 3.6441 mm D_{15} = 0.1107 mm
D_{50} = 1.5457 mm D_{10} = 0.0650 mm
C_u = 56.063 C_c = 0.411

Classification

ASTM N/A

AASHTO Stone Fragments, Gravel and Sand (A-1-b (0))

Sample/Test Description

Sand/Gravel Particle Shape : ANGULAR
Sand/Gravel Hardness : HARD
Dispersion Device : Apparatus A - Mech Mixer
Dispersion Period : 1 minute
Est. Specific Gravity : 2.65
Separation of Sample: #200 Sieve

GeoTesting EXPRESS

Client:	AECOM				
Project:	SWSC Westfield Hydropower Facility				
Location:	Westfield, MA			Project No:	GTX-314421
Boring ID:	B21-4	Sample Type:	jar	Tested By:	ckg
Sample ID:	SS-1	Test Date:	10/25/21	Checked By:	bfs
Depth :	5-7 ft	Test Id:	636233		
Test Comment:	---				
Visual Description:	Moist, olive gray silty sand with gravel				
Sample Comment:	---				

Particle Size Analysis - ASTM D6913/D7928

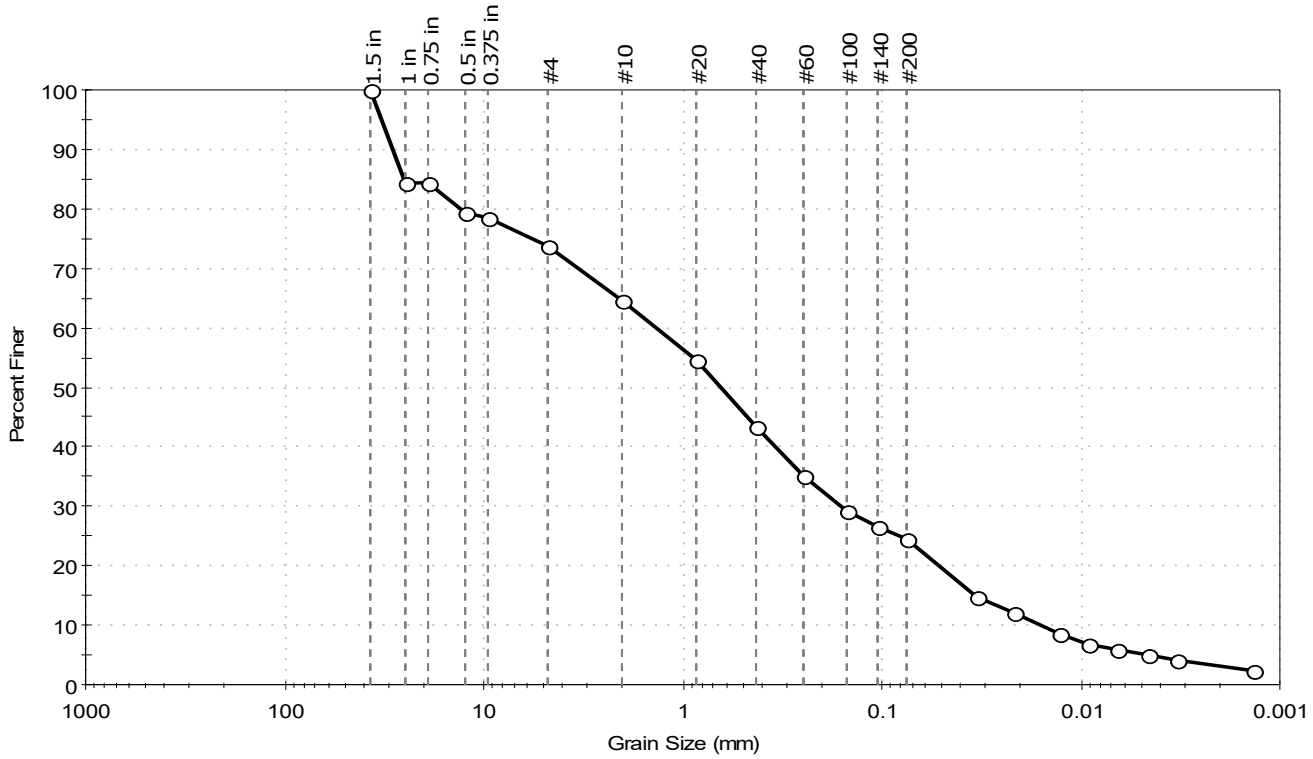

% Cobble	% Gravel	% Sand	% Silt & Clay Size
--	26.4	49.2	24.4

Sieve Name	Sieve Size, mm	Percent Finer	Spec. Percent	Complies
1.5 in	37.50	100		
1 in	25.00	84		
0.75 in	19.00	84		
0.5 in	12.50	79		
0.375 in	9.50	79		
#4	4.75	74		
#10	2.00	65		
#20	0.85	55		
#40	0.42	43		
#60	0.25	35		
#100	0.15	29		
#140	0.11	26		
#200	0.075	24		
Hydrometer	Particle Size (mm)	Percent Finer	Spec. Percent	Complies
---	0.0336	15		
---	0.0217	12		
---	0.0128	9		
---	0.0092	7		
---	0.0065	6		
---	0.0046	5		
---	0.0033	4		
---	0.0014	2		

Coefficients

D_{85} = 25.3441 mm	D_{30} = 0.1611 mm
D_{60} = 1.3500 mm	D_{15} = 0.0342 mm
D_{50} = 0.6409 mm	D_{10} = 0.0159 mm
C_u = 84.906	C_c = 1.209

Classification

ASTM N/A

AASHTO Stone Fragments, Gravel and Sand (A-1-b (0))

Sample/Test Description

Sand/Gravel Particle Shape : ANGULAR

Sand/Gravel Hardness : HARD

Dispersion Device : Apparatus A - Mech Mixer

Dispersion Period : 1 minute

Est. Specific Gravity : 2.65

Separation of Sample: #200 Sieve

Client:	AECOM				
Project:	SWSC Westfield Hydropower Facility				
Location:	Westfield, MA			Project No:	GTX-314421
Boring ID:	B21-5	Sample Type:	jar	Tested By:	ckg
Sample ID:	SS-1	Test Date:	10/20/21	Checked By:	bfs
Depth :	5-7 ft	Test Id:	633393		
Test Comment:	---				
Visual Description:	Moist, dark gray sandy clay				
Sample Comment:	---				

Particle Size Analysis - ASTM D6913

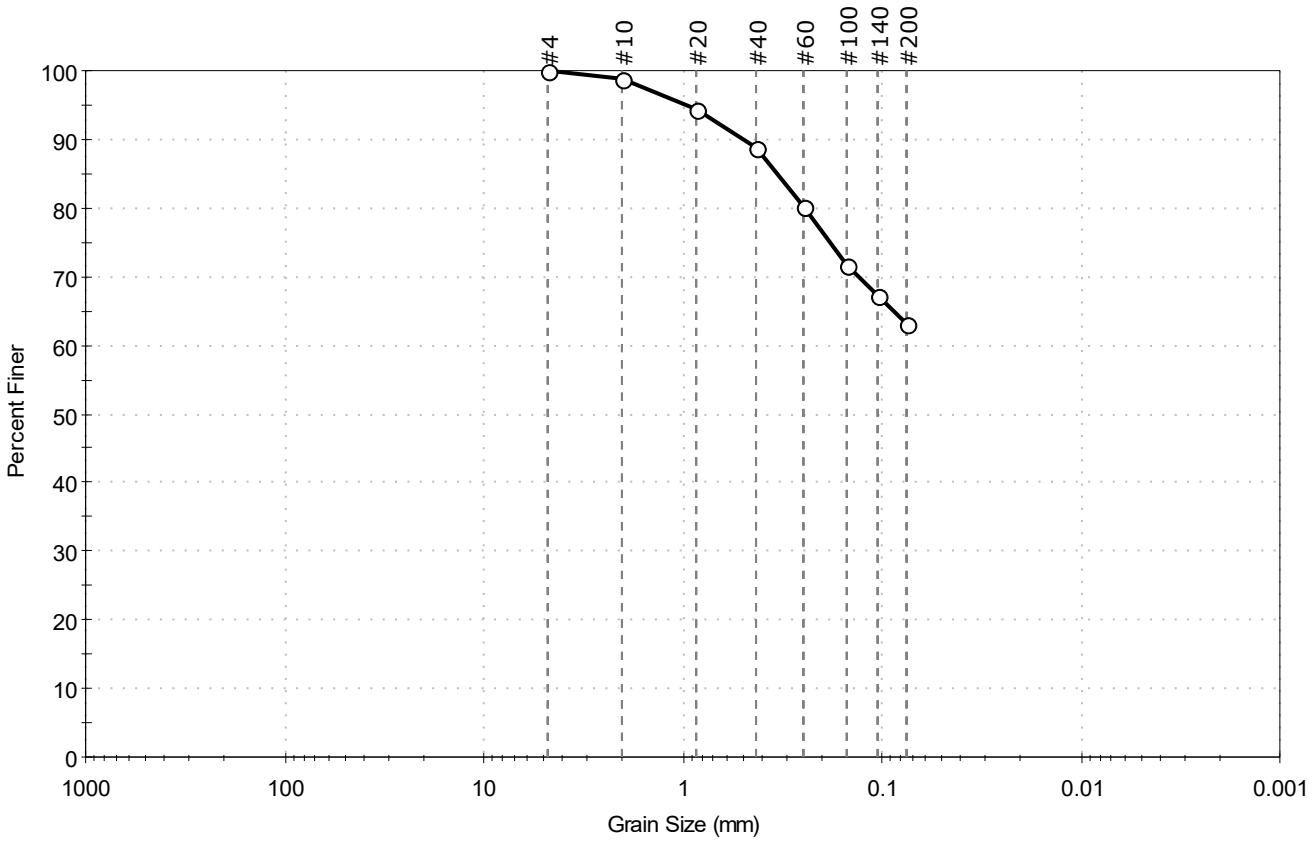

% Cobble	% Gravel	% Sand	% Silt & Clay Size
--	0.0	36.9	63.1

Sieve Name	Sieve Size, mm	Percent Finer	Spec. Percent	Complies
#4	4.75	100		
#10	2.00	99		
#20	0.85	94		
#40	0.42	89		
#60	0.25	80		
#100	0.15	72		
#140	0.11	67		
#200	0.075	63		

Coefficients

D_{85} = 0.3364 mm	D_{30} = N/A
D_{60} = N/A	D_{15} = N/A
D_{50} = N/A	D_{10} = N/A
C_u = N/A	C_c = N/A

Classification

ASTM N/A

AASHTO Silty Soils (A-4 (0))

Sample/Test Description

Sand/Gravel Particle Shape : ---

Sand/Gravel Hardness : ---

Client:	AECOM				
Project:	SWSC Westfield Hydropower Facility				
Location:	Westfield, MA			Project No:	GTX-314421
Boring ID:	---	Sample Type:	---	Tested By:	tlm
Sample ID:	---	Test Date:	10/19/21	Checked By:	smd
Depth :	---	Test Id:	633515		

Bulk Density and Compressive Strength of Rock Core Specimens by ASTM D7012 Method C

Boring ID	Sample Number	Depth	Bulk Density, pcf	Compressive strength, psi	Failure Type	Meets ASTM D4543	Note(s)
B21-1 R-1	B21-1 R-1	16.1-16.7 ft	163	829	2	No	2,*
B21-2 R-1	B21-2 R-1	16-17 ft	169	1958	3	No	2,*
B21-4 R-1	B21-4 R-1	14.3-14.9 ft	169	1046	3	Yes	---

Notes: Density determined on core samples by measuring dimensions and weight and then calculating.

All specimens tested at the approximate as-received moisture content and at standard laboratory temperature.

The axial load was applied continuously at a stress rate that produced failure in a test time between 2 and 15 minutes.

Failure Type: 1 = Intact Material Failure; 2 = Discontinuity Failure; 3 = Intact Material and Discontinuity Failure (See attached photographs)

1: Best effort end preparation. See Tolerance report for details.
2: The as-received core did not meet the ASTM side straightness tolerance due to irregularities in the sample as cored.
3: Specimen L/D < 2.
4: The as-received core did not meet the ASTM minimum diameter tolerance of 1.875 inches.
5: Specimen diameter is less than 10 times maximum particle size.
6: Specimen diameter is less than 6 times maximum particle size.

*Because the indicated tested specimens did not meet the ASTM D4543 standard tolerances, the results reported here may differ from those for a test specimen within tolerances.

Client:	AECOM	Test Date:	10/11/2021
Project Name:	SWSC Westfield Hydropower Facility	Tested By:	ak
Project Location:	Westfield, MA	Checked By:	smd
GTX #:	314421		
Boring ID:	B21-1 R-1		
Sample ID:	B21-1 R-1		
Depth:	16.1-16.7 ft		
Visual Description:	See photographs		

UNIT WEIGHT DETERMINATION AND DIMENSIONAL AND SHAPE TOLERANCES OF ROCK CORE SPECIMENS BY ASTM D4543

BULK DENSITY

	1	2	Average
Specimen Length, in:	4.44	4.43	4.44
Specimen Diameter, in:	1.97	1.97	1.97
Specimen Mass, g:	579.67		
Bulk Density, lb/ft^3	163	**Minimum Diameter Tolerence Met?**	YES
Length to Diameter Ratio:	2.3	**Length to Diameter Ratio Tolerance Met?**	YES

DEVIATION FROM STRAIGHTNESS (Procedure S1)

Maximum gap between side of core and reference surface plate:
Is the maximum gap ≤ 0.02 in.? NO

Maximum difference must be < 0.020 in.
Straightness Tolerance Met? NO

END FLATNESS AND PARALLELISM (Procedure FP1)

END 1	-0.875	-0.750	-0.625	-0.500	-0.375	-0.250	-0.125	0.000	0.125	0.250	0.375	0.500	0.625	0.750	0.875
Diameter 1, in	0.00000	0.00000	0.00000	0.00000	0.00000	0.00000	0.00000	0.00000	0.00000	0.00000	0.00000	0.00000	0.00000	0.00000	0.00000
Diameter 2, in (rotated 90°)	-0.00020	-0.00010	0.00000	0.00000	0.00000	0.00000	0.00000	0.00000	0.00000	0.00000	0.00000	0.00000	0.00000	0.00000	0.00000

Difference between max and min readings, in:
0° = 0.00000 90° = 0.00020

END 2	-0.875	-0.750	-0.625	-0.500	-0.375	-0.250	-0.125	0.000	0.125	0.250	0.375	0.500	0.625	0.750	0.875
Diameter 1, in	0.00000	0.00000	0.00000	0.00000	0.00000	0.00000	0.00000	0.00000	0.00000	0.00000	0.00000	0.00000	0.00000	0.00000	-0.00020
Diameter 2, in (rotated 90°)	0.00010	0.00010	0.00010	0.00000	0.00000	0.00000	0.00000	0.00000	0.00000	0.00000	0.00000	0.00000	0.00000	-0.00010	-0.00020

Difference between max and min readings, in:
0° = 0.0002 90° = 0.0003
Maximum difference must be < 0.0020 in. Difference = ± 0.00015
Flatness Tolerance Met? YES

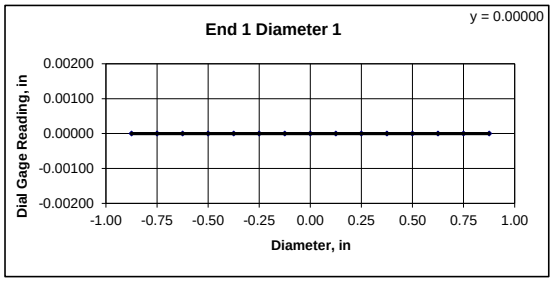

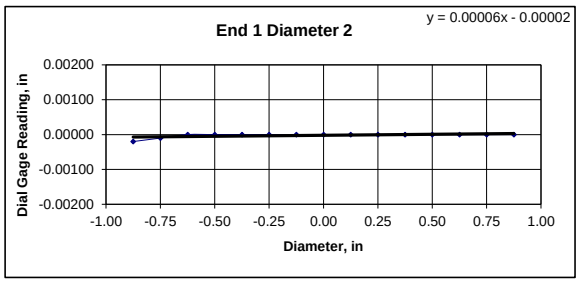

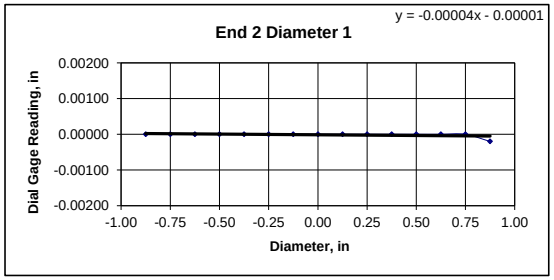

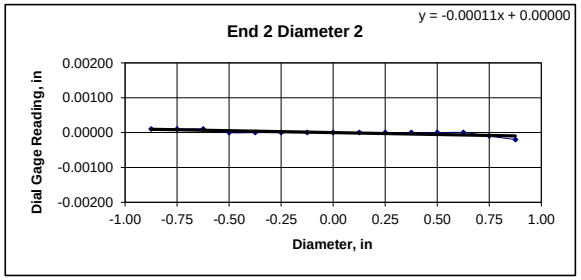

DIAMETER 1

End 1:
Slope of Best Fit Line 0.00000
Angle of Best Fit Line: 0.00000

End 2:
Slope of Best Fit Line 0.00004
Angle of Best Fit Line: 0.00229

Maximum Angular Difference: 0.00229

Parallelism Tolerance Met? YES
Spherically Seated

DIAMETER 2

End 1:
Slope of Best Fit Line 0.00006
Angle of Best Fit Line: 0.00327

End 2:
Slope of Best Fit Line 0.00011
Angle of Best Fit Line: 0.00622

Maximum Angular Difference: 0.00295

Parallelism Tolerance Met? YES
Spherically Seated

PERPENDICULARITY (Procedure P1) (Calculated from End Flatness and Parallelism measurements above)

END 1	Difference, Maximum and Minimum (in.)	Diameter (in.)	Slope	Angle°	Perpendicularity Tolerance Met?
Diameter 1, in	0.00000	1.970	0.00000	0.000	YES
Diameter 2, in (rotated 90°)	0.00020	1.970	0.00010	0.006	YES
END 2					
Diameter 1, in	0.00020	1.970	0.00010	0.006	YES
Diameter 2, in (rotated 90°)	0.00030	1.970	0.00015	0.009	YES

Maximum angle of departure must be ≤ 0.25°
Perpendicularity Tolerance Met? YES

Client:	AECOM
Project Name:	SWSC Westfield Hydropower Facility
Project Location:	Westfield, MA
GTX #:	314421
Test Date:	10/15/2021
Tested By:	kdp
Checked By:	smd
Boring ID:	B21-1 R-1
Sample ID:	B21-1 R-1
Depth, ft:	16.1-16.7 ft

After cutting and grinding

After break

Client:	AECOM	Test Date:	10/11/2021
Project Name:	SWSC Westfield Hydropower Facility	Tested By:	ak
Project Location:	Westfield, MA	Checked By:	smd
GTX #:	314421		
Boring ID:	B21-2 R-1		
Sample ID:	B21-2 R-1		
Depth:	16-17 ft		
Visual Description:	See photographs		

UNIT WEIGHT DETERMINATION AND DIMENSIONAL AND SHAPE TOLERANCES OF ROCK CORE SPECIMENS BY ASTM D4543

BULK DENSITY

	1	2	Average
Specimen Length, in:	4.51	4.53	4.52
Specimen Diameter, in:	1.97	1.97	1.97
Specimen Mass, g:	611.23		
Bulk Density, lb/ft^3	169	**Minimum Diameter Tolerence Met?**	YES
Length to Diameter Ratio:	2.3	**Length to Diameter Ratio Tolerance Met?**	YES

DEVIATION FROM STRAIGHTNESS (Procedure S1)

Maximum gap between side of core and reference surface plate:

Is the maximum gap ≤ 0.02 in.? NO

Maximum difference must be < 0.020 in.

Straightness Tolerance Met? NO

END FLATNESS AND PARALLELISM (Procedure FP1)

END 1	-0.875	-0.750	-0.625	-0.500	-0.375	-0.250	-0.125	0.000	0.125	0.250	0.375	0.500	0.625	0.750	0.875
Diameter 1, in	0.00010	0.00000	0.00000	0.00000	0.00000	0.00000	0.00000	0.00000	0.00000	0.00000	0.00000	0.00000	0.00000	-0.00010	-0.00010
Diameter 2, in (rotated 90°)	0.00000	0.00000	0.00000	0.00000	0.00000	0.00000	0.00000	0.00000	0.00000	0.00000	0.00000	0.00000	0.00000	0.00000	0.00000

Difference between max and min readings, in:

0° = 0.00020 90° = 0.00000

END 2	-0.875	-0.750	-0.625	-0.500	-0.375	-0.250	-0.125	0.000	0.125	0.250	0.375	0.500	0.625	0.750	0.875
Diameter 1, in	0.00010	0.00010	0.00000	0.00000	0.00000	0.00000	0.00000	0.00000	0.00000	0.00000	0.00000	0.00000	0.00000	-0.00020	-0.00020
Diameter 2, in (rotated 90°)	0.00000	0.00000	0.00000	0.00000	0.00000	0.00000	0.00000	0.00000	0.00000	0.00000	0.00000	-0.00010	-0.00010	-0.00010	-0.00010

Difference between max and min readings, in:

0° = 0.0003 90° = 0.0001

Maximum difference must be < 0.0020 in. Difference = ± 0.00015

Flatness Tolerance Met? YES

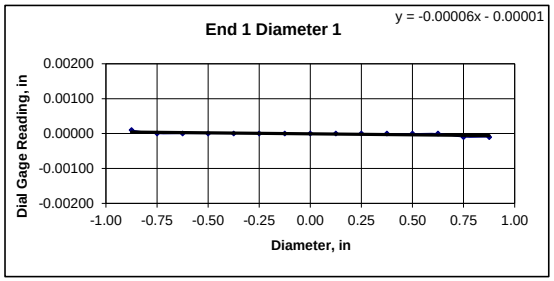

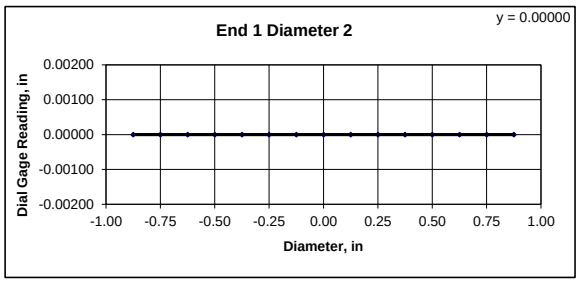

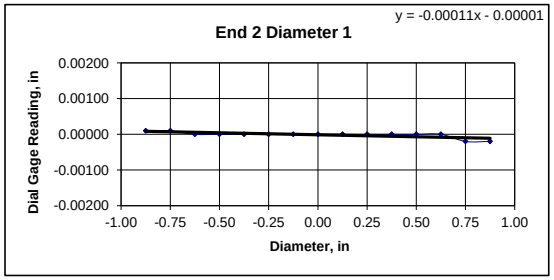

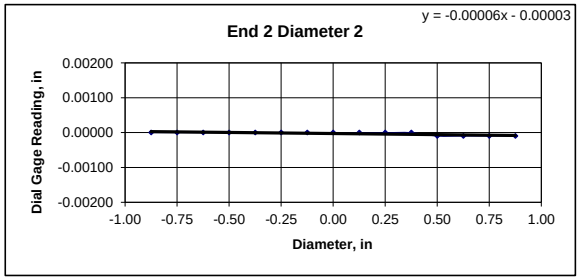

DIAMETER 1

End 1:
- Slope of Best Fit Line: 0.00006
- Angle of Best Fit Line: 0.00327

End 2:
- Slope of Best Fit Line: 0.00011
- Angle of Best Fit Line: 0.00638

Maximum Angular Difference: 0.00311

Parallelism Tolerance Met? YES

Spherically Seated

DIAMETER 2

End 1:
- Slope of Best Fit Line: 0.00000
- Angle of Best Fit Line: 0.00000

End 2:
- Slope of Best Fit Line: 0.00006
- Angle of Best Fit Line: 0.00360

Maximum Angular Difference: 0.00360

Parallelism Tolerance Met? YES

Spherically Seated

PERPENDICULARITY (Procedure P1) (Calculated from End Flatness and Parallelism measurements above)

END 1	Difference, Maximum and Minimum (in.)	Diameter (in.)	Slope	Angle°	Perpendicularity Tolerance Met?
Diameter 1, in	0.00020	1.970	0.00010	0.006	YES
Diameter 2, in (rotated 90°)	0.00000	1.970	0.00000	0.000	YES
END 2					
Diameter 1, in	0.00030	1.970	0.00015	0.009	YES
Diameter 2, in (rotated 90°)	0.00010	1.970	0.00005	0.003	YES

Maximum angle of departure must be ≤ 0.25°

Perpendicularity Tolerance Met? YES

Client:	AECOM
Project Name:	SWSC Westfield Hydropower Facility
Project Location:	Westfield, MA
GTX #:	314421
Test Date:	10/15/2021
Tested By:	kdp
Checked By:	smd
Boring ID:	B21-2 R-1
Sample ID:	B21-2 R-1
Depth, ft:	16-17

After cutting and grinding

After break

Client:	AECOM	Test Date:	10/11/2021
Project Name:	SWSC Westfield Hydropower Facility	Tested By:	ak
Project Location:	Westfield, MA	Checked By:	smd
GTX #:	314421		
Boring ID:	B21-4 R-1		
Sample ID:	B21-4 R-1		
Depth:	14.3-14.9 ft		
Visual Description:	See photographs		

UNIT WEIGHT DETERMINATION AND DIMENSIONAL AND SHAPE TOLERANCES OF ROCK CORE SPECIMENS BY ASTM D4543

BULK DENSITY

	1	2	Average
Specimen Length, in:	4.40	4.39	4.40
Specimen Diameter, in:	1.97	1.97	1.97
Specimen Mass, g:	595.97		
Bulk Density, lb/ft^3	169	**Minimum Diameter Tolerence Met?**	YES
Length to Diameter Ratio:	2.2	**Length to Diameter Ratio Tolerance Met?**	YES

DEVIATION FROM STRAIGHTNESS (Procedure S1)

Maximum gap between side of core and reference surface plate:
Is the maximum gap ≤ 0.02 in.? YES

Maximum difference must be < 0.020 in.
Straightness Tolerance Met? YES

END FLATNESS AND PARALLELISM (Procedure FP1)

END 1	-0.875	-0.750	-0.625	-0.500	-0.375	-0.250	-0.125	0.000	0.125	0.250	0.375	0.500	0.625	0.750	0.875
Diameter 1, in	0.00000	0.00000	0.00000	0.00000	0.00000	0.00000	0.00000	0.00000	0.00000	0.00000	0.00000	0.00000	0.00000	0.00000	0.00000
Diameter 2, in (rotated 90°)	0.00000	0.00000	0.00000	0.00000	0.00000	0.00000	0.00000	0.00000	0.00000	0.00000	0.00000	0.00000	0.00000	0.00000	0.00010

Difference between max and min readings, in:
0° = 0.00000 90° = 0.00010

END 2	-0.875	-0.750	-0.625	-0.500	-0.375	-0.250	-0.125	0.000	0.125	0.250	0.375	0.500	0.625	0.750	0.875
Diameter 1, in	0.00000	0.00000	0.00000	0.00000	0.00000	0.00000	0.00000	0.00000	0.00000	0.00000	0.00000	0.00000	-0.00010	-0.00010	-0.00020
Diameter 2, in (rotated 90°)	0.00020	0.00010	0.00000	0.00000	0.00000	0.00000	0.00000	0.00000	0.00000	0.00000	0.00000	0.00000	0.00000	0.00000	-0.00010

Difference between max and min readings, in:
0° = 0.0002 90° = 0.0003

Maximum difference must be < 0.0020 in. Difference = ± 0.00015
Flatness Tolerance Met? YES

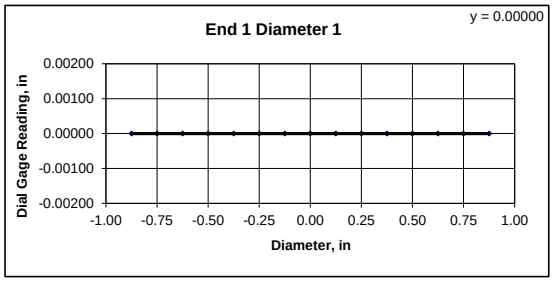

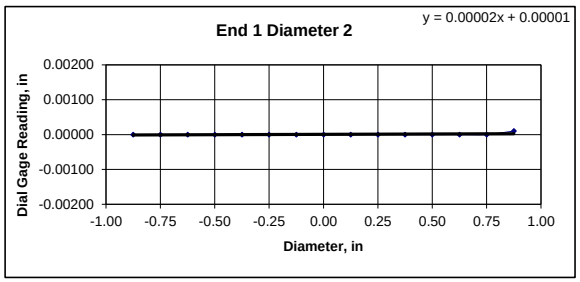

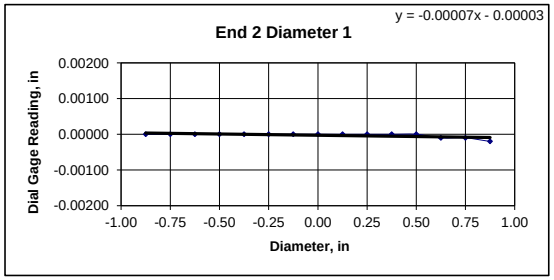

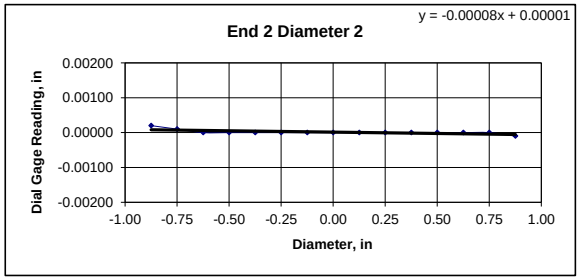

DIAMETER 1

End 1:
Slope of Best Fit Line 0.00000
Angle of Best Fit Line: 0.00000

End 2:
Slope of Best Fit Line 0.00007
Angle of Best Fit Line: 0.00409

Maximum Angular Difference: 0.00409

Parallelism Tolerance Met? YES
Spherically Seated

DIAMETER 2

End 1:
Slope of Best Fit Line 0.00002
Angle of Best Fit Line: 0.00115

End 2:
Slope of Best Fit Line 0.00008
Angle of Best Fit Line: 0.00442

Maximum Angular Difference: 0.00327

Parallelism Tolerance Met? YES
Spherically Seated

PERPENDICULARITY (Procedure P1) (Calculated from End Flatness and Parallelism measurements above)

END 1	Difference, Maximum and Minimum (in.)	Diameter (in.)	Slope	Angle°	Perpendicularity Tolerance Met?
Diameter 1, in	0.00000	1.970	0.00000	0.000	YES
Diameter 2, in (rotated 90°)	0.00010	1.970	0.00005	0.003	YES
END 2					
Diameter 1, in	0.00020	1.970	0.00010	0.006	YES
Diameter 2, in (rotated 90°)	0.00030	1.970	0.00015	0.009	YES

Maximum angle of departure must be ≤ 0.25°
Perpendicularity Tolerance Met? YES

Client:	AECOM
Project Name:	SWSC Westfield Hydropower Facility
Project Location:	Westfield, MA
GTX #:	314421
Test Date:	10/15/2021
Tested By:	kdp
Checked By:	smd
Boring ID:	B21-4 R-1
Sample ID:	B21-4 R-1
Depth, ft:	14.3-14.9

After cutting and grinding

After break

ATTACHMENT 3

Existing Boring Location Plan and Boring Logs
(CDM Smith, 2017)

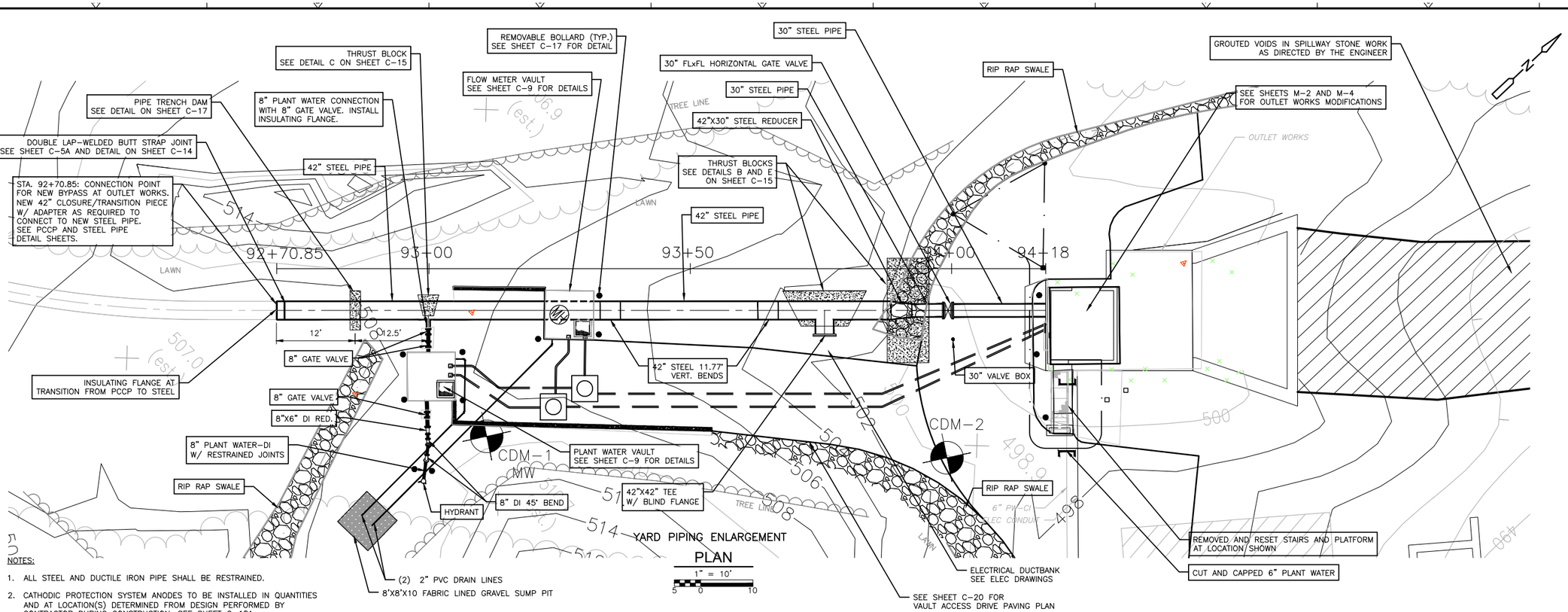

NOTES:

1. ALL STEEL AND DUCTILE IRON PIPE SHALL BE RESTRAINED.
2. CATHODIC PROTECTION SYSTEM ANODES TO BE INSTALLED IN QUANTITIES AND AT LOCATION(S) DETERMINED FROM DESIGN PERFORMED BY CONTRACTOR DURING CONSTRUCTION. SEE SHEET C-18A.

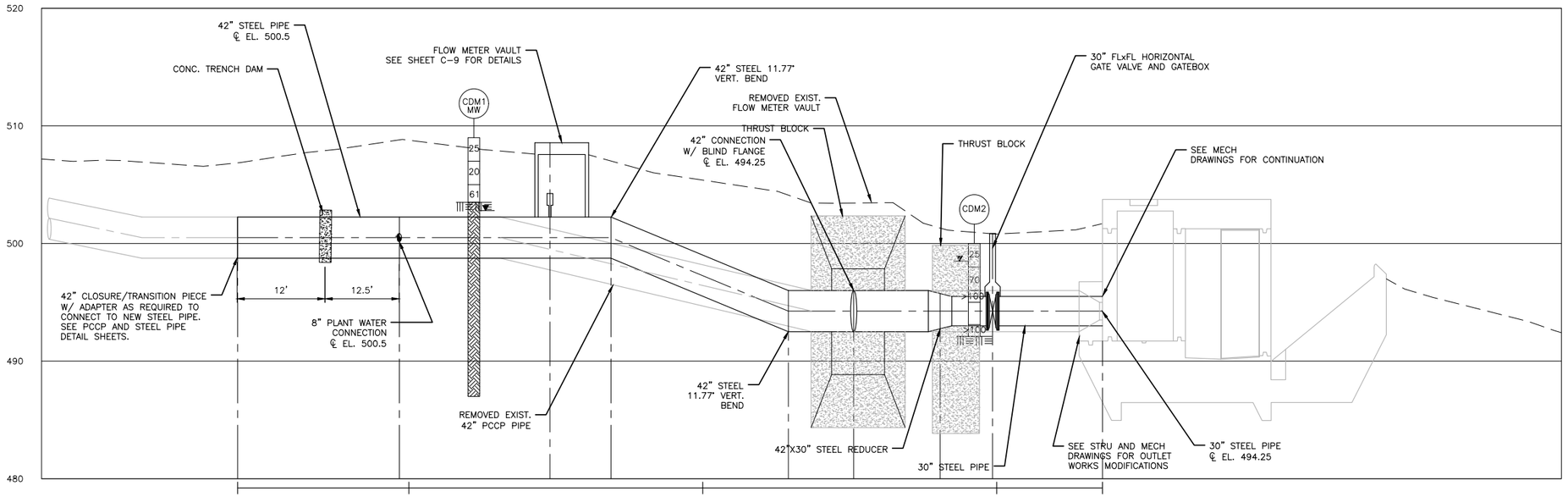

YARD PIPING

PROFILE

HOR. 1"=10' – VERT. 1"=5'

RECORD DRAWING

THIS RECORD DRAWING HAS BEEN PREPARED BASED ON A COMBINATION OF INFORMATION PROVIDED BY OTHERS AND BY CDM SMITH. THEREFORE, THE ENGINEER HAS NOT VERIFIED THE ACCURACY OF ALL THE INFORMATION. TO THE BEST OF THE ENGINEER'S BELIEF AND KNOWLEDGE, THE INCLUDED RECORD INFORMATION IS REASONABLY ACCURATE.

By _____ Date 1-24-2020

CDM Smith

REV. NO.	DATE	DRWN	CHKD	REMARKS

DESIGNED BY: J. O'DONNELL
DRAWN BY: J. O'DONNELL
SHEET CHK'D BY: B. HICKEY
CROSS CHK'D BY: J. PESCATORE
APPROVED BY: B. HICKEY
DATE: SEPTEMBER 2017

CDM Smith
75 State Street
Boston, MA 02109
Tel: (617) 452-6000

SPRINGFIELD WATER AND SEWER COMMISSION
SPRINGFIELD, MASSACHUSETTS
WEST PARISH FILTERS
RAW WATER CONVEYANCE SYSTEM IMPROVEMENTS

OUTLET WORKS
YARD PIPING ENLARGEMENT PLAN

PROJECT NO. 10946-217028
FILE NAME: C005YPPL.DWG
SHEET NO.
C-5

XREFs: [CDMS_2436, C000WPYP, XCVWP002, SWP020WPL, EOWWP001, LUDLOW CONST AS BUILT 9-12-19, LUDLOW CONST BRIDGE PLOT 9-19-19] Images: []
Last saved by: ENGELSB Time: 1/27/2020 2:27:57 PM
pw:\\pw.cdmsmith.com:PW_PL1\10946\217028\04 Design Services NM_Record\02 Civil\10 CADD\C005YPPL.dwg
© 2017 CDM SMITH ALL RIGHTS RESERVED.
REUSE OF DOCUMENTS: THESE DOCUMENTS AND DESIGNS PROVIDED BY PROFESSIONAL SERVICE, INCORPORATED HEREIN, ARE THE PROPERTY OF CDM SMITH AND ARE NOT TO BE USED, IN WHOLE OR PART, FOR ANY OTHER PROJECT WITHOUT THE WRITTEN AUTHORIZATION OF CDM SMITH.

CDM Smith

Boring Number: CDM-1 (MW)

Client: SWSC
Project Name: Raw Water Conveyance Improvements
Project Location: Westfield, MA
Project Number: 10946-217028

Drilling Contractor/Driller: New England Boring Contractors / Orrin Cone
Drilling Method/Casing/Core Barrel Size: Drive and Wash / 4 in /
Hammer Weight/Drop Height/ Spoon Size: 140 lb / 30 in /2 in O.D.
Bore Hole Location: See Boring Location Plan
Drilling Date: Start: 3/10/2017 **End:** 3/10/2017

Surface Elevation (ft.): 508
Total Depth (ft.): 22
Depth to Initial Water Level (ft):

Depth	Date	Time
6.2	3/10/2017	1500

Abandonment Method: Monitoring well installed
Logged By: J. Scheetz

Elev. Depth (ft)	Sample Type	Sample Number	Sample Length (in)	Blows per 6 inches	Sample Recovery (in)	N-Value	Graphic Log	Strata	Material Description	Remarks
508.0 / 0	SS	S-1	24	8, 15, 10, 8	9	25		Gravel and Sand	Dry, medium dense, brown, fine to coarse GRAVEL and fine to coarse SAND, trace silt	- Top 3" organic
	SS	S-2	24	14, 9, 11, 6	0	20			No Recovery	- Drove two 2" split spoons with no recovery. 3" spoon not available.
503.0 / 5	SS	S-3	18	15, 18, 43, 50/0"	8	61			Top 6": Dry, very dense, brown, fine to coarse GRAVEL and fine to coarse SAND, trace silt	
▼									Bottom 2": Moist, hard, light brown, SILT & CLAY, little fine to medium sand, trace fine gravel	- Cleared from 5.5' to 7.0' bgs in possible bedrock.
498.0 / 10	NX	C-1						Bedrock	See rock core log for remainder of boring.	
493.0 / 15	NX	C-2								
	NX	C-3								
488.0										

Sample Types

AS - Auger/Grab Sample
CS - California Sampler
BQ - 1.5" Rock Core
NX - 2" Rock Core
HP - Hydro Punch
SS - Split Spoon
ST - Shelby Tube
WS - Wash Sample
GP - Geoprobe

Consistency vs Blowcount/Foot

Granular (Sand):

V. Loose:	0-4	Dense:	30-50
Loose:	4-10	V. Dense:	>50
M. Dense:	10-30		

Fine Grained (Clay):

V. Soft:	<2	Stiff:	8-15
Soft:	2-4	V. Stiff:	15-30
M. Stiff:	4-8	Hard:	>30

Burmister Classification

and	35-50%
some	20-35%
little	10-20%
trace	<10%

moisture, density, color

Reviewed by: V. Chan | **Date: 5/8/2017** | **Boring Number: CDM-1 (MW)**

BL SWSC RAW WATER BORING LOGS.GPJ - 09/05/17

CDM Smith

Boring Number: CDM-1 (MW)

Client: SWSC
Project Location: Westfield, MA
Project Name: Raw Water Conveyance Improvements
Project Number: 10946-217028

Elev. Depth (ft)	Sample Type	Sample Number	Sample Length (in)	Blows per 6 inches	Sample Recovery (in)	N-Value	Graphic Log	Strata	Material Description	Remarks
488.0 20	NX	C-3						Bedrock		
									Boring terminated at 22 ft bgs.	
483.0 25										
478.0 30										
473.0 35										
468.0 40										
463.0 45										

BL SWSC RAW WATER BORING LOGS.GPJ - 09/05/17

CDM Smith

Boring Number: CDM-1 (MW)

Client: SWSC
Project Location: Westfield, MA
Project Name: Raw Water Conveyance Improvements
Project Number: 10946-217028

Elevation / Depth (ft)	Sample Type	Sample Number	Sample Length (in)	Recovery (%)	RQD (%)	Drill Rate (min/ft)	Down Press. (psi)	Graphic Log	Strata	Material Description	Remarks
498.0 / 10.0	NX	C-1	60	40	30	8 8 9 10 5	NR		Bedrock	Top 16" - Hard, moderately weathered, gray with white, red in seams, coarse grained, PEGMATITE; Primary joint set: High angle, moderately spaced, rough, planar, decomposed surfaces, open aperture Bottom 8" - Moderately hard, slightly weathered, gray, SCHIST; Primary joint set: Moderately dipping, moderately spaced, smooth slickensided, planar, decomposed, partly open	
493.0 / 15.0	NX	C-2	60	100	85	11 9 4 6 7	NR			Moderately hard, slightly weathered, gray, SCHIST; Primary joint set: Moderately dipping, moderately spaced, smooth slickensided, planar, decomposed, partly open	
488.0 / 20.0	NX	C-3	60	90	73	5 4 11 5 4	NR			Moderately hard, slightly weathered, gray, SCHIST; Primary joint set: Moderately dipping, moderately spaced, smooth slickensided, planar, decomposed, partly open	- Schist transitions to white/light gray from 21" to 38" into core
483.0 / 25.0										Boring terminated at 22 ft bgs.	

Bedding (mm)

Extremely Thin	<20
Very Thin	20-60
Thin	60-200
Medium	200-600
Thick	600-2000
Very Thick	2000-6000
Extremely Thick	>6000

Joint Spacing (mm)

Extremely Close	<20
Very Close	20-60
Close	60-200
Mod Close	200-600
Wide	600-2000
Very Wide	2000-6000
Extremely Wide	>6000

Continuity (mm)

Extremely	<25
Moderately	25-100
Slightly	100-200
Sound	>200

Attitude Angle

Horizontal	0° - 5°
Shallow	5° - 35°
Moderate	35° - 55°
Steep	55° - 85°
Vertical	85° - 90°

Aperture (mm)

Very Tight	< 0.1
Tight	0.1 - 0.25
Partly Open	0.25 - 0.5
Open	0.5 - 2.5
Mod. Wide	2.5 - 10
Wide	>10

Field Hardness

Very Hard	Knife Can't Scratch
Hard	Scratches with Difficulty
Med. Hard	Scratches Readily
Medium	Grooves with Difficulty
Soft	Grooves Readily
Very Soft	Carves with Knife

Weathering

Fresh	No Visible sign of rock material weathering; slight to no discoloration.
Slight	Discoloration indicated weathering. All the rock material may be discoloredand may be weaker externally than its fresh condition.
Moderate	Less than half of the rock material is decomposed and/or disintergrated to a soil. Fresh or discolored rock is present either as a continuous framework or as corestones.
Severe	More than half of the rock material is decomposed and/or disintegrated to a soil. Fresh or discolored rock is present either as a continuous framework or as corestone.
Complete	All rock material is decomposed and/or disintegrated to soil. The original mass structure is largely intact.
Residual Soil	All rock material is converted to soil. The mass structure and material fabric are destroyed. There is a large change in volume, but the soil has not been significantly transported.

Reviewed by: V. Chan | **Date: 5/8/2017** | **Boring Number: CDM-1 (MW)**

ROCK CORING LOG SWSC RAW WATER BORING LOGS.GPJ - 09/05/17

CDM Smith

Boring Number: CDM-2

Client: SWSC
Project Location: Westfield, MA
Project Name: Raw Water Conveyance Improvements
Project Number: 10946-217028

Drilling Contractor/Driller: New England Boring Contractors / Orrin Cone
Drilling Method/Casing/Core Barrel Size: Drive and Wash / 4 in /
Hammer Weight/Drop Height/ Spoon Size: 140 lb / 30 in /2 in O.D.
Bore Hole Location: See Boring Location Plan
Drilling Date: Start: 3/10/2017 **End:** 3/10/2017

Surface Elevation (ft.): 500
Total Depth (ft.): 7.9
Depth to Initial Water Level (ft):

Depth	Date	Time
1.5	3/10/2017	1500

Abandonment Method: Backfilled with cuttings
Logged By: J. Scheetz

Elev. Depth (ft)	Sample Type	Sample Number	Sample Length (in)	Blows per 6 inches	Sample Recovery (in)	N-Value	Graphic Log	Strata	Material Description	Remarks
500.0 0	SS	S-1	21	9 12 13 30/3"	4	25		Sand	Moist, medium dense, brown, fine to coarse SAND, some silt, little fine to coarse gravel	- Black gravel-sized piece of rock in tip of spoon. - Drill through possible boulder from 1.75' to 2.5' bgs.
	SS	S-2	24	10 31 39 95	12	70			Top 7": Moist, medium dense, black to light brown, fine to medium SAND, some silt, little fine to coarse gravel	
495.0 5	SS	S-3	8	70 100/2"	5	>100		Weathered Rock	Bottom 5": Dry, very dense, black to gray, fine to coarse GRAVEL, some fine to coarse sand, little silt [Completely Weathered Rock} Dry, very dense, black to gray, fine to coarse GRAVEL, some fine to coarse sand, little silt [Completely Weathered Rock]	
	SS	S-4	5	100/5"	0	>100			No Recovery Split spoon refusal at 7.9' bgs.	- Very slow penetration with roller bit.
490.0 10										
485.0 15										
480.0										

Sample Types

AS - Auger/Grab Sample
CS - California Sampler
BQ - 1.5" Rock Core
NX - 2" Rock Core
HP - Hydro Punch
SS - Split Spoon
ST - Shelby Tube
WS - Wash Sample
GP - Geoprobe

Consistency vs Blowcount/Foot

Granular (Sand):

V. Loose:	0-4	Dense:	30-50
Loose:	4-10	V. Dense:	>50
M. Dense:	10-30		

Fine Grained (Clay):

V. Soft:	<2	Stiff:	8-15
Soft:	2-4	V. Stiff:	15-30
M. Stiff:	4-8	Hard:	>30

Burmister Classification

and	35-50%
some	20-35%
little	10-20%
trace	<10%

moisture, density, color

Reviewed by: V. Chan | **Date: 5/8/2017** | **Boring Number: CDM-2**

BL SWSC RAW WATER BORING LOGS.GPJ - 09/05/17

Order of Conditions

City of Westfield Conservation Commission

59 Court Street Westfield, MA 01085
Phone: 413-572-6281
Email: anna.meassick@cityofwestfield.org

September 28, 2023

AECOM
c/o Jennifer Doyle-Breen
250 Apollo Drive
Chelmsford, MA 01824

RE: Order of Conditions - 1515 Granvile Road, Westfield – DEP File #333-836

Dear Ms. Doyle-Breen:

Enclosed please find a ***copy*** of the Order of Conditions (the "Order") issued by the Westfield Conservation Commission on the above referenced DEP file number. ***Prior to beginning work, either the applicant or representative must come to our office to pick up the original print of the Order***. This Order is subject to a 10-day appeal period, which consists of workdays, excluding holidays, beginning on the postmark date of this mailing. Work may not begin on this project until the 10-day appeal period has expired.

Prior to beginning work, read the Order carefully. Work may not begin on this project until several conditions are complied with including but not limited to:

1. Submission of a SWPPP to the Commission (Condition 51)
2. Deed recording of the Original Order and restriction language must be completed and a receipt submitted to the Commission (Condition 52)
3. Letters of understanding from the applicant and contractor (Conditions 55& 56)
4. A pre-construction meeting with the Coordinator and/or Commission (Condition 60)
5. Submission of emergency contact information (Condition 61)
6. Installation of erosion controls as depicted on the plans (Condition 68)
7. The filing of a $10,000.00 bond to the Treasurer of the City of Westfield (Condition 79)

It is your responsibility to ensure compliance with the Order. If work commences without compliance, the Commission has the right to issue an Enforcement Order immediately ceasing all work until you are in full compliance with the Order. Please do not hesitate to contact me with any questions you may have.

Sincerely,

A Meassick

Anna Meassick
Director of Conservation

Encl. Order of Conditions
cc (via eDEP): Department of Environmental Protection

Massachusetts Department of Environmental Protection
Bureau of Resource Protection - Wetlands

WPA Form 5 – Order of Conditions

Massachusetts Wetlands Protection Act M.G.L. c. 131, §40

Provided by MassDEP:
333-836
MassDEP File #

eDEP Transaction #

Westfield
City/Town

A. General Information

Please note: this form has been modified with added space to accommodate the Registry of Deeds Requirements

Important: When filling out forms on the computer, use only the tab key to move your cursor - do not use the return key.

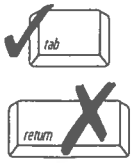

1. From: Westfield
Conservation Commission

2. This issuance is for (check one): a. ☒ Order of Conditions b. ☐ Amended Order of Conditions

3. To: Applicant:

James — a. First Name
Laurila — b. Last Name
Springfield Water and Sewer Commission — c. Organization
250 M Street — d. Mailing Address
Agawam — e. City/Town
MA — f. State
01001 — g. Zip Code

4. Property Owner (if different from applicant):

a. First Name
b. Last Name
c. Organization
d. Mailing Address
e. City/Town
f. State
g. Zip Code

5. Project Location:

1515 Granville Road — a. Street Address
Westfield — b. City/Town
20R — c. Assessors Map/Plat Number
2 — d. Parcel/Lot Number

Latitude and Longitude, if known: d m s — d. Latitude; d m s — e. Longitude

Massachusetts Department of Environmental Protection
Bureau of Resource Protection - Wetlands
WPA Form 5 – Order of Conditions
Massachusetts Wetlands Protection Act M.G.L. c. 131, §40

Provided by MassDEP:
333-836
MassDEP File #

eDEP Transaction #

Westfield
City/Town

A. General Information (cont.)

6. Property recorded at the Registry of Deeds for (attach additional information if more than one parcel):

Hampden
a. County

b. Certificate Number (if registered land)

1174
c. Book

591
d. Page

7. Dates: June 26, 2023 (a. Date Notice of Intent Filed) September 26, 2023 (b. Date Public Hearing Closed) (c. Date of Issuance)

8. Final Approved Plans and Other Documents (attach additional plan or document references as needed):

42 Inch raw water bypass conveyance pipeline rehabilitation and energy dissipation valve chamber

AECOM
b. Prepared By

c. Signed and Stamped by

September 21, 2023
d. Final Revision Date

1:60
e. Scale

f. Additional Plan or Document Title

g. Date

B. Findings

1. Findings pursuant to the Massachusetts Wetlands Protection Act:

Following the review of the above-referenced Notice of Intent and based on the information provided in this application and presented at the public hearing, this Commission finds that the areas in which work is proposed is significant to the following interests of the Wetlands Protection Act (the Act). Check all that apply:

a. ☒ Public Water Supply b. ☐ Land Containing Shellfish c. ☒ Prevention of Pollution

d. ☒ Private Water Supply e. ☒ Fisheries f. ☒ Protection of Wildlife Habitat

g. ☒ Groundwater Supply h. ☒ Storm Damage Prevention i. ☒ Flood Control

2. This Commission hereby finds the project, as proposed, is: (check one of the following boxes)

Approved subject to:

a. ☒ the following conditions which are necessary in accordance with the performance standards set forth in the wetlands regulations. This Commission orders that all work shall be performed in accordance with the Notice of Intent referenced above, the following General Conditions, and any other special conditions attached to this Order. To the extent that the following conditions modify or differ from the plans, specifications, or other proposals submitted with the Notice of Intent, these conditions shall control.

Massachusetts Department of Environmental Protection
Bureau of Resource Protection - Wetlands
WPA Form 5 – Order of Conditions
Massachusetts Wetlands Protection Act M.G.L. c. 131, §40

Provided by MassDEP:
333-836
MassDEP File #

eDEP Transaction #

Westfield
City/Town

B. Findings (cont.)

Denied because:

b. ☐ the proposed work cannot be conditioned to meet the performance standards set forth in the wetland regulations. Therefore, work on this project may not go forward unless and until a new Notice of Intent is submitted which provides measures which are adequate to protect the interests of the Act, and a final Order of Conditions is issued. **A description of the performance standards which the proposed work cannot meet is attached to this Order.**

c. ☐ the information submitted by the applicant is not sufficient to describe the site, the work, or the effect of the work on the interests identified in the Wetlands Protection Act. Therefore, work on this project may not go forward unless and until a revised Notice of Intent is submitted which provides sufficient information and includes measures which are adequate to protect the Act's interests, and a final Order of Conditions is issued. **A description of the specific information which is lacking and why it is necessary is attached to this Order as per 310 CMR 10.05(6)(c).**

3. ☒ Buffer Zone Impacts: Shortest distance between limit of project disturbance and the wetland resource area specified in 310 CMR 10.02(1)(a) — 20 a. linear feet

Inland Resource Area Impacts: Check all that apply below. (For Approvals Only)

Resource Area	Proposed Alteration	Permitted Alteration	Proposed Replacement	Permitted Replacement
4. ☒ Bank	8 a. linear feet	8 b. linear feet	8 c. linear feet	8 d. linear feet
5. ☐ Bordering Vegetated Wetland	a. square feet	b. square feet	c. square feet	d. square feet
6. ☒ Land Under Waterbodies and Waterways	nominal # a. square feet 0 e. c/y dredged	nominal # b. square feet 0 f. c/y dredged	0 c. square feet	0 d. square feet
7. ☐ Bordering Land Subject to Flooding	a. square feet	b. square feet	c. square feet	d. square feet
Cubic Feet Flood Storage	e. cubic feet	f. cubic feet	g. cubic feet	h. cubic feet
8. ☐ Isolated Land Subject to Flooding	a. square feet	b. square feet		
Cubic Feet Flood Storage	c. cubic feet	d. cubic feet	e. cubic feet	f. cubic feet
9. ☒ Riverfront Area	160 a. total sq. feet	160 b. total sq. feet		
Sq ft within 100 ft	200 c. square feet	200 d. square feet	200 e. square feet	200 f. square feet
Sq ft between 100-200 ft	260 g. square feet	260 h. square feet	260 i. square feet	260 j. square feet

Massachusetts Department of Environmental Protection
Bureau of Resource Protection - Wetlands
WPA Form 5 – Order of Conditions
Massachusetts Wetlands Protection Act M.G.L. c. 131, §40

Provided by MassDEP:
333-836
MassDEP File #

eDEP Transaction #
Westfield
City/Town

B. Findings (cont.)

Coastal Resource Area Impacts: Check all that apply below. (For Approvals Only)

	Proposed Alteration	Permitted Alteration	Proposed Replacement	Permitted Replacement
10. ☐ Designated Port Areas	Indicate size under Land Under the Ocean, below			
11. ☐ Land Under the Ocean	a. square feet	b. square feet		
	c. c/y dredged	d. c/y dredged		
12. ☐ Barrier Beaches	Indicate size under Coastal Beaches and/or Coastal Dunes below			
13. ☐ Coastal Beaches	a. square feet	b. square feet	c. cu yd nourishment	d. cu yd nourishment
14. ☐ Coastal Dunes	a. square feet	b. square feet	c. cu yd nourishment	d. cu yd nourishment
15. ☐ Coastal Banks	a. linear feet	b. linear feet		
16. ☐ Rocky Intertidal Shores	a. square feet	b. square feet		
17. ☐ Salt Marshes	a. square feet	b. square feet	c. square feet	d. square feet
18. ☐ Land Under Salt Ponds	a. square feet	b. square feet		
	c. c/y dredged	d. c/y dredged		
19. ☐ Land Containing Shellfish	a. square feet	b. square feet	c. square feet	d. square feet
20. ☐ Fish Runs	Indicate size under Coastal Banks, Inland Bank, Land Under the Ocean, and/or inland Land Under Waterbodies and Waterways, above			
	a. c/y dredged	b. c/y dredged		
21. ☐ Land Subject to Coastal Storm Flowage	a. square feet	b. square feet		
22. ☐ Riverfront Area	a. total sq. feet	b. total sq. feet		
Sq ft within 100 ft	c. square feet	d. square feet	e. square feet	f. square feet
Sq ft between 100-200 ft	g. square feet	h. square feet	i. square feet	j. square feet

Massachusetts Department of Environmental Protection
Bureau of Resource Protection - Wetlands
WPA Form 5 – Order of Conditions
Massachusetts Wetlands Protection Act M.G.L. c. 131, §40

Provided by MassDEP:
333-836
MassDEP File #

eDEP Transaction #
Westfield
City/Town

B. Findings (cont.)

* **#23**. If the project is for the purpose of restoring or enhancing a wetland resource area in addition to the square footage that has been entered in Section B.5.c (BVW) or B.17.c (Salt Marsh) above, please enter the additional amount here.

23. ☐ Restoration/Enhancement *:

a. square feet of BVW | b. square feet of salt marsh

24. ☐ Stream Crossing(s):

a. number of new stream crossings | b. number of replacement stream crossings

C. General Conditions Under Massachusetts Wetlands Protection Act

The following conditions are only applicable to Approved projects.

1. Failure to comply with all conditions stated herein, and with all related statutes and other regulatory measures, shall be deemed cause to revoke or modify this Order.
2. The Order does not grant any property rights or any exclusive privileges; it does not authorize any injury to private property or invasion of private rights.
3. This Order does not relieve the permittee or any other person of the necessity of complying with all other applicable federal, state, or local statutes, ordinances, bylaws, or regulations.
4. The work authorized hereunder shall be completed within three years from the date of this Order unless either of the following apply:
   a. The work is a maintenance dredging project as provided for in the Act; or
   b. The time for completion has been extended to a specified date more than three years, but less than five years, from the date of issuance. If this Order is intended to be valid for more than three years, the extension date and the special circumstances warranting the extended time period are set forth as a special condition in this Order.
   c. If the work is for a Test Project, this Order of Conditions shall be valid for no more than one year.
5. This Order may be extended by the issuing authority for one or more periods of up to three years each upon application to the issuing authority at least 30 days prior to the expiration date of the Order. An Order of Conditions for a Test Project may be extended for one additional year only upon written application by the applicant, subject to the provisions of 310 CMR 10.05(11)(f).
6. If this Order constitutes an Amended Order of Conditions, this Amended Order of Conditions does not extend the issuance date of the original Final Order of Conditions and the Order will expire on September 26, 2026 unless extended in writing by the Department.
7. Any fill used in connection with this project shall be clean fill. Any fill shall contain no trash, refuse, rubbish, or debris, including but not limited to lumber, bricks, plaster, wire, lath, paper, cardboard, pipe, tires, ashes, refrigerators, motor vehicles, or parts of any of the foregoing.

Massachusetts Department of Environmental Protection
Bureau of Resource Protection - Wetlands
WPA Form 5 – Order of Conditions
Massachusetts Wetlands Protection Act M.G.L. c. 131, §40

Provided by MassDEP:
333-836
MassDEP File #

eDEP Transaction #
Westfield
City/Town

C. General Conditions Under Massachusetts Wetlands Protection Act

8. This Order is not final until all administrative appeal periods from this Order have elapsed, or if such an appeal has been taken, until all proceedings before the Department have been completed.

9. No work shall be undertaken until the Order has become final and then has been recorded in the Registry of Deeds or the Land Court for the district in which the land is located, within the chain of title of the affected property. In the case of recorded land, the Final Order shall also be noted in the Registry's Grantor Index under the name of the owner of the land upon which the proposed work is to be done. In the case of the registered land, the Final Order shall also be noted on the Land Court Certificate of Title of the owner of the land upon which the proposed work is done. The recording information shall be submitted to the Conservation Commission on the form at the end of this Order, which form must be stamped by the Registry of Deeds, prior to the commencement of work.

10. A sign shall be displayed at the site not less then two square feet or more than three square feet in size bearing the words,

"Massachusetts Department of Environmental Protection" [or, "MassDEP"]

"File Number 333-0836 "

11. Where the Department of Environmental Protection is requested to issue a Superseding Order, the Conservation Commission shall be a party to all agency proceedings and hearings before MassDEP.

12. Upon completion of the work described herein, the applicant shall submit a Request for Certificate of Compliance (WPA Form 8A) to the Conservation Commission.

13. The work shall conform to the plans and special conditions referenced in this order.

14. Any change to the plans identified in Condition #13 above shall require the applicant to inquire of the Conservation Commission in writing whether the change is significant enough to require the filing of a new Notice of Intent.

15. The Agent or members of the Conservation Commission and the Department of Environmental Protection shall have the right to enter and inspect the area subject to this Order at reasonable hours to evaluate compliance with the conditions stated in this Order, and may require the submittal of any data deemed necessary by the Conservation Commission or Department for that evaluation.

16. This Order of Conditions shall apply to any successor in interest or successor in control of the property subject to this Order and to any contractor or other person performing work conditioned by this Order.

Massachusetts Department of Environmental Protection
Bureau of Resource Protection - Wetlands
WPA Form 5 – Order of Conditions
Massachusetts Wetlands Protection Act M.G.L. c. 131, §40

Provided by MassDEP:
333-836
MassDEP File #

eDEP Transaction #
Westfield
City/Town

C. General Conditions Under Massachusetts Wetlands Protection Act (cont.)

17. Prior to the start of work, and if the project involves work adjacent to a Bordering Vegetated Wetland, the boundary of the wetland in the vicinity of the proposed work area shall be marked by wooden stakes or flagging. Once in place, the wetland boundary markers shall be maintained until a Certificate of Compliance has been issued by the Conservation Commission.

18. All sedimentation barriers shall be maintained in good repair until all disturbed areas have been fully stabilized with vegetation or other means. At no time shall sediments be deposited in a wetland or water body. During construction, the applicant or his/her designee shall inspect the erosion controls on a daily basis and shall remove accumulated sediments as needed. The applicant shall immediately control any erosion problems that occur at the site and shall also immediately notify the Conservation Commission, which reserves the right to require additional erosion and/or damage prevention controls it may deem necessary. Sedimentation barriers shall serve as the limit of work unless another limit of work line has been approved by this Order.

19. The work associated with this Order (the "Project")
    (1) ☒ is subject to the Massachusetts Stormwater Standards
    (2) ☐ is NOT subject to the Massachusetts Stormwater Standards

    If the work is subject to the Stormwater Standards, then the project is subject to the following conditions:

    a) All work, including site preparation, land disturbance, construction and redevelopment, shall be implemented in accordance with the construction period pollution prevention and erosion and sedimentation control plan and, if applicable, the Stormwater Pollution Prevention Plan required by the National Pollution Discharge Elimination System Construction General Permit as required by Stormwater Condition 8. Construction period erosion, sedimentation and pollution control measures and best management practices (BMPs) shall remain in place until the site is fully stabilized.

    b) No stormwater runoff may be discharged to the post-construction stormwater BMPs unless and until a Registered Professional Engineer provides a Certification that:
    i. all construction period BMPs have been removed or will be removed by a date certain specified in the Certification. For any construction period BMPs intended to be converted to post construction operation for stormwater attenuation, recharge, and/or treatment, the conversion is allowed by the MassDEP Stormwater Handbook BMP specifications and that the BMP has been properly cleaned or prepared for post construction operation, including removal of all construction period sediment trapped in inlet and outlet control structures;
    ii. as-built final construction BMP plans are included, signed and stamped by a Registered Professional Engineer, certifying the site is fully stabilized;
    iii. any illicit discharges to the stormwater management system have been removed, as per the requirements of Stormwater Standard 10;

C. General Conditions Under Massachusetts Wetlands Protection Act (cont.)

iv. all post-construction stormwater BMPs are installed in accordance with the plans (including all planting plans) approved by the issuing authority, and have been inspected to ensure that they are not damaged and that they are in proper working condition;

v. any vegetation associated with post-construction BMPs is suitably established to withstand erosion.

c) The landowner is responsible for BMP maintenance until the issuing authority is notified that another party has legally assumed responsibility for BMP maintenance. Prior to requesting a Certificate of Compliance, or Partial Certificate of Compliance, the responsible party (defined in General Condition 18(e)) shall execute and submit to the issuing authority an Operation and Maintenance Compliance Statement ("O&M Statement) for the Stormwater BMPs identifying the party responsible for implementing the stormwater BMP Operation and Maintenance Plan ("O&M Plan") and certifying the following:

i.) the O&M Plan is complete and will be implemented upon receipt of the Certificate of Compliance, and

ii.) the future responsible parties shall be notified in writing of their ongoing legal responsibility to operate and maintain the stormwater management BMPs and implement the Stormwater Pollution Prevention Plan.

d) Post-construction pollution prevention and source control shall be implemented in accordance with the long-term pollution prevention plan section of the approved Stormwater Report and, if applicable, the Stormwater Pollution Prevention Plan required by the National Pollution Discharge Elimination System Multi-Sector General Permit.

e) Unless and until another party accepts responsibility, the landowner, or owner of any drainage easement, assumes responsibility for maintaining each BMP. To overcome this presumption, the landowner of the property must submit to the issuing authority a legally binding agreement of record, acceptable to the issuing authority, evidencing that another entity has accepted responsibility for maintaining the BMP, and that the proposed responsible party shall be treated as a permittee for purposes of implementing the requirements of Conditions 18(f) through 18(k) with respect to that BMP. Any failure of the proposed responsible party to implement the requirements of Conditions 18(f) through 18(k) with respect to that BMP shall be a violation of the Order of Conditions or Certificate of Compliance. In the case of stormwater BMPs that are serving more than one lot, the legally binding agreement shall also identify the lots that will be serviced by the stormwater BMPs. A plan and easement deed that grants the responsible party access to perform the required operation and maintenance must be submitted along with the legally binding agreement.

f) The responsible party shall operate and maintain all stormwater BMPs in accordance with the design plans, the O&M Plan, and the requirements of the Massachusetts Stormwater Handbook.

Massachusetts Department of Environmental Protection
Bureau of Resource Protection - Wetlands
WPA Form 5 – Order of Conditions
Massachusetts Wetlands Protection Act M.G.L. c. 131, §40

Provided by MassDEP:
333-836
MassDEP File #

eDEP Transaction #
Westfield
City/Town

C. General Conditions Under Massachusetts Wetlands Protection Act (cont.)

g) The responsible party shall:
1. Maintain an operation and maintenance log for the last three (3) consecutive calendar years of inspections, repairs, maintenance and/or replacement of the stormwater management system or any part thereof, and disposal (for disposal the log shall indicate the type of material and the disposal location);
2. Make the maintenance log available to MassDEP and the Conservation Commission ("Commission") upon request; and
3. Allow members and agents of the MassDEP and the Commission to enter and inspect the site to evaluate and ensure that the responsible party is in compliance with the requirements for each BMP established in the O&M Plan approved by the issuing authority.

h) All sediment or other contaminants removed from stormwater BMPs shall be disposed of in accordance with all applicable federal, state, and local laws and regulations.

i) Illicit discharges to the stormwater management system as defined in 310 CMR 10.04 are prohibited.

j) The stormwater management system approved in the Order of Conditions shall not be changed without the prior written approval of the issuing authority.

k) Areas designated as qualifying pervious areas for the purpose of the Low Impact Site Design Credit (as defined in the MassDEP Stormwater Handbook, Volume 3, Chapter 1, Low Impact Development Site Design Credits) shall not be altered without the prior written approval of the issuing authority.

l) Access for maintenance, repair, and/or replacement of BMPs shall not be withheld. Any fencing constructed around stormwater BMPs shall include access gates and shall be at least six inches above grade to allow for wildlife passage.

Special Conditions (if you need more space for additional conditions, please attach a text document):

See attachment A

20. For Test Projects subject to 310 CMR 10.05(11), the applicant shall also implement the monitoring plan and the restoration plan submitted with the Notice of Intent. If the conservation commission or Department determines that the Test Project threatens the public health, safety or the environment, the applicant shall implement the removal plan submitted with the Notice of Intent or modify the project as directed by the conservation commission or the Department.

Massachusetts Department of Environmental Protection
Bureau of Resource Protection - Wetlands
WPA Form 5 – Order of Conditions
Massachusetts Wetlands Protection Act M.G.L. c. 131, §40

Provided by MassDEP:
333-836
MassDEP File #

eDEP Transaction #
Westfield
City/Town

D. Findings Under Municipal Wetlands Bylaw or Ordinance

1. Is a municipal wetlands bylaw or ordinance applicable? ☒ Yes ☐ No

2. The Westfield Conservation Commission hereby finds (check one that applies):

   a. ☐ that the proposed work cannot be conditioned to meet the standards set forth in a municipal ordinance or bylaw, specifically:

   1. Municipal Ordinance or Bylaw — 2. Citation

   Therefore, work on this project may not go forward unless and until a revised Notice of Intent is submitted which provides measures which are adequate to meet these standards, and a final Order of Conditions is issued.

   b. ☒ that the following additional conditions are necessary to comply with a municipal ordinance or bylaw:

   Westfield Wetlands Protection Ordinance — 1738
   1. Municipal Ordinance or Bylaw — 2. Citation

3. The Commission orders that all work shall be performed in accordance with the following conditions and with the Notice of Intent referenced above. To the extent that the following conditions modify or differ from the plans, specifications, or other proposals submitted with the Notice of Intent, the conditions shall control.

   The special conditions relating to municipal ordinance or bylaw are as follows (if you need more space for additional conditions, attach a text document):

   See attachment A

Massachusetts Department of Environmental Protection
Bureau of Resource Protection - Wetlands
WPA Form 5 – Order of Conditions
Massachusetts Wetlands Protection Act M.G.L. c. 131, §40

Provided by MassDEP:
333-836
MassDEP File #

eDEP Transaction #

Westfield
City/Town

E. Signatures

This Order is valid for three years, unless otherwise specified as a special condition pursuant to General Conditions #4, from the date of issuance.

9.28.2023
1. Date of Issuance

Please indicate the number of members who will sign this form.
This Order must be signed by a majority of the Conservation Commission.

4
2. Number of Signers

The Order must be mailed by certified mail (return receipt requested) or hand delivered to the applicant. A copy also must be mailed or hand delivered at the same time to the appropriate Department of Environmental Protection Regional Office, if not filing electronically, and the property owner, if different from applicant.

Signature	Printed Name
	Robert S. Flevich
	JAMES R. MURPHY JR
David A Doe	David A Doe
	James T. Prystowski
	Carl Gruber
Signature	Printed Name
Signature	Printed Name
Signature	Printed Name

☐ by hand delivery on

Date

☒ by certified mail, return receipt requested, on 9.28.2023

Date

F. Appeals

The applicant, the owner, any person aggrieved by this Order, any owner of land abutting the land subject to this Order, or any ten residents of the city or town in which such land is located, are hereby notified of their right to request the appropriate MassDEP Regional Office to issue a Superseding Order of Conditions. The request must be made by certified mail or hand delivery to the Department, with the appropriate filing fee and a completed Request for Departmental Action Fee Transmittal Form, as provided in 310 CMR 10.03(7) within ten business days from the date of issuance of this Order. A copy of the request shall at the same time be sent by certified mail or hand delivery to the Conservation Commission and to the applicant, if he/she is not the appellant.

Any appellants seeking to appeal the Department's Superseding Order associated with this appeal will be required to demonstrate prior participation in the review of this project. Previous participation in the permit proceeding means the submission of written information to the Conservation Commission prior to the close of the public hearing, requesting a Superseding Order, or providing written information to the Department prior to issuance of a Superseding Order.

The request shall state clearly and concisely the objections to the Order which is being appealed and how the Order does not contribute to the protection of the interests identified in the Massachusetts Wetlands Protection Act (M.G.L. c. 131, § 40), and is inconsistent with the wetlands regulations (310 CMR 10.00). To the extent that the Order is based on a municipal ordinance or bylaw, and not on the Massachusetts Wetlands Protection Act or regulations, the Department has no appellate jurisdiction.

Massachusetts Department of Environmental Protection
Bureau of Resource Protection - Wetlands
WPA Form 5 – Order of Conditions
Massachusetts Wetlands Protection Act M.G.L. c. 131, §40

Provided by MassDEP:
333-836
MassDEP File #

eDEP Transaction #
Westfield
City/Town

G. Recording Information

Prior to commencement of work, this Order of Conditions must be recorded in the Registry of Deeds or the Land Court for the district in which the land is located, within the chain of title of the affected property. In the case of recorded land, the Final Order shall also be noted in the Registry's Grantor Index under the name of the owner of the land subject to the Order. In the case of registered land, this Order shall also be noted on the Land Court Certificate of Title of the owner of the land subject to the Order of Conditions. The recording information on this page shall be submitted to the Conservation Commission listed below.

Conservation Commission

Detach on dotted line, have stamped by the Registry of Deeds and submit to the Conservation Commission.

To:

Conservation Commission

Please be advised that the Order of Conditions for the Project at:

Project Location | MassDEP File Number

Has been recorded at the Registry of Deeds of:

County | Book | Page

for: Property Owner

and has been noted in the chain of title of the affected property in:

Book | Page

In accordance with the Order of Conditions issued on:

Date

If recorded land, the instrument number identifying this transaction is:

Instrument Number

If registered land, the document number identifying this transaction is:

Document Number

Signature of Applicant

Massachusetts Department of Environmental Protection
Bureau of Resource Protection - Wetlands

Request for Departmental Action Fee Transmittal Form

Massachusetts Wetlands Protection Act M.G.L. c. 131, §40

DEP File Number:

Provided by DEP

A. Request Information

1. Location of Project

a. Street Address

b. City/Town, Zip

c. Check number

d. Fee amount

Important: When filling out forms on the computer, use only the tab key to move your cursor - do not use the return key.

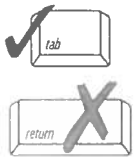

2. Person or party making request (if appropriate, name the citizen group's representative):

Name

Mailing Address

City/Town

State

Zip Code

Phone Number

Fax Number (if applicable)

3. Applicant (as shown on Determination of Applicability (Form 2), Order of Resource Area Delineation (Form 4B), Order of Conditions (Form 5), Restoration Order of Conditions (Form 5A), or Notice of Non-Significance (Form 6)):

Name

Mailing Address

City/Town

State

Zip Code

Phone Number

Fax Number (if applicable)

4. DEP File Number:

B. Instructions

1. When the Departmental action request is for (check one):

☐ Superseding Order of Conditions – Fee: $120.00 (single family house projects) or $245 (all other projects)

☐ Superseding Determination of Applicability – Fee: $120

☐ Superseding Order of Resource Area Delineation – Fee: $120

Massachusetts Department of Environmental Protection
Bureau of Resource Protection - Wetlands

Request for Departmental Action Fee Transmittal Form

Massachusetts Wetlands Protection Act M.G.L. c. 131, §40

DEP File Number:

Provided by DEP

B. Instructions (cont.)

Send this form and check or money order, payable to the *Commonwealth of Massachusetts,* to:

Department of Environmental Protection
Box 4062
Boston, MA 02211

2. On a separate sheet attached to this form, state clearly and concisely the objections to the Determination or Order which is being appealed. To the extent that the Determination or Order is based on a municipal bylaw, and not on the Massachusetts Wetlands Protection Act or regulations, the Department has no appellate jurisdiction.

3. Send a **copy** of this form and a **copy** of the check or money order with the Request for a Superseding Determination or Order by certified mail or hand delivery to the appropriate DEP Regional Office (see https://www.mass.gov/service-details/massdep-regional-offices-by-community).

4. A copy of the request shall at the same time be sent by certified mail or hand delivery to the Conservation Commission and to the applicant, if he/she is not the appellant.

Special Conditions Attachment A
DEP File #333-836
1515 Granville Road, Westfield MA
September 26, 2023

NOTE: Unless as otherwise noted, all conditions apply to this project under the Massachusetts Wetlands Protection Act (M.G.L. Chapter 131 §40), The Massachusetts Wetlands Regulations (310 CMR 10.00) and the Westfield Wetlands Protection Ordinance (#1738).

I. GENERAL:

20.) In case of emergencies, problems, or the need to discuss site conditions with the Conservation Commission, please contact the Commission during business hours at **(413) 572-6281**.

21.) The term "**Act**" as used in the Order of Conditions (hereinafter the "Order"), shall refer to the Massachusetts Wetlands Protection Act (M.G.L. Chapter 131, Section 40) and Massachusetts Wetlands Regulations (310 CMR 10.00).

22.) The term "**Applicant**" as used in the Order shall refer to the owner, any successor in interest or successor in control of the property referenced in the Notice of Intent, supporting documents and the Order. The Order shall apply to all successors in interest and successors in control.

23.) The term "**Plans**" as used in the Order shall refer to the Plans entitled 42 inch Raw Water Bypass Conveyance Pipeline Rehabilitation and Energy Dissipation Valve Chamber and dated September 21, 2023. The Order permits only the work as shown on the approved Plans.

24.) The term "**Ordinance**" as used in the Order shall refer to the City of Westfield Wetlands Protection Ordinance.

25.) Members of the Commission and/or its Coordinator shall have the right to enter and inspect the premises to evaluate and ensure compliance with these conditions and performance standards as stated in the Order and/or the Ordinance, and may require additional information, measurements, photographs, observations and/or materials or submittal of data or information deemed necessary by the Commission for that evaluation.

26.) The Commission reserves the right to impose additional conditions on any portion of this project that causes additional impact(s) to any area of jurisdiction under the Ordinance.

27.) If applicable, erosion control devices shall not block passage between uplands and vernal pools between the dates of March 1 and July 30. Where erosion controls have been placed in areas between uplands and vernal pools, exposed soils are to be stabilized, and silt

fencing or other devices that could block migration of amphibians to and from the pools is to be removed, no later than March 1 if construction has been occurring during the winter. If soils are not be stabilized by March 1, temporary stabilization measures shall be approved by the Commission.

28.) Unless otherwise specified in the Notice of Intent and/or accompanying plans, all plantings and seed mixes shall consist of native species only, shall emphasize the natural flora and be of proven value to local wildlife. All plantings and seeding shall be watered as necessary to ensure growth.

29.) It is the responsibility of the applicant to complete any review required by all agencies with jurisdiction over the activity that is the subject of the Order, and to procure all required permits or approvals. These reviews, permits and approvals may include but are not limited to the following:

- Review by the U.S. Army Corps of Engineers for any Category 2 or Individual Permit Activity, and procurement of any permits or approvals identified by the Corps.
- Review by the Department of Environmental Protection (the "DEP") and procurement of any permits or approvals identified by the DEP.
- Review by the Massachusetts Natural Heritage and Endangered Species Program for any projects within estimated and/or priority habitat and any permits or approvals identified by the program.
- Review by local planning boards, boards of health, zoning boards, and building inspectors, and procurement of any permits or approvals required by these boards or agencies.

30.) Delineation flags and/or markers shall not be moved and/or removed and shall remain until a Certificate of Compliance is issued.

31.) At no time shall sediments be allowed to flow into or accumulate in any wetland or resource area on or off the property.

32.) Any material placed in any resource area without specific authorization under the Order shall be removed immediately upon demand of the Conservation Commission or its Coordinator. ***This condition is ongoing and does not expire upon completion of this project or the issuance of a Certificate of Compliance.*** Activities prohibited within any resource area and their buffer zones:

- operation of equipment, storage of materials, stockpiling of soil, or other site disturbance;
- stockpiling of debris, aggregate, fill, excavated material, construction material and building material; it shall also be stockpiled far enough away to prevent sediment from entering any wetland resource area;
- burying or disposal of debris or any other materials, other than that fill which may be allowed by the Order and as shown on the approved Plans herein;
- underground storage of fuel or other hazardous substances;

- dumping of leaves, grass clippings, brush, stumps, construction and yard debris or materials of any kind, unless expressly permitted by the Order or the Plans approved herein;
- refueling, servicing, and repair of motorized construction vehicles. Equipment operators shall be prepared to immediately respond to accidental releases of fuel, motor oil, and other liquids through containment. If any release of fuel, motor oil, lubricating oils, etc. occurs, the applicant and other responsible parties, in addition to all obligations under GL c. 21E (Massachusetts Oil and Hazardous Material Release Prevention and Response Act) and the Massachusetts Contingency Plan (MCP), shall immediately notify the Department of Environmental Protection's Western Regional Office at 1-413-784-1100. Any response action or cleanup shall be conducted pursuant to GL c. 21E and the MCP.
- use of pesticides, herbicides, fungicides, fertilizers or any other chemicals. Organic pesticides, herbicides, fungicides and fertilizers may be used subject to the review and approval of the Conservation Commission.
- use of de-icing chemicals (e.g. sodium, potassium, and calcium chloride) on driveways located in wetland resource areas and buffer zones. Optional: an environmentally friendly material as approved by the Commission may be used.

33.) The Order shall be included with all construction-related documents. All contractors working at the site shall be made aware of the provisions contained within the Order and adhere to all Special Conditions herein. At all times, the site foreman, supervision engineer or construction manager shall have a copy of the Order at the site and direct compliance with the requirements of the Order.

34.) The Order authorizes only the activity described on the approved Plans and approved documents referenced in the Order. No future work of any kind, including but not limited to site grading, clearing, or cutting of vegetation, installation of fences, storage shed, yard or garden sheds, above-ground or in-ground swimming pools and related buildings, or any other structure not specifically addressed by this filing shall be allowed beyond the limit of work line as shown on the approved Plans. ***This condition is ongoing and does not expire upon completion of this project or the issuance of a Certificate of Compliance.***

35.) Any changes made to the approved Plans, unless otherwise specified in the Order, which will alter an area subject to protection under the Ordinance, shall require applicant to inquire of the Commission, in writing, whether the change is significant enough to require the filing of a new Notice of Intent.

36.) The applicant and any person involved in the activity that is the subject of the Order shall notify the Commission or its Coordinator immediately upon discovery of any matter related to the Order that may affect any area within the jurisdiction of the Commission.

37.) Whether from on-site or off-site, any fill used in connection with this project shall be clean granular material essentially free of masonry, stumps, frozen clumps of earth, wood, trees branches, trash and waste material.

38.) Any water released as a result of this project shall make use of a temporary stilling/detention pond or similar method to remove sediment prior to release from the site.

39.) In the event that this property/project is sold or conveyed, the new owner(s) shall meet with the Conservation Commission or its Coordinator prior to commencing or continuing any work permitted by this order.

40.) Unless another limit of work line has been noted on the Plans and approved by the Commission, the geotextile/sedimentation/siltation barriers shall constitute a limit-of-work. ***Under no circumstances is any work allowed to take place on the down-gradient side (the wetland/resource side) of the limit of work. This includes stockpiling of any and all materials, vegetation waste and extra erosion controls.***

41.) All sedimentation and erosion controls shall be maintained in proper functioning condition until all disturbed areas have been stabilized with final vegetative cover or until the Commission or its Coordinator has determined that the control measures are no longer necessary. Structural failure of erosion and sedimentation controls required by the Order can constitute a violation of the Order, and can result in enforcement actions and fines from the Commission and possibly other regulatory agencies.

42.) The areas of construction shall remain in a stable condition at the close of each construction day. Erosion control measures shall be inspected at this time, and maintained or reinforced as necessary. All such devices shall be inspected, cleaned or replaced during construction and shall remain in place until such time as stabilization of all areas that may impact resource areas is permanent. These devices shall also be inspected to assure that the maximum control has been provided. Any entrapped silt shall be removed to an area outside the buffer zone and resource areas, and maintained or reinforced as necessary. ***Erosion and sedimentation controls shall be continually monitored to ensure proper operation.***

43.) It is the responsibility of the applicant to ensure that erosion controls are inspected after every rainfall to assure that maximum control has been provided and to repair and replace them as necessary. The applicant shall also remove any sediments that accumulate at the erosion control line and shall properly dispose of those sediments outside all jurisdictional areas.

44.) The applicant shall immediately control or correct any erosion problems that occur at the site and shall also immediately notify the Commission, which reserves the right to require additional erosion and/or damage prevention controls it may deem necessary.

45.) Erosion control measures shall not be removed and shall remain intact until removal is approved by the Commission and/or the Coordinator. The sediment collected by these devices shall be removed and placed at an upland location and in a manner that will prevent its later erosion to any resource area.

46.) No disturbed areas or stockpiled materials shall be left unprotected or without sufficient erosion controls to ensure such materials will not cause any impacts to any wetland.

47.) If construction continues into Autumn and Winter months, all disturbed areas shall be graded, loamed and seeded prior to October 30, of each year.

48.) Unless expressly allowed elsewhere in the Order, during snow removal operations, snow shall not be piled or placed beyond the limit of work. Road salt shall not be used on any surfaces where surface drainage discharges into any wetland or buffer zone. ***This condition is ongoing and does not expire upon completion of this project or the issuance of a Certificate of Compliance.***

49.) Grading shall be accomplished so that runoff shall not be directed towards the property of others. This project shall not increase runoff, nor cause flood or storm damage, to abutters or the property of others.

50.) (exposed soils) To prevent erosion, soils exposed for periods greater than fourteen days (14) shall be stabilized with erosion control blanket or netting, or a covering of mulch, or a temporary cover of rye or other grass. Drainage ditches shall be hydro-seeded with a perennial grass mixture. Any stabilization materials such as jute netting shall be firmly anchored to prevent them from being washed from slopes by rain or flooding. Preference should be given to biodegradable materials. ***This condition is ongoing and does not expire upon completion of this project or the issuance of a Certificate of Compliance.***

II. PRIOR TO CONSTRUCTION (if applicable, also see Special Conditions under Section VI and the Ordinance Section):

51.) (SWPPP) **Prior to any work,** if the project involves 1 acre or more of disturbance, the applicant shall submit a Storm Water Pollution Prevention Plan (SWPPP) to the commission for approval by the coordinator. If additional information is requested by the coordinator, it shall be submitted prior to work commencing.

52.) (deed recording) **Prior to the initiation of any work**, the applicant shall submit to the Commission a receipt from the Hampden County Registry of Deeds of the recording of the Order.

53.) (DEP sign) **Prior to the initiation of any work**, the applicant shall display the DEP file number on a sign not less than 2 square feet or more than 3 square feet in size bearing the words "Massachusetts Department of Environmental Protection (or 'MassDEP') File Number: '*your permit number here*'". The sign shall be in a location visible to the general public.

54.) (deed restriction language) **Prior to the initiation of any work,** the applicant shall submit proof to the Commission that parcels abutting or containing wetland or resource areas as identified on the Plans have the following restrictions, and a covenant so noted on each deed.*

*See attached template for Declaration of Restrictions Pursuant to the Order

55.) (applicant letter of understanding) **Prior to the initiation of any work**, the applicant shall submit a letter of understanding to the Commission stating that he/she has received, read, understand and shall comply with the Order.

56.) (contractor letter of understanding) **Prior to the initiation of any work**, the contractor, site foreman and/or construction manager shall submit a letter of understanding to the Commission stating that they have received, read, understand and shall comply with the Order.

57.) (excavator copy of OOC) **Prior to the commencement of any earth moving activities**, whoever shall be employed to execute earth-moving activities must be provided a copy of the Order. Thereafter, they may be held responsible with the applicant and property owner for violations, and may be subject to penalties authorized by law and/or regulation for those violations.

58.) (construction sequence) **Prior to the initiation of any work**, if the construction sequence differs from a construction sequence presented in the Notice of Intent, or if a construction sequence was not included in the NOI, the applicant shall submit to the Commission for approval a construction sequence including erosion and sedimentation control installation, the construction of compensatory storage, all permanent and temporary detention/retention basins/areas, any replication areas and revegetation areas to be completed with supporting plans and details as appropriate.

59.) (EC's) **Prior to the initiation of any work**, unless otherwise agreed upon by the applicant and Commission or its Coordinator, all erosion control measures shall be constructed and installed as shown on the approved Plans. The erosion control specifications provided in the Notice of Intent and the erosion control provision in the Order will be the minimum standards for this project; additional measures may be required. ***No work shall begin until the Commission has inspected and approved of all erosion controls.***

60.) (pre-construction meeting) **Prior to the initiation of any work,** a pre-construction meeting shall be held (other than of an emergency nature) between the Commission and/or its Coordinator and the applicant and his/her environmental consultant, contractor, site foreman or construction manager. The applicant shall notify the Commission in writing the week before the desired meeting in order to arrange for a mutually agreed upon time and date. Prior to the agreed meeting date and time, all erosion control measures shall be installed as shown on the approved Plans unless otherwise agreed upon by the applicant and Commission.

61.) (emergency contact information) **Prior to initiation of any work**, emergency contact phone numbers, including cell phone numbers of the applicant, their environmental consultant, contractor, site foreman and construction manager shall be furnished to the Commission.

62.) (water quality cert) **Prior to the initiation of any work,** as per 314 CMR 9.00, the applicant shall submit to the Commission proof of Water Quality Certification compliance.

63.) (temporary basins) **Before the beginning of other site work**, temporary retention/detention basins may be constructed in order to trap and detain water and sediments.

III. DURING CONSTRUCTION:

64.) (No Salt Zone sign) Permanent signs designating NO SALT ZONE shall be displayed in prominent locations, easily read from the road, on all approaches to the site. ***This condition is ongoing and does not expire upon completion of this project or the issuance of a Certificate of Compliance.***

65.) (liquid fertilizer) No salts or salt compounds, liquid or solid chemical lawn fertilizers, pesticides, herbicides or chemical or petroleum dust control agents shall be applied within the area of statutory interest or anywhere that the surface drainage is discharged into and area of statutory interest. Also no petroleum or liquid or solid chemical storage is permitted in any area of statutory interest. ***This condition is ongoing and does not expire upon completion of this project or the issuance of a Certificate of Compliance.***

66.) (low flow) All work is to be done during low flow period from July 1 to February 28, unless the applicant receives a permit from the Army Corps of Engineers allowing work outside that timeframe.

IV. EROSION AND SEDIMENT CONTROL REQUIREMENTS:

67.) (straw bales only) **Hay bales are not permitted** – because of the propensity for hay bales to spread invasive species, only straw bales ("bales") shall be used.

68.) (installation of ECs) Sedimentation and erosion control measures shall be placed as shown on the approved Plans. Sedimentation and erosion control materials shall consist of:

a. A row of entrenched and staked siltation filter fabric fencing with one row of staked bales installed on up-gradient of the silt fencing.
b. All bales shall be weed-free, tightly against each other and shall be located no further than 12 inches from the down-gradient side of the silt fence barrier. Bales shall be bound with twine or wire, and shall be staked in place with 2 stakes per bale.
c. Siltation filter fabric fencing shall be no less than 15 inches high and shall be of sufficient porosity to pass detained water without allowing suspended sediments to pass through the fence. Excavated spoils from entrenching shall be deposited on the up-gradient side of the barrier.

69.) (stockpile of ECs) An adequate stockpile of erosion control materials shall be on site at all times for routine and emergency replacement and shall include materials to repair or replace

silt fences, straw bales, erosion control blankets, riprap, filter berms or other devices planned for use during construction.

70.) (avoid heavy rain) Site grading and construction shall be scheduled to avoid periods of heavy rainfall and periods of high surface water.

V. STORMWATER REQUIREMENTS

71.) (stormwater requirements) All construction and post-construction stormwater management shall be conducted in accordance with the Order, the Plan and supplemental documents submitted with the Notice of Intent and with the Department of Environmental Protection's Stormwater Management Policy.

VI. DEWATERING PROCEDURES:

72.) (dewatering monitor) All project dewatering shall be conducted under the supervision of an environmental control monitor. Unless an environmental monitor is required elsewhere under this Order, the dewatering monitor shall have at least 5 years experience in wetlands and compliance with the Act, and is subject to approval by the Commission.

73.) (dewatering) Dewatering activities shall be conducted as shown on the approved Plans and shall be monitored daily to ensure that sediment-laden water is appropriately settled prior to discharge toward the wetland resource areas. No discharge of water is allowed directly into an area subject to jurisdiction of the Act or Ordinance. If emergency dewatering requirements arise, the applicant shall submit a contingency plan to the Commission for approval, which provides for the pumped water to be contained in a settling basin, to reduce turbidity prior to discharge into a resource area.

74.) (discharge prohibition) The Order specifically prohibits the discharge of untreated water into, upon, across or over any resource areas and/or buffer zones. Upstream surface water routed around the construction sites shall be reintroduced downstream of the construction sites and directly into the main channel of the brook/stream/river. Said discharge shall occur onto temporary stone pads place upon the substrate of said channel. Any free water removed from the construction sites shall be routed through a mobile weir tank or its equivalent, as approved by the Commission. Final discharge of free water from the construction sites shall occur into a temporary "sedimentation basin" within an upland area as approved by the Commission.

VII. UPON COMPLETION OF CONSTRUCTION:

75.) (permanent stabilization) Within 30 days of final grading, (or within 30 calendar days after the commencement of the following growing season if the project is completed after October 31st), all disturbed areas shall be permanently stabilized with rapidly growing cover and a minimum of 4 to 6 inches of organic topsoil and a USDA Natural Resources Conservation Service-approved native seed mixture should be used in accordance with the measures outlined in "Vegetative Practices in Site Development: Massachusetts

Conservation Guide, Volume II," or other acceptable stabilization method to assure long-term stabilization of disturbed areas. Maintenance of these areas shall be in a manner that assures permanent stabilization and precludes any soil erosion and shall be the responsibility of the owner of record of the property or the responsibility of the applicant. ***This condition is ongoing and does not expire upon completion of this project or the issuance of a Certificate of Compliance***.

76.) (removal of erosion controls) Only upon completion of the project, when all soils are permanently stabilized and with approval by the Commission or its Coordinator shall all erosion controls be removed.

77.) (COC requirements) Upon completion of construction and final soil stabilization, the applicant shall submit the following to the Conservation Commission to request a Certificate of Compliance (COC):

- A Completed Request for a Certificate of Compliance form (WPA Form 8A).
- *IF* the project has any stormwater structure(s) requiring routine cleaning and/or maintenance, the applicant or current owner shall submit a signed agreement between the applicant or current owner and a company who has been contracted to clean and maintain such structures on the project.
- A written statement from the applicant and/or the consultant affirming that all erosion controls have been removed and all disturbed areas are stabilized.
- As-Built plans signed and stamped by a registered professional engineer, architect, landscape architect or land surveyor and a written statement from such professional certifying substantial compliance with the Plans and describing what deviation, if any, exists from the Plans approved in the Order. This plan shall include at a minimum:
  - All wetland resource area boundaries with associated buffer zones and regulatory setback areas taken from the plan(s) approved in the Order;
  - Locations and elevations of all stormwater management conveyances, structures and best management designs, including foundation drains, constructed under the Order within any wetland resource area or buffer zone;
  - Distances from any structures constructed under the Order to wetland resource areas - "structures" include, but are not limited to, all buildings, septic system components, wells, utility lines, fences, retaining walls, and roads/driveways;
  - A line delineating the limit of work - "work" includes any filling, excavating and/or disturbance of soils or vegetation approved under the Order;
  - Wetland resource replication areas constructed under the Order.

VIII. THE FUTURE OF THESE ORDERS:

78.) (conditions in perpetuity) The following conditions will remain in force in perpetuity and not extinguished by the issuance of a Certificate of Compliance: 32, 34, 48, 50, 72, 73, and 107

NOTE: See also special conditions relative to the Westfield Wetlands Protection Ordinance on next page.

THE FOLLOWING CONDITIONS ARE ONLY APPLICABLE UNDER THE CITY OF WESTFIELD WETLAND PROTECTION ORDINANCE:

79.) (bond) **Prior to the initiation of any work**, a cash bond (check is acceptable) shall be submitted to the Treasurer of the City of Westfield in the amount of ten thousand dollars ($10,000.00). Said bond shall be conditioned on the completion of all conditions hereof, shall be signed by a party or parties satisfactory to the Westfield Conservation Commission. Bond release shall be contingent on requesting and receiving a Certificate of Compliance, if provisions satisfactory to the Commission have been made for any conditions in perpetuity.

City of Westfield, Massachusetts
Treasurer

Order of Conditions /Bond Information Requested

Instructions: Fill in your project information below (PLEASE PRINT) and bring this Bond Information Request with you when you post your cash bond.

Date: _____

DEP File Number: _____

Applicant: _____

Home Address: _____

_____

Project Location: _____

Social Security Number (For Individual Projects): _____

Federal Identification Number (For Corporate Projects): _____

CITY OF WESTFIELD
59 COURT STREET
WESTFIELD, MA 01085

DECLARATION OF RESTRICTIONS
PURSUANT TO ORDER OF CONDITIONS as referenced in MassDEP File #333-836

KNOW ALL MEN BY THESE PRESENTS, THAT I/We _____ of _____ are the owners of a certain parcel of land situated at _____, Westfield, MA 01085, and shown as Lots _____ on a Plan of Land in Westfield, MA, and recorded in the Hampden County Registry of Deeds, Plan Book _____, Page _____ and more particularly described in a deed from _____ to the above referenced owners, dated _____, and recorded in said Registry of Deeds in Book _____, Page _____.

WHEREAS, a portion of the owners property is subject to the provisions of the Massachusetts Wetlands Protection Act;

WHEREAS, the owners have filed with the Westfield Conservation Commission a Notice of Intent (hereinafter "NOI");

WHEREAS, the Westfield Conservation Commission has issued an Order of Conditions (DEP File #333-_____).

NOW THEREFORE, in consideration of the issuance of an Order of Conditions pursuant to the provisions of the Massachusetts Wetlands Protection Act, I/We agree as follows:

1. This lot contains certain areas or abuts areas protected by M.G.L. Chapter 131, Section 40 known as the Massachusetts Wetlands Protection Act and/or the City of

Westfield's Wetland Protection Ordinance. Therefore, no person shall remove, fill, dredge or alter any bank, riverfront area, fresh water wetland, coastal wetland, beach, dune, flat, marsh, meadow or swamp bordering on the ocean or on any estuary, creek, river, stream, pond, or lake, or any land under said waters or any land subject to tidal action, coastal storm flowage, or flooding, without the specific approval of the Westfield Conservation Commission.

2. The foregoing restriction shall be binding on our grantees, heirs, devisees, executors, administrators, assigns, and successors in interest and this restriction shall be a covenant and condition that runs with the land.

WITNESS my/our hand(s) and seal(s) this _____ day of _____, 2023.

_____
(Owner's Signature)

_____
(Owner's Signature)

COMMONWEALTH OF MASSACHUSETTS

Hampden, ss. _____, 2023

On this _____ day of _____, 2023, before me, the undersigned notary public, personally appeared _____ (Name of Document signer), proved to me through satisfactory evidence of identification, which were _____ (type of ID) to be the person whose name is signed on the preceding or attached document, and acknowledged to me that he/she/they signed it voluntarily for its stated purpose.

_____
Notary Public
My Commission Expires:_____

NPDES CGP from Construction

National Pollutant Discharge Elimination System (NPDES)
Construction General Permit (CGP) for Stormwater Discharges from Construction Activities

In compliance with the provisions of the Clean Water Act, 33 U.S.C. §1251 et. seq., (hereafter CWA), as amended by the Water Quality Act of 1987, P.L. 100-4, "operators" of construction activities (defined in Appendix A) that meet the requirements of Part 1.1 of this National Pollutant Discharge Elimination System (NPDES) Construction General Permit (CGP), are authorized to discharge pollutants in accordance with the effluent limitations and conditions set forth herein. Permit coverage is required from the "commencement of construction activities" (see Appendix A) until one of the conditions for terminating CGP coverage has been met (see Part 8.2).

This permit becomes effective on 12:00 am, February 17, 2022.

This permit and the authorization to discharge expire at 11:59pm, February 16, 2027.

Signed and issued this 18 day of January 2022

DEBORAH SZARO
Digitally signed by DEBORAH SZARO
Date: 2022.01.18 08:31:14 -05'00'

Deborah Szaro,
Acting Regional Administrator, EPA Region 1.

Signed and issued this 18 day of January 2022

JAVIER LAUREANO
Digitally signed by JAVIER LAUREANO
Date: 2022.01.18 11:21:16 -05'00'

Javier Laureano,
Director, Water Division, EPA Region 2.

Signed and issued this 18 day of January 2022

CARMEN GUERRERO PEREZ
Digitally signed by CARMEN GUERRERO PEREZ
Date: 2022.01.18 10:19:51 -04'00'

Carmen Guerrero-Perez,
Director, Caribbean Environmental Protection Division, EPA Region 2.

Signed and issued this 18 day of January 2022

CATHERINE LIBERTZ
Digitally signed by CATHERINE LIBERTZ
Date: 2022.01.18 12:05:24 -05'00'

Catherine A. Libertz,
Director, Water Division, EPA Region 3.

Signed and issued this 18 day of January 2022

JEANEANNE GETTLE
Digitally signed by JEANEANNE GETTLE
Date: 2022.01.18 13:09:48 -05'00'

Jeaneanne Gettle,
Director, Water Division, EPA Region 4.

Signed and issued this 18 day of January 2022

Digitally signed by TERA FONG
Date: 2022.01.18 13:03:49 -06'00'

Tera Fong,
Director, Water Division, EPA Region 5.

Signed and issued this 18 day of January 2022

CHARLES MAGUIRE
Digitally signed by CHARLES MAGUIRE
DN: c=US, o=U.S. Government, ou=Environmental Protection Agency, cn=CHARLES MAGUIRE, 0.9.2342.19200300.100.1.1=68001003650036
Date: 2022.01.18 14:06:55 -06'00'

Charles W. Maguire,
Director, Water Division, EPA Region 6.

Signed and issued this 18 day of January 2022

JEFFERY ROBICHAUD
Digitally signed by JEFFERY ROBICHAUD
Date: 2022.01.18 14:41:37 -06'00'

Jeffery Robichaud,
Director, Water Division, EPA Region 7.

Signed and issued this 18 day of January 2022

DARCY OCONNOR
Digitally signed by DARCY OCONNOR
Date: 2022.01.18 14:00:05 -07'00'

Darcy O'Connor,
Director, Water Division, EPA Region 8.

Signed and issued this 18 day of January 2022

TOMAS TORRES
Digitally signed by TOMAS TORRES
Date: 2022.01.18 13:30:16 -08'00'

Tomás Torres,
Director, Water Division, EPA Region 9.

Signed and issued this 18 day of January 2022

DANIEL OPALSKI
Digitally signed by DANIEL OPALSKI
Date: 2022.01.18 15:10:20 -08'00'

Daniel D. Opalski,
Director, Water Division, EPA Region 10.

CONTENTS

1 How to Obtain Coverage Under the Construction General Permit (CGP) 1
1.1 Eligibility Conditions 1
1.2 Types of Discharges Authorized 3
1.3 Prohibited Discharges 4
1.4 Submitting your Notice of Intent (NOI) 5
1.5 Requirement to Post a Notice of Your Permit Coverage 7
2 Technology-Based Effluent Limitations 8
2.1 General Stormwater Control Design, Installation, and Maintenance Requirements 8
2.2 Erosion and Sediment Control Requirements 10
2.3 Pollution Prevention Requirements 17
2.4 Construction Dewatering Requirements 22
3 Water Quality-Based Effluent Limitations 23
3.1 General Effluent Limitation to Meet Applicable Water Quality Standards 23
3.2 Water Quality-based Conditions for Sites Discharging to Sensitive Waters[44] 23
3.3 Water quality-based conditions For sites discharging To Sensitive Waters From Construction Dewatering activities 24
4 Site Inspection Requirements 28
4.1 Person(s) Responsible for Inspecting Site 28
4.2 Frequency of Inspections 28
4.3 Increase in Inspection Frequency for Certain Sites. 29
4.4 Reductions in Inspection Frequency 30
4.5 Areas that Must Be Inspected 31
4.6 Requirements for Inspections 32
4.7 Inspection Report 33
4.8 Inspections By EPA 34
5 Corrective Actions 34
5.1 Conditions Triggering Corrective Action 34
5.2 Corrective Action Deadlines 35
5.3 Corrective Action Required by EPA 36
5.4 Corrective Action Log 36
6 Stormwater Team Formation/ Staff Training Requirements 36
6.1 Stormwater Team 36
6.2 General Training Requirements For Stormwater Team Members 37
6.3 Training Requirements For Persons Conducting Inspections 37
6.4 Stormwater Team's Access To Permit Documents 38

7 Stormwater Pollution Prevention Plan (SWPPP) 38
7.1 General Requirements 38
7.2 SWPPP Contents 38
7.3 On-Site Availability of Your SWPPP 46
7.4 SWPPP Modifications 46
8 How to Terminate Coverage 47
8.1 Minimum Information Required in NOT 47
8.2 Conditions for Terminating CGP Coverage 47
8.3 How to Submit Your NOT 48
8.4 Deadline for Submitting the NOT 49
8.5 Effective Date of Termination of Coverage 49
9 Permit Conditions Applicable to Specific States, Indian Country Lands, or Territories 49
Appendix A: Definitions A-1
Appendix B: Permit Areas Eligible for Coverage and EPA Regional Addresses B-1
Appendix C: Small Construction Waivers and Instructions C-1
Appendix D: Eligibility Procedures Relating to Threatened & Endangered Species Protection. D-1
Appendix E: Historic Property Screening Process E-1
Appendix F: Buffer Requirements F-1
Appendix G: Standard Permit Conditions G-1
Appendix H: Notice of Intent (NOI) Form and Instructions H-1
Appendix I: Notice of Termination (NOT) Form and Instructions I-1
Appendix J: Suggested Format for Request for Chemical Treatment J-1
Appendix K: Turbidity Benchmark Monitoring Report Form K-1

1 HOW TO OBTAIN COVERAGE UNDER THE CONSTRUCTION GENERAL PERMIT (CGP)

To be covered under this permit, you must meet the eligibility conditions and follow the requirements for obtaining permit coverage in this Part.

1.1 ELIGIBILITY CONDITIONS

1.1.1 You are an "operator" of a construction site for which discharges will be covered under this permit. For the purposes of this permit and in the context of stormwater discharges associated with construction activity, an "operator" is any party associated with a construction project that meets either of the following two criteria:

a. The party has operational control over construction plans and specifications, including the ability to make modifications to those plans and specifications; or

b. The party has day-to-day operational control of those activities at a project that are necessary to ensure compliance with the permit conditions.

Where there are multiple operators associated with the same project, all operators must obtain permit coverage.[1] Subcontractors generally are not considered operators for the purposes of this permit.

1.1.2 Your site's construction activities:

a. Will disturb one or more acres of land, or will disturb less than one acre of land but are part of a common plan of development or sale (as defined in Appendix A) that will ultimately disturb one or more acres of land; or

b. Have been designated by EPA as needing permit coverage under 40 CFR § 122.26(a)(1)(v) or 40 CFR § 122.26(b)(15)(ii);

1.1.3 Your site is located in an area where EPA is the permitting authority and where coverage under this permit is available (see Appendix B);

1.1.4 Discharges from your site are not:

a. Already covered by a different NPDES permit for the same discharge; or

b. In the process of having coverage under a different NPDES permit for the same discharge denied, terminated, or revoked.[2, 3]

1.1.5 You can demonstrate you meet one of the criteria in the Endangered Species Protection section of the Notice of Intent (NOI) that you submit for coverage under this permit, per Part 1.4, with respect to the protection of Federally listed endangered or threatened species and Federally designated critical habitat under the Endangered Species Act

[1] If the operator of a "construction support activity" (see Part 1.2.1c) is different than the operator of the main site, that operator must also obtain permit coverage. See Part 7.1 for clarification on the sharing of permit-related functions between and among operators on the same site and for conditions that apply to developing a SWPPP for multiple operators associated with the same site.

[2] Parts 1.1.4a and 1.1.4b do not include sites currently covered under the 2017 CGP that are in the process of obtaining coverage under this permit, nor sites covered under this permit that are transferring coverage to a different operator.

[3] Notwithstanding a site being made ineligible for coverage under this permit because it falls under the description of Parts 1.1.4a or 1.1.4b, above, EPA may waive the applicable eligibility requirement after specific review if it determines that coverage under this permit is appropriate.

(ESA). If the EPA Regional Office grants you a waiver from electronic reporting per Part 1.4.2, you must complete the ESA worksheet in Appendix D to demonstrate you meet one of the criteria and submit it with your paper NOI (Appendix I).

1.1.6 You have completed the screening process in Appendix E relating to the protection of historic properties; and

1.1.7 You have complied with all requirements in Part 9 imposed by the applicable State, Indian Tribe, or Territory in which your construction activities and/or discharge will occur.

1.1.8 For "new sources" (as defined in Appendix A) only:

a. EPA has not, prior to authorization under this permit, determined that discharges from your site will not meet applicable water quality standards. Where such a determination is made prior to authorization, EPA may notify you that an individual permit application is necessary. However, EPA may authorize your coverage under this permit after you have included appropriate controls and implementation procedures designed to bring your discharge into compliance with this permit, specifically the requirement to meet water quality standards. In the absence of information demonstrating otherwise, EPA expects that compliance with the requirements of this permit, including the requirements applicable to such discharges in Part 3, will result in discharges that meet applicable water quality standards.

b. Discharges from your site to a Tier 2, Tier 2.5, or Tier 3 water[4] will not lower the water quality of the applicable water. In the absence of information demonstrating otherwise, EPA expects that compliance with the requirements of this permit, including the requirements applicable to such discharges in Part 3.2, will result in discharges that will not lower the water quality of such waters.

1.1.9 If you plan to add "cationic treatment chemicals" (as defined in Appendix A) to stormwater and/or authorized non-stormwater prior to discharge, you may not submit your NOI until you notify your applicable EPA Regional Office (see Appendix J) in advance and the EPA Regional Office authorizes coverage under this permit after you have included appropriate controls and implementation procedures designed to ensure that your use of cationic treatment chemicals will result in discharges that meet applicable water quality standards.

[4] Note: Your site will be considered to discharge to a Tier 2, Tier 2.5, or Tier 3 water if the first receiving water to which you discharge is identified by a State, Tribe, or EPA as a Tier 2, Tier 2.5, or Tier 3 water. For discharges that enter a storm sewer system prior to discharge, the first receiving water to which you discharge is the waterbody that receives the stormwater discharge from the storm sewer system. The current list of Tier 2, Tier 2.5, and Tier 3 waters located in the areas eligible for coverage under this permit can be found at https://www.epa.gov/npdes/construction-general-permit-resources-tools-and-templates. You can also use EPA's Discharge Mapping Tool (https://www.epa.gov/npdes/epas-stormwater-discharge-mapping-tools) to assist you in identifying whether any receiving waters to which you discharge are listed as impaired (and the pollutant for which it is impaired) and whether an approved total maximum daily load (TMDL) exists for that waterbody.

1.2 TYPES OF DISCHARGES AUTHORIZED[5]

1.2.1 The following stormwater discharges are authorized under this permit provided that appropriate stormwater controls are designed, installed, and maintained (see Parts 2 and 3):

- **a.** Stormwater discharges, including stormwater runoff, snowmelt runoff, and surface runoff and drainage, associated with construction activity under 40 CFR § 122.26(b)(14) or § 122.26(b)(15)(i);
- **b.** Stormwater discharges designated by EPA as needing a permit under 40 CFR §122.26(a)(1)(v) or § 122.26(b)(15)(ii);
- **c.** Stormwater discharges from on or off-site construction support activities (e.g., concrete or asphalt batch plants, equipment staging yards, material storage areas, excavated material disposal areas, borrow areas) provided that:
  - **i.** The support activity is directly related to the construction site required to have permit coverage for stormwater discharges;
  - **ii.** The support activity is not a commercial operation, nor does it serve multiple unrelated construction sites;
  - **iii.** The support activity does not continue to operate beyond the completion of the construction activity at the site it supports; and
  - **iv.** Stormwater controls are implemented in accordance with Part 2 and Part 3 for discharges from the support activity areas; and
- **d.** Stormwater discharges from earth-disturbing activities associated with the construction of staging areas and the construction of access roads conducted prior to active mining.

1.2.2 The following non-stormwater discharges associated with your construction activity are authorized under this permit provided that, with the exception of water used to control dust and to irrigate vegetation in stabilized areas, these discharges are not routed to areas of exposed soil on your site and you comply with any applicable requirements for these discharges in Parts 2 and 3:

- **a.** Discharges from emergency fire-fighting activities;
- **b.** Fire hydrant flushings;
- **c.** Landscape irrigation;
- **d.** Water used to wash vehicles and equipment, provided that there is no discharge of soaps, solvents, or detergents used for such purposes;
- **e.** Water used to control dust;
- **f.** Potable water including uncontaminated water line flushings;

[5] See "Discharge" as defined in Appendix A. Note: Any discharges not expressly authorized in this permit cannot become authorized or shielded from liability under CWA Section 402(k) by disclosure to EPA, State, or local authorities after issuance of this permit via any means, including the Notice of Intent (NOI) to be covered by the permit, the SWPPP, or during an inspection.

g. External building washdown, provided soaps, solvents, and detergents are not used, and external surfaces do not contain hazardous substances (as defined in Appendix A) (e.g., paint or caulk containing polychlorinated biphenyls (PCBs));

h. Pavement wash waters, provided spills or leaks of toxic or hazardous substances have not occurred (unless all spill material has been removed) and where soaps, solvents, and detergents are not used. You are prohibited from directing pavement wash waters directly into any receiving water, storm drain inlet, or constructed or natural site drainage features, unless the feature is connected to a sediment basin, sediment trap, or similarly effective control;

i. Uncontaminated air conditioning or compressor condensate;

j. Uncontaminated, non-turbid discharges of ground water or spring water;

k. Foundation or footing drains where flows are not contaminated with process materials such as solvents or contaminated ground water; and

l. Uncontaminated construction dewatering water[6] discharged in accordance with Part 2.4.

1.2.3 Also authorized under this permit are discharges of stormwater listed above in Part 1.2.1, or authorized non-stormwater discharges listed above in Part 1.2.2, commingled with a discharge authorized by a different NPDES permit and/or a discharge that does not require NPDES permit authorization.

1.3 PROHIBITED DISCHARGES[7]

The discharges listed in this Part are prohibited outright or authorized only under the identified conditions. To prevent the discharges in Parts 1.3.1 through 1.3.5, operators must comply with the applicable pollution prevention requirements in Part 2.3 or ensure the discharge is authorized by another NPDES permit consistent with Part 1.2.3 for commingled discharges.

1.3.1 Wastewater from washout of concrete, unless managed by an appropriate control as described in Part 2.3.4;

1.3.2 Wastewater from washout and/or cleanout of stucco, paint, form release oils, curing compounds, and other construction materials;

1.3.3 Fuels, oils, or other pollutants used in vehicle and equipment operation and maintenance;

1.3.4 Soaps, solvents, or detergents used in vehicle and equipment washing or external building washdown; and

1.3.5 Toxic or hazardous substances from a spill or other release.

[6] EPA notes that operators may need to comply with additional procedures to verify that the dewatering discharge is uncontaminated. Operators should review Part 9 to determine if any of these requirements apply to their discharge and should ensure that they have complied with any State, Tribal, or local dewatering requirements that apply.

[7] EPA includes these prohibited non-stormwater discharges here as a reminder to the operator that the only non-stormwater discharges authorized by this permit are at Part 1.2.2. Any unauthorized non-stormwater discharges must be covered under an individual permit or alternative general permit.

1.4 SUBMITTING YOUR NOTICE OF INTENT (NOI)

All "operators" (as defined in Appendix A) associated with your construction site who meet the Part 1.1 eligibility conditions, and who seek coverage under this permit, must submit to EPA a complete and accurate NOI in accordance with the deadlines in Table 1 prior to commencement of construction activities (as defined in Appendix A).

Exception: If you are conducting construction activities in response to a public emergency (e.g., mud slides, earthquake, extreme flooding conditions, widespread disruption in essential public services), and the related work requires immediate authorization to avoid imminent endangerment to human health, public safety, or the environment, or to reestablish essential public services, you may discharge on the condition that a complete and accurate NOI is submitted within 30 calendar days after commencing construction activities (see Table 1) establishing that you are eligible for coverage under this permit. You must also provide documentation in your Stormwater Pollution Prevention Plan (SWPPP) to substantiate the occurrence of the public emergency pursuant to Part 7.2.3i.

1.4.1 Prerequisite for Submitting Your NOI

You must develop a SWPPP consistent with Part 7 before submitting your NOI for coverage under this permit.

1.4.2 How to Submit Your NOI

You must use EPA's NPDES eReporting Tool (NeT) to electronically prepare and submit your NOI for coverage under the 2022 CGP unless you received a waiver from your applicable EPA Regional Office.

To access NeT, go to https://cdx.epa.gov/cdx.

Waivers from electronic reporting may be granted based on one of the following conditions:

a. If your operational headquarters is physically located in a geographic area (i.e., ZIP code or census tract) that is identified as under-served for broadband Internet access in the most recent report from the Federal Communications Commission; or

b. If you have limitations regarding available computer access or computer capability.

If the EPA Regional Office grants you approval to use a paper NOI, and you elect to use it, you must complete the form in Appendix H.

1.4.3 Deadlines for Submitting Your NOI and Your Official Date of Permit Coverage

Table 1 provides the deadlines for submitting your NOI and the official start date of your permit coverage, which differ depending on when you commence construction activities.

Table 1 NOI Submittal Deadlines and Official Start Date for Permit Coverage.

Type of Operator	NOI Submittal Deadline[8]	Permit Authorization Date[9]
Operator of a new site (i.e., a site where construction activities commence on or after February 17, 2022)	At least 14 calendar days before commencing construction activities.	14 calendar days after EPA notifies you that it has received a complete NOI, unless EPA notifies you that your authorization is delayed or denied.
Operator of an existing site (i.e., a site with 2017 CGP coverage where construction activities commenced prior to February 17, 2022)	No later than May 18, 2022.	14 calendar days after EPA notifies you that it has received a complete NOI, unless EPA notifies you that your authorization is delayed or denied. Provided you submit your NOI no later than May 18, 2022, your authorization under the 2017 CGP is automatically continued until you have been granted coverage under this permit or an alternative NPDES permit, or coverage is otherwise terminated.
New operator of a permitted site (i.e., an operator that through transfer of ownership and/or operation replaces the operator of an already permitted construction site that is either a "new site" or an "existing site")	At least 14 calendar days before the date the transfer to the new operator will take place.	14 calendar days after EPA notifies you that it has received a complete NOI, unless EPA notifies you that your authorization is delayed or denied.
Operator of an "emergency-related project" (i.e., a project initiated in response to a public emergency (e.g., mud slides, earthquake, extreme flooding conditions, disruption in essential public services), for which the related work requires immediate authorization to avoid imminent endangerment to human health or the environment, or to reestablish essential public services)	No later than 30 calendar days after commencing construction activities.	You are considered provisionally covered under the terms and conditions of this permit immediately, and fully covered 14 calendar days after EPA notifies you that it has received a complete NOI, unless EPA notifies you that your authorization is delayed or denied.

[8] If you miss the deadline to submit your NOI, any and all discharges from your construction activities will continue to be unauthorized under the CWA until they are covered by this or a different NPDES permit. EPA may take enforcement action for any unpermitted discharges that occur between the commencement of construction activities and discharge authorization.

[9] Discharges are not authorized if your NOI is incomplete or inaccurate or if you are not eligible for permit coverage.

1.4.4 Modifying your NOI

If after submitting your NOI you need to correct or update any fields, you may do so by submitting a "Change NOI" form using NeT. Waivers from electronic reporting may be granted as specified in Part 1.4.2. If the EPA Regional Office has granted you approval to submit a paper NOI modification, you may indicate any NOI changes on the same NOI form in Appendix H.

When there is a change to the site's operator, the new operator must submit a new NOI, and the previous operator must submit a Notice of Termination (NOT) form as specified in Part 8.3.

The following modifications to an NOI form will result in a 14-day review process:

- Changes to the name of the operator;
- Changes to the project or site name;
- Changes to the estimated area to be disturbed;
- Changes to the name of the receiving water[10], or additions to the applicable receiving waters;
- Changes to eligibility information related to endangered species protection or historic preservation;
- Changes to information provided related to the use of chemical treatment at your site; and
- Changes to answers provided regarding the demolition of structures over 10,000 square feet of floor space built or renovated before January 1, 1980.

During the 14-day review process, you may continue to operate based on the information provided in your original NOI, but you must wait until the review period has ended before you may commence or continue activities on any portion of your site that would be affected by any of the above modifications, unless EPA notifies you that the authorization is delayed or denied.

1.4.5 Your Official End Date of Permit Coverage

Once covered under this permit, your coverage will last until the date that:

a. You terminate permit coverage consistent with Part 8; or

b. You receive permit coverage under a different NPDES permit or a reissued or replacement version of this permit after expiring on February 16, 2027; or

c. You fail to submit an NOI for coverage under a reissued or replacement version of this permit before the deadline for existing construction sites where construction activities continue after this permit has expired.

1.5 REQUIREMENT TO POST A NOTICE OF YOUR PERMIT COVERAGE

You must post a sign or other notice of your permit coverage at a safe, publicly accessible location in close proximity to the construction site. The notice must be located so it is visible from the public road that is nearest to the active part of the construction

[10] As defined in Appendix A, a "receiving water" is "a "Water of the United States" as defined in 40 CFR §122.2 into which the regulated stormwater discharges.

site, and it must use a font large enough to be readily viewed from a public right-of-way.[11] At a minimum, the notice must include:

a. The NPDES ID (i.e., permit tracking number assigned to your NOI and the EPA webpage where a copy of the NOI can be found (https://permitsearch.epa.gov/epermit-search/ui/search));

b. A contact name and phone number for obtaining additional construction site information;

c. The Uniform Resource Locator (URL) for the SWPPP (if available), or the following statement: "If you would like to obtain a copy of the Stormwater Pollution Prevention Plan (SWPPP) for this site, contact the EPA Regional Office at [*include the appropriate CGP Regional Office contact information found at* https://www.epa.gov/npdes/contact-us-stormwater#regional];" and

d. The following statement "If you observe indicators of stormwater pollutants in the discharge or in the receiving water, contact the EPA through the following website: https://www.epa.gov/enforcement/report-environmental-violations."

2 TECHNOLOGY-BASED EFFLUENT LIMITATIONS

You must comply with the following technology-based effluent limitations in this Part for all authorized discharges.[12]

2.1 GENERAL STORMWATER CONTROL DESIGN, INSTALLATION, AND MAINTENANCE REQUIREMENTS

You must design, install, and maintain stormwater controls required in Parts 2.2, 2.3, and 2.4 to minimize the discharge of pollutants in stormwater from construction activities.[13] To meet this requirement, you must:

2.1.1 Account for the following factors in designing your stormwater controls:

a. The expected amount, frequency, intensity, and duration of precipitation;[14]

b. The nature of stormwater runoff (i.e., flow) and run-on at the site, including factors such as expected flow from impervious surfaces, slopes, and site drainage features. You must design stormwater controls to control stormwater volume, velocity, and peak flow rates to minimize discharges of pollutants in stormwater and to minimize channel and streambank erosion and scour in the immediate vicinity of discharge points; and

c. The soil type and range of soil particle sizes expected to be present on the site.

[11] If the active part of the construction site is not visible from a public road, then place the notice of permit coverage in a position that is visible from the nearest public road and as close as possible to the construction site.

[12] For each of the effluent limits in Part 2, as applicable to your site, you must include in your SWPPP (1) a description of the specific control(s) to be implemented to meet the effluent limit; (2) any applicable design specifications; (3) routine maintenance specifications; and (4) the projected schedule for installation/implementation. See Part 7.2.6.

[13] The permit does not recommend or endorse specific products or vendors.

[14] Stormwater controls must be designed using the most recent data available to account for recent precipitation patterns and trends.

If your site is exposed to or has previously experienced major storms, such as hurricanes, storm surge, extreme/heavy precipitation, and flood events, you should also include consideration of and contingencies for whether implementing structural improvements, enhanced/resilient stormwater controls, and other mitigation measures may help minimize impacts from stormwater discharges from such major storm events.

2.1.2 Design and install all stormwater controls in accordance with good engineering practices, including applicable design specifications.[15]

2.1.3 Complete installation of stormwater controls by the time each phase of construction activities has begun.

a. By the time construction activity in any given portion of the site begins, install and make operational any downgradient sediment controls (e.g., buffers, perimeter controls, exit point controls, storm drain inlet protection) that control discharges from the initial site clearing, grading, excavating, and other earth-disturbing activities.[16]

b. Following the installation of these initial controls, install and make operational all stormwater controls needed to control discharges prior to subsequent earth-disturbing activities.

2.1.4 Ensure all stormwater controls are maintained and remain in effective operating condition during permit coverage and are protected from activities that would reduce their effectiveness.

a. Comply with any specific maintenance requirements for the stormwater controls listed in this permit, as well as any recommended by the manufacturer.[17]

b. If at any time you find that a stormwater control needs routine maintenance (i.e., minor repairs or other upkeep performed to ensure the site's stormwater controls remain in effective operating condition, not including significant repairs or the need to install a new or replacement control), you must immediately initiate the needed work, and complete such work by the close of the next business day. If it is infeasible to complete the routine maintenance by the close of the next business day, you must document why this is the case and why the repair or other upkeep to be performed should still be considered routine maintenance in your inspection report under Part 4.7.1c and complete such work no later than seven (7) calendar days from the time of discovery of the condition requiring maintenance.

c. If you must repeatedly (i.e., three (3) or more times) make the same routine maintenance fixes to the same control at the same location, even if the fix can be completed by the close of the next business day, you must either:

i. Complete work to fix any subsequent repeat occurrences of this same problem under the corrective action procedures in Part 5, including keeping any records

[15] Design specifications may be found in manufacturer specifications and/or in applicable erosion and sediment control manuals or ordinances. Any departures from such specifications must reflect good engineering practices and must be explained in your SWPPP. You must also comply with any additional design and installation requirements specified for the effluent limits in Parts 2.2, 2.3, and 2.4.

[16] Note that the requirement to install stormwater controls prior to each phase of construction activities for the site does not apply to the earth disturbance associated with the actual installation of these controls. Operators should take all reasonable actions to minimize the discharges of pollutants during the installation of stormwater controls.

[17] Any departures from such maintenance recommendations made by the manufacturer must reflect good engineering practices and must be explained in your SWPPP.

of the condition and how it was corrected under Part 5.4; or

ii. Document in your inspection report under Part 4.7.1c why the specific reoccurrence of this same problem should still be addressed as a routine maintenance fix under this Part.[18]

d. If at any time you find that a stormwater control needs a significant repair or that a new or replacement control is needed, you must comply with the corrective action deadlines for completing such work in in Part 5.2.1c.

2.2 EROSION AND SEDIMENT CONTROL REQUIREMENTS

You must implement erosion and sediment controls in accordance with the following requirements to minimize the discharge of pollutants in stormwater from construction activities.

2.2.1 Provide and maintain natural buffers and/or equivalent erosion and sediment controls for discharges to any receiving waters that is located within 50 feet of the site's earth disturbances.

a. Compliance Alternatives. For any discharges to receiving waters located within 50 feet of your site's earth disturbances, you must comply with one of the following alternatives:

i. Provide and maintain a 50-foot undisturbed natural buffer; or

ii. Provide and maintain an undisturbed natural buffer that is less than 50 feet and is supplemented by erosion and sediment controls that achieve, in combination, the sediment load reduction equivalent to a 50-foot undisturbed natural buffer; or

iii. If infeasible to provide and maintain an undisturbed natural buffer of any size, implement erosion and sediment controls to achieve the sediment load reduction equivalent to a 50-foot undisturbed natural buffer.

See Appendix F, Part F.2 for additional conditions applicable to each compliance alternative.

b. Exceptions. See Appendix F, Part F.2 for exceptions to the compliance alternatives.

2.2.2 Direct stormwater to vegetated areas and maximize stormwater infiltration and filtering to reduce pollutant discharges, unless infiltration would be inadvisable due to the underlying geology (e.g., karst topography) and ground water contamination concerns, or infeasible due to site conditions.[19]

[18] Such documentation could include, for example, that minor repairs completed within the required timeframe are all that is necessary to ensure that the stormwater control continues to operate as designed and installed and that the stormwater control remains appropriate for the flow reaching it.

[19] Operators should consider whether factors such as specific contaminant concerns from the construction site, the underlying soils or geology, hydrology, depth to the ground water table, or proximity to source water or wellhead protection area(s) make the site unsuitable for infiltrating construction stormwater. Site conditions that may be of particular concern include proximity to: a current or future drinking water aquifer; a drinking water well or spring (including private/household wells); highly conductive geology such as karst; known pollutant hot spots, such as hazardous waste sites, landfills, gas stations, brownfields; an on-site sewage system or underground storage tank; or soils that do not allow for infiltration. Operators may find it helpful to consult EPA's Drinking Water Mapping Application to Protect Source Waters (DWMAPS). DWMAPS is an online mapping tool that can be used to locate drinking water providers, potential sources of contamination, polluted waterways, and information on protection initiatives in the site area.

2.2.3 Install sediment controls along any perimeter areas of the site that are downslope from any exposed soil or other disturbed areas.[20]

a. The perimeter control must be installed upgradient of any natural buffers established under Part 2.2.1, unless the control is being implemented pursuant to Part 2.2.1a.ii-iii;

b. To prevent stormwater from circumventing the edge of the perimeter control, install the perimeter control on the contour of the slope and extend both ends of the control up slope (e.g., at 45 degrees) forming a crescent rather than a straight line;

c. After installation, to ensure that perimeter controls continue to work effectively:

i. Remove sediment before it has accumulated to one-half of the above-ground height of any perimeter control; and

ii. After a storm event, if there is evidence of stormwater circumventing or undercutting the perimeter control, extend controls and/or repair undercut areas to fix the problem.

d. **Exception**. For areas at "linear construction sites" (as defined in Appendix A) where perimeter controls are infeasible (e.g., due to a limited or restricted right-of-way), implement other practices as necessary to minimize pollutant discharges to perimeter areas of the site.

2.2.4 Minimize sediment track-out.

a. Restrict vehicle use to properly designated exit points;

b. Use appropriate stabilization techniques[21] at all points that exit onto paved roads;

i. **Exception**: Stabilization is not required for exit points at linear utility construction sites that are used only episodically and for very short durations over the life of the project, provided other exit point controls[22] are implemented to minimize sediment track-out;

c. Implement additional track-out controls[23] as necessary to ensure that sediment removal occurs prior to vehicle exit; and

d. Where sediment has been tracked-out from your site onto paved roads, sidewalks, or other paved areas outside of your site, remove the deposited sediment by the end of the same business day in which the track-out occurs or by the end of the next business day if track-out occurs on a non-business day. Remove the track-out by sweeping, shoveling, or vacuuming these surfaces, or by using other similarly effective means of sediment removal. You are prohibited from hosing or sweeping tracked-out

[20] Examples of perimeter controls include filter berms; different types of silt fence such as wire-backed silt fence, super silt fence, or multi-layer geotextile silt fence; compost filter socks; gravel barriers; and temporary diversion dikes.

[21] Examples of appropriate stabilization techniques include the use of aggregate stone with an underlying geotextile or non-woven filter fabric, and turf mats.

[22] Examples of other exit point controls include preventing the use of exit points during wet periods; minimizing exit point use by keeping vehicles on site to the extent possible; limiting exit point size to the width needed for vehicle and equipment usage; using scarifying and compaction techniques on the soil; and avoiding establishing exit points in environmentally sensitive areas (e.g., *karst areas; steep slopes)*.

[23] Examples of additional track-out controls include the use of wheel washing, rumble strips, and rattle plates.

sediment into any constructed or natural site drainage feature, storm drain inlet, or receiving water.[24]

2.2.5 Manage stockpiles or land clearing debris piles composed, in whole or in part, of sediment and/or soil:[25]

a. Locate the piles outside of any natural buffers established under Part 2.2.1 and away from any constructed or natural site drainage features, storm drain inlets, and areas where stormwater flow is concentrated;

b. Install a sediment barrier along all downgradient perimeter areas of stockpiled soil or land clearing debris piles;[26]

c. For piles that will be unused for 14 or more days, provide cover[27] or appropriate temporary stabilization (consistent with Part 2.2.14);

d. You are prohibited from hosing down or sweeping soil or sediment accumulated on pavement or other impervious surfaces into any constructed or natural site drainage feature, storm drain inlet, or receiving water.

2.2.6 Minimize dust. On areas of exposed soil, minimize dust through the appropriate application of water or other dust suppression techniques to control the generation of pollutants that could be discharged in stormwater from the site.

2.2.7 Minimize steep slope disturbances. Minimize the disturbance of "steep slopes" (as defined in Appendix A).[28]

2.2.8 Preserve native topsoil, unless infeasible.[29]

2.2.9 Minimize soil compaction.[30] In areas of your site where final vegetative stabilization will occur or where infiltration practices will be installed:

---

[24] Fine grains that remain visible (e.g., staining) on the surfaces of off-site streets, other paved areas, and sidewalks after you have implemented sediment removal practices are not a violation of Part 2.2.4.

[25] The requirements in Part 2.2.5 do not apply to the storage of rock, such as rip rap, landscape rock, pipe bedding gravel, and boulders. Refer to Part 2.3.3a for the requirements that apply to these types of materials.

[26] Examples of sediment barriers include berms, dikes, fiber rolls, silt fences, sandbags, gravel bags, or straw bale.

[27] Examples of cover include tarps, blown straw and hydroseeding.

[28] Where disturbance to steep slopes cannot be avoided, operators should consider implementing controls suitable for steep slope disturbances that are effective at minimizing erosion and sediment discharge (e.g., preservation of existing vegetation, hydraulic mulch, geotextiles and mats, compost blankets, earth dikes or drainage swales, terraces, velocity dissipation devices). To identify slopes and soil types that are of comparatively higher risk for sediment discharge in areas of the country where the CGP is in effect, operators can use the tables in Appendix F (see Tables F-2 thru F-6).

[29] Stockpiling topsoil at off-site locations, or transferring topsoil to other locations, is an example of a practice that is consistent with the requirements in Part 2.2.8. Preserving native topsoil is not required where the intended function of a specific area of the site dictates that the topsoil be disturbed or removed. For example, some sites may be designed to be highly impervious after construction, and therefore little or no vegetation is intended to remain, or may not have space to stockpile native topsoil on site for later use, in which case it may not be feasible to preserve topsoil.

[30] Minimizing soil compaction is not required where the intended function of a specific area of the site dictates that it be compacted.

a. Restrict vehicle and equipment use in these locations to avoid soil compaction; and

b. Before seeding or planting areas of exposed soil that have been compacted, use techniques that rehabilitate and condition the soils as necessary to support vegetative growth.

2.2.10 Protect storm drain inlets.

a. Install inlet protection measures that remove sediment from discharges prior to entry into any storm drain inlet that carries stormwater from your site to a receiving water, provided you have authority to access the storm drain inlet.[31] Inlet protection measures are not required for storm drain inlets that are conveyed to a sediment basin, sediment trap, or similarly effective control; and

b. Clean, or remove and replace, the inlet protection measures as sediment accumulates, the filter becomes clogged, and/or performance is compromised. Where there is evidence of sediment accumulation adjacent to the inlet protection measure, remove the deposited sediment by the end of the same business day in which it is found or by the end of the following business day if removal by the same business day is not feasible.

2.2.11 Control stormwater discharges, including both peak flowrates and total stormwater volume, to minimize channel and streambank erosion and scour in the immediate vicinity of discharge points.[32]

2.2.12 If you install a sediment basin or similar impoundment:

a. Situate the basin or impoundment outside of any receiving water. and any natural buffers established under Part 2.2.1;

b. Design the basin or impoundment to avoid collecting water from wetlands;

c. Design the basin or impoundment to provide storage for either:

i. The calculated volume of runoff from a 2-year, 24-hour storm;[33] or

ii. 3,600 cubic feet per acre drained.

d. Utilize outlet structures that withdraw water from the surface of the sediment basin or similar impoundment, unless infeasible;[34]

e. Use erosion controls and velocity dissipation devices to prevent erosion at inlets and outlets; and

[31] Inlet protection measures can be removed in the event of flood conditions or to prevent erosion.

[32] Examples of stormwater controls that can be used to comply with this requirement include the use of erosion controls and/or velocity dissipation devices (e.g., check dams, sediment traps), within and along the length of a constructed site drainage feature and at the outfall to slow down stormwater.

[33] Operators may refer to https://www.epa.gov/npdes/construction-general-permit-resources-tools-and-templates for guidance on determining the volume of precipitation associated with their site's local 2-year, 24-hour storm event.

[34] The circumstances in which it is infeasible to design outlet structures in this manner are rare. Exceptions may include areas with extended cold weather, where using surface outlets may not be feasible during certain time periods (although they must be used during other periods). If you determine that it is infeasible to meet this requirement, you must provide documentation in your SWPPP to support your determination, including the specific conditions or time periods when this exception will apply.

f. Remove accumulated sediment to maintain at least one-half of the design capacity and conduct all other appropriate maintenance to ensure the basin or impoundment remains in effective operating condition.

2.2.13 If using treatment chemicals (e.g., *polymers, flocculants, coagulants*):

a. Use conventional erosion and sediment controls before and after the application of treatment chemicals. Chemicals may only be applied where treated stormwater is directed to a sediment control *(e.g., sediment basin, perimeter control)* before discharge.

b. Select appropriate treatment chemicals*.* Chemicals must be appropriately suited to the types of soils likely to be exposed during construction and present in the discharges being treated *(i.e., the expected turbidity, pH, and flow rate of stormwater flowing into the chemical treatment system or area)*.

c. Minimize discharge risk from stored chemicals. Store all treatment chemicals in leak-proof containers that are kept under storm-resistant cover and surrounded by secondary containment structures *(e.g., spill berms, dikes, spill containment pallets),* or provide equivalent measures designed and maintained to minimize the potential discharge of treatment chemicals in stormwater or by any other means *(e.g., storing chemicals in a covered area, having a spill kit available on site and ensuring personnel are available to respond expeditiously in the event of a leak or spill)*.

d. Comply with State/local requirements. Comply with applicable State and local requirements regarding the use of treatment chemicals.

e. Use chemicals in accordance with good engineering practices and specifications of the chemical provider/supplier. Use treatment chemicals and chemical treatment systems in accordance with good engineering practices, and with dosing specifications and sediment removal design specifications provided by the provider/supplier of the applicable chemicals, or document in your SWPPP specific departures from these specifications and how they reflect good engineering practice.

f. Ensure proper training. Ensure all persons who handle and use treatment chemicals at the construction site are provided with appropriate, product-specific training prior to beginning application of treatment chemicals. Among other things, the training must cover proper dosing requirements.

g. Perform additional measures specified by the EPA Regional Office for the authorized use of cationic chemicals. If you have been authorized to use cationic chemicals at your site pursuant to Part 1.1.9, you must perform all additional measures as conditioned by your authorization to ensure the use of such chemicals will not result in discharges that do not meet water quality standards.

2.2.14 Stabilize exposed portions of the site. Implement and maintain stabilization measures (*e.g., seeding protected by erosion controls until vegetation is established,*[35] *sodding, mulching, erosion control blankets, hydromulch, gravel*) that minimize erosion from any areas of exposed soil on the site in accordance with Part.

[35] If you will be evaluating the use of some type of erosion control netting to the site as part of your site stabilization, EPA encourages you to consider employing products that have been shown to minimize

a. Stabilization Deadlines:[36]

Table 2 Deadlines for Initiating and Completing Site Stabilization.

Total Amount of Land Disturbance Occurring At Any One Time[37]	**Deadline**
i. Five acres or less (≤5.0) **Note: this includes sites disturbing more than five acres (>5.0) total over the course of a project, but that limit disturbance at any one time (i.e., *phase the disturbance*) to five acres or less (≤5.0)**	• Initiate the installation of stabilization measures immediately[38] in any areas of exposed soil where construction activities have permanently ceased or will be temporarily inactive for 14 or more calendar days;[39] and • Complete the installation of stabilization measures as soon as practicable, but no later than 14 calendar days

impacts on wildlife. For instance, the U.S. Fish & Wildlife Service provides recommendations on the type of netting practices that are considered "wildlife friendly," including those that use natural fiber or 100 percent biodegradable materials and that use a loose weave with a non-welded, movable jointed netting, as well as those products that are not wildlife friendly including square plastic netting that are degradable (e.g., photodegradable, UV-degradable, oxo-degradable), netting made from polypropylene, nylon, polyethylene, or polyester. Other recommendations include removing the netting product when it is no longer needed. See https://www.fws.gov/midwest/eastlansing/library/pdf/WildlifeFriendlyErosionControlProducts_revised.pdf for further information. There also may be State, Tribal, or local requirements about using wildlife friendly erosion control products.

[36] EPA may determine, based on an inspection carried out under Part 4.8 and corrective actions required under Part 5.3, that the level of sediment discharge on the site makes it necessary to require a faster schedule for completing stabilization. For instance, if sediment discharges from an area of exposed soil that is required to be stabilized are compromising the performance of existing stormwater controls, EPA may require stabilization to correct this problem.

[37] Limiting disturbances to five (5) acres or less at any one time means that at no time during the project do the cumulative earth disturbances exceed five (5) acres. The following examples would qualify as limiting disturbances at any one time to five (5) acres or less:

1. The total area of disturbance for a project is five (5) acres or less.
2. The total area of disturbance for a project will exceed five (5) acres, but the operator ensures that no more than five (5) acres will be disturbed at any one time through implementation of stabilization measures. In this way, site stabilization can be used to "free up" land that can be disturbed without exceeding the five (5)-acre cap to qualify for the 14-day stabilization deadline. For instance, if an operator completes stabilization of two (2) acres of land on a five (5)-acre disturbance, then two (2) additional acres could be disturbed while still qualifying for the longer 14-day stabilization deadline.

[38] The following are examples of activities that would constitute the immediate initiation of stabilization:

1. Prepping the soil for vegetative or non-vegetative stabilization as long as seeding, planting, and/or installation of non-vegetative stabilization products takes place as soon as practicable, but no later than one (1) calendar day of completing soil preparation;
2. Applying mulch or other non-vegetative product to the exposed area;
3. Seeding or planting the exposed area;
4. Starting any of the activities in # 1 – 3 on a portion of the entire area that will be stabilized; and
5. Finalizing arrangements to have stabilization product fully installed in compliance with the deadlines for completing stabilization.

[39] The requirement to initiate stabilization immediately is triggered as soon as you know that construction work on a portion of the site is temporarily ceased and will not resume for 14 or more days, or as soon as you know that construction work is permanently ceased. In the context of this provision, "immediately" means as soon as practicable, but no later than the end of the next business day, following the day when the construction activities have temporarily or permanently ceased.

Total Amount of Land Disturbance Occurring At Any One Time[37]	Deadline
	after stabilization has been initiated.[40]
ii. More than five acres (>5.0)	• Initiate the installation of stabilization measures immediately[41] in any areas of exposed soil where construction activities have permanently ceased or will be temporarily inactive for 14 or more calendar days;[42] and • Complete the installation of stabilization measures as soon as practicable, but no later than seven (7) calendar days after stabilization has been initiated.[43]

b. Exceptions:

i. Arid, semi-arid, and drought-stricken areas (as defined in Appendix A)**.** If it is the seasonally dry period (as defined in Appendix A)[44] or a period in which drought is occurring, and vegetative stabilization measures are being used:

(a) Immediately initiate and, within 14 calendar days of temporary or permanent cessation of work in any portion of your site, complete the installation of temporary non-vegetative stabilization measures to the extent necessary to prevent erosion;

(b) As soon as practicable, given conditions or circumstances on the site, complete all activities necessary to seed or plant the area to be stabilized; and

(c) If construction is occurring during the seasonally dry period, indicate in your SWPPP the beginning and ending dates of the seasonally dry period and your site conditions. Also include the schedule you will follow for initiating and completing vegetative stabilization.

ii. Unforeseen circumstances. Operators that are affected by unforeseen circumstances[45] that delay the initiation and/or completion of vegetative stabilization:

[40] If vegetative stabilization measures are being implemented, stabilization is considered "installed" when all activities necessary to seed or plant the area are completed, including the application of any non-vegetative protective cover (e.g., mulch, erosion control blanket), if applicable. If non-vegetative stabilization measures are being implemented, stabilization is considered "installed" when all such measures are implemented or applied.

[41] See footnote 38.

[42] See footnote 39.

[43] See footnote 40.

[44] The term "seasonally dry period" as defined in Appendix A refers to a month in which the long-term average total precipitation is less than or equal to 0.5 inches. Refer to EPA's Seasonally Dry Period Locator Tool at https://www.epa.gov/npdes/construction-general-permit-resources-tools-and-templates and supporting maps for assistance in determining whether a site is operating during a seasonally dry period for the area.

[45] Examples include problems with the supply of seed stock or with the availability of specialized equipment and unsuitability of soil conditions due to excessive precipitation and/or flooding.

(a) Immediately initiate and, within 14 calendar days, complete the installation of temporary non-vegetative stabilization measures to prevent erosion;

(b) Complete all soil conditioning, seeding, watering or irrigation installation, mulching, and other required activities related to the planting and initial establishment of vegetation as soon as conditions or circumstances allow it on your site; and

(c) Document in the SWPPP the circumstances that prevent you from meeting the deadlines in Part 2.2.14a and the schedule you will follow for initiating and completing stabilization.

iii. Discharges to a sediment- or nutrient-impaired water or to a water that is identified by your State, Tribe, or EPA as Tier 2, Tier 2.5, or Tier 3 for antidegradation purposes. Complete stabilization as soon as practicable, but no later than seven (7) calendar days after stabilization has been initiated.

c. Final Stabilization Criteria (for any areas not covered by permanent structures)**:**

i. Establish uniform, perennial vegetation *(*i.e.*, evenly distributed, without large bare areas)* to provide 70 percent or more of the vegetative cover native to local undisturbed areas; and/or

ii. Implement permanent non-vegetative stabilization measures[46] to provide effective cover of any areas of exposed soil.

iii. Exceptions:

(a) **Arid, semi-arid, and drought-stricken areas** (as defined in Appendix A). Final stabilization is met if the area has been seeded or planted to establish vegetation that provides 70 percent or more of the vegetative cover native to local undisturbed areas within three (3) years and, to the extent necessary to prevent erosion on the seeded or planted area, non-vegetative erosion controls have been applied to provide cover for at least three years without active maintenance.

(b) **Disturbed areas on agricultural land that are restored to their preconstruction agricultural use.** The Part 2.2.14c final stabilization criteria do not apply.

(c) **Areas that need to remain disturbed.** In limited circumstances, stabilization may not be required if the intended function of a specific area of the site necessitates that it remain disturbed, and only the minimum area needed remains disturbed *(*e.g.*, dirt access roads, utility pole pads, areas being used for storage of vehicles, equipment, materials)*.

2.3 POLLUTION PREVENTION REQUIREMENTS[47]

You must implement pollution prevention controls in accordance with the following requirements to minimize the discharge of pollutants in stormwater and to prevent the discharge of pollutants from spilled or leaked materials from construction activities.

[46] Examples of permanent non-vegetative stabilization measures include riprap, gravel, gabions, and geotextiles.

[47] Under this permit, you are not required to minimize exposure for any products or materials where the exposure to precipitation and to stormwater will not result in a discharge of pollutants, or where exposure of a specific material or product poses little risk of stormwater contamination (such as final products and materials intended for outdoor use).

2.3.1 For equipment and vehicle fueling and maintenance:

a. Provide an effective means of eliminating the discharge of spilled or leaked chemicals, including fuels and oils, from these activities;[48]

b. If applicable, comply with the Spill Prevention Control and Countermeasures (SPCC) requirements in 40 CFR part 112 and Section 311 of the CWA;

c. Ensure adequate supplies are available at all times to handle spills, leaks, and disposal of used liquids;

d. Use drip pans and absorbents under or around leaky vehicles;

e. Dispose of or recycle oil and oily wastes in accordance with other Federal, State, Tribal, or local requirements; and

f. Clean up spills or contaminated surfaces immediately, using dry clean up measures (do not clean contaminated surfaces by hosing the area down), and eliminate the source of the spill to prevent a discharge or a continuation of an ongoing discharge.

2.3.2 For equipment and vehicle washing:

a. Provide an effective means of minimizing the discharge of pollutants from equipment and vehicle washing, wheel wash water, and other types of wash waters;[49]

b. Ensure there is no discharge of soaps, solvents, or detergents in equipment and vehicle wash water; and

c. For storage of soaps, detergents, or solvents, provide either (1) cover *(*e.g., *plastic sheeting, temporary roofs)* to minimize the exposure of these detergents to precipitation and to stormwater, or (2) a similarly effective means designed to minimize the discharge of pollutants from these areas.

2.3.3 For storage, handling, and disposal of building products, materials, and wastes:[50]

a. *For building materials and building products*,[51] provide either (1) cover (e.g., *plastic sheeting, temporary roofs*) to minimize the exposure of these products to

[48] Examples of effective means include:

- Locating activities away from receiving waters, storm drain inlets, and constructed or natural site drainage feature so that stormwater coming into contact with these activities cannot reach waters of the U.S.;
- Providing secondary containment (e.g., *spill berms, dikes, spill containment pallets*) and cover where appropriate; and
- Having a spill kit available on site and ensuring personnel are available to respond expeditiously in the event of a leak or spill.

[49] Examples of effective means include locating activities away from receiving waters and storm drain inlets or constructed or natural site drainage features and directing wash waters to a sediment basin or sediment trap, using filtration devices, such as filter bags or sand filters, or using other similarly effective controls.

[50] Compliance with the requirements of this permit does not relieve compliance requirements with respect to Federal, State, or local laws and regulations governing the storage, handling, and disposal of solid, hazardous, or toxic wastes and materials.

[51] Examples of building materials and building products typically present at construction sites include asphalt sealants, copper flashing, roofing materials, adhesives, concrete admixtures, and gravel and mulch stockpiles.

precipitation and to stormwater, or (2) a similarly effective means designed to minimize the discharge of pollutants from these areas.

Exception: Minimization of exposure is not required in cases where the exposure to precipitation and to stormwater will not result in a discharge of pollutants, or where exposure of a specific material or product poses little risk of stormwater contamination (such as final products and materials intended for outdoor use).

b. *For pesticides, herbicides, insecticides, fertilizers, and landscape materials:*

i. In storage areas, provide either (1) cover (e.g., *plastic sheeting, temporary roofs*) to minimize the exposure of these chemicals to precipitation and to stormwater, or (2) a similarly effective means designed to minimize the discharge of pollutants from these areas; and

ii. Comply with all application and disposal requirements included on the registered pesticide, herbicide, insecticide, and fertilizer label (see also Part 2.3.5).

c. *For diesel fuel, oil, hydraulic fluids, other petroleum products, and other chemicals:* The following requirements apply to the storage and handling of chemicals on your site. If you are already implementing controls as part of an SPCC or other spill prevention plan that meet or exceed the requirements of this Part, you may continue to do so and be considered in compliance with these provisions provided you reference the applicable parts of the SPCC or other plans in your SWPPP as required in Part 7.2.6b.viii.

i. If any chemical container has a storage capacity of less than 55 gallons:

(a) The containers must be water-tight, and must be kept closed, sealed, and secured when not being actively used;

(b) If stored outside, use a spill containment pallet or similar device to capture small leaks or spills; and

(c) Have a spill kit available on site that is in good working condition (i.e., not damaged, expired, or used up) and ensure personnel are available to respond immediately in the event of a leak or spill.

ii. If any chemical container has a storage capacity of 55 gallons or more:

(a) The containers must be water-tight, and must be kept closed, sealed, and secured when not being actively used;

(b) Store containers a minimum of 50 feet from receiving waters, constructed or natural site drainage features, and storm drain inlets. If infeasible due to site constraints, store containers as far away from these features as the site permits. If site constraints prevent you from storing containers 50 feet away from receiving waters or the other features identified, you must document in your SWPPP the specific reasons why the 50-foot setback is infeasible, and how you will store containers as far away as the site permits;

(c) Provide either (1) cover (e.g., temporary roofs) to minimize the exposure of these containers to precipitation and to stormwater, or (2) secondary containment (e.g., curbing, spill berms, dikes, spill containment pallets, double-wall, above-ground storage tank); and

(d) Have a spill kit available on site that is in good working condition (i.e., not

damaged, expired, or used up) and ensure personnel are available to respond immediately in the event of a leak or spill. Additional secondary containment measures are listed at 40 CFR § 112.7(c)(1).

iii. Clean up spills immediately, using dry clean-up methods where possible, and dispose of used materials properly. You are prohibited from hosing the area down to clean surfaces or spills. Eliminate the source of the spill to prevent a discharge or a furtherance of an ongoing discharge.

d. *For hazardous or toxic wastes:*[52]

i. Separate hazardous or toxic waste from construction and domestic waste;

ii. Store waste in sealed containers, constructed of suitable materials to prevent leakage and corrosion, and labeled in accordance with applicable Resource Conservation and Recovery Act (RCRA) requirements and all other applicable Federal, State, Tribal, or local requirements;

iii. Store all outside containers within appropriately-sized secondary containment (e.g., *spill berms, dikes, spill containment pallets*) to prevent spills from being discharged, or provide a similarly effective means designed to prevent the discharge of pollutants from these areas *(*e.g., *storing chemicals in a covered area, having a spill kit available on site);*

iv. Dispose of hazardous or toxic waste in accordance with the manufacturer's recommended method of disposal and in compliance with Federal, State, Tribal, and local requirements;

v. Clean up spills immediately, using dry clean-up methods, and dispose of used materials properly. You are prohibited from hosing the area down to clean surfaces or spills. Eliminate the source of the spill to prevent a discharge or a furtherance of an ongoing discharge; and

vi. Follow all other Federal, State, Tribal, and local requirements regarding hazardous or toxic waste.

e. *For construction and domestic wastes:*[53]

i. Provide waste containers *(*e.g., *dumpster, trash receptacle)* of sufficient size and number to contain construction and domestic wastes;

(a) For waste containers with lids, keep waste container lids closed when not in use, and close lids at the end of the business day and during storm events. For waste containers without lids, provide either (1) cover *(*e.g., *a tarp, plastic sheeting, temporary roof)* to minimize exposure of wastes to precipitation, or (2) a similarly effective means designed to minimize the discharge of pollutants *(*e.g., *secondary containment)*;

(b) On business days, clean up and dispose of waste in designated waste

[52] Examples of hazardous or toxic waste that may be present at construction sites include paints, caulks, sealants, fluorescent light ballasts, solvents, petroleum-based products, wood preservatives, additives, curing compounds, and acids.

[53] Examples of construction and domestic wastes include packaging materials, scrap construction materials, masonry products, timber, pipe and electrical cuttings, plastics, styrofoam, concrete, demolition debris; and other trash or discarded materials.

containers; and

(c) Clean up immediately if containers overflow, and if there is litter elsewhere on the site from escaped trash.

ii. Waste containers are not required for the waste remnant or unused portions of construction materials or final products that are covered by the exception in Part 2.2.3a provided that:

(a) These wastes are stored separately from other construction or domestic wastes addressed by Part 2.3.3e.i (i.e., wastes not covered by the exception in Part 2.3.3a). If the wastes are mixed, they must be stored in waste containers as required in Part 2.3.3e.i; and

(b) These wastes are stored in designated areas of the site, the wastes are described in the SWPPP (see Part 7.2.6b.ix), and identified in the site plan (see Part 7.2.4i).

f. *For sanitary waste*, position portable toilets so they are secure and will not be tipped or knocked over, and are located away from receiving waters, storm drain inlets, and constructed or natural site drainage features.

2.3.4 For washing applicators and containers used for stucco, paint, concrete, form release oils, curing compounds, or other materials:

a. Direct wash water into a leak-proof container or leak-proof and lined pit designed so no overflows can occur due to inadequate sizing or precipitation;

b. Handle washout or cleanout wastes as follows:

i. For liquid wastes:

(a) Do not dump liquid wastes or allow them to enter into constructed or natural site drainage features, storm inlets, or receiving waters;

(b) Do not allow liquid wastes to be disposed of through infiltration or to otherwise be disposed of on the ground;

(c) Comply with applicable State, Tribal, or local requirements for disposal

ii. Remove and dispose of hardened concrete waste consistent with your handling of other construction wastes in Part 2.3.3e; and

c. Locate any washout or cleanout activities as far away as possible from receiving waters, constructed or natural site drainage features, and storm drain inlets, and, to the extent feasible, designate areas to be used for these activities and conduct such activities only in these areas.

2.3.5 For the application of fertilizers:

a. Apply at a rate and in amounts consistent with manufacturer's specifications, or document in the SWPPP departures from the manufacturer specifications where appropriate in accordance with Part 7.2.6b.x;

b. Apply at the appropriate time of year for your location, and preferably timed to coincide as closely as possible to the period of maximum vegetation uptake and growth;

c. Avoid applying before heavy rains that could cause excess nutrients to be discharged;

d. Never apply to frozen ground;

e. Never apply to constructed or natural site drainage features; and

f. Follow all other Federal, State, Tribal, and local requirements regarding fertilizer application.

2.3.6 Emergency Spill Notification Requirements

Discharges of toxic or hazardous substances from a spill or other release are prohibited, consistent with Part 1.3.5. Where a leak, spill, or other release containing a hazardous substance or oil in an amount equal to or in excess of a reportable quantity established under either 40 CFR part 110, 40 CFR part 117, or 40 CFR part 302 occurs during a 24-hour period, you must notify the National Response Center (NRC) at (800) 424-8802 or, in the Washington, DC metropolitan area, call (202) 267-2675 in accordance with the requirements of 40 CFR part 110, 40 CFR part 117, and 40 CFR part 302 as soon as you have knowledge of the release. You must also, within seven (7) calendar days of knowledge of the release, provide a description of the release, the circumstances leading to the release, and the date of the release. State, Tribal, or local requirements may necessitate additional reporting of spills or discharges to local emergency response, public health, or drinking water supply agencies.

2.4 CONSTRUCTION DEWATERING REQUIREMENTS

Comply with the following requirements to minimize the discharge of pollutants from dewatering[54] operations.

2.4.1 Route dewatering water through a sediment control (e.g., sediment trap or basin, pumped water filter bag) designed to prevent discharges with visual turbidity; [55]

2.4.2 Do not discharge visible floating solids or foam;

2.4.3 The discharge must not cause the formation of a visible sheen on the water surface, or visible oily deposits on the bottom or shoreline of the receiving water. Use an oil-water separator or suitable filtration device (such as a cartridge filter) designed to remove oil, grease, or other products if dewatering water is found to or expected to contain these materials;

2.4.4 To the extent feasible, use well-vegetated (e.g., grassy or wooded), upland areas of the site to infiltrate dewatering water before discharge.[56] You are prohibited from using receiving waters as part of the treatment area;

2.4.5 To prevent dewatering-related erosion and related sediment discharges:

a. Use stable, erosion-resistant surfaces (e.g., well-vegetated grassy areas, clean filter stone, geotextile underlayment) to discharge from dewatering controls;

---

[54] "Dewatering" is defined in Appendix A as "the act of draining accumulated stormwater and/or ground water from building foundations, vaults, and trenches, or other similar points of accumulation."

[55] For the purposes of this permit, visual turbidity is present where there is a sediment plume in the discharge or the discharge appears cloudy, or opaque, or has a visible contrast that can be identified by an observer.

[56] See footnote 19.

b. Do not place dewatering controls, such as pumped water filter bags, on steep slopes (as defined in Appendix A); and

c. At all points where dewatering water is discharged, comply with the velocity dissipation requirements of Part 2.2.11.

2.4.6 For backwash water, either haul it away for disposal or return it to the beginning of the treatment process;

2.4.7 Replace and clean the filter media used in dewatering devices when the pressure differential equals or exceeds the manufacturer's specifications; and

2.4.8 Comply with dewatering-specific inspection requirements in Part 4.

3 WATER QUALITY-BASED EFFLUENT LIMITATIONS

3.1 GENERAL EFFLUENT LIMITATION TO MEET APPLICABLE WATER QUALITY STANDARDS

Discharges must be controlled as necessary to meet applicable water quality standards. Discharges must also comply with any additional State or Tribal requirements that are in Part 9.

In the absence of information demonstrating otherwise, EPA expects that compliance with the conditions in this permit will result in stormwater discharges being controlled as necessary to meet applicable water quality standards. If at any time you become aware, or EPA determines, that discharges are not being controlled as necessary to meet applicable water quality standards, you must take corrective action as required in Parts 5.1 and 5.2, and document the corrective actions as required in Part 5.4.

EPA may insist that you install additional controls (to meet the narrative water quality-based effluent limit above) on a site-specific basis, or require you to obtain coverage under an individual permit, if information in your NOI or from other sources indicates that your discharges are not controlled as necessary to meet applicable water quality standards. This includes situations where additional controls are necessary to comply with a wasteload allocation in an EPA-established or approved TMDL.

If during your coverage under a previous permit, you were required to install and maintain stormwater controls specifically to meet the assumptions and requirements of an EPA-approved or established TMDL (for any parameter) or to otherwise control your discharge to meet water quality standards, you must continue to implement such controls as part of your coverage under this permit.

3.2 WATER QUALITY-BASED CONDITIONS FOR SITES DISCHARGING TO CERTAIN IMPAIRED AND HIGH QUALITY RECEIVING WATERS

For any portion of the site that discharges to a sediment or nutrient-impaired water or to a water that is identified by your State, Tribe, or EPA as Tier 2, Tier 2.5, or Tier 3 for antidegradation purposes,[57] you must comply with the inspection frequency specified in Part 4.3 and you must comply with the stabilization deadline specified in Part 2.2.14b.iii.[58]

[57] Refer to Appendix A for definitions of "impaired water" and "Tier 2," "Tier 2.5," and "Tier 3" waters. For assistance in determining whether your site discharges to impaired waters, EPA has developed a tool that is available at https://www.epa.gov/npdes/epas-stormwater-discharge-mapping-tools. For assistance in determining whether your site discharges to a Tier 2, 2.5, or 3 water, refer to the list of such waters at https://www.epa.gov/npdes/construction-general-permit-resources-tools-and-templates.

[58] If you qualify for any of the reduced inspection frequencies in Part 4.4, you may conduct inspections in

If you discharge to a water that is impaired for a parameter other than a sediment-related parameter or nutrients, EPA will inform you if any additional controls are necessary for your discharge to be controlled as necessary to meet water quality standards. These controls might include those necessary for your discharge to be consistent with the assumptions of any available wasteload allocation in any applicable TMDL. In addition, EPA may require you to apply for and obtain coverage under an individual NPDES permit.

In addition, on a case-by-case basis, EPA may notify operators of new sites or operators of existing sites with increased discharges that additional analyses, stormwater controls, and/or other measures are necessary to comply with the applicable antidegradation requirements, or notify you that an individual permit application is necessary.

If you discharge to a water that is impaired for polychlorinated biphenyls (PCBs) and are engaging in demolition of any structure with at least 10,000 square feet of floor space built or renovated before January 1, 1980, you must:

a. Implement controls[59] to minimize the exposure of PCB-containing building materials, including paint, caulk, and pre-1980 fluorescent lighting fixtures, to precipitation and to stormwater; and

b. Ensure that disposal of such materials is performed in compliance with applicable State, Federal, and local laws.

3.3 TURBIDITY BENCHMARK MONITORING FOR SITES DISCHARGING DEWATERING WATER TO PROTECT THE WATER QUALITY OF SENSITIVE WATERS

For sites discharging dewatering water to "sensitive waters" (i.e., receiving waters listed as impaired for sediment or a sediment-related parameter (as defined in Appendix A), or receiving waters designated as a Tier 2, Tier 2.5, or Tier 3 for antidegradation purposes) you are required to comply with the benchmark monitoring requirements in this Part and document the procedures you will use at your site in your SWPPP pursuant to Part 7.2.8. A summary of these requirements is included in Table 1.

EPA notes that the benchmark threshold is not an effluent limitation, rather it is an indicator that the dewatering controls may not be working to protect water quality, which the operator must investigate and correct as appropriate. A benchmark exceedance is not a permit violation. However, if a benchmark exceedance triggers corrective action in Part 5.1.5a, failure to conduct any required action is a permit violation.

Where there are multiple operators associated with the same site, the operators may coordinate with one another to carry out the monitoring requirements of this Part in order to avoid duplicating efforts. Such coordinating arrangements must be described in the SWPPP consistent with Part 7.2.8. Regardless of how the operators divide the

accordance with Part 4.4 for any portion of your site that discharges to a sensitive water.

[59] Examples of controls to minimize exposure of PCBs to precipitation and stormwater include separating work areas from non-work areas and selecting appropriate personal protective equipment and tools, constructing a containment area so that all dust or debris generated by the work remains within the protected area, and using tools that minimize dust and heat (<212°F). For additional information, refer to Part 2.3.3 of the CGP Fact Sheet.

responsibilities for monitoring and reporting, each operator remains responsible for compliance with these requirements.[60]

3.3.1 Turbidity monitoring requirements[61]

a. **Sampling frequency.** You must collect at least one turbidity sample from your dewatering discharge each day a discharge occurs.

b. **Sampling location.** Samples must be taken at all points where dewatering water is discharged. Samples must be taken after the dewatering water has been treated by installed treatment devices pursuant to Parts 2.4.1 and 2.4.3 and prior to its discharge off site into a receiving water, constructed or natural site drainage feature, or storm drain inlet.

c. **Representative samples.** Samples taken must be representative of the dewatering discharge for any given day as required in Appendix G (standard permit conditions), Part G.10.2.

d. **Test methods.** Samples must be measured using a turbidity meter that reports results in nephelometric turbidity units (NTUs) and conforms with a Part 136-approved method (e.g., methods 180.1 and 2130). You are required to use the meter, and conduct a calibration verification prior to each day's use, consistent with the manufacturer's instructions.

3.3.2 Turbidity benchmark

a. The benchmark threshold for turbidity for this permit is 50 NTUs (referred to elsewhere in this permit as the "standard 50 NTU benchmark") unless EPA has authorized the use of an alternate benchmark in accordance with Part 3.3.2b.

b. **Request for alternate benchmark threshold.**

i. At any time prior to or during your coverage under this permit, you may request that EPA approve a benchmark for your site that is higher than 50 NTUs if you have information demonstrating the higher number is the same as your receiving water's water quality standard for turbidity. Unless EPA approves an alternate benchmark, you will be required to use the standard 50 NTU benchmark. To request approval of an alternate benchmark, you must submit the following information to your applicable EPA Regional Office (see Appendix K):
(a) The current turbidity water quality standard that applies to your receiving

[60] For instance, if Operator A relies on Operator B to meet the Part 3.3.1 turbidity monitoring requirements, the Part 3.3.4 reporting and recordkeeping requirements, and the Part 5.2.2 corrective action provisions when applicable, Operator A does not have to duplicate these same functions if Operator B is implementing them for both operators to be in compliance with the permit. However, Operator A remains responsible for complying with these permit requirements if Operator B fails to take actions that were necessary for Operator A to comply with the permit. See also footnote 83. EPA notes that both Operator A and B are required to submit turbidity monitoring reports as required under Part 3.3.4, however, Operator A's report does not need to include the data collected by Operator B as long as Operator B submits the required data and Operator A's report indicates that it is relying on Operator B to report the data. See Part 3.3.4a.

[61] Operators may find it useful to consult EPA's *Monitoring and Inspection Guide for Construction Dewatering*, available at https://www.epa.gov/npdes/construction-general-permit-resources-tools-and-templates, which provides guidelines on how to correctly monitor for turbidity, determine if the weekly average exceeds the benchmark, and, if so, how to proceed with corrective action.

water and the source/citation.[62]

(b) If the applicable turbidity water quality standard requires information on natural or background turbidity levels (e.g., "no more than 10 NTU above natural turbidity levels") to determine the specific standard for the receiving water, include available data that can be used to establish the natural turbidity levels of your receiving water (including literature studies or Federal, State, Tribal, or local government data). Data must be representative of the natural turbidity levels of your specific receiving water. Identify the source(s) of all data provided, including if the data are from samples you collected of the receiving water.

ii. EPA will inform you of its decision on whether to approve the requested alternate benchmark within 30 days. EPA may approve your request, request additional time (e.g., if additional information is needed to substantiate the data you provided), or deny your request. Unless and until EPA approves your request to use an alternate benchmark, you are required to use the standard benchmark of 50 NTUs and take any required corrective actions if an exceedance occurs.

3.3.3 Comparison of turbidity samples to benchmark. Compare the weekly average[63] of your turbidity monitoring results to the standard 50 NTU benchmark, or alternate benchmark if approved by EPA.

a. If the weekly average of your turbidity monitoring results exceeds the standard benchmark (or your approved alternate benchmark), you are required to conduct follow-up corrective action in accordance with Part 5.2.2 and document any corrective action taken in your corrective action log in accordance with Part 5.4.

b. For averaging purposes, a "monitoring week" starts with a Monday and ends on Sunday. Once a new monitoring week starts, you will need to calculate a new average for that week of turbidity monitoring results.[64] A weekly average may consist of one or more turbidity monitoring results.

c. Although you are not required to collect and analyze more than one turbidity sample per day from your dewatering discharge, if you do collect and analyze more than one sample on any given day, you must include any additional results in the

[62] For instance, if your site is located in Washington, DC, and you are discharging to a Class B water, for which the water quality standard is that turbidity may not increase above ambient levels by more than 20 percent, you would reference "Water Quality Standards for the District of Columbia, Chapter 11, Section 1104.8."

[63] A "weekly average" is defined as the sum of all of the turbidity samples taken during a "monitoring week" divided by the number of samples measured during that week. Average values should be calculated to the nearest whole number.

[64] For example, if turbidity samples from your dewatering discharge in week 1 result in values of 30 NTU on Tuesday, 40 NTU on Wednesday, and 45 NTU on Thursday, your weekly average turbidity value would be 38.33 NTU ((30+40+45) ÷ 3 = 38 NTU). If in week 2, your turbidity samples resulted in values of 45 NTU on Monday, 30 NTU on Tuesday, 25 NTU on Wednesday, and 15 NTU on Thursday, you would calculate a new average for that week, which would yield an average turbidity value of 28.75 NTU ((45+30+25+15) ÷ 4 = 29 NTU). By comparison, if your samples on consecutive days from Friday to Monday were 60 NTU, 45 NTU, 40 NTU, and 43 NTU, respectively, and there are no other dewatering discharges for the remainder of the week, you would calculate one weekly average for the Friday to Sunday to be 48 NTU ((60+45+40) ÷ 3 = 48 NTU), and a separate weekly average for the one Monday to be 43 NTU (43 ÷ 1 = 43 NTU).

calculation of your weekly average (i.e., add all individual results for that monitoring week and divide by the total number of samples).[65]

d. If you are conducting turbidity monitoring for more than one dewatering discharge point, you must calculate a weekly average turbidity value for each discharge point and compare each to the turbidity benchmark.

3.3.4 Reporting and recordkeeping.

a. You must submit reports of your weekly average turbidity data to EPA no later than 30 days following the end of each monitoring quarter. If there are monitoring weeks in which there was no dewatering discharge, or if there is a monitoring quarter with no dewatering discharge, indicate this in your turbidity monitoring report. If another operator associated with your same site is conducting turbidity monitoring on your behalf pursuant to Part 3.3, indicate this in your turbidity monitoring report.

b. For the purposes of this permit, the following monitoring quarters and reporting deadlines apply:

Table 3. Monitoring Quarters and Deadlines for Reporting Turbidity Benchmark Monitoring Data.

Monitoring Quarter #	**Months**	**Reporting Deadline** (no later than 30 days after end of the monitoring quarter)
1	January 1 – March 31	April 30
2	April 1 – June 30	July 30
3	July 1 – September 30	October 30
4	October 1 – December 31	January 30

c. You must use EPA's NPDES eReporting Tool (NeT) to electronically submit your quarterly turbidity data, unless, consistent with Part 1.4.2, you received a waiver from your applicable EPA Regional Office. If the EPA Regional Office grants you approval to use a paper turbidity monitoring report form, and you elect to use it, you must complete the form in Appendix K. If EPA approves of your request to use an alternate turbidity benchmark pursuant to Part 3.3.2b, EPA will substitute the alternate benchmark in your NeT account.

d. For each day in which you are required to monitor, you must record the monitoring information required by Appendix G, Parts G.10.2 and G.10.3 and retain all such information for a period of at least three years from the date this permit expires or from the date your authorization is terminated.

[65] For example, if during a monitoring week you take two turbidity samples on Tuesday with a value of 30 NTU and 35 NTU, three samples on Wednesday with a value of 40 NTU, 45 NTU, and 48 NTU, and one sample on Thursday with a value of 45 NTU, your weekly average turbidity value for this week would be 41 NTU ((30+35+40+45+48+45) ÷ 6 = 41 NTU).

Table 4. Summary of Turbidity Benchmark Monitoring Requirements.

Applicability	Sampling Requirement	Turbidity Benchmark	Corrective Action	Reporting
Sites discharging dewatering water to a sediment-impaired water or to a water designated as a Tier 2, Tier 2.5, or Tier 3 for antidegradation purposes.	Collect at least one turbidity sample per day, from each discharge point, on any day there is a dewatering discharge. Use turbidity sampling procedures specified in Part 3.3.1.	Compare the weekly average of your turbidity monitoring results to the 50 NTU benchmark (or alternate benchmark if approved by EPA).	If the weekly average of turbidity monitoring results exceeds the 50 NTU turbidity benchmark (or alternate benchmark if approved by EPA), you are required to take follow-up corrective action in accordance with Part 5.2.2.	Report all weekly average turbidity monitoring results on a quarterly basis via NeT-CGP (unless use of the paper monitoring form in Appendix K is approved by EPA) no later than 30 days following the end of each monitoring quarter.

4 INSPECTION REQUIREMENTS

4.1 PERSON(S) RESPONSIBLE FOR CONDUCTING SITE AND DEWATERING INSPECTIONS

The person(s) inspecting your site may be a person on your staff or a third party you hire to conduct such inspections. You are responsible for ensuring that any person conducting inspections pursuant to this Part is a "qualified person." A qualified person is someone who has completed the training required by Part 6.3.

4.2 FREQUENCY OF INSPECTIONS.[66]

At a minimum, you must conduct a site inspection in accordance with one of the two schedules listed below, unless you are subject to the Part 4.3 site inspection frequency for discharges to sediment or nutrient-impaired or high quality waters, or qualify for a Part 4.4 reduction in the inspection frequency:

4.2.1 At least once every seven (7) calendar days; *or*

4.2.2 Once every 14 calendar days *and* within 24 hours[67] of the occurrence of:

- **a.** A storm event that produces 0.25 inches or more of rain within a 24-hour period.
  - **i.** If a storm event produces 0.25 inches or more of rain within a 24-hour period (including when there are multiple, smaller storms that alone produce less than 0.25 inches but together produce 0.25 inches or more in 24 hours), you are required to conduct one inspection within 24 hours of when 0.25 inches of rain or more has fallen.

[66] Inspections are only required during the site's normal working hours.

[67] For the purposes of the inspection requirements in this Part, conducting an inspection "within 24 hours" means that once either of the two conditions in Parts 4.2.2a or 4.2.2b are met you have 24 hours from that time to conduct an inspection. For clarification, the 24 hours is counted as a continuous passage of time, and not counted by business hours (e.g., 3 business days of 8 hours each). When the 24-hour inspection time frame occurs entirely outside of normal working hours, you must conduct an inspection by no later than the end of the next business day.

ii. If a storm event produces 0.25 inches or more of rain within a 24-hour period on the first day of a storm and continues to produce 0.25 inches or more of rain on subsequent days, you must conduct an inspection within 24 hours of the first day of the storm and within 24 hours after the last day of the storm that produces 0.25 inches or more of rain (i.e., only two inspections would be required for such a storm event).[68]

b. A discharge caused by snowmelt from a storm event that produces 3.25 inches[69] or more of snow within a 24-hour period. You are required to conduct one inspection once the discharge of snowmelt from a 3.25-inch or more snow accumulation occurs. Additional snowmelt inspections are only required if following the discharge from the first snowmelt, there is a discharge from a separate storm event that produces 3.25 inches or more of snow.

4.2.3 To determine whether a storm event meets either of the thresholds in Parts 4.2.2a or 4.2.2b:

a. For rain, you must either keep a properly maintained rain gauge on your site, or obtain the storm event information from a weather station that is representative of your location. For any 24-hour period during which there is 0.25 inches or more of rainfall, you must record the total rainfall measured for that day in accordance with Part 4.7.1d.

b. For snow, you must either take measurements of snowfall at your site,[70] or rely on similar information from a local weather forecasting provider that is representative of your location.

4.3 INCREASE IN INSPECTION FREQUENCY FOR CERTAIN SITES.

The increased inspection frequencies established in this Part take the place of the Part 4.2 inspection frequencies for the portion of the site affected.

4.3.1 For any portion of the site that discharges to a sediment or nutrient-impaired water or to a water that is identified by your State, Tribe, or EPA as Tier 2, Tier 2.5, or Tier 3 for antidegradation purposes (see Part 3.2), you must conduct an once every seven (7) calendar days *and* within 24 hours of the occurrence of a storm event that produces 0.25 inches or more of rain within a 24-hour period, or within 24 hours of a snowmelt discharge from a storm event that produces 3.25 inches or more of snow within a 24-hour period.

[68] For example, if 0.30 inches of rain falls on Day 1, 0.25 inches of rain falls on Day 2, and 0.10 inches of rain fall on Day 3, you would be required to conduct a first inspection within 24 hours of the Day 1 rainfall and a second inspection within 24 hours of the Day 2 rainfall, but a third inspection would not be required within 24 hours of the Day 3 rainfall.

[69] This is the amount of snow that is equivalent to 0.25 inches of rain, based on information from the National Oceanic and Atmospheric Administration (NOAA) indicating that 13 inches of snow is, on average, equivalent to 1 inch of rain. See https://www.nssl.noaa.gov/education/svrwx101/winter/faq/.

[70] For snowfall measurements, EPA suggests use of NOAA's National Weather Service guidelines at https://www.weather.gov/jkl/snow_measurement. These guidelines recommend use of a "snowboard" (a piece of wood about 16 inches by 16 inches) that is placed in an unobstructed part of the site on a hard surface.

Refer to Parts 4.2.3a and 4.2.3b for the requirements to determine if a storm event produces enough rain or snow to trigger the inspection requirement.

4.3.2 For sites discharging dewatering water, you must conduct an inspection in accordance with Part 4.6.3 during the discharge once per day on which the discharge occurs. The Part 4.2 inspection frequency still applies to all other portions of the site, unless the site is affected by either the increased frequency in Part 4.3.1 or the reduced frequency in Part 4.4.

4.4 REDUCTIONS IN INSPECTION FREQUENCY

4.4.1 Stabilized areas.

a. You may reduce the frequency of inspections to twice per month for the first month, no more than 14 calendar days apart, then once per month until permit coverage is terminated consistent with Part 8 in any area of your site where the stabilization steps in Part 2.2.14a have been completed. If construction activity resumes in this portion of the site at a later date, the inspection frequency immediately increases to that required in Parts 4.2 and 4.3, as applicable. You must document the beginning and ending dates of this period in your SWPPP.

b. Exception. For "linear construction sites" (as defined in Appendix A) where disturbed portions have undergone final stabilization at the same time active construction continues on others, you may reduce the frequency of inspections to twice per month for the first month, no more than 14 calendar days apart, in any area of your site where the stabilization steps in Part 2.2.14a have been completed. After the first month, inspect once more within 24 hours of the occurrence of a storm event that produces 0.25 inches of rain or more within a 24-hour period, or within 24 hours of a snowmelt discharge from a storm event that produces 3.25 inches or more of snow within a 24-hour period. If there are no issues or evidence of stabilization problems, you may suspend further inspections. If "wash-out" of stabilization materials and/or sediment is observed, following re-stabilization, inspections must resume at the inspection frequency required in Part 4.4.1a. Inspections must continue until final stabilization is visually confirmed following a storm event that produces 0.25 inches of rain or more within a 24-hour period.

4.4.2 Arid, semi-arid, or drought-stricken areas (as defined in Appendix A). If it is the seasonally dry period[71] or a period in which drought is occurring, you may reduce the frequency of inspections to once per month and within 24 hours of the occurrence of a storm event that produces 0.25 inches of rain or more within a 24-hour period, or within 24 hours of a snowmelt discharge from a storm event that produces 3.25 inches or more of snow within a 24-hour period. You must document that you are using this reduced schedule and the beginning and ending dates of the seasonally dry period in your SWPPP. Follow the procedures in Part 4.2.3a and 4.2.3b, accordingly, to determine if a storm event occurs that produces 0.25 inches or more of rain or 3.25 inches or more of snow within a 24-hour period. For any 24-hour period during which there is 0.25 inches or more of rainfall, or 3.25 inches or more of snow, you must record the total rainfall or snow measured for that day in accordance with Part 4.7.1d.

[71] See footnote 44.

4.4.3 Frozen conditions:

a. If you are suspending construction activities due to frozen conditions, you may temporarily suspend inspections on your site until thawing conditions (as defined in Appendix A) begin to occur if:

i. Discharges are unlikely due to continuous frozen conditions that are likely to continue at your site for at least three (3) months based on historic seasonal averages.[72] If unexpected weather conditions (such as above freezing temperatures or rain events) make discharges likely, you must immediately resume your regular inspection frequency as described in Parts 4.2 and 4.3, as applicable;

ii. Land disturbances have been suspended; and

iii. All disturbed areas of the site have been stabilized in accordance with Part 2.2.14a.

b. If you are still conducting construction activities during frozen conditions, you may reduce your inspection frequency to once per month if:

i. Discharges are unlikely due to continuous frozen conditions that are likely to continue at your site for at least three (3) months based on historic seasonal averages. If unexpected weather conditions (such as above freezing temperatures or rain events) make discharges likely, you must immediately resume your regular inspection frequency as described in Parts 4.2 and 4.3, as applicable; and

ii. Except for areas in which you are actively conducting construction activities, disturbed areas of the site have been stabilized in accordance with Part 2.2.14a.

You must document the beginning and ending dates of this period in your SWPPP.

4.5 AREAS THAT MUST BE INSPECTED

During your site inspection, you must at a minimum inspect the following areas of your site:

4.5.1 All areas that have been cleared, graded, or excavated and that have not yet completed stabilization consistent with Part 2.2.14a;

4.5.2 All stormwater controls, including pollution prevention controls, installed at the site to comply with this permit;[73]

4.5.3 Material, waste, borrow, and equipment storage and maintenance areas that are covered by this permit;

4.5.4 All areas where stormwater typically flows within the site, including constructed or natural site drainage features designed to divert, convey, and/or treat stormwater;

4.5.5 All areas where construction dewatering is taking place, including controls to treat the dewatering discharge and any channelized flow of water to and from those controls;

[72] Use data sets that include the most recent data available to account for recent precipitation patterns and trends.

[73] This includes the requirement to inspect for sediment that has been tracked out from the site onto paved roads, sidewalks, or other paved areas consistent with Part 2.2.4.

4.5.6 All points of discharge from the site; and

4.5.7 All locations where stabilization measures have been implemented.

You are not required to inspect areas that, at the time of the inspection, are considered unsafe to your inspection personnel.

4.6 REQUIREMENTS FOR INSPECTIONS

4.6.1 During each site inspection, you must at a minimum:

- **a.** Check whether all stormwater controls *(*i.e.*, erosion and sediment controls and pollution prevention controls)* are properly installed, appear to be operational, and are working as intended to minimize pollutant discharges.
- **b.** Check for the presence of conditions that could lead to spills, leaks, or other accumulations of pollutants on the site.
- **c.** Identify any locations where new or modified stormwater controls are necessary to meet the requirements of Parts 2 and/or 3.
- **d.** Check for signs of visible erosion and sedimentation *(*i.e.*, sediment deposits)* that have occurred and are attributable to your discharge at points of discharge and, if applicable, on the banks of any receiving waters flowing within or immediately adjacent to the site;
- **e.** Check for signs of sediment deposition that are visible from your site and attributable to your discharge (e.g., sand bars with no vegetation growing on top in receiving waters or in other constructed or natural site drainage features, or the buildup of sediment deposits on nearby streets, curbs, or open conveyance channels).
- **f.** Identify any incidents of noncompliance observed.

4.6.2 If a discharge is occurring during your inspection:

- **a.** Identify all discharge points at the site; and
- **b.** Observe and document the visual quality of the discharge, and take note of the characteristics of the stormwater discharge, including color; odor; floating, settled, or suspended solids; foam; oil sheen; and other indicators of stormwater pollutants. Check also for signs of these same pollutant characteristics that are visible from your site and attributable to your discharge in receiving waters or in other constructed or natural site drainage features.

4.6.3 For dewatering inspections conducted pursuant to Parts 4.3.2, record the following in a report within 24 hours of completing the inspection:

- **a.** The inspection date;
- **b.** Names and titles of personnel making the inspection;
- **c.** Approximate times that the dewatering discharge began and ended on the day of inspection;[74]
- **d.** Estimates of the rate (in gallons per day) of discharge on the day of inspection;

[74] If the dewatering discharge is a continuous discharge that continues after normal business hours, indicate that the discharge is continuous.

e. Whether or not any of the following indications of pollutant discharge were observed at the point of discharge to any receiving waters flowing through or immediately adjacent to the site and/or to constructed or natural site drainage features or storm drain inlets:[75]

i. a sediment plume, suspended solids, unusual color, presence of odor, decreased clarity, or presence of foam; and/or

ii. a visible sheen on the water surface or visible oily deposits on the bottom or shoreline of the receiving water; and

f. Photographs of (1) the dewatering water prior to treatment by a dewatering control(s) and the final discharge after treatment; (2) the dewatering control(s); and (3) the point of discharge to any receiving waters flowing through or immediately adjacent to the site and/or to constructed or natural site drainage features, storm drain inlets, and other conveyances to receiving waters.

You must also comply with the Part 4.7.2, 4.7.3, and 4.7.4 requirements for signing the reports, keeping them available on site, and retaining copies.

4.6.4 Based on the results of your inspection:

a. Complete any necessary maintenance repairs or replacements under Part 2.1.4 or under Part 5, whichever applies; and

b. Modify your SWPPP site map in accordance with Part 7.4.1 to reflect changes to your stormwater controls that are no longer accurately reflected on the current site map.

4.7 INSPECTION REPORT

4.7.1 You must complete an inspection report within 24 hours of completing any site inspection. Each inspection report (except for dewatering inspection reports, which are covered in Part 4.6.3) must include the following:

a. The inspection date;

b. Names and titles of personnel making the inspection;

c. A summary of your inspection findings, covering at a minimum the observations you made in accordance with Part 4.6, including any problems found during your inspection that make it necessary to perform routine maintenance pursuant to Part 2.1.4b or corrective action pursuant to Part 5. Include also any documentation as to why the corrective action procedures under Part 5 are unnecessary to fix a problem that repeatedly occurs as described in Part 2.1.4c;

d. If you are inspecting your site at the frequency specified in Part 4.2.2, Part 4.3, or Part 4.4.1b, and you conducted an inspection because of a storm event that produced rainfall measuring 0.25 inches or more within a 24-hour period, you must include the applicable rain gauge or weather station readings that triggered the inspection. Similarly, if you conducted an inspection because of a snowmelt discharge from a storm event that produced 3.25 inches or more of snow within a 24-hour period, you must include any measurements taken of snowfall at your site, or weather station information you relied on; and

[75] If the operator observes any of these indicators of pollutant discharge, corrective action is required consistent with Parts 5.1.5b and 5.2.2.

e. If you determined that it is unsafe to inspect a portion of your site, you must describe the reason you found it to be unsafe and specify the locations to which this condition applies.

4.7.2 Each inspection report must be signed by the operator's signatory in accordance with Appendix G, Part G.11 of this permit.

4.7.3 You must keep a copy of all inspection reports at the site or at an easily accessible location, so that it can be made immediately available at the time of an on-site inspection or upon request by EPA.[76]

4.7.4 You must retain all inspection reports completed for this Part for at least three (3) years from the date that your permit coverage expires or is terminated.

4.8 INSPECTIONS BY EPA

You must allow EPA, or an authorized representative of EPA, to conduct the following activities at reasonable times. To the extent that you are utilizing shared controls, that are not on site, to comply with this permit, you must make arrangements for EPA to have access at all reasonable times to those areas where the shared controls are located.

4.8.1 Enter onto all areas of the site, including any construction support activity areas covered by this permit, any off-site areas where shared controls are utilized to comply with this permit, discharge locations, adjoining waterbodies, and locations where records are kept under the conditions of this permit;

4.8.2 Access and copy any records that must be kept under the conditions of this permit;

4.8.3 Inspect your construction site, including any construction support activity areas covered by this permit (see Part 1.2.1c), any stormwater controls installed and maintained at the site, and any off-site shared controls utilized to comply with this permit; and

4.8.4 Sample or monitor for the purpose of ensuring compliance.

5 CORRECTIVE ACTIONS

5.1 CONDITIONS TRIGGERING CORRECTIVE ACTION.

You must take corrective action to address any of the following conditions identified at your site:

5.1.1 A stormwater control needs a significant repair or a new or replacement control is needed, or, in accordance with Part 2.1.4c, you find it necessary to repeatedly (i.e., three (3) or more times) conduct the same routine maintenance fix to the same control at the same location (unless you document in your inspection report under Part 4.7.1c that the specific reoccurrence of this same problem should still be addressed as a routine maintenance fix under Part 2.1.4); or

5.1.2 A stormwater control necessary to comply with the requirements of this permit was never installed, or was installed incorrectly; or

[76] Inspection reports may be prepared, signed, and kept electronically, rather than in paper form, if the records are: (a) in a format that can be read in a similar manner as a paper record; (b) legally dependable with no less evidentiary value than their paper equivalent; and (c) immediately accessible to the inspector during an inspection to the same extent as a paper copy stored at the site would be, if the records were stored in paper form. For additional guidance on the proper practices to follow for the electronic retention of inspection report records, refer to the Fact Sheet discussion related to Part 4.7.3.

5.1.3 Your discharges are not meeting applicable water quality standards;

5.1.4 A prohibited discharge has occurred (see Part 1.3); or

5.1.5 During discharge from site dewatering activities:

a. The weekly average of your turbidity monitoring results exceeds the 50 NTU benchmark (or alternate benchmark if approved by EPA pursuant to Part 3.3.2b); or

b. You observe or you are informed by EPA, State, or local authorities of the presence of the conditions specified in Part 4.6.3e.

5.2 CORRECTIVE ACTION DEADLINES

5.2.1 If responding to any of the Part 5.1.1, 5.1.2, 5.1.3, or 5.1.4 triggering conditions, you must:

a. Immediately take all reasonable steps to address the condition, including cleaning up any contaminated surfaces so the material will not discharge in subsequent storm events; and

b. When the problem does not require a new or replacement control or significant repair, the corrective action must be completed by the close of the next business day; or

c. When the problem requires a new or replacement control or significant repair, install the new or modified control and make it operational, or complete the repair, by no later than seven (7) calendar days from the time of discovery. If it is infeasible to complete the installation or repair within seven (7) calendar days, you must document in your records why it is infeasible to complete the installation or repair within the 7-day timeframe and document your schedule for installing the stormwater control(s) and making it operational as soon as feasible after the 7-day timeframe. Where these actions result in changes to any of the stormwater controls or procedures documented in your SWPPP, you must modify your SWPPP accordingly within seven (7) calendar days of completing this work.

5.2.2 If responding to either of the Part 5.1.5 triggering conditions related to site dewatering activities, you must:

a. Immediately take all reasonable steps to minimize or prevent the discharge of pollutants until you can implement a solution, including shutting off the dewatering discharge as soon as possible depending on the severity of the condition[77] taking safety considerations into account;

b. Determine whether the dewatering controls are operating effectively and whether they are causing the conditions; and

c. Make any necessary adjustments, repairs, or replacements to the dewatering controls to lower the turbidity levels below the benchmark or remove the visible plume or sheen.

[77] For instance, if the weekly average of your turbidity monitoring results or a single sample is extremely high (e.g., a single turbidity sample results in 355 NTUs or higher), you should take action to safely shut off the discharge so that you can evaluate the cause of the high turbidity. Note: A single turbidity sample of 355 NTUs or higher means that the weekly average turbidity value will exceed 50 NTU regardless of the turbidity values the other days during the week.

When you have completed these steps and made any changes deemed necessary, you may resume discharging from your dewatering activities.

5.3 CORRECTIVE ACTION REQUIRED BY EPA

You must comply with any corrective actions required by EPA as a result of permit violations found during an inspection carried out under Part 4.8.

5.4 CORRECTIVE ACTION LOG

5.4.1 For each corrective action taken in accordance with this Part, you must record the following in a corrective action log:

- **a.** Within 24 hours of identifying the corrective action condition, document the specific condition and the date and time it was identified.
- **b.** Within 24 hours of completing the corrective action (in accordance with the deadlines in Part 5.2), document the actions taken to address the condition, including whether any SWPPP modifications are required.

5.4.2 Each entry into the corrective action log, consisting of the information required by both Parts 5.4.1a and 5.4.1b, must be signed by the operator's signatory in accordance with Appendix G, Part G.11.2 of this permit.

5.4.3 You must keep a copy of the corrective action log at the site or at an easily accessible location, so that it can be made immediately available at the time of an on-site inspection or upon request by EPA.[78]

5.4.4 You must retain the corrective action log for at least three (3) years from the date that your permit coverage expires or is terminated.

6 STORMWATER TEAM FORMATION/STAFF TRAINING REQUIREMENTS

6.1 STORMWATER TEAM

Each operator, or group of multiple operators, must assemble a "stormwater team" that will be responsible for carrying out activities necessary to comply with this permit. The stormwater team must include the following people:

- **a.** Personnel who are responsible for the design, installation, maintenance, and/or repair of stormwater controls (including pollution prevention controls);
- **b.** Personnel responsible for the application and storage of treatment chemicals (if applicable);
- **c.** Personnel who are responsible for conducting inspections as required in Part 4.1; and
- **d.** Personnel who are responsible for taking corrective actions as required in Part 5.

Members of the stormwater team must be identified in the SWPPP pursuant to Part 7.2.2.

[78] The corrective action log may be prepared, signed, and kept electronically, rather than in paper form, if the records are: (a) in a format that can be read in a similar manner as a paper record; (b) legally dependable with no less evidentiary value than their paper equivalent; and (c) immediately accessible to the inspector during an inspection to the same extent as a paper copy stored at the site would be, if the records were stored in paper form. For additional guidance on the proper practices to follow for the electronic retention of corrective action log records, refer to the Fact Sheet discussion related to Part 4.7.3.

6.2 GENERAL TRAINING REQUIREMENTS FOR STORMWATER TEAM MEMBERS

Prior to the commencement of construction activities, you must ensure that all persons[79] assigned to the stormwater team understand the requirements of this permit and their specific responsibilities with respect to those requirements, including the following related to the scope of their job duties:

a. The permit requirements and deadlines associated with installation, maintenance, and removal of stormwater controls, as well as site stabilization;

b. The location of all stormwater controls on the site required by this permit and how they are to be maintained;

c. The proper procedures to follow with respect to the permit's pollution prevention requirements; and

d. When and how to conduct inspections, record applicable findings, and take corrective actions. Specific training requirements for persons conducting site inspections are included in Part 6.3.

You are responsible for ensuring that all activities on the site comply with the requirements of this permit. You are not required to provide or document formal training for subcontractors or other outside service providers (unless the subcontractors or outside service providers are responsible for conducting the inspections required in Part 4, in which case you must provide such documentation consistent with Part 7.2.2), but you must ensure that such personnel understand any requirements of this permit that may be affected by the work they are subcontracted to perform.

6.3 TRAINING REQUIREMENTS FOR PERSONS CONDUCTING INSPECTIONS

For projects that receive coverage under this permit on or after February 17, 2023, to be considered a qualified person under Part 4.1 for conducting inspections under Part 4, you must, at a minimum, either:

a. Have completed the EPA construction inspection course developed for this permit and have passed the exam; or

b. Hold a current valid construction inspection certification or license from a program that, at a minimum, covers the following:[80]

- **i.** Principles and practices of erosion and sediment control and pollution prevention practices at construction sites;
- **ii.** Proper installation and maintenance of erosion and sediment controls and pollution prevention practices used at construction sites; and
- **iii.** Performance of inspections, including the proper completion of required reports and documentation, consistent with the requirements of Part 4.

[79] If the person requiring training is a new employee who starts after you commence construction activities, you must ensure that this person has the proper understanding as required above prior to assuming particular responsibilities related to compliance with this permit. For emergency-related projects, the requirement to train personnel prior to commencement of construction activities does not apply, however, such personnel must have the required training prior to NOI submission.

[80] If one of the following topics (e.g., installation and maintenance of pollution prevention practices) is not covered by the non-EPA training program, you may consider supplementing the training with the analogous module of the EPA course (e.g., Module 4) that covers the missing topic.

For projects that receive coverage under this permit prior to February 17, 2023, any personnel conducting site inspections pursuant to Part 4 on your site must, at a minimum, be a person knowledgeable in the principles and practice of erosion and sediment controls and pollution prevention, who possesses the appropriate skills and training to assess conditions at the construction site that could impact stormwater quality, and the appropriate skills and training to assess the effectiveness of any stormwater controls selected and installed to meet the requirements of this permit.[81]

6.4 STORMWATER TEAM'S ACCESS TO PERMIT DOCUMENTS

Each member of the stormwater team must have easy access to an electronic or paper copy of applicable portions of this permit, the most updated copy of your SWPPP, and other relevant documents or information that must be kept with the SWPPP.

7 STORMWATER POLLUTION PREVENTION PLAN (SWPPP)

7.1 GENERAL REQUIREMENTS

All operators associated with a construction site under this permit must develop a SWPPP consistent with the requirements in Part 7 prior to their submittal of the NOI.[82, 83, 84] The SWPPP must be kept up-to-date throughout coverage under this permit.

If a SWPPP was prepared under a previous version of this permit, the operator must review and update the SWPPP to ensure that this permit's requirements are addressed prior to submitting an NOI for coverage under this permit.

7.2 SWPPP CONTENTS

At a minimum, the SWPPP must include the information specified in this Part and as specified in other parts of this permit.

7.2.1 All Site Operators. Include a list of all other operators who will be engaged in construction activities at the site, and the areas of the site over which each operator has control.

[81] If you receive coverage for a project prior to February 17, 2023, and construction activities for the same project will continue after February 17, 2023, the personnel conducting inspections do not need to take the additional training specified in Parts 6.3a and 6.3b for inspections conducted on the project site. If the same operator obtains coverage for a different project on or after February 17, 2023, personnel conducting inspections would be required to meet the requirements for a qualified person by completing the training in either Part 6.3a or Part 6.3b.

[82] The SWPPP does not establish the effluent limits and/or other permit terms and conditions that apply to your site's discharges; these limits, terms, and conditions are established in this permit.

[83] Where there are multiple operators associated with the same site, they may develop a group SWPPP instead of multiple individual SWPPPs. Regardless of whether there is a group SWPPP or multiple individual SWPPPs, each operator is responsible for compliance with the permit's terms and conditions. In other words, if Operator A relies on Operator B to satisfy its permit obligations, Operator A does not have to duplicate those permit-related functions if Operator B is implementing them such that both operators are in compliance with the permit. However, Operator A remains responsible for permit compliance if Operator B fails to take actions necessary for Operator A to comply with the permit. In addition, all operators must ensure, either directly or through coordination with other operators, that their activities do not cause a violation or compromise any other operators' controls and/or any shared controls. See also footnote 60.

[84] There are a number of commercially available products to assist operators in developing the SWPPP, as well as companies that can be hired to help develop a site-specific SWPPP. The permit does not state which are recommended, nor does EPA endorse any specific products or vendors. Where operators choose to rely on these products or services, the choice of which ones to use to comply with the requirements of this Part is a decision for the operator alone.

7.2.2 Stormwater Team. Identify the personnel (by name and position) that you have made part of the stormwater team pursuant to Part 6.1, as well as their individual responsibilities, including which members are responsible for conducting inspections.

Include verification that each member of the stormwater team has received the training required by Part 6.2. Include documentation that members of the stormwater team responsible for conducting inspections pursuant to Part 4 have received the training required by Part 6.3. If personnel on your team elect to complete the EPA inspector training program pursuant to Part 6.3a, you must include copies of the certificate showing that the relevant personnel have completed the training and passed the exam. If personnel on your team elect to complete a non-EPA inspector training program pursuant to Part 6.3b, you must include documentation showing that these persons have successfully completed the program and their certification or license is still current. You must also confirm that the non-EPA inspector training program satisfies the minimum elements for such programs in Part 6.3b.

7.2.3 Nature of Construction Activities. Include the following:

- **a.** A description of the nature of your construction activities, including the age or dates of past renovations for structures that are undergoing demolition;
- **b.** The size of the property (in acres or length in miles if a linear construction site);
- **c.** The total area expected to be disturbed by the construction activities (to the nearest quarter acre or nearest quarter mile if a linear construction site);
- **d.** A description of any on-site and off-site construction support activity areas covered by this permit (see Part 1.2.1c);
- **e.** The maximum area expected to be disturbed at any one time, including on-site and off-site construction support activity areas;
- **f.** A description and projected schedule for the following:[85]
  - **i.** Commencement of construction activities in each portion of the site, including clearing and grubbing, mass grading, demolition activities, site preparation (i.e., excavating, cutting and filling), final grading, and creation of soil and vegetation stockpiles requiring stabilization;
  - **ii.** Temporary or permanent cessation of construction activities in each portion of the site;
  - **iii.** Temporary or final stabilization of exposed areas for each portion of the site; and
  - **iv.** Removal of temporary stormwater controls and construction equipment or vehicles, and the cessation of construction-related pollutant-generating activities.

[85] If plans change due to unforeseen circumstances or for other reasons, the requirement to describe the sequence and estimated dates of construction activities is not meant to "lock in" the operator to meeting these dates. When departures from initial projections are necessary, this should be documented in the SWPPP itself, or in associated records, as appropriate.

g. A list and description of all pollutant-generating activities[86] on the site. For each pollutant-generating activity, include an inventory of pollutants or pollutant constituents (e.g., *sediment, fertilizers, pesticides, paints, caulks, sealants, fluorescent light ballasts, contaminated substrates, solvents, fuels*) associated with that activity, which could be discharged in stormwater from your construction site. You must take into account where potential spills and leaks could occur that contribute pollutants to stormwater discharges, and any known hazardous or toxic substances, such as PCBs and asbestos, that will be disturbed or removed during construction;

h. Business days and hours for the project;

i. If you are conducting construction activities in response to a public emergency (see Part 1.4), a description of the cause of the public emergency *(*e.g., *mud slides, earthquake, extreme flooding conditions, widespread disruption in essential public services)*, information substantiating its occurrence *(*e.g., *State disaster declaration or similar State or local declaration)*, and a description of the construction necessary to reestablish affected public services.

7.2.4 Site Map. Include a legible map, or series of maps, showing the following features of the site:

a. Boundaries of the property;

b. Locations where construction activities will occur, including:

i. Locations where earth-disturbing activities will occur (note any phasing), including any demolition activities;

ii. Approximate slopes before and after major grading activities (note any steep slopes (as defined in Appendix A));

iii. Locations where sediment, soil, or other construction materials will be stockpiled;

iv. Any receiving water crossings;

v. Designated points where vehicles will exit onto paved roads;

vi. Locations of structures and other impervious surfaces upon completion of construction; and

vii. Locations of on-site and off-site construction support activity areas covered by this permit (see Part 1.2.1c).

c. Locations of any receiving waters within the site and all receiving waters within one mile downstream of the site's discharge point(s). Also identify if any of these receiving waters are listed as impaired or are identified as a Tier 2, Tier 2.5, or Tier 3 water;

d. Any areas of Federally listed critical habitat within the action area of the site as defined in Appendix A;

e. Type and extent of pre-construction cover on the site (e.g., vegetative cover, forest, pasture, pavement, structures);

f. Drainage patterns of stormwater and authorized non-stormwater before and after major grading activities;

[86] Examples of pollutant-generating activities include paving operations; concrete, paint, and stucco washout and waste disposal; solid waste storage and disposal; and dewatering activities.

g. Stormwater and authorized non-stormwater discharge locations, including:

i. Locations where stormwater and/or authorized non-stormwater will be discharged to storm drain inlets, including a notation of whether the inlet conveys stormwater to a sediment basin, sediment trap, or similarly effective control;[87]

ii. Locations where stormwater or authorized non-stormwater will be discharged directly to receiving waters (i.e., not via a storm drain inlet); and

iii. Locations where turbidity benchmark monitoring will take place to comply with Part 3.3, if applicable to your site.

h. Locations of all potential pollutant-generating activities identified in Part 7.2.3g;

i. Designated areas where construction wastes that are covered by the exception in Part 2.3.3e.ii because they are not pollutant-generating will be stored;

j. Locations of stormwater controls, including natural buffer areas and any shared controls utilized to comply with this permit; and

k. Locations where polymers, flocculants, or other treatment chemicals will be used and stored.

7.2.5 Non-Stormwater Discharges. Identify all authorized non-stormwater discharges in Part 1.2.2 that will or may occur.

7.2.6 Description of Stormwater Controls.

a. For each of the Part 2.2 erosion and sediment control requirements, Part 2.3 pollution prevention requirements, and Part 2.4 construction dewatering requirements, as applicable to your site, you must include the following:

i. A description of the specific control(s) to be implemented to meet these requirements;

ii. The design specifications for controls described in Part 7.2.6a.i (including references to any manufacturer specifications and/or erosion and sediment control manuals/ordinances relied upon);[88]

iii. Routine stormwater control maintenance specifications; and

iv. The projected schedule for stormwater control installation/implementation.

b. You must also include any of the following additional information as applicable.

i. Natural buffers and/or equivalent sediment controls (see Part 2.2.1 and Appendix F). You must include the following:

(a) The compliance alternative to be implemented;

(b) If complying with alternative 2, the width of natural buffer retained;

[87] The requirement to show storm drain inlets in the immediate vicinity of the site on your site map only applies to those inlets that are easily identifiable from your site or from a publicly accessible area immediately adjacent to your site.

[88] Design specifications may be found in manufacturer specifications and/or in applicable erosion and sediment control manuals or ordinances. Any departures from such specifications must reflect good engineering practice and must be explained in the SWPPP.

(c) If complying with alternative 2 or 3, the erosion and sediment control(s) you will use to achieve an equivalent sediment reduction, and any information you relied upon to demonstrate the equivalency;

(d) If complying with alternative 3, a description of why it is infeasible for you to provide and maintain an undisturbed natural buffer of any size;

(e) For "linear construction sites" where it is infeasible to implement compliance alternative 1, 2, or 3, a rationale for this determination, and a description of any buffer width retained and/or supplemental erosion and sediment controls installed; and

(f) A description of any disturbances that are exempt under Part 2.2.1 that occur within 50 feet of a receiving water.

ii. Perimeter controls for a "linear construction site" (see Part 2.2.3d). For areas where perimeter controls are not feasible, include documentation to support this determination and a description of the other practices that will be implemented to minimize discharges of pollutants in stormwater associated with construction activities.

Note: Routine maintenance specifications for perimeter controls documented in the SWPPP must include the Part 2.2.3c.i requirement that sediment be removed before it has accumulated to one-half of the above-ground height of any perimeter control.

iii. Sediment track-out controls (see Parts 2.2.4b and 2.2.4c). Document the specific stabilization techniques and/or controls that will be implemented to remove sediment prior to vehicle exit.

iv. Inlet protection measures (see Part 2.2.10a). Where inlet protection measures are not required because the storm drain inlets to which your site discharges are conveyed to a sediment basin, sediment trap, or similarly effective control, include a short description of the control that receives the stormwater flow from the site.

v. Sediment basins (see Part 2.2.12). In circumstances where it is infeasible to utilize outlet structures that withdraw water from the surface, include documentation to support this determination, including the specific conditions or time periods when this exception will apply.

vi. Treatment chemicals (see Part 2.2.13), you must include the following:

(a) A listing of the soil types that are expected to be exposed during construction in areas of the project that will drain to chemical treatment systems. Also include a listing of soil types expected to be found in fill material to be used in these same areas, to the extent you have this information prior to construction;

(b) A listing of all treatment chemicals to be used at the site and why the selection of these chemicals is suited to the soil characteristics of your site;

(c) If the applicable EPA Regional Office authorized you to use cationic treatment chemicals for sediment control, include the specific controls and implementation procedures designed to ensure that your use of cationic

treatment chemicals will not lead to a discharge that does not meet water quality standards;

(d) The dosage of all treatment chemicals to be used at the site or the methodology to be used to determine dosage;

(e) Information from any applicable Safety Data Sheet (SDS);

(f) Schematic drawings of any chemically enhanced stormwater controls or chemical treatment systems to be used for application of the treatment chemicals;

(g) A description of how chemicals will be stored consistent with Part 2.2.13c;

(h) References to applicable State or local requirements affecting the use of treatment chemicals, and copies of applicable manufacturer's specifications regarding the use of your specific treatment chemicals and/or chemical treatment systems; and

(i) A description of the training that personnel who handle and apply chemicals have received prior to permit coverage, or will receive prior to use of the treatment chemicals at your site.

vii. Stabilization measures (see Part 2.2.14). You must include the following:

(a) The specific vegetative and/or non-vegetative practices that will be used;

(b) The stabilization deadline that will be met in accordance with Part 2.2.14;

(c) If complying with the deadlines for sites in arid, semi-arid, or drought-stricken areas, the beginning and ending dates of the seasonally dry period (as defined in Appendix A)[89] and the schedule you will follow for initiating and completing vegetative stabilization; and

(d) If complying with deadlines for sites affected by unforeseen circumstances that delay the initiation and/or completion of vegetative stabilization, document the circumstances and the schedule for initiating and completing stabilization.

viii. Spill prevention and response procedures (see Parts 1.3.5, 2.3.3c, 2.3.3d, and 2.3.6). You must include the following:

(a) Procedures for expeditiously stopping, containing, and cleaning up spills, leaks, and other releases. Identify the name or position of the employee(s) responsible for detection and response of spills or leaks; and

(b) Procedures for notification of appropriate facility personnel, emergency response agencies, and regulatory agencies where a leak, spill, or other release containing a hazardous substance or oil in an amount equal to or in excess of a reportable quantity consistent with Part 2.3.6 and established under either 40 CFR part 110, 40 CFR part 117, or 40 CFR part 302, occurs

[89] See footnote 44.

during a 24-hour period. Contact information must be in locations that are readily accessible and available to all employees.

You may also reference the existence of SPCC plans developed for the construction activity under Section 311 of the CWA, or spill control programs otherwise required by an NPDES permit for the construction activity, provided that you keep a copy of that other plan on site.[90]

ix. Waste management procedures (see Part 2.3.3). Describe the procedures you will follow for handling, storing, and disposing of all wastes generated at your site consistent with all applicable Federal, State, Tribal, and local requirements, including clearing and demolition debris, sediment removed from the site, construction and domestic waste, hazardous or toxic waste, and sanitary waste. You must also include the following additional information:

(a) If site constraints prevent you from storing chemical containers 50 feet away from receiving waters or the other site drainage features as required in Part 2.3.3c.ii(b), document in your SWPPP the specific reasons why the 50-foot setback is not feasible, and how you will store containers as far away as the site permits; and

(b) If there are construction wastes that are subject to the exception in Part 2.3.3e.ii, describe the specific wastes that will be stored on your site.

x. Application of fertilizers (see Part 2.3.5). Document any departures from the manufacturer specifications where appropriate.

7.2.7 Procedures for Inspection, Maintenance, and Corrective Action. Describe the procedures you will follow for maintaining your stormwater controls, conducting site inspections, and, where necessary, taking corrective actions, in accordance with Part 2.1.4, Part 4, and Part 5 of this permit, accordingly. Also include:

a. The inspection schedule you will follow, which is based on whether your site is subject to Part 4.2 or Part 4.3, or whether your site qualifies for any of the reduced inspection frequencies in Part 4.4;

b. If you will be conducting inspections in accordance with the inspection schedule in Part 4.2.2, Part 4.3, or Part 4.4.1b, the location of the rain gauge or the address of the weather station you will be using to obtain rainfall data;

c. If you will be reducing your inspection frequency in accordance with Part 4.4.1b, the beginning and ending dates of the seasonally defined arid period for your area or the valid period of drought;

d. If you will be reducing your inspection frequency in accordance with Part 4.4.3, the beginning and ending dates of frozen conditions on your site; and

e. Any maintenance or inspection checklists or other forms that will be used.

7.2.8 Procedures for Turbidity Benchmark Monitoring from Dewatering Discharges (if applicable). If you are required to comply with the Part 3.3 turbidity benchmark

[90] Even if you already have an SPCC or other spill prevention plan in existence, your plans will only be considered adequate if they meet all of the requirements of this Part, either as part of your existing plan or supplemented as part of the SWPPP.

monitoring requirements, describe the procedures you will follow to collect and evaluate samples, report results to EPA and keep records of monitoring information, and take corrective action when necessary. Include the specific type of turbidity meter you will use for monitoring, as well as any manuals or manufacturer instructions on how to operate and calibrate the meter. Describe any coordinating arrangement you may have with any other permitted operators on the same site with respect to compliance with the turbidity monitoring requirements, including which parties are tasked with specific responsibilities. If EPA has approved of an alternate turbidity benchmark pursuant to Part 3.3.2b, include any data and other documentation you relied on to request use of the specific alternative benchmark.

7.2.9 Compliance with Other Requirements.

a. Threatened and Endangered Species Protection. Include documentation required in the Endangered Species Protection section of the NOI in NeT, or the ESA worksheet in Appendix D, supporting your eligibility with regard to the protection of threatened and endangered species and designated critical habitat.

b. Historic Properties. Include documentation required in Appendix E supporting your eligibility with regard to the protection of historic properties.

c. Safe Drinking Water Act Underground Injection Control (UIC) Requirements for Certain Subsurface Stormwater Controls. If you are using any of the following stormwater controls at your site, document any contact you have had with the applicable State agency[91] or EPA Regional Office responsible for implementing the requirements for underground injection wells in the Safe Drinking Water Act and EPA's implementing regulations at 40 CFR § 144 -147. Such controls would generally be considered Class V UIC wells:

i. Infiltration trenches (if stormwater is directed to any bored, drilled, driven shaft or dug hole that is deeper than its widest surface dimension, or has a subsurface fluid distribution system);

ii. Commercially manufactured pre-cast or pre-built proprietary subsurface detention vaults, chambers, or other devices designed to capture and infiltrate stormwater flow; and

iii. Drywells, seepage pits, or improved sinkholes (if stormwater is directed to any bored, drilled, driven shaft or dug hole that is deeper than its widest surface dimension, or has a subsurface fluid distribution system).

7.2.10 SWPPP Certification. Your signatory must sign and date your SWPPP in accordance with Appendix G, Part G.11.

7.2.11 Post-Authorization Additions to the SWPPP. Once you are authorized for coverage under this permit, you must include the following documents as part of your SWPPP:

a. A copy of your NOI submitted to EPA along with any correspondence exchanged between you and EPA related to coverage under this permit;

b. A copy of the acknowledgment letter you receive from NeT assigning your NPDES ID (i.e.*, permit tracking number*);

[91] For State UIC program contacts, refer to the following EPA website: https://www.epa.gov/uic.

c. A copy of this permit (an electronic copy easily available to the stormwater team is also acceptable).

7.3 ON-SITE AVAILABILITY OF YOUR SWPPP

You must keep a current copy of your SWPPP at the site or at an easily accessible location so that it can be made available at the time of an on-site inspection or upon request by EPA; a State, Tribal, or local agency approving stormwater management plans; the operator of a storm sewer system receiving discharges from the site; or representatives of the U.S. Fish and Wildlife Service (USFWS) or the National Marine Fisheries Service (NMFS).[92]

EPA may provide access to portions of your SWPPP to a member of the public upon request. Confidential Business Information (CBI) will be withheld from the public, but may not be withheld from EPA, USFWS, or NMFS.[93]

If an on-site location is unavailable to keep the SWPPP when no personnel are present, notice of the plan's location must be posted near the main entrance of your construction site.

7.4 SWPPP MODIFICATIONS

7.4.1 You must modify your SWPPP, including the site map(s), within seven (7) days of any of the following conditions:

a. Whenever new operators become active in construction activities on your site, or you make changes to your construction plans, stormwater controls, or other activities at your site that are no longer accurately reflected in your SWPPP. This includes changes made in response to corrective actions triggered under Part 5. You do not need to modify your SWPPP if the estimated dates in Part 7.2.3f change during the course of construction;

b. To reflect areas on your site map where operational control has been transferred (and the date of transfer) since initiating permit coverage;

c. If inspections or investigations by EPA or its authorized representatives determine that SWPPP modifications are necessary for compliance with this permit;

d. Where EPA determines it is necessary to install and/or implement additional controls at your site in order to meet the requirements of this permit, the following must be included in your SWPPP:

i. A copy of any correspondence describing such measures and requirements; and

[92] The SWPPP may be prepared, signed, and kept electronically, rather than in paper form, if the records are: (a) in a format that can be read in a similar manner as a paper record; (b) legally dependable with no less evidentiary value than their paper equivalent; and (c) immediately accessible to the inspector during an inspection to the same extent as a paper copy stored at the site would be, if the records were stored in paper form. For additional guidance on the proper practices to follow for the electronic retention of the SWPPP, refer to the Fact Sheet discussion related to Part 4.7.3.

[93] Information covered by a claim of confidentiality will be disclosed by EPA only to the extent of, and by means of, the procedures set forth in 40 CFR part 2, Subpart B. In general, submitted information protected by a business confidentiality claim may be disclosed to other employees, officers, or authorized representatives of the United States concerned with implementing the CWA. The authorized representatives, including employees of other executive branch agencies, may review CBI during the course of reviewing draft regulations.

ii. A description of the controls that will be used to meet such requirements.

e. To reflect any revisions to applicable Federal, State, Tribal, or local requirements that affect the stormwater controls implemented at the site; and

f. If applicable, if a change in chemical treatment systems or chemically enhanced stormwater control is made, including use of a different treatment chemical, different dosage rate, or different area of application.

7.4.2 You must maintain records showing the dates of all SWPPP modifications. The records must include the name of the person authorizing each change (see Part 7.2.9 above) and a brief summary of all changes.

7.4.3 All modifications made to the SWPPP consistent with Part 7.4 must be authorized by a person identified in Appendix G, Part G.11.b.

7.4.4 Upon determining that a modification to your SWPPP is required, if there are multiple operators covered under this permit, you must immediately notify any operators who may be impacted by the change to the SWPPP.

8 HOW TO TERMINATE COVERAGE

Until you terminate coverage under this permit, you must comply with all conditions and effluent limitations in the permit. To terminate permit coverage, you must submit to EPA a complete and accurate Notice of Termination (NOT), which certifies that you have met the requirements for terminating in Part 8.

8.1 MINIMUM INFORMATION REQUIRED IN NOT

8.1.1 NPDES ID (i.e*., permit tracking number)* provided by EPA when you received coverage under this permit;

8.1.2 Basis for submission of the NOT (see Part 8.2);

8.1.3 Operator contact information;

8.1.4 Name of site and address (or a description of location if no street address is available); and

8.1.5 NOT certification.

8.2 CONDITIONS FOR TERMINATING CGP COVERAGE

You may terminate CGP coverage only if one or more of the conditions in Parts 8.2.1, 8.2.2, or 8.2.3 has occurred. Until your termination is effective consistent with Part 8.5, you must continue to comply with the conditions of this permit.

8.2.1 You have completed all construction activities at your site and, if applicable, construction support activities covered by this permit (see Part 1.2.1c), and you have met all of the following requirements:

a. For any areas that (1) were disturbed during construction, (2) are not covered by permanent structures, and (3) over which you had control during the construction activities, you have met the requirements for final vegetative or non-vegetative stabilization in Part 2.2.14c.

To document that you have met these stabilization requirements, you must take either ground or aerial photographs that show your site's compliance with the Part 2.2.14 stabilization requirements and submit them with your NOT. If any portion of your

site is covered by one of the exceptions in Part 2.2.14c.iii, indicate which exception applies and include a supplementary explanation with your photographs that provides the necessary context for why this portion of the site is in compliance with the final stabilization criteria even though it appears to be unstabilized. You are not required to take photographs of every distinct part of your site that is being stabilized, however, the conditions of the site portrayed in any photographs that are submitted must be substantially similar[94] to those of the areas that are not photographed. You must also comply with the following related to these photographs:

i. Take photographs both before and after the site has met the final stabilization criteria in Part 2.2.14c;

ii. All photographs must be clear and in focus, and in the original format and resolution; and

iii. Include the date each photograph was taken, and a brief description of the area of the site captured by the photograph (e.g., photo shows application of seed and erosion control mats to remaining exposed surfaces on northeast corner of site).

b. You have removed and properly disposed of all construction materials, waste and waste handling devices, and have removed all equipment and vehicles that were used during construction, unless intended for long-term use following your termination of permit coverage;

c. You have removed all stormwater controls that were installed and maintained during construction, except those that are intended for long-term use following your termination of permit coverage or those that are biodegradable (as defined in Appendix A); and

d. You have removed all potential pollutants and pollutant-generating activities associated with construction, unless needed for long-term use following your termination of permit coverage; or

8.2.2 You have transferred control of all areas of the site for which you are responsible under this permit to another operator, and that operator has submitted an NOI and obtained coverage under this permit; or

8.2.3 Coverage under an individual or alternative general NPDES permit has been obtained.

8.3 HOW TO SUBMIT YOUR NOT

You must use EPA's NPDES eReporting Tool (NeT) to electronically prepare and submit an NOT for the 2022 CGP.

To access NeT, go to https://cdx.epa.gov/cdx.

Waivers from electronic reporting may be granted as specified in Part 1.4.2. If the EPA Regional Office grants you approval to use a paper NOT, and you elect to use it, you must complete the form in Appendix I.

[94] Stabilization conditions that are substantially similar would include areas that are using the same type of stabilization measures and that have similar slopes, soils, and topography, and have achieved the same level of stabilization.

8.4 DEADLINE FOR SUBMITTING THE NOT

You must submit an NOT within 30 calendar days after any one of the conditions in Part 8.2 occurs.

8.5 EFFECTIVE DATE OF TERMINATION OF COVERAGE

Your authorization to discharge under this permit terminates at midnight of the calendar day that a complete NOT is submitted to EPA.

9 PERMIT CONDITIONS APPLICABLE TO SPECIFIC STATES, INDIAN COUNTRY LANDS, OR TERRITORIES

The provisions in this Part provide additions to the applicable conditions of this permit to reflect specific additional conditions required as part of the State or Tribal CWA Section 401 certification process, or the Coastal Zone Management Act (CZMA) certification process, or as otherwise established by the permitting authority. The specific additional revisions and requirements only apply to activities in those specific States, Indian country, and areas in certain States with Federal Facilities or areas subject to construction projects by Federal Operators. States, Indian country, and other areas not included in this Part do not have any additions to the applicable conditions of this permit.

9.1 EPA REGION 1

9.1.1 NHR100000 State of New Hampshire

a. Should the permit coverage for an individual applicant be insufficient to achieve water quality standards, the New Hampshire Department of Environmental Services (NHDES) may prepare additional 401 certification conditions for that applicant. Any additional 401 certification conditions will follow all required NHDES public participation requirements.

b. If you disturb 100,000 square feet or more of contiguous area, you must also comply with RSA 485-A:17 and Env-Wq 1500, and, unless exempt, apply for an Alteration of Terrain (AoT) permit from NHDES. This requirement also applies to a lower disturbance threshold of 50,000 square feet or more when construction occurs within the protected shoreline under the Shoreland Water Quality Protection Act (see RSA 483-B and Env-Wq 1400). A permit application must also be filed if your project disturbs an area of greater than 2,500 square feet, is within 50 feet of any surface water, and has a flow path of 50 feet or longer disturbing a grade of 25 percent or greater. Project sites with disturbances smaller than those discussed above, that have the potential to adversely affect state surface waters, are subject to the conditions of an AoT General Permit by Rule (Env-Wq 1503.03).

c. You must determine that any excavation dewatering discharges are not contaminated before they will be authorized as an allowable non-stormwater discharge under this permit (see Part 1.2.2 of the Construction General Permit or CGP). In the absence of information demonstrating otherwise, the water is considered uncontaminated if there is no groundwater contamination within 1,000 feet of the groundwater dewatering location. Information on groundwater contamination can be generated over the Internet via the NHDES web site http:// des.nh.gov/ by using the One Stop Data Mapper. For a toxic substance included in the New Hampshire surface water quality standards, see Env-Wq 1703.21 (see https://www.des.nh.gov/sites/g/fi1es/ehbemt 341/files/documents/2020-01/Env-Wg

1700.pdf). If it is determined that the groundwater to be dewatered is near a remediation or other waste site, you must apply for the Remediation General Permit (see https://www3.epa.gov/region1/npdes/rgp.html)

d. As a minimum, you must treat any uncontaminated excavation "dewatering" discharges and "stormwater" discharges, as those terms are defined in Appendix A of the CGP, as necessary, to remove suspended solids and turbidity so that the surface waters receiving the construction discharges[95] meet New Hampshire surface water quality standards for turbidity (Env-Wq 1703.11 and Env-Wq 1703.03(c)(1)c), benthic deposits (Env-Wq 1703.03(c)(1)a), and Env-Wq 1703.08) and foam, debris, scum or other visible substances (i.e., plumes or visual turbidity)[96] (Env-Wq 1703.03(c)(1)b).

i. For all Construction Activities covered under this CGP, the following shall apply to ensure compliance with the aforementioned regulations for turbidity, benthic deposits and visible substances:

Unless otherwise specified, site inspection requirements shall comply with Part 4 of the CGP. As a minimum site inspection frequency shall be in accordance with Part 4.2.2 of the CGP (and Part 4.3.2 of the CGP for sites discharging dewatering water). Site inspection frequency may be reduced in accordance with Part 4.4 of the CGP (Reductions in Inspection Frequency). Monitoring of the receiving water for visible turbidity and benthic sediment deposits shall be conducted each site inspection and results reported in the Inspection Report required in Part 4.7 of the CGP. Should visible turbidity or benthic sediment deposits attributable or partly attributable to your construction activities be present in the receiving water, the "Corrective Actions" specified in Part 5 shall be immediately implemented to correct the water quality standard violations. In addition, daily monitoring (including photographs) of the receiving water shall be conducted until there is no visible turbidity or benthic deposits. Inspection Reports required in Part 4.7 of the CGP shall include, but not be limited to, the distance downstream and the percent of the river width[97] where visible turbidity was observed, and the period of time that the visible turbidity persisted. A copy of the Inspection Report(s) shall be made available to NHDES within 24 hours of receiving a written request from NHDES.

ii. For Construction Activities, disturbing 5 acres or more of land at any one time (excluding areas that have been completely stabilized in accordance with the final stabilization criteria specified in Part 2.2.14.c of the CGP), the following shall

[95] Construction Discharges include uncontaminated "dewatering" and "stormwater" discharges as those terms are defined in Appendix A of the CGP. Controlled construction discharges are construction discharges where the rate of flow can be regulated such as from a construction settling basin or NHDES approved flocculation system.

[96] For the definition of visual turbidity, see the definition for "Non-Turbid" in Appendix A of the CGP, which states the following:" "Non-Turbid" - a discharge that is free from visual turbidity. For the purposes of this permit, visual turbidity refers to a sediment plume or other cloudiness in the water caused by sediment that can be identified by an observer." *[EPA interprets the text of this footnote as intending to reference the Appendix A definitions of "visual turbidity" and "non-turbid" in the final permit.]*

[97] The distance downstream and the percent of river width where visible turbidity (i.e., plume) is observed is required to determine the extent of the river affected and to determine if there was a "zone of passage" (i.e., a portion of the receiving water where there was no visible turbidity where mobile organisms could pass without being adversely impacted). The percent of river width affected is equal 100 multiplied by the width of the plume (in feet) divided by the width of the receiving water (in feet).

apply to ensure compliance with the aforementioned regulations for turbidity, benthic deposits and visible substances.

Item 9.1.1.d.i) above shall apply to all construction discharges and the minimum site inspection frequency shall comply with Part 4.3.1 of the CGP (and Part 4.3.2 of the CGP for sites discharging dewatering water). Site inspection frequency may be reduced in accordance with Part 4.4 of the CGP (Reductions in Inspection Frequency).

With regards to controlled construction discharges, if there is no visible turbidity (i.e., plumes) or benthic deposits, and, in the absence of information demonstrating otherwise, turbidity measurements of less than or equal to 50 nephelometric turbidity units (NTU) in the controlled construction discharges at the outlet prior to mixing with the receiving surface waters, shall be presumed to meet New Hampshire surface water quality standards for the parameters listed above. As a minimum, the controlled construction discharges must be sampled at each site inspection.

If any controlled construction discharge exceeds 50 NTU, or if visible turbidity or benthic sediment deposits attributable or partly attributable to any construction discharge are observed in the receiving water, then the "Corrective Actions" specified in Part 5 of the CGP shall be immediately implemented.

In addition, should such violation occur, and, in order to determine compliance with surface water quality standards for turbidity (Env-Wq 1703.11 and Env-Wq 1703.03(c)(1)c), benthic deposits (Env-Wq 1703.03(c)(1)a), and Env-Wq 1703.08) and foam, debris, scum or other visible substances (Env-Wq 1703.03(c)(1)b)), turbidity monitoring shall be immediately implemented as specified below:

Turbidity samples of the receiving water shall be immediately taken in the receiving water upstream and beyond the influence of the construction activity, and, unless a mixing zone[98] is approved by NHDES, no more than 75 feet downstream of each controlled construction discharge that exceeded 50 NTU and no more than 75 feet downstream of each construction discharge that caused visible turbidity.

Downstream samples shall be taken at locations in the receiving water that are most likely influenced by the discharge (e.g., if visible turbidity (i.e., a plume) is present, the sample shall be taken in the plume). Samples shall be collected a minimum of 2 times per day during the daylight hours at times when construction activities are most likely to cause turbidity in the receiving water and shall continue until the turbidity water quality standards are met in the receiving water (i.e., the difference between the upstream and downstream turbidity level is no greater than 10 NTU).

[98] Permittees may request a distance greater than 75 feet downstream of a construction discharge for determining compliance with turbidity standards in Class B surface waters, by submitting a mixing zone request to NHDES that complies with Env-Wq 1707.02. If a mixing zone is approved, NHDES is required to include conditions to ensure that the criteria on which the approval is based are met (Env-Wq 1707.03).

If water quality standards are not met during daylight hours on any day, sampling shall resume the next day and continue no fewer than 2 times per day until water quality standards are met. The date, time, location and results of turbidity measurements, as well as a summary identifying the cause of the violations, corrective actions that were implemented, the period of time that the receiving water exceeded turbidity standards and the distance downstream and the percent of the river width where visible turbidity was observed, and the period of time that the visible turbidity persisted, shall be recorded and included in the Inspection Report required in Part 4.7 of the CGP. Turbidity measurements shall be conducted via a field meter in accordance with the requirements for turbidity specified in Table 1B in 40 CFR 136.3 (see 40 CFR §136.3 Identification of test procedures - Code of Federal Regulations ecfr.io). Field meters shall be calibrated every day sampling is conducted and prior to the first sample.

e. Construction site owners and operators are encouraged to consider opportunities for post- construction groundwater recharge using infiltration best management practices (BMPs) during site design and preparation of the SWPPP in order to assure compliance with Env-Wq 1703.03 and Env-Wq 1703.11. If your construction site is in a town that is required to obtain coverage under the NPDES General Permit for discharges from Municipal Separate Storm Sewer Systems (MS4) you may be required to use such practices. The SWPPP must include a description of any on-site infiltration that will be installed as a post-construction stormwater management measure or reasons for not employing such measures such as 1) The facility is located in a wellhead protection area as defined in RSA 485- C:2; or 2) The facility is located in an area where groundwater has been reclassified to GAA, GA1 or GA2 pursuant to RSA 485-C and Env-DW 901; or 3) Any areas that would be exempt from the groundwater recharge requirements contained in Env-Wq 1507.04, including all land uses or activities considered to be a "High-load Area" (see Env-Wq 1502.30). For design considerations for infiltration measures see Env-Wq 1508.06. Note that there may be additional local requirements that fall under the NH MS4 permittee's Authorization to Discharge Permit for those regulated areas.

f. Appendix F of the CGP contains information regarding Tier 2, or high quality waters in the various states. ***[EPA notes that this information has now been moved to https://www.epa.gov/npdes/construction-general-permit-resources-tools-and-templates]*** Although there is no official list of tier 2 waters for New Hampshire, it can be assumed that all New Hampshire surface waters are tier 2 for turbidity unless 1) the surface water that you are proposing to discharge into is listed as impaired for turbidity in the states listing of impaired waters (see https://nhdes-surface-water-quality-assessment-site-nhdes.hub.arcgis.com/) or 2) sampling upstream of the proposed discharge location shows turbidity values greater than 10 NTU (Env-Wq 1703.11). A single grab sample collected during dry weather (no precipitation within 48 hours) is acceptable.

g. To ensure compliance with RSA 485-C, RSA 485-A, RSA 485-A:13, I(a), Env-Wq 1700 and Env-Wq 302, the following information may be requested by NHDES. This information must be kept on site unless you receive a written request from NHDES that it be sent to the address shown below in 9.1.1.h.

i. A list of all non-stormwater discharges that occur at the facility, including their source locations and the control measures being used (see Part 1.2.2 of the CGP).

ii. Records of sampling and analysis required for construction dewatering and stormwater discharges (see 9.1.1.d above).

h. All required or requested documents must be sent to: NH Department of Environmental Services, Watershed Management Bureau, P.O. Box 95 Concord, NH 03302-0095.

9.1.2 MAR100000 Commonwealth of Massachusetts (except Indian country)

a. All discharges covered by the Construction General Permit shall comply with the provisions pursuant to 314 CMR 3.00, 314 CMR 4.00, 314 CMR 9.00, including applicable construction stormwater standards and 310 CMR 10.00.

b. Pursuant to 314 CMR 3.11 (2)(a)6., and in accordance with MassDEP's obligation under 314 CMR 4.05(5)(e) to maintain surface waters free from pollutants in concentrations or combinations that are toxic to humans, aquatic life, or wildlife, permittees are prohibited from discharging dewatering water under the CGP from sites that are designated as Superfund/CERCLA or RCRA, and must make accommodations to dispose of the dewatering discharges appropriately, such as coverage under the Remediation General Permit (RGP).

c. Pursuant to 314 CMR 3.11 (2)(a), and in accordance with MassDEP's obligation to protect Outstanding Resource Waters under 314 CMR 4.04(3), applicants seeking coverage under the 2022 CGP that propose to carry out construction activities near Outstanding Resource Waters as identified in 314 CMR 4.06, shall submit to MassDEP for review:

i. a copy of the Stormwater Pollution Prevention Plan (SWPPP),

ii. a copy of the EPA NOI, and

iii. MassDEP's Stormwater BMP Checklist.

For purposes of this review, the permittee shall submit these documents to MassDEP at the same time they are submitted to EPA. Instructions on how to submit these documents to MassDEP and where to find the MassDEP Stormwater BMP Checklist and obtain authorization to discharge can be found here: https://www.mass.gov/how-to/wm-15-npdes-general-permit-notice-of- intent.

d. Pursuant to 314 CMR 3.11 (2)(a)6., and in accordance with MassDEP's obligation under 314 CMR 4.05(5)(e) to maintain surface waters free from pollutants in concentrations or combinations that are toxic to humans, aquatic life, or wildlife, applicants that propose to dewater under the 2022 CGP and plan to discharge to certain waters as described below, shall determine that any dewatering discharges are not contaminated by testing the proposed discharge as described below as part of the application for WM15 authorization. Unless otherwise specified, testing described in this section should be conducted using the methods in 40 CFR 136.

i. Applicants for sites that plan to discharge to Outstanding Resource Waters as identified in 314 CMR 4.06 shall test one sample of the proposed dewatering discharge water for pH, E. Coli (for discharges to freshwater), fecal coliform (for

discharges to salt water), Enterococci (for discharges to salt water), total suspended solids, oil and grease, total nitrogen, total phosphorus, and all parameters with numeric criteria listed in the Massachusetts Surface Water Quality Standards at 314 CMR 4.05(e). Results shall be reported to MassDEP as part of the WM15 application. To determine if the dewatering discharge could be covered under the 2022 CGP, the effluent at zero dilution must meet numeric water quality criteria. If the effluent does not meet numeric water quality criteria, the applicant shall contact EPA Region 1 to discuss coverage under the Remediation General Permit.

ii. Applicants for sites that propose to discharge to Public Water Supplies (314 CMR 4.06(1)(d)1) shall also test one sample of the proposed dewatering discharge water for per- and polyfluoroalkyl substances (PFAS), as outlined in the table below. Results shall be reported to MassDEP as part of the WM15 application. If any PFAS compounds are detected, the applicant shall apply for coverage under the NPDES Remediation General Permit for Massachusetts if required.

PFAS Testing Parameters for Discharges to Public Drinking Water Supplies[99]	
Perfluorohexanesulfonic acid (PFHxS), grab	Report ng/L
Perfluoroheptanoic acid (PFHpA), grab	Report ng/L
Perfluorononanoic acid (PFNA), grab	Report ng/L
Perfluorooctanesulfonic acid (PFOS), grab	Report ng/L
Perfluorooctanoic acid (PFOA), grab	Report ng/L
Perfluorodecanoic acid (PFDA), grab	Report ng/L

iii. Applicants for sites that propose to discharge to an impaired water as identified in the most recent final Massachusetts Integrated List of Waters,shall test one sample of the proposed dewatering discharge water for the parameter(s) for which the waterbody is impaired. To determine if the dewatering discharge could be covered under the 2022 CGP, the effluent at zero dilution must meet numeric water quality criteria. If the effluent does not meet numeric water quality criteria, the applicant shall contact EPA Region 1 to discuss coverage under the Remediation GeneralPermit and shall apply for RGP coverage if required.

iv. For dewatering discharges to all other waters, if any pollutants are knownor believed present in the proposed dewatering discharge water, the applicant shall apply for coverage under the NPDES Remediation General Permit for Massachusetts if required. For the purposes of this condition, a pollutant is "known present" if measured above the analytical detection limit using a sufficiently sensitive test method in an environmental sample, and "believed present" if a pollutant has not been measured in an environmental sample but will be added or generated prior to discharge, such as through a treatment process. Consequently, a pollutant is "known absent" if measured as non-detect relative to the analytical detection limit using a sufficiently sensitive test method in an environmental sample, and "believed absent" if a pollutant has not been measured in an environmentalsample but will not be added or generated prior to discharge and is not a parameter that applies to the applicable activity category for a site. If any pollutants are known or believed present in the

[99] PFAS testing shall follow established EPA methods 537 or 537.1 for drinking water until EPA Method 3512 for non-potable water becomes available.

proposed dewatering discharge water, the applicant shall test one sample of the proposed dewatering discharge water for the pollutants known or believed to be present. To determine if the dewatering discharge could be covered under the 2022 CGP, the effluent at zero dilution must meet numeric water quality criteria. If the effluent does not meet numeric water quality criteria, the applicant shall contact EPA Region 1 to discuss coverage under the Remediation General Permit.

e. Pursuant to 314 CMR 3.11 (2)(a), and in accordance with MassDEP's obligation to protect Outstanding Resource Waters under 314 CMR 4.04(3), applicants that propose to dewater under the 2022 CGP and discharge to Outstanding Resource Waters as identified in 314 CMR 4.06, shall submit the SWPPP and associated documents to MassDEP to review. MassDEP shall complete review within 30 daysof receipt.

f. Pursuant to 314 CMR 3.11 (2)(a)6., and in accordance with MassDEP's obligation under 314 CMR 4.05 to maintain surface waters free from color and turbidity in concentrations or combinations that are aesthetically objectionable or would impair any use assigned to the waterbody, permittees that have been authorized to dewater under the 2022 CGP and that discharge to Outstanding Resource Waters as identified in 314 CMR 4.06 shall carry out daily benchmark monitoring for turbidity[100] for the duration of dewatering. Permittees shall compare the weekly average of the turbidity monitoring results with the established benchmark turbidity value of 25 Nephelometric Turbidity Units (NTU). If a permittee's weekly average turbidity results exceed the benchmark, the operator shall conduct follow-up corrective action to determine the source of the problem and to make any necessary repairs or upgrades to the dewatering controls to lower the turbidity levels. The permittee shall document any corrective action taken in its corrective action log. Furthermore, permittees at these sites shall carry out inspections at higher frequency, specifically, daily inspections of the dewatering discharge treatment for the duration of the discharge. The permittee shall inspect the site for sediment plume or whether a hydrocarbon sheen is visible at the point of discharge, estimate the flow rate at the point of discharge, and inspect the site downstream to assess whether sedimentation is attributable to the dewatering discharges.

g. Pursuant to 314 CMR 3.11 (2)(a)6., and in accordance with MassDEP's obligation under 314 CMR 4.05 to maintain surface waters free from color and turbidity in concentrations or combinations that are aesthetically objectionable or would impair any use assigned to the waterbody, permittees shall store materials outside the Base Flood Elevation[101] when feasible to prevent displacing runoff and erosion.

h. Pursuant to 314 CMR 3.11 (2)(a), and in accordance with MassDEP's obligation to maintain surface waters free from nutrients in concentrations that would cause or contribute to impairment of existing or designated uses under 314 CMR 4.05(5)(c), all applicants who apply for coverage under the 2022 CGP shall follow guidelines on fertilizer application, including use of fertilizer containing no phosphorus, in accordance with 330 CMR 31.00 Plant Nutrient Application Requirements for

[100] Applicants shall follow EPA Method 180.1 to monitor for turbidity

[101] Base Flood Elevation (BFE) is the elevation of surface water resulting from a flood that has a 1% chance of equaling or exceeding that level in any given year. The BFE is shown on the Flood Insurance Rate Map (FIRM) for zones AE, AH, A1–A30, AR, AR/A, AR/AE, AR/A1– A30, AR/AH, AR/AO, V1–V30 and VE. (Source: https://www.fema.gov/node/404233).

Agricultural Land and Non-Agricultural Turf and Lawns. Further, fertilizer shall never be applied to a site when a rain event greater than 0.5 inches is forecast in the next 48 hours.

i. Pursuant to 314 CMR 3.11 (2)(a), all applicants who apply for coverage under the 2022 CGP and elect to carry out site inspections every 14 days shall also inspect sites within 24 hours of 0.25 inches of precipitation events or greater over 24 hours,or within 24 hours of a discharge that occurred due to snowmelt from 3.25 inches or greater of snow accumulation.[102] During the high flow periods in spring (i.e., months of April to June), inspection frequency shall be increased to once per week for all sites.

  i. To determine whether 3.25 inches or greater of snow accumulation has occurred at a site, snowfall measurements can be taken at the site,[103] or theoperator can rely on similar information from a local weather forecast.

j. Implementing structural improvements, enhanced/resilient pollution prevention measures, and other mitigation measures can help to minimize impacts from stormwater discharges from major storm events such as hurricanes, storm surge, extreme/heavy precipitation,[104] and flood events. Pursuant to 314 CMR 3.11 (2)(a), if such stormwater control measures are already in place due to existing requirements mandated by other state, local or federal agencies, the SWPPP shall include a brief description of the controls and a reference to the existing requirement(s). If the site may be exposed to or has previously experienced suchmajor storm events[105], additional stormwater control measures that may be considered, and implemented as necessary, include, but are not limited to:

  i. Reinforce materials storage structures to withstand flooding and additional exertion of force;

  ii. Prevent floating of semi-stationary structures by elevating to the Base Flood Elevation (BFE) level or securing with non-corrosive device;

  iii. When a delivery of exposed materials is expected, and a storm is anticipated within 48 hours, delay delivery until after the storm or storematerials as appropriate (refer to emergency procedures);

[102] This is the amount of snow that is equivalent to 0.25 inches of rain, based on information from the National Oceanic and Atmospheric Administration (NOAA) indicating that 13 inches of snow is, on average, equivalent to 1 inch of rain. See https://www.nssl.noaa.gov/education/svrwx101/winter/faq/.

[103] NOAA's National Weather Service has guidelines on snowfall measurements at https://www.weather.gov/jkl/snow_measurement. These guidelines recommend use of a "snowboard" (a piece of wood about 16 inches by 16 inches) that is placed in an unobstructed part of the site on a hard surface.

[104] Heavy precipitation refers to instances during which the amount of rain or snow experienced in a location substantially exceeds what is normal. What constitutes a period of heavy precipitation varies according to location and season. Heavy precipitation does not necessarily mean the total amount of precipitation at a location has increased— just that precipitation is occurring in more intense or more frequent events.

[105] To determine if your facility is susceptible to an increased frequency of major storm events that could impact the discharge of pollutants in stormwater, you may reference FEMA, NOAA, or USGS flood map products at https://www.usgs.gov/faqs/where-can-i-find-flood-maps?qt-news_science_products=0#qtnews_science_products.

iv. Temporarily store materials and waste above the Base Flood Elevation ***[EPA notes that it has deleted a footnote reference to the term "Base Flood Elevation" since the same footnote is already included in Part 9.1.2.g, above.]*** level;

v. Temporarily reduce or eliminate outdoor storage;

vi. Temporarily relocate any mobile vehicles and equipment to higher ground;

vii. Develop scenario-based emergency procedures for major storms that are complementary to regular stormwater pollution prevention planning andidentify emergency contacts for staff and contractors; and

viii. Conduct staff training for implementing your emergency procedures atregular intervals.

k. Pursuant to 314 CMR 3.11 (2)(a)6., and in accordance with MassDEP's obligation under 314 CMR 4.05(5)(e) to maintain surface waters free from pollutants in concentrations or combinations that are toxic to humans, aquatic life, or wildlife, permittees who seek coverage under the 2022 CGP and anticipate to carry out dust control shall limit their dust control methodology to using water only and specifically avoid using other techniques, such as solutions containing calcium chloride.

l. If MassDEP requests a copy of the Stormwater Pollution Prevention Plan (SWPPP) for any construction site at any time, the permittee shall submit the SWPPP to MassDEP within 14 days of such a request. MassDEP may conduct an inspection of any site covered by this permit to ensure compliance with state lawrequirements, including state water quality standards.

9.1.3 MTR10F000 Areas in the State of Vermont located at a federal facility

a. Earth disturbance at any one time is limited to five acres.

b. All areas of earth disturbance must have temporary or final stabilization within 14 days of the initial disturbance. After this time, disturbed areas must be temporarily or permanently stabilized in advance of any runoff producing event. A runoff producing event is an event that produces runoff from the construction site. Temporary stabilization is not required if precipitation is not forecast and work is to continue in the next 24-hours or if the work is occurring in a self-contained excavation (i.e. no outlet) with a depth of two feet or greater (e.g. house foundation excavation, utility trenches). Areas of a construction site that drain to sediment basins are not considered eligible for this exemption, and the exemption applies only to the excavated area itself.

c. Site inspections on active construction sites shall be conducted daily during the period from October 15 through April 15.

d. The use of chemical treatments (e.g. polymers, flocculants, and coagulants) for the settling and/or removal of sediment from stormwater runoff associated with construction and construction-related activities requires prior written approval and an approved site and project-specific plan, from the Vermont Agency of Natural Resources. In addition, the use of cationic polymers is prohibited unless approved by the Vermont Agency of Natural Resources under a site and project-specific plan.

e. Any applicant under EPA's CGP shall allow authorized Vermont Agency of Natural Resources representatives, at reasonable times and upon presentation of credentials, to enter upon the project site for purposes of inspecting the project and determining

compliance with this Certification.

f. The Vermont Agency of Natural Resources may reopen and alter or amend the conditions of this Certification over the life of the EPA 2022 Construction General Permit when such action is necessary to assure compliance with the VWQS.

9.2 EPA REGION 2

9.2.1 NYR10I000 Indian country within the State of New York

a. Saint Regis Mohawk Tribe

i. Any Responsible-Person/Decision-Maker required under the CGP to submit a Notice of Intent (NOI) to EPA for coverage under the CGP, must concurrently submit an electronic copy of the NOI to the SRMT Environmental Division, Water Resource Program Manager. Additionally, an electronic copy of the Notice of Termination (NOT) must be provided within three business days after electronic confirmation is received from EPA that the NOT has been accepted. The NOI and NOT must be electronically provided to the following addresses:

Mr. Tieman W. Smith
Water Resources Program Manager Saint Regis Mohawk Tribe
449 Frogtown Road
Akwesasne, NY 13655 Tiernan.Smith@srmt-nsn.gov 518.358.2272 ext. 5073

ii. Any Responsible-Person/Decision-Maker that is required as part of the CGP to prepare a Discharge Management Plan (OMP) or Storm Water Management Plan (SWMP) and/or Storm Water Pollution Prevention Plan (SWPPP) must submit an electronic copy of the DMP, SWMP and/or SWPPP to the SRMT Environment Division, Water Resources Program Manager IO business days prior to the start of construction of any work to be conducted under the CGP. The applicable documents must be provided to the electronic address listed above.

iii. Any Responsible-Person/Decision-Maker that is required under the CGP to submit an annual report to EPA must submit an electronic copy of the annual report concurrently to the SRMT Water Resource Program. Additionally, any correspondences between the applicant and EPA related to analytical data, written reports, corrective action, enforcement, monitoring, or an adverse incident must likewise be routed to the SRMT Water Resources Program at the above electronic address.

iv. An "Authorization to Proceed Letter" with site-specific mitigation requirements may be sent out to the permittee when a review of the NOI and OMP, SWMP and /or SWPPP on a case-by-case basis, is completed by the SRMT Environment Division, Water Resource Program. This approval will allow the application to proceed if all mitigation requirements are met.

b. Seneca Nation

i. Under Part 1.1.5 of the CGP, the Seneca Nation requests that an applicant must demonstrate that they meet the eligibility criteria listed in Appendix D (certify in your Notice of Intent (NOI) that you meet one of the eligibility criteria [Criterion A-F]) as well as species and critical habitats that are listed under the Seneca Nation's "Fishing and Conservation Laws" and the "Seneca Nation of Indians Comprehensive Conservation Law".

ii. The Tribal Historic Preservation Office (THPO) was established in 2000 after the Seneca Nation received a recognition letter from the National Park Service (NPS); therefore under Part 1.1.6 of the CGP (Appendix E) and prior to submitting a Notice of Intent (NOI) operators must complete the Nation's TPHO, Project Review Form (https://sni.org/media/246603/sni-thpo-project-review-form.pdf) and submit the completed form with associated information to the Tribal Historic Preservation Officer at 90 Ohi:yo' Way, Salamanca, NY 14779. Federal agencies engaging in construction activities must provide for construction review by a certified construction reviewer in accordance with 7 Del. C. §§4010 & 4013 and 7 DE Admin. Code 5101, subsection 6.1.6.

iii. Under Part 1.2 of the CGP, discharges must also follow the Section 13 of the Guide for Construction (Seneca Nation of Indians Source Water Code) and respectively, Council Resolution, dated April 13, 2013 (CN: R-04-13-13-11) to ensure that the health, safety and welfare of the citizens of the Seneca Nation, and all other within the Lands and Territories of the Seneca Nation of Indians, and to facilitate the adequate provisions of water through the elimination or prevention of ground water contamination in the vicinity of wells that supply drinking water for the Nation. The area is known as the Source Water Protection Area (SWPA) and specified activities are regulated within this SWPA, as cited in Section 13 of the Guide for Construction and Section VI, of CN: R-04-13-13-11.

iv. Under Part 1.4, any operator who seeks coverage of the CGP, and is required to submit a notice of intent NOI and Notice of Termination (NOT) (as necessary) to the EPA for coverage, under Part 1.4.2 must also submit a copy of the NOI to the Seneca Nation's Environmental Protection Department (EPD) within three business days of submittal to the EPA, (address shown below). Respectively, a copy of the NOT (as described under Part 8.3 of the CGP), which certifies that you have met the requirements of Part 8, must be provided within three business days after electronic confirmation is received from the EPA that the NOT has been accepted. In addition to a NOI and NOT, the Seneca Nation (Environmental Protection Department [EPD]) would require an Environmental Impact Assessment (EA) (Long Form), as shown in Section 2 of the Seneca Nation of Indians Laws, Ordinances & Policies (Guide for Construction), to be completed and submitted to the EPD prior to any project to determine whether the impacts from a project would create significant and detrimental effects to the Nation's lands, water (violate WQS), and environment. The NOI, NOT, and EA must be submitted electronically to epd@sni.org and provided to the following address:

Seneca Nation
Environmental Protection Department (EPD) Attn: Director of EPD
12837 Route 438
Irving, NY 14081

v. Under Part 3.0 of the CGP, discharges must be controlled as necessary to meet applicable WQS. The Seneca Nation is working actively towards finalizing and implementing the; therefore, the EPD would require an applicant to submit or grant access to the permit to obtain information on the impact of effluents on receiving waters, including the capability of receiving waters to support future designated uses and achieve the WQS of the Nation; and to advise prospective dischargers of discharge requirements, and coordinate with the appropriate

permitting agencies. As stated in the Decision Document, under Section 303(c) of the CWA, 33 U.S.C. § 1313(c), states develop, review, and revise (as appropriate) water quality standards for surface waters of the United States. At a minimum, such standards are to include designated water uses, water quality criteria to protect such uses, and an antidegradation policy. 40 C.F.R. § 131.6. In addition, under Section 401 of the CWA states may grant, condition, or deny "certification" for federally permitted or licensed activities that may result in a discharge to the waters of the United States 33 U.S.C. § 1341.

vi. Under Part 7.2.8(a)(b)(c) and for Part 9 of the CGP, the following Sections of the Seneca Nation's Guide for Construction shall be considered, in conjunction with the CGP:

(a) Section 1. Executive Order - To Establish a Policy for Governing Access to Nation Territories and Facilities by Officials of Foreign Government, dated March 31, 2011

(b) Section 3. Natural Resources Committee, Sand and Gravel Law (CN: R-06-24-05-08)

(c) Section 4. Fishing and Conservation Laws - Part 1.1.5 of the CGP

(d) Section 5. Seneca Nation of Indians Comprehensive Conservation Law, adopted January 14, 2012

(e) Section 9. Food is Our Medicine (FIOM) Program/Native Planting Policy (CN: R-03- 08-14-14)

(f) Section 10. Forestry Management Plan (CN: R-08-14-10-23)

(g) Section 11. Timber Ordinance #411-092, dated May 8, 1982

(h) Section 14. Flood Damage Prevention Local Law, dated September 27, 1988

(i) Section 16. Utilities Ordinance No. 87-100

(j) Authorizing Emergency Action and Contingency Plan to Restrain Pollution of Nations Waters, (Council Resolution: R-03-01-18-10), dated March 10, 2018 Seneca Nation of Indians Permit Application for Construction within Waterways Permit, Form NR98-01.00

9.3 EPA REGION 3

9.3.1 DCR100000 District of Columbia

a. Discharges authorized by this permit shall comply with the District of Columbia Water Pollution Control Act of 1984, as amended (DC Official Code § 8-103.01 and § 8-103.06, et seq.) to ensure that District of Columbia waters, waters in adjacent and downstream states, and the beneficial uses of these waters will not be harmed or degraded by the discharges.

b. Discharges authorized by this permit must comply with §§ 1104.1 and 1104.8 of Chapter 11 and the provisions of Chapter 19 of Title 21of District of Columbia Municipal Regulations in order to attain and maintain designated uses of the District of Columbia waters.

c. The permittee shall comply with the District of Columbia Stormwater Management and Soil Erosion and Sediment Control regulations in Chapter 5 of Title 21 of the District of Columbia Municipal Regulations.

d. The permittee shall comply with the District of Columbia Flood Management Control regulations in Chapter 31 of Title 20 of the District of Columbia Municipal Regulations.

e. The permittee shall submit a copy of the Stormwater Pollution Prevention Plan (SWPPP) to the Regulatory Review Division, Department of Energy & Environment, Government of the District of Columbia, 1200 First Street, NE, 5th Floor, Washington, DC 20002, during the review and approval of the permittee's DOEE Erosion and Sediment Control Plan in accordance with the provisions of Chapter 542 of Title 21 of the District of Columbia Municipal Regulations.

f. Upon request, the permittee shall submit all inspection and monitoring reports as required by this permit and 40 CFR § 122.41 to the Associate Director, Inspection and Enforcement Division, Department of Energy & Environment, Government of the District of Columbia, 1200 First Street, NE, 5th Floor, Washington, DC 20002; telephone (202) 535-2226, or by email at Joshua.Rodriguez@dc.gov.

g. In the event the permittee intends to discharge dewatering water, groundwater, or groundwater comingled with stormwater from a known contaminated site, the permittee shall contact the Regulatory Review Division, Department of Energy & Environment, Government of the District of Columbia, 1200 First Street, NE, 5th Floor, Washington, DC 20002; telephone (202) 535-2600, or by email at MS4DischargeAuthorization@dc.gov to request authorization to discharge dewatering water, groundwater, or groundwater comingled with stormwater to the District's Municipal Separate Storm Sewer System (MS4) or to a surface water body pursuant to §§ 8-103.02, 8-103.06, and 8-103.07 of the District of Columbia Water Pollution Control Act of 1984, as amended.

9.3.2 DER10F000 Areas in the State of Delaware located at a federal facility (as defined in Appendix A)

a. Federal agencies must submit a sediment and stormwater management plan (SSMP) and receive Department approval prior to undertaking any land clearing, soil movement or construction activity unless conducting an exempt activity.

b. Federal construction activities are required to have a third-party Certified Construction Reviewer (CCR) perform weekly reviews to ensure the adequacy of construction activities pursuant to the approved SSMP and regulations.

Implementation of approved SSMPs requires the daily oversight of construction activity by certified responsible personnel.

c. Implementation of approved SSMPs requires the daily oversight of construction activity by certified responsible personnel.

d. A current copy of the SSMP must be maintained at the construction site.

e. Unless authorized by the Department, not more than 20 acres may be disturbed at any one time.

9.4 EPA REGION 4

No additional conditions

9.5 EPA REGION 5

9.5.1 MIR10I000 Indian country within the State of Minnesota

a. Fond du Lac Reservation

i. New dischargers wishing to discharge to an Outstanding Reservation Resource Water (ORRW)[106] must obtain an individual permit from EPA for storm water discharges from large and small construction activities.

ii. A copy of the Storm Water Pollution Prevention Plan (SWPPP) must be submitted to the Office of Water Protection at least fifteen (15) days in advance of sending the Notice of Intent to EPA. The SWPPP can be submitted electronically to richardgitar@FDLREZ.com or by hardcopy sent to:

Fond du Lac Reservation
Office of Water Protection
1720 Big Lake Road
Cloquet, MN 55720

iii. Copies of the Notice of Intent (NOI) and the Notice of Termination (NOT) must be sent to the Fond du Lac Office of Water Protection at the same time they are submitted to EPA. [The condition helps the Office of Water Protection keep track of when a project is about to start and when it has ended. FDL Water Quality Certification Ordinance, Section 204 (a) (2)).

iv. If the project will entail a discharge to any watercourse or open water body, the turbidity limit shall NOT exceed 10% of natural background within the receiving water(s) as determined by Office of Water Protection staff. For such discharges, turbidity sampling must take place within 24 hours of a ½-inch or greater rainfall event. The results of the sampling must be reported to the Office of Water Protection within 7 days of the sample collection. All sample reporting must include the date and time, location (GPS: UTM/Zone 15), and NTU. CGP applicants are encouraged to work with the Office of Water Protection in determining the most appropriate location(s) for sampling. [This condition helps both the Office of Water Protection and the project proponent in knowing whether or not their erosion control efforts are effective. FDL Water Quality Certification, Section 204 (b) (1)).

v. Receiving waters with open water must be sampled for turbidity prior to any authorized discharge as determined by Office of Water Protection staff. This requirement only applies to receiving waters which no ambient turbidity data exists. [This condition allows the Office of Water Protection to obtain a baseline turbidity sample in which to compare to other samples. FDL Water Quality Certification Ordinance, Section 204 (b) (2)].

vi. All work shall be carried out in such a manner as will prevent violations of water quality criteria as stated in the Water Quality Standards of the Fond du Lac Reservation, Ordinance #12/98, as amended. This includes, but is not limited to, the prevention of any discharge that causes a condition in which visible solids, bottom deposits, or turbidity impairs the usefulness of water of the Fond du Lac

[106] Although additional waters may be designated in the future, currently Perch Lake, Rice Portage Lake, Miller Lake, Deadfish Lake, and Jaskari Lake are designated as ORRWs.

Reservation for any of the uses designated in the Water Quality Standards of the Fond du Lac Reservation. These uses include wildlife, aquatic life, warm water fisheries, cold water fisheries, subsistence fishing (netting), primary contact recreation, secondary contact recreation, cultural, wild rice areas, aesthetic waters, agriculture, navigation, commercial and wetlands. It also includes the designated uses of wetlands including, but not limited to, baseflow discharge, cultural opportunities, flood flow attenuation, groundwater recharge, indigenous floral and fauna) diversity and abundance, nutrient cycling, organic carbon export/cycling, protection of downstream water quality, recreation, resilience against climactic effects, sediment/shoreline stabilization, surface water storage, wild rice, and water dependent wildlife. [In addition to listing the designated uses of waters of the Fond du Lac Reservation, this condition also limits the project proponent to discharges that will not violate our Water Quality Standards. FDL Water Quality Certification Ordinance, Section 204 (a) (7)).

vii. Appropriate steps shall be taken to ensure that petroleum products or other chemical pollutants are prevented from entering waters of the Fond du Lac Reservation. All spills must be reported to the appropriate emergency management Agency (National Response Center AND the State Duty Officer), and measures shall be taken immediately to prevent the pollution of waters of the Fond du Lac Reservation, including groundwater. The Fond du Lac Office of Water Protection must also be notified immediately of any spill regardless of size. [This condition helps protect water quality and also reminds project proponents of their responsibility in reporting spill events. FDL Water Quality Certification Ordinance, Section 204 (b) (3)).

viii. All seed mixes, whether used for temporary stabilization or permanent seeding, shall NOT contain any annual ryegrass (Lolium species). Wild rye (Elymus species) or Oats (Avena species) may be used as a replacement in seed mixes. [This condition prevents the use of annual ryegrass on the Reservation. Annual ryegrass is allelopathic, which means it produces biochemical in its roots that inhibit the growth of native plants. If used in seed mixes, annual ryegrass could contribute to erosion, especially on slopes. However, the condition also specifies substitute grasses that germinate almost as fast as annual ryegrass for use as a cover crop to help prevent erosion. FDL Water Quality Certification Ordinance, Section 204 (t) (1)).

ix. To prevent the introduction of invasive species, ALL contractors and subcontractors MUST disclose information stating prior equipment location(s) and ALL known invasive species potentially being transported from said location(s). All equipment MUST undergo a high pressure wash (including any equipment mats) BEFORE ENTERING the Fond du Lac Reservation. Personal equipment such as work boots, gloves, vest, etc. MUST be clean of debris, dirt and plant and animal material BEFORE ENTERING the Fond du Lac Reservation. Equipment being transported from known infested areas MUST undergo a high pressure wash as soon as possible after leaving the infested site and again BEFORE ENTERING the Fond du Lac Reservation, to avoid transport of invasive species into areas surrounding the Reservation. Written certification of equipment cleaning MUST be provided to the Fond du Lac Office of Water Protection. Upon arrival, ALL contractor and subcontractor equipment will be inspected by appointed Fond du Lac staff. If equipment is deemed unsatisfactory, the equipment MUST

undergo a high pressure washing until the equipment is cleared by the inspector, until such time, minimal travel will be allowed through the Reservation. The contractor shall be held responsible for the control of any invasive species introduced as a result of their project. [This condition requires the project proponent to prevent the inadvertent introduction of invasive species by taking an active role in cleaning all vehicles, equipment, and equipment mats before entering the Reservation. This condition has been placed in certifications since 2012, due to the introduction of Wild Parsnip in 2011 from a pipeline contractor. It is much easier to prevent the introduction of an invasive species than it is to eradicate it once it has been introduced. Many invasive plant species form monocultures, preventing native plants from growing. This situation often leads to cases of erosion, which in turn effects water quality. FOL Water Quality Certification Ordinance, Section 204 (g) (1)].

x. A copy of this certification MUST be kept by the contractor on-site at all times and be available for viewing by all personnel, including inspectors. [This condition ensures that the information contained in the certification, especially the conditions, is readily available onsite for reference. FOL Water Quality Certification Ordinance, Section 204 (a) (9)].

b. The Grand Portage Band of Lake Superior Chippewa

i. The CGP authorization is for construction activities that may occur within the exterior boundaries of the Grand Portage Reservation in accordance to the Grand Portage Land Use Ordinance. The CGP regulates stormwater discharges associated with construction sites of one acre or more in size. Only those activities specifically authorized by the CGP are authorized by this certification (the "Certification").

ii. All construction stormwater discharges authorized by the CGP must comply with the Water Quality Standards and Water Resources Ordinance, as well as Applicable Federal Standards (as defined in the Water Resources Ordinance).

iii. All appropriate steps must be taken to ensure that petroleum products or other chemical pollutants are prevented from entering the Waters of the Reservation. All spills must be reported to the appropriate emergency-management agency, and measures must be taken to prevent the pollution of the Waters of the Reservation, including groundwater.

iv. The 2022 CGP requires inspections and monitoring reports of the construction site stormwater discharges by a qualified person. Monitoring and inspection reports must comply with the minimum requirements contained in the 2022 CGP. The monitoring plan must be prepared and incorporated into the Storm Water Pollution Prevention Plan (the "SWPP"). A copy of the SWPP must be submitted to the Board at least 30 days in advance of sending the requisite Notice of Intent to EPA. The SWPP should be sent to:

Grand Portage Environmental Resources Board

P.O. Box 428

Grand Portage, MN 55605

Copies of the Notice of Intent and Notice of Termination required under the General Permit must be submitted to the Board at the address above at the same time they are submitted to the EPA.

v. If requested by the Grand Portage Environmental Department, the permittee must provide additional information necessary for a case-by-case eligibility determination to assure compliance with the Water Quality Standards and any Applicable Federal Standards. The burden is on the applicant to demonstrate compliance with the Water Quality Standards, the Water Resources Ordinance, and Applicable Federal Standards whether or not the application is ultimately eligible for the CGP.

vi. CGP discharges must not cause nuisance conditions as defined in Grand Portage Water Quality Standards.

vii. The Board retains full authority to ensure compliance with and to enforce the provisions of the Water Resource Ordinance and Water Quality Standards, Applicable Federal Standards, and these Certification conditions. Nothing herein affects the scope or applicability of other controlling tribal or federal requirements, including but not limited to impacts to cultural, historical, or archeological features or sites, or properties that may be eligible for listing on the National Register of Historic Places under the National Historic Preservation Act, 54 U.S.C. §§ 300101 et seq.

viii. Appeals related to Board actions taken in accordance with any of the preceding conditions may be heard by the Grand Portage Tribal Court.

c. Leech Lake Band of Ojibwe

i. The water quality standards that apply to the construction site are the standards at the time the operator submits its Notice of Intent (NOI) to EPA and the LLBO WRP (see conditions # 2 and # 3).

ii. A copy of the Stormwater Pollution Prevention Plan (SWPPP) must be submitted to the LLBO WRP at least 30 days in advance of sending the NOI for the project to EPA. See attached LLBO 401 Water Quality Certification Ordinance. Section 304(a)(1). The SWPPP should be submitted electronically to Jeff.Harper@llojibwe.net and by hardcopy sent to:

Leech Lake Band of Ojibwe
ATTN: Water Resources Program - 401 Cert
Division of Resource Management
190 Sailstar Drive NW
Cass Lake, Minnesota 56633

iii. Copies of the NOI and the Notice of Termination (NOT) must be submitted to the LLBO WRP at the same time they are submitted to EPA. See attached LLBO 401 Water Quality Certification Ordinance, Section 304(a)(2). The NOI and NOT should be submitted electronically to Jeff.Harper@llojibwe.net and sent by hardcopy to the address cited in condition # 2.

iv. Any and all other conditions listed in Section 304 of the attached LLBO 401 Water Quality Certification Ordinance shall be observed unless the LLBO WRP deems that certain conditions therein are not applicable to the project in need of a permit under this certification.

v. A copy of this certification MUST be kept by the contractor on-site at all times and be available for viewing by all personnel, including inspectors.

vi. Upon consideration of the NOI, if the LLBO WRP finds that the discharge will not be controlled as necessary to meet applicable water quality standards, the LLBO WRP may insist, consistent with Part 3.1 of the CGP, that additional controls are installed to meet applicable water quality standards, or recommend to EPA that the operator obtain coverage under an individual permit.

9.5.2 WIR10I000 Indian country within the State of Wisconsin

a. Bad River Band of Lake Superior Tribe of Chippewa Indians

i. Only those activities specifically authorized by the CGP are authorized by this Certification. This Certification does not authorize impacts to cultural properties, orhistorical sites, or properties that may be eligible for listing as such.

ii. All projects which are eligible for coverage under the CGP and are located within the exterior boundaries of the Bad River Reservation shall be implemented in such a manner that is consistent with the Tribe's Water Quality Standards (WQS). The Tribe's WQS can be viewed at: http://www.badriver-nsn.gov/wp-content/uploads/2020/01/NRD_WaterQualityStandards_2011.pdf

iii. Operators are not eligible to obtain authorization under the CGP for all new discharges to an Outstanding Tribal Resource Water (OTRW or Tier 3 water). OTRWs, or Tier 3 waters, include the following: Kakagon Slough and the lower wetland reaches of its tributaries that support wild rice, Kakagon River, Bad River Slough, Honest John Lake, Bog Lake, a portion of Bad River, from where it enters the Reservation through the confluence with the White River, and Potato River. OTRWs can be viewed at: https://www.arcgis.com/apps/View/index.html?appid=6f44c371217e4ee8b5f1c2c705c 7c7c5

iv. An operator proposing to discharge to an Outstanding Resource Water (ORW or Tier 2.5 water) under the CGP must comply with the antidegradation provisions of the Tribe's WQS. ORWs, or Tier 2.5 waters, include the following: a portion of Bad River, from downstream the confluence with the White River to Lake Superior, White River, Marengo River, Graveyard Creek, Bear Trap Creek, Wood Creek, Brunsweiler River, Tyler Forks, Bell Creek, and Vaughn Creek. ORWs can be viewed at: https://www.arcgis.com/apps/View/index.html?appid=6f44c371217e4ee8b5f1c2c705c 7c7c5. The antidegradation demonstration materials described in provision E.4.iii., and included on the antidegradation demonstration template found at: https://www.badriver-nsn.gov/natural-resources/projectreviews/, must be submitted to the following address:

Bad River Tribe's Natural Resources Department
Attn: Water Regulatory Specialist
P.O. Box 39 Odanah, WI 54861
WaterReg@badriver-nsn.gov

v. An operator proposing to discharge to an Exceptional Resource Water (ERW or Tier 2 water) under the CGP must comply with the antidegradation provisions of the Tribe's WQS. ERWs, or Tier 2 waters, include the following: any surface water within the exterior boundaries of the Reservation that is not specifically classified as an Outstanding Resource Water (Tier 2.5 water) or an Outstanding Tribal Resource Water (Tier 3 water). ERWs can be viewed at:

https://www.arcgis.com/apps/View/index.html?appid=6f44c371217e4ee8b5f1c2c705c 7c7c5. The antidegradation demonstration materials described in provision E.4.ii., and included on the antidegradation demonstration template found at: https://www.badriver-nsn.gov/natural-resources/projectreviews/, must be submitted to the following address:

Bad River Tribe's Natural Resources Department
Attn: Water Regulatory Specialist
P.O. Box 39 Odanah, WI 54861
WaterReg@badriver-nsn.gov

vi. Projects utilizing cationic treatment chemicals within the Bad River Reservation boundaries are not eligible for coverage under the CGP.

vii. A discharge to a surface water within the Bad River Reservation boundaries shall not cause or contribute to an exceedance of the turbidity criterion included in the Tribe's WQS, which states: Turbidity shall not exceed 5 NTU over natural background turbidity when the background turbidity is 50 NTU or less, or turbidity shall not increase more than 10% when the background turbidity is more than 50 NTU.

viii. All projects which are eligible for coverage under the CGP within the exterior boundaries of the Bad River Reservation must comply with the Bad River Reservation Wetland and Watercourse Protection Ordinance, or Chapter 323 of the Bad River Tribal Ordinances, including the erosion and sedimentation control, natural buffer, and stabilization requirements. Questions regarding Chapter 323 and requests for permit applications can be directed to the Wetlands Specialist in the Tribe's Natural Resources Department at (715) 682-7123 or wetlands@badriver-nsn.gov.

ix. An operator of a project, which is eligible for coverage under the CGP, that would result in an allowable discharge under the CGP occurring within the exterior boundaries of the Bad River Reservation must notify the Tribe prior to the commencing earth-disturbing activities. The operator must submit a copy of the Notice of Intent (NOI) to the following addresses at the same time it is submitted to the U.S. EPA:

Bad River Tribe's Natural Resources Department
Attn: Water Regulatory Specialist
P.O. Box 39 Odanah, WI 54861
WaterReg@badriver-nsn.gov

Bad River Tribe's Natural Resources Department
Attn: Tribal Historic Preservation Officer (THPO)
P.O. Box 39 Odanah, WI 54861
THPO@badriver-nsn.gov

The operator must also submit a copy of the Notice of Termination (NOT) to the above addresses at the same time it is submitted to the U.S. EPA. Photographs showing the current site conditions must be included as part of the NOT to document the stabilization requirements have been met.

x. The THPO must be provided 30 days to comment on the project.

xi. The operator must obtain THPO concurrence in writing. This written concurrence will outline measures to be taken to prevent or mitigate effects to historic properties. For more information regarding the specifics of the cultural resources process, see 36 CFR Part 800. A best practice for an operator is to consult with the THPO during the planning stages of an undertaking.

xii. An operator of a project, which is eligible for coverage under the CGP, that would result in an allowable discharge under the CGP occurring within the exterior boundaries of the Bad River Reservation must submit a copy of the Stormwater Pollution Prevention Plan (SWPPP) to the following address at the same time as submitting the NOI:

Bad River Tribe's Natural Resources Department
Attn: Water Regulatory Specialist
P.O. Box 39 Odanah, WI 54861
WaterReg@badriver-nsn.gov

xiii. Any corrective action reports that are required under the CGP must be submitted to the following address within one (1) working day of the report completion:

Bad River Tribe's Natural Resources Department
P.O. Box 39 Odanah, WI 54861
WaterReg@badriver-nsn.gov

xiv. An operator of a project, which is eligible for coverage under the CGP, that would result in an allowable discharge under the CGP occurring within the exterior boundaries of the Bad River Reservation must submit a copies of the inspection reports (including photographs) to the following address within 24 hours of completing any site inspection required:

Bad River Tribe's Natural Resources Department Attn: Water Regulatory Specialist
P.O. Box 39 Odanah, WI 54861
WaterReg@badriver-nsn.gov

xv. An operator shall be responsible for meeting any additional permit requirements imposed by the U.S. EPA necessary to comply with the Tribe's antidegradation policies if the discharge point is located upstream of waters designated by the Tribe.

9.6 EPA REGION 6

9.6.1 NMR100000 State of New Mexico, except Indian country

a. In Outstanding National Resource Waters (ONRWs) in New Mexico, no degradation is permitted except in limited, specifically defined instances. Therefore, Operators are not eligible to obtain authorization under this general permit for stormwater discharges to waters classified as ONRWs listed in Paragraph D of 20.6.4.9 New Mexico Administrative Code (NMAC), also referred to as "Tier 3 waters" as defined in Appendix A of this permit. Exception: When construction activities are in response to a public emergency (e.g., wildfire, extreme flooding, etc.) and the related work requires immediate authorization to avoid a threat to public health or safety.

i. Operators who conduct construction activities in response to a public emergency to mitigate an immediate threat to public health or safety shall

adhere to the requirements in 20.6.4.8(A)(3)(c) NMAC, including notifying the New Mexico Environment Department (NMED) within seven days of initiation of the emergency action and providing NMED with a summary of the action taken within 30 days of initiation of the emergency action.

ii. For all other scenarios, Operators with proposed discharges to ONRWs in New Mexico shall obtain coverage from EPA under an NPDES Individual Permit and will comply with the additional standards and regulations related to discharges to ONRWs in 20.6.4.8(A) NMAC. Additional information is available from:

New Mexico Environment Department Surface Water Quality Bureau
P.O. Box 5469
Santa Fe, NM 87502-5469 Telephone: 505-827-0187
https://www.env.nm.gov/surface-water-quality/wqs/
https://gis.web.env.nm.gov/oem/?map=swqb

b. If construction dewatering activities are anticipated at a construction site and non-stormwater discharges of groundwater, subsurface water, spring water, and/or other dewatering water are anticipated, the Operators/Permittees must complete the following steps:

1. Review the state's Ground Water Quality Bureau Mapper (https://gis.web.env.nm.gov/GWQB/) and Petroleum Storage Tank Bureau Mapper (https://gis.web.env.nm.gov/GWQB/).

   Check if the following sources are located within the noted distance from the anticipated construction dewatering activity. At a minimum, a list of the following potential sources of contaminants and pollutants at the noted distance is to be kept in the SWPPP.

Source of Potential Contamination or Pollutants*	Constituents likely to be required for testing*
Within 0.5 mile of an open Leaking Underground Storage Tank (LUST) site	BTEX (Benzene, Toluene, Ethylbenzene, and Xylene) plus additional parameters depending on site conditions**
Within 0.5 mile of an open Voluntary Remediation site	All applicable parameters or pollutants listed in 20.6.4.13, 20.6.4.52, 20.6.4.54, 20.6.4.97 thru 20.6.4.99, 20.6.4.101 through 20.6.4.899, and 20.6.4.900 NMAC (or an alternate list approved by the NMED-SWQB)*
Within 0.5 mile of an open RCRA Corrective Action Site	
Within 0.5 mile of an open Abatement Site	
Within 0.5 mile of an open Brownfield Site	
Within 1.0 mile or more of a Superfund site or National Priorities List (NPL) site with associated groundwater contamination.	
Construction activity contaminants and/or natural water pollutants	Additional parameters depending on site activities and conditions (Contact NMED- SWQB for an alternate list)*

*For further assistance determining whether dewatering may encounter contaminated sources, please contact the NMED Ground Water Quality Bureau at 505-827-2965 or NMED Surface Water Quality Bureau (SWQB) at 505-827-0187.

** EPA approved sufficiently sensitive methods must be used. For known PCB sources and analysis, EPA Method 1668C must be used (see https://www.epa.gov/cwa-methods).

2. If dewatering activities are anticipated, information on the flow rate and potential to encounter contaminated groundwater, subsurface water, spring water, or dewatering water must be provideddirectly to NMED at the following address:

   NMED Surface Water Quality Bureau

   Program Manager, Point Source Regulation
   SectionPO Box 5469, Santa Fe, NM 87502

   Please call the SWQB to obtain the appropriate email address (505-827-0187).

3. In addition, the Operator/Permittee must characterize the quality of the groundwater and subsurface water, spring water, or dewatering water being considered for discharge according to the table above and including dissolved hardness and pH. Considering the contaminant sources listed in the table above, water quality data may already be available. For further assistance, contactthe

NMED Surface Water Quality Bureau (505-827-0187), Ground Water Quality Bureau (505-827- 2965), Petroleum Storage Tank Bureau (505-476-4397), or Hazardous Waste Bureau (505-476- 6000).

i. The Operator/Permittee must submit recent analytical test results (i.e., within the past 5 years) according to the table above, and including dissolved hardness and pH, to the EPA Region 6 Stormwater Permit Contact and the NMED Surface Water Quality Bureau (see contact information in #2 above). If the test data exceed applicable water quality standards, then the groundwater, subsurface water, spring water, or dewatering water cannot be discharged into surface waters under this general permit. Operators/Permittees may submit an NPDES Individual Permit application to treat and discharge to waters of the U.S. or find alternative disposal measures. No discharges to surface waters are allowed until authorized.

ii. If the discharge has the potential to affect groundwater (e.g., land application), the Operator/Permittee must submit an NOI to the NMED Ground Water Quality Bureau (see 20.6.2.1201 NMAC – Notice of Intent to Discharge).

4. The Operator/Permittee must document any findings and all correspondence with NMED and EPA in the SWPPP.

c. Operators who intend to obtain authorization under this permit for new and existing storm water dischargesfrom construction sites must satisfy the following condition:

i. The SWPPP must include site-specific interim and permanent stabilization, managerial, and structural solids, erosion and sediment control best management practices (BMPs) and/or other controls that are designed to prevent to the maximum extent practicable an increase in the sediment yield and flow velocity from pre-construction, pre-development conditions to assure thatapplicable standards in 20.6.4 NMAC, including the antidegradation policy, and TMDL waste load allocations (WLAs) are met. This requirement applies to discharges both during construction and after construction operations have been completed. The SWPPP must identify and document the rationale for selecting these BMPs and/or other controls. The SWPPP must also describe design specifications, construction specifications, maintenance schedules (including a long-term maintenance plan), criteria for inspections, and expected performance and longevity of these BMPs.For sites greater than 5 acres in size, BMP selection must be made based on the use of appropriatesoil loss prediction models (i.e. SEDCAD, RUSLE, SEDIMOT, MULTISED, etc.) OR equivalent generallyaccepted (by professional erosion control specialists) soil loss prediction tools.

ii. For all sites, the Operator(s) must demonstrate, and include documentation in the SWPPP, that implementation of the site-specific practices will ensure that the applicable standards and TMDL WLAs are met, and will result in sediment yields and flow velocities that, to the maximum extent practicable, will not be greater than the sediment yield levels and flow velocities from preconstruction, pre-development conditions.

iii. All SWPPPs must be prepared in accordance with good engineering practices by qualified (e.g., CPESC certified, engineers with appropriate training) erosion control specialists familiar with the use of soil loss prediction models and design of erosion and sediment control systems based on these models (or equivalent soil

loss prediction tools). Qualifications of the preparer (e.g., professional certifications, description of appropriate training) must be documented in the SWPPP.The Operator(s) must design, implement, and maintain BMPs in the manner specified in the SWPPP.

NMED supports the use of EPA's small residential lot template if a site qualifies to use it as explained inthe permit, as long as it is consistent with the above requirements. NMED's requirement does not preclude small residential sites from using the template, but it may require an additional short paragraphto justify the selection of specific BMPs for the site.

d. Operators must notify NMED when discharges of toxic or hazardous substances or oil from a spill or other release occurs - see Emergency Spill Notification Requirements, Part 2.3.6 of the permit. For emergencies, Operators can call 505-827-9329 at any time. For non-emergencies, Operators can call 866-428-6535 (voice mail 24-hours per day) or 505-476-6000 during business hours from 8am-5pm, Monday through Friday. Operators can also call the NMED Surface Water Quality Bureau directly at 505-827-0187.

e. Operators of small construction activities (i.e., 1-5 acres) are not eligible to qualify for a waiver in lieu of needing to obtain coverage under this general permit based on Item C.3 of Appendix C (Equivalent Analysis Waiver) in the State of New Mexico.

9.6.2 NMR10I000 Indian country within the State of New Mexico, except Navajo Reservation Lands that are covered under Arizona permit AZR10000I and Ute Mountain Reservation Lands that are covered under Colorado permit COR10000I.

a. Nambe Pueblo

i. The operator must provide a copy of the Notice of Intent (NOI) and Notice of Termination (NOT) to the Nambe Pueblo Governor's Office at the same time it is provided to the US Environmental Protection Agency. The NOI and NOT should be provided to the following address:

Office of the Governor Nambe Pueblo

!SA NPI02 WEST

Nambe Pueblo, New Mexico 87506

ii. The operator must provide a copy of the Storm Water Pollution Prevention Plan (SWPPP) to Nambe Pueblo at the same time it is submitted to the EPA, either by email to governor@nambepueblo.org or mailed to the above address.

iii. The operator must provide copies of inspection reports, a copy of the corrective action log, and modifications made to the SWPPP as a result of inspection findings, upon request by the Nambe Pueblo Department of Environmental and Natural Resources or Nam be Governor.

b. Ohkay Owingeh Tribe

i. All operators obtaining permit coverage under the EPA CGP, must submit a copy of the certified (signed) Notice of Intent (NOI) to the Ohkay Owingeh Office of Environmental Affairs, a copy of NOI modifications and the Notice of Termination (NOT), must be provided within three business days after EPA provides electronic confirmation that the submission has been received. The NOI and NOT must be provided to the following address:

Naomi L. Archuleta - Environmental Programs Manager Ohkay Owingeh Office of Environmental Affairs
P.O. Box 717
Ohkay Owingeh, NM 87566
naomi.archuleta@ohkay.org

Noah Kaniatobe - Environmental Specialist Ohkay Owingeh, Office of Environmental Affairs
P.O. Box 717
Ohkay Owingeh, NM 87566
noah.kaniatohe@ohkay.org

ii. All operators obtaining permit coverage under the EPA CGP, must submit an electronic copy of the Storm Water Pollution Prevention Plan (SWPPP) to Ohkay Owingeh Office of Environmental Affairsat the same time that the NOI is submitted to the tribe (see contact information listed above).

iii. Following each incident where the operator takes a corrective action the operator must provide thecorrective action log to the Ohkay Owingeh Office of Environmental Affairs.

iv. The operator must notify Ohkay Owingeh Office of Environmental Affairs within 24 hours, in the event of an emergency spill in addition to the notification requirements at Part 2.3.6 of the CGP. Please contact: Ohkay Owingeh Tribal Police Department at 505.852.2757.

Please contact:
Ohkay Owingeh
Tribal Police Department
505.852.2757

c. Pueblo of Isleta

i. All operators obtaining permit coverage under the EPA CGP must submit a copy of the certified Notice ofIntent (NOI) to the Pueblo of Isleta at the same time it is submitted to EPA for projects occurring within the exterior boundaries of the Pueblo of Isleta. Additionally, a copy of NOI modifications and the Notice of Termination (NOT), must be provided within three business days after EPA provides electronic confirmation that the submission has been received. The Notices must be provided to the following address:

Water Quality Control OfficerPueblo of Isleta
Environment DepartmentPO Box 1270
Isleta NM 87022
505-869-7565
WQCO@isletapueblo.com

ii. The operator must notify the Pueblo of Isleta's Dispatch at 505-869-3030 as soon as possible and thePueblo of Isleta Water Quality Control Officer within 10 hours, in the event of a spill of hazardous ortoxic substances or if health or the

environment become endangered in addition to the notification requirements at Part 2.3.6 and at I.12.6.1 of the CGP.

iii. All operators obtaining permit coverage under the EPA CGP must submit an electronic copy of the Stormwater Pollution Prevention Plan (SWPPP) to the Pueblo of Isleta Water Quality Control Officer atthe above address, 30 days prior to submitting the certified NOI to EPA. If the electronic file is too largeto send through e-mail, a zip file or flash drive may be submitted.

iv. All operators obtaining permit coverage under the EPA CGP must give 2 days advance notice to the Pueblo of Isleta Water Quality Control Officer of any planned changes in the permitted activity whichmay result in noncompliance with permit requirements.

v. All operators obtaining permit coverage under the EPA CGP must post a sign or other notice of permit coverage at a safe, publicly accessible location in close proximity to the construction site. The notice mustbe located so that it is visible from the public road or tribal road that is nearest to the active part of the construction site. The sign must be maintained on-site from the time construction activities begin until final stabilization is met.

vi. Erosion and sediment controls shall be designed to retain sediment on-site and project-generatedwaste materials that have the potential to discharge pollutants shall not be placed on open soil oron a surface that is not stabilized. Volumes of sediment over five (5) cubic yards must be removed from the active construction site; additionally, if sediment is placed for disposal withinthe exterior boundaries of the Pueblo of Isleta, disposal must be within a tribally approved sediment disposal site.

d. Pueblo of Laguna

i. All operators obtaining permit coverage under the EPA CGP must submit an electronic copy of the certified (signed) Notice of Intent (NOI) to the Pueblo of Laguna's Environmental & Natural Resources Department (ENRD) within three business days of submittal to the EPA. Additionally, a copy of NOI modifications and the Notice of Termination (NOT), must be provided within three business days after the EPA provides electronic confirmation that the submission has been received. The NOI and NOT must be electronically submitted to info.environmental@pol-nsn.gov.

ii. All operators obtaining permit coverage under the EPA CGP must submit an electronic copy of the Stormwater Pollution Prevention Plan (SWPPP) to the Pueblo of Laguna's ENRD 14 days prior to the submittal of the NOI (see contact information listed above).

iii. The operator must provide copies of corrective actions logs and modifications made to the SWPPP as a result of inspection findings to the Pueblo of Laguna ENRD (see contact information above).

iv. In addition to the notification requirements of Part 2.3.6 of the CPG ***[EPA interprets this intending to refer to the CGP]***, the operator must notify the Pueblo of Laguna ENRD at 505-552-7512 in the event of an emergency spill as soon as possible.

e. Pueblo of Sandia. The following conditions apply only to discharges on the Pueblo of Sandia Reservation:

i. All operators obtaining permit coverage under the EPA CGP, must submit a copy of the certified (signed) Notice of Intent (NOI) to the Pueblo of Sandia Environment Department concurrently with submittal to the EPA. Additionally, a copy of NOI modifications and the Notice of Termination (NOT), must be provided concurrently with submittal to the EPA. The NOI and NOT must be provided electronically to the following addresses:

Electronic Addresses:

Amy Rosebrough (Water Quality Manager): rosebrough@sanidapueblo.nsn.us
Greg Kaufman (Environment Director):gkaufman@sandiapueblo.nsn.us

ii. All operators obtaining permit coverage under the EPA CGP, must submit an electronic copy of the Stormwater Pollution Prevention Plan (SWPPP) to the Pueblo of Sandia Environment. Department at least 14 days prior to submittal of the NOI to the Pueblo (see contact information listed above).

iii. If requested by the Pueblo of Sandia Environment Department, the permittee must provide additional information necessary on a case-by-case basis to assure compliance with the Pueblo of Sandia Water Quality Standards and/or applicable Federal Standards.

iv. An "Authorization to Proceed Letter" with site specific mitigation requirements may be sent out to the permittee when a review of the NOI and SWPPP, on a case-by-case basis, is completed by the Pueblo of Sandia Environment Department. This approval will allow the application to proceed if all mitigation requirements are met.

v. The Pueblo of Sandia will not allow Small Construction Waivers (Appendix C) to be granted for any small construction activities.

vi. The operator must provide copies of inspection reports, a copy of the corrective action log, and modifications made to the SWPPP as a result of inspection findings to the Pueblo of Sandia Environment Department upon request. An inspection report and corrective action log must be submitted to the Pueblo within 3 days of any inspection that results in corrective action (see contact information listed above).

vii. The operator must notify the Pueblo of Sandia within 24 hours in the event of an emergency spill, in addition to the notification requirements at Part 2.3.6 of the COP (see contact information listed above).

viii. Before submitting a Notice of Termination (NOT) to the EPA, permittees must clearly demonstrate to the Pueblo of Sandia Environment Department through a site visit or documentation that requirements for site stabilization have been met and any temporary erosion control structures have been removed. A short letter stating that the NOT is acceptable and all requirements have been met will be sent to the permittee to add to the permittee's NOT submission to the EPA.

f. Pueblo of Santa Ana. The following conditions apply only to discharges on the Pueblo of Santa Ana Reservation:

i. All operators obtaining permit coverage under the EPA CGP, must submit a copy of the certified (signed) Notice of Intent (NOI) to the Pueblo's Department of Natural Resources within three business days of submittal to EPA. Additionally, a copy of NOI modifications and the Notice of Termination (NOT), must be

provided within three business days after EPA provides electronic confirmation that the submission has been received. The NOI and NOT must be provided to the following address:

Regular U.S. Delivery Mail:
Pueblo of Santa Ana
Department of Natural Resources Water Resources Division
Attn: Andrew Sweetman 02 Dove Rd
Santa Ana Pueblo, NM 87004

Electronically:
Andrew Sweetman
Water Resources Division Manager Andrew.Sweetman@santaana-nsn.gov
Tammy Montoya Hydrologist
Tammy.Montoya@santaana-nsn.gov

ii. All operators obtaining permit coverage under the EPA CGP, must submit an electronic copyof the Stormwater Pollution Prevention Plan (SWPPP) to the to the Pueblo's Department of Natural Resources at the same time that the NOI is submitted to the tribe (see contact information listed above).

iii. The operator must provide copies of inspection reports, a copy of the corrective action log, and modifications made to the SWPPP as a result of inspection findings, upon request by the Pueblo's Department of Natural Resources.

iv. The operator must notify the Pueblo's Department of Natural Resources within 24 hours in the event of an emergency spill, in addition to the notification requirements at Part 2.3.6 of the CGP.

g. Pueblo of Taos

i. All operators obtaining permit coverage under the EPA CGP, must submit a copy of the certified (signed) Notice of Intent (NOi) to the Taos Pueblo Environmental Office and Taos Pueblo Governor's Office within three business days of submittal to EPA. Additionally, a copy of NOi modifications and the Notice of Termination (NOT), must be provided within three business days after EPA provides electronic confirmation that the submission has been received. The NOi and NOTmust be provided to the following addresses:

Honorable Governor of Taos Pueblo PO Box 1846
Taos, New Mexico 87571

Taos Pueblo Environmental Office PO Box 1846
Taos, New Mexico 87571

ii. All operators obtaining permit coverage under the EPA CGP, must submit an electronic copy of theStormwater Pollution Prevention Plan (SWPPP) to the Taos Pueblo Environmental Office when the NOI is submitted to the tribe. Electronic copy of SWPPP downloaded on flash drive may be sent to the above address for the Taos Pueblo Environmental Office.

iii. The operator must provide a copy of the corrective action log following each corrective action undertaken and modifications made to the SWPPP as a result of

a corrective action to the Taos Pueblo Environmental Office at address listed above.

h. Pueblo of Tesuque.

i. All operators obtaining permit coverage under the EPA CGP, must submit a copy of the certified (signed) Notice of Intent (NOI) to the Pueblo of Tesuque Department of Environment and Natural Resources (DENR) and the Pueblo's Governor within three business days of submittal to EPA. Additionally, a copy of any NOi modifications and the Notice of Termination (NOT), must be provided within three business days after EPA provides electronic confirmation that the submission has been received. The NOI and NOT must be provided to the following address:

Governor Mark Mitchell Pueblo of Tesuque
20 TP 828
Santa Fe, NM 87506 governor@puebloftesuque.org

Sage Mountain.flower Pueblo of Tesuque
Department of Environment and Natural Resources Director
20 TP 828

ii. All operators obtaining permit coverage under the EPA CGP, must submit an electronic copyof the Stormwater Pollution Prevention Plan (SWPPP) to Pueblo of Tesuque DENR and the Pueblo's Governor at the same time that the NO! is submitted to the EPA (see contact information listed above).

iii. The operator must provide a copy of the corrective action log, and any modifications made tothe SWPPP as a result of inspection findings, or upon request by the Pueblo of Tesuque DENR.

iv. The operator must notify the Pueblo of Tesuque DENR within 24 hours in the event of an emergency spill, in addition to the notification requirements at Part 2.3.6 of the CGP (seecontact information listed above).

i. Santa Clara Indian Pueblo.

i. All operators obtaining permit coverage under the EPA CGP, must submit a copy of the certified (signed) Notice of Intent (NOI) to the Santa Clara Pueblo Office of Environmental Affairs at the same time the NOI is submitted to the U.S. EPA. Additionally, a copy of the NOI modifications and the Notice of Termination (NOT), must be provided at the same time after electronic confirmation is received from EPA that the NOT has been accepted. The NOI and NOT shall be provided to the following address in electronic format:

Dino Chavarria,
Santa Clara Pueblo
Office of Environmental Affairs
dinoc@santaclarapueblo.org

ii. All operators obtaining permit coverage under the EPA CGP, must submit an electronic copy of the Stormwater Pollution Prevention Plan to the Santa Clara Pueblo Office of Environmental Affairs at the same time the NOI is submitted to the U.S. EPA (see contact information listed above).

iii. The operator must notify the Santa Clara Pueblo Office of Environmental Affairs at the address above within 24 hours, in the event of an emergency spill, in addition to the notification requirements at Part 2.3.6 of the CGP

9.6.3 OKR10I000 Indian country within the State of Oklahoma, except areas of Indian country covered by an extension of state program authority pursuant to Section 10211 of the Safe, Accountable, Flexible, Efficient Transportation Equity Act (SAFETEA).

a. Pawnee Nation. The following conditions apply only to discharges within Pawnee Indian country:

i. Copies of the Notice of Intent (NOI) and Notice of Termination (NOT) must be provided to the Pawnee Nation at the same time it is submitted to the Environmental Protection Agency to the following address:

Pawnee Nation Department of Environmental Conservation and Safety
P.O. Box 470
Pawnee, OK 74058
Or email to dnrs@pawneenation.org

ii. An electronic copy of the Storm Water Pollution Prevention Plan (SWPPP) must be submitted to the Pawnee Nation Department of Environmental Conservation and Safety at the same time the NOI is submitted.

iii. The operator must provide access to the site for inspections and for copies of inspection reports, copy of the corrective action log and modifications, made to the SWPPP because of inspection findings, upon request by the Pawnee Nation DECS.

iv. The Pawnee Nation Department of Environmental Conservation and Safety must be notified at 918.762.3655 immediately upon discovery of any noncompliance with any provision of the permit conditions.

9.6.4 OKR10F000 Discharges in the State of Oklahoma that are not under the authority of the Oklahoma Department of Environmental Quality, or the Oklahoma Department of Agriculture and Forestry including activities associated with oil and gas exploration, drilling, operations, and pipelines (includes SIC Groups 13 and 46, and SIC codes 492 and 5171), and point source discharges associated with agricultural production, services, and silviculture (includes SIC Groups 01, 02, 07, 08, 09).

a. For activities located within the watershed of any Oklahoma Scenic River, including the Illinois River, Flint Creek, Barren Fork Creek, Upper Mountain Fork, Little Lee Creek, and Lee Creek or any water or watershed designated "ORW" in Oklahoma's Water Quality Standards, this permit may only be used to authorize discharges from temporary construction activities. Certification is denied for any on-going activities such as sand and gravel mining or any other mineral mining.

b. For activities located within the watershed of any Oklahoma Scenic River, including the Illinois River, Flint Creek, Barren Fork Creek, Upper Mountain Fork, Little Lee Creek, and Lee Creek or any water or watershed designated "ORW" in Oklahoma's Water Quality Standards, certification is denied for any discharges originating from support activities, including, but not limited to, concrete or asphalt batch plants, equipment staging yards, material storage areas, excavated material disposal areas, or borrow areas.

c. Dewatering discharges into sediment or nutrient-impaired waters, and waters identified as Tier 2, Tier 2.5, or Tier 3 (OAC 785:46-13) shall be controlled to meet water quality standards for turbidity in those waters as follows:

i. Cool Water Aquatic Community/Trout Fisheries: 10 NTUs (OAC 785: 45-5-12(f)(7)(A)(i)

ii. Lakes: 25 NTUs (OAC 785: 45-5-12(f)(7)(A)(ii)

iii. In waters where background turbidity exceeds these values, turbidity from dewatering discharges should be restricted to not exceed ambient levels (OAC 785: 45-5-12(f)(7)(B)

9.7 EPA REGION 7

No additional conditions.

9.8 EPA REGION 8

9.8.1 MTR10I000 Indian country within the State of Montana

a. Blackfeet Nation.

i. The Applicant and applicants for projects authorized under the NWPs should obtain all other permits, licenses, and certifications that may be required by federal, state, or tribal authority. Primary relevant tribal permit will be ALPO (Ordinance 117). Others may apply. It is the applicant's responsibility to know the tribal and local ordinances and complete all necessary permissions before they can commence work.

ii. If a project is unable to meet the enclosed conditions, or if certification is denied for an applicable NWP, the Applicant may request an individual certification from Blackfeet. An individual certification request must follow the requirements outlined in 40 CFR 121.5 of EPA's CWA § 401 Certification Rule, effective September 11, 2020.

iii. Copies of this certification should be kept on the job site and readily available for reference.

iv. If the project is constructed and/or operated in a manner not consistent with the applicable NWP, general conditions, or regional conditions, the permittee may be in violation of this certification.

v. Blackfeet and EPA representatives may inspect the authorized activity and any mitigation areas to determine compliance with the terms and conditions of the NWP.

vi. This NWP Reissuance does not reduce Tribal authority under any other rule.

vii. The project, including any stream relocations and restoration, must be built as shown and as otherwise described in the application, the construction plans, cross sections, mitigation plans and other supporting documents submitted to this office. Impacts to aquatic systems and restoration efforts will be monitored by an appropriate aquatic resource professional to ensure that disturbed areas are restored to at least their original condition.

viii. All existing water uses will be fully maintained during and after the completion of the project. (If applicable)

ix. Where practicable, perform all in-channel and wetland work during periods of low flow or drawn—down or when dry

x. Equipment staging areas must be located out of all delineated wetlands

xi. Appropriate soil erosion and sediment controls must be used and maintained in effective operating condition during and immediately after construction, and all exposed soil and other fills, as well as any work below the ordinary high-water mark or in a wetland, must be permanently stabilized as soon as possible

xii. Materials such as piling, culverts, sandbags, fabric, mats, timbers used for temporary facilities in wetlands or below the high- water mark of Waters of the US must be free from oil, gas, excess dirt, loose paint and other pollutants.

xiii. Equipment staging areas in wetlands or in stream or river channels must be placed on mats, or other measures must be taken to minimize soil disturbance and compaction.

xiv. Clearing of riparian or wetland vegetation for the sole purpose of constructing work bridges, detours, staging areas or other temporary facilities must be limited to the absolute minimum necessary. When temporary impacts to native riparian or wetland vegetation are unavoidable, it must be mowed or cut above ground with the topsoil and root mass left intact.

xv. Remove all temporary fills and structures in the entirety when they are no longer needed. Restore affected areas to the appropriate original and planned contours where possible. Re-vegetate disturbed areas with appropriate native species when native species are impacted.

xvi. Construction methods and best management practices (BMPs) must minimize aquatic resource impacts to the maximum extent possible. Any BMPs described in the Joint Application must be followed. BMPs should include installation and maintenance of sediment control measures; separation, storage and reuse of any topsoil; and recovery of all disturbed areas where possible. All best management practices must in place prior to the onset of construction or as soon as practicable during the construction process.

xvii. Best available technology and/or best management practices must be utilized to protect existing water uses and maintain turbidity and sedimentation at the lowest practical level.

xviii. Applicant/contractor should manage disturbed streambank topsoil in a manner that optimizes plant establishment for the site.

xix. When operating equipment or otherwise undertaking construction in wetlands and water bodies the following conditions apply:

(a) Work should be done in dry conditions if possible.

(b) All equipment is to be inspected for oil, gas, diesel, anti-freeze, hydraulic fluid or other petroleum leaks. All such leaks will be properly repaired and equipment cleaned prior to being allowed on the project site. Leaks that occur after the equipment is moved to the project site will be fixed the same day or the next day or removed from the project area. The equipment is not allowed to continue operation once a leak is discovered.

(c) All equipment is to be inspected and cleaned before and after use to minimize the spread or introduction of invasive or undesirable species.

(d) Construction equipment shall not operate below the existing water surface except as follows:

- Impacts from construction should be minimized through the use of best management practices submitted in the permit application.
- Essential work below the waterline shall be done in a manner to minimize impacts to aquatic system and water quality.

(e) Containment booms and/or absorbent material must be available onsite. Any spills of petroleum products must be reported to the Army Corps, Blackfeet Nation BEO Office and the US EPA within 24 hours.

xx. Upland, riparian and in-stream vegetation should be protected except where its removal is necessary for completion of work. Revegetation should be completed as soon as possible. Applicant/contractor should revegetate disturbed soil in a manner that optimizes plant establishment for the site. Revegetation must include topsoil replacement, planting, seeding, fertilization, liming and weed-free mulching as necessary. Applicant must use native plant material and soils where appropriate and feasible. This certification does not allow for the introduction of non-native flora and fauna. All disturbed surface areas must be restored to pre-construction contours and elevation.

xxi. Spoils piles should not be placed or stored within the delineated wetlands or streams unless protected by a temporary structure designed to divert and handle high flows that can be anticipated during permit activity. Spoils piles should be placed on landscaping fabric or some other material to separate spoils material and allow retrieval of spoils material with minimal impact.

xxii. Impacts to wetlands shall not exceed 4.92 acres.

xxiii. Any unexpected and additional impacts to waters of the US should be reported to the

xxiv. Army Corps, Blackfeet Environmental Office Water Quality Coordinator and the US EPA.

xxv. All instream and stream channel reconstruction work must be completed before the stream is diverted into the new channel.

xxvi. Any temporary crossings, bridge supports, cofferdams, or other structures that are necessary during permit activity should be designed to handle high flows that can be anticipated during permit activity. All temporary structures should be completely removed from the water body at the conclusion of the permitted activity and the area restored to a natural function and appearance.

xxvii. The certification does not authorize any unconfined discharge of liquid cement into the waters of the United States. Grouting riprap must occur under dry conditions with no exposure of wet concrete to the water body.

xxviii. BMPs shall include application of certified weed-free straw or hay across all disturbed wetland areas that are temporarily impacted; installation and maintenance of sediment control measures during construction and if necessary, after construction is completed; use of heavy mud mats if necessary; separation,

storage and reuse of all streambank topsoil and wetland topsoil, as appropriate; and recovery of all disturbed wetland and streambank areas where possible. All conditions set by the Blackfeet Tribe and US Army Corps must be followed.

xxix. All applicants, including federal agencies, must notify EPA and the Blackfeet Environmental Office of the use of all NWPs for which certification has been granted prior to commencing work on the project. Notifications must include:

(a) project location (lat. Long., exact point on map);

(b) NWP that will be used and the specific activity that will be authorized under the NWP;

(c) amount of permanent and temporary fills;

(d) a short summary of the proposed activity, and all other federal, state, tribal or local permits or licenses required for the project;

(e) complete contact information of both the applicant and contractor (name, name of the company or property if applicable, telephone, mobile, and email); and,

(f) Summary of best management practices that will be used.

(g) A summary of communications with the affected Tribe's water quality staff regarding the project, including any concerns or issues.

(h) Notify Blackfeet and EPA at least 7 days before the completion of construction and operations begin.

xxx. Point source discharges may not occur: (1) in fens, bogs or other peatlands; (2) within 100 feet of the point of discharge of a known natural spring source; or (3) hanging gardens.

xxxi. Except as specified in the application, no debris, silt, sand, cement, concrete, oil or petroleum, organic material, or other construction related materials or wastes shall be allowed to enter into or be stored where it may enter into waters of the U.S.

xxxii. Silt fences, straw wattles, and other techniques shall be employed as appropriate to protect waters of the U.S. from sedimentation and other pollutants.

xxxiii. Water used in dust suppression shall not contain contaminants that could violate water quality standards.

xxxiv. Erosion control matting that is either biodegradable blankets or loose-weave mesh must be used to the maximum extent practicable.

xxxv. All equipment used in waters of the U.S. must be inspected for fluid leaks and invasive species prior to use on a project. All fluid leaks shall be repaired and cleaned prior to use or when discovered, or if the fluid leak can't be repaired, the equipment shall not be used on site. Equipment used in waters with the possibility of aquatic nuisance species infestation must be thoroughly cleaned and effectively decontaminated before they are used on the project.

xxxvi. Vegetation should be protected except where its removal is necessary for completion of the work. Locations disturbed by construction activities should be revegetated with appropriate native vegetation in a manner that optimizes plant establishment for the specific site.

xxxvii. Revegetation may include topsoil replacement, planting, seeding, fertilization, liming, and weed-free mulching, as necessary. Where practical, stockpile weed- seed-free topsoil and replace it on disturbed areas. All revegetation materials, including plants and plant seed shall be on site or scheduled for delivery prior to or upon completion of the earth moving activities.

xxxviii. Activities may not result in any unconfined discharge of liquid cement into waters of the U.S. Grouting riprap must occur under dry conditions with no exposure of wet concrete to the waterbody.

xxxix. Activities that may result in a point source discharge shall occur during seasonal low flow or no flow periods to the extent practicable.

xl. The placement of material (discharge) for the construction of new dams is not certified, except for stream restoration projects.

xli. Any decision-maker that is required under 7.0 of the CGP to prepare a Stormwater Pollution Prevention Plan (SWPPP), must submit an electronic copy of the SWPPP to the Blackfeet Environmental Office at least 30 days before construction starts for review and approval. Any modifications to the SWPPP should be submitted to the Blackfeet Environmental Office.

xlii. Any Decision-maker required under Part 1.4 of the CGP to submit a Notice of Intent (NOI) to EPA for coverage under the CGP, must submit a copy of the NOI to the Blackfeet Environmental Office within three business days of submittal to EPA. Additionally, a copy of the Notice of Termination (NOT) must be provided within three business days after electronic confirmation is received from EPA that the NOT has been accepted. The NOI and NOT must be provided to the following address Gerald Wagner, Blackfeet Environmental Office Director.

62 Hospital Drive, Browning, MT 59417

beo.director@gmail.com

b. Fort Peck Tribes.

i. Any Decision-maker required under Part 1.4 of the CGP to submit a Notice of Intent (NOI) to EPA for coverage under the CGP, must submit a copy of the NOI to the Fort Peck Tribes Office of Environmental Protection within three business days of submittal to EPA. Additionally, a copy of the Notice of Termination (NOT) must be provided within three business days after electronic confirmation is received from EPA that the NOT has been accepted. The NOI and NOT must be provided to the following address:

Martina Wilson, Office of Environmental Protection Director

501 Medicine Bear Rd Poplar, MT 59255

martinawilson@fortpecktribes.net

ii. Any Decision-maker that is required under Part 7.0 of the CGP to prepare a Stormwater Pollution Prevention Plan (SWPPP), must submit an electronic copy of the SWPPP to the Fort Peck Tribes Office of Environmental Protection at least 30 days before construction starts for review and approval. Any modifications to the

SWPPP should be submitted to the Fort Peck Tribes Office of Environmental Protection.

iii. Any Decision-maker that is required under Part 8.0 of the CGP to submit a weekly, bi-weekly, and/or annual report to EPA, must submit an electronic copy of the annual report to the Fort Peck Tribes Office of Environmental Protection within three business days after submittal to EPA.

9.9 EPA REGION 9

9.9.1 CAR10I000 Indian country within the State of California

a. Morongo Band of Mission Indians

i. A copy of the Stormwater Pollution Prevention Plan (SWPPP) must be submitted (either mailed or electronically) to the MEPD no less than thirty (30) days before commencing construction activities:

Morongo Band of Mission Indians
Environmental Protection Department
12700 Pumarra Road
Banning, CA 92220
Email: epd@morongo-nsn.gov

ii. Copies of the Notice of Intent (NOI) and the Notice of Termination (NOT) must be sent to the MEPD at the same time they are submitted to EPA.

iii. Operators of an "emergency-related project" must submit notice to the MEPD within twenty- four (24) hours after commencing construction activities.

iv. Spills, leaks, or unpermitted discharges must be reported to the MEPD within twenty-four (24) hours of the incident, in addition to the reporting requirements of the CGP.

v. Projects utilizing cationic treatment chemicals (as defined in Appendix A of the CGP) within the Morongo Reservation are not eligible for coverage under this certification of the CGP.

vi. Facilities covered under the CGP will be subject to compliance inspections by MEPD staff, including compliance with final site stabilization criteria prior to submitting an NOI ***[EPA assumes this intended to refer to an NOT]***.

9.9.2 GUR100000 Island of Guam

a. For purposes of this Order, the term "Project Proponent" shall mean U.S. Environmental Protection Agency, and its agents, assignees, and contractors.

b. For purposes of this Order, the permit "Operator" shall mean any party associated with a construction project that meets either of the following two criteria:

i. The party has operational control over construction plans and specifications, including the ability to make modifications to those plans and specifications (e.g. in most cases this is the owner of the site); or

ii. The party has day-to-day operational control of those activities at a project that are necessary to ensure compliance with the permit conditions (e.g., they are authorized to direct workers at a site to carry out activities required by the permit; in most cases this is the general contractor of the project).

Subcontractors generally are not considered operators for the purposes of this permit.

c. The Project Proponent shall enforce the proposed 2022 CGP and ensure that the Operator complies with the conditions of the permit at all times.[107] (40 CFR §121.11(c))

d. All submittals required by this Order shall be sent to the Guam Environmental Protection Agency Attn: 401 Federal Permit Manager, Non-Point Source Program, EMAS Division, 3304 Mariner Avenue, Bldg. 17-3304, Barrigada, Guam 96913, AND via email to jesse.cruz@epa.guam.gov. The submittals shall be identified with WQC Order #2021- 04 and include the COP Permit Number, certifying representative's name, title, mailing address and phone number. (§51060)(4) 2017 GWQS)

e. A copy of the Operator's signed Stormwater Pollution Prevention Plan (SWPPP) and signed Notice of Intent (NOI) and Notice of Termination (NOT) submitted to EPA for review and approval, shall concurrently be submitted to Guam EPA, consistent with condition A4. Coordination with Guam EPA is encouraged when the receiving water(s) for the proposed discharge is/are being identified. (§10105.B.5.d.) GSESCR; (§51060)(4) 2017 GWQS)

f. The Operator must comply with the conditions and requirements set forth in 22 GAR 10, Guam Soil Erosion and Sediment Control Regulations (GSESCR).

g. Before submitting the NOT to EPA, Operators shall comply with GSESC regulations at §10105.B10. (Stabilization of Affected Areas) and §10107.B. {Final Inspection and Approval)

h. All operators/owners shall comply with the general design criteria for best management practices (BMPs) acceptable for meeting the Construction and Post-construction stormwater criteria in the 2006 CNMI and Guam Stormwater Management Manual. (E.O. 2012-02)

i. Operating reports and monitoring and analytical data (e.g. Discharge Monitoring Reports (DMRs), follow-up monitoring reports, Exceedance Reports for Numerical Effluent Limits, etc.) submitted to EPA shall be concurrently submitted to Guam EPA, consistent with condition A4. §51060)(4) 2017 GWQS

j. The Operators who install a sediment basin or similar impoundment shall maintain the storage capacity of five thousand cubic feet {5,000 cu. ft.) per acre of project area tributary to the basin. (§10105.B.5.i.) GSESCR

k. (1) This Order does not authorize EPA to qualify Rainfall Erosivity Waivers to stormwater discharges associated with small construction activities (i.e. 1-5 acres). Operators are required to apply for an NOI for those projects eligible for coverage under the proposed 2022 CGP. An Erosion and Sediment Control Plan is required for every site that would be covered by the proposed 2022 CGP. (22 GAR §10104) The average annual rainfall for Guam and the CNMI exceeds I00 inches per year in many locations. These climatic conditions combined with the region's unique limestone, volcanic geologic formations, sensitive water resources and significant land

[107] By incorporating this condition into the permit, EPA acknowledges receipt of Guam's certification conditions.

development forces make stormwater discharges a very significant environmental and economic issue. (2006 CNMJ/Guam Stormwater Management Manual) E.O. 2012-02

(2) This Order does not authorize EPA to approve a Sediment TMDL Waiver for the Ugum River. Operators of construction activities eligible for a TMDL Waiver in lieu of coverage under the proposed 2022 CGP, shall submit a complete and accurate waiver certification as described in C.2., Appendix C - (Small Construction Waivers) to Guam EPA per condition A4., prior to notifying EPA of its intention to obtain a waiver. §51060)(4) 2017 GWQS

l. The Project Proponent shall submit to Guam EPA a signed Statement of Understanding of Water Quality Certification Conditions.[108] (see Attachment A for an example) per condition A4. §51060)(4) 2017 GWQS

m. The Operator shall comply with applicable provisions of the Guam Pesticides Act of2007 (10 GCA Chapter 50) and implementing regulations at Title 22 GAR Chapter 15 for any use and application of pesticides.

n. Point source discharge(s) to waterbodies under the jurisdiction of Guam EPA must be consistent with the antidegradation policy in 22 GAR §510l(b).

o. The operator shall carry out construction activities in such a manner that will not violate Guam Water Quality Standards (GWQS). Proposed 2022 CGP discharges are prohibited as follows:

- **i.** In Marine Waters, Category M-1 Excellent 22 GAR Chapter 5 §5102(b)(I); and
- **ii.** In Surface Waters, Category S-1 High 22 GAR Chapter 5 §5102(c)(I)

p. In addition to complying with construction dewatering requirements in Part 2.4 and site inspection requirements for all areas where construction dewatering is taking place in Part 4 of the proposed 2022 CGP, Operators shall comply with all dewatering conditions and requirements set forth in 22 GAR 7, Water Resources Development and Operating Regulations, to include securing Guam EPA permits prior to any dewatering activities.

q. The Operator shall develop and implement a Spill Prevention and Containment Plan.

r. The Operator shall have adequate and appropriate spill response materials on hand to respond to emergency release of oil, petroleum or any other material into waters of the territory.

s. Any unpermitted discharge into territorial waters or onto land with a potential for entry into territorial waters, is prohibited. If this occurs, the Operator shall immediately take the following actions:

- **i.** Cease operations at the location of the violation or spill.
- **ii.** Assess the cause of the water quality problem and take appropriate measures to correct the problem and/or prevent further environmental damage.
- **iii.** Notify Guam EPA of the failure to comply. All petroleum spills shall be reported immediately to:

[108] By incorporating this condition into the permit, EPA acknowledges receipt of Guam's certification conditions.

(a) Guam's Emergency 911 system

(b) Guam EPA's 24-Hour Spill Response Team at (671) 888-6488 or during working hours (671) 300-4751

(c) US Coast Guard Sector Guam (671) 355-4824

(d) National Response Center 1-800-424-8802

iv. Submit a detailed written report to Guam EPA within five days of noncompliance that describes the nature of the event corrective action taken and/or planned, steps to be taken to prevent a recurrence, results of any samples taken, and any other pertinent information.

t. Compliance with this condition does not relieve the Operator from responsibility to maintain continuous compliance with the terms and conditions of this Order or the resulting liability from failure to comply.

u. Submittal or reporting of any of this information does not provide relief from any subsequent enforcement actions for unpermitted discharges to waters of the United States.

v. This Order is valid for five (5) Years from Date of Certification, unless otherwise approved by the Guam EPA Administrator.

w. The Operator shall be required to adhere to the current Guam Coral Spawning Moratorium dates for both hard and soft corals where in-water activities and/or construction activity in close proximity with marine waters may impair water quality. These dates can be obtained from the Guam Department of Agriculture, Division of Aquatic and Wildlife Resources, or the NOAA NMFS Pacific Islands Regional Office Habitat Conservation Division.

x. The Operator shall provide notice to Guam EPA consistent with Condition A4:

(a) Immediately upon discovery of noncompliance with the provisions of this Order.

y. A Notice of Violation/Work Stop Order will be issued if certification conditions are not adhered to or when significant or sustained water quality degradation occurs. Work or discharge shall be suspended or halted until the Operator addresses environmental problems/concerns to Guam EPA's satisfaction. Guam EPA may also levy penalties and fines (10 GCA §47111). Invalidity or enforceability of one or more provisions of this certification shall not affect any other provision of this certification.

9.10 EPA REGION 10

9.10.1 IDR10I000 Indian country within the State of Idaho, except Duck Valley Reservation lands (see Region 9)

a. Shoshone-Bannock Tribes

i. Copies of the following information must be sent to the SBT-WRD:

(a) Notice of Intents (NOI)

The Notice of Intent shall be forwarded to the SBT-WRD within thirty (30) days of receipt of submitting NOI to the USEPA.

Shoshone-Bannock Tribes Water Resources Department
PO Box 306 Pima Drive
Fort Hall, ID 83203 Phone: (208) 239-4582
Fax: (208) 239-4592
Or Email ctanaka@sbtribes.com

b. If requested by the SBT-WRD, the permittee must submit a copy of the SWPPP to SBT-WRD within fourteen (14) days of the request.

9.10.2 ORR10I000 Indian country within the State of Oregon, except Fort McDermitt Reservation lands (see Region 9)

a. Confederated Tribes of Coos, Lower Umpqua, and Siuslaw

i. No activities allowed under the CGP shall result in the degradation of any Tribal waters or affect resident aquatic communities or resident or migratory wildlife species at any life stage.

ii. The operator shall be responsible for achieving compliance with CTCLUSI Water Quality Standards and all other tribal codes, regulations, and laws as they exist at the time that the permit is submitted.

iii. The operator shall submit a copy of the Notice of Intent (NOI) to be covered by the general permit to the CTCLUSI Water Quality Program before, or at the same time as, it is submitted to EPA.

iv. The operator shall be responsible for submitting all Stormwater Pollution Prevention Plans (SWPPP) required under this general permit to the CTCLUSI Water Quality Program for review and determination that the SWPPP is sufficient to meet Tribal Water Quality Standards, prior to the beginning of any discharge activities taking place.

v. The operator shall be responsible for reporting an exceedance to Tribal Water Quality Standards to the CTCLUSI Water Quality Program at the same time it is reported to EPA.

vi. The THPO will be provided 30 days to comment on the APE as defined in the permit application.

vii. If the project is an undertaking, a cultural resource assessment must occur. All fieldwork must be permitted by the THPO (as appropriate), conducted by qualified personnel (as outlined by the Secretary of Interior's Standards and Guidelines; http://www.nps.gov/history/local-law/arch_stnds_O.htm) and documented according to Oregon Reporting Standards (Reporting_Guidelines.pdf) (oregon.gov). The resulting report must be submitted to the THPO and the THPO must concur with the finding of effect and recommendations before any ground disturbing work can occur. The THPO requires 30 days to review all reports.

viii. The operator must obtain THPO concurrence in writing. If historic properties are present, this written concurrence will outline measures to be taken to prevent or mitigate adverse effects to historic properties.

b. Confederated Tribes of the Umatilla Indian Reservation

i. The operator shall be responsible for achieving compliance with the

Confederated Tribes of the Umatilla Indian Reservation's (CTUIR) Water Quality Standards.

ii. The operator shall submit a copy of the Notice of Intent (NOI) to be covered by the general permit to the CTUIR Water Resources Program at the address below, at the same time it is submitted to EPA.

iii. The operator shall be responsible for submitting all Stormwater Pollution Prevention Plans (SWPPP) required under this general permit to the CTUIR Water Resources Program for review and determination that the SWPPP is sufficient to meet Tribal Water Quality Standards, prior to the beginning of any discharge activities taking place.

iv. The operator shall be responsible for reporting an exceedance to Tribal Water QualityStandards to the CTUIR Water Resources Program at the same time it is reported to EPA.

Confederated Tribes of the Umatilla Indian Reservation
Water Resources Program
46411 Timíne Way
Pendleton, OR 97801
(541) 429-7200

v. The THPO will be provided 30 days to comment on the APE as defined in the permit application.

vi. If the project is an undertaking, a cultural resource assessment must occur. All fieldwork must be permitted by the Tribal Historic Preservation Office (as appropriate), conducted by qualified personnel (as outlined by the Secretary of Interior's Standards and Guidelines; http://www.nps.gov/history/local-law/arch_stnds_0.htm) and documented according to Oregon Reporting Standards (Reporting_Guidelines.pdf (oregon.gov). The resulting report must be submitted to the THPO and the THPO must concur with the finding of effect and recommendations before any ground disturbing work can occur. The THPO requires 30 days to review all reports.

vii. The operator must obtain THPO concurrence in writing. If historic properties are present, this written concurrence will outline measures to be taken to prevent or mitigate adverse effects to historic properties.

9.10.3 WAR10F000 Areas in the State of Washington, except those located on Indian country, subject to construction activity by a Federal Operator

a. For purposes of this Order, the term "Project Proponent" shall mean those that are seeking coverage under this permit, and its agents, assignees and contractors.

b. The Federal Agency shall mean the US Environmental Protection Agency. The Federal Agency shall enforce the permit and ensure that the Project Proponent complies with the conditions of the permits at all times.

c. Failure of any person or entity to comply with this Certification may result in the issuance of civil penalties or other actions, whether administrative or judicial, to enforce the terms of this Certification.

d. The Certification conditions within this Order must be incorporated into EPA's final NPDES permit. Per 40 CFR 121.10(a), all certification conditions herein that satisfy the

requirements of 40 CFR 121.7(d) must be incorporated into the permit. Per 40 CFR 121.10(b), the permit must clearly identify all certification conditions.

e. This Certification does not authorize exceedances of water quality standards established in chapter 173-201A WAC.

f. Discharges from construction activity must not cause or contribute to violations of the Water Quality Standards for Surface Water of the State of Washington (chapter 173-201A WAC), Ground Water Quality Standards (chapter 173- 200 WAC), Sediment Management Standards (chapter 173-204 WAC), and standards in the EPA's Revision of certain Federal water quality criteria applicable to Washington (40 CFR 131.45). Discharges that do not comply with these standards are prohibited.

g. Prior to discharge of stormwater and non-stormwater to waters of the State, the Permittee must apply all known, available, and reasonable methods of prevention, control, and treatment (AKART). This includes the preparation and implementation of an adequate Stormwater Pollution Prevention Plan (SWPPP), with all appropriate Best Management Practices (BMPs) installed and maintained in accordance with the SWPPP and the terms and conditions of the permit.

i. BMPs must be consistent with:

(a) The Stormwater Management Manual for Western Washington (most current approved edition at the time this permit was issued), for sites west of the crest of the Cascade Mountains; or

(b) The Stormwater Management Manual for Eastern Washington (most current approved edition at the time this permit was issued), for sites east of the crest of the Cascade Mountains; or

(c) Revisions to either manual, or other stormwater management guidance documents or manuals which provide equivalent level of pollution prevention, that are approved by Ecology and incorporated into this permit in accordance with the permit modification requirements of WAC 173-226-230. (For purposes of this section, the stormwater manuals listed in Appendix 10 of the Phase I Municipal Stormwater Permit are approved by Ecology); or

(d) Documentation in the SWPPP that the BMPs selected provided an equivalent level of pollution prevention, compared to the applicable stormwater management manuals, including:

- The technical basis for the selection of all stormwater BMPs (scientific, technical studies, and/or modeling) that support the performance claims for the BMPs being selected.
- An assessment of how the selected BMP will satisfy AKART requirements and the applicable federal technology-based treatment requirements under 40 CFR part 125.3.

The Stormwater Management Manuals for Eastern and Western Washington can be found at: https://ecology.wa.gov/Regulations-Permits/Guidance-technical-assistance/Stormwater-permittee-guidance-resources/Stormwater-manuals.

ii. An adequate SWPPP must include a narrative and drawings. All BMPs must be clearly referenced in the narrative and marked on the drawings. The SWPPP

narrative must include documentation to explain and justify the pollution prevention decisions made for the project. Documentation must include:

(a) Information about existing site conditions (topography, drainage, soils, vegetation, etc.).

(b) Potential erosion problem areas.

(c) The 13 elements of a SWPPP, including BMPs used to address each element. Unless site conditions render the element unnecessary and the exemption is clearly justified in the SWPPP, the 13 elements are as follows:

- Preserve Vegetation/Mark Clearing Limits
- Establish Construction Access
- Control Flow Rates
- Install Sediment Controls
- Stabilize Soils
- Protect Slopes
- Protect Drain Inlets
- Stabilize Channels and Outlets
- Control Pollutants
- Control Dewatering
- Maintain BMPs
- Manage the Project
- Protect Low Impact Development (LID) BMPs

h. Discharges of stormwater and authorized non-stormwater must be monitored for turbidity (or transparency) and, in the event of significant concrete work or engineered soils, pH must also be monitored. As applicable based on project specifics, monitoring, benchmarks, and reporting requirements contained in Condition S.4. (pp.10-16) of the Washington State Construction Stormwater General Permit, effective January 1, 2021, shall apply.

i. Discharges to segments of waterbodies listed as impaired by the State of Washington under Section 303(d) of the Clean Water Act for turbidity, fine sediment, phosphorus, or pH must comply with the following numeric effluent limits:

Parameter identified in 303(d) listing	Parameter Sampled	Unit	Analytical Method	Numeric Effluent Limit
• Turbidity • Fine Sediment • Phosphorus	Turbidity	NTU	SM2130	25 NTUs at the point where the stormwater is discharged from the site.
High pH	pH	su	pH meter	In the range of 6.5 – 8.5

All references and requirements associated with Section 303(d) of the Clean Water Act mean the most current EPA-approved listing of impaired waters that exists on the

effective date of the permit, or the date when the operator's complete permit application is received by EPA, whichever is later.

The EPA approved WQ Assessment can be found at: https://ecology.wa.gov/Water-Shorelines/Water-quality/Water-improvement/Assessment-of-state-waters-303d

j. Discharges to a waterbody that is subject to a Total Maximum Daily Load (TMDL) for turbidity, fine sediment, high pH, or phosphorus must be consistent with the TMDL.

- **i.** Where an applicable TMDL sets specific waste load allocations or requirements for discharges covered by this permit, discharges shall be consistent with any specific waste load allocations or requirements established by the applicable TMDL.
- **ii.** Where an applicable TMDL has established a general waste load allocation for construction stormwater discharges, but no specific requirements have been identified, compliance with this permit will be assumed to be consistent with the approved TMDL.
- **iii.** Where an applicable TMDL has not specified a waste load allocation for construction stormwater discharges, but has not excluded these discharges, compliance with this permit will be assumed to be consistent with the approved TMDL.
- **iv.** Where an applicable TMDL specifically precludes or prohibits discharges from construction activity, the operator is not eligible for coverage under this permit.

Applicable TMDL means a TMDL for turbidity, fine sediment, high pH, or phosphorus which has been completed and approved by EPA as of the effective date of the permit, or prior to the date of the operator's complete application for permit coverage is received by EPA, whichever is later.

k. Discharges to waters of the state from the following activities are prohibited:

- **i.** Concrete wastewater.
- **ii.** Wastewater from washout and clean-up of stucco, paint, form release oils, curing compounds and other construction materials.
- **iii.** Process wastewater as defined by 40 Code of Federal Regulations (CFR) 122.2.
- **iv.** Slurry materials and waste from shaft drilling, including process wastewater from shaft drilling for construction of building, road, and bridge foundations unless managed to prevent discharge to surface water.
- **v.** Fuels, oils, or other pollutants used in vehicle and equipment operation and maintenance.
- **vi.** Soaps or solvents used in vehicle and equipment washing.
- **vii.** Wheel wash wastewater, unless managed to prevent discharge to surface water.
- **viii.** Discharges from dewatering activities, including discharges from dewatering of trenches and excavations, unless managed according to appropriate controls described within the permit.

l. This Certification is valid until the expiration date including any administrative extension or termination date of the NPDES 2022 Construction General Permit. (40 CFR § 122.46)

m. The Federal Agency shall enforce and the Project Proponent must comply with all the reporting and notification conditions of the NPDES 2022 Construction General Permit in order to comply with this Order and the certification conditions herein (40 CFR § 121.11).

n. You have a right to appeal this Order to the Pollution Control Hearing Board (PCHB) within 30 days of the date of receipt of this Order. The appeal process is governed by chapter 43.21B RCW and chapter 371-08 WAC. "Date of receipt" is defined in RCW 43.21B.001(2).

To appeal you must do all of the following within 30 days of the date of receipt of this Order:

- File your appeal and a copy of this Order with the PCHB (see addresses below). Filing means actual receipt by the PCHB during regular business hours.
- Serve a copy of your appeal and this Order on Ecology in paper form - by mail or in person (see addresses below). E-mail is not accepted.

You must also comply with other applicable requirements in chapter 43.21B RCW and chapter 371-08 WAC.

ADDRESS AND LOCATION INFORMATION

Street Addresses	Mailing Addresses
Department of Ecology Attn: Appeals Processing Desk 300 Desmond Drive SE Lacey, WA 98503 **Pollution Control Hearings Board** 1111 Israel RD SW STE 301 Tumwater, WA 98501	**Department of Ecology** Attn: Appeals Processing Desk PO Box 47608 Olympia, WA 98504-7608 **Pollution Control Hearings Board** PO Box 40903 Olympia, WA 98504-0903

CONTACT INFORMATION

Please direct all questions about this Order to:

Noel Tamboer
Department of Ecology
P.O. Box 47600
Olympia, WA 98503-7600

(360) 701-6171
noel.tamboer@ecy.wa.gov

9.10.4 WAR10I000 Indian country within the State of Washington

a. Lummi Nation

i. This certification does not exempt and is provisional upon compliance with other applicable statutes and codes administered by federal and Lummi tribal agencies. Pursuant to Lummi Code of Laws (LCL) 17.05.020(a), the operator must also obtaina land use permit from the Lummi Planning Department as provided in Title 15 of theLummi Code of Laws and regulations adopted thereunder.

ii. Pursuant to LCL 17.05.020(a), each operator shall develop and submit a Storm WaterPollution Prevention Plan to the Lummi Water Resources Division for review and approval by the Water Resources Manager prior to beginning any discharge activities.

iii. Pursuant to LCL Title 17, each operator shall be responsible for achieving compliance with the Water Quality Standards for Surface Waters of the Lummi

iv. Indian Reservation (Lummi Administrative Regulations [LAR] 17 LAR 07.010 through 17 LAR 07.210 together with supplements and amendments thereto).

v. Each operator shall submit a signed copy of the Notice of Intent (NOI) to the Lummi Water Resources Division at the same time it is submitted electronically to the Environmental Protection Agency (EPA) and shall provide the Lummi Water Resources Division the acknowledgement of receipt of the NOI from the EPA and the associated NPDES tracking number provided by the EPA within 7 calendar days of receipt from the EPA.

vi. Each operator shall submit a signed copy of the Notice of Termination (NOT) to the Lummi Water Resources Division at the same time it is submitted electronically to the EPA and shall provide the Lummi Water Resources Division the EPA acknowledgement of receipt of the NOT.

vii. Storm Water Pollution Prevention Plans, Notice of Intent, Notice of Termination and associated correspondence with the EPA shall be submitted to:

Lummi Natural Resources Department
ATTN: Water Resources Manager 2665 Kwina Road
Bellingham, WA 98226-9298

b. Port Gamble S'Klallam Tribe

i. No discharge from the project site shall cause exceedances of Port Gamble S'KlallamSurface Water Quality Standards narrative or numeric criteria in Tribal waters. This includes activities outside of Tribal lands that occur upstream of Tribal waters.

(a) If any exceedance of these water quality standards occurred, the Natural Resources Department shall be notified immediately.

- The Department shall additionally be provided a complete draft of the proposed corrective action within a reasonable timeframe and its approval will be required before any corrective action may be taken.

ii. Operators performing activities under the CGP that may affect Tribal waters will requirea permit and shall submit their plans to the Port Gamble S'Klallam Natural Resources Department for review.

- The Department has the right to require conditions outside of this Water QualityCertification prior to permit approval.

iii. No activities allowed under the CGP shall result in the degradation of any Tribal watersor change in designated uses.

iv. No activities allowed under the CGP shall affect resident aquatic communities or resident/migratory wildlife species at any life stage.

- Biological assessment methods used to determine the effect of an activity allowedunder the CGP shall be approved by the PGST Natural Resources Department.

v. No activities allowed under the CGP shall be conducted within wetland and stream bufferzones, nor shall said activities affect in any way wetland or stream buffers, as defined by *PGST Law and Order Code 24.08.01(c)*.

vi. Concentrations for substances listed within the table in *Water Quality Standards for Surface Waters* sec. 7(7) shall not be exceeded by activities allowed under the CGP.

c. Spokane Tribe of Indians

i. Pursuant to Tribal Law and Order Code (TLOC) Chapter 30 each operator shall be responsible for achieving compliance with the Surface Water Quality Standards of the Spokane Tribe. The operator shall notify the Spokane Tribe, Water Control Board (WCB) of any spills of hazardous material and;

ii. Each operator shall submit a signed hard copy of the Notice of Intent (NOI) to the WCB at the same time it is submitted to EPA.

iii. The permittee shall allow the Tribal Water Control Board or its designee to inspect and sample at the construction site as needed.

iv. Each operator shall submit a signed copy of the Notice of Termination (NOT) to the WCB at the same time it is submitted to EPA

The correspondence address for the Spokane Tribe Water Control Board is:

Water Control Board c/o Brian Crossley PO Box480
Wellpinit WA 99040
(509)626-4409
crossley@spokanetribe.com

d. Swinomish Tribe

i. Owners and operators seeking coverage under this permit must submit a copy of the Notice of Intent (NOI) to the DEP at the same time the NOI is submitted to EPA.

ii. Owners and operators must also submit to the DEP changes in NOI and/or Notices of Termination at the same time they are submitted to EPA.

iii. Owners and operators seeking coverage under this permit must also submit a Stormwater Pollution Prevention Plan to the DEP for review and approval by DEP prior to beginning any discharge activities.

e. Tulalip Tribes

i. Submission of NOI: Copies of the Notice of Intent (NOI),) Certification shall be submitted to the Tribe's Natural Resources Department to notify the Tribes of the

pending project and in order for the Tribes to review the projects potential impacts to endangered or threatened species.

ii. Submission of SWPPP: A copy of the Stormwater Pollution Plans (SWPPPs) shall be submitted to the Tribe's Natural Resources Department along with the NOI during the 30 day waiting period.

iii. Submission of Monitoring Data and Reports: The results of any monitoring required by this permit and reports must be sent to the Tribe's Natural Resources Depa1tment,

iv. The Tulalip Tribes are federally recognized successors in the interest to the Snohomish, Snoqualmie, Skykomish, and other allied tribes and bands signatory to the Treaty of Point Elliott.

v. including a description of the corrective actions required and undertaken to meet effluent limits or benchmarks (as applicable).

vi. Authorization to Inspect: The Tribe's Natural Resources Department may conduct an inspection of any facility covered by this permit to ensure compliance with tribal water quality standards. The Department may enforce its certification conditions.

vii. Submission of Inspection Reports: Inspection reports must be sent to the Tribe's Natural Resources Department, including a description of the corrective actions required and undertaken to meet effluent limits or benchmarks (as applicable).

viii. Permits on-site: A copy of the pe1mit shall be kept on the job site and readily available for reference by the construction supervisor, construction managers and foreman, and Tribal inspectors.

ix. Project Management: The applicant shall ensure that project managers, construction managers and foreman, and other responsible parties have read and understand conditions of the permit, this certification, and other relevant documents, to avoid violations or noncompliance with this certification.

x. Emergency Spill Notification Requirements: In the event of a spill or the contractor shall immediately take action to stop the violation and correct the problem, and immediately repo1t spill to the Tulalip Tribes Police Department (425) 508-1565. Compliance with this condition does not relieve the applicant from responsibility to maintain continuous compliance with the tem1S and conditions of this certification or the resulting liability from failure to comply.

xi. Discharges to CERCLA Sites: This permit does not autho1ize direct stormwater discharges to certain sites undergoing remedial cleanup actions pursuant to the Comprehensive Environmental Response, Compensation and Liability Act (CERCLA) unless first approved by the appropriate EPA Regional office. In the case of the Tulalip Landfill site (WAD980639256), the Tulalip Tribes also requests notification by the facility and consultation with EPA prior to discharge. Contaminants at this site may include but are not limited to: dioxins, furans, arsenic, copper, lead, zinc, 4- methyl-phenol, Hex-CB, HPAHs, PCBs, PCE, cadmium, mercury, and LPAHs.

xii. Discharge-related Activities that have Potential to Cause an Adverse Effect on Historic Properties: Installation of stormwater controls that involve subsurface disturbances may potentially have an adverse impact on historic properties.

xiii. Procedures detailed in the permit shall be completed. Richard Young, of the Tulalip Tribe's Cultural Resources Department shall be contacted prior to initiating discharge- related activities that may have an impact on historic properties. His contact information is (360) 716-2652, ryoung@tulaliptribes-nsn.gov.

xiv. Invalidation: This certification will cease to be valid if the project is constructed and/or operated in a manner not consistent with the project description contained in

xv. the permit. This certification will also cease to be valid and the applicant must reapply with an updated application if info1mation contained in the permit is voided by subsequent submittals.

xvi. Modification: Nothing in this certification waives the Tulalip Tribes of Washington's authority to issue modifications to this ce1iification if additional impacts due to operational changes are identified, or if additional conditions are necessary to protect water quality or further protect the Tribal Communities interest.

xvii. incorporation by reference: TI1is certification does not exempt the applicant from compliance with other statues and codes administered by the Tribes, county, state and federal agencies.

xviii. Compliance with Tribe's I996 Water Quality Standards: Each permittee shall be responsible for controlling discharges and achieving compliance with the T1ibe's Water Quality Standards.

xix. Compliant with Tulalip Tribes Tidelands Management Policy: Permittee shall be responsible for achieving compliance with applicable sections of the Tulalip Tribe's Tidelands Management Policy. (Tulalip Tribal Code Title 8 Chapter 8.30).

xx. Compliant with Tulalip Tribes Environmental Infractions: Permittee shall be responsible for achieving compliance with applicable sections of the Tulalip Tribe's Environmental Infractions. (Tulalip Tribal Code Title 8 Chapter 8.20).

xxi. Where to Submit information and for further Coordination: All requested documents should be sent to the: Tulalip Tribes Natural Resources Environmental Department c/o Kurt Nelson and Valerie Streeter, 6704 Marine Drive, Tulalip, Washington 98271. For further 40 I Certification coordination with the Tulalip Tribes Natural Resources Department, please contact Mr. Kurt Nelson (360) 716-4617 knelson@tu1aliptribes- nsn.gov. 6406 Marine Dr., Tulalip WA 98271.

f. Makah Tribe

i. The permittee shall be responsible for meeting any additional permit requirements imposed by EPA necessary to comply with the Makah Tribe's Water Quality Standards if the discharge point is located within the Makah's U&A treaty reserved areas.

ii. Each permittee shall submit a copy of the Notice of Intent (NOI) to be covered by the general permit to Makah Fisheries Management, Water Quality Department at the address listed below at the same time it is submitted to the EPA.

Makah Water Quality
Makah Fisheries Management (MFM)
ray.colby@makah.com

PO Box 115
Neah bay, WA 98357

iii. All supporting documentation and certifications in the NOI related to coverage under the general permit for Endangered Species Act purposes shall be submitted to the Tribe's Habitat programs for their review.

iv. If EPA requires coverage under an individual or alternative permit, the permittee shall submit a copy of the permit to Assistant Fisheries Director, ray.colby@makah.com.

v. The permittee shall submit all Stormwater Pollution Prevention plan (SWPP) to MFM for review and approval prior to beginning any activities resulting in a discharge to Makah tribal waters.

vi. The permittee shall notify Ray Colby, ray.colby@makah.com (360) 645-3150 prior to conducting inspections at construction sites generating stormwater discharges to tribal waters.

vii. The operator shall treat dewatering discharges with controls necessary to minimize discharges of pollutants to surface waters, or ground waters, and from stormwater runoff onsite from excavations, trenches, foundations, or storage areas. To the extent feasible, at all points where dewatering is discharged, comply with the velocity dissipation using check dams, sediment traps, and grouted outlets.

g. Puyallup Tribe of Indians

i. The permittee shall be responsible for meeting any additional permit requirements imposed by EPA necessary to comply with the Puyallup Tribe's antidegradation procedures.

ii. Each permittee shall submit a copy of the Notice of Intent (NOI) to be covered by the general permit to Char Naylor, Tribal Water Quality Manager at the following e-mail address: (char.naylor@puyalluptribe-nsn.gov) at the same time it is submitted to EPA.

iii. All supporting documentation and certifications in the NOI related to coverage under the general permit for Endangered Species Act purposes shall be submitted to Char Naylor, Tribal Water Quality Manager/Assistant Fisheries Director (char.naylor@puyalluptribe-nsn.gov) for review.

iv. If EPA requires coverage under an individual or alternative permit, the permittee shall submit a copy of the permit to Char Naylor at the email address listed above.

v. The permittee shall submit all stormwater pollution prevention plans to Char Naylor for review and approval prior to beginning any activities resulting in a discharge to Puyallup tribal waters.

vi. The permittee shall contact Brandon Reynon (Brandon.reynon@puyalluptribe-nsn-gov), Tribe's Historic Preservation Officer or Jennifer Keating (Jennifer.keating@puyalluptribe-nsn.gov), Tribe's Assistant Historic Preservation Officer regarding historic properties and cultural resources.

vii. To minimize the discharge of pollutants to groundwater or surface waters from stormwater that is removed from excavations, trenches, foundations, vaults, or

other storage areas, treat dewatering discharges with controls necessary to minimize discharges of pollutants. Examples of appropriate controls include sediment basins or sediment traps, sediment socks, dewatering tanks, tube settlers, weir tanks, and filtration systems (e.g., bag or sand filters) that are designed to remove sediment.

To the extent feasible, utilize vegetated, upland areas of the site to infiltrate dewatering water before discharge. At all points where dewatering water is discharged, utilize velocity dissipation controls. Examples of velocity dissipation devices include check dams, sediment traps, riprap, and grouted riprap at outlets.

viii. The permittee shall provide and maintain natural buffers to the maximum extent possible (and/or equivalent erosion and sediment controls) when tribal waters are located within 100 feet of the boundaries. If infeasible to provide and maintain an undisturbed 100 foot natural buffer, erosion and sediment controls to achieve the sediment load reduction equivalent to a 100-foot undisturbed natural buffer shall be required.

NHESP Approval

MASSWILDLIFE

DIVISION OF
FISHERIES & WILDLIFE

1 Rabbit Hill Road, Westborough, MA 01581
p: (508) 389-6300 | f: (508) 389-7890
MASS.GOV/MASSWILDLIFE

July 14, 2023

Kate Schassler
250 Apollo Drive
Chelmsford, MA 01824

RE: Applicant: Kate Schassler
Project Location: 1515 Granville Road, Westfield, MA
Project Description: 42-inch Water Pipeline Repairs and Energy Dissipation Valve Chamber at West Parish Filter
NHESP File No.: 23-7342

Dear Applicant:

The Natural Heritage & Endangered Species Program of the Massachusetts Division of Fisheries & Wildlife (the "Division") received the MESA Project Review Checklist and supporting documentation for review pursuant to the Massachusetts Endangered Species Act (MESA) (MGL c.131A) and its implementing regulations (321 CMR 10.00).

The MESA is administered by the Division, and prohibits the Take of state-listed species. The Take of state-listed species is defined as "in reference to animals…harm…kill…disrupt the nesting, breeding, feeding or migratory activity…and in reference to plants…collect, pick, kill, transplant, cut or process…Disruption of nesting, breeding, feeding, or migratory activity may result from, but is not limited to, the modification, degradation, or destruction of Habitat" of state-listed species (321 CMR 10.02).

The Division has determined that this Project, as currently proposed, will occur **within** the actual habitat of the following species:

Scientific Name	Common Name	Taxonomic Group	State Status
Antrostomus vociferus	Eastern Whip-poor-will	Bird	Special Concern

This species and their habitats are protected in accordance with the MESA.

Based on the information provided and the information contained in our database, the Division finds that a portion of this project, as currently proposed, **must be conditioned** to avoid a prohibited Take of state-listed species (321 CMR 10.18(2)(a)). **To avoid a prohibited Take of state-listed species, the conditions attached to this**

letter must be met.

Provided the attached conditions are fully implemented and there are no changes to the project plans, this project will not result in a Take of state-listed species. We note that all work is subject to the anti-segmentation provisions (321 CMR 10.16) of the MESA. This determination is a final decision of the Division of Fisheries and Wildlife pursuant to 321 CMR 10.18. Any changes to the proposed project or any additional work beyond that shown on the site plans may require an additional filing with the Division pursuant to the MESA. This project may be subject to further review if no physical work is commenced within five years from the date of issuance of this determination, or if there is a change to the project.

Please note that this determination addresses only the matter of state-listed species and their habitats. If you have any questions regarding this letter please contact Alexandra Echandi, Endangered Species Review Biologist, at alexandra.echandi@mass.gov or 508-389-6354.

Sincerely,

Everose Schlüter, Ph.D.
Assistant Director

cc: Jennifer Doyle
James Laurila, Springfield Water and Sewer Commission

Attachment: List of Conditions

List of Conditions

Applicant: Kate Schassler
Project Location: 1515 Granville Road, Westfield, MA
Project Description: 42-inch Water Pipeline Repairs and Energy Dissipation Valve Chamber at West Parish Filter
NHESP File No.: 23-7342
Heritage Hub Form ID: RC-63545
Approved Plan: West Parish Filters Energy Dissipation Valve Chamber
Plan date: July 2023 Revised Date: N/A

To avoid a prohibited Take of state-listed species, the following condition(s) must be met:

1. **Limits of Work:** No work or alteration to the soil, surface, or vegetation shall occur outside of the limits of work shown on the site plan unless otherwise approved in writing in advance by the Division.
2. **Use of Native Species:** Unless otherwise approved in writing by the Division, all seed and plantings not thereafter maintained as lawn shall be native to the county, as provided in The Vascular Plants of Massachusetts: A County Checklist, First Revision (Dow Cullina, Connolly, Sorrie & Somers, 2011).

MASSWILDLIFE

DIVISION OF
FISHERIES & WILDLIFE

1 Rabbit Hill Road, Westborough, MA 01581
p: (508) 389-6300 | f: (508) 389-7890
MASS.GOV/MASSWILDLIFE

September 06, 2023

Kate Schassler
AECOM
250 Apollo Drive
Chelmsford, MA 01824

RE: Project Location: 1515 Granville Road, Westfield, MA
Project Description: 42-inch Water Pipeline Repairs and Energy Dissipation Valve Chamber at West Parish Filter
Town: Westfield
NHESP File No.: 23-7342

Dear Applicant:

The Natural Heritage & Endangered Species Program of the MA Division of Fisheries and Wildlife (the "Division") has received and reviewed revised plans entitled 42-Inch Raw Water Bypass Conveyance Pipeline Rehabilitation and Energy Dissipation valve Chamber prepared by AECOM (dated August 17, 2023 and October 2023) for the subject project. The revised plans include an expansion of the Limit of Work at the proposed EDV Chamber requiring the removal of an additional 3800 square feet of trees.

The Division finds that the revised plans do not change our previous determination that this project **will not result in a prohibited Take** of state-listed rare species (Division letter dated July 14, 2028) and that previous determination stands.

We note that all work is subject to the anti-segmentation provisions (321 CMR 10.16) of the MESA. Any activity not included in the current filing and located within Priority Habitat may require an additional filing with the Division for review if not otherwise exempt. If no physical work is commenced on the above proposed project within five years from the date of issuance of our original letter or there is a material change in the plans that were submitted to the Division, updated information and/or plans must be sent to the Division for review prior to any work.

Please contact Alexandra Echandi, Endangered Species Review Biologist at alexandra.echandi@mass.gov.

Sincerely,

Everose Schlüter, Ph.D.
Assistant Director

cc: Jennifer Doyle
James Laurila, Springfield Water and Sewer Commission

DEP Permit Approval

Commonwealth of Massachusetts
Executive Office of Energy & Environmental Affairs

Department of Environmental Protection
Western Regional Office • 436 Dwight Street, Springfield MA 01103 • 413-784-1100

Maura T. Healey
Governor

Kimberley Driscoll
Lieutenant Governor

Rebecca L. Tepper
Secretary

Bonnie Heiple
Commissioner

ISSUED ELECTRONICALLY ONLY

James R. Laurila
Springfield Water & Sewer Commission
1515 Granville Road, Westfield, MA 01085
Westfield, Massachusetts 01085
James.Laurila@waterandsewer.org
413-310-3542

October 5, 2023

Re: WATER QUALITY CERTIFICATION
Application for: BRP WW 11
MINOR FILL AND EXCAVATION PROJECT
42-inch Water Pipeline Repairs and Energy Dissipation Valve (EDV) Chamber at West Parish Filters (WPF)
1515 Granville Road
Westfield, Massachusetts

USACOE Application Number:	n/a
MassDEP Wetlands File Number:	333-0836
MassNHESP File Number:	23-7342
Authorization Number:	**WW11-0000022**

Dear Mr. Laurila:

The Massachusetts Department of Environmental Protection (hereinafter the Department) has completed its Technical Review of the permit application for the project listed above. In accordance with the provisions of Massachusetts General Laws, Chapter 21, Sections 26 through and including 53 and the Regulations promulgated thereunder at 314 CMR 9.00, and its subpart at 314 CMR 9.09(1)(c); and Section 401 of the federal Clean Water Act as amended (33 USC §1251 et seq.), it has been determined that there is reasonable assurance this utility project will be conducted in a manner which will not violate applicable Surface Water Quality Standards at 314 CMR 4.00 *Massachusetts Surface Water Quality Standards* as implemented and supplemented, without limitation at 314 CMR 9.00; and other applicable requirements of state law.

Findings:

- The Activity (as defined at 314 CMR 9.02) described within the Water Quality Certification application and supplemental information (hereinafter the "application") will result in the Discharge of Dredged or Fill Material (hereinafter "Discharge") into and within Waters of the United States within the Commonwealth (hereinafter "WUSWC") [each as defined at 314 CMR 9.02] at the Project Locus described below;
- The application involves a Lot (as defined at 314 CMR 9.02) with a street address of 1515 Granville Road, located within the City of Westfield, Hampden County, Massachusetts, and additionally referred to as Assessor's Map 20R, Lot 2 (hereinafter the "Project Locus");
- The Project Locus contains and includes WUSWC which have been determined to meet the jurisdictional definition of Bordering Vegetated Wetland (BVW), Isolated Vegetated Wetland (IVW), [each as defined at 314 CMR 9.02]; and Land Under Water (LUW);
- The Department hereby approves the following site plan(s) and documents as the "plan(s) of record":
    - "West Parish Filters Energy Dissipation Valve Chamber," dated October 2023
    - "42-inch Raw Water Bypass Conveyance Pipeline Rehabilitation Return to Service Work Order No. 20A-08," dated September 7, 2023;
- As shown on the plan(s) of record, the boundary of the Bordering Vegetated Wetland(s) on the parcel in question are demarcated via flags:
    - W1-1 through and including W1-15
    - W1-19 through and including W1-23
    - W1-100 through and including W1-104
    - W2-1 through and including W2-15 (Sedimentation Basin Wetland)
    - W3-1 through and including W3-27 (Sedimentation Basin Wetland)
    - W6-1 through and including W6-17 (Sedimentation Basin Wetland);
- As shown on the plan(s) of record, the boundary of the Isolated Vegetated Wetland(s) on the parcel in question are demarcated via flags:
    - W2-01 through and including W2-05a
    - W3-01 through and including W3-07;
- As shown on the plan(s) of record, the boundary of Land Under Water on the parcel in question is demarcated at the High Water Mark [as defined at 314 CMR 9.02], via flags:
    - IS1-001 through and including IS1-003
    - IS1-101 through and including IS1-103
    - IS3-001 through and including IS3-002
    - IS3-101 through and including IS3-102
    - S5-15 through and including S5-20;
- The Bordering and/or Isolated Vegetated Wetlands and/or Land Under Water (collectively WUSWC) bounded as described above constitute the "Project Site";
- The Department has determined that the project, as shown on the plan(s) of record and further described in supplemental information, is the "least environmentally damaging practicable alternative", and therefore meets the criteria at 314 CMR 9.06(1);

- The project, as approved in this Water Quality Certification, will result in the Discharge into: 2,600 square feet of Bordering Vegetated Wetland; 1,800 square feet of Isolated Vegetated Wetland; and 4 square feet of Land Under Water associated with an unnamed intermittent stream;
- The sum of these proposed activities will result in the Discharge into **4,404** square feet of WUSWC;
- Per the authority of the Department at 314 CMR 9.09(1)(d), the Department has determined that the **4,400** square foot *in situ* Bordering and Isolated Vegetated Wetland Restoration Areas described within the plan(s) of record and supporting documentation meet the criteria at 314 CMR 9.06(2)(a); and adequately minimizes damage to the Aquatic Ecosystem [as defined at 314 CMR 9.02] therein associated, and as conditioned by this Water Quality Certification;
- Per the authority of the Department at 314 CMR 9.09(1)(d), the Department has determined that the proposed project maintains water quality within Land Under Water on the Site, and adequately minimizes damage to the Aquatic Ecosystem [as defined at 314 CMR 9.02] therein associated, through application of the mitigation proposed, and as conditioned by this Water Quality Certification;
- The Department has determined that the unnamed intermittent stream (IS1) is an Outstanding Resource Waters (ORW) (as defined at 314 CMR 9.02) and that the proposed project may proceed within the ORW per the allowance at 314 CMR 9.06(3)(a).
- The Department has determined that proposed Activities will occur, at least in part, within WUSWC that is also designated Rare Species Habitat (as defined at 314 CMR 9.02), and after consultation with the Natural Heritage and Endangered Species Program of the Massachusetts Division of Fisheries and Wildlife, has approved and conditioned such Activities in accordance with 314 CMR 9.06(2).
- Per the authority of the Department at 314 CMR 9.09(1)(d), the Department has determined that the use of temporary construction mats is a best management practice to minimize adverse impacts to WUSWC.

Water Quality Certification Conditions for Authorization Number WW11-0000022

Therefore, based on information currently in the record, the Department **grants a Water Quality Certification** (hereinafter "Certification") for this project subject to the following conditions necessary to maintain water quality, to minimize impact to WUSWC, and to ensure compliance with appropriate state law:

Administrative and Procedural Conditions

1. This Certification does not relieve the permittee or any other person or party of the necessity of complying with all other applicable federal, state, or municipal statutes, ordinances, bylaws, or regulations, including those administered by the US Army Corps of Engineers. Activities, as defined at 314 CMR 9.02 Activity, conducted in accord with this Certification may only begin following the twenty-one (21) calendar day appeal period, as specified at 314 CMR 9.09(1)(e) and 314 CMR 9.10(2), and once all other required permits and licenses have

been received. The permittee shall comply with all the Conditions of the "Department of the Army General Permits, Commonwealth of Massachusetts" (US Army Corps of Engineers, effective on June 2, 2023) (available from the US Army Corps of Engineers, New England District, Regulatory Division at www.nae.usace.army.mil). The General Permits Conditions therein hereby form a part of, and are inseparable from, this Certification.

2. This Certification does not grant any property rights or any exclusive privileges; it does not authorize any injury to private property or invasion of property rights.
3. The permittee, property owner, all successors and assigns in interest or control of the property subject to this Certification and any contractor or other person performing work conditioned by this Certification shall adhere to **all** applicable procedural and technical Conditions of this Certification. All work upon or within WUSWC allowed per this Certification shall be accomplished by reference to the plan(s) of record, and to the several Conditions of this Certification. In the event of any conflict between the several Conditions of this Certification and the plans of record, the Conditions of this Certification shall prevail.
4. The permittee shall arrange to procure and submit a good resolution electronic copy of the plans of record (as referenced above, and as finalized by the Department prior to submittal) at least ten (10) business days prior to the initiation of activities at the Project Site. Upon review and acceptance of these plans of record by the Department, the Department will affix a prominent "Approved by MassDEP on Month, Date 2023" label upon each sheet, and electronically send the plans of record to the permittee. A copy shall be retained by the Department as a permanent record, and a copy shall be retained by the permittee and the general contractor (or equivalent) and made available on appropriately sized paper when requested. Thereafter, all work conducted per this Certification shall fully and completely comply with these plans of record.
5. Prior to the initiation of activities permitted by this Certification, the permittee shall arrange for a videoconference to be held with the Department's Western Region Wetlands Program. It shall be the responsibility of the permittee to propose a platform for this videoconference, with whatever security protocols they may require; and to ensure that their representative(s) (if any), as well as the general contractor, all appointed compliance monitors and environmental consultants required within this Certification (if any), and all other pertinent firms or persons, are in attendance. The permittee shall also ensure that all plans of record, contracts, and other pertinent documents are made available and viewable at this videoconference. No activities otherwise permitted by this Certification may proceed until this videoconference has been held.
6. Should contractors not be able to build according to the plan(s) of record (or any sheet, detail, schematic, or collar note therein) approved in this Certification, because said plans do not to accurately reflect site conditions (or standard construction methodologies, or practical construction considerations), the Department maintains the right to require an immediate cessation of work, in whole or in part. Should the Department, at its sole discretion, require such cessation, it shall do so in writing to the permittee, and such notice shall require adequate interim erosion and sedimentation controls and the submittal of proposed plan revisions that address the inadequacies, and result in the same or reduced Discharges to WUSWC as approved in the plan(s) of record. Activities shall not recommence until written approval to proceed has been issued by the Department.

7. The unnamed intermittent stream (IS1) and its associated tributaries and Bordering Vegetated Wetlands (Sedimentation Basin Wetlands W2 and W3) are classified in the Massachusetts Surface Water Quality Standards (314 CMR 4.00) as Class A, Outstanding Resource Waters. As such, they are protected by the antidegradation provisions specified in 314 CMR 4.04(1) and 314 CMR 4.04(3)(b)2. The antidegradation provisions are implemented and supplemented, without limitation, by 314 CMR 9.00, per 314 CMR 9.01(3). Therefore, **extraordinary** care and diligence shall be taken by the permittee to assure that the proposed activity will be conducted in a manner that will avoid violations of these Standards.
8. The contractor(s) employed to execute vegetation removal, earth-moving, demolition, and/or motorized vehicle operation activities on the property subject to this Certification must be provided a copy of this Certification prior to the commencement of any such activities. Said contractor(s) may be held responsible with the permittee and property owner for violations by the contractor and may be subject to penalties authorized by law and/or regulation for those violations.
9. This Certification specifically prohibits any Activity (as defined at 314 CMR 9.02) within or upon any WUSWC not specifically authorized by this Certification. Any failure to abide by the Conditions of this Certification that results in or contributes to a Discharge into WUSWC shall result in an enforcement action by and at the discretion of the Department, and possibly other regulatory agencies.
10. As this project has been determined to meet the definition of Single and Complete Project at 314 CMR 9.02, the amount of proposed Discharge within WUSWC permitted by this Certification shall not be exceeded, regardless of future project modifications or any proposed modifications under Condition #11 of this Certification. This prohibition does not expire.
11. The Department shall be notified in writing of any proposed changes in construction methodology or design necessary to complete this project. Any proposed modifications involving additional Discharge are strictly prohibited. Proposed reduction of Discharge may be submitted under this Condition. Based upon submittals under this Condition, the Department will determine whether any proposed changes will require an "Amendment" to this Certification per the Department's authority at 314 CMR 9.09(2).
12. Failure to comply with this Certification is grounds for enforcement, including but not limited to civil and criminal penalties, under MGL c. 21, § 42; 314 CMR 9.00; MGL c. 21A, § 16; 310 CMR 5.00; or other possible actions/penalties as authorized by the General Laws of the Commonwealth of Massachusetts.
13. Department staff shall have the right to enter and inspect the property subject to this Certification at reasonable hours to evaluate compliance with the Conditions of this Certification.
14. This Water Quality Certification expires on June 1, 2028, unless the US Army Corps of Engineers, New England District, Regulatory Division specifically authorizes a different expiration date in writing in a Pre-Construction Notification Authorization or Individual Permit issued under § 404 of the federal Clean Water Act and the "Department of the Army General Permits, Commonwealth of Massachusetts" (US Army Corps of Engineers, effective June 2, 2023) issued thereunder.

Site Stabilization Conditions

15. This Certification prohibits the discharge of any amount of untreated sediment-laden stormwater at any time from within or adjacent to the Project Site to any WUSWC outside the demarcated limit-of-work, as shown on the plan(s) of record. This prohibition applies regardless of any structural or nonstructural stormwater best management practices otherwise required by this Certification or any other regulatory authority; and despite any singular precipitation event, climactic pattern, or related phenomena. Discharges of untreated sediment-laden stormwater in violation of this Condition would constitute a violation of this Certification and could result in enforcement actions taken by the Department, and possibly other regulatory agencies.
16. Prior to commencement of any work on the Site, adequate erosion and sedimentation control measures shall be implemented, including any necessary controls not specifically referenced in the plan(s) of record, and they shall be maintained in effect throughout the entire project, and until the Site has become stabilized with an adequate vegetative or landscaping cover. Structural failure of the erosion and sedimentation controls required by this Certification, and subsequent discharge of untreated stormwater to WUSWC, would constitute a violation of this Certification, and could result in enforcement actions taken by the Department, and possibly other regulatory agencies.
17. Prior to the commencement of any earth-moving activity, a double-staked weed-free straw bale barrier (end to end) shall be placed along the limit of activity between all disturbed areas and WUSWC not subject to Discharge, regardless of what is shown on the plan(s) of record. Each bale shall be properly bound with at least two (2) lengths of twine or wire and shall be entrenched to an excavated depth of at least four (4) inches, but no greater than six (6) inches. Excavated spoils from entrenching shall be deposited on the up-gradient side of the barrier. Bales shall be tightly butted against each other. A geotextile siltation fence shall be placed on the down-gradient side of the aforementioned straw bale barrier and shall be entrenched in a like manner such that the base of the fabric lies below grade extending at least six (6) inches away from the fence. This fence shall be located no further than twelve (12) inches from the down-gradient side of the straw bale barrier. These erosion and sedimentation controls shall be constructed and installed per this Condition and shall be maintained in proper functioning condition until all disturbed areas have been stabilized, or until the Department has determined that the control measures are no longer necessary. The geotextile siltation fence shall constitute a limit-of-work-line. No work shall be permitted on the down-gradient side (the WUSWC side) of this line under this Certification.

Compliance Monitoring Conditions

18. At least ten (10) business days prior to the video conferenced referenced at Condition #5, the permittee shall nominate one or more compliance monitors in writing, who shall be accepted in writing by the Department. Nominated compliance monitors shall have adequate and relevant education, training, and/or experience necessary to understand and perform the duties described herein, and the Department reserves the right to accept nominees based upon its review of such education, training, and/or experience, as documented in resumes submitted to the Department. The approved compliance monitor(s) shall personally observe

all "construction activity" at all times within all WUSWC permitted by this Certification and subject to it (said compliance monitor can be the same person identified at Condition #19 of this Certification). For purposes of this Certification, "construction activities" are all activities (as defined at 314 CMR 9.02 Activity) within WUSWC which entail the placement and/or extraction of fill or materials including:

a. mechanized vegetation removal and grubbing/land clearing;
b. the placement and the extraction of the proposed construction mats;
c. the placement of any material into standing water within WUSWC;
d. the placement of fill into Bordering and Isolated Vegetated Wetlands;
e. the extraction of temporary fill from any WUSWC;
f. The removal and placement of any material or substance from or into WUSWC for purposes of restoration which is required in this Certification

The compliance monitor(s) are not required to be present for any work:

g. taking place upon the surface of construction mats after their initial placement;
h. taking place in areas that are not WUSWC

In addition to the above, the compliance monitor(s) shall conduct a thorough inspection of the site within 24 hours of any rainfall which equals or exceeds 0.5 inches within 24 hours (as measured from the nearest applicable station on the NOAA "Daily Summaries Map", see https://www.ncei.noaa.gov/maps/daily-summaries/) or at least once every calendar week during active construction in the absence of a threshold rainfall event as outlined above.

While performing these duties the compliance monitor(s) shall confirm that all relevant Conditions of this Certification are being complied with at all times whilst they are present.

While on site, the compliance monitor(s) shall sufficiently document any and all observed noncompliance with any of the Conditions of this Certification. The compliance monitor(s) shall submit such electronic documentation to: Mary.Grover@mass.gov. This electronic documentation shall be in the form of a concise written report which adequately describes the noncompliant activities and/or conditions and cites the Condition(s) which have been violated and shall always be accompanied by the submittal of digital photographs, which shall clearly and adequately show the nature and extent of noncompliant activities and/or conditions and support the written report. This electronic documentation shall be submitted as such noncompliance is occurring and/or is first noted by the compliance monitor(s). If, in unusual circumstances, this is not physically possible, then the compliance monitor(s) shall submit electronic documentation within no more than four (4) hours of the initial observance of the noncompliant activity and/or condition. Within this same time period, the compliance monitor(s) shall also report the noncompliant activities and/or conditions via telephone to each of the following Department staff: Mary Grover at 617-352-9918. Failure to comply with this Condition would constitute a violation of this Certification and could result in enforcement actions taken by the Department. Failure of any compliance monitor to fulfill these duties in compliance with this Condition is grounds for a potential enforcement action

against the permittee. The permittee, its employees, agents, successors, and assigns shall not impede the compliance monitor(s) in the performance of their duties under this Certification. Any change in staffing of the compliance monitor(s) must be approved by the Department per Condition #11 of this Certification.

Provision of Bordering and Isolated Vegetated Wetland Compensatory Restoration Area(s)

19. At least ten (10) business days prior to the initiation of construction, the permittee shall nominate a wetland scientist(s) in writing, who shall be subject to acceptance in writing by the Department. Nominated wetland scientist(s) shall have at least five (5) years of experience in developing restoration plans for BVW and IVW alteration per 314 CMR 9.06(2) and 310 CMR 10.55(4)(b)1. through 7., inclusive. The Department maintains the right to approve or deny the nominee based upon the individual's level of experience as it relates to the successful construction and completion of BVW and IVW restoration areas. Any change in staffing of the wetland scientist(s) must be approved by the Department per Condition #11 of this Certification.
20. The permittee shall mitigate *in situ* for all approved fill, dredging, and placement of dredge spoil, either permanent or temporary, within BVW and IVW at a ratio of at least 1:1 per the requirements of 314 CMR 9.06(2). This restoration shall be referred to collectively in this Certification as the "BVW and IVW Restoration Areas". The "BVW and IVW Restoration Areas" shall be restored under the supervision and direction of the wetland scientist(s) per the methodology described in the plan(s) of record listed in the "Findings" section of this Certification, and specifically (hereinafter the "BVW and IVW Restoration Plan") "Western Regional Office, Bureau of Water Resources, Wetlands Program Restoration Plan in Response to Information Request Letter Data Required for Proposed Bordering Vegetated Wetland Restoration/Replication Area(s) Per Massachusetts Inland Wetland Replication Guidelines (MassDEP 2002) and 310 CMR 10.55(2)(b)1. Through 7. And 314 CMR 9.06(2)," dated August 18, 2023. Any deviation from the methodology approved by this Condition of the Certification must be requested in writing and approved by the Department per Condition #11 of this Certification. The Department reserves the right to modify the aforementioned "BVW and IVW Restoration Plan" and any other plan(s) necessary in order to meet the requirements of 314 CMR 9.00, including 314 CMR 9.06(2).
21. As shown on the plan(s) of record, temporary construction mats shall be used in BVW W1 and IVWs W2 and W3 to facilitate access to the areas of work.
22. When excavating soils from within Bordering or Isolated Wetlands in order to replace pipe segments within W2, the permittee shall stockpile all excavated soils outside of BVW, IVW and Land Under Water. Each soil layer (e.g., topsoil, subsoil) shall be stockpiled separately and shall not be intermixed. Upon completion of the pipe replacement, soil layers shall be replaced in the correct order (e.g., subsoil at the bottom, topsoil at the surface).
23. All exposed soils within the "BVW and IVW Restoration Areas" shall be seeded with New England Wetland Plant's Wetmix or an equivalent seed mix approved by the Department.
24. Failure to maintain an appropriate standard of care in the installation or post-installation components of required "BVW and IVW Restoration Areas", at any time, including but not limited to planting at inappropriate times of year, failure to reach appropriate subsurface hydrology, failure to restore or replicate suitable substrate conditions, failure to implement

standard horticultural practices (such as irrigation, fertilization, disease and pest control), failure to maintain erosion and sedimentation controls, failure to adequately control nonindigenous invasive species, and the loss of plantings of a sufficient number to impair the success of "BVW and IVW Restoration Areas" may be deemed noncompliance with this Certification at the sole discretion of the Department, unless identified in writing to the Department by the wetland scientist(s), or the permittee within five (5) business days of discovery. Any such written notification must include a "corrective plan of action", which shall be implemented by the permittee according to a schedule and conditions established in writing by the Department. The Department maintains the right to take enforcement action per 314 CMR 9.11 for any such noncompliance, in addition to its right to require adherence to the several Conditions of this Certification.

25. The Department hereby approves the "Proposed Hydrophytic Plant Community" specified in the "BVW and IVW Restoration Plan" with species acceptable to the Department. Per Condition #11 of this Certification, any modification of species, ratios, or seeding techniques must be requested by the permittee in writing to the Department and to the Natural Heritage and Endangered Species Program of the Massachusetts Division of Fisheries and Wildlife (NHESP-MassDFW); and approved in writing by the Department and NHESP-MassDFW prior to use. Additional applications of the approved seed mix shall be used when appropriate to maintain optimum surficial coverage of vegetation, until such time as the "BVW and IVW Restoration Areas" have been fully stabilized and are functioning as BVW and IVW, as determined by the wetland scientist(s) per Condition #26 of this Certification.
26. The wetland scientist(s) approved by the Department, or their approved designee shall monitor the status of the "BVW and IVW Restoration Areas" in calendar years 2024 and 2025, and then until such time as the "BVW and IVW Restoration Areas" functions in accordance with 314 CMR 9.06(2), as established by data collected during monitoring. The Department reserves the right to require additional annual monitoring. Monitoring shall include, at a minimum, the collection of all data required in pages 1 **and** 2 of "Wetland Determination Data Form – Northcentral and Northeast Region" [as found within US Army Corps of Engineers. 2012. *Regional Supplement to the Corps of Engineers Wetland Delineation Manual: Northcentral and Northeast Region*, ed. J. S. Wakeley, R. W. Lichvar, and C. V. Noble. ERDC/EL TR-12-1. Vicksburg, MS: U.S. Army Engineer Research and Development Center (Version 2.0)]. All vascular plants within the "BVW and IVW Restoration Areas" shall be identified to the species level. Scientific nomenclature shall follow *The Vascular Plants of Massachusetts: A County Checklist-First Revision*, by Melissa Dow Cullina, Bryan Connolly, Bruce Sorrie and Paul Somers (Massachusetts Natural Heritage & Endangered Species Program, Massachusetts Division of Fish and Wildlife, 2011), or an equivalent acceptable to the Department (as established in writing). At least three (3) "Wetland Determination Data Forms" shall be completed for three (3) distinct "Observation Plots" within the "BVW and IVW Restorations Areas," one (1) within each wetland system (W1, W2, and W3). Sampling shall take place at least once in each growing season in the years specified in this Condition. During each sampling event digital color photographs shall be taken of each of the three (3) separate Observation Plots within the "BVW and IVW Restoration Areas." All data collected during each of the years specified in this Condition shall be submitted in a written report entitled "BVW and IVW Restoration Areas Monitoring Report-1515 Granville Road, Westfield, Massachusetts". A draft copy

shall be submitted to the Department on or before November 30th of each year specified by this Condition. A final copy shall be sent to the Department within thirty (30) calendar days of the receipt of draft comments by the Department, if any.

27. Based upon the data collected during sampling events, the wetland scientist(s), or the Department upon its own discretionary initiative, shall render a conclusion within each report required by Condition #26, as to the success of the "BVW and IVW Restoration Areas" in terms of 314 CMR 9.06(2). If, at the end of the second growing season, the wetland scientist(s), or the Department upon its own discretionary initiative, render a conclusion that the "BVW and IVW Restoration Areas" have failed the standards specified at 314 CMR 9.06(2), said wetland scientist(s) shall prepare and submit a written "**corrective plan of action**" no later than the end of that calendar year to the Department for approval. The approved "corrective plan of action" shall be implemented the next growing season under the supervision of a wetland scientist approved by the Department and shall be monitored via the requirements specified in the several Conditions of this Certification.

Prohibitions and Mitigation for Activities in Land Under Water

28. All work upon or within Land Under Water and below the High Water Mark allowed per this Certification shall be accomplished by reference to the plan(s) of record, as modified by the several Conditions of this Certification, if any.
29. This Certification specifically prohibits the use of stone riprap, or any other *off-site* product or substance, from permanent emplacement below the High Water Mark of any Land Under Water at the Site. All stabilization and restoration of Land Under Water ("lake", "pond", "reservoir", "river", "stream", or "creek") shall be completed per the methodology described in the plan(s) of record listed in the "Findings" section of this Certification, and specifically (hereinafter the "LUW Restoration Plan") "Western Regional Office, Bureau of Water Resources, Wetlands Program Restoration Plan for Superseding Orders of Conditions and/or Water Quality Certification Applications Data Required for Proposed Bank (Inland) and Land Under Water Bodies and Waterways/Land Under Water Restoration Areas Per 310 CMR 10.54(4); 310 CMR 10.56(4); 310 CMR 10.60(3); 310 CMR 9.06(2) and *Massachusetts Wildlife Habitat Protection Guidance for Inland Wetlands* (MassDEP 2006)," dated August 18, 2023, unless some other methodology is proposed by the permittee in writing and approved by the Department per Condition #11 of this Certification.
30. The use of geotextiles below the High Water Mark [as defined at 314 CMR 9.02] and within Land Under Water associated with the unnamed intermittent stream (IS1) is prohibited.

Appeal Rights

Certain persons shall have a right to request an adjudicatory hearing concerning certifications by the Department when an application is required:

a. The applicant or property owner;
b. Any person aggrieved by this certification who has submitted written comments during the public comment period;

c. Any ten (10) citizens of the Commonwealth pursuant to MGL c. 30A where a group member has submitted written comments during the public comment period; or
d. Any governmental body or private organization with a mandate to protect the environment that has submitted written comments during the public comment period.

Any person aggrieved, any ten (10) citizens of the Commonwealth, or a governmental body or private organization with a mandate to protect the environment may appeal without having submitted written comments during the public comment period only when the claim is based on new substantive issues arising from material changes to the scope or impact of the activity and not apparent at the time of public notice. To request an adjudicatory hearing pursuant to MGL c. 30A, § 10, a Notice of Claim to an Adjudicatory Hearing must be made in writing, provided that the request is made by certified mail or hand delivery to the Department, with the appropriate filing fee specified within 310 CMR 4.10 along with a Departmental Action Fee Transmittal Form within twenty-one (21) days from the date of issuance of this Certificate, and addressed to:

Massachusetts Department of Environmental Protection
Case Administrator
One Winter Street, 2nd Floor
Boston, MA 02108

A copy of the request shall at the same time be sent by certified mail or hand delivery to the issuing office of the Wetlands and Waterways Program at:

Massachusetts Department of Environmental Protection
Springfield State Office Building
436 Dwight Street
Springfield, MA 01103

A Notice of Claim for Adjudicatory Hearing shall comply with the Department's Rules for Adjudicatory Proceedings, 310 CMR 1.01(6), and shall contain the following information pursuant to 310 CMR 4.10(3):

a. The §401 Certification Authorization Number and DEP Wetlands Protection Act File Number;
b. The complete name of the applicant and address of the project;
c. The complete name, address, and facsimile and telephone numbers of the party filing the request, and, if represented by counsel or other representative, the name, facsimile and telephone numbers, and address of the attorney;
d. If claiming to be a party aggrieved, the specific facts that demonstrate that the party satisfies the definition of "aggrieved person" found at 314 CMR 9.02;
e. A clear and concise statement that an adjudicatory hearing is being requested;
f. A clear and concise statement of (1) the facts which are grounds for the proceedings, (2) the objections to this Certificate, including specifically the

manner in which it is alleged to be inconsistent with the Department's Water Quality Regulations, 314 CMR 9.00, and (3) the relief sought through the adjudicatory hearing, including specifically the changes desired in the final written Certification; and

g. A statement that a copy of the request has been sent by certified mail or hand delivery to the applicant, the owner (if different from the applicant), the conservation commission of the city or town where the activity will occur, the Massachusetts Department of Conservation and Recreation (when the Certificate concerns projects in Areas of Critical Environmental Concern), the public or private water supplier where the project is located (when the certificate concerns projects in Outstanding Resource Waters), and any other entity with responsibility for the resource where the project is located.

The hearing request along with a Departmental Action Fee Transmittal Form and a valid check or money order payable to the Commonwealth of Massachusetts in the amount of one hundred dollars ($100) must be mailed to:

Commonwealth of Massachusetts
Department of Environmental Protection
Commonwealth Master Lockbox
Post Office Box 4062
Boston, MA 02211

The request will be dismissed if the filing fee is not paid, unless the appellant is exempt or granted a waiver. The filing fee is not required if the appellant is a city or town (or municipal agency), county, or district of the Commonwealth of Massachusetts, or a municipal housing authority. The Department may waive the adjudicatory-hearing filing fee pursuant to 310 CMR 4.06(2) for a person who shows that paying the fee will create an undue financial hardship. A person seeking a waiver must file an affidavit setting forth the facts believed to support the claim of undue financial hardship together with the hearing request as provided above.

If you have further questions regarding this Certification, please contact Mary Grover at 1-617-352-9918 or Mary.Grover@mass.gov.

Sincerely,

Michael McHugh
Acting Chief, Division of Wetlands and Waterways

ISSUED ELECTRONICALLY ONLY

ec: Westfield Conservation Commission
Anna.Meassick@cityofwestfield.org

AECOM
Kate.Schassler@AECOM.com

Paul Maniccia, Supervisor
Regulatory Division, Permits and Enforcement Branch A
United States Department of the Army
New England District, Corps of Engineers
Paul.M.Maniccia@usace.army.mil

Alexandra Echandi, Endangered Species Review Biologist
Natural Heritage and Endangered Species Program of the
Massachusetts Division of Fisheries and Wildlife
1 Rabbit Hill Road
Westborough, MA 01581
Alexandra.Echandi@mass.gov

USACE GP 2 and 6

GP 2. MAINTENANCE (Authorities: §10 and §404)

Repair, rehabilitation, or replacement of any previously authorized[1], currently serviceable structure, or fill, or of any currently serviceable structure or fill authorized by 33 CFR 330.3 (activities occurring before certain dates), provided that the structure or fill is not to be put to uses differing from those uses specified or contemplated for it in the original permit or the most recently authorized modification. Minor deviations in the structure's configuration or filled area, including those due to changes in materials, construction technique requirements of other regulatory agencies, or current construction codes or safety standards that are necessary to make the repair, rehabilitation, or replacement are authorized. This GP also authorizes temporary structures, fills, and work, including the use of temporary mats, necessary to conduct the activities above. Maintenance dredging and beach nourishment are not eligible under GP 2 (see GP 7). Stream crossing modifications (including sliplining), replacements or extensions are not eligible under GP 2 (see GPs 6, 17, 23). *See GP 25 Emergency Situations for expedited review of emergency activities.*

Not authorized under GP 2 (IP required): (a) Permanent impacts in >1 acre in non-tidal waters and/or wetlands; or (b) Permanent impacts >1/2 acre in tidal waters; >1000 SF in saltmarsh, mud flats, riffle and pool complexes, or non-tidal vegetated shallows; or >100 SF in tidal vegetated shallows; or (c) Temporary impacts >1 acre in tidal waters; >5000 SF in saltmarsh, mud flats, riffle and pool complexes, or non-tidal vegetated shallows; or >1000 SF in vegetated shallows; (d) New stream channelization or stream relocation projects (e.g., those in response to storm or flood events).

Self-Verification Eligible

Maintenance activities that meet all of the following terms:

1. In non-tidal waters, the combined permanent and temporary impacts extending beyond the original footprint are ≤5,000 SF[2] and not located in vegetated shallows or riffle and pool complexes.

2. In tidal waters, the combined permanent and temporary impacts extending beyond the original footprint are ≤5,000 SF, ≤1,000 SF in mudflats and/or natural rocky habitat, and not located in saltmarsh and tidal vegetated shallows.

3. Minor deviations in the repair, rehabilitation, or replacement of previously authorized, currently serviceable structures or fills.

4. Bulkhead replacement in tidal and non-tidal waters via installation of new bulkhead within 18 inches of the existing bulkhead and associated backfill.

5. Drawdown of an impoundment for dam/levee repair provided it does not exceed 18 months and one growing season (April through September).

Pre-Construction Notification Required

1. Discharges associated with removal of accumulated sediments and debris in the vicinity of existing structures, including intake and outfall structures and associated canals.

2. The removal of sediment outside the immediate vicinity of existing structures (e.g., bridges, culverted road crossings, water intake structures, etc.) that is ≥200 linear feet. This activity is limited to the minimum necessary to restore the waterway in the vicinity of the structure to the approximate dimensions existing when the structure was built.

3. Dam and flood control or levee repair, rehabilitation, or replacement involves:
   a. A change in the flood elevation or permanent water surface elevation of the impoundment; or
   b. Drawdown of impoundment for construction exceeding one growing season (see SV eligible #5);
   c. Any modification that changes the character, scope, or size of the original fill design; or
   d. Does not meet SV eligible 1-7.

4. Installation of steel piles, including steel sheet piles, that cannot be done in the dry and where NOAA-ESA listed species are mapped as present.

[1] Some maintenance activities may not be subject to regulation under Section 404 of the CWA in accordance with 33 CFR 323.4(a)(2). Per 33 CFR 330.3, Vested dates are: a) Work performed and structures installed before December 18, 1968 (Section 10); and b) Fill placed before July 25, 1975 (Section 404).
[2] This excludes dam projects that may require a temporary drawdown with impacts >5,000 SF in non-tidal waters. Instead, the drawdown shall comply with SV #5 to be eligible under Self-Verification.

6. Any stream channel modification is limited to the minimum necessary for the repair, rehabilitation, or replacement of the structure or fill; such modifications, including the removal of material from the stream channel, must be immediately adjacent to the project or within the boundaries of the structure or fill. 7. Work to previously approved tide gates not affecting upstream tidal resource areas.	5. Activities located in the Connecticut River or Merrimack River, unless they are completed in the dry or when the tide is waterward of the work area. 6. Activities on USACE properties & USACE-controlled easements. 7. Activities that do not require an IP. Activities that do not require a PCN or an IP may be SV eligible.
Notes: 1. This authorizes the repair, rehabilitation, or replacement of any previously authorized structure or fill that does not qualify for the CWA §404(f) exemption for maintenance. See 33 CFR 323.4(a)(2). Prior USACE permits may have included authorization to maintain the activity, in which case authorization under this GP is not necessary. 2. See GC 22 for information on temporary construction mats.	

GP 6. UTILITY LINES, OIL OR NATURAL GAS PIPELINES, OUTFALL OR INTAKE STRUCTURES, AND APPURTENANT FEATURES (Authorities: §10 & §404)

Activities required for: (a) The construction, maintenance, repair or removal of utility lines, oil or natural gas pipelines[1], outfall or intake structures[2], and appurtenant features including the associated excavation, backfill, or bedding for these structures. (b) The construction, maintenance, or expansion of substations and other appurtenant facilities associated with a utility line, oil or natural gas pipeline, and outfall or intake structure in non-tidal waters of the U.S.; and (c) The construction and maintenance of foundations for overhead utility line towers, poles, and anchors in tidal and non-tidal waters of the U.S., provided the foundations are the minimum size necessary and separate footings for each tower leg (rather than a larger single pad) are used where feasible. This GP authorizes the construction of access roads to facilitate construction of the above activities provided the activity, in combination with all other activities included in one single and complete project, does not exceed the thresholds identified below (IP required). Access roads used solely for construction of the utility line must be removed upon completion of the work. This GP also authorizes temporary structures, fills, and work, including the use of temporary mats, necessary to conduct the activities above.[3]

Not authorized under GP 6 (IP required): (a) Permanent impacts for any single and complete project that are >1 acre in non-tidal waters of the U.S.; >½ acre in tidal waters; >1000 SF in saltmarsh, mud flats, riffle and pool complexes, or non-tidal vegetated shallows; or >100 SF in tidal vegetated shallows; (b) Temporary impacts in tidal waters that are >1 acre; >5000 SF in saltmarsh, mud flats, or riffle and pool complexes; or >1000 SF in vegetated shallows; (c) Stormwater treatment or detention systems, or subsurface sewage disposal systems in waters of the U.S.; or (d) New tide gates that do not meet SV criteria below.

Self-Verification Eligible	**Pre-Construction Notification Required**
1. In non-tidal waters, the combined permanent and temporary impacts are (a) ≤5,000 SF, and (b) not located in riffle and pool complexes and non-tidal vegetated shallows. 2. In tidal waters, the combined permanent and temporary impacts are (a) ≤5,000 SF, (b) ≤1,000 SF in mudflats and/or natural rocky habitat, and (c), not located in saltmarsh and tidal vegetated shallows. 3. Intake structures that are dry hydrants used exclusively for firefighting activities with no stream impoundments. 4. New tide gates on outfall structures for pipes conveying stormwater and/or industrial NPDES-permitted discharges from waters that are not waters of the U.S.	1. New outfall and/or intake structures. 2. Unconfined work or silt producing activities in streams with diadromous fish. 3. Submarine cables, conduits, or pipelines that occur in, over or under navigable waters of the U.S. 4. Stream channelization, relocation, impoundment, or loss of streambed occurs. 5. The activity is placed within and runs parallel to or along a streambed within waters of the U.S. 6. There is a permanent change in preconstruction contours in waters of the U.S. 7. Installation of utility lines or gas/oil pipelines using trench excavation where material is temporarily sidecast into waters of the U.S. for >3 months. Applicants must demonstrate how the material would not be dispersed by currents or other forces. 8. Activities that are not SV eligible and do not require an IP.

[1] See the definitions of a “utility line” and “oil or natural gas pipeline” in Section VII.

[2] Outfall structures must be in compliance with regulations issued under the National Pollutant Discharge Elimination System Program (Section 402 of the Clean Water Act).

[3] Temporary impacts shall comply with all GCs, including GC 32 Utility Line Installation and Removal.

SECTION IV. GENERAL CONDITIONS:

To qualify for GP authorization, the applicant must comply with the following general conditions, as applicable, in addition to authorization-specific conditions imposed by the division or district engineer.

1. Other Permits
2. Federal Jurisdictional Boundaries
3. Single and Complete Projects
4. Use of Multiple General Permits
5. Suitable Material
6. Tribal Rights & Burial Sites
7. Avoidance, Minimization, and Compensatory Mitigation
8. Water Quality & Stormwater Management
9. Coastal Zone Management
10. Federal Threatened and Endangered Species
11. Essential Fish Habitat
12. National Lands
13. Wild and Scenic Rivers
14. Historic Properties
15. USACE Property and Federal Projects (§408)
16. Navigation
17. Permit/Authorization Letter On-Site
18. Storage of Seasonal Structures
19. Pile Driving and Pile Removal in Navigable Waters
20. Time of Year Restrictions
21. Heavy Equipment in Wetlands
22. Temporary Fill & Construction Mats
23. Restoration of Wetland Areas
24. Bank Stabilization
25. Soil Erosion and Sediment Controls
26. Aquatic Life Movements and Management of Water Flows
27. Spawning, Breeding, and Migratory Areas
28. Vernal Pools
29. Invasive Species
30. Fills Within 100-Year Floodplains
31. Stream Work and Crossings & Wetland Crossings
32. Utility Line Installation and Removal
33. Water Supply Intakes
34. Coral Reefs
35. Blasting
36. Inspections
37. Maintenance
38. Property Rights
39. Transfer of GP Verifications
40. Modification, Suspension, and Revocation
41. Special Conditions
42. False or Incomplete Information
43. Abandonment
44. Enforcement Cases
45. Previously Authorized Activities
46. Duration of Authorization

1. Other Permits. Authorization under these GPs does not obviate the need for the permittee to obtain other Federal, State, or local permits, approvals, or authorizations required by law. Permittees are responsible for obtaining all required permits, approvals, or authorizations. Activities that are not regulated by the State, but subject to USACE jurisdiction, may still be eligible for these GPs.

2. Federal Jurisdictional Boundaries.
a. Applicability of these GPs shall be evaluated with reference to Federal jurisdictional boundaries. Activities shall be evaluated with reference to "waters of the U.S." under the CWA (33 CFR 328) and "navigable waters of the U.S." under §10 of the Rivers and Harbors Act of 1899 (33 CFR 329). Permittees are responsible for ensuring that the boundaries used satisfy the Federal criteria defined at 33 CFR 328-329. These sections prescribe the policy, practice, and procedures to be used in determining the extent of the USACE jurisdiction. Note: Waters of the U.S. includes all waters pursuant to 33 CFR 328.3(a), and adjacent wetlands as the term is defined in 33 CFR 328.3(c).
b. Wetlands shall be delineated in accordance with the USACE Wetlands Delineation Manual and the most recent Northcentral/Northeast Regional Supplement. Wetland delineation and jurisdiction information is located at: www.nae.usace.army.mil/missions/regulatory/jurisdiction-and-wetlands and maps are located at www.nae.usace.army.mil/missions/regulatory/state-general-permits/massachusetts-general-permit.
c. Vegetated shallows shall be delineated when present on the project site. Vegetated shallow survey guidance and maps are located at: www.nae.usace.army.mil/missions/regulatory/state-general-permits/massachusetts-general-permit.
d. Natural rocky habitats shall be delineated when present on the project site. The definition of natural rocky habitats is in Section VII of the MA GP. Natural rocky habitat survey guidance and maps are located at: www.nae.usace.army.mil/ missions/regulatory/state-general-permits/massachusetts-general-permit.

3. Single and Complete Projects. The MA GP shall not be used for piecemeal work and shall be applied to single and complete projects. The term "single and complete project" is defined at 33 CFR 330.2(i) as the total project proposed or accomplished by one owner/developer or partnership or other association of owners/developers.
a. For non-linear projects, a single and complete project must have independent utility. Portions of a multi-phase project that depend upon other phases of the project do not have independent utility. Phases of a project that would be constructed, even if the other phases were not built, can be considered as separate single and complete projects with independent utility.
b. Unless USACE determines the activity has independent utility, all components of a single project and/or all planned phases of a multi-phased project (e.g., subdivisions should include all work such as roads, utilities, and lot development) shall be evaluated as one single and complete project.
c. For linear projects such as power lines or pipelines with multiple crossings, a "single and complete project" is all crossings of a single water of the U.S. (i.e., single waterbody) at a specific location. For linear projects crossing a single waterbody several times at separate and distant locations, each crossing is considered a single and complete project. However, individual channels in a braided stream or river, or individual arms of a large, irregularly shaped wetland or lake, etc., are not separate waterbodies, and crossings of such features cannot be considered separately. If any crossing requires a PCN review or an individual permit review, then the entire linear project shall be reviewed as one project under PCN or the individual permit procedures.

4. Use of Multiple General Permits. The use of more than one GP for a single and complete project is prohibited, except when the acreage loss of waters of the U.S. authorized by the GPs does not exceed the acreage limit of the GPs with the highest specified acreage limit. For example, if a road crossing over waters is constructed under GP 23, with an associated utility line

crossing authorized by GP 6, if the maximum acreage loss of waters of the U.S. for the total project is ≥1 acre it shall be evaluated as an IP.

5. Suitable Material & Discharge of Pollutants. No activity may use unsuitable material (e.g., trash, debris, car bodies, asphalt, etc.). All activities involving any discharge into waters of the U.S. authorized under these GPs shall be consistent with applicable water quality standards, effluent limitations, standards of performance, prohibitions, and pretreatment standards and management practices established pursuant to the CWA (33 U.S.C. 1251), and applicable state and local laws. If applicable water quality standards, limitations, etc., are revised or modified during the term of this GP, the authorized work shall be modified to conform with these standards within six months from the effective date of such revision or modification, or within a longer period of time deemed reasonable by the District Engineer in consultation with the Regional Administrator of the EPA. Unless monitoring data indicates otherwise, applicants may presume that their activity complies with state water quality standards provided they are in compliance with the Section 401 WQC (Applicable only to the Section 404 activity).

6. Tribal Rights & Burial Sites

a. For all SV and PCN applications, prospective permittees shall follow the guidance set forth in Appendix A, Guidance for NHPA Section 106 Compliance in Massachusetts.

b. No activity or its operation may impair reserved tribal rights, including, but not limited to, reserved water rights and treaty fishing and hunting rights.

c. Many tribal resources are not listed on the National Register of Historic Places (NRHP) and may require identification and evaluation in collaboration with the identifying tribe and by qualified professionals. The Tribal Historic Preservation Officer (THPO) and State Historic Preservation Officer (SHPO) may be able to assist with locating information on:

i. Previously identified tribal resources; and
ii. Areas with potential for the presence of tribal resources.

d. Discovery of Previously Unknown Remains and Artifacts: If any previously unidentified human remains, cultural deposits, or artifacts are discovered while accomplishing the activity authorized by this permit, you must immediately notify the USACE of what you have found, and to the maximum extent practicable, cease work and avoid construction activities that may affect the remains and artifacts until the required coordination has been completed. The USACE will initiate the appropriate the Federal, Tribal, and state coordination required to determine if the items or remains are eligible for listing in the NRHP and warrant a recovery effort or can be avoided.

e. Burial Sites: Burial sites, marked or unmarked, are subject to state law (Massachusetts Unmarked Burial Law). Native American burial sites on federal or tribal land are subject to the provisions of Native American Graves Protection and Repatriation Act (NAGPRA). Regulated activities may not result in disturbance or removal of human remains until disposition of the remains has been determined by the appropriate authority under these laws, and the work is authorized by the USACE. Regulated activities which result in an inadvertent discovery of human remains must stop immediately, and the USACE, as well as the appropriate state and tribal authority, must be notified. Regulated work at inadvertent discovery sites requires compliance with state law or NAGPRA, as appropriate, prior to re-starting work.

7. Avoidance, Minimization, and Compensatory Mitigation. To qualify under the MA GP, activities must comply with Section V Mitigation Standards and the following as applicable:

a. Avoid and Minimize: Activities must be designed and constructed to avoid and minimize adverse effects, both temporary and permanent, to waters of the U.S. to the maximum extent practicable at the project site. Avoidance and minimization are required to the extent necessary to ensure that the adverse effects to the aquatic environment (both area and function) are no more than minimal.

b. Compensatory mitigation for unavoidable impacts to waters of the U.S., including direct, indirect, secondary, and temporal loss, will generally be required for permanent impacts that exceed the thresholds identified in Section V, and may be required for temporary impacts, to offset unavoidable impacts which remain after all appropriate and practicable avoidance and minimization has been achieved and to ensure that the adverse effects to the aquatic environment are no more than minimal. Proactive restoration projects or temporary impact work with no secondary effects may generally be excluded from this requirement.
c. Mitigation proposals shall follow the guidelines found in the Compensatory Mitigation for Losses of Aquatic Resources; Final Rule April 10, 2008; 33 CFR 332. Prospective permittees may purchase mitigation credits in-lieu of permittee-responsible mitigation as compensation for unavoidable impacts to waters of the U.S. in the Commonwealth of Massachusetts.

8. Water Quality & Stormwater Management. The 401 WQC requirement applies to all activities listed under GPs 1-25, unless determined otherwise by MassDEP. Permittees shall also satisfy stormwater management requirements in Massachusetts.

a. General 401 WQC: MassDEP issued a WQC on April 21, 2023 which conditionally certifies all activities in GPs 1 – 24 eligible for SV and PCN so long as the activity is described in 314 CMR 9.03, and is not an activity described in 314 CMR 9.04, and so long as the activity meets all other requirements, terms and conditions of the WQC. The MassDEP WQC also conditionally certifies activities described in GP 25 so long as the activity meets all other conditions of the WQC. Emergency projects described in GP 25 must obtain an emergency certification or otherwise be authorized pursuant to 310 CMR 10.06, qualify under a Severe Weather Emergency Declaration pursuant to 310 CMR 10.06(8) issued by the MassDEP, or meet the requirements of 9.12(2) or (3) in order to be certified under the WQC. Prospective permittees may refer to the following link to determine if their activity is eligible: https://www.nae.usace.army.mil/Missions/Regulatory/State-General-Permits/ Massachusetts-General-Permit/. The General 401 WQC is located here, and it provides detailed information regarding what activities are certified and the conditions for certification. Activities listed in 314 CMR 9.03 that are not exempt from the Wetland Protection Act must have a valid Final Order of Conditions (OOC) or Final Restoration Order of Conditions pursuant to 310 CMR 10.00 to be eligible under the General 401 WQC.
b. Individual 401 WQC: Prospective permittees shall contact MassDEP and apply for an individual 401 WQC if their activity does not qualify for a General 401 WQC as outlined above. MassDEP may issue, waive, or deny the individual 401 WQC on a case-by-case basis. All activities listed in 314 CMR 9.04 must obtain an individual 401 WQC from MassDEP to be eligible under these GPs. When an Individual 401 WQC is required for *PCN activities*, the prospective permittee shall submit their Individual 401 WQC application concurrently to MassDEP and USACE to comply with 40 CFR 121.
c. The prospective permittee is responsible for determining the appropriate 401 WQC requirement and submitting this information to the USACE at the time of their PCN application or when completing their SVN. Prospective permittees that are unsure of whether their activity has been certified should contact MassDEP for a determination.
d. As applicable, all activities shall be compliant with the Massachusetts Stormwater Handbook. The Stormwater Handbook can be accessed on the NAE Regulatory website here: https://www.nae.usace.army.mil/Missions/Regulatory/State-General-Permits/Massachusetts-General-Permit/.
e. No work requiring authorization under Section 404 of the CWA may be performed unless (1) the prospective permittee qualifies for coverage under the April 21, 2023 General 401 WQC, (2) the prospective permittee receives an individual Section 401 WQC from the MassDEP, or (3) the MassDEP waives individual Section 401 WQC.

9. Coastal Zone Management. The permittee must obtain CZM consistency concurrence when an activity is located in the coastal zone in order to be eligible under the MA GP. This requirement

shall be satisfied by acquiring one of the following from the Massachusetts Office of Coastal Zone Management (MA CZM):

a. General CZM Federal Consistency Concurrence (General Concurrence): MA CZM has granted General Concurrence for all SV and PCN activities for GPs 1-25. The prospective permittee must obtain all applicable permits and approvals before construction of the authorized activity begins (e.g., before work begins on site). For SVs, General Concurrence is automatically granted and no further action is required from the prospective permittee. For PCNs, the USACE will coordinate with MA CZM to acquire General Concurrence as part of the PCN application review.
b. Individual CZM Federal Consistency Concurrence (Individual Concurrence): In certain cases, MA CZM may elevate any GP activity 1-25 and require Individual Concurrence. The prospective permittee must contact MA CZM and follow the procedures to obtain Individual Concurrence as determined appropriate by MA CZM.
c. Permittees must obtain CZM consistency concurrence as outlined above before commencing work authorized under these GPs.

10. Federal Threatened and Endangered Species

a. No activity is authorized under any GP which is likely to directly or indirectly jeopardize the continued existence of a threatened or endangered species or a species proposed for such designation, as identified under the Federal Endangered Species Act (ESA), or which will directly or indirectly destroy or adversely modify designated critical habitat or critical habitat proposed for such designation. No activity is authorized under any GP which "may affect" a listed species or critical habitat, unless ESA section 7 consultation addressing the consequences of the proposed activity on listed species or critical habitat has been completed. See 50 CFR 402.02 for the definition of "effects of the action" for the purposes of ESA section 7 consultation, as well as 50 CFR 402.17, which provides further explanation under ESA section 7 regarding "activities that are reasonably certain to occur" and "consequences caused by the proposed action."
b. Other Federal agencies should follow their own procedures for complying with the requirements of the ESA (see 33 CFR 330.4(f)(1)). If a PCN is required for the proposed activity, the Federal permittee must provide USACE with the appropriate documentation to demonstrate compliance with those requirements. The USACE will verify that the appropriate documentation has been submitted. If the appropriate documentation has not been submitted, additional ESA section 7 consultation may be necessary for the activity and the respective federal agency would be responsible for fulfilling its obligation under section 7 of the ESA.
c. USFWS ESA-Listed Species: Non-federal applicants shall use the USFWS website, Information for Planning and Consultation (IPAC), to determine if their activity is located within the ESA-listed species range. The IPAC website can be accessed on the NAE Regulatory website: https://www. nae.usace.army.mil/Missions/Regulatory/State-General-Permits/Massachusetts-General-Permit/. Applicants shall ensure they have an updated, valid species list before construction begins. This may require applicants to update their species list in IPAC before the start of construction. Note: Applicants should refer to the NAE Regulatory Website at the link above to determine if they have been designated as a non-federal representative. Applicants shall complete Section 7 consultation according to the guidance document located on the NAE Regulatory Website. After completing the Rangewide Determination Key and reaching the outcome "may affect, not likely to adversely affect", you may be required to wait up to 15 days before that outcome is final and compliance under Section 7 of the ESA is fulfilled.

i. *Self-Verification Criteria*: The activity is SV-eligible if:
   1) The activity is not located within the ESA-listed species range;
   2) Another (lead) Federal agency has completed Section 7 consultation; or
   3) The activity is located within the ESA-listed species range ***and*** USACE has designated the applicant as a non-federal representative under 50 CFR 402.08 of the ESA for all

species within the project's action area. As the non-federal representative, the applicant shall complete consultation through IPAC and reach the outcome of "no effect" or "not likely to adversely affect".

ii. *Pre-Construction Notification Criteria*: The activity requires a PCN if:

1) The activity is located within the ESA-listed species range ***and*** USACE has NOT designated the applicant as a non-federal representative under 50 CFR 402.08 of the ESA for all species within the project's action area;

2) The activity is located in designated or proposed critical habitat; or

3) The activity is located within the ESA-listed species range and completion of the IPAC determination key has resulted in the outcome of "may affect" or "may affect, likely to adversely affect"; or

4) A PCN is required elsewhere in this document.

d. NOAA-Listed Species: Non-federal applicants shall refer to the Section 7 Mapper for federally listed species to determine if any species are mapped as present. When NOAA-listed species are present, the applicant shall generate a species report through the mapper and submit this document as part of their PCN or SVN submission. The NOAA Fisheries' Section 7 Mapper can be accessed here on the NAE Regulatory website here: https://www.nae.usace.army.mil/Missions/Regulatory/State-General-Permits/Massachusetts-General-Permit/.

e. Authorization of an activity by an GP does not authorize the "take" of a threatened or endangered species as defined under the ESA. In the absence of separate authorization (e.g., an ESA Section 10 Permit, a Biological Opinion with "incidental take" provisions, etc.) from the FWS or the NMFS, the Endangered Species Act prohibits any person subject to the jurisdiction of the United States to take a listed species, where "take" means to harass, harm, pursue, hunt, shoot, wound, kill, trap, capture, or collect, or to attempt to engage in any such conduct. The word "harm" in the definition of "take" means an act which actually kills or injures wildlife. Such an act may include significant habitat modification or degradation where it actually kills or injures wildlife by significantly impairing essential behavioral patterns, including breeding, feeding or sheltering.

11. Essential Fish Habitat (EFH).

a. SV eligible activities have been determined to result in no more than minimal adverse effects, provided the permittee complies with all terms and conditions of the MA GP as appliable to the activity. NMFS has granted General Concurrence [50 CFR 600.920(g)] for all SV eligible activities. These activities do not require project specific EFH consultation.

b. For PCN required activities, the applicant is required to describe and identify potential adverse effects to EFH and should refer to NOAA Fisheries' EFH Mapper (http://www.fisheries.noaa.gov/resource/map/essential-fish-habitat-mapper) and Omnibus Essential Fish Habitat Amendment 2 Volume 2: EFH and HAPC Designation Alternatives and Environmental Impacts (https://www.habitat.noaa.gov/application/efhmapper/oa2_efh_hapc.pdf). If an activity is located within EFH, the PCN application must contain:

1. A description of the action located in EFH.
2. An analysis of the potential adverse effects of the action on EFH and the managed Species.
3. Conclusions regarding the effects of the action on EFH.
4. Proposed mitigation, if applicable (refer to the mitigation thresholds located in Section V).

c. Federal agencies shall follow their own procedures for complying with the EFH requirements of the Magnuson-Stevens Fishery Conservation and Management Act. For activities requiring a PCN, the applicant is responsible for furnishing documentation that demonstrates consultation for EFH has been completed.

d. For PCN activities, no work may commence until EFH consultation as required by the Magnuson-Stevens Act has been completed.

12. National Lands. Activities that impinge upon the value of any National Wildlife Refuge, National Forest, National Marine Sanctuary, National Historic Landmarks or any other area administered by the National Park Service, U. S. Fish and Wildlife Service (USFWS) or U.S. Forest Service (USFS) require a PCN or Individual Permit. Federal land managers seeking authorization for activities located in the above listed National Lands may proceed under SV, unless a PCN is required elsewhere in this document.

13. Wild and Scenic Rivers. The following activities in designated river or study river segments in the National Wild and Scenic River (WSR) System require a PCN unless the Federal agency with direct management responsibility for such river, in Massachusetts this is generally the National Park Service, has determined in writing to the proponent that the proposed work will not adversely affect the WSR designation or study status:

a. Activities that occur in WSR segments, in and 0.25 miles up or downstream of WSR segments, or in tributaries within 0.25 miles of WSR segments;
b. Activities that occur in wetlands within 0.25 miles of WSR segments;
c. Activities that have the potential to alter free-flowing characteristics in WSR segments.

No GP activity may occur in a component of the National Wild and Scenic River System, or in a river officially designated by Congress as a "study river" for possible inclusion in the system while the river is in an official study status, unless the appropriate Federal agency with direct management responsibility for such river, has determined in writing that the proposed activity will not adversely affect the Wild and Scenic River designation or study status.

As of May 10, 2023, affected rivers in Massachusetts include: the Taunton River (40 miles), Sudbury River (16.6 miles), Assabet River (4.4 miles), Concord River (8 miles), Nashua River (27 miles), Squannacook River (16.3 miles), Nissitissit River (4.7 miles), and the Westfield River, including West Branch, Middle Branch, Gendale Brook, East Branch, Drowned Land Brook, Center Brook, Windsor Jambs Brook, Shaker Mill Brook, Depot Brook, Savery Brook, Watson Brook, Center Pond Brook (78.1 miles). The most up to date list of designated and study rivers and their descriptions may be obtained from the appropriate Federal land management agency responsible for the designated Wild and Scenic River or study river (e.g., National Park Service, U.S. Forest Service, Bureau of Land Management, U.S. Fish and Wildlife Service). Information on these rivers is also available at: http://www.rivers.gov/.

14. Historic Properties

a. For all SV and PCN applications, permittees shall follow the guidance set forth in Appendix A, Guidance for NHPA Section 106 Compliance in Massachusetts.

b. No undertaking authorized by these GPs shall cause effects[1] (defined in 36 CFR Part 800 and 33 CFR Part 325, Appendix C, and its Interim Guidance) on properties listed on, determined to be eligible for listing on, or potentially eligible for listing on the National Register of Historic Places (NRHP)[2], including previously unknown historic properties within the permit area, unless the USACE or another Federal action agency has satisfied the consultation requirements of Section 106 of the National Historic Preservation Act (Section 106). If another Federal agency is determined the lead federal agency for compliance with Section 106, applicant must obtain the appropriate documentation and provide this information to the USACE to demonstrate compliance with Section 106. The applicant shall not begin the activity until the USACE notifies them in writing that the documentation provided satisfies Section 106 requirements.

[1] Effect means the alteration to the characteristics of a historic property qualifying it for inclusion in or eligibility for the National Register of Historic Properties.

[2] See the NAE Regulatory website, National Register of Historic Places link here: https://www.nae.usace.army.mil/Missions/Regulatory/State-General-Permits/Massachusetts-General-Permit/.

c. Many historic properties are not listed on the NRHP and may require identification and evaluation by qualified historic preservation and/or archaeological consultants. The State Historic Preservation Officer (SHPO), Massachusetts Board of Underwater Archaeological Resources (BUAR), local historical societies, certified local governments, general public, and NRHP may also be able to assist with locating information on:

i. Previously identified historic properties; and
ii. Areas with potential for the presence of historic properties.

d. Discovery of Previously Unknown Remains and Artifacts: If any previously unidentified human remains, cultural deposits, or artifacts are discovered while accomplishing the activity authorized by this permit, you must immediately notify the USACE of what you have found, and to the maximum extent practicable, cease work and avoid construction activities that may affect the remains and artifacts until the required coordination has been completed. The USACE will initiate the Federal, State and tribal coordination required to determine if the items or remains warrant a recovery effort and/or if the site is eligible for listing in the National Register of Historic Places.

e. Section 110k: Prospective permittees should be aware that section 110k of the NHPA (54 U.S.C. § 306113) prevents the USACE from granting a permit or other assistance to an applicant who, with intent to avoid the requirements of Section 106, has intentionally significantly adversely effected a historic property to which the permit would relate, or having legal power to prevent it, allowed such significant adverse effect to occur, unless the USACE, after consultation with the Advisory Council on Historic Preservation (ACHP), determines that circumstances justify granting such assistance despite the adverse effect created or permitted by the applicant. If circumstances justify granting the assistance, the USACE is required to notify the ACHP and provide documentation specifying the circumstances, the degree of damage to the integrity of any historic properties effected, and proposed mitigation. This documentation must include any views obtained from the applicant, SHPO/THPO, appropriate Indian tribes if the undertaking occurs on or effects historic properties on tribal lands or effects properties of interest to those tribes, and other parties known to have a legitimate interest in the impacts to the permitted activity on historic properties.

f. Underwater Archaeological Resources: Under Massachusetts General Law Ch. 6, s.'s 179-180, and Ch. 91, s. 63, the BUAR has statutory jurisdiction within state waters and is the sole trustee of the Commonwealth's underwater heritage, charged with the responsibility of encouraging the discovery and reporting, as well as the preservation and protection, of underwater archaeological resources. Underwater archaeological resources located within the waters of the Commonwealth of Massachusetts are property of the Commonwealth, which holds title to these resources and retains regulatory authority over their use. Under Massachusetts General Law, no person, organization or corporation may "remove, displace, damage, or destroy" any underwater archaeological resources located within the Commonwealth's submerged lands except through consultation with the BUAR and in conformity with the permits it issues. https://www.mass.gov/orgs/board-of-underwater-archaeological-resources.

15. USACE Property and Federal Projects. (33 USC §408)

a. USACE projects and property can be found at: https://www.nae.usace.army.mil/Missions/Civil-Works/.

b. In addition to any authorization under these GPs, prospective permittee shall contact the USACE Real Estate Division (https://www.nae.usace.army.mil/Missions/Real-Estate-Division/) at (978) 318-8585 for work occurring on or potentially affecting USACE properties and/or USACE-controlled easements. Work may not commence on USACE properties and/or USACE-controlled easements until they have received any required USACE real estate documents evidencing site-specific permission to work.

c. Any proposed temporary or permanent occupation or alteration of a Federal project (including, but not limited to, a levee, dike, floodwall, channel, anchorage, breakwater, seawall, bulkhead, jetty, wharf, pier, or other work built or maintained but not necessarily owned by the United States),

is not eligible for SV and requires a PCN. This includes all proposed structures and work in, over, or under a USACE federal navigation project (FNP) or in the FNP's buffer zone. The buffer zone is an area that extends from the horizontal limits of the FNP to a distance of three times the FNP's authorized depth. The activity also requires review and approval by the USACE pursuant to 33 USC 408 (Section 408 Permission). The prospective permittee may reach out to the POCs located here: https://www.nae.usace.army.mil/ Missions/Section-408/.
d. Any structure or work constructed in a FNP or its buffer zone shall be subject to removal at the owner's expense prior to any future USACE dredging or the performance of periodic hydrographic surveys.
e. Where a Section 408 permission is required, written verification for the PCN will not be issued prior to the decision on the Section 408 permission request.

16. Navigation
a. No activity may cause more than a minimal adverse effect on navigation.
b. Any safety lights and signals prescribed by the U.S. Coast Guard, must be installed, and maintained at the permittee's expense on authorized facilities in navigable waters of the U.S.
c. There shall be no unreasonable interference with navigation by the existence or use of the activity authorized herein, and no attempt shall be made by the permittee to prevent the full and free use by the public of all navigable waters at or adjacent to the activity authorized herein.
d. The permittee understands and agrees that if future U.S. operations require the removal, relocation, or other alteration of the structure or work herein authorized, or if, in the opinion of the Secretary of the Army or his authorized representative, said structure or work shall cause unreasonable obstruction to the free navigation of the navigable waters, the permittee will be required, upon due notice from USACE, to remove, relocate, or alter the structural work or obstructions caused thereby, without expense to the U.S. No claim shall be made against the U.S. on account of any such removal or alteration.

17. Permit/Authorization Letter On-Site. For PCNs, the permittee shall ensure that a copy of these GPs and the accompanying authorization letter are at the work site (and the project office) whenever work is being performed, and that all personnel with operational control of the site ensure that all appropriate personnel performing work are fully aware of its terms and conditions. The entire permit authorization shall be made a part of any and all contracts and sub-contracts for work that affects areas of USACE jurisdiction at the site of the work authorized by these GPs. This shall be achieved by including the entire permit authorization in the specifications for work. The term "entire permit authorization" means these GPs, including GCs and the authorization letter (including its drawings, plans, appendices, special conditions, and other attachments), and any permit modifications. If the authorization letter is issued after the construction specifications, but before receipt of bids or quotes, the entire permit authorization shall be included as an addendum to the specifications. If the authorization letter is issued after receipt of bids or quotes, the entire permit authorization shall be included in the contract or sub-contract as a change order. Although the permittee may assign various aspects of the work to different contractors or sub-contractors, all contractors and sub-contractors shall be obligated by contract to comply with all environmental protection provisions contained within the entire authorization letter, and no contract or sub-contract shall require or allow unauthorized work in areas of USACE jurisdiction. For SVs, the permittee shall ensure that a complete and signed copy of the SVN is present on site during construction and is made available for review at any time by USACE and other Federal, State, & Local regulatory agencies. A complete and signed copy of the SVN must be submitted to USACE Regulatory within 30 days of initiating construction of the authorized activity, unless stated otherwise in the applicable GP.

18. Storage of Seasonal Structures. Coastal structures such as pier sections, floats, etc., that

are removed from the waterway for a portion of the year (often referred to as seasonal structures) shall be stored in an upland location, located above MHW and not in tidal wetlands. These seasonal structures may be stored on the fixed, pile-supported portion of the structure that is seaward of MHW. This is intended to prevent structures from being stored on the marsh substrate and the substrate seaward of MHW.

19. Pile Driving and Pile Removal in Navigable Waters.
a. Derelict, degraded or abandoned piles and sheet piles in navigable waters of the U.S., except for those inside existing work footprints for piers, must be completely removed, cut and/or driven to 3 feet below the substrate to prevent interference with navigation, and existing creosote piles that are affected by project activities shall be completely removed if practicable. In areas of fine-grained substrates, piles must be removed by the direct, vibratory or clamshell pull method[1] to minimize sedimentation and turbidity impacts and prevent interference with navigation from cut piles. Removed piles shall be disposed of in an upland location landward of MHW or OHW and not in wetlands, tidal wetlands or mudflats.
b. A PCN is required for the installation or removal of structures with jetting techniques.
c. A PCN is required for the installation of >12 inch-diameter piles of any material type or steel piles of any size in tidal waters, unless they are installed in the dry. If piles are not installed in the dry:
i. Impact pile driving shall commence with an initial set of three strikes by the hammer at 40% energy, followed by a one-minute wait period, then two subsequent 3-strike sets at 40% energy, with one minute waiting periods, before initiating continuous impact driving.
ii. Vibratory pile driving shall be initiated for 15 seconds at reduced energy followed by a one-minute waiting period. This sequence of 15 seconds of reduced energy driving, one-minute waiting period shall be repeated two more times, followed immediately by pile-driving at full rate and energy.
iii. In addition to using a soft start at the beginning of the workday for pile driving as described in 19c(i-ii), a soft start must also be used at any time following a cessation of pile driving for a period of 30 minutes or longer.
d. Bubble curtains may be used to reduce sound pressure levels during vibratory or impact hammer pile driving.

20. Time-of-Year (TOY) Restrictions. Activities that include in-water work must comply with the TOY Restrictions below to be SV eligible, otherwise a PCN is required. PCN submittals shall contain written justification for deviation from the TOY Restrictions. The term “in-water work” does not include conditions where the work site is “in-the-dry” (e.g., intertidal areas exposed at low tide). The term “in-the-dry” includes work contained within a cofferdam so long as the cofferdam is installed and subsequently removed outside the TOY Restriction. The TOY restrictions stated in Appendix B of the MA DMF Technical Report TR-47[2] can apply instead for activities in tidal waters if (1) TOYs are provided for a specific waterbody where the activity is proposed and (2) the TOYs are less restrictive than below. The activity must also not require a PCN elsewhere in this document to be SV eligible.

[1] Direct Pull: Each piling is wrapped with a choker cable or chain that is attached at the top to a crane. The crane then pulls the piling directly upward, removing the piling from the sediment. Vibratory Pull: The vibratory hammer is a large mechanical device (5-16 tons) that is suspended from a crane by a cable. The vibrating hammer loosens the piling while the crane pulls up. Clamshell Pull: This can remove intact, broken or damaged pilings. The clamshell bucket is a hinged steel apparatus that operates like a set of steel jaws. The bucket is lowered from a crane and the jaws grasp the piling stub as the crane pulls up. The size of the clamshell bucket is minimized to reduce turbidity during piling removal.
[2] The MA DMF Technical Report TR-47: https://www.nae.usace.army.mil/Missions/Regulatory/State-General-Permits/Massachusetts-General-Permit/

	TOY Restriction (No work)
Non-tidal Waters	Defer to TR-47
Tidal Waters	January 15 – November 15

Alternate work windows proposed under a PCN will generally be coordinated with the USFWS and NMFS. Resulting written verifications may include species-specific work allowed windows.

21. Heavy Equipment in Wetlands. Operating heavy equipment (drill rigs, fixed cranes, etc.) within wetlands shall be minimized, and such equipment shall not be stored, maintained, or repaired in wetlands, to the maximum extent practicable. Where construction requires heavy equipment operation in wetlands, the equipment shall:

i. Have low ground pressure (typically ≤3 psi);

ii. Be placed on swamp/construction/timber mats (herein referred to as "construction mats" or "mats") that are adequate to support the equipment in such a way as to minimize disturbance of wetland soil and vegetation. See GC 22 for information on the placement of construction mats; or

iii. Be operated on adequately dry or frozen wetlands such that shear pressure does not cause subsidence of the wetlands immediately beneath the equipment and upheaval of adjacent wetlands. Construction mats are to be placed in the wetland from the upland or from equipment positioned on mats if working within a wetland. Dragging construction mats into position is prohibited. Other support structures that are capable of safely supporting equipment may be used with written USACE authorization.

22. Temporary Fill, Work & Construction Mats.

a. *Construction mats in non-tidal waters*: Temporary construction mats shall be in place ≤1 year *and* for one growing season or less to be SV eligible. A PCN is required if construction mats are in place >1 year *or* for more than one growing season. Construction mats can be placed in an area of any size in non-tidal waters. The activity may occur in segments to ensure the requirements for SV above are met, otherwise a PCN is required.

b. *Construction mats in tidal waters*: Temporary construction mats placed in an area <5,000 SF in tidal waters are SV eligible, provided those mats are in place ≤6 months. Temporary construction mats placed in an area ≥5,000 SF or in place >6 months in tidal waters require a PCN.

c. *Management of construction mats:* At a minimum, construction mats shall be managed in accordance with the following construction mat best management practices (BMPs):

1. Mats shall be in good condition to ensure proper installation, use, and removal.
2. As feasible, mats shall be placed in a location that will minimize the amount of mats needed for the wetland crossing(s).
3. Inspect mats prior to their re-use and remove any plant debris. Mats are to be thoroughly cleaned before re-use to prevent the spread of invasive plant species.
4. Impacts to wetland areas shall be minimized during installation, use, and removal of the mats.
5. Adequate erosion & sediment controls shall be installed at approaches to mats to promote a smooth transition to, and minimize sediment tracking onto, the mats.
6. In most cases, mats should be placed along the travel area so that the individual boards are resting perpendicular to the direction of traffic. No gaps should exist between mats. Place mats far enough on either side of the resource area to rest on firm ground.

d. A PCN is required for temporary fills in place >2 years. All temporary fills and disturbed soils shall be stabilized to prevent the material from eroding into waters of the U.S. where it is not authorized. Work shall include phased or staged development to ensure only areas under active development are exposed and to allow for stabilization practices as soon as practicable. Temporary fill must be placed in a manner that will prevent it from being eroded by expected high flows.

e. Activities that require unconfined temporary fill and are authorized for discharge into waters of the U.S. shall consist of material that minimizes effects to water quality.
f. Appropriate measures must be taken to maintain normal downstream flows and minimize flooding to the maximum extent practicable when temporary structures, work, and discharges of dredged or fill material, including cofferdams, are necessary for construction activities, access fills, or dewatering of construction sites. Materials shall be placed in a location and manner that does not adversely impact surface or subsurface water flow into or out of the wetland. Temporary fill authorized for discharge into wetlands shall be placed on geotextile fabric or other appropriate material laid on the pre-construction wetland grade where practicable to minimize impacts and to facilitate restoration to the original grade. Construction mats are excluded from this requirement.
g. Construction debris and deteriorated materials shall not be located in waters of the U.S.
h. Temporary fills, construction mats, and corduroy roads shall be entirely removed as soon as they are no longer needed to construct the authorized activity and the disturbed areas be restored to pre-construction contours and conditions.
i. Construction equipment, such as temporary barges in tidal waters, shall provide clearance above the substrate to avoid grounding onto the substrate during all tides.

23. Restoration of Wetland Areas.
a. Upon completion of construction, all disturbed wetland areas shall be stabilized with a wetland seed mix or plant plugs containing only plant species native to New England, and be appropriate for site conditions, including salinity and frequency of inundation, and shall not contain any species listed in the "Invasive and Other Unacceptable Plant Species" Appendix K of the New England District "Compensatory Mitigation Standard Operating Procedures" found at https://www.nae.usace.army.mil/Missions/Regulatory/Mitigation.aspx.
b. The introduction or spread of invasive plant species in disturbed areas shall be prevented and controlled. Equipment shall be thoroughly cleaned before and after project construction to prevent the spread of invasive species. This includes, but is not limited to, tire treads and construction mats.
c. In areas of authorized temporary disturbance, if trees are cut in USACE jurisdiction, they shall be cut at or above ground level and not uprooted in order to prevent disruption of any kind to the wetland soil structure and to allow stump sprouts to revegetate the work area, unless otherwise authorized.
d. Wetland areas where permanent disturbance is not authorized shall be restored to their original condition and elevation, which under no circumstances shall be higher than the pre-construction elevation. Original condition means careful protection and/or removal of existing soil and vegetation, and replacement back to the original location such that the original soil layering and vegetation schemes are approximately the same, unless otherwise authorized.

24. Bank Stabilization.
a. Projects involving construction or reconstruction/maintenance of bank stabilization within USACE jurisdiction shall be designed to minimize environmental effects, effects to neighboring properties, scour, conversion of natural shoreline to hard armoring, etc. to the maximum extent practicable.
b. Projects involving the construction of new bank stabilization within USACE jurisdiction shall use bioengineering techniques and natural materials in the project design to the maximum extent practicable. Use of hard structures shall be eliminated or minimized unless the prospective permittee can demonstrate that use of bioengineering techniques is not practicable due to site conditions.
c. Where possible, bank stabilization projects shall optimize the natural function of the shoreline, including self-sustaining stability to attenuate flood flows, fishery, wildlife habitat and water quality protection, while protecting upland infrastructure from storm events that can cause erosion as well as impacts to public and private property.
d. No material shall be placed in excess of the minimum needed for erosion protection.
e. No material shall be placed in a manner that will be eroded by normal or expected high flows (properly anchored native trees and treetops may be used in low energy areas).

f. Native plants appropriate for current site conditions, including salinity, must be used for bioengineering or vegetative bank stabilization.
g. The activity must be properly maintained, which may require repairing it after severe storms or erosion events.

25. Soil Erosion and Sediment Controls.
a. Appropriate soil erosion and sediment controls[1] (hereinafter referred to as "controls") must installed prior to earth disturbance and maintained in effective operating condition during construction. Biodegradable wildlife friendly erosion controls should be used whenever practicable to minimize effects to water quality.
b. Activities in streams (rivers, streams, brooks, etc.) and tidal waters that are capable of producing sedimentation or turbidity should be done during periods of low-flow or no-flow, when the stream or tide is waterward of the work area. Controls may also be used to obtain dry work conditions (e.g., coffer dam, turbidity curtain). The prospective permittee must demonstrate in the project plans where the controls are proposed and how these controls would avoid and/or minimize turbidity or sedimentation.
c. A PCN is required for controls that encroach: i) >25% of the stream width measured from OHW in non-tidal diadromous streams from March 15 to June 30; or ii) >25% of the waterway width measured from MHW in tidal waters from Feb. 1 to June 30, or >50% of the waterway width measured from MHW in tidal waters from July 1 to Jan. 14. This is to protect upstream fish passage. Proponents must also maintain downstream fish passage throughout the project.
d. No dewatering shall occur with direct discharge to waters or wetlands. Excess water in isolated work areas shall be pumped or directed to a sedimentation basin, tank or other dewatering structures in an upland area adequately separated from waters or wetlands. Suspended solids shall be removed prior to discharge back into waters or wetlands from these dewatering structures. All discharge points back into waters and wetlands shall use appropriate energy dissipaters and erosion and sedimentation control BMPs.
e. Temporary controls shall be removed upon completion of work, but not until all exposed soil and other fills, as well as any work waterward of OHW or the HTL, are permanently stabilized at the earliest practicable date. Sediment and debris collected by these devices shall be removed and placed at an upland location in a manner that will prevent its later erosion into a waterway or wetland. Controls may be left in place if they are biodegradable and flows and aquatic life movements are not disrupted.

26. Aquatic Life Movements and Management of Water Flows.
a. No activity may substantially disrupt the necessary life cycle movements of those species of aquatic life indigenous to the waterbody, including those species that normally migrate through the area, unless the activity's primary purpose is to impound water. All permanent and temporary crossings of waterbodies and wetlands shall be:
   i. Suitably spanned, bridged, culverted, or otherwise designed and constructed to maintain low flows to sustain the movement of those aquatic species; and
   ii. Properly aligned and constructed to prevent bank erosion or streambed scour both adjacent to and inside the crossing.

[1] Appropriate soil erosion, sediment and turbidity controls include cofferdams, bypass pumping around barriers immediately up and downstream of the work footprint (i.e., dam and pump), installation of sediment control barriers (i.e., silt fence, vegetated filter strips, geotextile silt fences, filter tubes, erosion control mixes, hay bales or other devices) downhill of all exposed areas, stream fords, retention of existing vegetated buffers, application of temporary mulching during construction, phased construction, and permanent seeding and stabilization, etc.

b. To avoid adverse impacts on aquatic organisms, the low flow channel/thalweg shall remain unobstructed during periods of low flow, except when necessary to perform the authorized work.
c. For work in tidal waters, in-stream controls (e.g., cofferdams) should be installed in such a way as to not obstruct fish passage.
d. Riprap and other stream bed materials shall be installed in a manner that avoids organism entrapment in rock voids or water displaced to subterranean flow with crushed stone and riprap.
e. To the maximum extent practicable, the preconstruction course, condition, capacity, and location of open waters must be maintained for each activity, including stream channelization, storm water management activities, and temporary and permanent road crossings, except as provided below. The activity must be constructed to withstand expected high flows. The activity shall not restrict or impede the passage of normal or high flows unless the primary purpose of the activity is to impound water or manage high flows. The activity may alter the pre-construction course, condition, capacity, and location of open waters if it benefits the aquatic environment (e.g., stream restoration or relocation activities).

27. Spawning, Breeding, and Migratory Areas.
a. Activities in spawning areas during spawning seasons must be avoided to the maximum extent practicable. Activities that result in the physical destruction (e.g., through excavation, fill, or downstream smothering by substantial turbidity) of an important spawning area are not authorized under these GPs.
b. Activities in waters of the U.S. that serve as breeding areas for migratory birds must be avoided to the maximum extent practicable.
c. The applicant is responsible for obtaining any "take" permits required under the USFWS's regulations governing compliance with the Migratory Bird Treaty Act or the Bald and Golden Eagle Protection Act. The applicant should contact the appropriate local office of the USFWS to determine if such "take" permits are required for a particular activity.
d. Information on spawning habitat for species managed under the Magnuson-Stevens Fishery Conservation and Management Act (i.e., EFH for spawning adults) can be obtained from NAE Regulatory website, Essential Fish Habitat section, at: https://www.nae.usace.army.mil/Missions/Regulatory/State-General-Permits/Massachusetts-General-Permit/.
e. Information regarding diadromous fish habitat can be obtained from the following DMF website at: https://www.mass.gov/info-details/massgis-data-diadromous-fish.

28. Vernal Pools.
a. A PCN is required if a discharge of dredged or fill material is proposed within a vernal pool depression that is also a water of the U.S.
b. Vernal pools must be identified on the plans that show aquatic resource delineations.
c. Adverse impacts to vernal pools shall be avoided & minimized to the maximum extent practicable.

29. Invasive Species.
a. The introduction, spread or the increased risk of invasion of invasive plant or animal species on the project site, into new or disturbed areas, or areas adjacent to the project site caused by the site work shall be avoided. Construction mats shall be thoroughly cleaned before reuse to avoid spread of invasive species.
b. Unless otherwise directed by USACE, all applications for PCN non-tidal projects proposing fill in USACE jurisdiction shall include an Invasive Species Control Plan. Additional information can be found at: https://www.nae.usace.army.mil/Missions/Regulatory/Invasive-Species/, https://www.nae.usace.army.mil/Missions/Regulatory/Mitigation/.

30. Fills Within 100-Year Floodplains. The activity shall comply with applicable Federal Emergency Management Agency (FEMA) approved, Massachusetts Emergency Management

Agency (MEMA) approved and/or local floodplain management requirements. Applicants should contact FEMA and/or MEMA regarding floodplain management requirements.

31. Stream Work and Crossings & Wetland Crossings.
a. When feasible, all temporary and permanent crossings of waterbodies and wetlands (hereinafter referred to as "crossings") shall conform to the "Massachusetts River and Stream Crossing Standards" located at: https://www.mass.gov/doc/massachusetts-river-and-stream-crossing-standards/download or https://www.nae.usace.army.mil/Missions/Regulatory/State-General-Permits/Massachusetts-General-Permit/. Projects that do not conform to these guidelines shall be reviewed under PCN or IP procedures.
b. Crossings shall be suitably culverted, bridged, or otherwise designed to withstand and to prevent the restriction of high flows, to maintain existing low flows, maintain water quality, and not obstruct the movement of aquatic life indigenous to the waterbody beyond the duration of construction.
c. Crossings shall be installed in such a manner as to preserve hydraulic capacity and flow, sediment transport, and organism passage at its present level, between the wetlands on either side of the road. The applicant shall take necessary measures to correct any wetland damage resulting from deficiencies in hydraulic capacity, sediment transport and organism passage.
d. Stream crossings shall utilize a natural mixed grain-size streambed material composition that matches upstream and downstream substrates to create a stable streambed. Substrate should function appropriately during normal and high flows without washing out. If natural streambed material is not utilized, a PCN is required.
e. Activities involving open trench excavation in flowing waters require a PCN. Work should not occur in flowing waters (requires using management techniques such as temporary flume pipes, culverts, cofferdams, etc.). Normal flows should be maintained within the stream boundary's confines when practicable. Projects utilizing these management techniques must meet all applicable terms and conditions of the GP, including the GCs in Section IV.

32. Utility Line Installation and Removal
a. Subsurface utility lines must be installed at a sufficient depth to avoid damage from anchors, dredging, etc., and to prevent exposure from erosion and stream adjustment.
b. When utility lines are installed via horizontal directional drilling, a frac-out contingency plan shall be present on site for the duration of construction. As necessary, the applicant shall immediately contain, control, recover, and remove drilling fluids released into the environment.
c. Abandoned or inactive utility lines must be removed and faulty lines (e.g., leaking hazardous substances, petroleum products, etc.) must be removed or repaired. A written verification from the USACE is required if they are to remain in place, e.g., to protect sensitive areas or ensure safety.
d. Utility lines shall not adversely alter existing hydrology, and trenches cannot be constructed or backfilled in such a manner as to drain waters of the U.S. (e.g., backfilling with extensive gravel layers, creating a French drain effect). In wetland areas, structures such as ditch plugs, cut-off walls, clay blocks, bentonite, or other suitable material shall be used within utility trenches to ensure that the trench through which the utility line is installed does not drain waters of the U.S. including wetlands.
e. Stockpiling of tree debris, to the extent where it has the effect of fill material, shall not occur in waters of the U.S. Tree debris shall be removed from waters of the U.S. and placed in uplands without causing additional disturbance to aquatic resources. Failure to meet this condition could change the bottom elevation of the wetland and be considered a discharge of fill material, and depending on the area of alteration, may require a PCN or IP.

33. Water Supply Intakes. No activity may occur in the proximity of a public water supply intake, except where the activity is for the repair or improvement of public water supply intake structures or adjacent bank stabilization.

34. Coral Reefs. Impacts to coral reefs are not authorized under these GPs. Coral reefs consist of the skeletal deposit, usually of calcareous or silicaceous materials, produced by the vital activities of anthozoan polyps or other invertebrate organisms present in growing portions of the reef.

35. Blasting. Blasting in waters of the U.S. associated with work such as dredging, trenching, pile installation, etc. is not authorized under these GPs.

36. Inspections. The permittee shall allow USACE to make periodic inspections at any time deemed necessary to ensure that the work is being or has been performed in accordance with the terms and conditions of this permit. To facilitate these inspections, for activities requiring a PCN, the permittee shall complete and return the Certificate of Compliance when it is provided with a PCN verification letter. For SV-eligible activities, the permittee shall complete and submit the SVN to USACE within 30 days of initiating project construction, at which point, USACE may opt to inspect the activity to verify compliance with the terms and conditions of the GP. Post-construction engineering drawings may be required by USACE for completed work. This includes post-dredging survey drawings for any dredging work.

37. Maintenance. The permittee shall maintain the activity authorized by these GPs in good condition and in conformance with the terms and conditions of this permit. Some maintenance activities may not be subject to federal regulation under Section 404 in accordance with 33 CFR 323.4(a)(2). This condition is not applicable to maintenance of dredging projects. Prospective permittees should contact USACE to inquire about maintenance of dredging projects, and its eligibility under these GPs. Maintenance dredging is subject to the review thresholds in GP #7 as well as any conditions included in a written USACE authorization. Maintenance dredging includes only those areas and depths previously authorized and dredged.

38. Property Rights. Per 33 CFR 320.4(g)(6), these GPs do not convey any property rights, either in real estate or material, or any exclusive privileges, nor do they authorize any injury to property or invasion of rights or any infringement of Federal, State, or local laws or regulations.

39. Transfer of GP Verifications. When the work authorized by these GPs is still in existence at the time the property is transferred, the terms and conditions of these GPs, including any special conditions, will continue to be binding on the entity or individual who received the GP authorizations, as well as the new owner(s) of the property. If the permittee sells the property associated with a GP authorization, the applicant may transfer the GP authorization to the new owner by submitting a letter to USACE to validate the transfer. A copy of the GP authorization letter must be attached to the letter, and the letter must include the following statement: “The terms and conditions of these general permits, including any special conditions, will continue to be binding on the new owner(s) of the property.” This letter shall be signed by both the seller and new property owner(s).

40. Modification, Suspension, and Revocation. These GPs and any individual authorization issued thereof may be either modified, suspended, or revoked in whole or in part pursuant to the policies and procedures of 33 CFR 325.7; and any such action shall not be the basis for any claim for damages against the U.S.

41. Special Conditions. The USACE may impose other special conditions on a project authorized pursuant to these GPs that are determined necessary to minimize adverse navigational and/or environmental effects or based on any other factor of the public interest. Failure to comply with all conditions of the authorization, including special conditions, constitutes a permit violation and may subject the applicant to criminal, civil, or administrative penalties or restoration.

42. False or Incomplete Information. If USACE makes a determination regarding the eligibility of a project under these GPs, and subsequently discovers that it has relied on false, incomplete, or inaccurate information provided by the applicant, the authorization will not be valid, and the U.S. Government may institute appropriate legal proceedings.

43. Abandonment. If the permittee decides to abandon the activity authorized under these GPs, unless such abandonment is merely the transfer of property to a third party, he/she/they may be required to restore the area to the satisfaction of USACE.

44. Enforcement cases. These GPs do not apply to any existing or proposed activity in USACE jurisdiction associated with an on-going USACE or EPA enforcement action, until such time as the enforcement action is resolved or USACE or EPA determines that the activity may proceed independently without compromising the enforcement action.

45. Previously Authorized Activities.

a. Completed projects that received prior authorization from USACE (SV or PCN), shall remain authorized in accordance with the original terms and conditions of those authorizations, including their terms, GCs, and any special conditions provided in a written verification.

b. Activities authorized pursuant to 33 CFR 330.3 (activities occurring before certain dates) are not affected by these GPs.

46. Duration of Authorization.

These GPs expire on June 1, 2028. Activities authorized under these GPs will remain authorized until the GPs expire, unless discretionary authority has been exercised on a case-by-case basis to modify, suspend, or revoke the authorization in accordance with 33 CFR 325.2(e)(2). Activities authorized under GPs 1-25 that have either commenced (i.e., are under construction) or are under contract to commence in reliance upon this authorization will have until June 1, 2029 to complete the work. If requested by USACE, the permittee shall furnish documentation that demonstrates the project was under construction or under contract to commence by June 1, 2028. If work is not completed before June 1, 2029, the permittee must contact USACE. The USACE may issue a new authorization provided the project meets the terms and conditions of the MA GPs in effect at the time. Activities completed under the SV or PCN authorizations of these GPs will continue to be authorized after their expiration date.

APPENDIX C

SPECIFICATION FOR 42” PRESTRESSED CONCRETE CYLINDER PIPE WITH RUBBER AND STEEL JOINT, SPRINGFIELD, MA, July 3, 1958

SPECIFICATION NO. WE-58-24-1

FOR 42" PRESTRESSED CONCRETE CYLINDER PIPE WITH RUBBER AND STEEL JOINT
BY-PASS CONDUIT, CONTRACT #4 Contract = 44
SPRINGFIELD, MASSACHUSETTS
BOGERT & CHILDS, CONSULTING ENGINEERS

SEE DRAWING D-2-630-42"

Nominal Pipe Diameter - inches	42	42
Approximate Footage - feet	556	2,367
Design Conditions:		
Class - psi	125	150
H-20 Truck Load (2 Passing - 3' c.c.)		
TRENCH Truck Load Using Marston's Formula		
W = 4400 Cd, Bd = 6.3		
Bedding Factor = 2		
Cylinder Gage - ASTM A 245-57T, Grade B	16 ga.	16 ga.
Cylinder Area - sq. in./ft.	0.718	0.718
Cylinder Test Pressure (25,000 psi) - psi	63	63
Wire Size - ASTM A 227-47	#6MBU	#6MBU
Wire Spacing - in. c.c.	0.685	0.570
Wire Area - sq. in./ft.	0.506	0.608
Pressure when compression in concrete is zero - psi	188	220
Resultant compression in concrete - psi	1,395	1,605
Resultant tension in wire - psi	117,300	113,100
Gross wrapping stress - psi	140,000	140,000
Dynamometer (1 wire) - lbs.	4,055	4,055
Minimum compressive strength of centrifugated concrete at time of wrapping - psi	3,800	4,400
f'_c (min 28 day) conc str., psi	6,000	6000
Core Thickness (including cylinder) - inches	2-5/8	2-5/8
Coating Thickness - inch	7/8	7/8
Joint Rings:		
Spigot Ring - special section x ~~5-1/2"~~ wide		
Bell Ring 1/4" x 5-1/2"		
Both zinc coated		
Joint Depth - inches	3-3/4	3-3/4
Creep - feet	0.03	0.03
Average Laid Length - feet	16.03	16.03
Calculation Data: C =	1.04	1.04
n =	6	6

APPROVED
SUBJECT TO CONTRACT REQUIREMENTS
BOGERT and CHILDS
CONSULTING ENGINEERS
BY: YKB 7/24/58

LOCK JOINT PIPE ~~CO.~~ EAST ORANGE, N. J.

COMPILED [illegible] CHECKED [illegible] APPROVED [illegible] DATE 7-3-58

SPECIFICATION NO. PE-58-42-1

FOR 42" PRESTRESSED CONCRETE EMBEDDED CYLINDER PIPE WITH RUBBER AND STEEL JOINT
BY-PASS CONDUIT - CONTRACT #44 .
SPRINGFIELD, MASSACHUSETTS
BOGERT & CHILDS, CONSULTING ENGINEERS

SEE DRAWING D-2-817-42" Sheet 1 & 2 Sheet 1 FOR (A) & Sheet 3 FOR (B)

Nominal Pipe Diameter - inches	42	42
Approximate Footage - feet	3,537	
	(A)	(B)
Design Conditions:		
Class - psi	175	175
H-20 Truck Load (2 Passing - 3' c.c.)		
Trench Load Using Marston's Formula		
W = 4400 Cd, Bd = 6.3		
Bedding Factor = 2		
Cylinder Gage - ASTM A 245-57T, Grade	16	16
Cylinder Area - sq. in./ft.	0.718	0.718
Cylinder Test Pressure (25,000 psi) - psi	67	67
Nominal Cylinder Diameter - inches	44-1/2	44-1/2
Wire Size - ASTM A 227-47	#6MBU	#6MBU
Wire Spacing - in. c.c.	0.519	0.519
Wire Area - sq. in./ft.	0.668	0.668
Pressure when compression in concrete is zero - psi	225	238
Resultant compression in concrete - psi	1,480	1,245
Resultant tension in wire - psi	105,400	109,700
Gross wrapping stress - psi	140,000	140,000
Dunamometer (1 wire) - lbs.	4,055	4,055
Minimum compressive strength of poured concrete at time of wrapping - psi	4,700	3,700
f'_c (28 day) conc str, psi	5700 AVG 5200 MIN	5700 AVG 5200 MIN
*Core Thickness - inches	3-5/8	3-1/2
Coating Thickness - inch	7/8	7/8
Joint Rings:		
Spigot Ring - special section x 5-1/2" wide		
Bell Ring 1/4" x 5-1/2"		
Both zinc coated		
Joint Depth - inches	3-3/4	3-3/4
Creep - feet	0.03	0.03
Average Laid Length - feet	16.03	16.03
Calculation Data: C =	1.14	1.36
n =	7	7

APPROVED
SUBJECT TO CONTRACT REQUIREMENTS
BOGERT and CHILDS
CONSULTING ENGINEERS
BY: JAS
DATE: 7/24/58

* Bevels & Pipe With Outlets To Have 3-1/2" Core. Short To Have 4-1/2" Core.

LOCK JOINT PIPE CO. EAST ORANGE, N. J.

COMPILED VDM CHECKED WGL. APPROVED MJP BAT DATE 7-3-58

SPECIFICATION NO. PE-58-42-2

FOR 42" PRESTRESSED CONCRETE EMBEDDED CYLINDER PIPE WITH RUBBER AND STEEL JOINT
BY-PASS CONDUIT - CONTRACT #44
SPRINGFIELD, MASSACHUSETTS
BOGERT & CHILDS, CONSULTING ENGINEERS

SEE DRAWING D-2-817-42" Sheet 2 & 3

Nominal Pipe Diameter - inches	42	42	42
Approximate Footage - feet	1,572	304	1,104
Design Conditions:			
Class - psi	200	225	250
H-20 Truck Load (2 Passing - 3' c.c.)			
Trench Load Using Marston's Formula			
W = 4400 Cd, Bd = 6.3			
Bedding Factor = 2			
Cylinder Gage - ASTM A 245-57T, Grade B	16	16	16
Cylinder Area - sq. in./ft.	0.718	0.718	0.718
Cylinder Test Pressure (25,000 psi) - psi	67	67	67
Nominal Cylinder Diameter - inches	44-1/2	44-1/2	44-1/2
Wire Size - ASTM A 227-47	#6MBU	#6MBU	1/4" MBU
Wire Spacing - in. c.c.	0.454	0.396	0.560
Wire Area - sq. in./ft.	0.763	0.875	1.051
Pressure when compression in concrete is zero - psi	263	290	312
Resultant compression in concrete - psi	1,360	1,475	1,270
Resultant tension in wire - psi	105,800	101,400	89,900
Gross wrapping stress - psi	140,000	140,000	127,000
Dynamometer (1 wire) - lbs.	4,055	4,055	6,235
Minimum compressive strength of poured concrete at time of wrapping - psi	4,200	4,700	4,500
f'c (@ 28 day) conc str, psi	5700 AVG 5200 MIN	5700 AVG 5200 MIN	5700 AVG 5200 MIN
*Core Thickness - inches	3-1/2	3-1/2	4-1/2
Coating Thickness - inch	7/8	7/8	7/8
Joint Rings:			
Spigot Ring - spedial section x 5-1/2" wide			
Bell Ring 1/4" x 5-1/2"			
Both zinc coated			
Joint Depth - inches	3-3/4	3-3/4	3-3/4
Creep - feet	0.03	0.03	0.03
Average Laid Length - feet	16.03	16.03	16.03
Calculation Data: C =	1.36	1.36	1.61
n =	7	7	7

APPROVED
SUBJECT TO CONTRACT REQUIREMENTS
BOGERT and CHILDS
CONSULTING ENGINEERS
BY: [signature]
DATE: 7/24/58

* Shorts To Have 4-1/2" Core.

LOCK JOINT PIPE CO. EAST ORANGE, N. J.

COMPILED [signature] CHECKED [signature] APPROVED [signature] DATE 7-3-58

Lock Joint Pipe Company
East Orange, New Jersey
JOH:ae 7-25-58
Sheet 1 of 3

SPRINGFIELD, MASSACHUSETTS
42" PRESTRESSED CONCRETE CYLINDER PIPE W/RUBBER & STEEL JOINT (SP-5)
42" PRESTRESSED CONCRETE EMBEDDED CYLINDER PIPE W/R&S JOINT (SP-12)
42" BY-PASS CONDUIT CONTRACT #44
OUR JOB NO. PE-58-42 (CLASS 250,225,200,175) SP-12
OUR JOB NO. WH-58-24 (CLASS 150, 125) SP-5

SUMMARY

Description	Average L.L.	Units	Total L.L.
CLASS 250 SP-12 PE-58-42			
Straights	16.03	44	705.32
w/4" Drilled Flange Outlet @ 10'-0" From Face Of Bell	16.03	1	16.03
w/6" Drilled Flange Outlet w/Flange x Flange 60° Blow-Off Bend @ 6'-0" From Face Of Bell	16.03	1	16.03
w/16" x 18" Manhole @ 2'-10-1/2" From Face Of Bell	16.03	2	32.06
w/24" Drilled Flange Outlet @ 7'-8" From Face Of Bell	16.03	1	16.03
Shorts:			
(6'-10" O.A.)	6.55	1	6.55
(4'-7-7/8" O.A.)	4.38	1	4.38
(12'-3-3/4" O.A.)	12.03	1	12.03
(7'-10-3/4" O.A.)	7.61	1	7.61
(5'-3-3/8" O.A.)	5.02	1	5.02
(3'-11-3/8" O.A.)	3.66	1	3.66
(10'-9-7/8" O.A.)	10.54	1	10.54
(7'-2" O.A.)	6.89	1	6.89
(11'-2-3/4" O.A.)	10.95	1	10.95
(12'-4-1/8" O.A.)	12.06	1	12.06
Bevels:			
1-3/4" Half	15.96	2	31.92
3-1/2" Full	15.88	9	142.92
Elbows:			
6°-45'	0.89	3	2.67
6°-15'	0.87	1	0.87
7°-05'	0.89	1	0.89
12°-45'	1.27	1	1.27
6°-30'	0.89	1	0.89
13°-00'	1.23	1	1.23
34°-45' w/0'-1-7/8" Spigot Extension	2.80	1	2.80
7°-45' w/2'-5-3/4" Bell Extension	3.39	1	3.39
Adapter:			
LJP x Steel Pipe (42" ID, 1/2"Plate (1'-1" O.A.)	1.08	1	1.08
	TOTAL	81	1,055.09
CLASS 225 SP-12 PE-58-42			
Straights	16.03	22	352.66
Short:			
(6'-5-3/4" O.A.)	6.20	1	6.20
Bevels:			
1-3/4" Half	15.96	2	31.92
	TOTAL	25	390.78

SPRINGFIELD, MASSACHUSETTS
42" (SP-5)
42" (SP-12)
CONTRACT #44
SUMMARY

Description	Average L.L.	Units	Total L.L.
CLASS 200 SP-12 PE-58-42			
Straights	16.03	70	1,122.10
w/16" x 18" Manhole @ 3'-0" From Face Of Bell	16.03	1	16.03
w/16" x 18" Manhole @ 13'-0" From Face Of Bell	16.03	1	16.03
Bevels:			
1-3/4" Half	15.96	4	63.84
3-1/2" Full	15.88	17	269.96
w/6" Drilled Flange Outlet w/Flg. x Flg. 60° B.O. Bend On Right, 60° Below Springline When Short Side On Right, @ 9'-6" From Face Of Bell	15.88	1	15.88
TOTAL		94	1,503.84
CLASS 175 SP-12 PE-58-42			
Straights	16.03	151	2,420.53
w/16" x 18" Manhole @ 3'-6" From Face Of Bell	16.03	2	32.06
w/16" x 18" Manhole @ 6'-8" From Face Of Bell	16.03	1	16.03
Shorts:			
(13'-7-1/2" O.A.)	13.34	1	13.34
(14'-8-7/8" O.A.)	14.46	1	14.46
(12'-9-7/8" O.A.)	12.54	1	12.54
Bevels:			
1-3/4" Half	15.96	4	63.84
3-1/2" Full	15.88	49	778.12
Elbows:			
10°-07' w/1'-11-1/8" Spigot Extension	3.04	1	3.04
39°-00'	3.19	1	3.19
36°-07' SP-12 Spigot x SP-5 Bell	2.82	1	2.82
Adapters:			
SP-5 Spigot x SP-12 Bell (0'-9-3/4" O.A.)	0.53	1	0.53
SP-12 Spigot x SP-5 Bell (0'-11" O.A.)	0.66	1	0.66
TOTAL		215	3,361.16
CLASS 150 SP-5 WH-58-24			
Straights	16.03	115	1,843.45
w/16" x 18" Manhole @ 3'-0" From Face Of Bell	16.03	1	16.03
w/16" x 18" Manhole @ 7'-3" From Face Of Bell	16.03	2	32.06
Shorts:			
(9'-7-3/8")	9.33	1	9.33
(3'-1-3/4")	2.86	1	2.86
(9'-5-3/8")	9.17	1	9.17
(12'-0-3/4")	11.78	1	11.78
(5'-3-3/8")	5.00	1	5.00

SPRINGFIELD, MASSACHUSETTS
42" (SP-5), 42" (SP-12)
CONTRACT #44
SUMMARY

Description	Average L.L.	Units	Total L.L.
Bevels:			
1-3/4" Half	15.96	13	207.48
3-1/2" Full	15.88	30	476.40
Elbows:			
7°-00'	0.89	1	0.89
15°-30'	1.45	1	1.45
6°-40'	1.09	1	1.09
43°-06'	3.27	1	3.27
Reducer:			
42" LJS x 36" ID Steel Pipe Eccentric Reducer (4'-4-1/2" OA)	4.09	1	4.09
	TOTAL	171	2,624.35

CLASS 125 SP-5
WH-58-24

Straights	16.03	22	352.66
w/4" Drilled Flange Outlet @ 5'-0" From Face Of Bell	16.03	1	16.03
Shorts:			
(8'-6-1/4" OA)	8.24	1	8.24
Bevels:			
1-3/4" Half	15.96	4	63.84
3-1/2 " Full	15.88	6	95.28
	TOTAL	34	536.05
	GRAND TOTAL	620	9,471.27

NOTE: All Laying Instructions Given Looking In The Direction Of Laying. This Schedule Supplied Only As A Guide For Distributing & Installing Pipe & Fittings. Adjustments To Meet Field Conditions Must Be Made As Required.

Lock Joint Pipe Company
East Orange, New Jersey
JOM:ac 7-25-58
Sheet 1

SPRINGFIELD, MASSACHUSETTS
42" PRESTRESSED CONCRETE CYLINDER PIPE WITH RUBBER & STEEL JOINT SP-5
42" PRESTRESSED CONCRETE EMBEDDED CYLINDER PIPE W/R&S JOINT SP-12
42" BY-PASS CONDUIT CONTRACT #44
OUR JOB NO. PE-58-42 (CLASS 250, 225, 200, 175) SP-12
OUR JOB NO. WH-58-24 (CLASS 150, 125) SP-5

PIPE LAYING SCHEDULE

Qty.	Description		Average L.L.	Horiz.L.L.	Station	& Elev.
ING BELLS AHEAD WESTERLY FROM OUTLET WORKS TOWARD INLET WORKS.					94+26.0	494.3
1	Adapter LJB x Steel Pipe (42" ID, 1/2" Plate) (1'-1" OA)		1.08	1.08		
					94+24.9	
2	Straights		32.06	32.06		
					93+92.9	
1	Short (6'-10" OA)		6.55	6.55		
					93+86.3	
1	Straight w/24" Drilled Fig. #12 Outlet On Top, @ 7'-8" FFOB		16.03	16.03		
					93+70.3	
1	6°-45' Elbow Up	S	0.28	0.28		
				P.I.	93+70.0	494.1
		B	0.61	0.61		
					93+69.4	
2	Straights		32.06	31.84		
					93+37.6	
1	Short (4'-7-7/8" OA)		4.38	4.35		
					93+33.2	
1	Straight		16.03	15.92		
					93+17.3	
1	6°-45' Elbow Up	S	0.28	0.28		
				P.I.	93+17.0	500.5
		B	0.61	0.61		
					93+16.4	
2	Straights		32.06	32.06		
					92+84.3	
1	Short (12'-3-3/4" O.A.)		12.03	12.03		
					92+72.3	
1	Straight		16.03	16.03		
					92+56.3	
1	6°-15' Elbow Up & Right Rotate Counter-Clockwise For 6°-00' Vertical Defl. & 1°-45' Horiz.Defl.	S	0.27	0.27		
				P.I.	92+56.0	500.4
		B	0.60	0.60		
					92+55.4	
1	Short (7'-10-3/4" O.A.)		7.61	7.57		
					92+47.9	
7	3-1/2' Bevels Right		111.16	110.55		
					91+37.3	
1	7°-05' Elbow Up & Right, Rotate Counter-Clockwise For 6°-45' Vertical Defl. & 1°-45' Horizontal Deflection (Vert. Slope 12°-45')	S	0.28	0.28		
				P.I.	91+37.0	513.0
		B	0.61	0.59		
					91+36.4	
4	Straights		64.12	62.54		
					90+73.9	
1	Short (12'-4-1/8" OA)		12.06	11.76		
					90+62.1	
1	Straight		16.03	15.63		
					90+46.5	

APPROVED AS NOTED
SUBJECT TO CONTRACT REQUIREMENTS
BOGERT and CHILDS
CONSULTING ENGINEERS
BY Charles A. Manganaro, P.E.
DATE AUG 7 1958

SP-12 250

Lock Joint Pipe Company
East Orange, New Jersey
JOM:ac 7-25-58
Sheet 2

SPRINGFIELD, MASSACHUSETTS
42" SP-5, 42" SP-12
CONTRACT #44
JOB NOS. FE-58-42, WE-58-24

Pos.	Description		Average L.L.	Horiz.L.L.	Station	& Elev.
					90+46.5	
1	12°-45' Elbow Down	S	0.49	0.48		
					P.I. 90+46.0	533.5
		B	0.78	0.78		
					90+45.2	
2	Straights		32.06	32.06		
					90+13.2	
1	Straight w/16" x 18" Manhole On Top & 2'-10-1/2" From Face Of Bell #11		16.03	16.03		
					89+97.1	
2	Straights		32.06	32.06		
					89+65.1	
1	Short (5'-3-5/8" O.A.)		5.02	5.02		
					89+60.1	533.5
1	1-3/4" Bevel Up, Open Joint 3/8" On Top		15.97	15.96		
					89+44.1	
3	Straights		48.09	48.07		
					88+96.0	
1	Straight w/4" Drilled Flange Outlet On Top & 10'-0" From Face Of Bell		16.03	16.02		
					88+80.0	536.0
1	3-1/2" Bevel Down, Open Joint 1/2" On Bottom		15.91	15.90		
					88+64.1	
6	Straights		96.18	96.13		
					87+68.0	
1	Short (3'-11-3/8" O.A.)		3.66	3.66		
					87+64.3	
1	Straight		16.03	16.03		
					87+48.3	
1	6°-45' Elbow Down	S	0.28	0.28		
					P.I. 87+48.0	531.8
		B	0.61	0.60		
					87+47.4	
1	Straight		16.03	15.85		
					87+31.6	
1	Short (10'-9-7/8" O.A.)		10.54	10.42		
					87+21.1	
1	Straight		16.03	15.85		
					87+05.3	
1	6°-30' Elbow Down	S	0.28	0.28		
					P.I. 87+05.0	525.3
		B	0.61	0.59		
					87+04.4	
2	Straights		32.06	30.96		
					86+73.5	
1	Straight w/16" x 18" Manhole On Top & 2'-10-1/2" From Face Of Bell #10		16.03	15.48	→ 86+61	
					86+58.0	
1	Straight		16.03	15.48		
					86+42.5	
1	13°-00' Elbow Down	S	0.50	0.45		
					P.I. 86+42.0	508.3
		B	0.79	0.68		
					86+41.5	

Lock Joint Pipe Company
East Orange, New Jersey
JOM:ao 7-25-58
Sheet 3

SPRINGFIELD, MASSACHUSETTS
42" SP-5, 42" SP-12
CONTRACT #44
JOB NOS. PE-58-42, WE-58-24

L.	Pcs.	Description		Average L.L.	Horiz.L.L.	Station	E Elev.
						86+41.5	
	1	Straight		16.03	14.14		
						86+27.2	
	1	34°-45' Elbow Up, w/0'-1-7/8" Spigot Extension	S	1.32	1.16		
					P.I.	86+26.0	499.8
			B	1.48	1.47		
						86+24.5	
	3	Straights		48.09	47.77		
						85+76.8	
	1	Short (7'-2" O.A.)		6.89	6.84		
						85+70.0	
	1	Straight w/6" Drilled Flange Outlet w/Flg. x Flg. Blow-Off Bend On Left 60° Below Springline, E 6'-0" From Face Of Bell		16.03	15.92		
						85+54.0	508.3
	1	1-3/4" Bevel Up, Open Joint 1/2" On Bottom		15.98	15.74		
						85+38.3	
	3	Straights, Open First Joint 1/2" On Bottom		48.11	47.38		
						84+90.9	
	1	Short (11'-2-3/4" O.A.)		10.95	10.78		
						84+80.1	
	1	Straight		16.03	15.79		
						84+64.3	
	1	7°-45' Elbow Up, w/2'-5-3/4" Bell Extension	S	0.31	0.31		
					P.I.	84+64.0	524.0
			B	3.08	2.93		
						84+61.1	
	4	Straights		64.12	61.07		
						84+00.0	544.0
	1	3-1/2" Bevel Down, Open Joint 1/2" On Top		15.91	15.53		
						83+84.5	
	4	Straights		64.12	62.60		
						83+21.9	561.3
	1	Straight Up, Open Joint 5/16" On Bottom		16.04	15.63		
						83+06.2	
	8	Straights		128.24	125.00		
						81+81.2	593.7
	1	1-3/4" Bevel Down, Open Joint 1/2" On Bottom		15.98	15.67		
						81+65.6	
	8	Straights		128.24	125.75		
						80+39.8	
	1	Short (6'-5-3/4" O.A.)		6.20	6.08		
						80+33.7	622.8
	1	Straight Down, Open Joint 1/4" On Top		16.04	15.74		
						80+18.0	625.8
	1	1-3/4" Bevel Down, Open Joint 1/2" On Top		15.98	15.82		
				#9		80+02.2	
	1	Straight w/16" x 18" Manhole On Top E 13'-0" From Face Of Bell		16.03	15.87		
						79+86.3	
	5	Straights		80.15	79.35		
						79+07.0	641.6

Lock Joint Pipe Company
East Orange, New Jersey
JOM:ac 7-28-58
Sheet 4

SPRINGFIELD, MASSACHUSETTS
42" SP-5, 42" SP-12
CONTRACT #44
JOB NOS. PE-58-42, WH-58-24

Pos.	Description	Average L.L.	Horiz.L.L.	Station	& Elev.
				79+07.0	641.5
1	1-3/4" Bevel Down, Open Joint 1/2" On Top	15.98	15.88		
				78+91.1	643.4
1	Straight Down, Open Joint 1/2" On Top	16.05	15.97		
				78+75.1	
5	Straights	80.15	79.75		
				77+95.4	653.0
1	1-3/4" Bevel Down	15.96	15.93		
				77+79.4	
5	Straights	80.15	80.00		
				76+99.4	658.8
1	1-3/4" Bevel Down, Open Joint 1/8" On Bottom	15.96	15.95		
				76+83.5	
9	Straights	144.27	144.22		
				75+39.3	662.9
3	Straights Down, Open Each Joint 5/16" On Top	48.12	48.10		
				74+91.2	663.4
5	Straights	80.15	80.15		
				74+11.0	663.8
1	1-3/4" Bevel Up	15.96	15.94		
				73+95.1	
4	Straights	64.12	64.06		
				73+31.0	667.2
1	1-3/4 " Bevel Down, Open Joint 1/8" On Top	15.96	15.96		
				73+15.1	
7	Straights	112.21	112.21		
				72+02.8	667.5
1	Straight Up, Open Joint 1/8" On Bottom	16.04	16.04		
				71+86.8	
8	Straights	128.24	128.24		
				70+58.6	668.3
1	1-3/4" Bevel Up, Open Joint 1/4" On Bottom	15.97	15.95		
				70+42.6	
5	Straights	80.15	80.05		
	#8			69+62.6	
1	Straight w/16" x 18" Manhole On Top @ 3'-6" From Face Of Bell	16.03	16.01		
				69+46.6	
10	Straights	160.30	160.10		
				67+86.5	681.8
1	1-3/4" Bevel Down, Open Joint 3/8" On Top	15.97	15.97		
				67+70.5	
5	Straights	80.15	80.15		
				66+90.3	
4	3-1/2" Bevels Right	63.52	63.52		
				66+26.8	
16	Straights	256.48	256.48		
				63+70.3	
1	3-1/2" Bevel Right	15.88	15.88		
				63+54.5	682.3
1	3-1/2" Bevel Right & Up, Open Joint 1/2" On Bottom Left	15.91	15.87		
				63+38.6	
2	3-1/2" Bevels Right	31.76	31.66		

Lock Joint Pipe Company
East Orange, New Jersey
JON:ac 7-28-58
Sheet 5

SPRINGFIELD, MASSACHUSETTS
42" SP-5, 42" SP-12
CONTRACT #44
JOB NOS. PE-58-42, WH-58-24

Pos.	Description		Average L.L.	Horiz.L.L.	Station	℄ Elev.
					63+06.9	685.7
1	3-1/2" Bevel Right & Up, Open Joint 1/2" On Bottom Left		15.91	15.82		
					62+91.1	
1	Short (13'-7-1/2" O.A.)		13.34	13.27	62+77.9	
					62+77.8	
3	Straights		48.09	47.83		
					62+30.0	693.5
1	3-1/2" Bevel Down, Open Joint 1/8" On Top		15.89	15.88		
				80.14	62+14.1	
5	Straights		80.15	79.79	61+34.0	
					61+34.3	
1	10°-07' Elbow Up, w/1'-11-1/8" Spigot Extension	S	2.33	2.33		
				P.I.	61+32.0	695.5
		B	0.71	0.70		
					61+31.3	
1	Short (14'-8-7/8" O.A.)		14.46	14.17		
					61+15.6	
1	Straight		16.03	15.71		
					61+01.4	
1	39°-00' Elbow Up	S	1.45	1.42		
				P.I.	61+00.0	702.0
		B	1.74	1.11		
					60+98.9	
1	Short (12'-9-7/8" O.A.)		12.54	7.98		
					60+90.9	
1	3-1/2" Bevel Right		15.88	10.10		
					60+80.8	
1	36°-07' Elbow Down, SP-12 Spigot x SP-5 Bell	S	1.27	0.81		
				P.I.	60+80.0	726.3
		B	1.55	1.50		
					60+78.5	
1	3-1/2" Bevel Right		15.88	15.38		
					60+63.1	
1	Straight		16.03	15.53		
					60+47.6	
2	Straights		32.06	31.06		
					60+16.5	
1	Straight w/16" x 18" Manhole On Top @ 3'-0" From Face Of Bell		~~16.03~~	15.53	→	
					60+01.0	746.8
1	1-3/4" Bevel Down, Open Joint 1/2" On Bottom		15.98	15.57		
				62.53	59+85.4	
4	Straights		64.12	62.46		
					59+23.0	
1	Short (9'-7-3/8" O.A.)		9.33	9.09		
				15.63	59+13.9	
1	Straight		16.03	15.61		
					58+98.3	
1	7°-00' Elbow Up	S	0.28	0.27		
				P.I.	58+98.0	770.0
		B	0.61	0.57		
					58+97.4	

Lock Joint Pipe Company
East Orange, New Jersey
JOM:ac 7-28-58
Sheet 6

SPRINGFIELD, MASSACHUSETTS
42" SP-5, 42" SP-12
CONTRACT #44
JOB NOS. PE-58-42, WE-58-24

Pcs.	Description	Average L.L.	Horiz.L.L.	Station	& Elev.
				58+97.4	
2	Straights	32.06	30.13		
				58+67.3	
1	Short (3'-1-3/4" O.A.)	2.86	2.69		
				58+64.6	
1	Straight	16.03	15.06		
				58+49.6	
1	15°-30° Elbow Down	S 0.58	0.55		
			P.I.	58+49.0	787.8
		E 0.87	0.87		
				58+48.1	
3	Straights	48.09	47.94		
				58+00.2	791.6
1	1-3/4" Bevel Down, Open Joint 1/4" On Bottom	15.97	15.95		
				57+84.2	
1	Short (8'-6-1/4" O.A.)	8.24	8.23		
				57+76.0	
1	Straight w/4" Drilled Flange Outlet On Top @ 5'-0" From Face Of Bell	16.03	16.01		
				57+60.0	793.5
1	3-1/2" Bevel Down, Open Joint 1/2" On Bottom	15.91	15.91		
				57+44.0	
8	Straights	128.24	128.22		
				56+15.9	
1	1-3/4" Bevel Down, Open Joint 3/8" On Top	15.97	15.96		
				55+99.9	
10	Straights	160.30	160.13		
				54+39.8	782.2
1	1-3/4" Bevel Up, Open Joint 1/4" On Top	15.97	15.97		
				54+23.8	
1	Straight	16.03	16.03		
				54+07.8	
1	1-3/4" Bevel Right, Open Joint 1/4" On Left	15.97	15.97		
				53+91.8	
5	3-1/2" Bevels Right, Open Each Joint 1/2" On Left	79.55	79.53		
				53+12.3	780.3
1	3-1/2" Bevel Down, Open Joint 3/8" On Bottom	15.97	15.92		
				52+96.4	
11	Straights	176.33	175.78		
				51+20.6	765.0
1	Straight Down, Open Joint 3/8" On Top	16.05	16.00		
				51+04.6	763.7
1	Straight Down, Open Joint 1/4" On Top	16.04	15.99		
				50+88.6	
5	Straights	80.15	79.80		
				50+08.8	
1	#6 Straight w/16" x 18" Manhole On Top, @ 7'-3" From Face Of Bell	16.03	15.96		
				49+92.8	
5	Straights	80.15	79.80		
				49+13.0	745.7

Lock Joint Pipe Company
East Orange, New Jersey
JOM:ac 7-28-58
Sheet 7

SPRINGFIELD, MASSACHUSETTS
42" SP-5, 42" SP-12
CONTRACT #44
JOB NOS. PE-58-42, WH-58-24

Pcs.	Description	Average L.L.	Horiz. L.L.	Station	E Elev.
				49+13.0	745.7
1	Straight Up, Open Joint 3/16" On Bottom	16.04	15.98		
				48+97.1	744.4
1	3-1/2" Bevel Left & Down, Open Joint 1/4" On Bottom Right	15.89	15.83		
				48+81.2	
8	3-1/2" Bevels Left, Open Each Joint 1/4" On Right	127.12	126.70		
	PROVIDE 6" SIDE OUTLET (LEFT) AT APPROX 47+30			47+54.5	
5	3-1/2" Bevels Left, Open Each Joint 1/16" On Right	79.40	79.14		
				46+75.3	
1	Adapter SP-5 Spigot x SP-12 Bell (0'-9-3/4" OA)	0.53	0.53		
				46+74.8	724.9
1	3-1/2" Bevel Left & Down, Open Joint 1/4" On Top Right	15.89	15.81		
				46+59.0	723.5
1	3-1/2" Bevel Left & Down, Open Joint 1/4" On Top Right	15.89	15.81		
				46+43.2	
1	3-1/2" Bevel Left, Open Joint 1/16" On Right	15.88	15.79		
				46+27.4	
4	Straights	64.12	63.76		
				45+63.6	
7	3-1/2" Bevels Left, Open Each Joint 1/8" On Right	111.23	110.61		
				44+53.0	
9	Straights	144.36	143.56		
				43+09.4	687.0
1	3-1/2" Bevel Up, Open Joint 1/2" On Bottom	15.91	15.91		
				42+93.4	
15	Straights	240.45	240.42		
	#5			40+53.0	
1	Straight w/16" x 18" Manhole On Top, @ 3'-6" From Face Of Bell	16.03	16.03	→	
				40+37.0	
1	3-1/2" Bevel Left, Open Joint 3/8" On Right	15.90	15.90		
				40+21.1	682.8
1	3-1/2" Bevel Down & Left, Open Joint 3/8" On Top Right	15.90	15.85		
				40+05.2	
3	3-1/2" Bevels Left, Open Each Joint 3/8" On Right	47.68	47.52		
				39+57.7	
7	Straights	112.21	111.84		
				38+45.9	
3	3-1/2" Bevels Right	47.64	47.47		
				37+98.4	
1	1-3/4" Bevel Up, Open Joint 1/2" On Top	15.98	15.97		
				37+82.4	
9	Straights	144.36	144.29		
				36+38.2	659.9
1	Straight Up, Open Joint 1/2" On Bottom	16.05	16.05		
				36+22.1	659.7

SPRINGFIELD, MASSACHUSETTS
42" SP-5, 42" SP-12
CONTRACT #44
JOB NOS. PE-58-42, WH-58-24

Pos.	Description	Average L.L.	Horiz.L.L.	Station	& Elev.
				36+22.1	659.7
1	3-1/2" Bevel Right & Up, Open Joint 1/8" On Top Right	15.89	15.89		
				36+06.2	
1	3-1/2" Bevel Right, Open Joint 1/8" On Left	15.89	15.89		
				35+90.3	
10	Straights	160.30	160.30		
				34+30.0	
3	3-1/2" Bevels Right, Open Each Joint 1/4" On Left	47.67	47.67		
				33+82.4	
4	Straights	64.12	64.12		
				33+18.2	657.8
1	3-1/2" Bevel Right, Open Joint 1/4" On Left	15.89	15.89		
				32+02.3	
1	3-1/2" Bevel Right, Open Joint 1/4" On Left, w/6" Drilled Flange Outlet w/Flg. x Flg. 60° Blow-Off Bend On Right 60° Below Spring-Line & 9'-6" From Face Of Bell	15.89	15.89		
				32+86.5	657.8
1	3-1/2" Bevels Right & Up, Open Joint 3/8" On Left Bottom	15.90	15.90		
				32+70.6	
3	3-1/2" Bevels Right, Open Each Joint 1/4" On Left	47.67	47.67		
				32+22.9	
12	Straights	192.36	192.36		
				30+30.5	659.2
1	Straight Up, Open Joint 1/2" On Bottom	16.05	16.05		
		#4 16.05		30+14.5	659.4
1	Straight Up, Open Joint 3/8" On Bottom w/16" x 18" Manhole On Top & 3'-0" From Face Of Bell	16.04	16.03		
			111.23	29+98.4	
7	3-1/2" Bevels Left, Open Each Joint 1/4" On Right	111.23	111.19	28+87.2	
				28+87.3	662.7
1	3-1/2" Bevel Left & Up, Open Joint 1/2" On Bottom Right	15.91	15.88		
				28+71.3	
1	3-1/2" Bevel Left, Open Joint 1/4" On Right	15.89	15.86		
				28+55.5	
1	Straight	16.03	16.00		
			144.19	28+39.5	
9	Straights	144.27	144.02	26+95.3	
				26+95.5	673.7
1	Straight Down, Open Joint 5/16" On Top	16.04	16.02	26+79.3	
			192.23	26+79.5	
12	Straights	192.36	192.10	24+87	
				24+87.4	
3	3-1/2" Bevels Left, Open Each Joint 3/8" On Left	47.70	47.63	24+29.4	
			159.98	24+39.7	
10	Straights	160.30	160.08	22+79.5	
			174.69	22+79.1	
11	3-1/2" Bevels Right, Open Each Joint 1/8" On Left	174.79	174.55		
				21+05.1	704.7
				21+05	

Lock Joint Pipe Company
East Orange, New Jersey
JOM:ac 7-28-58
Sheet 9

SPRINGFIELD, MASSACHUSETTS
42" SP-5, 42" SP-12
CONTRACT #44
JOB NOS. PE-58-42, WH-58-24

L.Pos.	Description		Average L.L.	Horiz.L.L.	Station	& Elev.
					21+05.1	704.7
1	3-1/2" Bevel Right & Down, Open Joint 1/4" On Top Left		15.89	15.87		
					20+89.2	
2	3-1/2" Bevels Right, Open Each Joint 1/8" On Left		31.78	31.74		
					20+57.8	
3	Straights		48.09	48.04		
					20+09.8	
1	Straight, #3 w/16" x 18" Manhole On Top, @ 6'-8" From Face Of Bell		16.03	16.01		
				224.39	19+93.4	
14	Straights		224.42	224.17	17+68.9	
					17+69.3	720.2
1	Straight Up, Open Joint 1/2" On Bottom		16.05	16.02	17+52.9	
					17+53.3	721.1
1	Adapter SP-12 Spigot x SP-5 Bell (0'-11" OA), Open Joint 1/2" On Bottom		0.66	0.66		
					17+52.8	
1	Straight Up, Open Joint 3/16" On Bottom		16.04	16.00		
				79.85	17+36.8	
5	Straights		80.15	79.93		
					16+56.7	
1	3-1/2" Bevel Left, Open Joint 1/4" On Left		15.89	15.85		
					16+40.8	
1	1-3/4" Bevel Left		15.96	15.92		
					16+24.8	
8	Straights		128.24	127.89		
					14+97.0	
2	3-1/2" Bevels Left, Open Each Joint 1/8" On Left		31.78	31.69		
					14+65.3	742.6
1	3-1/2" Bevel Left & Up, Open Joint 1/8" On Bottom Right		15.89	15.84		
					14+49.5	
7	Straights		112.21	111.87		
					13+37.6	
2	1-3/4" Bevels Left, Open Each Joint 1/4" On Left		31.94	31.84		
					13+05.8	
3	Straights		48.09	47.90		
					12+57.9	
1	Short (9"-5-3/8" O.A.)		9.17	9.14		
					12+48.7	
4	3-1/2" Bevels Right, Open Each Joint 1/8" On Left		63.56	63.31		
					11+85.4	
1	6°-40' Elbow Right & Down,	S	0.41	0.41		
				P.I.	11+85.0	767.5
		B	0.68	0.68		
					11+84.3	
1	Straight		16.03	16.03		
					11+68.3	
1	3-1/2" Bevel Right, Open Joint 1/8" On Left		15.89	15.89		
					11+52.4	
1	Straight		16.03	16.03		
					11+36.4	

Lock Joint Pipe Company
East Orange, New Jersey
JOM:ac 7-28-58
Sheet 10

SPRINGFIELD, MASSACHUSETTS
42" SP-5, 42" SP-12
CONTRACT #44
JOB NOS: PE-58-42, WE-58-24

Pcs.	Description		Average L.L.	Horiz.L.L.	Station	& Elev.
					11+36.4	
8	1-3/4" Bevels Left, Open Each Joint 3/8" On Left		127.76	127.76		
					10+08.6	
1	Straight w/16" x 18" Manhole #2 On Top, & 7'-3" From Face Of Bell		16.03	16.03		
					9+92.6	
9	Straights		144.27	144.27		
					8+48.3	767.5
1	3-1/2" Bevel Up, Open Joint 1/2" On Top		15.91	15.88		
					8+32.4	
1	Straight		16.03	16.00		
					8+16.4	769.5
1	3-1/2" Bevel Down, Open Joint 1/2" On Bottom		15.91	15.91		
					8+00.5	
1	Straight		16.03	16.03		
					7+84.5	
1	3-1/2" Bevel Right, Open Joint 1/2" On Right		15.91	15.91		
					7+68.6	
19	Straights		304.57	304.57		
					4+64.0	
1	3-1/2" Bevel Right, Open Joint 1/2" On Right		15.91	15.91		
					4+48.1	769.5
1	3-1/2" Bevel Right & Up, Open Joint 1/4" On Top Right		15.89	15.88		
					4+32.2	
17	Straights		272.51	272.39		
					1+59.8	
1	Short (12'-0-3/4" OA)		11.78	11.77		
					1+48.1	778.4
1	1-3/4" Bevel Up, Open Joint 1/2" On Top		15.98	15.96		
					1+32.1	
7	Straights		112.21	112.04		
					0+20.1	
1	43°-06' Elbow	S	1.49	1.49		
					P.I. 0+18.6	785.8
		B	1.78	1.78		
			4.00	4.00	0+16.8	
1	Short (5'-3-3/8" O.A.)		5.00	5.00	0+12.8	
			3.81	3.81	0+11.8	785.2
1	Eccentric Reducer 42" LJS x 36" ~~ID Steel Pipe~~ (~~4'-1-1/2" OA~~)		4.09	4.09		
					0+09.0	
					0+07.7	785.4
1	ADAPTER LJS x STEEL PIPE (36" I.D., 3/8" MIN. PL)		0.76	0.76		
					0+08.2	

Short Circuit Protective Device Coordination and Arc Flash Hazard Analysis

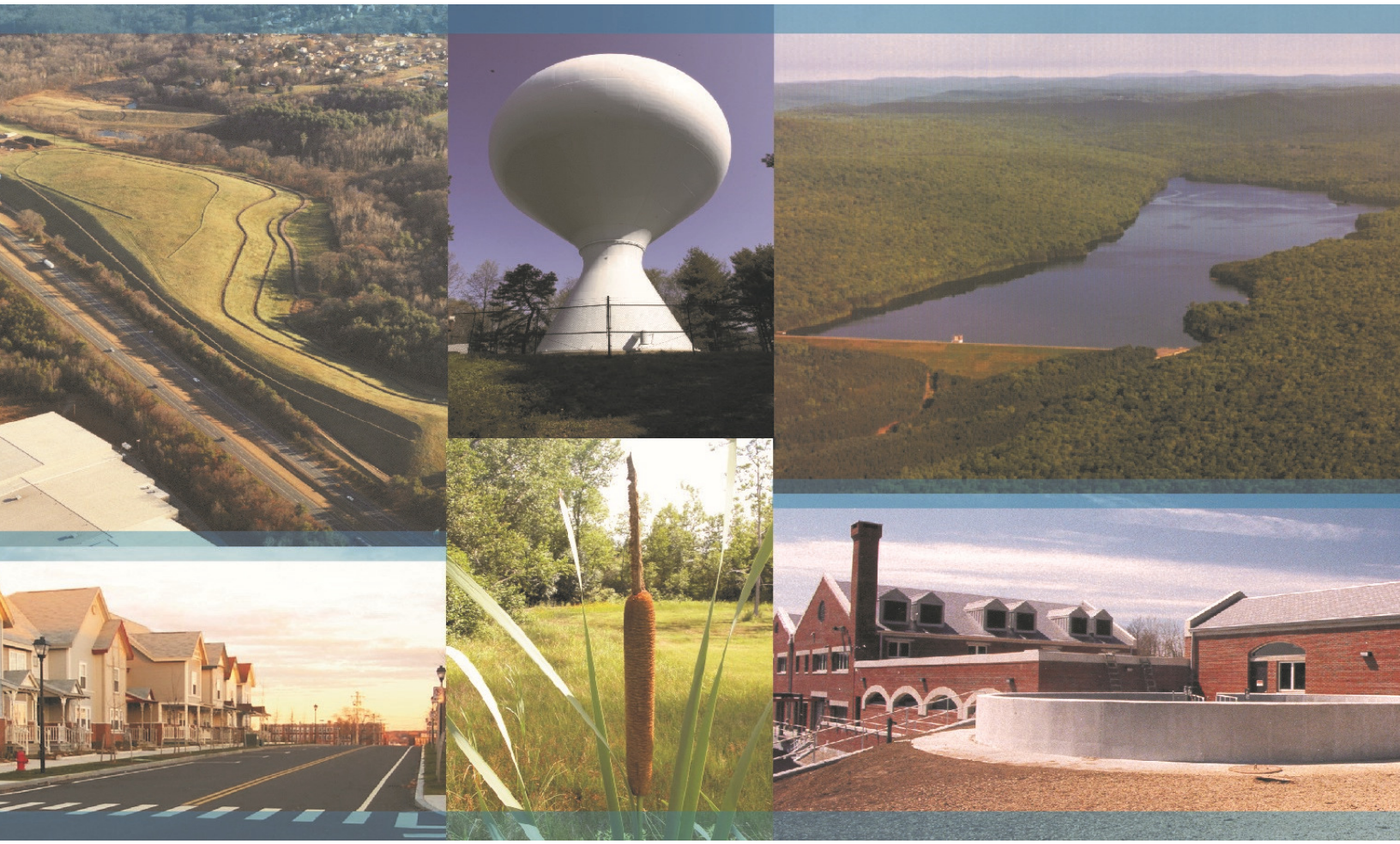

West Parish Filters Facility
1515 Granville Road, Westfield, MA

Short Circuit, Protective Device Coordination and Arc Flash Hazard Analysis

Springfield Water & Sewer Commission

June 2019

Engineers | Environmental Specialists

Section 1 Executive Summary

1.1 General....1-1
1.2 Short Circuit Study....1-1
1.3 Protective Device Coordination....1-2
1.4 Arc Flash Hazard Analysis....1-2
1.5 Summary of Recommendations....1-3

Section 2 Introduction

2.1 Description of Work Performed....2-5
2.1.1 Scope of Study....2-5
2.2 System Modeling....2-6
2.2.1 System Equipment One-Line Diagrams....2-6
2.2.2 Description of the Bus and Equipment Naming System....2-6
2.2.3 System Impedance Data, Assumptions, and Notes....2-6
2.3 Computer Program Information....2-7

Section 3 Short Circuit Calculations

3.1 Short Circuit Analysis....3-1
3.1.1 Study Case Operating Conditions....3-1
3.1.2 Short Circuit Analysis Method....3-2
3.2 Short Circuit Study Results and Commentary....3-2
3.2.1 Action List....3-4

Section 4 Protective Device Coordination Study

4.1 Introduction....4-1
4.1.1 Protective Requirements and Standards....4-1
4.1.2 Transformers....4-1
4.1.3 Bus and Feeders....4-2
4.1.4 Motors....4-2
4.1.5 Protective Philosophy....4-2
4.1.6 Coordination Study Procedure....4-2
4.2 Commentary, Recommendations and Action List....4-3
4.2.1 West Parish Filters Facility distribution system....4-3
4.2.3 General Recommendations....4-26
4.2.4 Protective devices with new recommended settings....4-26
4.2.5 Action List....4-28

Section 5 Arc Flash Hazard Analysis

5.1 Introduction....5-1
5.2 Methodology....5-1

5.2.1 Arc Energy at Reduced Current 5-2
5.2.2 Protective Device Settings 5-2
5.2.3 Consideration of System Modes of Operation 5-2
5.2.4 IEEE-1584, 2002 and NFPA 70E, 2018 Comparison 5-3
5.3 Warning and Disclaimer 5-3
5.4 Key Assumptions 5-4
5.5 Explanation of Data in Arc Flash Hazard Report Tables 5-4
5.5.1 Bus Name 5-5
5.5.2 Protective Device Name 5-5
5.5.3 Bus kV 5-6
5.5.4 Bus Bolted Fault (kA) 5-6
5.5.5 Bus Arcing Fault (kA) 5-6
5.5.6 Protective Device Bolted Fault (kA) 5-6
5.5.7 Protective Device Arcing Fault (kA) 5-6
5.5.8 Trip/Delay (sec.) 5-7
5.5.10 Ground 5-7
5.5.11 Equipment Type 5-7
5.5.12 Gap (mm) 5-7
5.5.13 Flash Hazard Boundary (in.) 5-7
5.5.14 Working Distance (in.) 5-8
5.5.15 Incident Energy (cal/cm2) 5-8
5.5.16 Protective Clothing Guidelines Based on NFPA 70E Table 130.5(G) 5-8
5.6 Additional NFPA 70E Data 5-9
5.6.1 Shock Hazard 5-9
5.6.2 Approach Boundaries 5-9
5.6.3 Limited Approach Boundary 5-10
5.6.4 Restricted Approach Boundary 5-10
5.7 Results of Arc Flash Hazard Analysis 5-10
5.7.1 General 5-10
5.7.2 Arc Flash Results for the Electrical System 5-10
5.7.4 Action List 5-10

Appendices

A - SKM One-Line Diagram
B - Arc Flash Results
C - Overcurrent Protective Device Settings
D - Bus Evaluation
E - Overcurrent Protective Device Evaluation
F - Arc Flash Labels

Section 1
Executive Summary

1.1 General

This report presents the results of protective device coordination, short circuit, and arc flash hazard studies for the West Parish Filters Facility located in Westfield, MA . In order to perform the studies, a detailed model of the West Parish Filters Facility electrical service from the main 1000kVA transformer down to the electrical equipment and local disconnects was created. The model created using the SKM Power Tools Version 8.0.3.5 software program.

The SKM model served as the basis for the arc flash hazard study including equipment and manufacturers' data repository, and short circuit analysis results for this study. The SKM model and this study should be considered a living document in which the electrical safety infrastructure is based. For this reason, it is imperative that facility management commit to keeping the database updated as the facility changes, not only for compliance with NFPA 70E, but also to provide good operating decisions and worker safety.

This report provides recommended settings changes for a number of devices to improve coordination. Arc Flash study results are based on these recommended settings. The results presented are intended to be used as part of a comprehensive electrical safety program, consistent with the requirements of the latest version of NFPA 70E.

Information provided with this report includes a detailed arc flash hazard report, protective device coordination settings, short circuit calculations, equipment duty analysis, a table of recommended protective device settings used in the arc flash calculations, comments on protective device coordination, and a computerized database of the system model.

Recommendations related to the specific areas of the study are summarized below. A prioritized summary of recommendations is provided at the end of this section.

1.2 Short Circuit Study

As part of the arc flash study, short circuit calculations were performed for each bus/equipment in the system as represented on the one-line diagram with interrupting devices. The interrupting ratings for breakers and fuses are included. Underrated equipment can fail, sometimes catastrophically, when subjected to short circuit currents that exceed their tested maximum values. Operation with underrated equipment is dangerous to workers and represents a potential fire hazard. We recommend that each underrated piece of equipment be replaced with properly rated equipment. Equipment with an unknown short circuit current rating (SCCR) has been assumed to have an SCCR rating of 10kA for power equipment and 5kA for control panels.

The following assumptions were made where devices could not be verified due to site conditions or age:

- Infinite Fault Contribution available to the primary side (4.8kV) of the facility's 1000kVA transformer.
- 480V and 208V Disconnects were assumed to have an SCCR rating of 10kA.

- 480V Control Panels were assumed to have an SCCR rating of 5kA.
- 480V and 208V Panelboards with limited nameplate data were assumed to have an SCCR rating of 10kA.
- Motor Control Centers (MCC) were assumed to have an SCCR rating of 22kA, which is the lowest rating for the model of MCC.
- Motor Circuit Protectors and Breakers within the MCCs were based on the MCC model and sizes listed on the oneline diagram when the device's nameplate was obstructed.
- Temporary 42" Bypass Equipment was modeled as a single bus and all equipment installed will receive the same worst-case label. The study should be updated when equipment is permanently installed.

The results of the short circuit study indicate that several overcurrent protective devices and pieces of equipment are overdutied, and currently present safety hazards.

Ratings of the equipment should be verified by Springfield Water and Sewer to assure compliance.

1.3 Protective Device Coordination

A protective device coordination study was performed on the West Parish Filters facility electrical distribution system to determine protective device settings that will quickly isolate system faults and minimize equipment damage and downtime. A compromise is often required between system protection / lowering arc flash energies and continuous electrical service in determining protective device settings.

The results of the study reveal that overall protection cannot be selectively coordinated for the electrical equipment. Many breakers used within the facility have fixed settings or only provide instantaneous adjustment settings. The settings recommended as a result of the study improve the probability that a downstream fault will trip the closest breaker. However, given the type and age of these breakers, coordinated protective device operation cannot be guaranteed.

1.4 Arc Flash Hazard Analysis

A comprehensive arc flash hazard analysis was performed to estimate: (1) arc flash boundary distance and (2) arc flash incident energy at typical working distances. This analysis was done in accordance with the requirements and recommendations of IEEE-1584, 2002, and protection requirements in NFPA 70E, 2018. Tables are provided listing arc flash energies and arc flash boundaries. See Section 5 "Arc Flash Hazard Analysis".

The calculations were performed for a number of scenarios with differing fault values to accurately reflect the available fault current in any given configuration. It should be pointed out that the calculated arc flash energies were determined by three-phase fault arcing currents and arcing time, which are based on the time versus current tripping characteristics (TCC) of the protective devices used in the system.

Utility fault data was not used for this study due to the number of different configurations available. The generation station upstream has multiple generation units and a utility interconnection. The status of each unit and utility supply is independent of the West

Parish Filters. Multiple scenarios were run to adequately represent the worst-case incident energy in any given upstream configuration. The following scenarios were run:

- Infinite Available Fault Current at the primary of the 1000kVA transformer. This allows the 1000kVA transformer to supply the maximum amount of fault current based on the transformer size, voltage and impedance.
- 10kA Fault Current at the primary of the 1000kVA transformer.
- 5kA Fault Current at the primary of the 1000kVA transformer.
- 2kA Fault Current at the primary of the 1000kVA transformer.
- 1kA Fault Current at the primary of the 1000kVA transformer.
- 500A Fault Current at the primary of the 1000kVA transformer.

The results of the arc flash hazard analysis using the recommended protective device settings from the Protective Device Coordination Study indicate that most of the points (buses/equipment) in the electrical system have manageable levels of incident energy, but there is a high energy level at the Main Switchgear. Energized work should be prohibited on this equipment.

It is imperative that the facility management understand that any increase in protective device settings or changing of protective devices can increase the arc flash hazard for a wide area of equipment, thereby invalidating this study. Therefore, arbitrary changes in protective device sizes or trip settings should not be permitted. It is critical for personnel and equipment safety that all distribution breakers be maintained per manufacturer's recommendations. Each overcurrent protective device should be tested and maintained in accordance with manufacturer's recommendations. If any of the breakers require more time to trip than the manufacturer's TCC, then the calculated arc flash results are invalid until the breaker is replaced.

1.5 Summary of Recommendations

Recommendations are summarized in the following table and assigned priorities based on the following criteria.

Priority 1	Possible code violation or potential safety hazard requiring correction as soon as feasible.
Priority 2	Recommended change or correction to improve overall system reliability or safety.
Priority 3	Suggested change to reduce potential arc flash hazard or simplify maintenance.
Priority 4	On-going maintenance recommendation.

Recommendation Reference	Recommendation	Priority	
General Recommendations			
Gen-1	Maintain all equipment on a regular basis in accordance with manufacturer instructions.	4	

Recommendation Reference	Recommendation	Priority	
Gen-2	Test any protective devices which have not been maintained to verify they are operating in compliance with the manufacturers published standards.	1	
Gen-3	Panels schedules should be updated to reflect downstream load with matching field markings on downstream devices.	3	
Gen-4	Provide additional labeling to the V-Belt Starter in MCC#4 stating that the starter is not electrically supplied by MCC#4 and will remain energized when MCC#4 is shutdown.	1	
Short Circuit Study			
SC-1	• 60 HP Pump Control Panel, Cold Gen Control Panel, Cold Gen Panel Disconnect, Duplex Ejector Control Panel, MCC#4 and Process Water Pump Control Panel failed the bus evaluation due to inadequate SCCR ratings. Live work on these buses should not take place until corrective actions are taken. Additional results and recommendation are listed in Section 3.	1	
SC-2	Circuit breakers and motor circuit protectors within MCC#1, MCC#2, MCC#4 and EMCC have failed the protective device evaluation due to inadequate SCCR ratings. Live work on these motor control centers should not take place until corrective actions are taken. Additional results and recommendations are listed in Section 3.		
Protective Device Coordination			
PDC-1	Develop a project plan to implement the protective device setting changes recommended in this report as quickly as possible. This report is not valid until these settings changes are made (new settings are listed in Section 4)	1	
PDC-2	Perform routine periodic maintenance and testing of overcurrent protective devices.	4	
PDC-3	Develop a training plan for all facility electricians, educating them on the arc flash hazards of adjusting or modifying protective device settings or fuse sizes without proper verification.	4	
Arc Flash Hazard Study			
AF-1	Prohibit energized work at the Main Switchgear.	1	
AF-2	Implement a process and job briefing/planning process for all electrical work tasks in compliance with requirements of NFPA 70E.	2	

Recommendation Reference	Recommendation	Priority	
AF-3	Install arc flash hazard labels after protective device setting changes are implemented. See PDC-1	2	
SKM Database Model and System Data			
DB-1	Keep the SKM model updated for NFPA 70E Article 120.2-E and 205.2 compliance. An arc flash evaluation will be required every 5 years. (NFPA 70E, 130.5)	2	

Section 2
Introduction

2.1 Description of Work Performed

This report presents the results of a detailed engineering study of the electrical distribution system. The study had the following objectives:

- Create a detailed *SKM* model for the electrical distribution system.
- Perform short circuit calculations and evaluate short circuit current ratings for modeled equipment.
- Perform a protective device coordination analysis to provide proper settings for the facility protective devices.
- Perform an arc flash hazard analysis to determine arc flash boundaries and arc flash energy levels for the facility's electrical system.
- Provide general recommendations on ways to reduce electrical hazards.

In performing the study an effort has been made to minimize assumptions and to provide the most accurate data available. Some necessary assumptions are noted in this report. Any change in operating conditions or equipment from those assumed in this study may require a change in other equipment or components to maintain adequate equipment ratings and acceptable protection and coordination.

2.1.1 Scope of Study

The study covers the electrical distribution system for the West Parish Filters facility from the facility owned 1000kVA (4.8kV-480/277V) transformer down to the 208V and greater panels, industrial control panels, utilization equipment and local disconnect switches.

Data for the system model was field collected by Tighe & Bond and Springfield Water and Sewer staff, along with available record drawings and submittals. Site knowledge by Springfield Water and Sewer staff was utilized when labeling was not present or out of date. All the provided information was compiled in the SKM one-line diagram to produce

a complete power system model. The *SKM* model was then used to analyze the short circuit behavior of the complete power system, and finally to compute the expected arc flash energy at each bus.

Specific elements of the study include:

- A detailed computer database and graphical model of the complete electrical power system using *SKM.* The resulting database allows for easy updating and modifications for any studies.
- A tabulation of circuit breaker settings, relay settings and fuses.
- Calculations to determine the available three-phase short circuit duties on the system's interrupting devices. The resulting data provides the basis for the verification of the ratings of the breakers and fuses.
- A tabulation of short circuit duties for equipment in the system.
- Review of system operating conditions (modes of operation) requiring an arc flash analysis.
- Arc flash hazard tabulations for each bus/equipment, which may require an arc flash label.
- Comments and recommendations on problem areas to increase system protection.

2.2 System Modeling

This section provides details on the system represented to help understand and interpret the study results.

2.2.1 System Equipment One-Line Diagrams

A one-line diagram, an essential base for all system studies, describes the electrical power system equipment, layout, and connections, and can be appropriately called an Equipment One-line Diagram. One-lines are used for visualization of the power distribution system, and as a computer data entry reference.

The one-line diagram presented in Appendix A was developed for the entire facility power system directly in SKM. This allows all required analytical functions to be performed using the same one-line and system database.

2.2.2 Description of the Bus and Equipment Naming System

Bus and equipment names are shown on the SKM one-line diagrams and follow the names used on the design drawings, when available. Bus names are assigned to each point in the system where two or more circuit elements are interconnected.

2.2.3 System Impedance Data, Assumptions, and Notes

An attempt was made to minimize assumptions and provide the most accurate data available in this study. Some necessary assumptions are noted in this report. Any change in conditions or equipment from those assumed in this study may require a change in protective device settings or components to maintain proper coordination and protection.

2.3 Computer Program Information

Database formation, short circuit, and arc flash calculations were performed using SKM Power Tools Version 8.0.3.5. The SKM database is designed specifically for industrial power system data input and reduction. Equipment data for motors, transformers, conductors, etc., are input directly into the database from the graphical one-line diagram using industry standard terminology. This provides a permanent record (computer storage) of each piece of equipment that describes the electrical system, and allows for easy modification or review of equipment through the one-line.

Section 3
Short Circuit Calculations

3.1 Short Circuit Analysis

A short circuit analysis of the electrical system was performed to determine the maximum momentary (first ½ cycle Close & Latch - Momentary) and interrupting currents available, and the adequacy of the protective equipment to withstand and interrupt the current. It is imperative from a safety standpoint that the equipment designed to interrupt and clear an arcing fault be adequately rated to prevent failure when it is called on for that protection. The primary goal in the short circuit calculations was to determine the bolted fault currents that were then used to calculate the anticipated arcing fault currents, based on the IEEE-1584 equations. Interrupting ratings of the protective devices were obtained during data collection and from manufacturer published data for the devices throughout the facility. The calculated fault current and corresponding breaker duties were compared for all buses modeled in SKM and it was determined that most buses and protective devices were adequately rated.

3.1.1 Study Case Operating Conditions

The short circuit evaluation must consider the operating conditions that will provide the maximum possible short circuit currents that can reasonably be expected. While this may represent an unlikely condition, it is necessary to err on the side of caution and provide equipment that is adequately rated for any possible operating condition.

In industrial power systems, pre-fault voltages are normally considered as the system nominal voltage at the fault point because this is close to the maximum operating voltage under a fully loaded system condition and, therefore, the short circuit current will approach maximum due to motor contributions. Because an increase in voltage can lead to increased short circuit currents and decreased equipment interrupting capability, it is essential that a conservative yet representative pre-fault voltage be used. In this short circuit study, a pre-fault voltage level of 1.0 pu voltage was used to perform short circuit calculations. For the purposes of this evaluation, the following operating conditions were also assumed:

- All induction motors included in the model are assumed to be running to maximize motor fault contributions.
- Three-phase bolted faults with zero fault impedance.
- Equipment ratings were collected in the field by Tighe & Bond.
- For the equipment where the UL ratings were not visibly listed on the equipment, we assumed that the equipment construction followed UL 508A-2001 supplement SB and we assumed its SCCR rating to be consistent with similar equipment, with a minimum rating of 10kA for panelboards and disconnect switches, and 5kA for control panels and HVAC equipment.
- SCCR ratings and proper maintenance should be verified against equipment records prior to performing any live work. If proper maintenance cannot be verified, or if the SCCR rating differs from the ratings shown in Appendix D, live work should be prohibited, and the engineer should be contacted for further guidance.
- The Motor Control Centers were assumed a minimum SCCR rating of 22kA based on manufacturer documentation. The actual SCCR may be higher but is not listed on the nameplate of the equipment.

- Some of the breakers and motor circuit protectors within the Motor Control Centers were assumed based on manufacture documentation and load size. In some instances, additional covers within the MCC buckets were covering the devices nameplates and it was deemed unsafe to remove those covers while energized. Where the models on the nameplates were not visible, the lowest SCCR rating was chosen and sized based on the record drawings.

3.1.2 Short Circuit Analysis Method

Short circuit currents were calculated using SKM Power Tools Version 8.0.3.5 software for electrical system analysis. SKM short circuit and equipment duty calculations are based on the ANSI recommendations and requirements for evaluating equipment short circuit ratings.

SKM automatically calculates the worst case short circuit current for each device modeled and compares it against the rating of the device in accordance with ANSI standards, taking into account any de-rating required by the system X/R ratio.

3.2 Short Circuit Study Results and Commentary

Short circuit levels on the electrical system are impacted mostly by transformer impedances (let-thru current) with additional contributions from induction motors.

Equipment that is underrated (overdutied) can fail catastrophically under fault conditions and represent a potentially serious safety and fire hazard.

Equipment duty results for the electrical system indicate there are several pieces of equipment with available fault currents that are greater than their UL tested interrupting ratings. The equipment is underrated and does not meet NEC and UL application requirements.

The underrated 480-volt buses (equipment other than a protective device) are shown in Table 1. Options available to correct the equipment rating issue:

- Eliminate existing non-fused disconnect switches.
- Check equipment for field markings/labels that may prove the SCCR rating to be higher than indicated in this report (the SCCR rating for some equipment could not be verified during data collection; in these cases, assumed SCCR ratings were used)
    - If equipment SCCR ratings cannot be proved adequate, a UL-listed panel shop should be contacted to develop steps to properly rate the equipment. OR
    - Replace with adequality rated equipment.
- Live work on this equipment should not be done until corrective actions are taken.

Table 1
Overdutied Equipment

Equipment ID	SCCR Rating	Available Short Circuit Current kA
60 HP PUMP CONTROL PANEL	5	6.00

COLD GEN CONTROL PANEL	5	14.40
COLD GEN DISCONNECT SWITCH	10	15.42
DUPLEX EJECTOR CONTROL PANEL	5	5.26
MCC#4	22	23.12
PROCESS WATER PUMP CONTORL PANEL	5	8.91

The underrated 480-volt protective devices are shown in Table 2.

The motor circuit protectors (MCP's) in EMCC, MCC#1, MCC#2 and MCC#4 were assumed to be GE type TEC MCP's rated at 10kA. Field conditions did not allow confirmation and the lowest rated devices were modeled based on the MCC model. MCP's were not required to be modeled within this Arc Flash Study for MCC#3 but it can be assumed to have the same GE type TEC rated at 10kA.

The breakers in MCC#4 were assumed to be GE type TFK or TFJ rated at 22kA. Field conditions did not allow confirmation and the lowest rated devices were modeled based on the MCC model.

Options available to correct the equipment rating issue:

- Verify model type and SCCR rating of protective devices during an outage and update the model type in the SKM model OR replace the protective device with a properly rated device and update in SKM model.
- Live work on the MCC's where these devices are install should not be done until corrective actions are taken.

Table 2
Overdutied Protective Devices

Equipment ID	SCCR Rating	Available Short Circuit Current kA
CB_EMCC – CAUS XFER PP1	10	26.20
CB_EMCC – CAUS XFER PP2	10	26.20
CB_EMCC – HV-1	10	26.20
CB_EMCC – HV-3	10	26.20
CB_EMCC – HV-4	10	26.20
CB_EMCC – HV-5	10	26.20

CB_MCC#1 – EF-11 (1)	10	12.64
CB_MCC#1 – EF-11 (2)	10	12.64
CB_MCC#1 – SUMP PUMP	10	12.64
CB_MCC#2 – EF-11(3)	10	12.71
CB_MCC#4 – AC-1	10	26.82
CB_MCC#4 – CHLD WTR PP1	10	26.82
CB_MCC#4 – CHLD WTR PP2	10	26.82
CB_MCC#4 – CND WTR PP1	10	26.82
CB_MCC#4 – CND WTR PP2	10	26.82
CB_MCC#4 – EF-10	10	26.82
CB_MCC#4 -= 60 HP PUMP	22	23.18
CB_MCC#4 - DPL	22	23.18
CB_MCC#4 – COLD GEN	22	23.18
MCC#3 Motor Circuit Protectors	10	20.65

Equipment that is overdutied can fail catastrophically under fault conditions and represent a potentially serious safety and fire hazard.

For the complete device and bus evaluation results see appendices D and E.

3.2.1 Action List

- During maintenance opportunities or the next shutdown, inspect all 480 V breakers and motor circuit protectors in all equipment to document type and interrupting rating. Verify the adequacy of each breaker's interrupting rating using the 3-phase momentary short circuit data provided with this report. If equipment is confirmed to be failing based on nameplate rating, they should be replaced with adequately rated devices.

Section 4
Protective Device Coordination Study

4.1 Introduction

A protective device coordination study was performed on the facility's electrical distribution system to determine proper protective device settings that will quickly isolate system faults and minimize equipment damage and downtime. Because the potential arc flash energy for any location is a function of both the arc current and the arc duration, actual protective device types and characteristics were used, to the extent possible, to determine the expected arc duration at each bus. Once the protective device type and settings are entered into the SKM model and the coordination study is completed, the software can determine the expected arc duration based on the arc current through the upstream devices. A compromise is often required between system protection / lowering arc flash energies and continuous electrical service in determining protective device settings.

Protection studies are inherently part art and part science. There are no "perfect" relay/breaker settings or protection techniques which will cover every circumstance or type of system configuration. A great number of factors influence the final protection characteristics of a given system. These include the type of protective devices employed, the system design, the voltage and current levels, the arc flash energy levels, the type of process or service required, and the type of protective philosophy chosen. In any protection study there is sufficient room for differing opinions to produce slightly diverse settings. Those familiar with the operational objectives of the power system supporting the process can best do the fine-tuning. This report reviews the protective device system only. It does not include a review of the control or metering devices.

The arc flash results provided in this report are based on the breaker settings recommended in this coordination study. A full list of breaker settings is shown in Appendix C. These settings shall be implemented for the results presented throughout this report to be valid.

4.1.1 Protective Requirements and Standards

The protection requirements provided by the American National Standards Institute (ANSI) and the National Electrical Code are the basis for all system coordination studies. They provide the boundaries that protective devices must operate within to ensure equipment reliability and safety of the system. The standards outlined below pertain to various types of equipment.

4.1.2 Transformers

The ANSI Standards C57.12.00, C57.12.01, and C57.109, and Section 450-3 of the NEC provide transformer protection boundaries that ensure transformer thermal and mechanical protection. SKM provides detailed transformer Z-Curves describing the thermal, overload, and mechanical damage protection points required to ensure that the transformer is protected for thru-faults and overload conditions.

4.1.3 Bus and Feeders

The Insulated Cable Engineers Association (ICEA) gives bus and feeder protection requirements in Article 240, Sections 3 and 100 of the NEC. The NEC states that low voltage (600V and below) conductors must be protected within their ampere rating. High voltage cables must be protected within 6x their ampere rating when protected by breakers, and 3x for fuses. ICEA gives overload and short circuit capability ratings.

4.1.4 Motors

Motor protection requirements are found in Sections 430-32 and 430-52 of the NEC. The NEC states that overload devices shall be set at no more than 125 percent of motor full load current for 1.15 service factor motors; all other motors shall be set at no more than 115 percent. Maximum instantaneous trip settings can be no more than 13 times full load current. Detailed motor protection was not provided as part of this study, but it was assumed that the instantaneous setting of molded case circuit breakers did not exceed 13 times the motor full load current.

4.1.5 Protective Philosophy

An attempt was made to maximize system selectivity between protective devices to help ensure service continuity and avoid nuisance tripping throughout the facility electrical distribution system. This is accomplished by adjusting device settings to improve the probability of a downstream device tripping before an upstream device. The present philosophy of using breakers with instantaneous trips for each piece of 480V equipment limits selective coordination at this level. Based on this equipment selection, personnel and equipment protection will take priority in the device settings selected.

4.1.6 Coordination Study Procedure

The selection and coordination of the system's protective devices was determined by plotting each device's time-versus-current operating characteristic for a given feeder and supply. Each device was then compared with its respective upstream and downstream device to ensure proper selectivity and protection. If a lack of selectivity or protection was found, the device or methods of changing the device's current or time setting were identified.

In determining if sufficient protection exists, all protective device characteristic curves must fall within the boundaries established by ANSI and the NEC. All device curves must be adequately separated to make certain that unwanted operation will not occur. What constitutes adequate separation depends on the type of device used and the safety factor desired. Clear space between the curves is considered as adequate separation in this study.

This report includes the following information:

- Detailed phase time current curves (TCCs) for select equipment in the facility.
- A tabulation of low voltage breaker trip (including recommended settings) settings and fuses, which are used to determine arc durations in the arc flash study.
- Recommendations to improve protective device coordination.
- A list of recommended circuit breaker settings resulting from the coordination study. These settings were used to determine the arc flash results presented throughout this report.

4.2 Commentary, Recommendations and Action List

4.2.1 West Parish Filters Facility distribution system

The power distribution system consists of a 1000 kVA facility-owned transformer feeding the 480V Main Switchgear. The Main Switchgear has a secondary generator feed that is interlocked with the main breaker. The secondary supply is from an 800 kW generator for facility backup power. The Main Switchgear feeds various 480V motor control centers and distribution panels throughout the facility down to the 480V panelboards, 208V panelboards, control panels and disconnects.

For maximum selectivity and reliability of service, the instantaneous settings for upstream circuit breakers are typically set to higher values than those downstream. This allows the downstream protective devices (breakers or fuses) for individual loads/motors to trip first for low amperage faults, limiting the amount of equipment that is shut down due to the fault. Only higher amperage faults might cause multiple instantaneous units (for the individual load protective device(s) and the upstream breaker) to trip at the same time, shutting down the entire panelboard/switchboard. It should be noted that this mis-coordination is inherent in the design when applying series instantaneous trip devices. Since the equipment design limits selectivity and system reliability, favoring protection, the instantaneous devices should be set to provide the best protection possible since complete selectivity cannot be achieved in most cases.

TCC_01 displays the selective coordination between the main breaker and the largest feeder breakers in the main switchgear. The tie breaker is also coordinated up to 5.7kA with the largest feeder breakers.

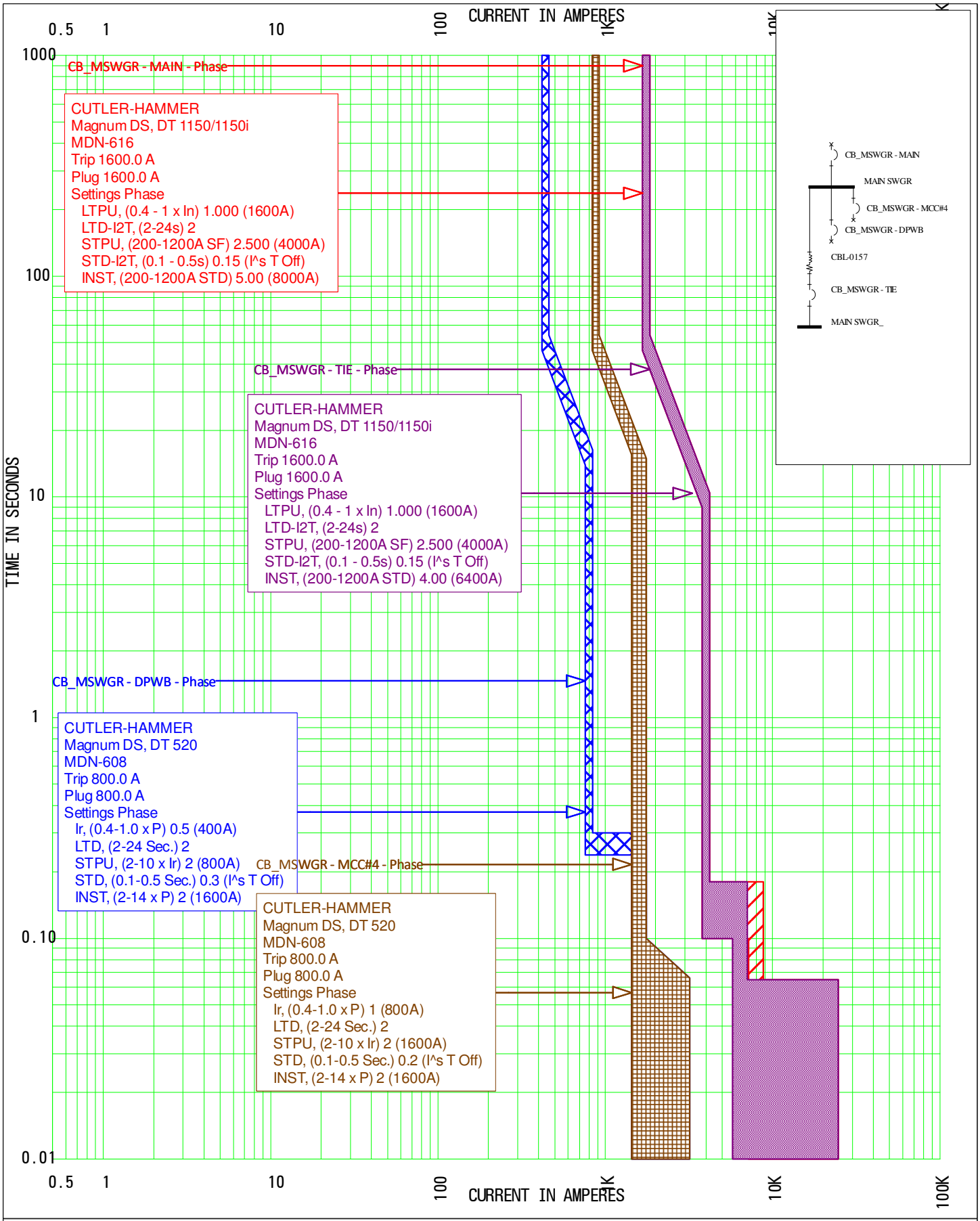

TCC Name: TCC_01

Current Scale x 1

Reference Voltage: 480V
Springfield Water & Sewer
1515 Granville Road

TCC_02 displays the ground fault settings for the main switchgear breakers. The breakers are coordinated between the main breaker and largest feeder breakers in the switchgear. The tie breaker is also coordinated with the largest feeder breakers.

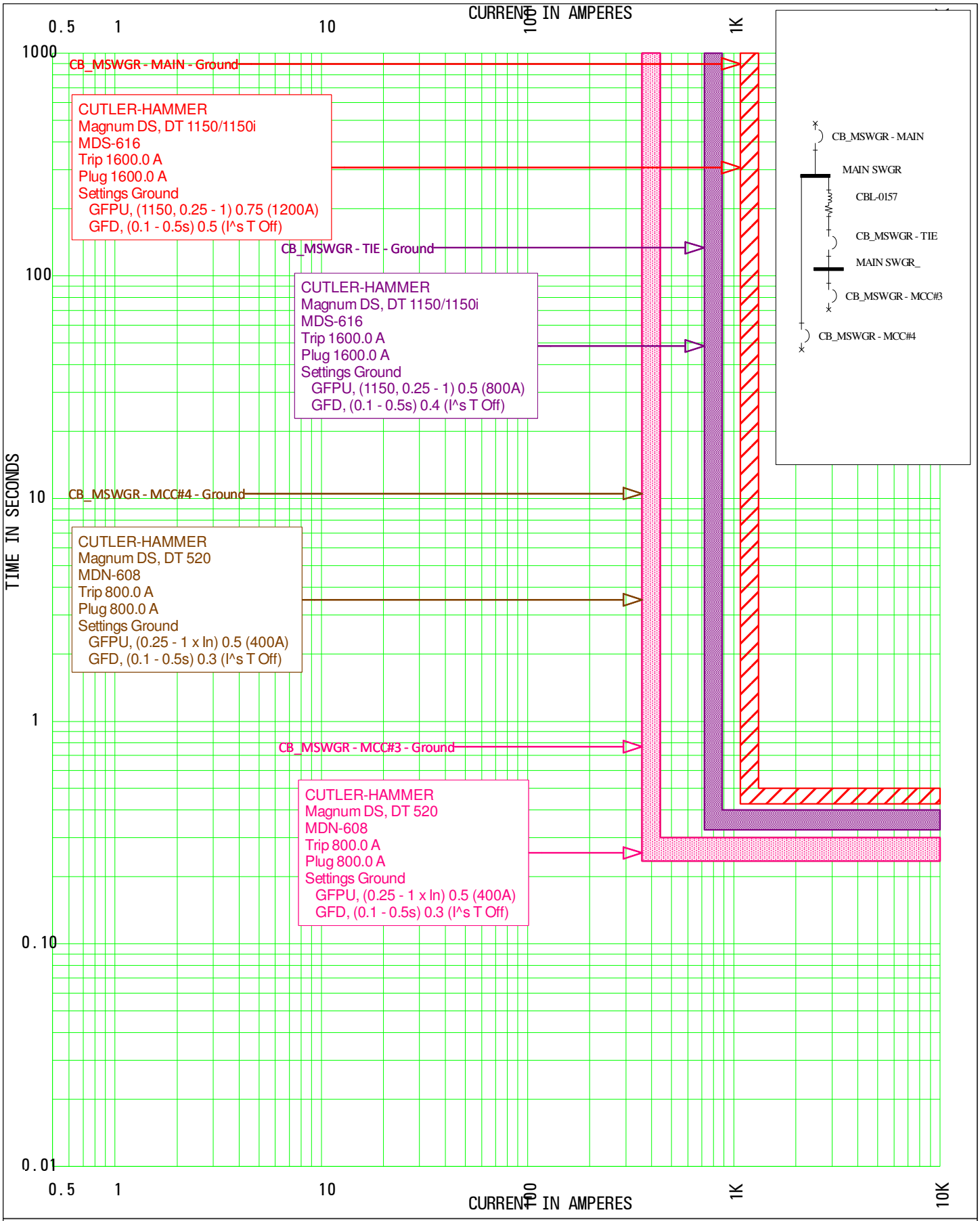

TCC Name: TCC_02

Current Scale x 1

Reference Voltage: 480V
Springfield Water & Sewer
1515 Granville Road

TCC_03 displays the coordination up to 5.7kA between the generator circuit breakers and the largest feeder breakers in the main switchgear.

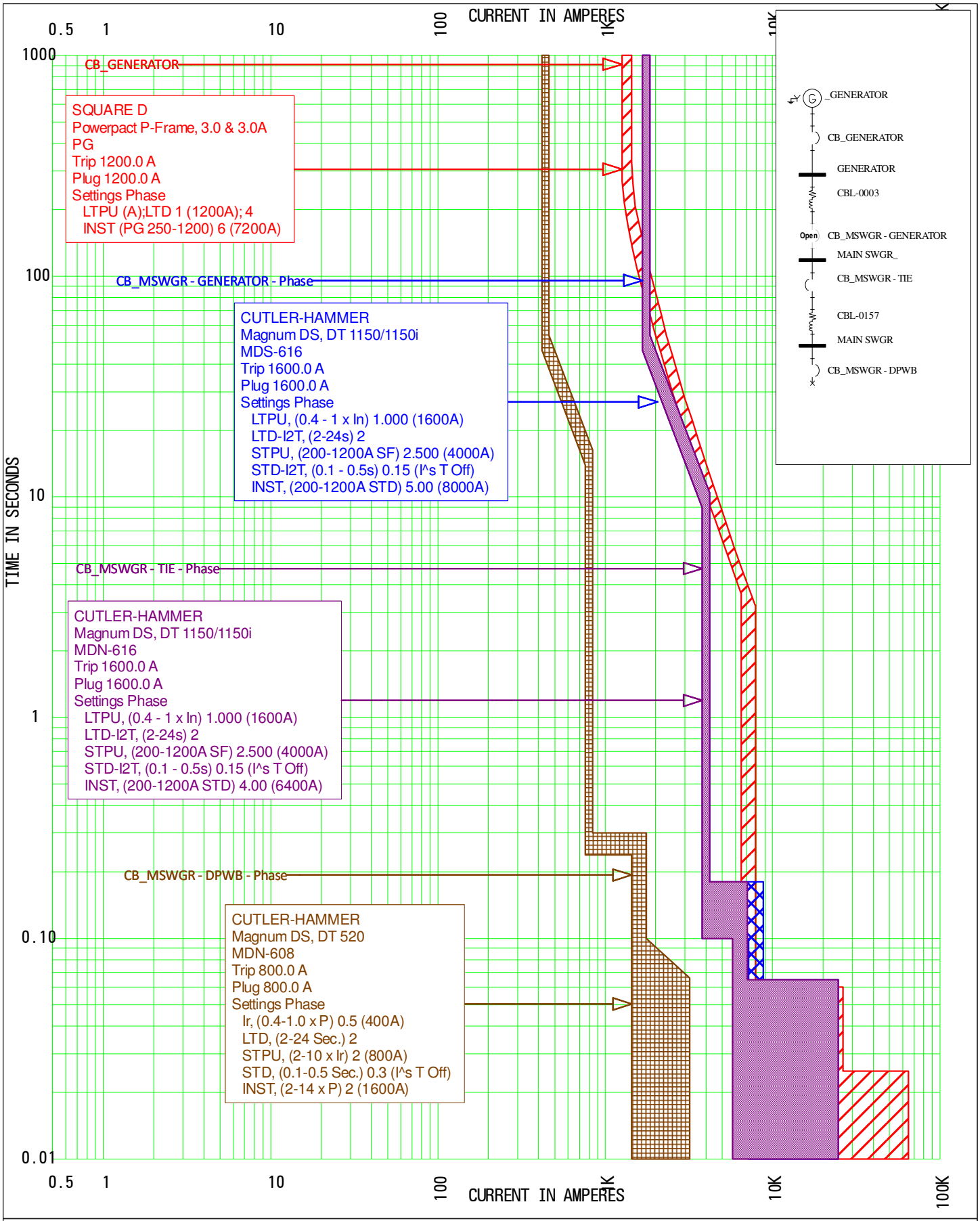

TCC Name: TCC_03

Current Scale x 1

Reference Voltage: 480V
Springfield Water & Sewer
1515 Granville Road

TCC_04 displays the ground fault settings for the generator and switchgear breakers. The breakers are coordinated between the generator breaker and the largest feeder breakers.

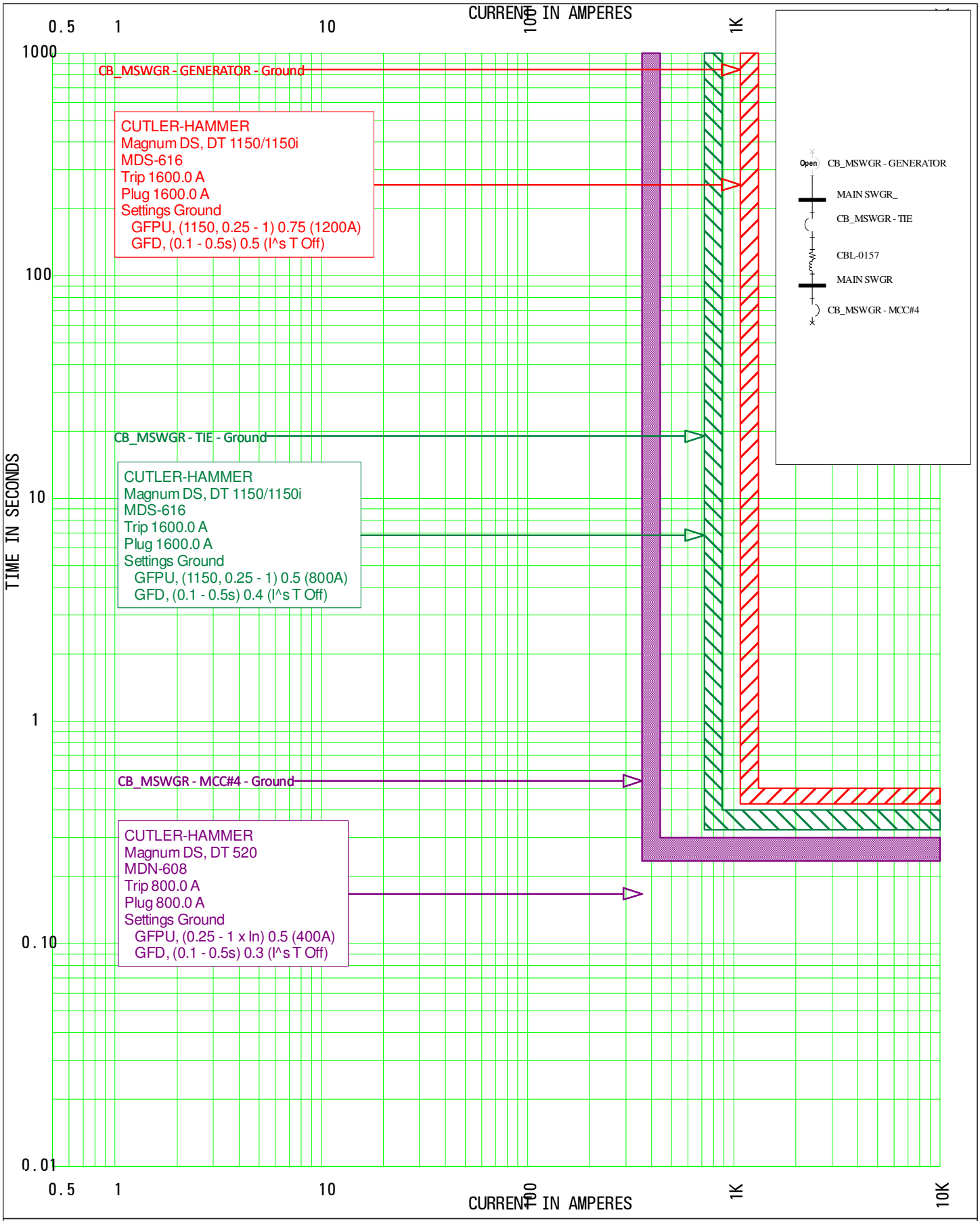

TCC Name: TCC_04

Current Scale x 1

Reference Voltage: 480V
Springfield Water & Sewer
1515 Granville Road

TCC_05 displays the mis-coordination between the feeder breaker in the main switchgear to the feeder breakers in PP-5. In the event of a fault downstream of PP-5, the breaker feeding PP-5 has the potential to trip prior to the breaker closest to the fault. The settings adjustments seen in TCC_05-NEW provide better protection and reduce the chance of a nuisance operation. The following setting adjustments are used for the arc flash calculations and shall be adjusted prior to applying labels.

CB_MSWGR – PP-5
STPU: 2 → 4
STD: 0.2 → 0.5

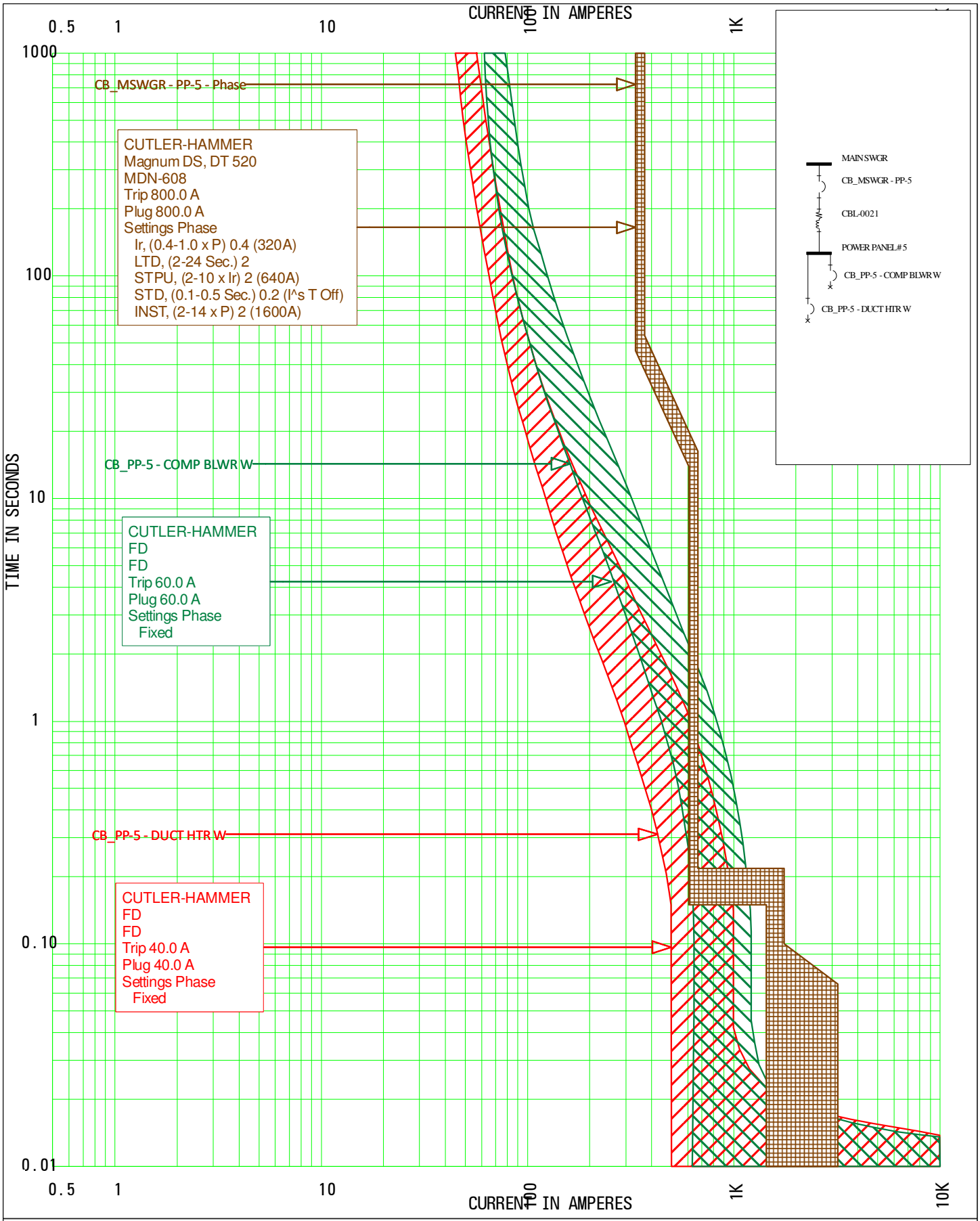

TCC Name: TCC_05

Current Scale x 1

Reference Voltage: 480V
Springfield Water & Sewer
1515 Granville Road

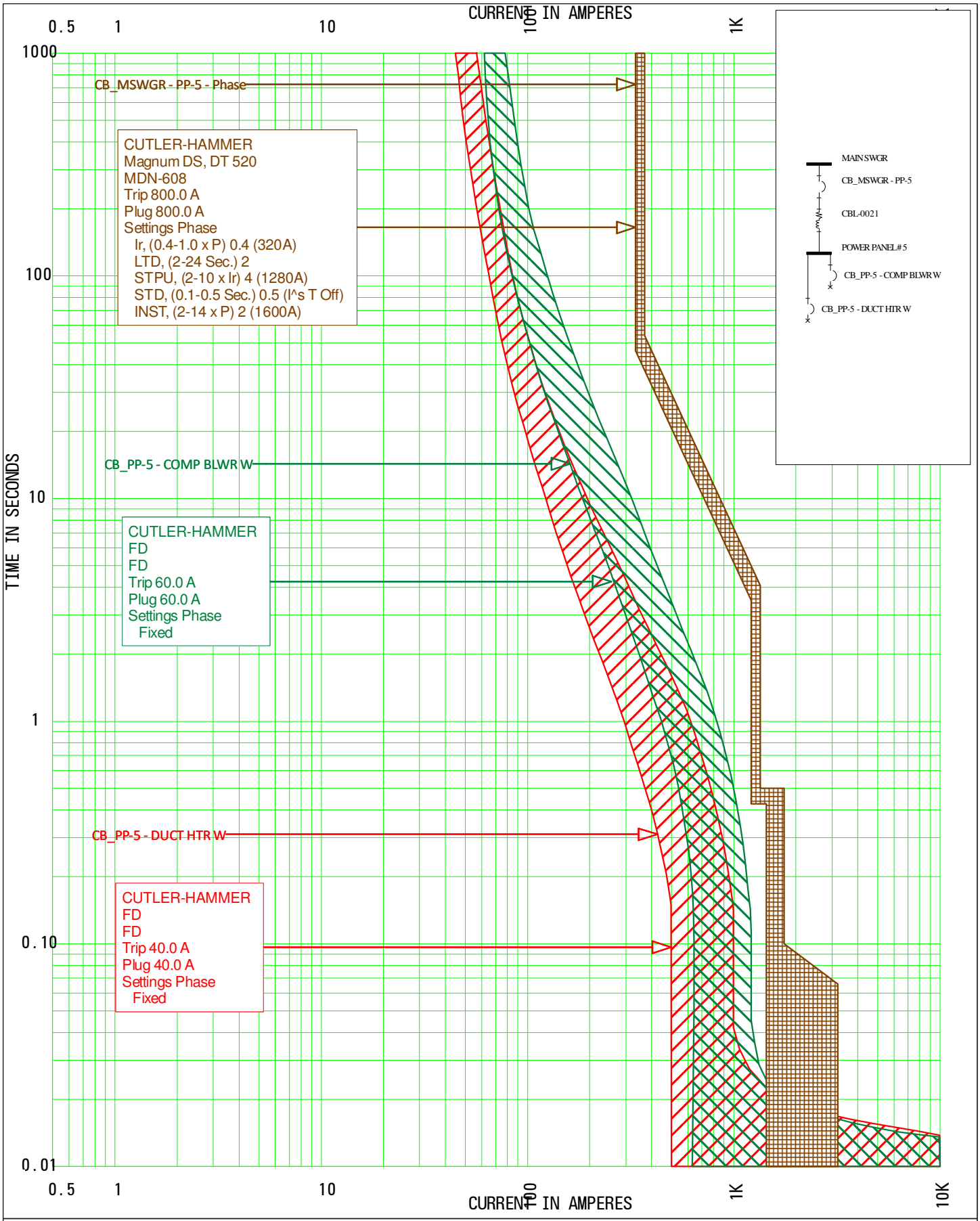

TCC Name: TCC_05 NEW

Current Scale x 1

Reference Voltage: 480V
Springfield Water & Sewer
1515 Granville Road

TCC_06 displays the mis-coordination between the feeder breaker in the main switchgear to the feeder breakers in MCC#4. In the event of a fault downstream of MCC#4, the breaker feeding MCC#4 has the potential to trip prior to the breaker closest to the fault. The settings adjustments seen in TCC_06-NEW provide better protection and reduced chance of nuisance tripping. The following setting adjustments are used for the arc flash calculations and shall be adjusted prior to applying labels.

CB_MSWGR – MCC#4
LTD: 2 → 4
STPU: 2 → 4
INST: 2 → 3

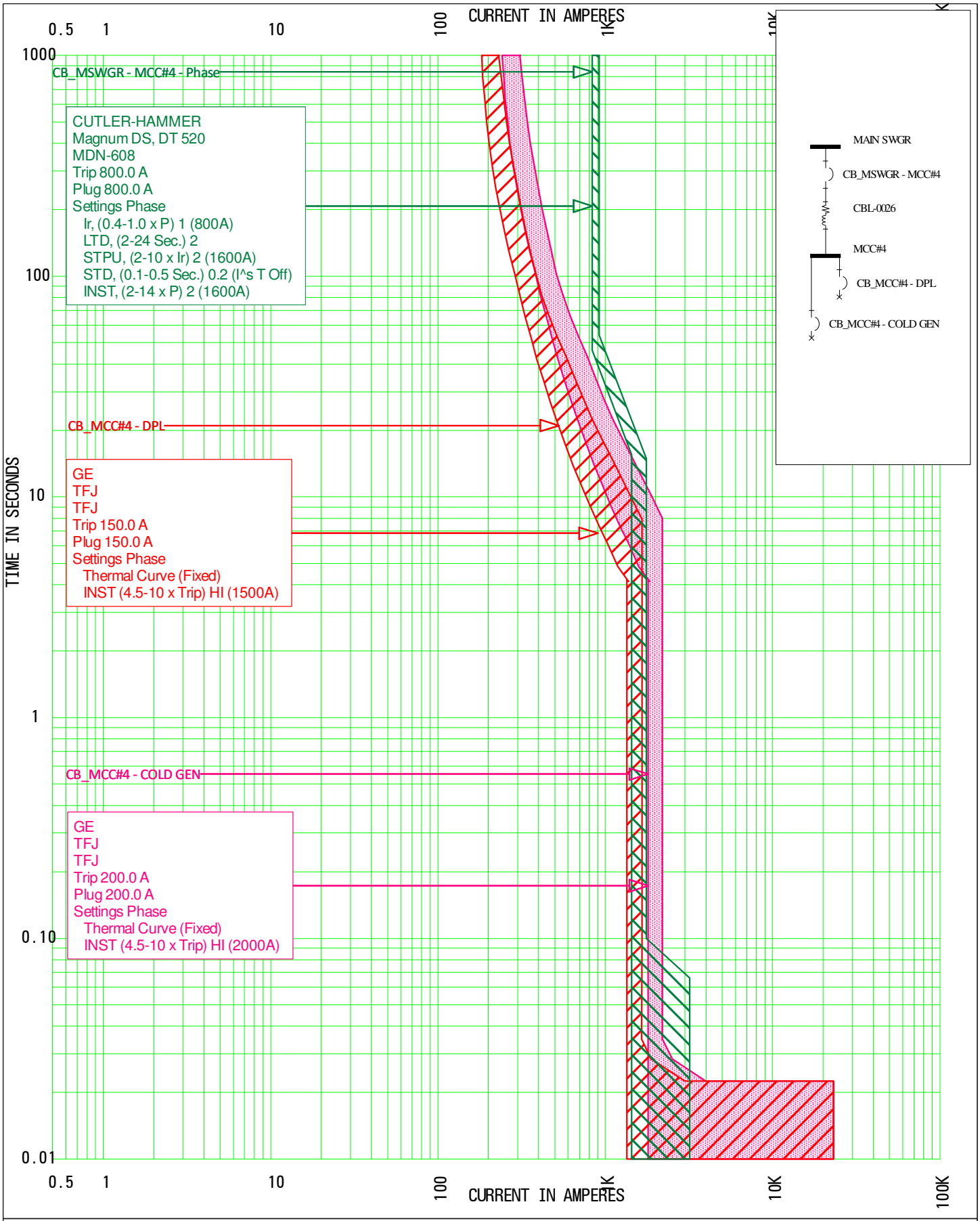

TCC Name: TCC_06

Current Scale x 1

Reference Voltage: 480V
Springfield Water & Sewer
1515 Granville Road

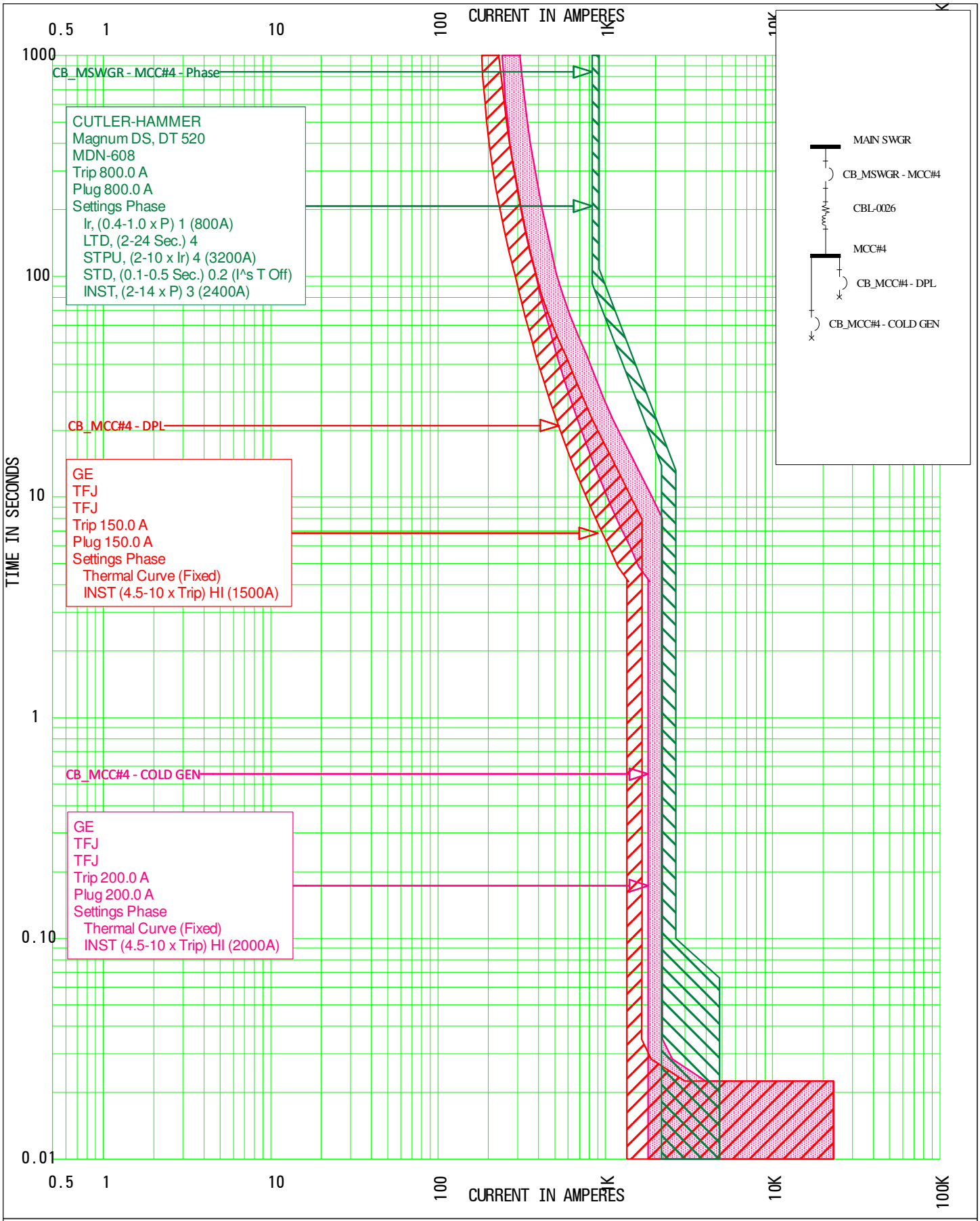

TCC Name: TCC_06 NEW

Current Scale x 1

Reference Voltage: 480V
Springfield Water & Sewer
1515 Granville Road

TCC_07 displays the mis-coordination between the feeder breaker in the main switchgear, the main breaker in DPWB and the feeder breakers in DPWB. In the event of a fault downstream of DPWB, the breakers feeding DPWB has the potential to trip prior to the breaker closest to the fault. The settings adjustments seen in TCC_07-NEW provide better protection and reduced chance of nuisance tripping. The following setting adjustments are used for the arc flash calculations and shall be adjusted prior to applying labels.

CB_MSWGR - DPWB
LTD: 2 → 7
STPU: 2 → 6
INST: 2 → 3

CB_DPWB – MAIN
LTD(tr): 0.5 → 8
STPU(lsd): 1.5 → 6.5
STD(tsd): 0 → 0.3
INST(li): 1.5 → 5.5
GFPU(lg): 0.2 → 0.5
GFD (tg): 0 → 0.3

CB_DPWB – BUILDING 15-18
LTPU(lr): 100 →45
LTD(tr): 0.5 → 16
STPU(lsd): 1.5 → 10
STD(tsd): 0 → 0.4
INST(li): 1.5 → 12
GFPU(lg): 0.2 → 1
GFD (tg): 0 → 0.2

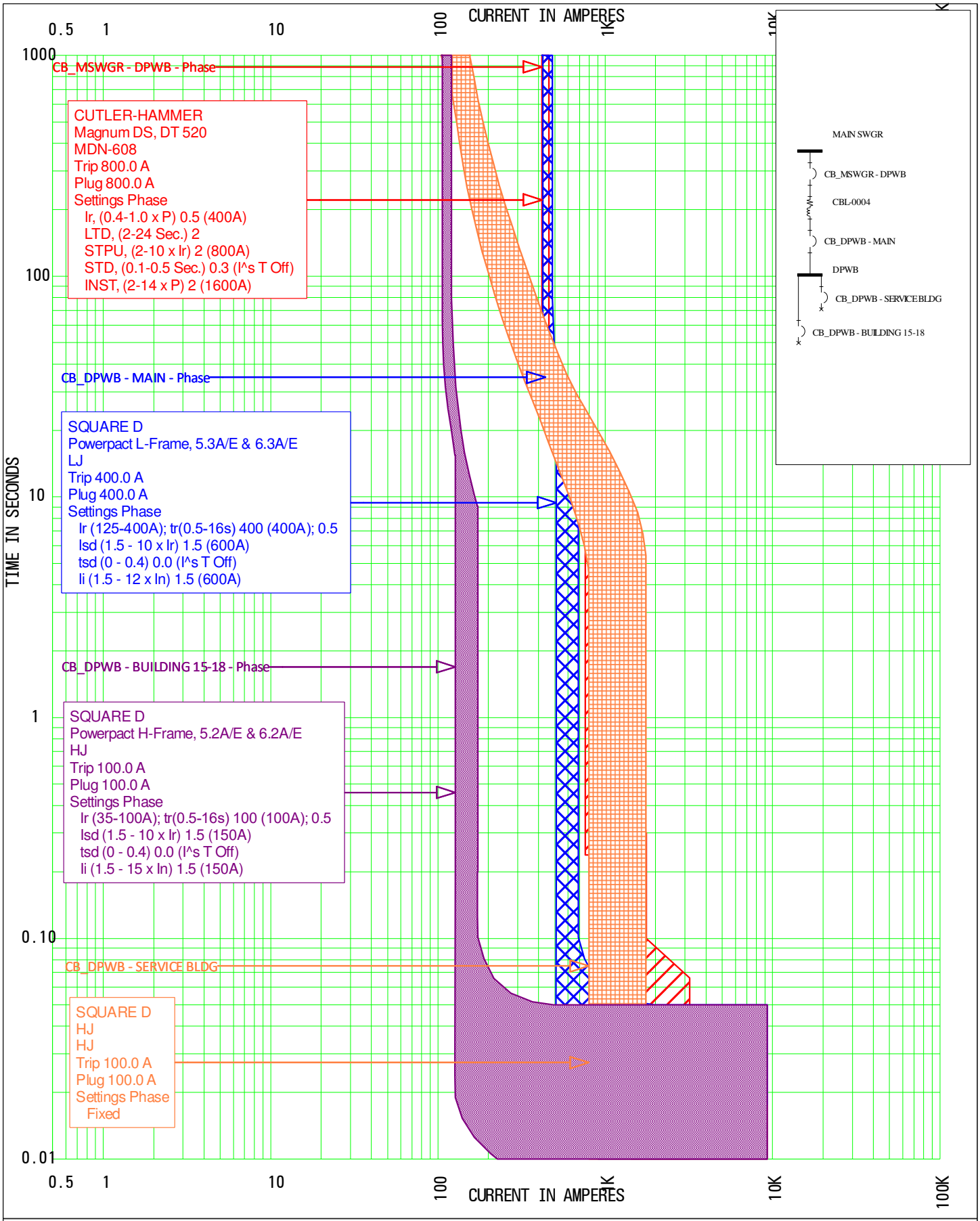

TCC Name: TCC_07

Current Scale x 1

Reference Voltage: 480V
Springfield Water & Sewer
1515 Granville Road

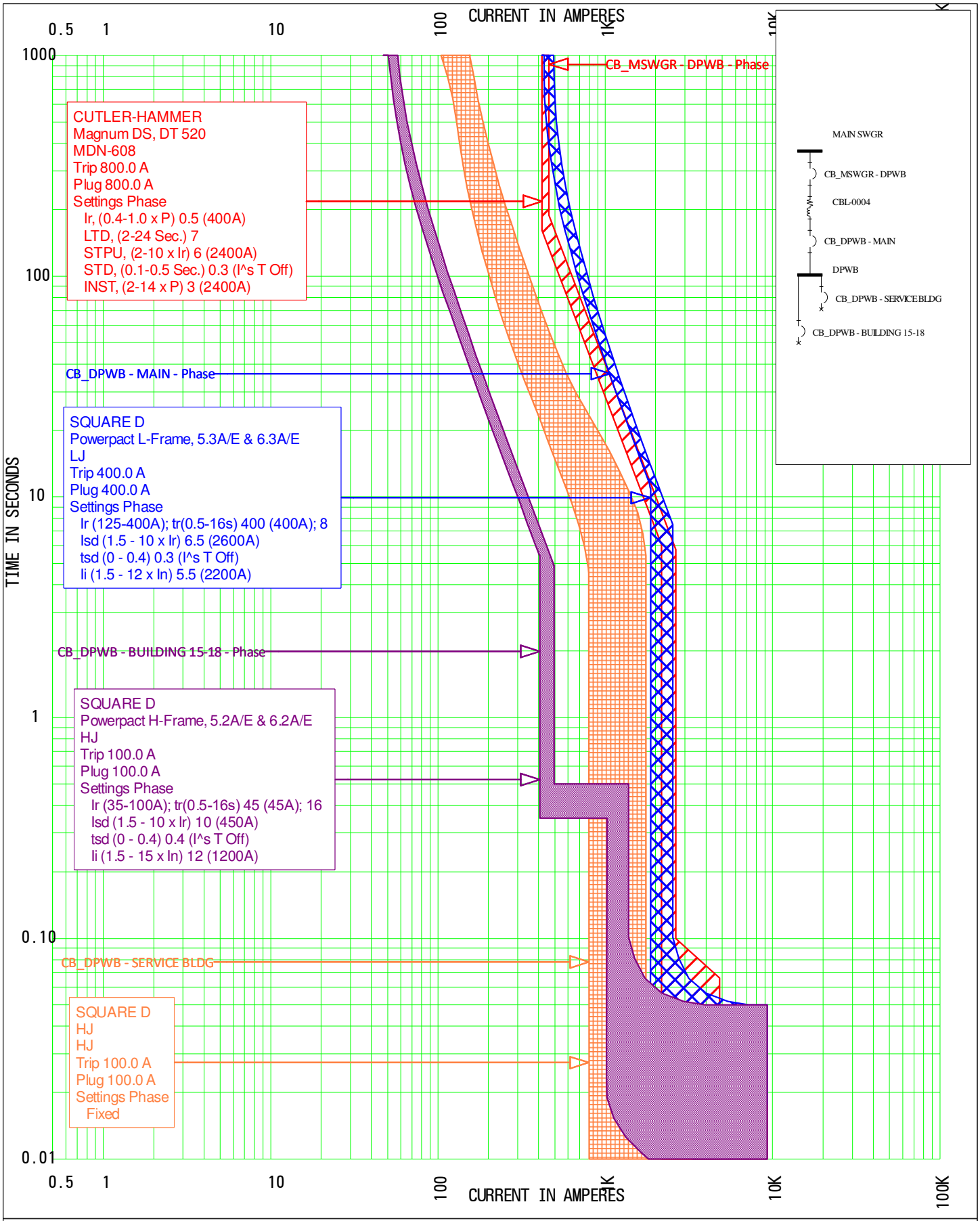

TCC Name: TCC_07_NEW

Current Scale x 1

Reference Voltage: 480V
Springfield Water & Sewer
1515 Granville Road

TCC_08 displays the mis-coordination between the feeder breaker in the main switchgear to the feeder breakers in EMCC. In the event of a fault downstream of EMCC, the breaker feeding EMCC has the potential to trip prior to the breaker closest to the fault. The settings adjustments seen in TCC_08-NEW provide better protection and reduced chance of nuisance tripping. The following setting adjustments are used for the arc flash calculations and shall be adjusted prior to applying labels.

CB_MSWGR - EMCC
LTD: 2 → 7
STPU: 2 → 6
INST: 2 → 3

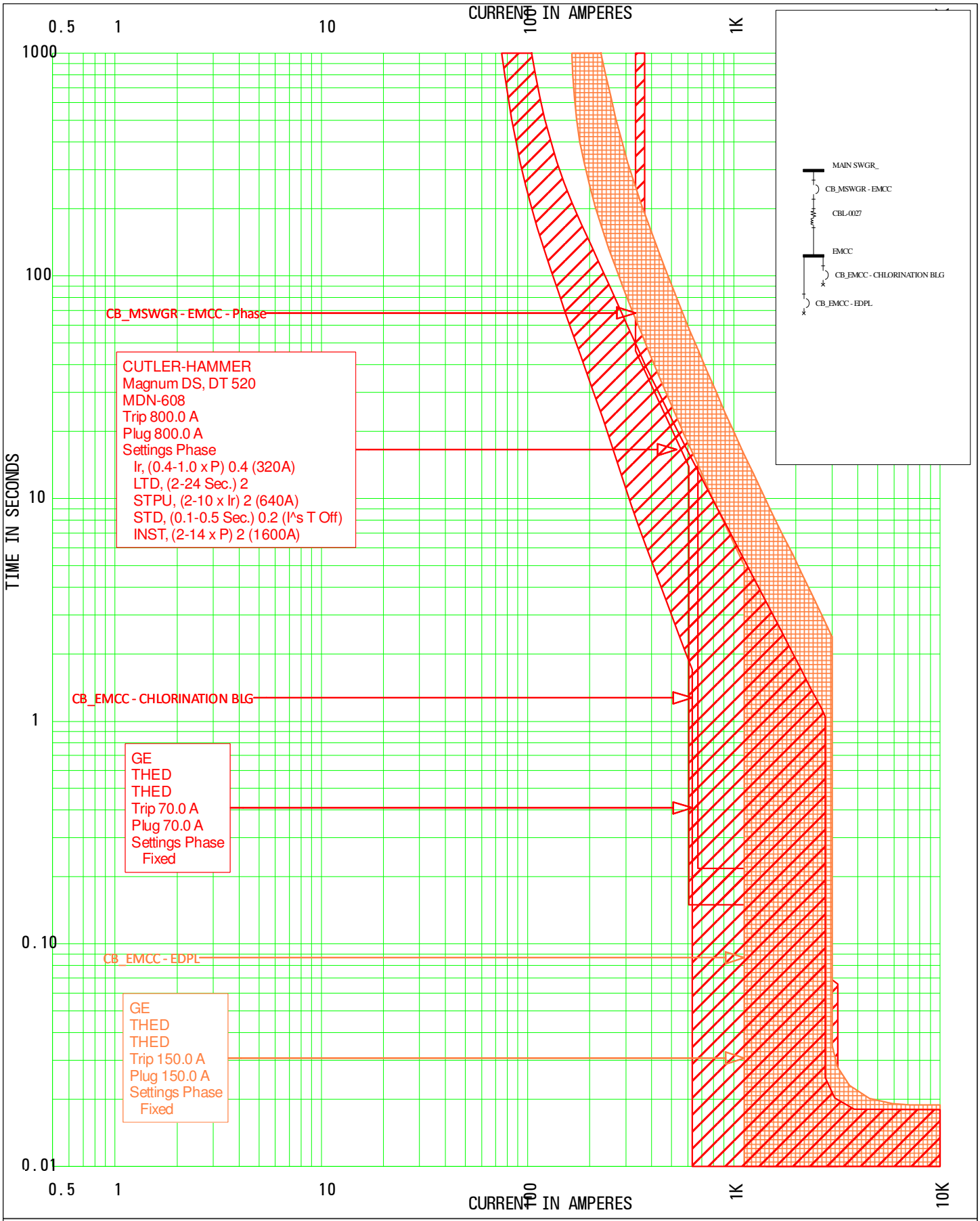

TCC Name: TCC_08

Current Scale x 1

Reference Voltage: 480V
Springfield Water & Sewer
1515 Granville Road

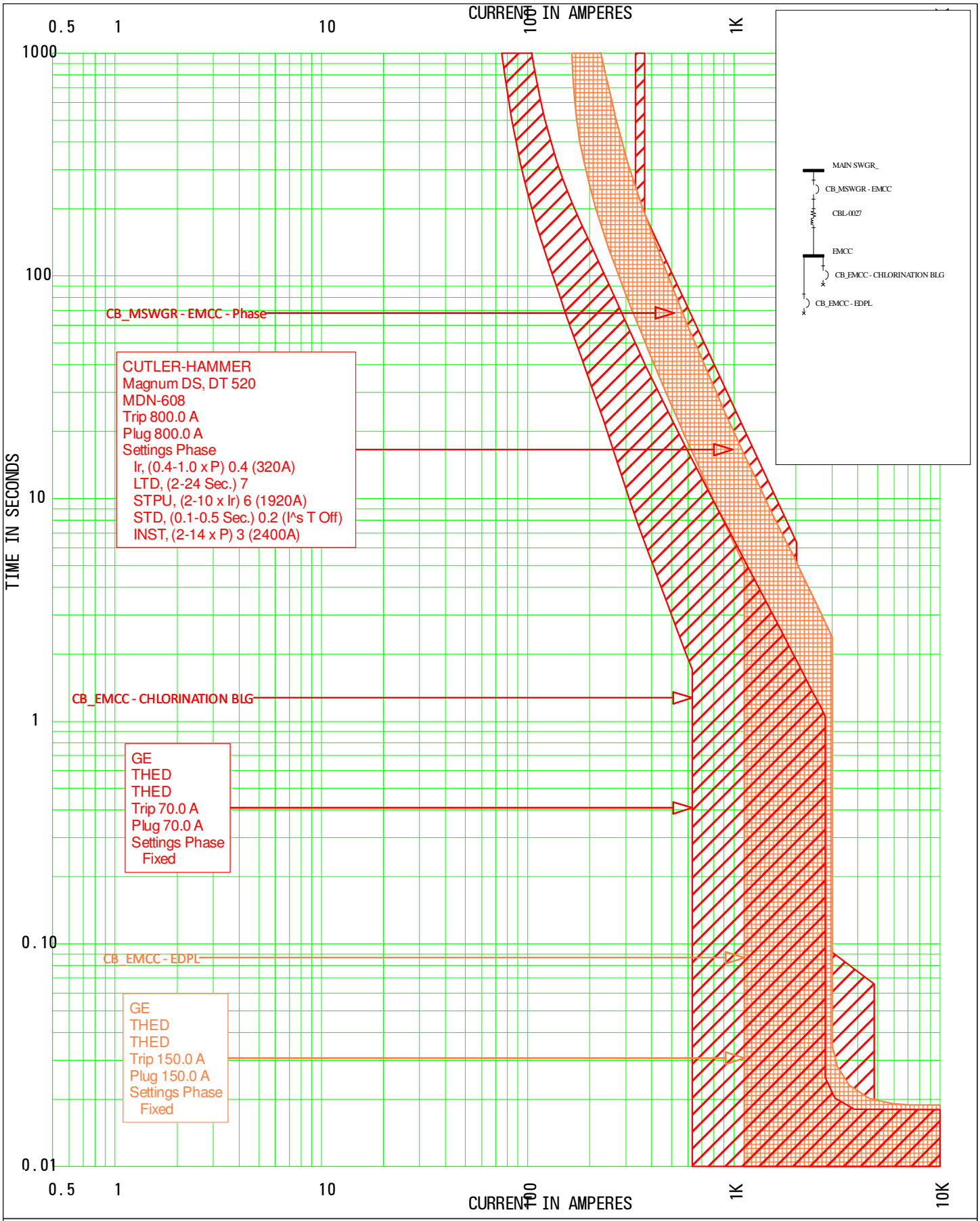

TCC Name: TCC_08_NEW

Current Scale x 1

Reference Voltage: 480V
Springfield Water & Sewer
1515 Granville Road

TCC_09 displays the coordination between the feeder in the main switchgear with main breaker in MCC#1. These breakers are not required to be coordinated since they are in series however, the feeder breaker in the main switchgear could be increased to ensure better protection with the downstream feeder breakers in MCC#1. If nuisance operations occur, it is advised to review the completed coordination around MCC#1 and not just the protective devices pertinent to this Arc Flash Study.

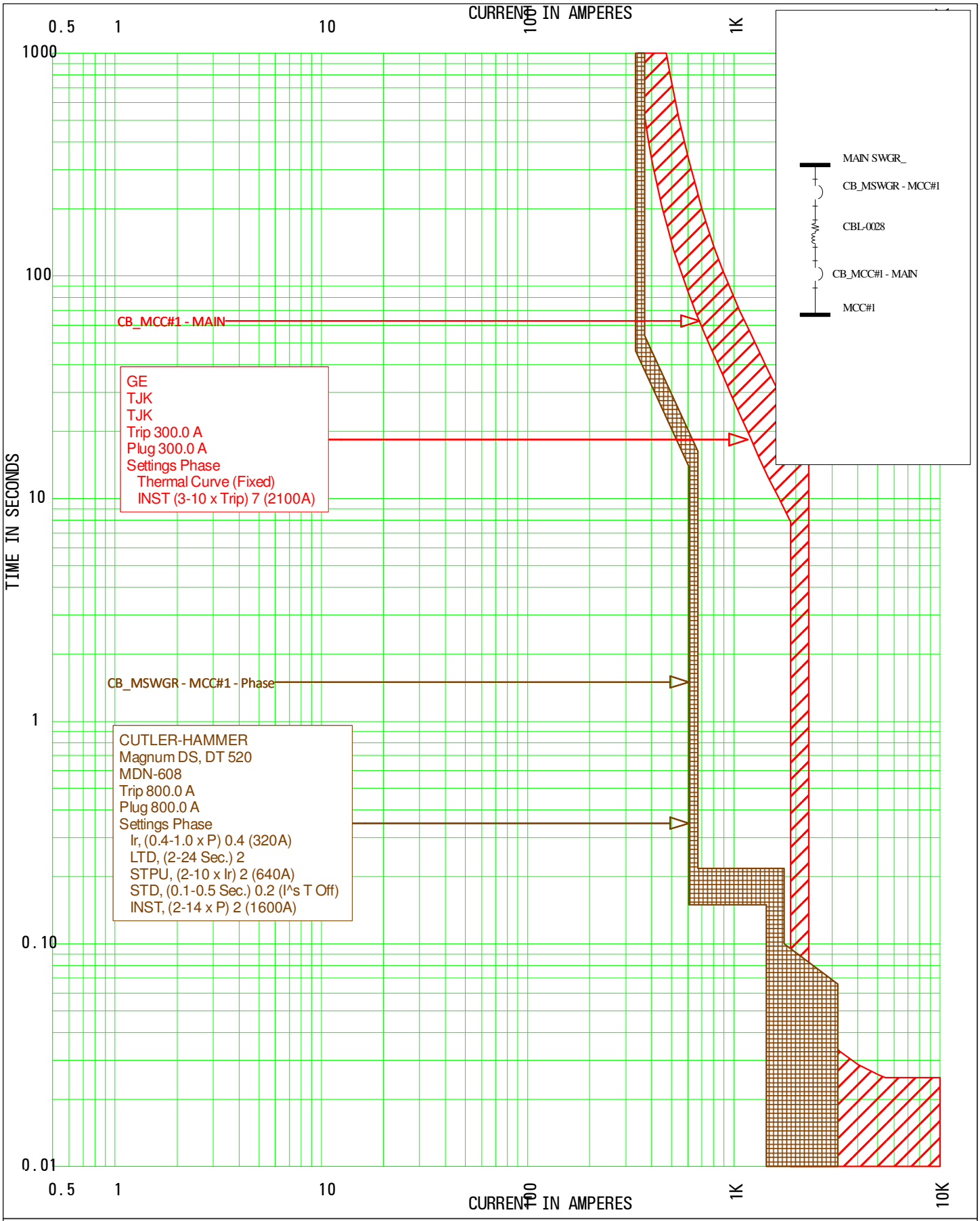

TCC Name: TCC_09

Current Scale x 1

Reference Voltage: 480V
Springfield Water & Sewer
1515 Granville Road

TCC_10 displays the coordination between the feeder in the main switchgear with main breaker in MCC#2. These breakers are not required to be coordinated since they are in series however, the feeder breaker in the main switchgear could be increased to ensure better protection with the downstream feeder breakers in MCC#2. If nuisance operations occur, it is advised to review the completed coordination around MCC#2 and not just the protective devices pertinent to this Arc Flash Study.

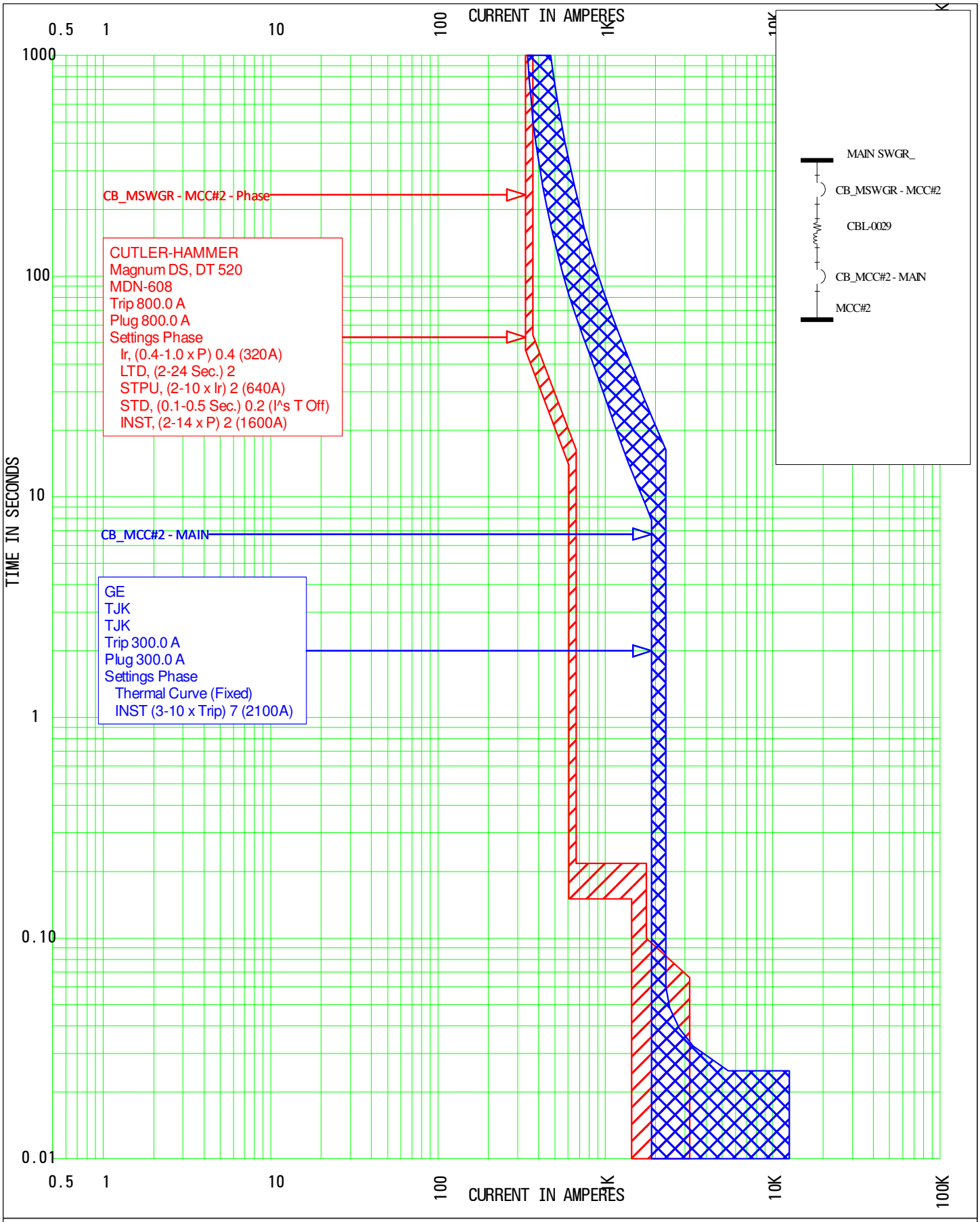

TCC Name: TCC_10

Current Scale x 1

Reference Voltage: 480V
Springfield Water & Sewer
1515 Granville Road

TCC_11 displays the mis-coordination between the feeder breaker in the main switchgear, main breaker for MCC#3 and the feeder breakers in MCC#3. In the event of a fault downstream of MCC#3, the breaker feeding MCC#3 has the potential to trip prior to the breaker closest to the fault. The settings adjustments seen in TCC_11-NEW provide better protection and reduced chance of nuisance tripping. The following setting adjustments are used for the arc flash calculations and shall be adjusted prior to applying labels.

CB_MSWGR – MCC#3
LTD: 2 → 7
STPU: 2.5 → 6
INST: 3 → 4

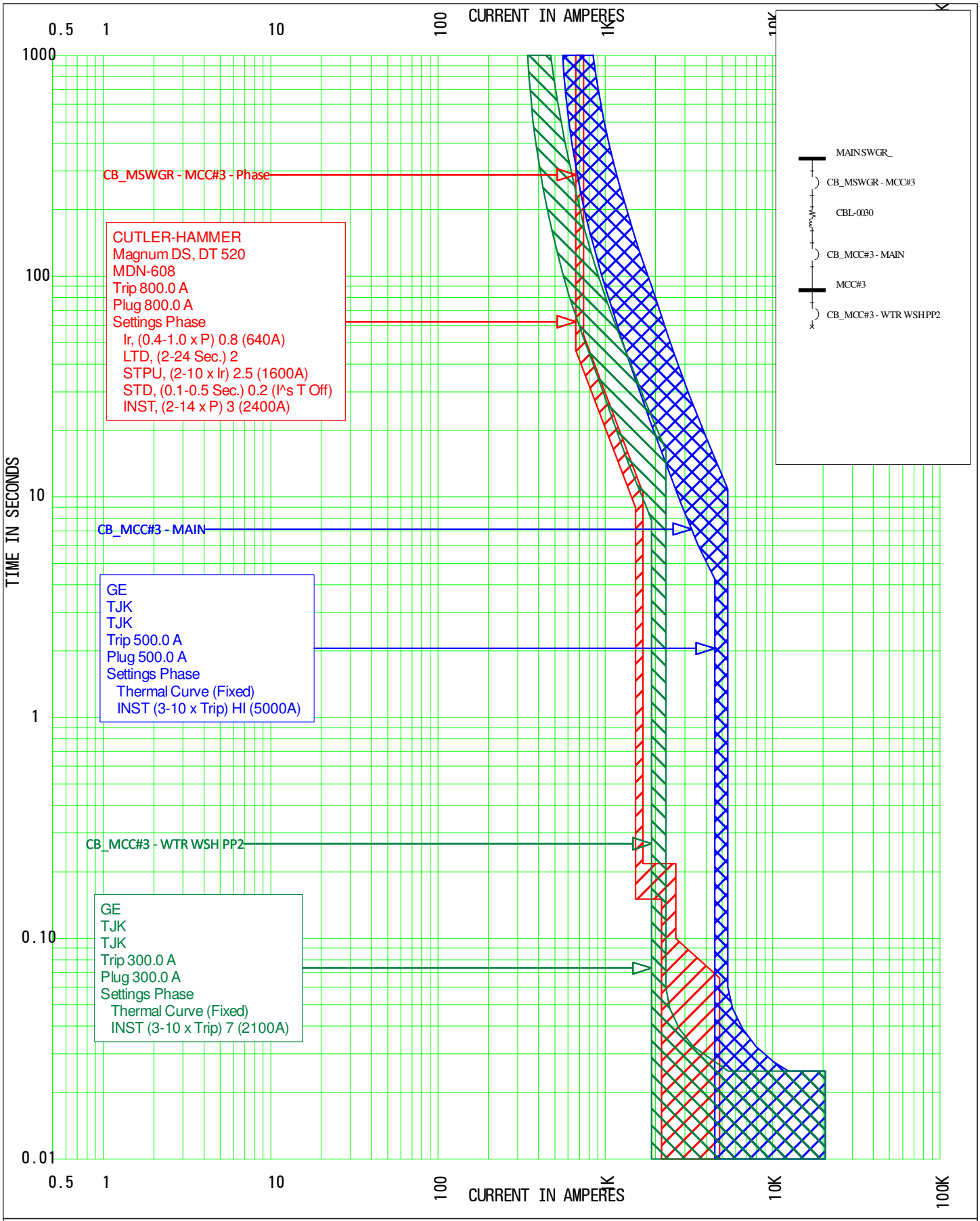

TCC Name: TCC_11

Current Scale x 1

Reference Voltage: 480V
Springfield Water & Sewer
1515 Granville Road

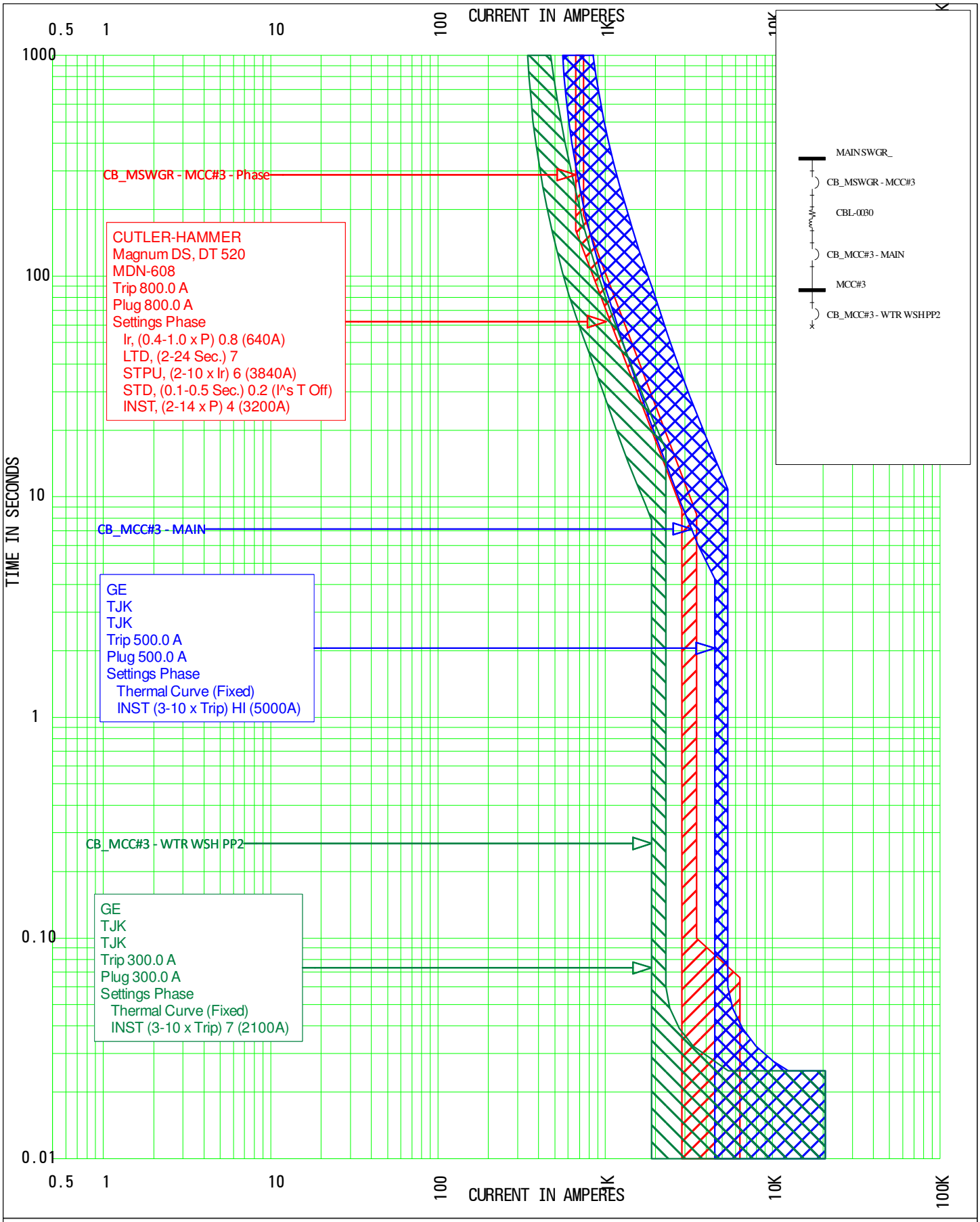

TCC Name: TCC_11 NEW

Current Scale x 1

Reference Voltage: 480V
Springfield Water & Sewer
1515 Granville Road

TCC_12 displays the coordination between the feeder breaker in EMCC and the largest feeder breaker in panel EPH. Mis-coordination exists in the instantaneous region above 570A. The existing settings provide the best protection with the existing equipment.

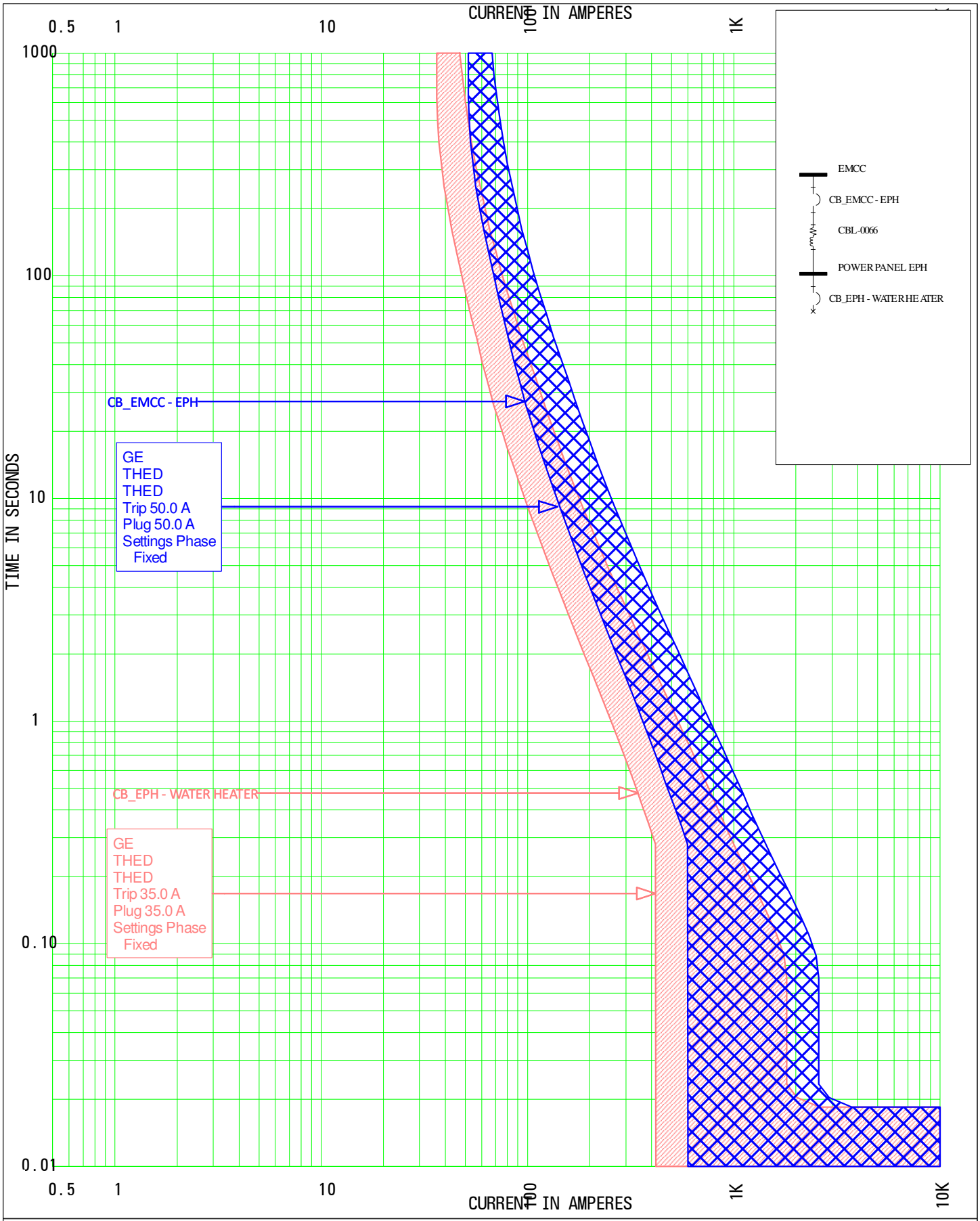

TCC Name: TCC_12

Current Scale x 1

Reference Voltage: 480V
Springfield Water & Sewer
1515 Granville Road

TCC_13 displays the coordination between the feeder breaker in EMCC, fuse in EDPL disconnect, main breaker in EDPL and largest feeder breaker in EDPL. The existing settings provide the best protection with the existing equipment. The transformer feeding EDPL is properly protected, however the in-rush current has the potential to trip the feeder breaker in EMCC. If a nuisance operation occurs during energization, a new breaker with adjustable settings should replace the existing fixed breaker.

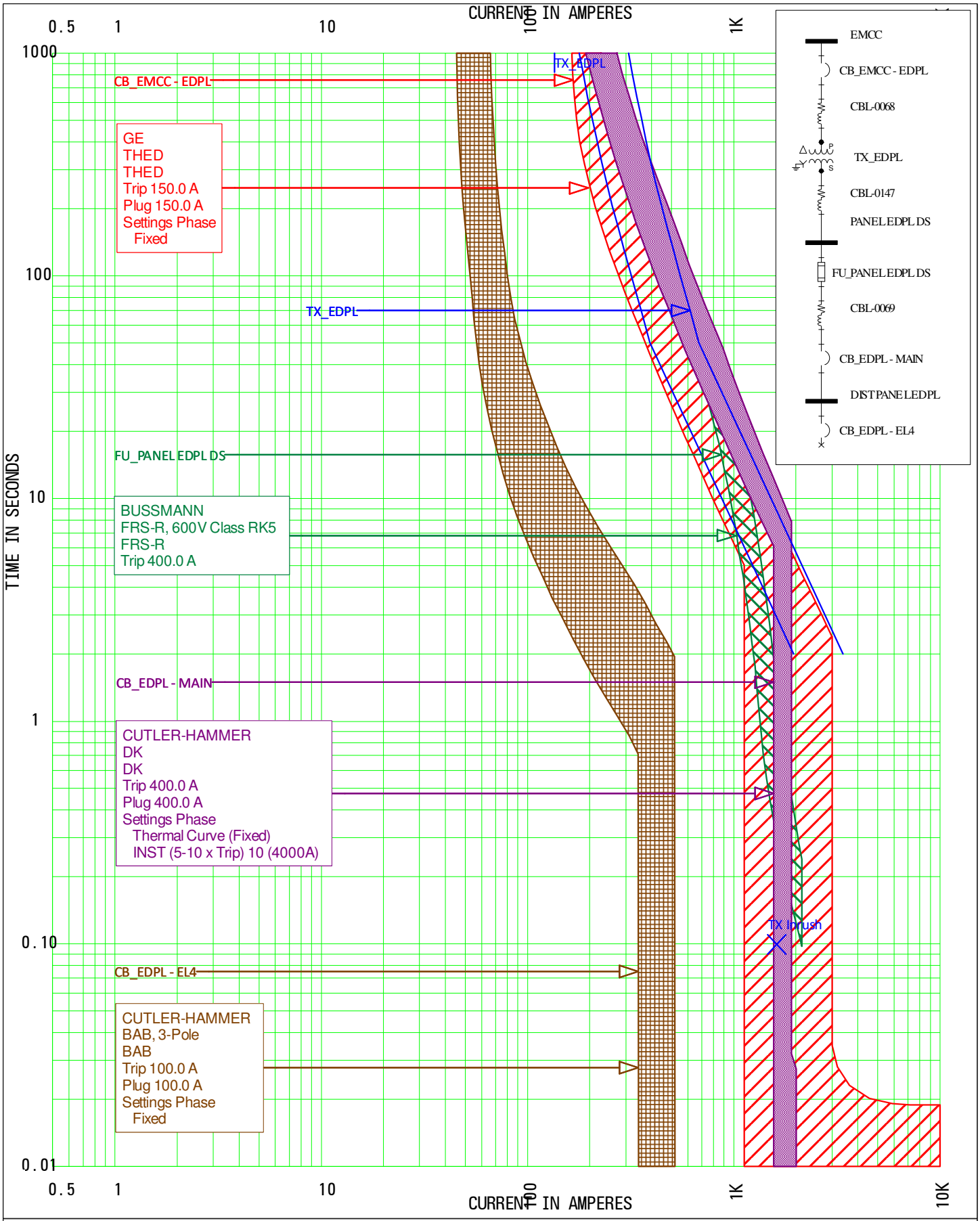

TCC Name: TCC_13

Current Scale x 1

Reference Voltage: 480V
Springfield Water & Sewer
1515 Granville Road

TCC_14 displays the coordination between the feeder breaker in EDPL and the largest feeder breaker in panel EL5. Mis-coordination exists in the instantaneous region above 430A. The existing settings provide the best protection with the existing equipment.

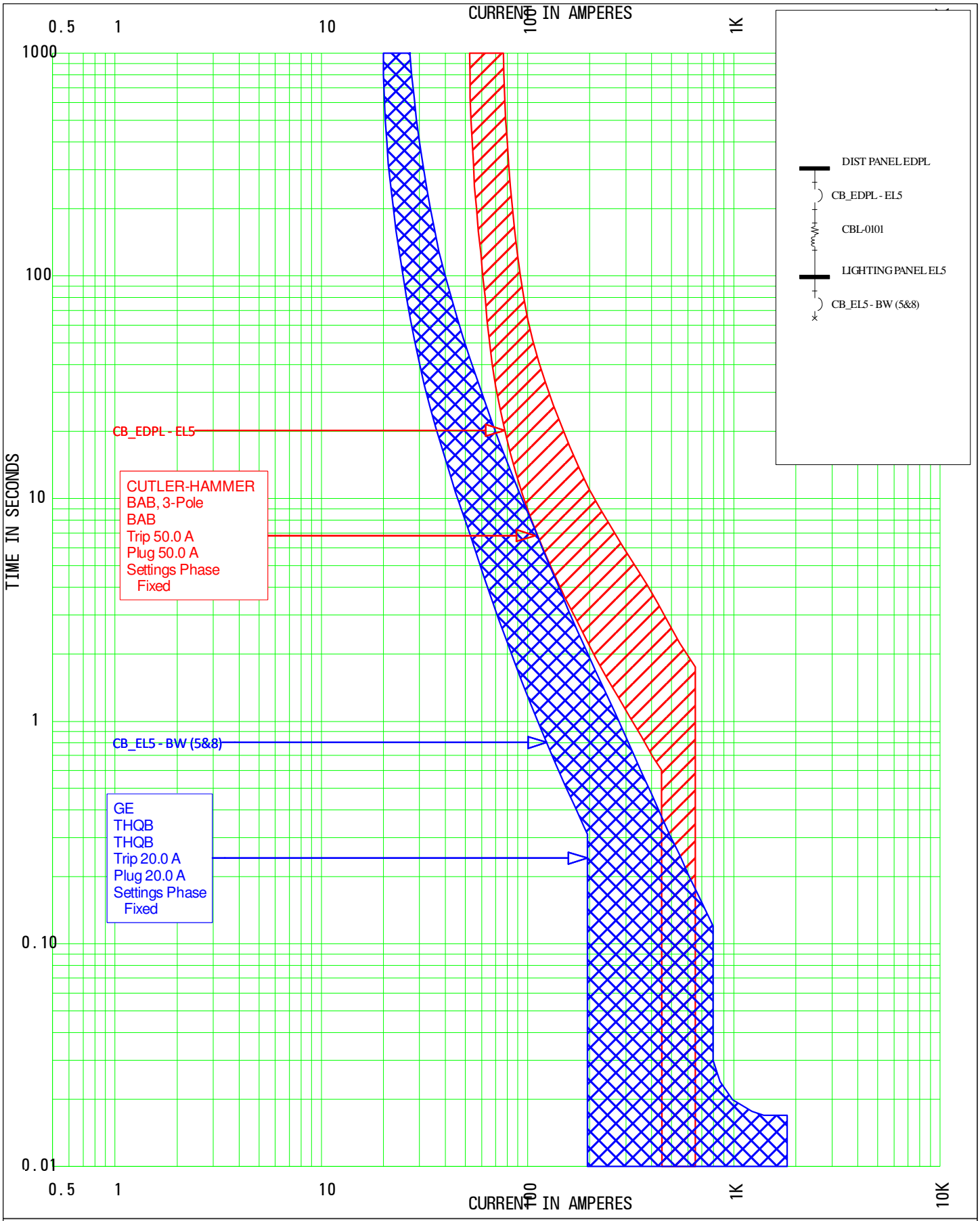

TCC Name: TCC_14

Current Scale x 1

Reference Voltage: 208V
Springfield Water & Sewer
1515 Granville Road

TCC_15 displays the coordination between the feeder breaker in EDPL and the largest feeder breaker in panel EL3. Mis-coordination exists in the instantaneous region above 800A. The existing settings provide the best protection with the existing equipment.

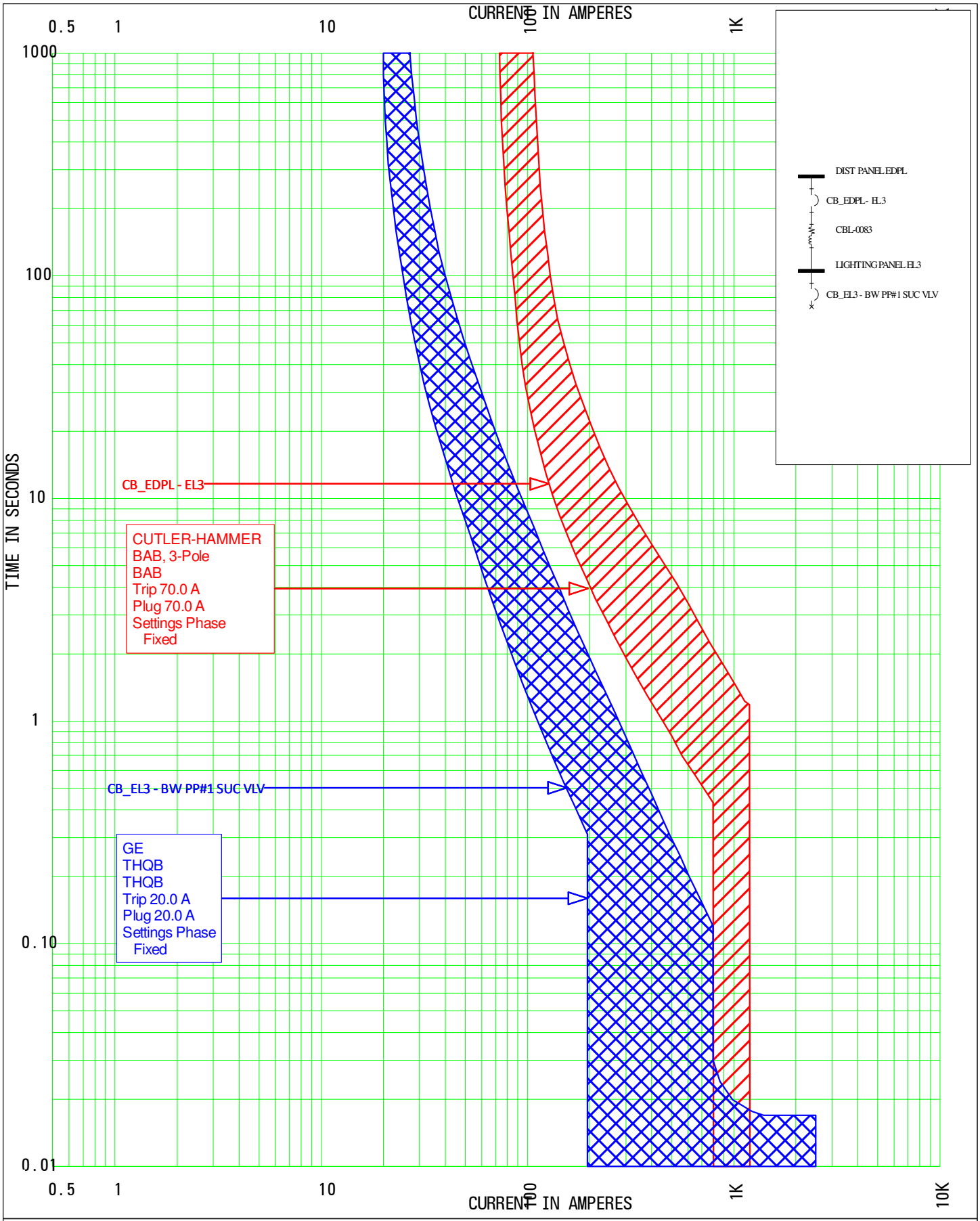

TCC Name: TCC_15

Current Scale x 1

Reference Voltage: 208V
Springfield Water & Sewer
1515 Granville Road

TCC_16 displays the coordination between the feeder breaker in EMCC and fuse in LCB disconnect. These protective devices are not required to be coordinated since they are in series. The transformer feeding LCB is properly protected, however the in-rush current has the potential to trip the feeder breaker in EMCC. If a nuisance operation occurs during energization, a new breaker with adjustable settings should replace the existing fixed breaker.

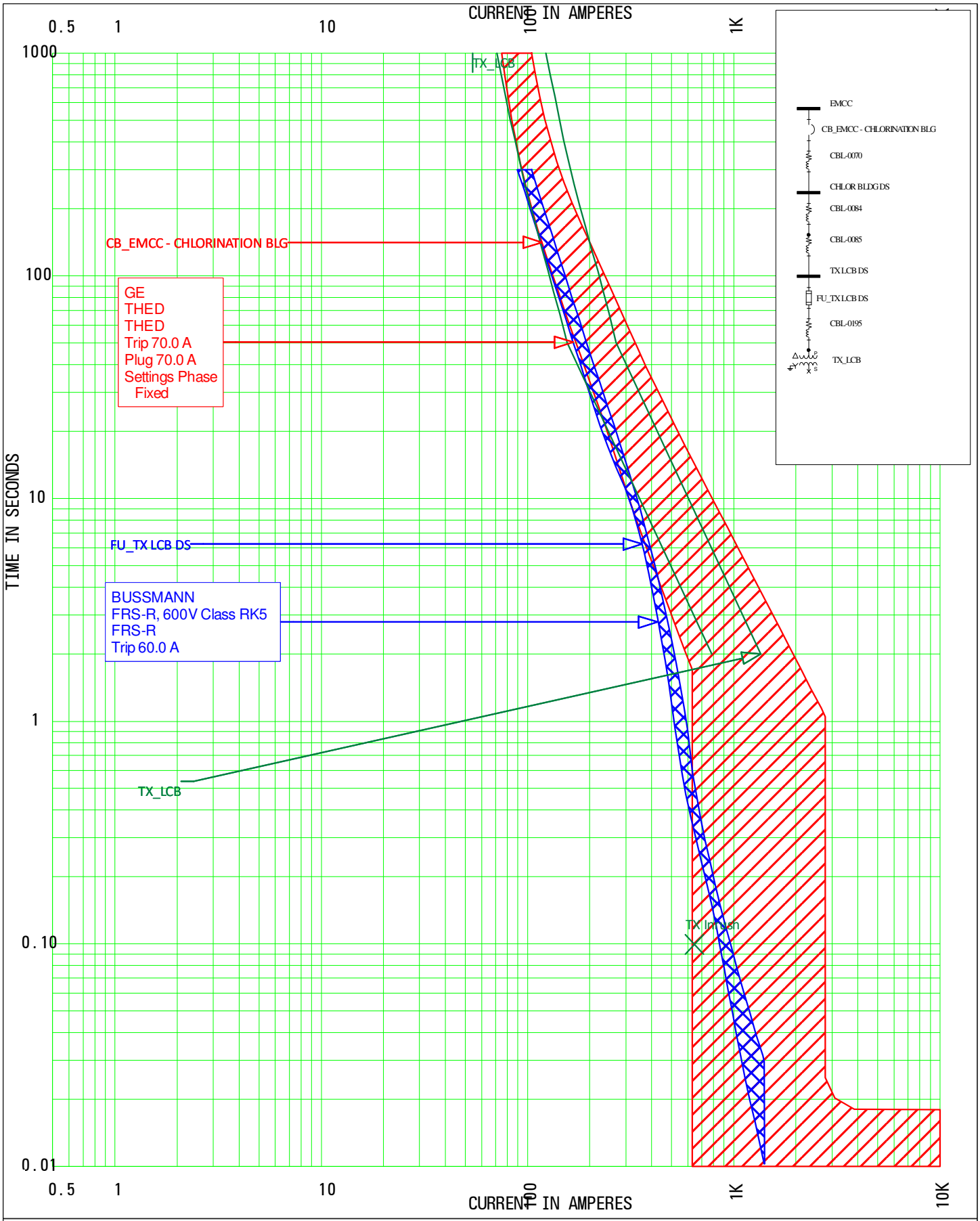

TCC Name: TCC_16

Current Scale x 1

Reference Voltage: 480V
Springfield Water & Sewer
1515 Granville Road

TCC_17 displays the coordination between the feeder breaker in MCC#4, fuse in DPL disconnect, main breaker in DPL and largest feeder breakers in DPL. The existing settings provide the best protection with the existing equipment. The transformer feeding DPL is properly protected however, the in-rush current has the potential to trip the feeder breaker in MCC#4. If a nuisance operation occurs during energization, a new breaker with adjustable settings should replace the existing fixed breaker.

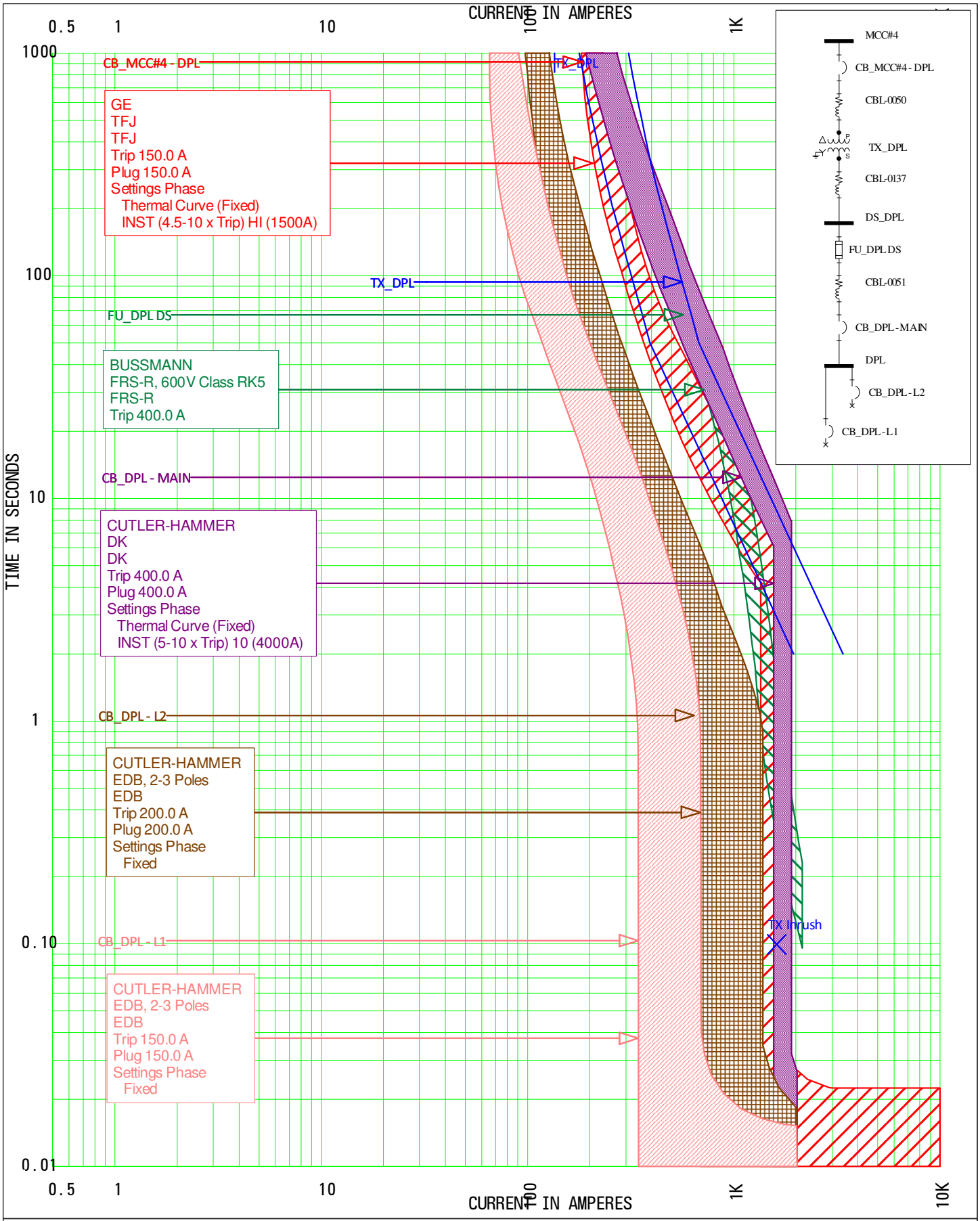

TCC Name: TCC_17

Current Scale x 1

Reference Voltage: 480V
Springfield Water & Sewer
1515 Granville Road

TCC_18 displays the coordination between the feeder breaker in DPWB, fuse in 480V Service Building disconnect and fuse in 208V Service Building disconnect. These protective devices are not required to be coordinated since they are in series. The Service Building transformer is properly protected however, the in-rush current has the potential to trip the feeder breaker in DPWB. If a nuisance operation occurs during energization, a new breaker with adjustable settings should replace the existing fixed breaker.

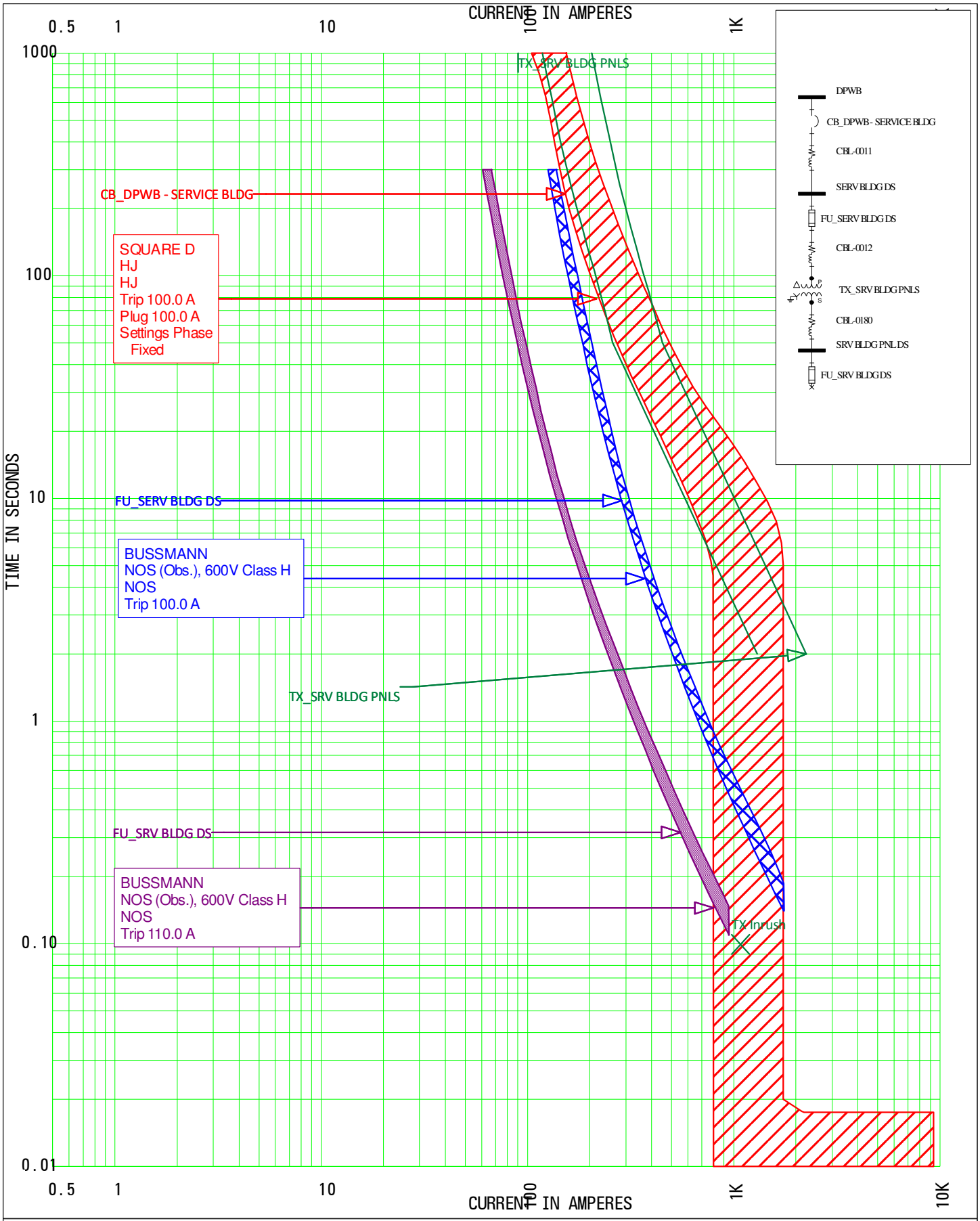

TCC Name: TCC_18

Current Scale x 1

Reference Voltage: 480V
Springfield Water & Sewer
1515 Granville Road

TCC_19 displays the coordination between the feeder breaker in DPWB, main breaker in the Garage Panel and largest feeder breaker in the Garage Panel. The existing settings provide the best protection with the existing equipment. The transformer feeding the Garage Panel is properly protected however, the in-rush current has the potential to trip the feeder breaker in DPWB. If a nuisance operation occurs during energization, a new breaker with adjustable settings should replace the existing fixed breaker.

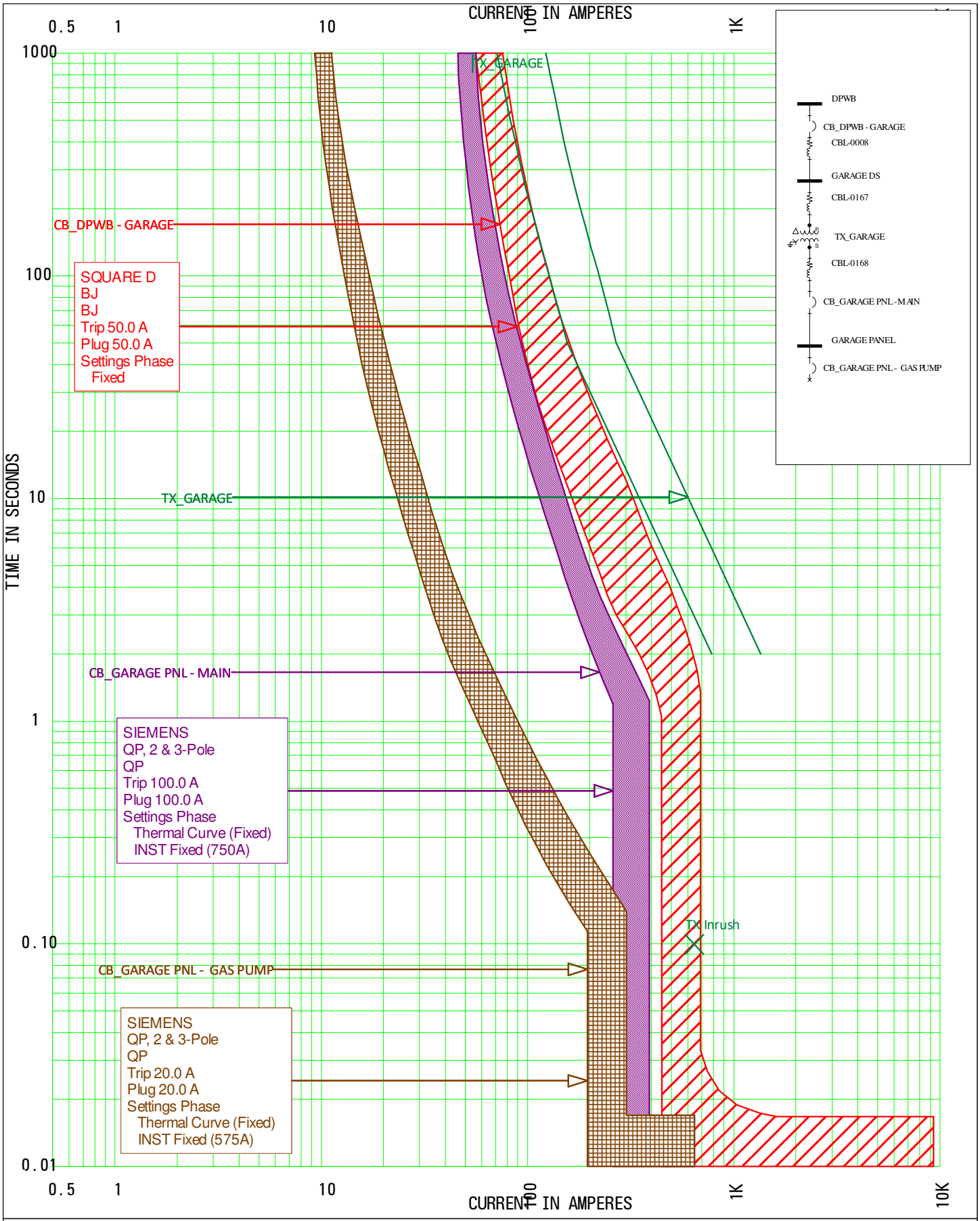

TCC Name: TCC_19

Current Scale x 1

Reference Voltage: 480V
Springfield Water & Sewer
1515 Granville Road

TCC_20 displays the coordination between the feeder breaker in DPWB, main breaker in HVRH and the largest feeder breaker in HVRH. Mis-coordination exists in the instantaneous region above 440A. The existing settings provide the best protection with the existing equipment.

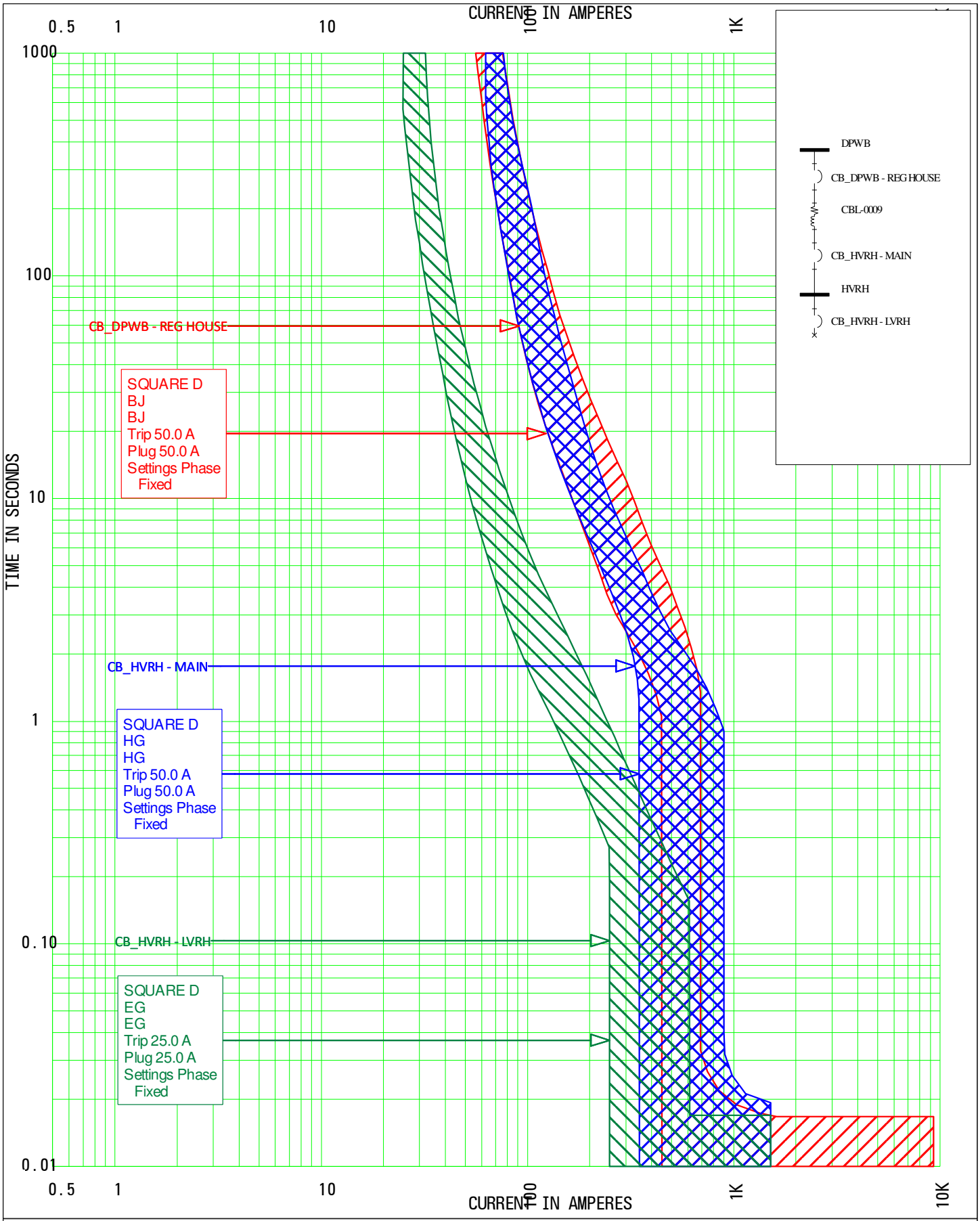

TCC Name: TCC_20

Current Scale x 1

Reference Voltage: 480V
Springfield Water & Sewer
1515 Granville Road

TCC_21 displays the coordination between the feeder breaker in HVRH, main breaker in LVRH and largest feeder breaker in LVRH. The existing settings provide the best protection with the existing equipment. The transformer feeding LVRH is properly protected.

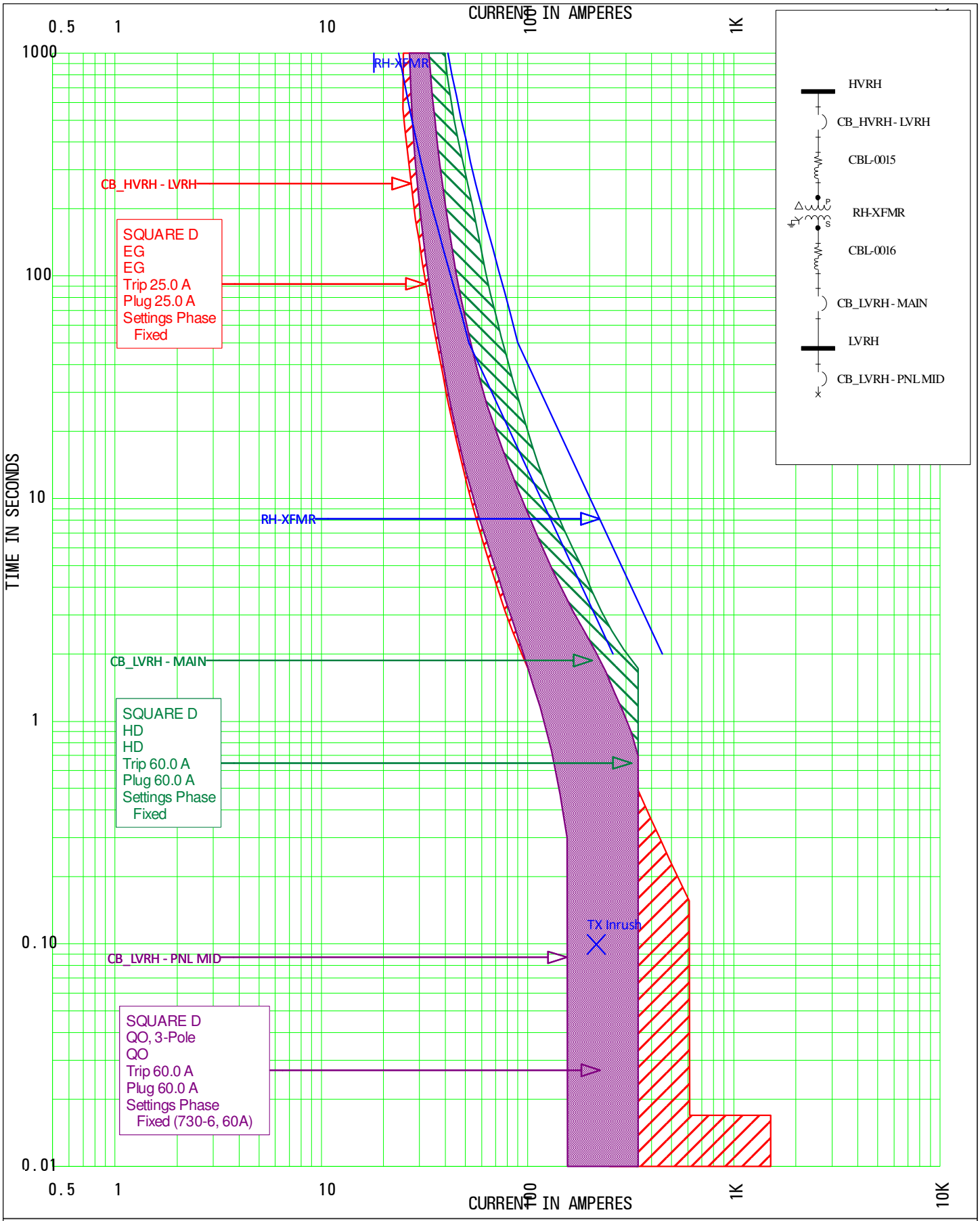

TCC Name: TCC_21

Current Scale x 1

Reference Voltage: 480V
Springfield Water & Sewer
1515 Granville Road

TCC_22 displays the mis-coordination between the feeder breaker in DPWB, the main breaker in HVCB and the feeder breakers in HVCB. In the event of a fault downstream of DPWB, the breakers feeding DPWB has the potential to trip prior to the breaker closest to the fault. The settings adjustments seen in TCC_22-NEW provide better protection and reduced chance of nuisance tripping. The following setting adjustments are used for the arc flash calculations and shall be adjusted prior to applying labels. The transformer feeding the Panel LVCB is properly protected however, the in-rush current has the potential to trip the feeder breaker in HVCB. If a nuisance operation occurs during energization, a new breaker with adjustable settings should replace the existing fixed breaker.

CB_HVCB – MAIN
LTPU(lr): 250 → 100
LTD(tr): 0.5 → 16
INST(li): 1.5 → 5.5

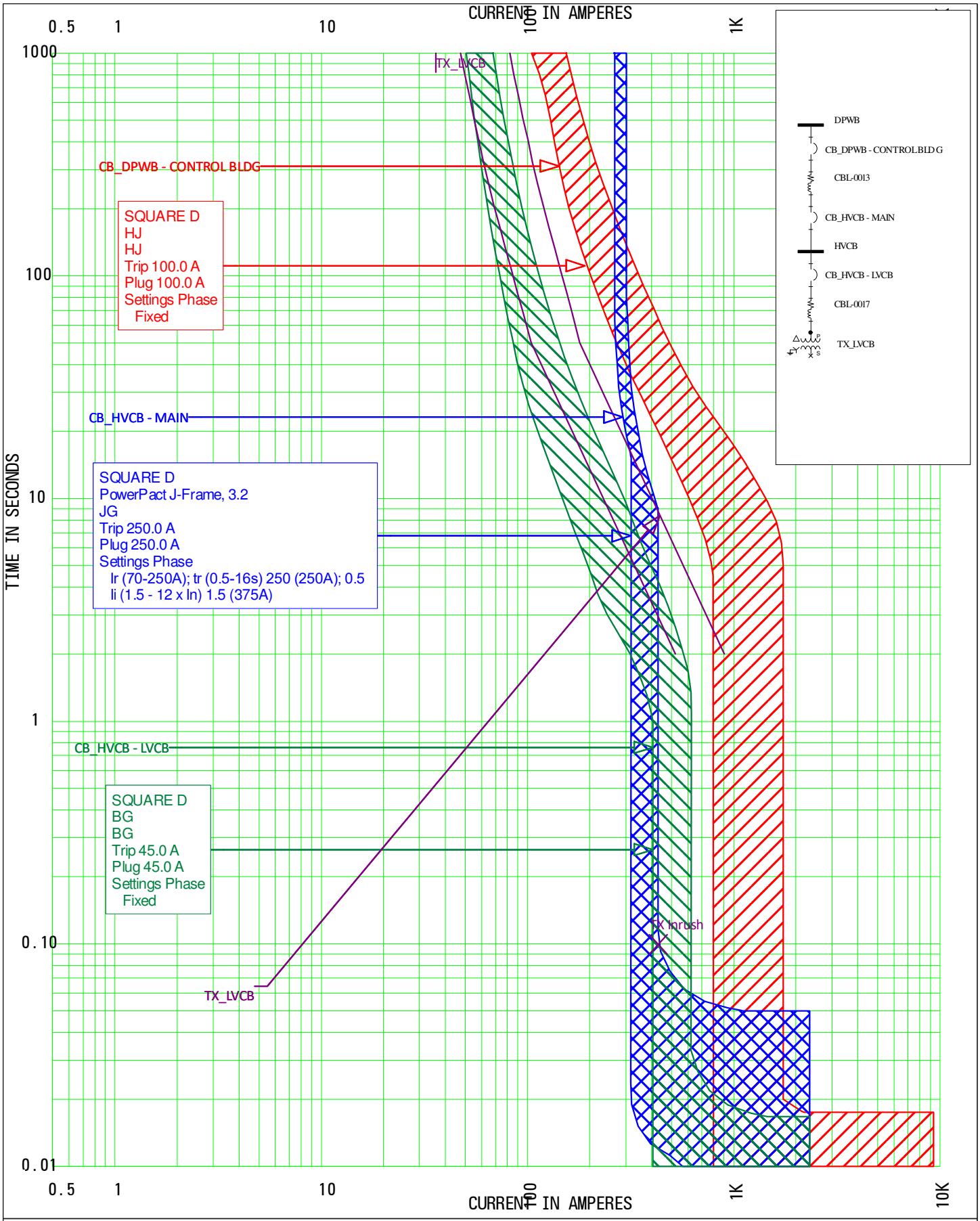

TCC Name: TCC_22

Current Scale x 1

Reference Voltage: 480V
Springfield Water & Sewer
1515 Granville Road

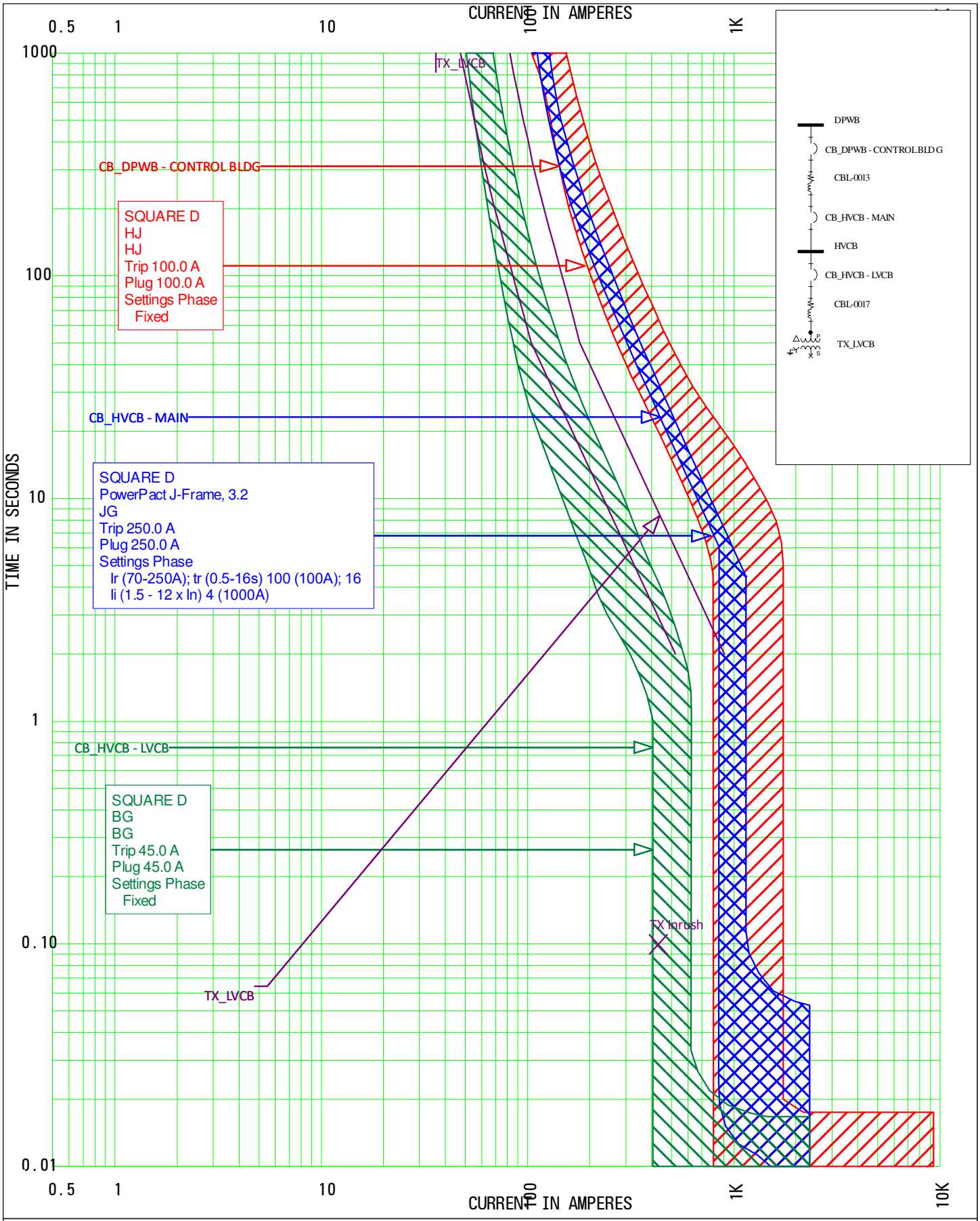

TCC Name: TCC_22_NEW

Current Scale x 1

Reference Voltage: 480V
Springfield Water & Sewer
1515 Granville Road

4.2.2 General Recommendations

System-wide: Perform periodic equipment testing and inspection. This should include testing of the breaker trip units as well as mechanical operation of the breakers themselves.

The calculated arc flash energy level is dependent on the proper operation of the upstream protective device. Any equipment malfunction or change in device characteristics can cause the actual incident energy to be higher than the calculated value.

Protective Devices: Implement the setting changes listed below as soon as is feasible; the setting changes must be made before the arc flash labels can be installed.

4.2.3 Protective devices with new recommended settings

Refer to Appendix C for the complete list of all breaker settings.

- Feeder Breaker for PP-5 in Main Switchgear
  - Short-Time Pickup (STPU) Setting:
    - Original Setting: 2
    - New Setting: 4
  - Short-Time Delay (STD) Setting:
    - Original Setting: 0.2
    - New Setting: 0.5
- Feeder Breaker for MCC-4 in Main Switchgear
  - Long-Time Delay (LTD) Setting:
    - Original Setting: 2
    - New Setting: 4
  - Short-Time Pickup (STPU) Setting:
    - Original Setting: 2
    - New Setting: 4
  - Instantaneous (INST) Setting:
    - Original Setting: 2
    - New Setting: 3
- Feeder Breaker for MCC-3 in Main Switchgear
  - Long-Time Delay (LTD) Setting:
    - Original Setting: 2
    - New Setting: 7
  - Short-Time Pickup (STPU) Setting:
    - Original Setting: 2.5
    - New Setting: 6
  - Instantaneous (INST) Setting:
    - Original Setting: 3
    - New Setting: 4
- Feeder Breaker for DPWB in Main Switchgear
  - Long-Time Delay (LTD) Setting:
    - Original Setting: 2
    - New Setting: 7
  - Short-Time Pickup (STPU) Setting:
    - Original Setting: 2
    - New Setting: 6
  - Instantaneous (INST) Setting:

        - Original Setting: 2
        - New Setting: 3
- Feeder Breaker for EMCC in Main Switchgear
    - Long-Time Delay (LTD) Setting:
        - Original Setting: 2
        - New Setting: 7
    - Short-Time Pickup (STPU) Setting:
        - Original Setting: 2
        - New Setting: 6
    - Instantaneous (INST) Setting:
        - Original Setting: 2
        - New Setting: 3
- Main Breaker for DPWB
    - Long-Time Delay (LTD,tr) Setting:
        - Original Setting: 0.5
        - New Setting: 8
    - Short-Time Pickup (STPU,lsd) Setting:
        - Original Setting: 1.5
        - New Setting: 6.5
    - Instantaneous (INST,li) Setting:
        - Original Setting: 1.5
        - New Setting: 5.5
    - Ground Fault Pickup(GFPU,lg) Setting:
        - Original Setting: 0.2
        - New Setting: 0.5
    - Ground Fault Delay (GFD,tg) Setting:
        - Original Setting: 0
        - New Setting: 0.3
- Feeder Breaker for Building 15-18 in DPWB
    - Long-Time Pickup (LTPU,lr) Setting:
        - Original Setting: 100
        - New Setting: 45
    - Long-Time Delay (LTD,tr) Setting:
        - Original Setting: 0.5
        - New Setting: 16
    - Short-Time Pickup (STPU,lsd) Setting:
        - Original Setting: 1.5
        - New Setting: 10
    - Short-Time Delay (STD,tsd) Setting:
        - Original Setting: 0
        - New Setting: 0.4
    - Instantaneous (INST,li) Setting:
        - Original Setting: 1.5
        - New Setting: 12
    - Ground Fault Pickup(GFPU,lg) Setting:
        - Original Setting: 0.2
        - New Setting: 1
    - Ground Fault Delay (GFD,tg) Setting:
        - Original Setting: 0
        - New Setting: 0.2
- Main Breaker for HVCB

- Long-Time Delay (LTPU,lr) Setting:
  - Original Setting: 250
  - New Setting: 100
- Long-Time Delay (LTD,tr) Setting:
  - Original Setting: 0.5
  - New Setting: 16
- Instantaneous (INST,li) Setting:
  - Original Setting: 1.5
  - New Setting: 5.5

4.2.4 Action List

- Develop a plan to implement the protective device setting changes recommended in this report as quickly as possible. This is necessary to provide the arc flash reductions noted in this report. The results presented in this report are not valid until these changes are made.
- Perform routine periodic testing of 480 V breaker trip units.
- Develop a training plan for all facility electricians, educating them on the arc flash hazards of adjusting or modifying protective device settings or fuse sizes without proper verification.

Section 5
Arc Flash Hazard Analysis

5.1 Introduction

An arc flash hazard analysis was performed to estimate (1) arc flash boundary distance and (2) arc flash incident energy at typical working distances at each piece of equipment in the distribution system down to the 480V and 208V panelboard level. This analysis was done in accordance with the requirements and recommendations of IEEE-1584, 2002, and protection requirements in NFPA 70E, 2018. As with any arc flash analysis, it is intended to be used in conjunction with a comprehensive electrical safety program.

An arc flash hazard is defined by 2018 NFPA 70E as "*a source of possible injury or damage to health associated with the release of energy caused by an electric arc"*. Arc flash is the explosive release of energy when electrical current jumps the distance from one conductor to another, or when it jumps from a conductor to ground. That jump is called an "arc". "Flash" refers to the release of light and heat energy. In the workplace, arc flash can be deadly. It can happen anywhere you find energized electrical equipment or conductors. The "flash" causes an explosive expansion of air and metal referred to as an Arc Blast. This release of energy can reach temperatures of up to 35,000°F. The intense heat from the arc causes the sudden expansion of air. The result is an explosive blast with very strong air pressure. Equipment and materials melt and are vaporized during an arc flash. When materials vaporize they expand in volume. For example, copper expands by a factor of 67,000 times when it turns from a solid to a vapor. The dangers associated Arc Flash and Arc Blast are burns, high pressures and sound waves, and shrapnel in the form of molten steel and fragments. Resulting in electric shock, severe burns, blindness, shrapnel wounds, lung blast injuries, ruptured eardrums and pressure wave injuries.

The intensity of an arc flash is measured by the *incident energy* (measured in calories per square centimeter – Cal/cm^2) at a certain distance away from the arc flash source. The distance used to calculate the incident energy of an arc flash is the typical *working distance* for the specific piece of equipment being worked on. Working distance is typically assumed to be 18 inches for low voltage panels and MCCs, 24 inches for low voltage switchgear, and 36 inches for medium voltage equipment.

The arc flash intensity, incident energy, and level of PPE required will vary for different electrical equipment throughout a facility. Arc flash intensity depends on various factors including contributions from the power source (utility, generator, etc.), settings of overcurrent protective devices (circuit breakers, fuses, etc.), system inductance, capacitance and impedance, circuit lengths, and motor contributions.

Detailed arc flash data is presented in spreadsheet format in Appendix B. This information was derived from the SKM model, with additional description added as needed.

5.2 Methodology

The calculations for arc flash energy are based on IEEE-1584 calculation methods and the requirements of NFPA 70E, 2018 regarding boundary distances and protective clothing requirements. Arc flash energy calculations are based on maximum 3-phase bolted faults levels calculated by SKM. Arc duration is based on the time current characteristics of the

upstream overcurrent device, based on the manufacturer's published time current curves. For equipment that has a long arcing current clearing time, a maximum arc flash duration of 2 seconds was used for those situations where the calculated duration is longer than 2 seconds. This is consistent with the recommendations in IEEE-1584. A worker exposed to an arc flash event will be rapidly moving away from the arc source if physically able. The only exception to this would be situations where the worker was prevented from moving away, such as being aloft in a bucket truck.

5.2.1 Arc Energy at Reduced Current

Arc energy depends primarily on the available fault current and the duration of the arc. The arcing time is based on the calculated current through the upstream device that will interrupt the fault and its response characteristics (time current curve). Because of the inverse characteristic of protective devices, IEEE-1584 also recommends that a second evaluation be done using 85% of the calculated arcing fault current for voltages at 1,000 V and below. This is done because, in some cases, the lower arcing current can result in a longer clearing time where higher arc energy may result.

Evaluations for arc energies at both 100% and 85% of the calculated arc current were made per the IEEE-1584 recommendations. The arc flash table shows only the higher of the 100% and 85% calculations. Where the 85% arcing value is the higher, an asterisk (*) is placed in front of the Arc Current value in the table. Per IEEE-1584 guidelines, systems above 1000 V are evaluated at 100% arcing fault current.

5.2.2 Protective Device Settings

The recommended protective device settings were used to perform the arc flash energy calculations. The calculated arc flash energies were determined by the three-phase fault arcing currents and the arcing time, which was derived from the tripping characteristics of the protective devices used in the system. These results of this report are dependent on the implementation of the recommended protective device setting changes listed in Section 4. For results in this report to be valid, all protective device settings shall be changed to those shown in Appendix C. It is strongly recommended that all protective equipment be maintained and tested per manufacturer's recommendations. Failure to implement these setting changes in Section 4 and to properly maintain protective equipment will invalidate the Arc Flash Hazard Study and a worker may not have the proper PPE.

It is imperative that management stress to all employees and contractors working on electrical equipment that any increase in fuse size or breaker trip settings may increase the arc flash potential and invalidate this study. Therefore, arbitrary increases in protective device sizes or trip settings should not be permitted.

5.2.3 Consideration of System Modes of Operation

Since variations in arcing current can have a large impact on the arc time, IEEE-1584 recommends that the system be evaluated for both normal and likely non-standard operating modes in order to determine the worst case arc energies. In some cases, as noted above, lower arcing current can result in higher arc flash incident energy because of the slower response of the inverse time element overcurrent devices. This study reports the worst case results based on system normal and non-standard operating conditions.

The following scenarios were used to determine the worst-case incident energy:

- Infinite Available Fault Current at the primary of the 1000kVA transformer. This allows the 1000kVA transformer to supply the maximum amount of fault current based on the transformer size, voltage and impedance.
- Generator Power.
- 10kA Fault Current at the primary of the 1000kVA transformer.
- 5kA Fault Current at the primary of the 1000kVA transformer.
- 2kA Fault Current at the primary of the 1000kVA transformer.
- 1kA Fault Current at the primary of the 1000kVA transformer.
- 500A Fault Current at the primary of the 1000kVA transformer.

5.2.4 IEEE-1584, 2002 and NFPA 70E, 2018 Comparison

The IEEE-1584 standard is in no way a replacement for NFPA 70E. Both should be used. IEEE-1584 describes one method for calculation of the expected arc energy. It does not provide guidance on how this data should be used, or on acceptable safety procedures or protection requirements. NFPA 70E provides detailed safety procedures for all electrical maintenance activities. It recognizes IEEE-1584 as one acceptable method of calculating the expected arc flash energy for work or exposure to energized conductors. The IEEE-1584 equations for computing arcing currents and arc flash boundaries are empirical based on analysis of a large body of test data (up to 15 kV). Because of the extensive test data used in developing the IEEE-1584 equations, it is generally believed to be the most accurate estimating tool available at this time. It is estimated that the selected PPE based on the IEEE-1584 equations is adequate to protect employees from second-degree burns on the head and chest in 95% of cases.

5.3 Warning and Disclaimer

While Tighe & Bond believes the methods and techniques used for determination of the arc flash energy levels are reasonable, Tighe & Bond can assume no responsibility for any injury or death that may occur as a result of the application of these calculations. The intent is to provide a reasonable engineering estimate that may be helpful in determining appropriate safety procedures and methods to be used, based on the best available information. In all cases, it is preferable to never work on energized equipment.

As noted above, the arc flash energy values provided herein are based on the overcurrent protective device settings shown in Appendix C (which include the recommended setting changes listed in Section 4). Any additional changes in protective device settings or failure to implement the setting changes listed in Section 4 may result in significant changes to the available arc flash energy and render this report invalid. Circuit breaker operation and trip times are based on the assumption that all equipment has been properly maintained. Maintenance labels were not noted at the time of data collection. If the equipment has not been properly maintained, this report is not valid until all equipment has been tested and found to be operating in compliance with the manufacturers published standards.

There are several common misconceptions in the industry regarding arc flash analyses.

The first misconception is that arc flash hazard labeling is sufficient to comply with OSHA safety mandates and NFPA 70E standards. Labeling is just one small part of an arc flash

hazard program. Other requirements include written work practices, work permits and electrical safety training.

The second misconception is that wearing the appropriate PPE will prevent injury. The purpose of wearing the appropriate PPE is to reduce the risk of life-threatening burns to the head and chest areas. This does not mean severe burns will not occur to the hands and arms during an arc event. In addition, the blast pressure from an arc may blow the worker down or against equipment resulting in an impact-type injury.

5.4 Key Assumptions

Tighe & Bond has attempted to minimize assumptions and provide the most accurate data available in this study. Some necessary assumptions are noted in this section. Any change in conditions or equipment from those assumed in this study may require a change in protective device settings or components to maintain proper coordination and protection.

- All equipment has been properly maintained. If the equipment has not been properly maintained, this report is not valid until all equipment has been tested and found to be operating in compliance with the manufacturers published standards.
- Bolted fault current calculations based on momentary (1/2 cycle) impedance network.
- Only three-phase faults considered (per IEEE-1584).
- Only phase overcurrent or phase differential protection evaluated.
- Pre-fault voltage on any bus in the facility assumed to be 1.0 pu.
- Device names and distribution system configuration presented in this study is based on data collection and as-built drawings.
- Seven operational scenarios were used to calculate worst case incident energy:
    - Scenario 1: Infinite Available Fault Current at the primary of the 1000kVA transformer. This allows the 1000kVA transformer to supply the maximum amount of fault current based on the transformer size, voltage and impedance.
    - Scenario 2: Generator Power.
    - Scenario 3: 10kA Fault Current at the primary of the 1000kVA transformer.
    - Scenario 4: 5kA Fault Current at the primary of the 1000kVA transformer.
    - Scenario 5: 2kA Fault Current at the primary of the 1000kVA transformer.
    - Scenario 6: 1kA Fault Current at the primary of the 1000kVA transformer.
    - Scenario 7: 500A Fault Current at the primary of the 1000kVA transformer.

5.5 Explanation of Data in Arc Flash Hazard Report Tables

The following paragraphs provide a detailed explanation of each column in the spreadsheet report included in Appendix B.

5.5.1 Bus Name

This name corresponds to the SKM bus name of the faulted bus under consideration. Attached to the bus name an added description is added since the equipment attached to the bus can have different arc clearing times.

5.5.2 Protective Device Name

This column lists the protective device (circuit breaker, relay or fuse) that is used to determine the duration of the arc hazard. In most cases, SKM automatically locates the nearest upstream device and uses the current through this device to determine the arc time. The name listed in this case is the SKM device name in the database.

In order to determine the appropriate arc flash hazard level, it is necessary to determine what device must operate to interrupt a fault in the area being evaluated. This is not necessarily the nearest device, since the closer device may be downstream of certain fault conditions. As an example, consider a 480 V panelboard with a main breaker. Removing the panelboard cover exposes not only the panelboard bus connections, but also the main breaker line side terminals. If the line side terminals are accidentally shorted during maintenance or inspection, the resulting fault must be cleared by the closest upstream circuit breaker, not the panelboard main breaker. For a 480 V panelboard, this will often be a 480 V breaker in an upstream switchboard or motor control center. For this reason, the arc hazard for any work anywhere within this panelboard must be based on the worst case situation where the fault must be cleared by the upstream 480 V breaker. This can result in unexpectedly high energy arc. This problem is illustrated in the following sketch.

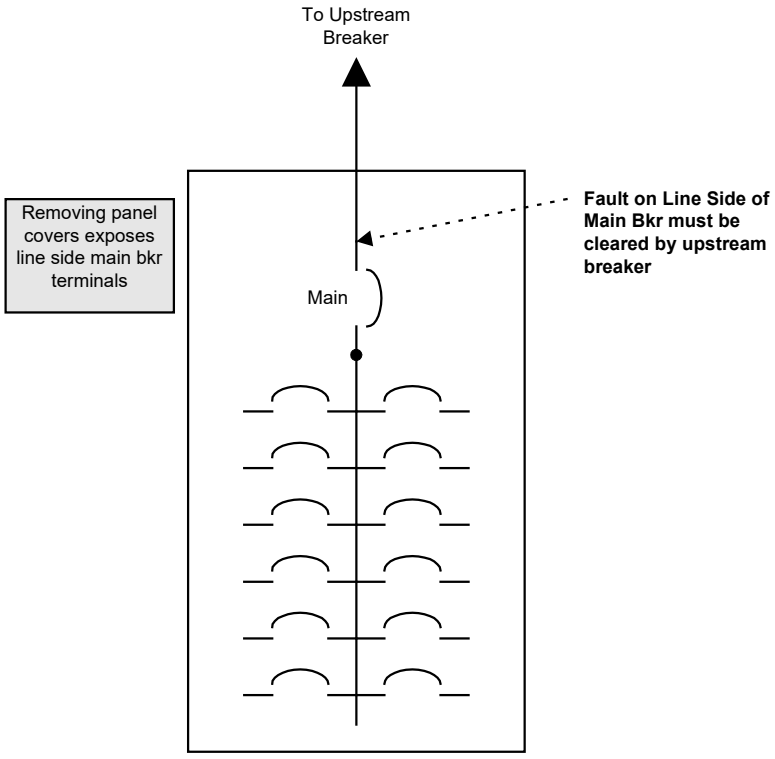

Typical Panelboard with Main Breaker

5.5.3 Bus kV

Nominal bus voltage in kV.

5.5.4 Bus Bolted Fault (kA)

The bolted fault current listed in this report is based on the maximum branch 3-phase momentary fault current, in kilo amperes, that would flow through the listed upstream protective device for a fault. This value is used to determine the estimated arc fault current. Note that this value will not necessarily be equal to the actual fault current at the fault point, since other sources of fault current may be contributing. However, SKM always uses the total fault current at the faulted bus to determine the resulting arc flash energy. This fault current can be greater than the current shown in this column. Also, it should be noted that this current is shown in terms of the voltage level of the upstream device. In some cases, this may be a 25 kV fuse protecting a 480 V bus, so the fault current in the spreadsheet would be at 25 kV even though the bus under evaluation was a 480 V bus.

It should be emphasized that SKM allows users to list Bus Current, the actual fault current at the fault point, instead of Branch Current, as used in this report. It should also be pointed out that the maximum 3-phase ½ cycle momentary fault current was used to perform arc flash calculations in this study. This is based on the assumption that the arc flash is initiated by user actions (screwdriver, dropping tools, etc.) and not random insulation breakdown leading to a longer term arcing fault. This provides the most reasonable and conservative results for the initial arc blast, and is consistent with the recommendations in IEEE-1584. However, the results from this current may be too conservative for a longer term arcing fault, especially the bolted fault currents which include significant fast-decaying motor short circuit current contributions. To account for this condition, SKM also allows users to use Interrupting or 30-cycle currents, or integral method to perform arc flash calculation.

5.5.5 Bus Arcing Fault (kA)

Based on IEEE-1584, 2002 guidelines, the estimated arc fault current in kilo amperes is determined by applying the appropriate empirical equations to the bolted fault current listed to the left. Again, this arc fault current is the current flowing through the upstream device and is used to determine the clearing time of the upstream protective device.

SKM users can choose to list the total bus bolted fault current at the fault point instead of branch fault current. This arcing fault current is the total bus arc fault current instead of branch arc fault current, as used in this report.

5.5.6 Protective Device Bolted Fault (kA)

This is the portion of the total bolted fault current that flows through a given protective device. Note that some of the total bolted fault current flowing into a bus often runs through at least one other parallel source.

5.5.7 Protective Device Arcing Fault (kA)

This is the arc current flowing through the given protective device feeding the electric arc fault. Note that some of the total arcing fault current flowing into a bus often runs through at least one other parallel source.

5.5.8 Trip/Delay (sec.)

This is the time required for a protective device to operate and send a trip signal to the circuit breaker. For low voltage circuit breakers, this trip time also includes the breaker opening and fault clearing time. SKM automatically determines the trip time based on the calculated arcing current (through the device) and the time current characteristics defined in the SKM library. This trip time can be manually verified by referring to the time current curve for the protective device and checking the operating time at the appropriate setting using the arcing fault current listed in the table.

5.5.9 Ground

Arc flash incident energies are statistically increased slightly when a fault occurs on an ungrounded system per IEEE-1584, 2002. Two grounding classes are modeled in the IEEE-1584 equations: 1) ungrounded, which includes ungrounded, high-resistance grounding, and low-resistance grounding, and 2) solidly grounded. Most electrical systems are solidly grounded. SKM classifies the bus grounding with a "no" in the Ground column if the bus is not solidly grounded. To keep the table size to a minimum, this column is not included in the table since the entire system is solidly grounded.

In reality, the language of ungrounded and solidly grounded is a misnomer. All systems are grounded in some manner, but none are truly solidly grounded. Ungrounded systems are grounded via capacitive coupling in the conductor, bus, transformer, and motor circuits. Solidly grounded systems have resistance in the ground circuits so that the further you are from the transformer source, the higher the ground return impedance, effectively ungrounding or resistance grounding the system. The proper term for system grounding is found in the Westinghouse T&D book, and is referred to as "effectively grounded". SKM uses a detailed symmetrical component model to determine if the system is effectively grounded. It then applies this model to the IEEE-1584 equations for the most accurate answers available.

5.5.10 Equipment Type

Arc flash hazards are increased significantly when the fault occurs within a confined space such as an equipment enclosure because the radiant energy from the arc is reflected from the enclosure walls. To account for this fact, each bus in the SKM model carries a definition of the type of equipment or bus to be used for arc flash calculations. SKM uses this designation to apply appropriate adjustment factors to the calculated open air arc energy per IEEE-1584. The exact designation (switchgear versus MCC) has an effect on the arc gap used in the calculations, but this variation is not a major factor in the calculation. The key data is determining if the bus is considered in an enclosed space, or in open air.

5.5.11 Gap (mm)

The arc air gap listed is based on recommendations in IEEE-1584 and is used to determine maximum energy released by an arcing fault. The arc gap is a function of the voltage as well as the type of equipment and is based on actual equipment data compiled by the IEEE-1584 committee. Slightly different arc gaps are used for switchgear and MCC/Panel classifications as recommended in IEEE-1584.

5.5.12 Flash Hazard Boundary (in.)

The distance, in inches, from the arc to a point where the arc energy is down to a level that is just below the level required to cause second degree burns. Within this area, special protective clothing (PPE) and equipment must be used while arc hazard exists. The

boundary is based on an energy level of 1.2 cal/cm^2. This is based on research and testing done on the radiant energy released during faults and the impact of this heat on skin tissue. NFPA 70E, 2018 refers to this distance as the Arc Flash Boundary.

5.5.13 Working Distance (in.)

The working distance is defined as the expected distance in inches from any potential arc source to worker's chest/torso during the planned work activity. This distance is used to calculate the Incident Energy that determines the required PPE level. 18 inches is typically used for most routine maintenance work. If larger distances can be maintained, the Incident Energy would be reduced.

5.5.14 Incident Energy (cal/cm^2)

This is the radiant heat energy density in calories per square centimeter at the Working Distance produced by the worst case arcing fault. This value is used to determine the minimum PPE rating for a particular location. Incident energies are calculated using the IEEE-1584 algorithm.

From a practical viewpoint, incident energies exceeding 40 cal/cm^2 are of particular concern because the risk for injury due to blast pressure, sound levels, shrapnel, etc. is significantly higher at these energies. Arc flash rated PPE may not protect against all of these hazards. At the other end of the energy spectrum, incident energies below 8 cal/cm^2 are desirable because this reduces the potential for 3rd degree burns and greatly reduces the level of PPE (bulk and heating) required for working around live parts.

5.5.15 Protective Clothing Guidelines Based on NFPA 70E Table 130.5(G)

TABLE 130.5(G) Guidance on Selection of Arc-Rated Clothing and Other PPE for Use When Incident Energy Exposure Is Determined

Incident Energy Exposure	Protective Clothing and PPE
1.2 cal/cm^2 to 12 cal/cm^2	Arc-rated clothing with an arc rating equal to or greater than the estimated incident energy[a]. Long-sleeve shirt and pants or coverall or arc flash suit (SR) Arc-rated face shield and arc-rated balaclava or arc flash suit hood (SR)[b] Arc-rated outerwear (e.g., jacket, parka, rainwear, hard hat liner) (AN) Heavy-duty leather gloves, arc-rated gloves, or rubber insulating gloves with leather protectors (SR)[c] Hard hat Safety glasses or safety goggles (SR) Hearing protection Leather footwear

Greater than 12 cal/cm^2	Arc-rated clothing with an arc rating equal to or greater than the estimated incident energy[a]. Long-sleeve shirt and pants or coverall or arc flash suit (SR) Arc-rated arc flash suit hood Arc-rated outerwear (e.g., jacket, parka, rainwear, hard hat liner) (AN) Arc-rated gloves or rubber insulating gloves with leather protectors (SR)[c] Hard hat Safety glasses or safety goggles (SR) Hearing protection Leather footwear

Notes:

1. SR: Selection of one in group is required
2. AN: As needed
3. [a]Arc ratings can be for a single layer, such as an arc-rated shirt and pants or a coverall, or for an arc flash suit or a multi-layer system if tested as a combination consisting of an arc-rated shirt and pants, coverall, and arc flash suit.
4. [b]Face shields with a wrap-around guarding to protect the face, chin, forehead, ears, and neck area are required for NFPA 70E 2018 130.7(C)(10)(c). Where the back of the head is inside the arc flash boundary, a balaclava or an arc flash hood shall be required for full head and neck protection.
5. [c]Rubber insulating gloves with leather protectors provide arc flash protection in addition to shock protection. Higher class rubber insulating gloves with leather protectors, due to their increased material thickness, provide increased arc flash protection.

Hand Protection: Refer to your facility PPE standards and NFPA 70E, 2018, for specific recommendations on hand protection. Recommendation depends on specific activity to be performed. In general, voltage-rated gloves are recommended for any activity involving work on live parts, including voltage measurements and testing. Leather gloves are recommended for most other maintenance activities. Leather covers for voltage-rated gloves meet requirement for leather gloves

5.6 Additional NFPA 70E Data

The following distances are stipulated in NFPA 70E based on the system voltage. Although not strictly related to arc flash hazards, this data is often printed on equipment warning labels.

5.6.1 Shock Hazard

This is based simply on the normal phase-to-phase operating voltage.

5.6.2 Approach Boundaries

The Limited Approach and Restricted Approach Boundaries given are based strictly on Table 130.4(D) in NFPA 70E and are a function of the operating voltage. This information is provided to assist in preparation of the arc flash hazard warning labels.

5.6.3 Limited Approach Boundary

Used to limit approach by unqualified personnel. Where the Flash Hazard Boundary is greater than the Limited Approach Boundary, the Flash Hazard Boundary takes precedence.

5.6.4 Restricted Approach Boundary

Qualified personnel are not to come within this boundary or bring conductive material inside this boundary unless a written, approved plan from the employer exists for the work contemplated, and they are wearing appropriate PPE. In addition, they are to move inside the Restricted Approach Boundary only to the extent that is absolutely necessary to accomplish the planned work.

5.7 Results of Arc Flash Hazard Analysis

5.7.1 General

Detailed arc flash results are presented in spreadsheet format in the Appendix B. This information was derived from the SKM model, with additional descriptions added as needed.

Based on IEEE-1584 recommendations, the arc energy at each equipment/bus below 1000 V has been calculated at both the 100% and 85% values of the calculated arcing current. Arc initiation and arc impedance is random and can vary significantly. The 85% arcing current model effectively brackets the lower range of arcing current allowing the worst case arc energy to be determined.

The following sections provide a brief summary of the arc flash calculation results based on the recommended protective device settings. The detailed arc flash results are presented in the tables in the Appendix B.

5.7.2 Arc Flash Results for the Electrical System

The results of the arc flash hazard analysis using the recommended protective device settings from the Protective Device Coordination Study indicate that most of the points (buses/equipment) in the electrical system have manageable levels of incident energy, while there is a high energy level (74.5 cal/cm^2) at the Main Switchgear. Energized work should be prohibited in this area with the protective device settings presented in this report.

5.7.3 Action List

- Prohibit energized work from areas indicated above.
- Install Arc Flash Hazard labels after protective device settings are implemented.
- Implement a work permit process and job briefing/planning process for all electrical work tasks in compliance with requirements of NFPA 70E

Appendix A

One-Line Diagram

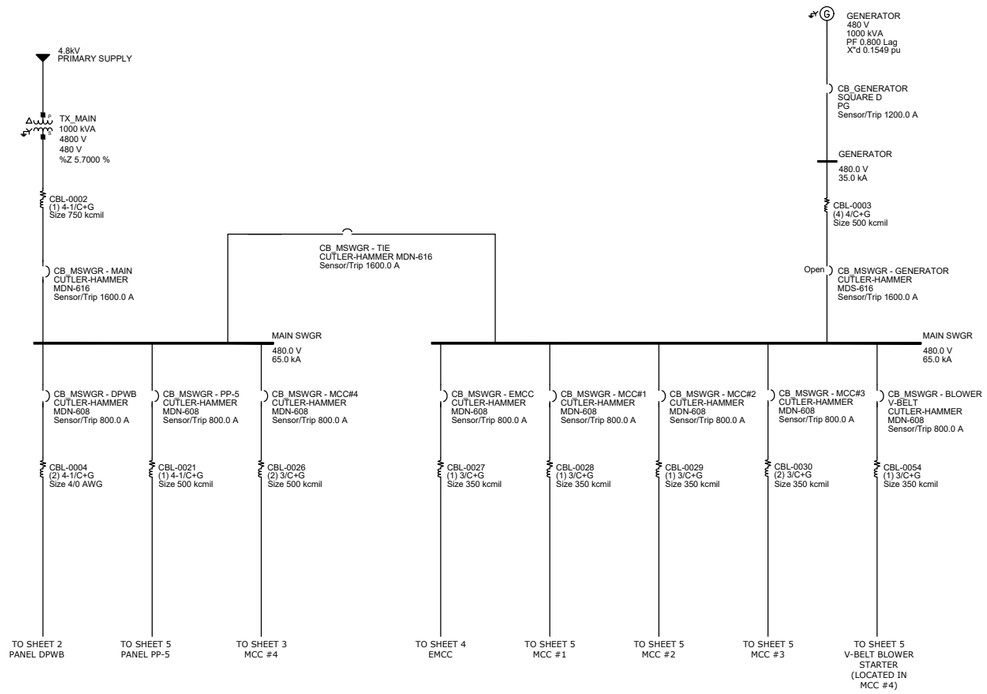

MAIN SWITCHGEAR IMPEDENCE DIAGRAM

NO SCALE

ABBREVIATIONS:

CB	CIRCUIT BREAKER
CBL	CABLE (INCLUDING WIRING & CONDUIT)
DS	DISCONNECT SWITCH
MTR	MOTOR
PD	PROTECTIVE DEVICE
PNL	PANEL
ST	STARTER
TX	TRANSFORMER

LEGEND:

TRANSFORMER

CABLE

FUSE

CIRCUIT BREAKER

MOTOR

UNINTERRUPTIBLE POWER SUPPLY

GENERATOR

Tighe&Bond
Engineers | Environmental Specialists

Springfield Water & Sewer Commission West Parish Filters

Arch Flash Study

Westfield, MA

MARK	DATE	DESCRIPTION

PROJECT NO:	S2057-008
DATE:	05/29/2019
FILE:	Sheet 1-Sheet 6.dwg
DRAWN BY:	LAK
CHECKED:	MJB
APPROVED:	MJR, PBG

FIGURE 1: MAIN SWITCHGEAR IMPEDENCE DIAGRAM

SCALE: NO SCALE

SHEET 1

Last Saved: 6/26/2019
Plotted: Jun 26, 2019 - 7:57pm By: LKrill
Tighe & Bond: J:\S\S2057 SWSC\008 - W Parish Electrical Backup Power Evaluation\Arc Flash\Report\Draft\Appendices\Drawings\AutoCAD\Sheet\Sheet 1-Sheet 6.dwg

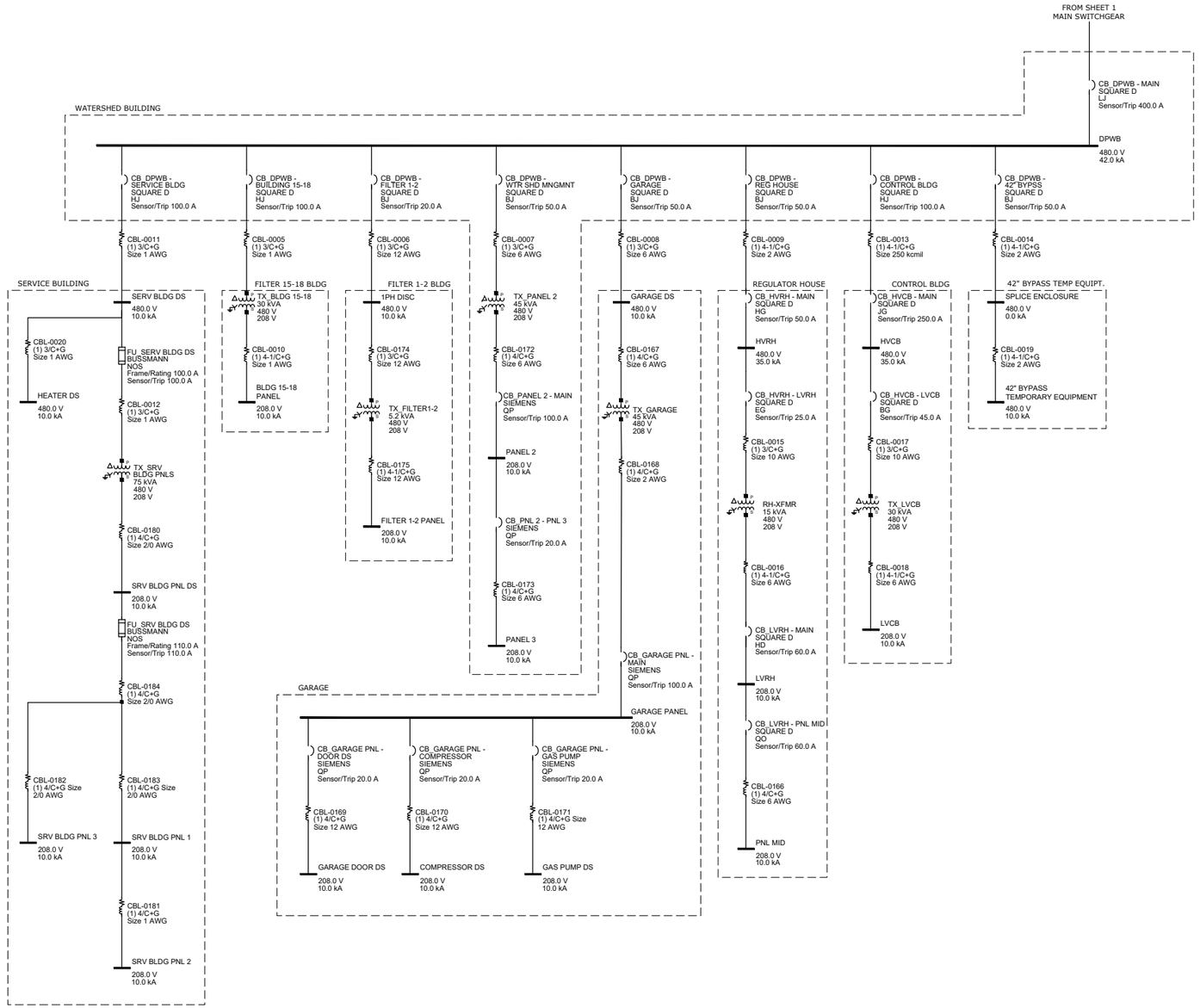

PANEL DPWB AND PLANT OUTBUILDINGS IMPEDENCE DIAGRAM

NO SCALE

ABBREVIATIONS:

CB	CIRCUIT BREAKER
CBL	CABLE (INCLUDING WIRING & CONDUIT)
DS	DISCONNECT SWITCH
MTR	MOTOR
PD	PROTECTIVE DEVICE
PNL	PANEL
ST	STARTER
TX	TRANSFORMER

LEGEND:

- TRANSFORMER
- CABLE
- FUSE
- CIRCUIT BREAKER
- MOTOR
- UNINTERRUPTIBLE POWER SUPPLY

Tighe&Bond
Engineers | Environmental Specialists

Springfield Water & Sewer Commission West Parish Filters

Arch Flash Study

Westfield, MA

MARK	DATE	DESCRIPTION

PROJECT NO:	S2057-008
DATE:	05/29/2019
FILE:	Sheet 1-Sheet 6.dwg
DRAWN BY:	LAK
CHECKED:	MJB
APPROVED:	MJR, PBG

FIGURE 2: PANEL DPWB AND PLANT OUTBUILDINGS IMPEDENCE DIAGRAM

SCALE: NO SCALE

SHEET 2

Last Saved: 6/26/2019
Last Saved by: LKrill
Tighe & Bond: J:\S\S2057 SWSC\0018 - W Parish Electrical Backup Power Evaluation\Arc Flash\Report\Draft\Appendices\Drawings\AutoCAD\Sheets\Sheet 1-Sheet 6.dwg

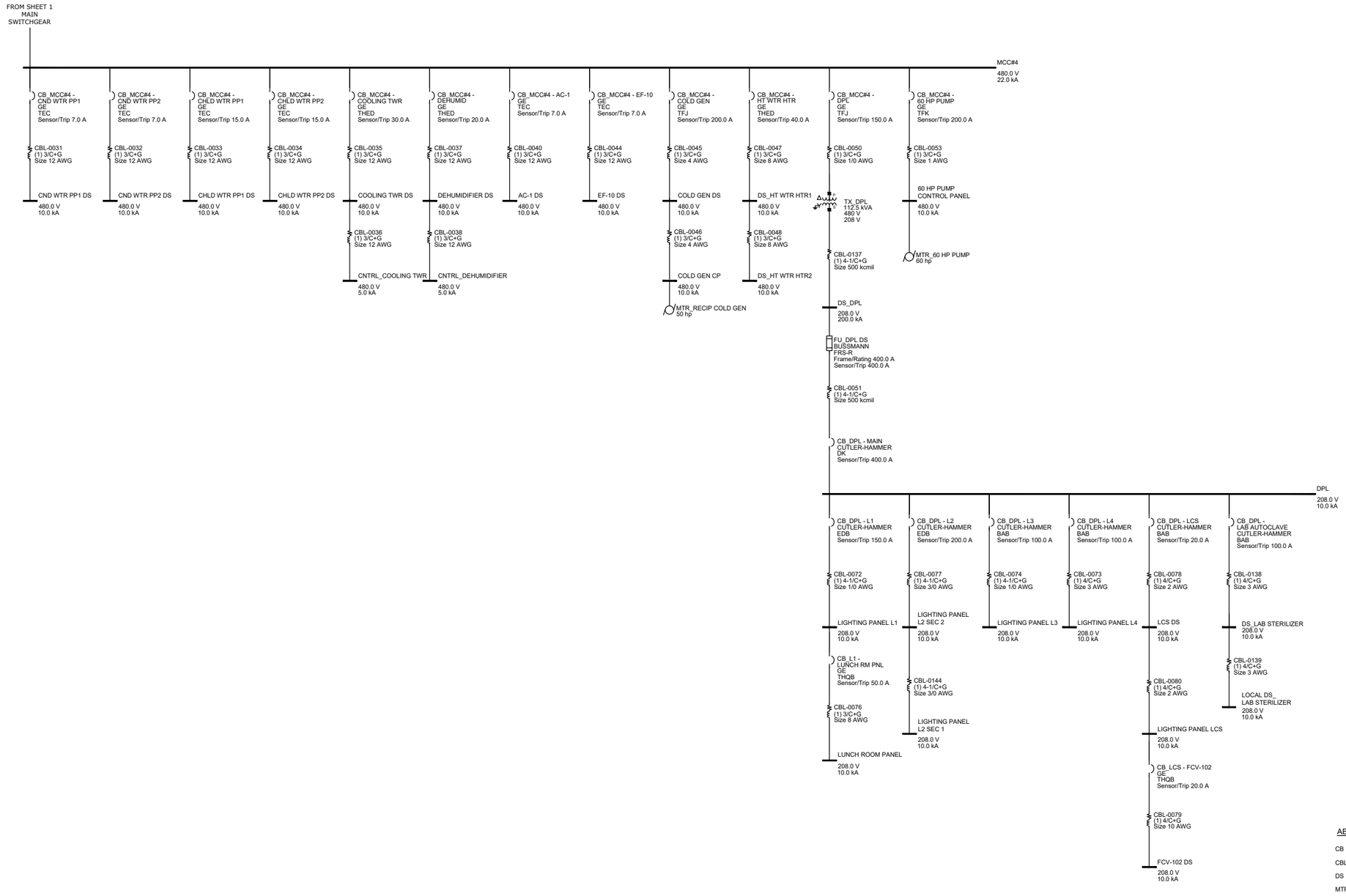

MOTOR CONTROL CENTER #4 IMPEDENCE DIAGRAM

NO SCALE

ABBREVIATIONS:

CB	CIRCUIT BREAKER
CBL	CABLE (INCLUDING WIRING & CONDUIT)
DS	DISCONNECT SWITCH
MTR	MOTOR
PD	PROTECTIVE DEVICE
PNL	PANEL
ST	STARTER
TX	TRANSFORMER

LEGEND:

TRANSFORMER

CABLE

FUSE

CIRCUIT BREAKER

MOTOR

UNINTERRUPTIBLE POWER SUPPLY

Tighe&Bond
Engineers | Environmental Specialists

Springfield Water & Sewer Commission West Parish Filters

Arch Flash Study

Westfield, MA

MARK	DATE	DESCRIPTION

PROJECT NO:	S2057-008
DATE:	05/29/2019
FILE:	Sheet 1-Sheet 6.dwg
DRAWN BY:	LAK
CHECKED:	MJB
APPROVED:	MJR, PBG

FIGURE 3: MOTOR CONTROL CENTER #4 IMPEDENCE DIAGRAM

SCALE: NO SCALE

SHEET 3

Last Saved: 6/26/2019
Last Saved By: LKill
Plotted: Thursday, June 27, 2019 7:57pm By: LKill
Tighe & Bond: J:\S\S2057 SWSC\008 - W Parish Electrical Backup Power Evaluation\Arc Flash\Report\Draft\Appendices\Drawings\AutoCAD\Sheet\Sheet 1-Sheet 6.dwg

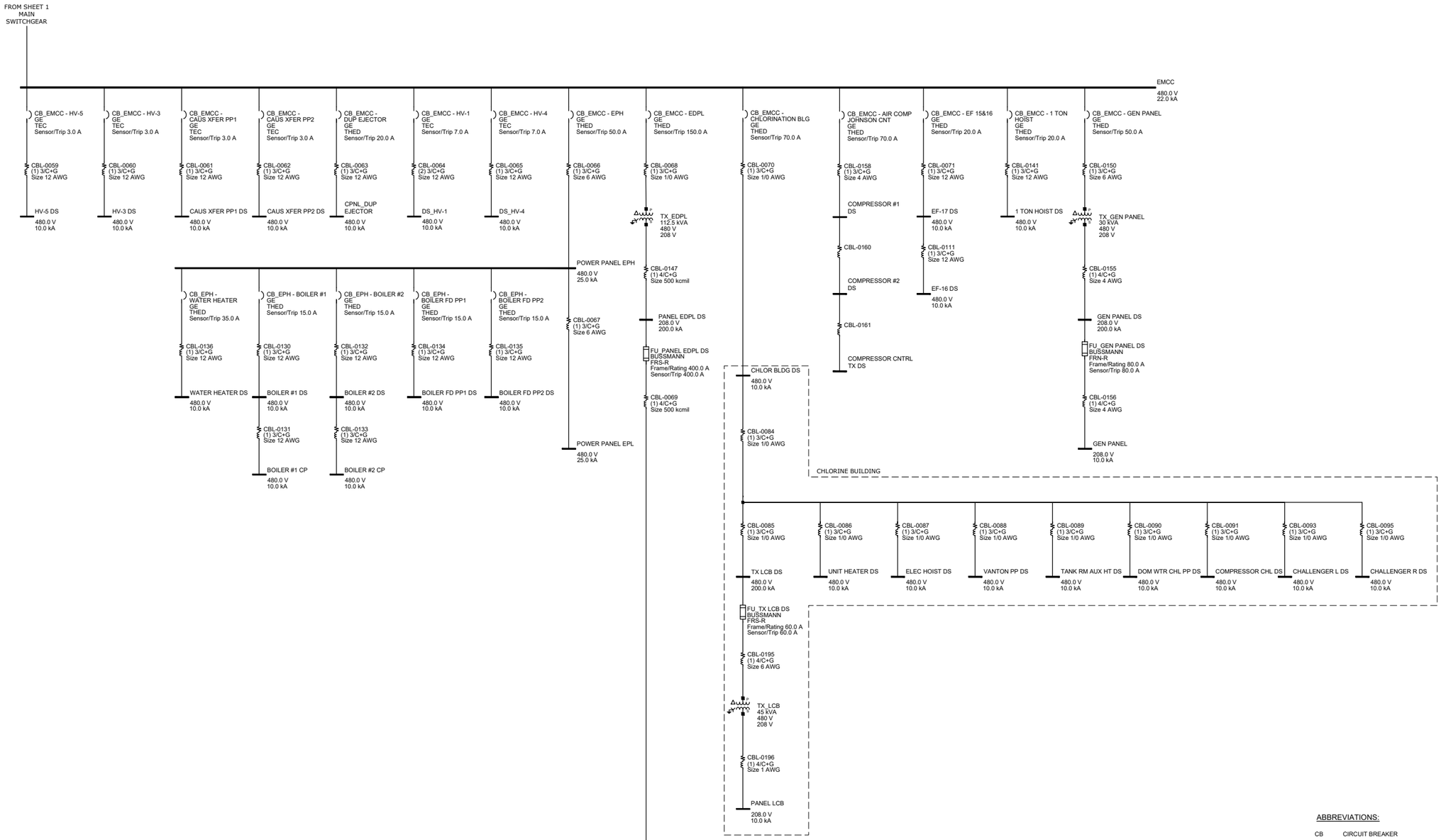

EMERGENCY MOTOR CONTROL CENTER & CHLORINE BUILDING IMPEDENCE DIAGRAM

NO SCALE

ABBREVIATIONS:

CB	CIRCUIT BREAKER
CBL	CABLE (INCLUDING WIRING & CONDUIT)
DS	DISCONNECT SWITCH
MTR	MOTOR
PD	PROTECTIVE DEVICE
PNL	PANEL
ST	STARTER
TX	TRANSFORMER

LEGEND:

- TRANSFORMER
- CABLE
- FUSE
- CIRCUIT BREAKER
- MOTOR
- UNINTERRUPTIBLE POWER SUPPLY

Tighe&Bond
Engineers | Environmental Specialists

Springfield Water & Sewer Commission West Parish Filters

Arch Flash Study

Westfield, MA

MARK	DATE	DESCRIPTION

PROJECT NO:	S2057-008
DATE:	05/29/2019
FILE:	Sheet 1-Sheet 6.dwg
DRAWN BY:	LAK
CHECKED:	MJB
APPROVED:	MJR, PBG

FIGURE 4: EMERGENCY MOTOR CONTROL CENTER IMPEDENCE DIAGRAM

SCALE: NO SCALE

SHEET 4

Last Saved: 6/26/2019
Plotted: 05/29/2019 - 7:57am By: LKrill
Tighe & Bond: J:\S\S2057 SWSC\0018 - W Parish Electrical Backup Power Evaluation\Arc Flash\Report\Draft\Appendices\Drawings\AutoCAD\Sheet\Sheet 1 -Sheet 6.dwg

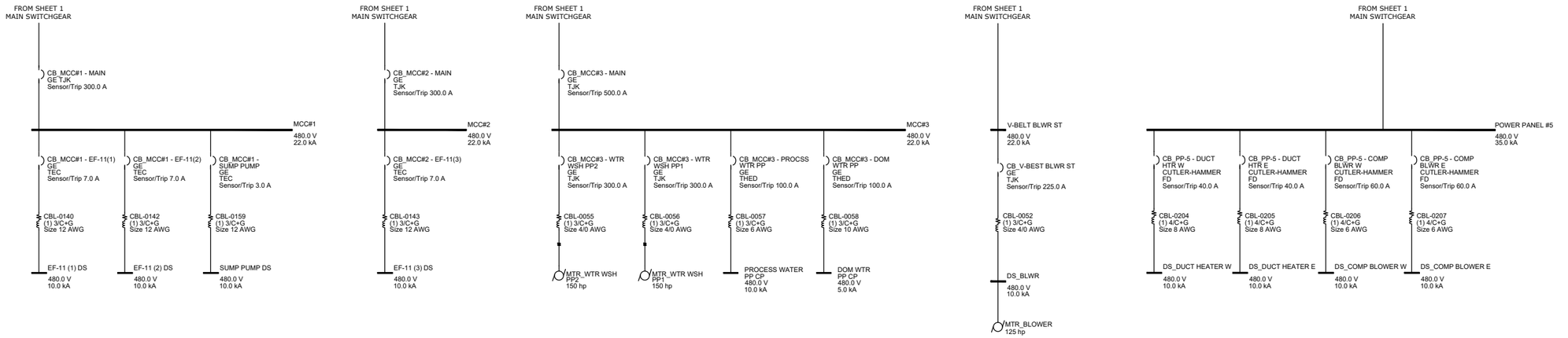

MOTOR CONTROL CENTERS #1, 2, 3 AND V-BELT BLOWER IMPEDENCE DIAGRAM

NO SCALE

ABBREVIATIONS:

CB	CIRCUIT BREAKER
CBL	CABLE (INCLUDING WIRING & CONDUIT)
DS	DISCONNECT SWITCH
MTR	MOTOR
PD	PROTECTIVE DEVICE
PNL	PANEL
ST	STARTER
TX	TRANSFORMER

LEGEND:

- TRANSFORMER
- CABLE
- FUSE
- CIRCUIT BREAKER
- MOTOR
- UNINTERRUPTIBLE POWER SUPPLY

Tighe&Bond
Engineers | Environmental Specialists

Springfield Water & Sewer Commission West Parish Filters

Arch Flash Study

Westfield, MA

MARK	DATE	DESCRIPTION

PROJECT NO:	S2057-008
DATE:	05/29/2019
FILE:	Sheet 1-Sheet 6.dwg
DRAWN BY:	LAK
CHECKED:	MJB
APPROVED:	MJR, PBG

FIGURE 5: MOTOR CONTROL CENTERS #1, 2 AND 3 IMPEDENCE DIAGRAM

SCALE: NO SCALE

SHEET 5

Last Saved: 6/26/2019
Plotted On:Jun 26, 2019-7:57am By: LKrill
Tighe & Bond: J:\S\S2057 SWSC\008 - W Parish Electrical Backup Power Evaluation\Arc Flash\Report\Draft\Appendices\Drawings\AutoCAD\Sheet\Sheet 1-Sheet 6.dwg

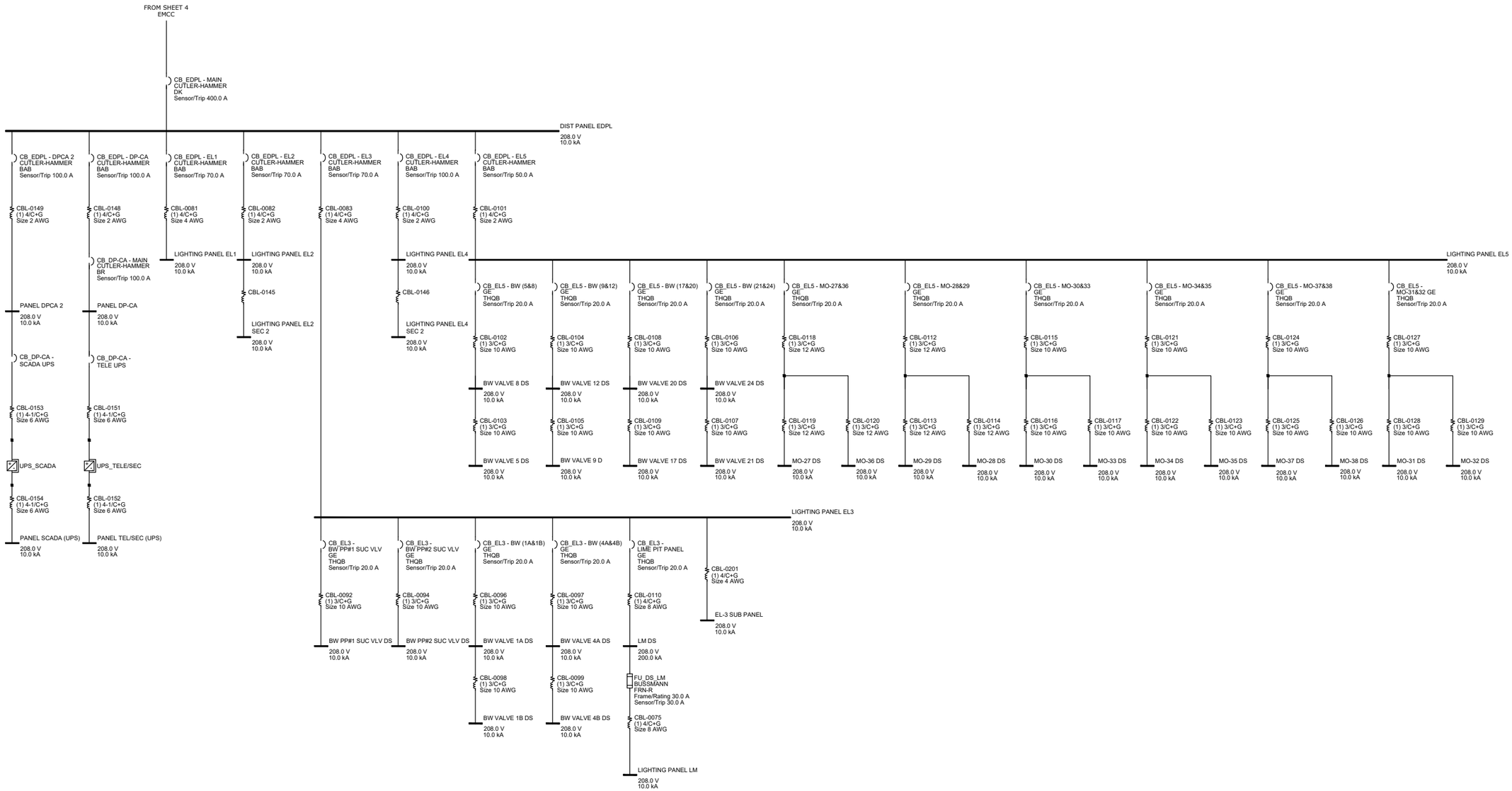

PANEL EDPL IMPEDENCE DIAGRAM
NO SCALE

ABBREVIATIONS:

CB	CIRCUIT BREAKER
CBL	CABLE (INCLUDING WIRING & CONDUIT)
DS	DISCONNECT SWITCH
MTR	MOTOR
PD	PROTECTIVE DEVICE
PNL	PANEL
ST	STARTER
TX	TRANSFORMER

LEGEND:

- TRANSFORMER
- CABLE
- FUSE
- CIRCUIT BREAKER
- MOTOR
- UNINTERRUPTIBLE POWER SUPPLY

Tighe&Bond
Engineers | Environmental Specialists

Springfield Water & Sewer Commission West Parish Filters

Arch Flash Study

Westfield, MA

MARK	DATE	DESCRIPTION

PROJECT NO:	S2057-008
DATE:	05/29/2019
FILE:	Sheet 1-Sheet 6.dwg
DRAWN BY:	LAK
CHECKED:	MJB
APPROVED:	MJR, PBG

FIGURE 6: PANEL EDPL IMPEDENCE DIAGRAM

SCALE: NO SCALE

SHEET 6

Last Saved: 6/26/2019
Plotted On: Jun 26, 2019 - 7:57am By: LKill
Tighe & Bond: J:\S\S2057 SWSC\008 - W Parish Electrical Backup Power Evaluation\Arc Flash\Report\Draft\Appendices\Drawings\AutoCAD\Sheet\Sheet 1-Sheet 6.dwg

Appendix B

Arc Flash Results

ARC FLASH RESULTS

Bus Name	Protective Device Name	Bus kV	Bus Bolted Fault (kA)	Bus Arcing Fault (kA)	Prot Dev Bolted Fault (kA)	Prot Dev Arcing Fault (kA)	Trip/ Delay Time (sec.)	Gap (mm)	Arc Flash Boundary (in)	Working Distance (in)	Incident Energy (cal/cm2)	Notes
MAIN SWGR (CB_MSWGR - MAIN LineSide)	CB_MSWGR - MAIN	0.48	24.76	14.23	6.47	3.72	0.0833	25	223	18	74.5	(*N2) (*N9) (*S0)
MAIN SWGR_ (CB_MSWGR - TIE LineSide)	CB_MSWGR - MAIN	0.48	12.93	8.17	6.47	4.08	2	25	126	18	29.2	(*N9) (*S4)
GENERATOR	CB_GENERATOR	0.48	13.86	8.67	7.76	2.75	2	25	97	18	18.8	(*N9) (*N16) (*S6)
DS_DPL	CB_MCC#4 - DPL	0.208	4.98	2.67	4.98	2.67	2	25	86	18	15.6	(*N9) (*N21a) (*S0)
PANEL EDPL DS	CB_EMCC - EDPL	0.208	4.95	2.66	4.95	2.66	2	25	86	18	15.5	(*N9) (*S0)
DIST PANEL EDPL	FU_PANEL EDPL DS	0.208	4.63	2.53	4.63	2.53	2	25	83	18	14.7	(*N9) (*S0)
DPL	CB_MCC#4 - DPL	0.208	4.48	2.47	4.48	2.47	2	25	80	18	13.9	(*N5) (*N9) (*N21a) (*S3)
LIGHTING PANEL L2 SEC 2	CB_DPL - L2	0.208	4.18	2.36	4.18	2.36	2	25	79	18	13.7	(*N9) (*S0)
LIGHTING PANEL L2 SEC 1	CB_DPL - L2	0.208	3.76	2.19	3.76	2.19	2	25	76	18	12.6	(*N9) (*S0)
CHLOR BLDG DS	CB_EMCC - CHLORINATION BLG	0.48	2.40	1.94	2.40	1.94	2	25	70	18	11.1	(*N9) (*S0)
HVCB (CB_HVCB - MAIN LineSide)	CB_DPWB - CONTROL BLDG	0.48	2.34	1.61	2.34	1.61	2	25	62	18	9.01	(*N3) (*N9) (*S0)
SERV BLDG DS	CB_DPWB - SERVICE BLDG	0.48	1.76	1.49	1.76	1.49	2	25	59	18	8.35	(*N9) (*S0)
HEATER DS	CB_DPWB - SERVICE BLDG	0.48	1.75	1.48	1.75	1.48	2	25	59	18	8.31	(*N9) (*S0)
SRV BLDG PNL DS	FU_SERV BLDG DS	0.208	2.14	1.48	2.14	1.33	2	25	56	18	7.59	(*N9) (*N16) (*S6)
PANEL 2 (CB_PANEL 2 - MAIN LineSide)	CB_DPWB - WTR SHD MNGMNT	0.208	1.81	1.31	1.81	1.31	2	25	54	18	7.31	(*N9) (*S0)
GEN PANEL DS	CB_EMCC - GEN PANEL	0.208	1.71	1.26	1.71	1.26	2	25	53	18	7.01	(*N9) (*S0)
CHALLENGER L DS	CB_EMCC - CHLORINATION BLG	0.48	1.41	1.23	1.41	1.23	2	25	52	18	6.83	(*N9) (*S0)
CHALLENGER R DS	CB_EMCC - CHLORINATION BLG	0.48	1.41	1.23	1.41	1.23	2	25	52	18	6.83	(*N9) (*S0)
COMPRESSOR CHL DS	CB_EMCC - CHLORINATION BLG	0.48	1.41	1.23	1.41	1.23	2	25	52	18	6.83	(*N9) (*S0)
DOM WTR CHL PP DS	CB_EMCC - CHLORINATION BLG	0.48	1.41	1.23	1.41	1.23	2	25	52	18	6.83	(*N9) (*S0)
ELEC HOIST DS	CB_EMCC - CHLORINATION BLG	0.48	1.41	1.23	1.41	1.23	2	25	52	18	6.83	(*N9) (*S0)
TANK RM AUX HT DS	CB_EMCC - CHLORINATION BLG	0.48	1.41	1.23	1.41	1.23	2	25	52	18	6.83	(*N9) (*S0)
TX LCB DS	CB_EMCC - CHLORINATION BLG	0.48	1.41	1.23	1.41	1.23	2	25	52	18	6.83	(*N9) (*S0)
UNIT HEATER DS	CB_EMCC - CHLORINATION BLG	0.48	1.41	1.23	1.41	1.23	2	25	52	18	6.83	(*N9) (*S0)
VANTON PP DS	CB_EMCC - CHLORINATION BLG	0.48	1.41	1.23	1.41	1.23	2	25	52	18	6.83	(*N9) (*S0)
GARAGE PANEL (CB_GARAGE PNL - MAIN LineSide)	CB_DPWB - GARAGE	0.208	1.49	1.14	1.49	1.14	2	25	50	18	6.33	(*N9) (*S0)
PANEL LCB	FU_TX LCB DS	0.208	1.46	1.12	1.46	1.12	2	25	49	18	6.22	(*N9) (*S0)
LVCB	CB_HVCB - LVCB	0.208	1.38	1.08	1.38	1.08	2	25	48	18	5.96	(*N9) (*S0)

Bus Name	Protective Device Name	Bus kV	Bus Bolted Fault (kA)	Bus Arcing Fault (kA)	Prot Dev Bolted Fault (kA)	Prot Dev Arcing Fault (kA)	Trip/ Delay Time (sec.)	Gap (mm)	Arc Flash Boundary (in)	Working Distance (in)	Incident Energy (cal/cm2)	Notes
BLDG 15-18 PANEL	CB_DPWB - BUILDING 15-18	0.208	1.19	0.97	1.19	0.97	2	25	45	18	5.34	(*N9) (*S0)
MCC#4	CB_MSWGR - MCC#4	0.48	23.18	13.45	22.34	12.96	0.066	25	32	18	3.02	(*N21a) (*N21b) (*S0)
MCC#3 (CB_MCC#3 - MAIN LineSide)	CB_MSWGR - TIE	0.48	20.70	12.21	15.54	9.17	0.065	25	31	18	2.89	(*S0)
EMCC	CB_MSWGR - EMCC	0.48	22.02	12.87	22.02	12.87	0.066	25	31	18	2.88	(*N21b) (*S0)
POWER PANEL #5	CB_MSWGR - PP-5	0.48	17.08	10.36	17.08	10.36	0.066	25	27	18	2.28	(*S0)
SRV BLDG PNL 2	FU_SRV BLDG DS	0.208	1.78	1.10	1.78	1.02	0.6985	25	25	18	2.00	(*N3) (*N16) (*S6)
SRV BLDG PNL 1	FU_SRV BLDG DS	0.208	2.00	1.19	2.00	1.09	0.6107	25	24	18	1.89	(*N3) (*N16) (*S6)
SRV BLDG PNL 3	FU_SRV BLDG DS	0.208	2.13	1.25	2.13	1.13	0.5671	25	23	18	1.83	(*N3) (*N16) (*S6)
MCC#2 (CB_MCC#2 - MAIN LineSide)	CB_MSWGR - MCC#2	0.48	12.57	7.97	11.56	7.33	0.066	25	22	18	1.71	(*S0)
MCC#1 (CB_MCC#1 - MAIN LineSide)	CB_MSWGR - MCC#1	0.48	12.51	7.94	11.57	7.35	0.066	25	22	18	1.71	(*S0)
V-BELT BLWR ST	CB_MSWGR - BLOWER V-BELT	0.48	12.49	7.93	11.59	7.36	0.066	25	22	18	1.70	(*S0)
GEN PANEL	FU_GEN PANEL DS	0.208	1.11	0.79	1.11	0.75	0.7922	25	22	18	1.62	(*N3) (*N16) (*S6)
LUNCH ROOM PANEL	CB_L1 - LUNCH RM PNL	0.208	1.37	0.92	1.37	0.88	0.6084	25	20	18	1.48	(*N3) (*N16) (*S6)
LVRH	CB_HVRH - LVRH	0.208	0.79	0.62	0.79	0.60	0.8875	25	20	18	1.41	(*N3) (*N5) (*N16) (*S6)
DPWB (CB_DPWB - MAIN LineSide)	CB_MSWGR - DPWB	0.48	9.31	6.17	9.31	6.17	0.066	25	19	18	1.30	(*S0)
1PH DISC	CB_DPWB - FILTER 1-2	0.48	0.48	0.48	0.48	0.48	2	25	17	18	1.12	(*N9) (*N11) (*S0)
COLD GEN DS	CB_MCC#4 - COLD GEN	0.48	15.45	9.51	15.12	9.30	0.0225	25	13	18	0.71	(*N21a) (*N21b) (*S0)
COLD GEN CP	CB_MCC#4 - COLD GEN	0.48	14.43	8.97	14.11	8.77	0.0225	25	13	18	0.66	(*N21a) (*N21b) (*S0)
DS_HT WTR HTR2	CB_MCC#4 - HT WTR HTR	0.48	3.12	2.06	3.12	2.06	0.0707	25	10	18	0.43	(*N3) (*S5)
POWER PANEL EPH	CB_EMCC - EPH	0.48	10.64	6.92	10.64	6.92	0.0185	25	9	18	0.41	(*S0)
DS_BLWR	CB_V-BEST BLWR ST	0.48	7.46	5.11	6.61	4.52	0.025	25	9	18	0.40	(*S0)
PROCESS WATER PP CP	CB_MCC#3 - PROCSS WTR PP	0.48	8.92	5.95	8.92	5.95	0.0189	25	9	18	0.36	(*N21b) (*S0)
BW VALVE 4B DS	CB_EL3 - BW (4A&4B)	0.208	0.72	0.58	0.72	0.57	0.2296	25	9	18	0.35	(*N3) (*N16) (*S6)
COMPRESSOR #1 DS	CB_EMCC - AIR COMP JOHNSON CNT	0.48	9.14	6.07	9.14	6.07	0.018	25	8	18	0.35	(*S0)
MO-31 DS	CB_EL5 - MO-31&32	0.208	0.74	0.59	0.74	0.58	0.2219	25	8	18	0.34	(*N3) (*N16) (*S6)
MO-37 DS	CB_EL5 - MO-37&38	0.208	0.74	0.59	0.74	0.58	0.2219	25	8	18	0.34	(*N3) (*N16) (*S6)
BW VALVE 20 DS	CB_EL5 - BW (17&20)	0.208	0.75	0.60	0.75	0.59	0.2178	25	8	18	0.34	(*N3) (*N16) (*S6)
BW VALVE 8 DS	CB_EL5 - BW (5&8)	0.208	0.75	0.60	0.75	0.59	0.2178	25	8	18	0.34	(*N3) (*N16) (*S6)
PNL MID	CB_HVRH - LVRH	0.208	0.69	0.59	0.69	0.56	1.007	25	10	18	0.34	(*N3) (*N5) (*N11) (*N16) (*S6)

Bus Name	Protective Device Name	Bus kV	Bus Bolted Fault (kA)	Bus Arcing Fault (kA)	Prot Dev Bolted Fault (kA)	Prot Dev Arcing Fault (kA)	Trip/ Delay Time (sec.)	Gap (mm)	Arc Flash Boundary (in)	Working Distance (in)	Incident Energy (cal/cm2)	Notes
COMPRESSOR #2 DS	CB_EMCC - AIR COMP JOHNSON CNT	0.48	8.70	5.82	8.70	5.82	0.018	25	8	18	0.33	(*S0)
BW VALVE 21 DS	CB_EL5 - BW (21&24)	0.208	0.82	0.64	0.82	0.63	0.1935	25	8	18	0.33	(*N3) (*N16) (*S6)
BW VALVE 9 D	CB_EL5 - BW (9&12)	0.208	0.82	0.64	0.82	0.63	0.1935	25	8	18	0.33	(*N3) (*N16) (*S6)
DS_HT WTR HTR1	CB_MCC#4 - HT WTR HTR	0.48	3.26	2.14	3.26	2.14	0.0516	25	8	18	0.32	(*N3) (*S5)
COMPRESSOR CNTRL TX DS	CB_EMCC - AIR COMP JOHNSON CNT	0.48	8.31	5.60	8.31	5.60	0.018	25	8	18	0.32	(*S0)
BW PP#1 SUC VLV DS	CB_EL3 - BW PP#1 SUC VLV	0.208	0.84	0.65	0.84	0.64	0.1845	25	8	18	0.32	(*N3) (*N16) (*S6)
BW VALVE 1B DS	CB_EL3 - BW (1A&1B)	0.208	0.86	0.66	0.86	0.65	0.1806	25	8	18	0.32	(*N3) (*N16) (*S6)
BW VALVE 4A DS	CB_EL3 - BW (4A&4B)	0.208	0.90	0.68	0.90	0.68	0.1632	25	8	18	0.30	(*N3) (*S6)
60 HP PUMP CONTROL PANEL	CB_MCC#4 - 60 HP PUMP	0.48	6.00	4.24	5.69	4.02	0.0225	25	8	18	0.30	(*N21a) (*N21b) (*S0)
WATER HEATER DS	CB_EPH - WATER HEATER	0.48	6.41	4.48	6.41	4.48	0.0185	25	7	18	0.26	(*S0)
POWER PANEL EPL	CB_EMCC - EPH	0.48	6.11	4.31	6.11	4.31	0.0185	25	7	18	0.25	(*S0)
DS_COMP BLOWER E	CB_PP-5 - COMP BLWR E	0.48	6.87	4.76	6.87	4.76	0.015	25	6	18	0.22	(*S0)
DS_COMP BLOWER W	CB_PP-5 - COMP BLWR W	0.48	6.87	4.76	6.87	4.76	0.015	25	6	18	0.22	(*S0)
CPNL_DUP EJECTOR	CB_EMCC - DUP EJECTOR	0.48	5.30	3.82	5.30	3.82	0.0185	25	6	18	0.22	(*N21b) (*S0)
FILTER 1-2 PANEL	CB_DPWB - FILTER 1-2	0.208	0.21	0.21	0.21	0.21	2	25	8	18	0.22	(*N9) (*N11) (*S0)
EF-17 DS	CB_EMCC - EF 15&16	0.48	5.13	3.71	5.13	3.71	0.0185	25	6	18	0.21	(*S0)
DOM WTR PP CP	CB_MCC#3 - DOM WTR PP	0.48	4.66	3.42	4.66	3.42	0.0197	25	6	18	0.21	(*S0)
CND WTR PP1 DS	CB_MCC#4 - CND WTR PP1	0.48	5.38	3.86	5.38	3.86	0.016	25	6	18	0.19	(*N21a) (*S0)
CND WTR PP2 DS	CB_MCC#4 - CND WTR PP2	0.48	5.38	3.86	5.38	3.86	0.016	25	6	18	0.19	(*N21a) (*S0)
COOLING TWR DS	CB_MCC#4 - COOLING TWR	0.48	4.57	3.36	4.57	3.36	0.0185	25	6	18	0.19	(*S0)
EF-11 (3) DS	CB_MCC#2 - EF-11(3)	0.48	5.30	3.81	5.30	3.81	0.016	25	6	18	0.19	(*N21a) (*S0)
EF-11 (1) DS	CB_MCC#1 - EF-11(1)	0.48	5.29	3.81	5.29	3.81	0.016	25	6	18	0.19	(*N21a) (*S0)
1 TON HOIST DS	CB_EMCC - 1 TON HOIST	0.48	4.51	3.32	4.51	3.32	0.0185	25	6	18	0.19	(*S0)
DS_HV-1	CB_EMCC - HV-1	0.48	5.13	3.71	5.13	3.71	0.016	25	6	18	0.18	(*N21a) (*S0)
DS_DUCT HEATER E	CB_PP-5 - DUCT HTR E	0.48	4.85	3.54	4.85	3.54	0.0165	25	6	18	0.18	(*S0)
DS_DUCT HEATER W	CB_PP-5 - DUCT HTR W	0.48	4.85	3.54	4.85	3.54	0.0165	25	6	18	0.18	(*S0)
EF-16 DS	CB_EMCC - EF 15&16	0.48	4.14	3.09	4.14	3.09	0.0185	25	6	18	0.17	(*S0)
BOILER FD PP1 DS	CB_EPH - BOILER FD PP1	0.48	4.04	3.02	4.04	3.02	0.0185	25	5	18	0.17	(*S0)
BOILER FD PP2 DS	CB_EPH - BOILER FD PP2	0.48	4.04	3.02	4.04	3.02	0.0185	25	5	18	0.17	(*S0)

Bus Name	Protective Device Name	Bus kV	Bus Bolted Fault (kA)	Bus Arcing Fault (kA)	Prot Dev Bolted Fault (kA)	Prot Dev Arcing Fault (kA)	Trip/ Delay Time (sec.)	Gap (mm)	Arc Flash Boundary (in)	Working Distance (in)	Incident Energy (cal/cm2)	Notes
CNTRL_COOLING TWR	CB_MCC#4 - COOLING TWR	0.48	3.97	2.98	3.97	2.98	0.0185	25	5	18	0.17	(*S0)
CHLD WTR PP1 DS	CB_MCC#4 - CHLD WTR PP1	0.48	3.97	2.98	3.97	2.98	0.016	25	5	18	0.14	(*N21a) (*S0)
CHLD WTR PP2 DS	CB_MCC#4 - CHLD WTR PP2	0.48	3.97	2.98	3.97	2.98	0.016	25	5	18	0.14	(*N21a) (*S0)
EF-11 (2) DS	CB_MCC#1 - EF-11(2)	0.48	3.95	2.97	3.95	2.97	0.016	25	5	18	0.14	(*N21a) (*S0)
CAUS XFER PP1 DS	CB_EMCC - CAUS XFER PP1	0.48	3.93	2.95	3.93	2.95	0.016	25	5	18	0.14	(*N21a) (*S0)
CAUS XFER PP2 DS	CB_EMCC - CAUS XFER PP2	0.48	3.93	2.95	3.93	2.95	0.016	25	5	18	0.14	(*N21a) (*S0)
LIGHTING PANEL L1	CB_DPL - L1	0.208	3.49	1.77	3.49	1.77	0.0264	25	5	18	0.13	(*N3) (*S5)
BOILER #2 DS	CB_EPH - BOILER #2	0.48	3.05	2.38	3.05	2.38	0.0185	25	5	18	0.13	(*S0)
MO-27 DS	CB_EL5 - MO-27&36	0.208	0.31	0.31	0.31	0.31	0.8143	25	6	18	0.13	(*N11) (*S2)
BOILER #2 CP	CB_EPH - BOILER #2	0.48	2.77	2.19	2.77	2.19	0.0185	25	4	18	0.12	(*S0)
DS_HV-4	CB_EMCC - HV-4	0.48	3.18	2.46	3.18	2.46	0.016	25	4	18	0.12	(*N21a) (*S0)
MO-36 DS	CB_EL5 - MO-27&36	0.208	0.34	0.34	0.34	0.34	0.6498	25	6	18	0.11	(*N11) (*S1)
BOILER #1 DS	CB_EPH - BOILER #1	0.48	2.45	1.97	2.45	1.97	0.0185	25	4	18	0.11	(*S0)
MO-28 DS	CB_EL5 - MO-28&29	0.208	0.39	0.39	0.39	0.39	0.5042	25	5	18	0.10	(*N11) (*S0)
BOILER #1 CP	CB_EPH - BOILER #1	0.48	2.26	1.84	2.26	1.84	0.0185	25	4	18	0.10	(*S0)
AC-1 DS	CB_MCC#4 - AC-1	0.48	2.38	1.93	2.38	1.93	0.016	25	4	18	0.09	(*N21a) (*S0)
MO-33 DS	CB_EL5 - MO-30&33	0.208	0.44	0.44	0.44	0.44	0.3824	25	5	18	0.09	(*N11) (*S3)
SUMP PUMP DS	CB_MCC#1 - SUMP PUMP	0.48	2.22	1.81	2.22	1.81	0.016	25	4	18	0.08	(*N21a) (*S0)
DEHUMIDIFIER DS	CB_MCC#4 - DEHUMID	0.48	1.80	1.52	1.80	1.52	0.0185	25	3	18	0.08	(*S0)
MO-30 DS	CB_EL5 - MO-30&33	0.208	0.49	0.49	0.49	0.49	0.3118	25	5	18	0.08	(*N11) (*S3)
CNTRL_DEHUMIDIFIER	CB_MCC#4 - DEHUMID	0.48	1.70	1.44	1.70	1.44	0.0187	25	3	18	0.08	(*S0)
42" BYPASS TEMPORARY EQUIPMENT	CB_DPWB - 42" BYPSS	0.48	1.91	1.59	1.91	1.59	0.0168	25	3	18	0.08	(*S0)
MO-29 DS	CB_EL5 - MO-28&29	0.208	0.51	0.51	0.51	0.51	0.2897	25	5	18	0.07	(*N11) (*S3)
DS_LAB STERILIZER	CB_DPL - LAB AUTOCLAVE	0.208	4.47	2.47	4.47	2.47	0.01	25	3	18	0.07	(*S0)
MO-34 DS	CB_EL5 - MO-34&35	0.208	0.55	0.55	0.55	0.55	0.2506	25	4	18	0.07	(*N11) (*S3)
LIGHTING PANEL EL4	CB_EDPL - EL4	0.208	4.13	2.34	4.13	2.34	0.01	25	3	18	0.07	(*S0)
LIGHTING PANEL EL4 SEC 2	CB_EDPL - EL4	0.208	4.04	2.30	4.04	2.30	0.01	25	3	18	0.07	(*S0)
BW VALVE 17 DS	CB_EL5 - BW (17&20)	0.208	0.58	0.58	0.58	0.58	0.2252	25	4	18	0.07	(*N11) (*S3)
BW VALVE 5 DS	CB_EL5 - BW (5&8)	0.208	0.58	0.58	0.58	0.58	0.2252	25	4	18	0.07	(*N11) (*S3)

Bus Name	Protective Device Name	Bus kV	Bus Bolted Fault (kA)	Bus Arcing Fault (kA)	Prot Dev Bolted Fault (kA)	Prot Dev Arcing Fault (kA)	Trip/ Delay Time (sec.)	Gap (mm)	Arc Flash Boundary (in)	Working Distance (in)	Incident Energy (cal/cm2)	Notes
LIGHTING PANEL EL2	CB_EDPL - EL2	0.208	3.87	2.23	3.87	2.23	0.01	25	3	18	0.07	(*S0)
BW VALVE 1A DS	CB_EL3 - BW (1A&1B)	0.208	1.13	0.80	1.13	0.80	0.03	25	3	18	0.06	(*N3) (*S5)
HVRH	CB_DPWB - REG HOUSE	0.48	1.52	1.31	1.52	1.31	0.0175	25	3	18	0.06	(*S0)
LIGHTING PANEL EL2 SEC 2	CB_EDPL - EL2	0.208	3.78	2.20	3.78	2.20	0.01	25	3	18	0.06	(*S0)
BW PP#2 SUC VLV DS	CB_EL3 - BW PP#2 SUC VLV	0.208	0.62	0.62	0.62	0.62	0.1967	25	4	18	0.06	(*N11) (*S3)
GARAGE DS	CB_DPWB - GARAGE	0.48	1.38	1.21	1.38	1.21	0.0179	25	3	18	0.06	(*S0)
PANEL DP-CA	CB_EDPL - DP-CA	0.208	3.13	1.92	3.13	1.92	0.01	25	3	18	0.06	(*S0)
PANEL DPCA 2	CB_EDPL - DPCA 2	0.208	3.13	1.92	3.13	1.92	0.01	25	3	18	0.06	(*S0)
PANEL 3	CB_PNL 2 - PNL 3	0.208	1.55	1.18	1.55	1.18	0.017	25	3	18	0.06	(*S0)
LIGHTING PANEL EL1	CB_EDPL - EL1	0.208	3.11	1.91	3.11	1.91	0.01	25	3	18	0.06	(*S0)
EF-10 DS	CB_MCC#4 - EF-10	0.48	1.38	1.21	1.38	1.21	0.016	25	3	18	0.05	(*N21a) (*S0)
LOCAL DS_LAB STERILIZER	CB_DPL - LAB AUTOCLAVE	0.208	2.91	1.83	2.91	1.83	0.01	25	3	18	0.05	(*S0)
LIGHTING PANEL L4	CB_DPL - L4	0.208	2.78	1.77	2.78	1.77	0.01	25	3	18	0.05	(*S0)
COMPRESSOR DS	CB_GARAGE PNL - COMPRESSOR	0.208	0.67	0.67	0.67	0.67	0.1494	25	4	18	0.05	(*N11) (*S1)
GAS PUMP DS	CB_GARAGE PNL - GAS PUMP	0.208	0.67	0.67	0.67	0.67	0.1494	25	4	18	0.05	(*N11) (*S1)
HV-5 DS	CB_EMCC - HV-5	0.48	1.21	1.08	1.21	1.08	0.016	25	3	18	0.05	(*N21a) (*S0)
GARAGE DOOR DS	CB_GARAGE PNL - DOOR DS	0.208	1.27	1.02	1.27	1.02	0.017	25	3	18	0.05	(*S0)
LIGHTING PANEL EL3	CB_EDPL - EL3	0.208	2.50	1.64	2.50	1.64	0.01	25	3	18	0.05	(*S0)
PANEL SCADA (UPS)	CB_EDPL - DPCA 2	0.208	2.50	1.64	2.50	1.64	0.01	25	3	18	0.05	(*S0)
PANEL TEL/SEC (UPS)	CB_EDPL - DP-CA	0.208	2.50	1.64	2.50	1.64	0.01	25	3	18	0.05	(*S0)
EL-3 SUB PANEL	CB_EDPL - EL3	0.208	2.47	1.63	2.47	1.63	0.01	25	2	18	0.05	(*S0)
HV-3 DS	CB_EMCC - HV-3	0.48	1.12	1.01	1.12	1.01	0.016	25	2	18	0.04	(*N21a) (*S0)
LM DS	CB_EDPL - EL3	0.208	2.27	1.54	2.27	1.54	0.01	25	2	18	0.04	(*N5) (*S0)
LIGHTING PANEL L3	CB_DPL - L3	0.208	2.26	1.53	2.26	1.53	0.01	25	2	18	0.04	(*S0)
LIGHTING PANEL EL5	CB_EDPL - EL5	0.208	1.82	1.31	1.82	1.31	0.01	25	2	18	0.04	(*S0)
LCS DS	CB_DPL - LCS	0.208	1.22	0.99	1.22	0.99	0.01	25	2	18	0.03	(*S0)
LIGHTING PANEL LCS	CB_DPL - LCS	0.208	1.21	0.98	1.21	0.98	0.01	25	2	18	0.03	(*S0)
BW VALVE 12 DS	CB_EDPL - EL5	0.208	1.19	0.98	1.19	0.98	0.01	25	2	18	0.03	(*N5) (*S0)
BW VALVE 24 DS	CB_EDPL - EL5	0.208	1.19	0.98	1.19	0.98	0.01	25	2	18	0.03	(*N5) (*S0)

Bus Name	Protective Device Name	Bus kV	Bus Bolted Fault (kA)	Bus Arcing Fault (kA)	Prot Dev Bolted Fault (kA)	Prot Dev Arcing Fault (kA)	Trip/ Delay Time (sec.)	Gap (mm)	Arc Flash Boundary (in)	Working Distance (in)	Incident Energy (cal/cm2)	Notes
FCV-102 DS	CB_DPL - LCS	0.208	0.99	0.85	0.99	0.85	0.01	25	2	18	0.02	(*N5) (*S0)
MO-32 DS	CB_EDPL - EL5	0.208	0.89	0.80	0.89	0.80	0.01	25	2	18	0.02	(*N5) (*S0)
MO-38 DS	CB_EDPL - EL5	0.208	0.89	0.80	0.89	0.80	0.01	25	2	18	0.02	(*N5) (*S0)
LIGHTING PANEL LM	FU_DS_LM	0.208	0.48	0.48	0.48	0.48	0.0342	25	1	18	0.01	(*N11) (*S5)
MO-35 DS	CB_EDPL - EL5	0.208	0.70	0.70	0.70	0.70	0.01	25	1	18	0.00	(*N5) (*N11) (*S0)

(*N11) - Out of IEEE 1584 Range, Lee Equation Used. Applicable for Open Air only. Existing Equipment type is not Open Air!
(*N2) < 80% Cleared Fault Threshold
(*N3) - Arcing Current Low Tolerances Used
(*N5) - Miscoordinated, Upstream Device Tripped
(*N9) - Max Arcing Duration Reached
(*N16) - Trip Time Recalculated
(*N21a) - Equipment Evaluation Failed, OVERDUTIED PROTECTIVE DEVICE EQUIPMENT FOUND - Inappropriate to provide arc-flash hazard results.
(*N21b) - Equipment Evaluation Failed, OVERDUTIED BUS EQUIPMENT FOUND - Inappropriate to provide arc-flash hazard results.
IEEE 1584 2002 Bus + Line Side - Comprehensive Fault80% Cleared Fault Threshold, mis-coordination checked

Worst Case:
(*S0) - Infinite Bus - Base
(*S1) - 10kA Fault
(*S2) - 5kA Fault
(*S3) - 2kA Fault
(*S4) - 1kA Fault
(*S5) - 500A Fault
(*S6) - Generator

Appendix C

Overcurrent Protective Device Settings

OVERCURRENT PROTECTIVE DEVICE SETTINGS

Circuit Breakers

LV Breakers Name/Type	Description	Model	Frame/ Sensor/ Plug	Settings
CB_DP-CA - MAIN	15-100A, Fixed T, Adj. M	BR	100.0A	Thermal Curve (Fixed)
Thermal Magnetic			100.0A	
			100.0A	
CB_DPL - L1	100-225A, UL	EDB	150.0A	Fixed
Thermal Magnetic			150.0A	
			150.0A	
CB_DPL - L2	100-225A, UL	EDB	225.0A	Fixed
Thermal Magnetic			200.0A	
			200.0A	
CB_DPL - L3	15-100A	BAB	100.0A	Fixed
Thermal Magnetic			100.0A	
			100.0A	
CB_DPL - L4	15-100A	BAB	100.0A	Fixed
Thermal Magnetic			100.0A	
			100.0A	
CB_DPL - LAB AUTOCLAVE	15-100A	BAB	100.0A	Fixed
Thermal Magnetic			100.0A	
			100.0A	
CB_DPL - LCS	10-70A	BAB	20.0A	Fixed
Thermal Magnetic			20.0A	
			20.0A	
CB_DPL - MAIN	250-400A	DK	400.0A	Thermal Curve (Fixed)
Thermal Magnetic			400.0A	INST (5-10 x Trip) 10 (4000A)
			400.0A	
CB_DPWB - 42" BYPSS	15-125A	BJ	50.0A	Fixed
Thermal Magnetic			50.0A	
			50.0A	
CB_DPWB - BUILDING 15-18	LSI, 100AS	HJ	150.0A	Phase
Static Trip			100.0A	Ir (35-100A); tr(0.5-16s) 45 (45A); 16
			100.0A	Isd (1.5 - 10 x Ir) 10 (450A)
				tsd (0 - 0.4) 0.4 (I^s T Off)
				Ii (1.5 - 15 x In) 12 (1200A)
				Ground
				Ig (0.2 - 1 x In) 1.0 (100A)
				tg (0 - 0.4) 0.2 (I^s T Off)
CB_DPWB - CONTROL BLDG	15-150A	HJ	100.0A	Fixed
Thermal Magnetic			100.0A	
			100.0A	
CB_DPWB - FILTER 1-2	15-125A	BJ	20.0A	Fixed
Thermal Magnetic			20.0A	
			20.0A	

LV Breakers Name/Type	Description	Model	Frame/ Sensor/ Plug	Settings
CB_DPWB - GARAGE Thermal Magnetic	15-125A	BJ	50.0A 50.0A 50.0A	Fixed
CB_DPWB - MAIN Static Trip	LSI, 400AS	LJ	400.0A 400.0A 400.0A	Phase Ir (125-400A); tr(0.5-16s) 400 (400A); 8 Isd (1.5 - 10 x Ir) 6.5 (2600A) tsd (0 - 0.4) 0.3 (I^s T Off) Ii (1.5 - 12 x In) 5.5 (2200A) Ground Ig (0.2 - 1 x In) 0.5 (200A) tg (0 - 0.4) 0.3 (I^s T Off)
CB_DPWB - REG HOUSE Thermal Magnetic	15-125A	BJ	50.0A 50.0A 50.0A	Fixed
CB_DPWB - SERVICE BLDG Thermal Magnetic	15-150A	HJ	100.0A 100.0A 100.0A	Fixed
CB_DPWB - WTR SHD MNGMNT Thermal Magnetic	15-125A	BJ	50.0A 50.0A 50.0A	Fixed
CB_EDPL - DP-CA Thermal Magnetic	15-100A	BAB	100.0A 100.0A 100.0A	Fixed
CB_EDPL - DPCA 2 Thermal Magnetic	15-100A	BAB	100.0A 100.0A 100.0A	Fixed
CB_EDPL - EL1 Thermal Magnetic	15-100A	BAB	70.0A 70.0A 70.0A	Fixed
CB_EDPL - EL2 Thermal Magnetic	15-100A	BAB	70.0A 70.0A 70.0A	Fixed
CB_EDPL - EL3 Thermal Magnetic	15-100A	BAB	70.0A 70.0A 70.0A	Fixed
CB_EDPL - EL4 Thermal Magnetic	15-100A	BAB	100.0A 100.0A 100.0A	Fixed
CB_EDPL - EL5 Thermal Magnetic	15-100A	BAB	50.0A 50.0A 50.0A	Fixed
CB_EDPL - MAIN Thermal Magnetic	250-400A	DK	400.0A 400.0A 400.0A	Thermal Curve (Fixed) INST (5-10 x Trip) 10 (4000A)
CB_EL3 - BW (1A&1B) Thermal Magnetic	15-100A	THQB	20.0A 20.0A 20.0A	Fixed
CB_EL3 - BW (4A&4B) Thermal Magnetic	15-100A	THQB	20.0A 20.0A 20.0A	Fixed

LV Breakers Name/Type	Description	Model	Frame/ Sensor/ Plug	Settings
CB_EL3 - BW PP#1 SUC VLV Thermal Magnetic	15-100A	THQB	20.0A 20.0A 20.0A	Fixed
CB_EL3 - BW PP#2 SUC VLV Thermal Magnetic	15-100A	THQB	20.0A 20.0A 20.0A	Fixed
CB_EL3 - LIME PIT PANEL Thermal Magnetic	15-100A	THQB	20.0A 20.0A 20.0A	Fixed
CB_EL5 - BW (17&20) Thermal Magnetic	15-100A	THQB	20.0A 20.0A 20.0A	Fixed
CB_EL5 - BW (21&24) Thermal Magnetic	15-100A	THQB	20.0A 20.0A 20.0A	Fixed
CB_EL5 - BW (5&8) Thermal Magnetic	15-100A	THQB	20.0A 20.0A 20.0A	Fixed
CB_EL5 - BW (9&12) Thermal Magnetic	15-100A	THQB	20.0A 20.0A 20.0A	Fixed
CB_EL5 - MO-27&36 Thermal Magnetic	15-100A	THQB	20.0A 20.0A 20.0A	Fixed
CB_EL5 - MO-28&29 Thermal Magnetic	15-100A	THQB	20.0A 20.0A 20.0A	Fixed
CB_EL5 - MO-30&33 Thermal Magnetic	15-100A	THQB	20.0A 20.0A 20.0A	Fixed
CB_EL5 - MO-31&32 Thermal Magnetic	15-100A	THQB	20.0A 20.0A 20.0A	Fixed
CB_EL5 - MO-34&35 Thermal Magnetic	15-100A	THQB	20.0A 20.0A 20.0A	Fixed
CB_EL5 - MO-37&38 Thermal Magnetic	15-100A	THQB	20.0A 20.0A 20.0A	Fixed
CB_EMCC - 1 TON HOIST Thermal Magnetic	15-150A	THED	50.0A 20.0A 20.0A	Fixed
CB_EMCC - AIR COMP JOHNSO Thermal Magnetic	15-150A	THED	80.0A 70.0A 70.0A	Fixed
CB_EMCC - CHLORINATION BL Thermal Magnetic	15-150A	THED	80.0A 70.0A 70.0A	Fixed

LV Breakers Name/Type	Description	Model	Frame/ Sensor/ Plug	Settings
CB_EMCC - DUP EJECTOR Thermal Magnetic	15-150A	THED	50.0A 20.0A 20.0A	Fixed
CB_EMCC - EDPL Thermal Magnetic	15-150A	THED	150.0A 150.0A 150.0A	Fixed
CB_EMCC - EF 15&16 Thermal Magnetic	15-150A	THED	50.0A 20.0A 20.0A	Fixed
CB_EMCC - EPH Thermal Magnetic	15-150A	THED	50.0A 50.0A 50.0A	Fixed
CB_EMCC - GEN PANEL Thermal Magnetic	15-150A	THED	50.0A 50.0A 50.0A	Fixed
CB_EPH - BOILER #1 Thermal Magnetic	15-150A	THED	50.0A 15.0A 15.0A	Fixed
CB_EPH - BOILER #2 Thermal Magnetic	15-150A	THED	50.0A 15.0A 15.0A	Fixed
CB_EPH - BOILER FD PP1 Thermal Magnetic	15-150A	THED	50.0A 15.0A 15.0A	Fixed
CB_EPH - BOILER FD PP2 Thermal Magnetic	15-150A	THED	50.0A 15.0A 15.0A	Fixed
CB_EPH - WATER HEATER Thermal Magnetic	15-150A	THED	50.0A 35.0A 35.0A	Fixed
CB_GARAGE PNL - COMPRESS Thermal Magnetic	15-125A	QP	20.0A 20.0A 20.0A	Thermal Curve (Fixed) INST Fixed (575A)
CB_GARAGE PNL - DOOR DS Thermal Magnetic	15-125A	QP	20.0A 20.0A 20.0A	Thermal Curve (Fixed) INST Fixed (575A)
CB_GARAGE PNL - GAS PUMP Thermal Magnetic	15-125A	QP	20.0A 20.0A 20.0A	Thermal Curve (Fixed) INST Fixed (575A)
CB_GARAGE PNL - MAIN Thermal Magnetic	15-125A	QP	100.0A 100.0A 100.0A	Thermal Curve (Fixed) INST Fixed (750A)
CB_GENERATOR Static Trip	LI, 250-1200A, UL	PG	1200.0A 1200.0A 1200.0A	LTPU (A);LTD 1 (1200A); 4 INST (PG 250-1200) 6 (7200A)
CB_HVCB - LVCB Thermal Magnetic	15-125A	BG	50.0A 45.0A 45.0A	Fixed

LV Breakers Name/Type	Description	Model	Frame/ Sensor/ Plug	Settings
CB_HVCB - MAIN Static Trip	LI, 250AS	JG	250.0A 250.0A 250.0A	Ir (70-250A); tr (0.5-16s) 100 (100A); 16 Ii (1.5 - 12 x In) 4 (1000A)
CB_HVRH - LVRH Thermal Magnetic	15-125A	EG	25.0A 25.0A 25.0A	Fixed
CB_HVRH - MAIN Thermal Magnetic	15-150A	HG	50.0A 50.0A 50.0A	Fixed
CB_L1 - LUNCH RM PNL Thermal Magnetic	15-100A	THQB	50.0A 50.0A 50.0A	Fixed
CB_LCS - FCV-102 Thermal Magnetic	15-100A	THQB	20.0A 20.0A 20.0A	Fixed
CB_LVRH - MAIN Thermal Magnetic	15-150A	HD	60.0A 60.0A 60.0A	Fixed
CB_LVRH - PNL MID Thermal Magnetic	15-100A	QO	60.0A 60.0A 60.0A	Fixed (730-6, 60A)
CB_MCC#1 - MAIN Thermal Magnetic	125-600A	TJK	400.0A 300.0A 300.0A	Thermal Curve (Fixed) INST (3-10 x Trip) 7 (2100A)
CB_MCC#2 - MAIN Thermal Magnetic	125-600A	TJK	400.0A 300.0A 300.0A	Thermal Curve (Fixed) INST (3-10 x Trip) 7 (2100A)
CB_MCC#3 - DOM WTR PP Thermal Magnetic	15-150A	THED	100.0A 100.0A 100.0A	Fixed
CB_MCC#3 - MAIN Thermal Magnetic	125-600A	TJK	600.0A 500.0A 500.0A	Thermal Curve (Fixed) INST (3-10 x Trip) HI (5000A)
CB_MCC#3 - PROCSS WTR PP Thermal Magnetic	15-150A	THED	100.0A 100.0A 100.0A	Fixed
CB_MCC#3 - WTR WSH PP1 Thermal Magnetic	125-600A	TJK	400.0A 300.0A 300.0A	Thermal Curve (Fixed) INST (3-10 x Trip) HI (3000A)
CB_MCC#3 - WTR WSH PP2 Thermal Magnetic	125-600A	TJK	400.0A 300.0A 300.0A	Thermal Curve (Fixed) INST (3-10 x Trip) 7 (2100A)
CB_MCC#4 - 60 HP PUMP Thermal Magnetic	70-225A	TFK	225.0A 200.0A 200.0A	Thermal Curve (Fixed) INST (4.5-10 x Trip) HI (2000A)
CB_MCC#4 - COLD GEN Thermal Magnetic	70-225A	TFJ	225.0A 200.0A 200.0A	Thermal Curve (Fixed) INST (4.5-10 x Trip) HI (2000A)

LV Breakers Name/Type	Description	Model	Frame/ Sensor/ Plug	Settings
CB_MCC#4 - COOLING TWR Thermal Magnetic	15-150A	THED	50.0A 30.0A 30.0A	Fixed
CB_MCC#4 - DEHUMID Thermal Magnetic	15-150A	THED	50.0A 20.0A 20.0A	Fixed
CB_MCC#4 - DPL Thermal Magnetic	70-225A	TFJ	225.0A 150.0A 150.0A	Thermal Curve (Fixed) INST (4.5-10 x Trip) HI (1500A)
CB_MCC#4 - HT WTR HTR Thermal Magnetic	15-150A	THED	50.0A 40.0A 40.0A	Fixed
CB_MSWGR - BLOWER V-BELT Static Trip	LSI, 800AF, 200-800AP	MDN-608	800.0A 800.0A 800.0A	Phase Ir, (0.4-1.0 x P) 0.4 (320A) LTD, (2-24 Sec.) 4 STPU, (2-10 x Ir) 4 (1280A) STD, (0.1-0.5 Sec.) 0.2 (I^s T Off) INST, (2-14 x P) 2 (1600A) Ground GFPU, (0.25 - 1 x In) 0.25 (200A) GFD, (0.1 - 0.5s) 0.3 (I^s T Off)
CB_MSWGR - DPWB Static Trip	LSI, 800AF, 200-800AP	MDN-608	800.0A 800.0A 800.0A	Phase Ir, (0.4-1.0 x P) 0.5 (400A) LTD, (2-24 Sec.) 7 STPU, (2-10 x Ir) 6 (2400A) STD, (0.1-0.5 Sec.) 0.3 (I^s T Off) INST, (2-14 x P) 3 (2400A) Ground GFPU, (0.25 - 1 x In) 0.25 (200A) GFD, (0.1 - 0.5s) 0.3 (I^s T Off)
CB_MSWGR - EMCC Static Trip	LSI, 800AF, 200-800AP	MDN-608	800.0A 800.0A 800.0A	Phase Ir, (0.4-1.0 x P) 0.4 (320A) LTD, (2-24 Sec.) 7 STPU, (2-10 x Ir) 6 (1920A) STD, (0.1-0.5 Sec.) 0.2 (I^s T Off) INST, (2-14 x P) 3 (2400A) Ground GFPU, (0.25 - 1 x In) 0.25 (200A) GFD, (0.1 - 0.5s) 0.3 (I^s T Off)
CB_MSWGR - GENERATOR Static Trip	LSI, 800-6000AF	MDS-616	1600.0A 1600.0A 1600.0A	Phase LTPU, (0.4 - 1 x In) 1.000 (1600A) LTD-I2T, (2-24s) 2 STPU, (200-1200A SF) 2.500 (4000A) STD-I2T, (0.1 - 0.5s) 0.15 (I^s T Off) INST, (200-1200A STD) 5.00 (8000A) Ground GFPU, (1150, 0.25 - 1) 0.75 (1200A) GFD, (0.1 - 0.5s) 0.5 (I^s T Off)

LV Breakers Name/Type	Description	Model	Frame/ Sensor/ Plug	Settings
CB_MSWGR - MAIN Static Trip	LSI, 800-6000AF	MDN-616	1600.0A 1600.0A 1600.0A	Phase LTPU, (0.4 - 1 x In) 1.000 (1600A) LTD-I2T, (2-24s) 2 STPU, (200-1200A SF) 2.500 (4000A) STD-I2T, (0.1 - 0.5s) 0.15 (I^s T Off) INST, (200-1200A STD) 5.00 (8000A) Ground GFPU, (1150, 0.25 - 1) 0.75 (1200A) GFD, (0.1 - 0.5s) 0.5 (I^s T Off)
CB_MSWGR - MCC#1 Static Trip	LSI, 800AF, 200-800AP	MDN-608	800.0A 800.0A 800.0A	Phase Ir, (0.4-1.0 x P) 0.4 (320A) LTD, (2-24 Sec.) 2 STPU, (2-10 x Ir) 2 (640A) STD, (0.1-0.5 Sec.) 0.2 (I^s T Off) INST, (2-14 x P) 2 (1600A) Ground GFPU, (0.25 - 1 x In) 0.25 (200A) GFD, (0.1 - 0.5s) 0.3 (I^s T Off)
CB_MSWGR - MCC#2 Static Trip	LSI, 800AF, 200-800AP	MDN-608	800.0A 800.0A 800.0A	Phase Ir, (0.4-1.0 x P) 0.4 (320A) LTD, (2-24 Sec.) 2 STPU, (2-10 x Ir) 2 (640A) STD, (0.1-0.5 Sec.) 0.2 (I^s T Off) INST, (2-14 x P) 2 (1600A) Ground GFPU, (0.25 - 1 x In) 0.25 (200A) GFD, (0.1 - 0.5s) 0.3 (I^s T Off)
CB_MSWGR - MCC#3 Static Trip	LSI, 800AF, 200-800AP	MDN-608	800.0A 800.0A 800.0A	Phase Ir, (0.4-1.0 x P) 0.8 (640A) LTD, (2-24 Sec.) 7 STPU, (2-10 x Ir) 6 (3840A) STD, (0.1-0.5 Sec.) 0.2 (I^s T Off) INST, (2-14 x P) 4 (3200A) Ground GFPU, (0.25 - 1 x In) 0.5 (400A) GFD, (0.1 - 0.5s) 0.3 (I^s T Off)
CB_MSWGR - MCC#4 Static Trip	LSI, 800AF, 200-800AP	MDN-608	800.0A 800.0A 800.0A	Phase Ir, (0.4-1.0 x P) 1 (800A) LTD, (2-24 Sec.) 4 STPU, (2-10 x Ir) 4 (3200A) STD, (0.1-0.5 Sec.) 0.2 (I^s T Off) INST, (2-14 x P) 3 (2400A) Ground GFPU, (0.25 - 1 x In) 0.5 (400A) GFD, (0.1 - 0.5s) 0.3 (I^s T Off)
CB_MSWGR - PP-5 Static Trip	LSI, 800AF, 200-800AP	MDN-608	800.0A 800.0A 800.0A	Phase Ir, (0.4-1.0 x P) 0.4 (320A) LTD, (2-24 Sec.) 2 STPU, (2-10 x Ir) 4 (1280A) STD, (0.1-0.5 Sec.) 0.5 (I^s T Off) INST, (2-14 x P) 2 (1600A) Ground GFPU, (0.25 - 1 x In) 0.25 (200A) GFD, (0.1 - 0.5s) 0.3 (I^s T Off)

LV Breakers Name/Type	Description	Model	Frame/ Sensor/ Plug	Settings
CB_MSWGR - TIE	LSI, 800-6000AF	MDN-616	1600.0A	Phase
Static Trip			1600.0A	LTPU, (0.4 - 1 x In) 1.000 (1600A)
			1600.0A	LTD-I2T, (2-24s) 2
				STPU, (200-1200A SF) 2.500 (4000A)
				STD-I2T, (0.1 - 0.5s) 0.15 (I^s T Off)
				INST, (200-1200A STD) 4.00 (6400A)
				Ground
				GFPU, (1150, 0.25 - 1) 0.5 (800A)
				GFD, (0.1 - 0.5s) 0.4 (I^s T Off)
CB_PANEL 2 - MAIN	15-125A	QP	100.0A	Thermal Curve (Fixed)
Thermal Magnetic			100.0A	INST Fixed (750A)
			100.0A	
CB_PNL 2 - PNL 3	15-125A	QP	20.0A	Thermal Curve (Fixed)
Thermal Magnetic			20.0A	INST Fixed (575A)
			20.0A	
CB_PP-5 - COMP BLWR E	15-225A	FD	60.0A	Fixed
Thermal Magnetic			60.0A	
			60.0A	
CB_PP-5 - COMP BLWR W	15-225A	FD	60.0A	Fixed
Thermal Magnetic			60.0A	
			60.0A	
CB_PP-5 - DUCT HTR E	15-225A	FD	40.0A	Fixed
Thermal Magnetic			40.0A	
			40.0A	
CB_PP-5 - DUCT HTR W	15-225A	FD	40.0A	Fixed
Thermal Magnetic			40.0A	
			40.0A	
CB_V-BEST BLWR ST	125-600A	TJK	400.0A	Thermal Curve (Fixed)
Thermal Magnetic			225.0A	INST (3-10 x Trip) LO (1350A)
			225.0A	

MCP

Name/Type	Description	Frame/Model	Frame/Trip	Settings
CB_EMCC - CAUS XFER PP1	3A	TEC	3.0A	INST (LO-HI) HI (38A)
			3.0A	
CB_EMCC - CAUS XFER PP2	3A	TEC	3.0A	INST (LO-HI) HI (38A)
			3.0A	

LV Breakers Name/Type	Description	Model	Frame/ Sensor/ Plug	Settings
CB_EMCC - HV-1	7A	TEC	7.0A 7.0A	INST (LO-HI) HI (90A)
CB_EMCC - HV-3	3A	TEC	3.0A 3.0A	INST (LO-HI) HI (38A)
CB_EMCC - HV-4	7A	TEC	7.0A 7.0A	INST (LO-HI) HI (90A)
CB_EMCC - HV-5	3A	TEC	3.0A 3.0A	INST (LO-HI) HI (38A)
CB_MCC#1 - EF-11(1)	7A	TEC	7.0A 7.0A	INST (LO-HI) HI (90A)
CB_MCC#1 - EF-11(2)	7A	TEC	7.0A 7.0A	INST (LO-HI) HI (90A)
CB_MCC#1 - SUMP PUMP	3A	TEC	3.0A 3.0A	INST (LO-HI) LO (8A)
CB_MCC#2 - EF-11(3)	7A	TEC	7.0A 7.0A	INST (LO-HI) HI (90A)
CB_MCC#4 - AC-1	7A	TEC	7.0A 7.0A	INST (LO-HI) HI (90A)
CB_MCC#4 - CHLD WTR PP1	15A	TEC	15.0A 15.0A	INST (LO-HI) HI (198A)
CB_MCC#4 - CHLD WTR PP2	15A	TEC	15.0A 15.0A	INST (LO-HI) HI (198A)
CB_MCC#4 - CND WTR PP1	7A	TEC	7.0A 7.0A	INST (LO-HI) HI (90A)
CB_MCC#4 - CND WTR PP2	7A	TEC	7.0A 7.0A	INST (LO-HI) HI (90A)
CB_MCC#4 - EF-10	7A	TEC	7.0A 7.0A	INST (LO-HI) HI (90A)

FUSES

LV Fuses Name/Type	Description	Frame/Model	Catridge/Trip
FU_DPL DS	1-600A	FRS-R	400.0A 400.0A
FU_DS_LM	0.1-600A	FRN-R	30.0A 30.0A
FU_GEN PANEL DS	0.1-600A	FRN-R	80.0A 80.0A
FU_PANEL EDPL DS	1-600A	FRS-R	400.0A 400.0A
FU_SERV BLDG DS	70-600A	NOS	100.0A 100.0A
FU_SRV BLDG DS	70-600A	NOS	110.0A 110.0A
FU_TX LCB DS	1-600A	FRS-R	60.0A 60.0A

Appendix D

Bus Evaluation

BUS EVALUATION

Bus	Status	Bus Voltage	Calc Isc kA	Dev Isc kA	Isc Rating%
60 HP PUMP CONTROL PANEL	Failed	480	*6.00	5.00	*119.93
COLD GEN CP	Failed	480	*14.40	5.00	*288.06
COLD GEN DS	Failed	480	*15.42	10.00	*154.19
CPNL_DUP EJECTOR	Failed	480	*5.26	5.00	*105.11
MCC#4	Failed	480	*23.12	22.00	*105.08
PROCESS WATER PP CP	Failed	480	*8.91	5.00	*178.21
1 TON HOIST DS	Passed	480	4.48	10.00	44.79
1PH DISC	Passed	480	0.48	10.00	4.77
42" BYPASS TEMPORARY EQUIPM	Passed	480	1.91	10.00	19.09
AC-1 DS	Passed	480	2.38	10.00	23.83
BLDG 15-18 PANEL	Passed	208	1.35	10.00	13.54
BOILER #1 CP	Passed	480	2.26	5.00	45.12
BOILER #1 DS	Passed	480	2.44	10.00	24.41
BOILER #2 CP	Passed	480	2.76	5.00	55.13
BOILER #2 DS	Passed	480	3.04	10.00	30.36
BOILER FD PP1 DS	Passed	480	4.01	10.00	40.07
BOILER FD PP2 DS	Passed	480	4.01	10.00	40.07
BW PP#1 SUC VLV DS	Passed	208	0.85	10.00	8.47
BW PP#2 SUC VLV DS	Passed	208	0.62	10.00	6.22
BW VALVE 12 DS	Passed	208	1.19	10.00	11.89
BW VALVE 17 DS	Passed	208	0.58	10.00	5.80
BW VALVE 1A DS	Passed	208	1.14	10.00	11.45
BW VALVE 1B DS	Passed	208	0.86	10.00	8.61
BW VALVE 20 DS	Passed	208	0.75	10.00	7.48
BW VALVE 21 DS	Passed	208	0.82	10.00	8.19
BW VALVE 24 DS	Passed	208	1.19	10.00	11.89
BW VALVE 4A DS	Passed	208	0.91	10.00	9.06
BW VALVE 4B DS	Passed	208	0.72	10.00	7.17
BW VALVE 5 DS	Passed	208	0.58	10.00	5.80
BW VALVE 8 DS	Passed	208	0.75	10.00	7.48
BW VALVE 9 D	Passed	208	0.82	10.00	8.19
CAUS XFER PP1 DS	Passed	480	3.90	10.00	39.00
CAUS XFER PP2 DS	Passed	480	3.90	10.00	39.00
CHALLENGER L DS	Passed	480	1.41	10.00	14.07
CHALLENGER R DS	Passed	480	1.41	10.00	14.07
CHLD WTR PP1 DS	Passed	480	3.96	10.00	39.64
CHLD WTR PP2 DS	Passed	480	3.96	10.00	39.64
CHLOR BLDG DS	Passed	480	2.39	10.00	23.94
CND WTR PP1 DS	Passed	480	5.38	10.00	53.76
CND WTR PP2 DS	Passed	480	5.38	10.00	53.76

Bus	Status	Bus Voltage	Calc Isc kA	Dev Isc kA	Isc Rating%
CNTRL_COOLING TWR	Passed	480	3.96	5.00	79.28
CNTRL_DEHUMIDIFIER	Passed	480	1.70	5.00	34.02
COMPRESSOR #1 DS	Passed	480	8.98	10.00	89.77
COMPRESSOR #2 DS	Passed	480	8.56	10.00	85.59
COMPRESSOR CHL DS	Passed	480	1.41	10.00	14.07
COMPRESSOR CNTRL TX DS	Passed	480	8.18	10.00	81.75
COMPRESSOR DS	Passed	208	0.67	10.00	6.70
COOLING TWR DS	Passed	480	4.57	10.00	45.65
DEHUMIDIFIER DS	Passed	480	1.80	10.00	18.04
DIST PANEL EDPL	Passed	208	5.23 (*N1)	10.00	52.31
DOM WTR CHL PP DS	Passed	480	1.41	10.00	14.07
DOM WTR PP CP	Passed	480	4.66	5.00	93.24
DPL	Passed	208	5.39 (*N1)	10.00	53.92
DPWB	Passed	480	9.30	42.00	22.14
DS_BLWR	Passed	480	7.46	10.00	74.58
DS_COMP BLOWER E	Passed	480	6.86	10.00	68.62
DS_COMP BLOWER W	Passed	480	6.86	10.00	68.62
DS_DPL	Passed	208	5.14	200.00	2.57
DS_DUCT HEATER E	Passed	480	4.85	10.00	48.50
DS_DUCT HEATER W	Passed	480	4.85	10.00	48.50
DS_HT WTR HTR1	Passed	480	3.56	10.00	35.59
DS_HT WTR HTR2	Passed	480	3.38	10.00	33.84
DS_HV-1	Passed	480	5.08	10.00	50.80
DS_HV-4	Passed	480	3.16	10.00	31.60
DS_LAB STERILIZER	Passed	208	4.47	10.00	44.72
EF-10 DS	Passed	480	1.38	10.00	13.84
EF-11 (1) DS	Passed	480	5.29	10.00	52.89
EF-11 (2) DS	Passed	480	3.95	10.00	39.50
EF-11 (3) DS	Passed	480	5.30	10.00	53.00
EF-16 DS	Passed	480	4.11	10.00	41.13
EF-17 DS	Passed	480	5.08	10.00	50.80
EL-3 SUB PANEL	Passed	208	2.47	10.00	24.68
ELEC HOIST DS	Passed	480	1.41	10.00	14.07
EMCC	Passed	480	21.17	22.00	96.24
FCV-102 DS	Passed	208	0.99	10.00	9.86
FILTER 1-2 PANEL	Passed	208	0.22	10.00	2.21
GARAGE DOOR DS	Passed	208	1.27	10.00	12.65
GARAGE DS	Passed	480	1.38	10.00	13.76
GARAGE PANEL	Passed	208	1.69	10.00	16.88
GAS PUMP DS	Passed	208	0.67	10.00	6.70
GEN PANEL	Passed	208	1.12	10.00	11.19
GEN PANEL DS	Passed	208	1.73	200.00	0.86
GENERATOR	Passed	480		35.00	
HEATER DS	Passed	480	1.75	10.00	17.49

Bus	Status	Bus Voltage	Calc Isc kA	Dev Isc kA	Isc Rating%
HV-3 DS	Passed	480	1.12	10.00	11.17
HV-5 DS	Passed	480	1.21	10.00	12.08
HVCB	Passed	480	2.34	35.00	6.68
HVRH	Passed	480	1.52	35.00	4.33
LCS DS	Passed	208	1.22	10.00	12.18
LIGHTING PANEL EL1	Passed	208	3.10	10.00	31.00
LIGHTING PANEL EL2	Passed	208	3.86	10.00	38.58
LIGHTING PANEL EL2 SEC 2	Passed	208	3.77	10.00	37.68
LIGHTING PANEL EL3	Passed	208	2.50	10.00	24.97
LIGHTING PANEL EL4	Passed	208	4.18 (*N1)	10.00	41.82
LIGHTING PANEL EL4 SEC 2	Passed	208	4.03	10.00	40.25
LIGHTING PANEL EL5	Passed	208	1.82	10.00	18.15
LIGHTING PANEL L1	Passed	208	3.80 (*N1)	10.00	38.03
LIGHTING PANEL L2 SEC 1	Passed	208	3.88 (*N1)	10.00	38.81
LIGHTING PANEL L2 SEC 2	Passed	208	4.51 (*N1)	10.00	45.13
LIGHTING PANEL L3	Passed	208	2.26	10.00	22.58
LIGHTING PANEL L4	Passed	208	2.78	10.00	27.81
LIGHTING PANEL LCS	Passed	208	1.21	10.00	12.05
LIGHTING PANEL LM	Passed	208	0.48	10.00	4.79
LM DS	Passed	208	2.27	200.00	1.13
LOCAL DS_LAB STERILIZER	Passed	208	2.91	10.00	29.14
LUNCH ROOM PANEL	Passed	208	1.38	10.00	13.84
LVCB	Passed	208	1.46	10.00	14.62
LVRH	Passed	208	0.83	10.00	8.34
MAIN SWGR	Passed	480	24.68	65.00	37.97
MAIN SWGR_	Passed	480	24.64	65.00	37.91
MCC#1	Passed	480	12.49	22.00	56.78
MCC#2	Passed	480	12.55	22.00	57.03
MCC#3	Passed	480	20.65	22.00	93.86
MO-27 DS	Passed	208	0.31	10.00	3.06
MO-28 DS	Passed	208	0.39	10.00	3.87
MO-29 DS	Passed	208	0.51	10.00	5.10
MO-30 DS	Passed	208	0.49	10.00	4.91
MO-31 DS	Passed	208	0.74	10.00	7.38
MO-32 DS	Passed	208	0.89	10.00	8.89
MO-33 DS	Passed	208	0.44	10.00	4.44
MO-34 DS	Passed	208	0.55	10.00	5.49
MO-35 DS	Passed	208	0.70	10.00	6.98
MO-36 DS	Passed	208	0.34	10.00	3.42
MO-37 DS	Passed	208	0.74	10.00	7.38
MO-38 DS	Passed	208	0.89	10.00	8.89
PANEL 2	Passed	208	1.89 (*N1)	10.00	18.88
PANEL 3	Passed	208	1.55	10.00	15.51
PANEL DP-CA	Passed	208	3.12	10.00	31.22

Bus	Status	Bus Voltage	Calc Isc kA	Dev Isc kA	Isc Rating%
PANEL DPCA 2	Passed	208	3.12	10.00	31.22
PANEL EDPL DS	Passed	208	5.12	200.00	2.56
PANEL LCB	Passed	208	1.64	10.00	16.42
PANEL SCADA (UPS)	Passed	208	2.50	10.00	24.96
PANEL TEL/SEC (UPS)	Passed	208	2.50	10.00	24.96
PNL MID	Passed	208	0.70	10.00	6.96
POWER PANEL #5	Passed	480	17.05	25.00	68.18
POWER PANEL EPH	Passed	480	10.42	25.00	41.69
POWER PANEL EPL	Passed	480	6.05	18.00	33.58
SERV BLDG DS	Passed	480	1.76	10.00	17.58
SRV BLDG PNL 1	Passed	208	2.27	10.00	22.72
SRV BLDG PNL 2	Passed	208	1.85	10.00	18.46
SRV BLDG PNL 3	Passed	208	2.56	10.00	25.59
SRV BLDG PNL DS	Passed	208	2.59	10.00	25.94
SUMP PUMP DS	Passed	480	2.21	10.00	22.15
TANK RM AUX HT DS	Passed	480	1.41	10.00	14.07

Appendix E

Overcurrent Protective Device Evaluation

OVERCURRENT PROTECTIVE DEVICE EVALUATION

DEVICE	STATUS	DESCRIPTION	VOLTAGE(V) RATING	SCCR RATING
Device Name /Bus /Manufacturer			**Bus / Device / Rating %**	**Calculated / Device / Rating %**
CB_EMCC - CAUS XFER PP1	Failed	TEC Mag-Break	480	*26.20 (*N1)
EMCC		3A	480	10.00
GE		TEC	100.00	*261.99
CB_EMCC - CAUS XFER PP2	Failed	TEC Mag-Break	480	*26.20 (*N1)
EMCC		3A	480	10.00
GE		TEC	100.00	*261.99
CB_EMCC - HV-1	Failed	TEC Mag-Break	480	*26.20 (*N1)
EMCC		7A	480	10.00
GE		TEC	100.00	*261.99
CB_EMCC - HV-3	Failed	TEC Mag-Break	480	*26.20 (*N1)
EMCC		3A	480	10.00
GE		TEC	100.00	*261.99
CB_EMCC - HV-4	Failed	TEC Mag-Break	480	*26.20 (*N1)
EMCC		7A	480	10.00
GE		TEC	100.00	*261.99
CB_EMCC - HV-5	Failed	TEC Mag-Break	480	*26.20 (*N1)
EMCC		3A	480	10.00
GE		TEC	100.00	*261.99
CB_MCC#1 - EF-11(1)	Failed	TEC Mag-Break	480	*12.64 (*N1)
MCC#1		7A	480	10.00
GE		TEC	100.00	*126.39
CB_MCC#1 - EF-11(2)	Failed	TEC Mag-Break	480	*12.64 (*N1)
MCC#1		7A	480	10.00
GE		TEC	100.00	*126.39
CB_MCC#1 - SUMP PUMP	Failed	TEC Mag-Break	480	*12.64 (*N1)
MCC#1		3A	480	10.00
GE		TEC	100.00	*126.39
CB_MCC#2 - EF-11(3)	Failed	TEC Mag-Break	480	*12.71 (*N1)
MCC#2		7A	480	10.00
GE		TEC	100.00	*127.12
CB_MCC#4 - 60 HP PUMP	Failed	TFK	480	*23.18
MCC#4		70-225A	480	22.00
GE		TFK	100.00	*105.39
CB_MCC#4 - AC-1	Failed	TEC Mag-Break	480	*28.62 (*N1)
MCC#4		7A	480	10.00
GE		TEC	100.00	*286.23
CB_MCC#4 - CHLD WTR PP1	Failed	TEC Mag-Break	480	*28.62 (*N1)
MCC#4		15A	480	10.00
GE		TEC	100.00	*286.23

DEVICE	STATUS	DESCRIPTION	VOLTAGE(V) RATING	SCCR RATING
Device Name /Bus /Manufacturer			**Bus / Device / Rating %**	**Calculated / Device / Rating %**
CB_MCC#4 - CHLD WTR PP2	Failed	TEC Mag-Break	480	*28.62 (*N1)
MCC#4		15A	480	10.00
GE		TEC	100.00	*286.23
CB_MCC#4 - CND WTR PP1	Failed	TEC Mag-Break	480	*28.62 (*N1)
MCC#4		7A	480	10.00
GE		TEC	100.00	*286.23
CB_MCC#4 - CND WTR PP2	Failed	TEC Mag-Break	480	*28.62 (*N1)
MCC#4		7A	480	10.00
GE		TEC	100.00	*286.23
CB_MCC#4 - COLD GEN	Failed	TFJ	480	*23.18
MCC#4		70-225A	480	22.00
GE		TFJ	100.00	*105.39
CB_MCC#4 - DPL	Failed	TFJ	480	*23.18
MCC#4		70-225A	480	22.00
GE		TFJ	100.00	*105.39
CB_MCC#4 - EF-10	Failed	TEC Mag-Break	480	*28.62 (*N1)
MCC#4		7A	480	10.00
GE		TEC	100.00	*286.23
CB_DPL - LCS	Passed	BAB, 1-Pole	120	5.38 (*N1)
DPL		10-70A	240	10.00
CUTLER-HAMMER		BAB	50.00	53.79
CB_EDPL - DP-CA	Passed	BAB, 3-Pole	208	5.24 (*N1)
DIST PANEL EDPL		15-100A	240	10.00
CUTLER-HAMMER		BAB	86.67	52.44
CB_EDPL - DPCA 2	Passed	BAB, 3-Pole	208	5.24 (*N1)
DIST PANEL EDPL		15-100A	240	10.00
CUTLER-HAMMER		BAB	86.67	52.44
CB_EDPL - EL1	Passed	BAB, 3-Pole	208	5.24 (*N1)
DIST PANEL EDPL		15-100A	240	10.00
CUTLER-HAMMER		BAB	86.67	52.44
CB_EDPL - EL2	Passed	BAB, 3-Pole	208	5.24 (*N1)
DIST PANEL EDPL		15-100A	240	10.00
CUTLER-HAMMER		BAB	86.67	52.44
CB_EDPL - EL3	Passed	BAB, 3-Pole	208	5.24 (*N1)
DIST PANEL EDPL		15-100A	240	10.00
CUTLER-HAMMER		BAB	86.67	52.44
CB_EDPL - EL4	Passed	BAB, 3-Pole	208	5.24 (*N1)
DIST PANEL EDPL		15-100A	240	10.00
CUTLER-HAMMER		BAB	86.67	52.44
CB_EDPL - EL5	Passed	BAB, 3-Pole	208	5.24 (*N1)
DIST PANEL EDPL		15-100A	240	10.00
CUTLER-HAMMER		BAB	86.67	52.44

DEVICE	STATUS	DESCRIPTION	VOLTAGE(V) RATING	SCCR RATING
Device Name /Bus /Manufacturer			**Bus / Device / Rating %**	**Calculated / Device / Rating %**
CB_EDPL - MAIN	Passed	DK	208	4.63
DIST PANEL EDPL		250-400A	240	65.00
CUTLER-HAMMER		DK	86.67	7.12
CB_DPL - L1	Passed	EDB, 2-3 Poles	208	4.67
DPL		100-225A, UL	240	22.00
CUTLER-HAMMER		EDB	86.67	21.24
CB_DPL - L2	Passed	EDB, 2-3 Poles	208	4.67
DPL		100-225A, UL	240	22.00
CUTLER-HAMMER		EDB	86.67	21.24
CB_DPL - L3	Passed	BAB, 3-Pole	208	5.38 (*N1)
DPL		15-100A	240	10.00
CUTLER-HAMMER		BAB	86.67	53.79
CB_DPL - L4	Passed	BAB, 3-Pole	208	5.38 (*N1)
DPL		15-100A	240	10.00
CUTLER-HAMMER		BAB	86.67	53.79
CB_DPL - LAB AUTOCLAVE	Passed	BAB, 3-Pole	208	5.38 (*N1)
DPL		15-100A	240	10.00
CUTLER-HAMMER		BAB	86.67	53.79
CB_DPL - MAIN	Passed	DK	208	4.67
DPL		250-400A	240	65.00
CUTLER-HAMMER		DK	86.67	7.19
FU_DPL DS	Passed	FRS-R, 600V Class RK5	208	5.14
DS_DPL		1-600A	600	200.00
BUSSMANN		FRS-R	34.67	2.57
CB_GARAGE PNL - COMPRESSO	Passed	QP, 2 & 3-Pole	208	1.69
GARAGE PANEL		15-125A	240	10.00
SIEMENS		QP	86.67	16.89
CB_GARAGE PNL - DOOR DS	Passed	QP, 2 & 3-Pole	208	1.69
GARAGE PANEL		15-125A	240	10.00
SIEMENS		QP	86.67	16.89
CB_GARAGE PNL - GAS PUMP	Passed	QP, 2 & 3-Pole	208	1.69
GARAGE PANEL		15-125A	240	10.00
SIEMENS		QP	86.67	16.89
CB_GARAGE PNL - MAIN	Passed	QP, 2 & 3-Pole	208	1.69
GARAGE PANEL		15-125A	240	10.00
SIEMENS		QP	86.67	16.89
FU_GEN PANEL DS	Passed	FRN-R, 250V Class RK5	208	1.73
GEN PANEL DS		0.1-600A	250	200.00
BUSSMANN		FRN-R	83.20	0.86
CB_EL3 - BW (1A&1B)	Passed	THQB	208	2.50
LIGHTING PANEL EL3		15-100A	240	10.00
GE		THQB	86.67	25.02

DEVICE	STATUS	DESCRIPTION	VOLTAGE(V) RATING	SCCR RATING
Device Name /Bus /Manufacturer			**Bus / Device / Rating %**	**Calculated / Device / Rating %**
CB_EL3 - BW (4A&4B)	Passed	THQB	208	2.50
LIGHTING PANEL EL3		15-100A	240	10.00
GE		THQB	86.67	25.02
CB_EL3 - BW PP#1 SUC VLV	Passed	THQB	208	2.50
LIGHTING PANEL EL3		15-100A	240	10.00
GE		THQB	86.67	25.02
CB_EL3 - BW PP#2 SUC VLV	Passed	THQB	208	2.50
LIGHTING PANEL EL3		15-100A	240	10.00
GE		THQB	86.67	25.02
CB_EL3 - LIME PIT PANEL	Passed	THQB	208	2.50
LIGHTING PANEL EL3		15-100A	240	10.00
GE		THQB	86.67	25.02
CB_EL5 - BW (17&20)	Passed	THQB	208	1.82
LIGHTING PANEL EL5		15-100A	240	10.00
GE		THQB	86.67	18.18
CB_EL5 - BW (21&24)	Passed	THQB	208	1.82
LIGHTING PANEL EL5		15-100A	240	10.00
GE		THQB	86.67	18.18
CB_EL5 - BW (5&8)	Passed	THQB	208	1.82
LIGHTING PANEL EL5		15-100A	240	10.00
GE		THQB	86.67	18.18
CB_EL5 - BW (9&12)	Passed	THQB	208	1.82
LIGHTING PANEL EL5		15-100A	240	10.00
GE		THQB	86.67	18.18
CB_EL5 - MO-27&36	Passed	THQB	208	1.82
LIGHTING PANEL EL5		15-100A	240	10.00
GE		THQB	86.67	18.18
CB_EL5 - MO-28&29	Passed	THQB	208	1.82
LIGHTING PANEL EL5		15-100A	240	10.00
GE		THQB	86.67	18.18
CB_EL5 - MO-30&33	Passed	THQB	208	1.82
LIGHTING PANEL EL5		15-100A	240	10.00
GE		THQB	86.67	18.18
CB_EL5 - MO-31&32	Passed	THQB	208	1.82
LIGHTING PANEL EL5		15-100A	240	10.00
GE		THQB	86.67	18.18
CB_EL5 - MO-34&35	Passed	THQB	208	1.82
LIGHTING PANEL EL5		15-100A	240	10.00
GE		THQB	86.67	18.18
CB_EL5 - MO-37&38	Passed	THQB	208	1.82
LIGHTING PANEL EL5		15-100A	240	10.00
GE		THQB	86.67	18.18

DEVICE	STATUS	DESCRIPTION	VOLTAGE(V) RATING	SCCR RATING
Device Name /Bus /Manufacturer			**Bus / Device / Rating %**	**Calculated / Device / Rating %**
CB_L1 - LUNCH RM PNL	Passed	THQB	208	3.80
LIGHTING PANEL L1		15-100A	240	10.00
GE		THQB	86.67	37.96
CB_LCS - FCV-102	Passed	THQB	208	1.21
LIGHTING PANEL LCS		15-100A	240	10.00
GE		THQB	86.67	12.06
FU_DS_LM	Passed	FRN-R, 250V Class RK5	208	2.27
LM DS		0.1-600A	250	200.00
BUSSMANN		FRN-R	83.20	1.14
CB_LVRH - MAIN	Passed	HD	208	0.83
LVRH		15-150A	240	25.00
SQUARE D		HD	86.67	3.34
CB_LVRH - PNL MID	Passed	QO, 3-Pole	208	0.83
LVRH		15-100A	240	10.00
SQUARE D		QO	86.67	8.34
CB_PANEL 2 - MAIN	Passed	QP, 2 & 3-Pole	208	1.88 (*N1)
PANEL 2		15-125A	240	10.00
SIEMENS		QP	86.67	18.83
CB_PNL 2 - PNL 3	Passed	QP, 2 & 3-Pole	208	1.88 (*N1)
PANEL 2		15-125A	240	10.00
SIEMENS		QP	86.67	18.83
CB_DP-CA - MAIN	Passed	BR/BRH, 3-Pole	208	3.13
PANEL DP-CA		15-100A, Fixed T, Adj. M	240	10.00
CUTLER-HAMMER		BR	86.67	31.31
FU_PANEL EDPL DS	Passed	FRS-R, 600V Class RK5	208	5.13
PANEL EDPL DS		1-600A	600	200.00
BUSSMANN		FRS-R	34.67	2.57
FU_SRV BLDG DS	Passed	NOS (Obs.), 600V Class H	208	2.59
SRV BLDG PNL DS		70-600A	600	10.00
BUSSMANN		NOS	34.67	25.94
CB_DPWB - 42" BYPSS	Passed	BJ	480	9.31
DPWB		15-125A	480	65.00
SQUARE D		BJ	100.00	14.32
CB_DPWB - BUILDING 15-18	Passed	Powerpact H-Frame, 5.2A/E & 6.2A/E	480	9.31
DPWB		LSI, 100AS	480	65.00
SQUARE D		HJ	100.00	14.32
CB_DPWB - CONTROL BLDG	Passed	HJ	480	9.31
DPWB		15-150A	480	65.00
SQUARE D		HJ	100.00	14.32
CB_DPWB - FILTER 1-2	Passed	BJ	480	9.31
DPWB		15-125A	480	65.00
SQUARE D		BJ	100.00	14.32

DEVICE	STATUS	DESCRIPTION	VOLTAGE(V) RATING	SCCR RATING
Device Name /Bus /Manufacturer			**Bus / Device / Rating %**	**Calculated / Device / Rating %**
CB_DPWB - GARAGE	Passed	BJ	480	9.31
DPWB		15-125A	480	65.00
SQUARE D		BJ	100.00	14.32
CB_DPWB - MAIN	Passed	Powerpact L-Frame, 5.3A/E & 6.3A/E	480	9.31
DPWB		LSI, 400AS	480	65.00
SQUARE D		LJ	100.00	14.32
CB_DPWB - REG HOUSE	Passed	BJ	480	9.31
DPWB		15-125A	480	65.00
SQUARE D		BJ	100.00	14.32
CB_DPWB - SERVICE BLDG	Passed	HJ	480	9.31
DPWB		15-150A	480	65.00
SQUARE D		HJ	100.00	14.32
CB_DPWB - WTR SHD MNGMNT	Passed	BJ	480	9.31
DPWB		15-125A	480	65.00
SQUARE D		BJ	100.00	14.32
CB_EMCC - 1 TON HOIST	Passed	THED	480	22.02
EMCC		15-150A	480	25.00
GE		THED	100.00	88.09
CB_EMCC - AIR COMP JOHNSON	Passed	THED	480	22.02
EMCC		15-150A	480	25.00
GE		THED	100.00	88.09
CB_EMCC - CHLORINATION BLG	Passed	THED	480	22.02
EMCC		15-150A	480	25.00
GE		THED	100.00	88.09
CB_EMCC - DUP EJECTOR	Passed	THED	480	22.02
EMCC		15-150A	480	25.00
GE		THED	100.00	88.09
CB_EMCC - EDPL	Passed	THED	480	22.02
EMCC		15-150A	480	25.00
GE		THED	100.00	88.09
CB_EMCC - EF 15&16	Passed	THED	480	22.02
EMCC		15-150A	480	25.00
GE		THED	100.00	88.09
CB_EMCC - EPH	Passed	THED	480	22.02
EMCC		15-150A	480	25.00
GE		THED	100.00	88.09
CB_EMCC - GEN PANEL	Passed	THED	480	22.02
EMCC		15-150A	480	25.00
GE		THED	100.00	88.09
CB_GENERATOR	Passed	Powerpact P-Frame, 3.0 & 3.0A	480	
GENERATOR		LI, 250-1200A, UL	480	35.00
SQUARE D		PG	100.00	35.00

DEVICE	STATUS	DESCRIPTION	VOLTAGE(V) RATING	SCCR RATING
Device Name /Bus /Manufacturer			**Bus / Device / Rating %**	**Calculated / Device / Rating %**
CB_HVCB - LVCB	Passed	BG	480	2.34
HVCB		15-125A	480	35.00
SQUARE D		BG	100.00	6.69
CB_HVCB - MAIN	Passed	PowerPact J-Frame, 3.2	480	2.34
HVCB		LI, 250AS	480	35.00
SQUARE D		JG	100.00	6.69
CB_HVRH - LVRH	Passed	EG	480	1.52
HVRH		15-125A	480	35.00
SQUARE D		EG	100.00	4.33
CB_HVRH - MAIN	Passed	HG	480	1.52
HVRH		15-150A	480	35.00
SQUARE D		HG	100.00	4.33
CB_MSWGR - DPWB	Passed	Magnum DS, DT 520	480	24.76
MAIN SWGR		LSI, 800AF, 200-800AP	508	65.00
CUTLER-HAMMER		MDN-608	94.49	38.09
CB_MSWGR - MCC#4	Passed	Magnum DS, DT 520	480	24.76
MAIN SWGR		LSI, 800AF, 200-800AP	508	65.00
CUTLER-HAMMER		MDN-608	94.49	38.09
CB_MSWGR - PP-5	Passed	Magnum DS, DT 520	480	24.76
MAIN SWGR		LSI, 800AF, 200-800AP	508	65.00
CUTLER-HAMMER		MDN-608	94.49	38.09
CB_MSWGR - BLOWER V-BELT	Passed	Magnum DS, DT 520	480	24.72
MAIN SWGR_		LSI, 800AF, 200-800AP	508	65.00
CUTLER-HAMMER		MDN-608	94.49	38.03
CB_MSWGR - EMCC	Passed	Magnum DS, DT 520	480	24.72
MAIN SWGR_		LSI, 800AF, 200-800AP	508	65.00
CUTLER-HAMMER		MDN-608	94.49	38.03
CB_MSWGR - MCC#1	Passed	Magnum DS, DT 520	480	24.72
MAIN SWGR_		LSI, 800AF, 200-800AP	508	65.00
CUTLER-HAMMER		MDN-608	94.49	38.03
CB_MSWGR - MCC#2	Passed	Magnum DS, DT 520	480	24.72
MAIN SWGR_		LSI, 800AF, 200-800AP	508	65.00
CUTLER-HAMMER		MDN-608	94.49	38.03
CB_MSWGR - MCC#3	Passed	Magnum DS, DT 520	480	24.72
MAIN SWGR_		LSI, 800AF, 200-800AP	508	65.00
CUTLER-HAMMER		MDN-608	94.49	38.03
CB_MSWGR - TIE	Passed	Magnum DS, DT 1150/1150i	480	24.72
MAIN SWGR_		LSI, 800-6000AF	508	65.00
CUTLER-HAMMER		MDN-616	94.49	38.03
CB_MCC#1 - MAIN	Passed	TJK	480	12.51
MCC#1		125-600A	480	30.00
GE		TJK	100.00	41.70

DEVICE	STATUS	DESCRIPTION	VOLTAGE(V) RATING	SCCR RATING
Device Name /Bus /Manufacturer			**Bus / Device / Rating %**	**Calculated / Device / Rating %**
CB_MCC#2 - MAIN	Passed	TJK	480	12.57
MCC#2		125-600A	480	30.00
GE		TJK	100.00	41.89
CB_MCC#3 - DOM WTR PP	Passed	THED	480	20.70
MCC#3		15-150A	480	25.00
GE		THED	100.00	82.80
CB_MCC#3 - MAIN	Passed	TJK	480	20.70
MCC#3		125-600A	480	30.00
GE		TJK	100.00	69.00
CB_MCC#3 - PROCSS WTR PP	Passed	THED	480	20.70
MCC#3		15-150A	480	25.00
GE		THED	100.00	82.80
CB_MCC#3 - WTR WSH PP1	Passed	TJK	480	20.70
MCC#3		125-600A	480	30.00
GE		TJK	100.00	69.00
CB_MCC#3 - WTR WSH PP2	Passed	TJK	480	20.70
MCC#3		125-600A	480	30.00
GE		TJK	100.00	69.00
CB_MCC#4 - COOLING TWR	Passed	THED	480	23.18
MCC#4		15-150A	480	25.00
GE		THED	100.00	92.74
CB_MCC#4 - DEHUMID	Passed	THED	480	23.18
MCC#4		15-150A	480	25.00
GE		THED	100.00	92.74
CB_MCC#4 - HT WTR HTR	Passed	THED	480	23.18
MCC#4		15-150A	480	25.00
GE		THED	100.00	92.74
CB_PP-5 - COMP BLWR E	Passed	FD	480	17.08
POWER PANEL #5		15-225A	480	25.00
CUTLER-HAMMER		FD	100.00	68.33
CB_PP-5 - COMP BLWR W	Passed	FD	480	17.08
POWER PANEL #5		15-225A	480	25.00
CUTLER-HAMMER		FD	100.00	68.33
CB_PP-5 - DUCT HTR E	Passed	FD	480	17.08
POWER PANEL #5		15-225A	480	25.00
CUTLER-HAMMER		FD	100.00	68.33
CB_PP-5 - DUCT HTR W	Passed	FD	480	17.08
POWER PANEL #5		15-225A	480	25.00
CUTLER-HAMMER		FD	100.00	68.33
CB_EPH - BOILER #1	Passed	THED	480	10.64
POWER PANEL EPH		15-150A	480	25.00
GE		THED	100.00	42.57

DEVICE	STATUS	DESCRIPTION	VOLTAGE(V) RATING	SCCR RATING
Device Name /Bus /Manufacturer			**Bus / Device / Rating %**	**Calculated / Device / Rating %**
CB_EPH - BOILER #2	Passed	THED	480	10.64
POWER PANEL EPH		15-150A	480	25.00
GE		THED	100.00	42.57
CB_EPH - BOILER FD PP1	Passed	THED	480	10.64
POWER PANEL EPH		15-150A	480	25.00
GE		THED	100.00	42.57
CB_EPH - BOILER FD PP2	Passed	THED	480	10.64
POWER PANEL EPH		15-150A	480	25.00
GE		THED	100.00	42.57
CB_EPH - WATER HEATER	Passed	THED	480	10.64
POWER PANEL EPH		15-150A	480	25.00
GE		THED	100.00	42.57
FU_SERV BLDG DS	Passed	NOS (Obs.), 600V Class H	480	1.76
SERV BLDG DS		70-600A	600	10.00
BUSSMANN		NOS	80.00	17.58
FU_TX LCB DS	Passed	FRS-R, 600V Class RK5	480	1.41
TX LCB DS		1-600A	600	200.00
BUSSMANN		FRS-R	80.00	0.71
CB_V-BEST BLWR ST	Passed	TJK	480	12.49
V-BELT BLWR ST		125-600A	480	30.00
GE		TJK	100.00	41.63
CB_MSWGR - MAIN	Passed (*N3)	Magnum DS, DT 1150/1150i	480	24.76
MAIN SWGR		LSI, 800-6000AF	508	65.00
CUTLER-HAMMER		MDN-616	94.49	38.09

(*N1) System X/R higher than Test X/R, Calc INT kA modified based on low voltage factor.

(*N3) Calc Arc Flash Line/Load Side Evaluation result is Dangerous!

(*Calc INT kA) Device did not pass. Device is either Marginal (100%) or Failed (100%) of device library interrupting rating.

Appendix F

Arc Flash Warning Labels

DANGER

NO SAFE PPE EXISTS

ENERGIZED WORK PROHIBITED

223 in	Arc Flash Boundary
74.5 cal/cm^2	Incident Energy at 18 in
PPE	Refer to NFPA 70E Table 130.5(G)
Bolted Fault	24.76 kA
480 VAC	Nominal System Voltage
42 in	Limited Approach
12 in	Restricted Approach
Jun 25, 2019	Date of Study

Location: MAIN SWGR

DANGER

INSUFFICIENT SHORT CIRCUIT RATING

ENERGIZED WORK PROHIBITED

THE AVAILABLE SHORT CIRCUIT CURRENT EXCEEDS THE INTERRUPTING RATING OF THE PROTECTIVE DEVICES AND/OR THE WITHSTAND RATING OF THE EQUIPMENT

Jun 26, 2019	Date of Study

Location: 60 HP PUMP CONTROL PANEL

DANGER

INSUFFICIENT SHORT CIRCUIT RATING

ENERGIZED WORK PROHIBITED

THE AVAILABLE SHORT CIRCUIT CURRENT EXCEEDS THE INTERRUPTING RATING OF THE PROTECTIVE DEVICES AND/OR THE WITHSTAND RATING OF THE EQUIPMENT

Jun 26, 2019	Date of Study

Location: CPNL_DUP EJECTOR

DANGER

INSUFFICIENT SHORT CIRCUIT RATING

ENERGIZED WORK PROHIBITED

THE AVAILABLE SHORT CIRCUIT CURRENT EXCEEDS THE INTERRUPTING RATING OF THE PROTECTIVE DEVICES AND/OR THE WITHSTAND RATING OF THE EQUIPMENT

Jun 26, 2019	Date of Study

Location: COLD GEN CP

DANGER

INSUFFICIENT SHORT CIRCUIT RATING

ENERGIZED WORK PROHIBITED

THE AVAILABLE SHORT CIRCUIT CURRENT EXCEEDS THE INTERRUPTING RATING OF THE PROTECTIVE DEVICES AND/OR THE WITHSTAND RATING OF THE EQUIPMENT

Jun 26, 2019	Date of Study

Location: EMCC

DANGER

INSUFFICIENT SHORT CIRCUIT RATING

ENERGIZED WORK PROHIBITED

THE AVAILABLE SHORT CIRCUIT CURRENT EXCEEDS THE INTERRUPTING RATING OF THE PROTECTIVE DEVICES AND/OR THE WITHSTAND RATING OF THE EQUIPMENT

Jun 26, 2019	Date of Study

Location: COLD GEN DS

DANGER

INSUFFICIENT SHORT CIRCUIT RATING

ENERGIZED WORK PROHIBITED

THE AVAILABLE SHORT CIRCUIT CURRENT EXCEEDS THE INTERRUPTING RATING OF THE PROTECTIVE DEVICES AND/OR THE WITHSTAND RATING OF THE EQUIPMENT

Jun 26, 2019	Date of Study

Location: MCC#1

DANGER

INSUFFICIENT SHORT CIRCUIT RATING

ENERGIZED WORK PROHIBITED

THE AVAILABLE SHORT CIRCUIT CURRENT EXCEEDS THE INTERRUPTING RATING OF THE PROTECTIVE DEVICES AND/OR THE WITHSTAND RATING OF THE EQUIPMENT

Jun 26, 2019	Date of Study

Location: MCC#2

DANGER

INSUFFICIENT SHORT CIRCUIT RATING

ENERGIZED WORK PROHIBITED

THE AVAILABLE SHORT CIRCUIT CURRENT EXCEEDS THE INTERRUPTING RATING OF THE PROTECTIVE DEVICES AND/OR THE WITHSTAND RATING OF THE EQUIPMENT

Jun 26, 2019	Date of Study

Location: PROCESS WATER PP CP

DANGER

INSUFFICIENT SHORT CIRCUIT RATING

ENERGIZED WORK PROHIBITED

THE AVAILABLE SHORT CIRCUIT CURRENT EXCEEDS THE INTERRUPTING RATING OF THE PROTECTIVE DEVICES AND/OR THE WITHSTAND RATING OF THE EQUIPMENT

Jun 26, 2019	Date of Study

Location: MCC#3

DANGER

INSUFFICIENT SHORT CIRCUIT RATING

ENERGIZED WORK PROHIBITED

THE AVAILABLE SHORT CIRCUIT CURRENT EXCEEDS THE INTERRUPTING RATING OF THE PROTECTIVE DEVICES AND/OR THE WITHSTAND RATING OF THE EQUIPMENT

Jun 26, 2019	Date of Study

Location: MCC#4

WARNING

Arc Flash and Shock Risk

Appropriate PPE Required

97 in	Arc Flash Boundary
18.8 cal/cm^2	Incident Energy at 18 in
PPE	Refer to NFPA 70E Table 130.5(G)
Bolted Fault	13.86 kA
480 VAC	Nominal System Voltage
42 in	Limited Approach
12 in	Restricted Approach
Jun 25, 2019	Date of Study

Location: GENERATOR

WARNING

Arc Flash and Shock Risk

Appropriate PPE Required

83 in	Arc Flash Boundary
14.7 cal/cm^2	Incident Energy at 18 in
PPE	Refer to NFPA 70E Table 130.5(G)
Bolted Fault	4.63 kA
208 VAC	Nominal System Voltage
42 in	Limited Approach
12 in	Restricted Approach
Jun 25, 2019	Date of Study

Location: DIST PANEL EDPL

WARNING

Arc Flash and Shock Risk

Appropriate PPE Required

86 in	Arc Flash Boundary
15.6 cal/cm^2	Incident Energy at 18 in
PPE	Refer to NFPA 70E Table 130.5(G)
Bolted Fault	4.98 kA
208 VAC	Nominal System Voltage
42 in	Limited Approach
12 in	Restricted Approach
Jun 25, 2019	Date of Study

Location: DS_DPL

WARNING

Arc Flash and Shock Risk

Appropriate PPE Required

80 in	Arc Flash Boundary
13.9 cal/cm^2	Incident Energy at 18 in
PPE	Refer to NFPA 70E Table 130.5(G)
Bolted Fault	4.48 kA
208 VAC	Nominal System Voltage
42 in	Limited Approach
12 in	Restricted Approach
Jun 25, 2019	Date of Study

Location: DPL

WARNING

Arc Flash and Shock Risk

Appropriate PPE Required

86 in	Arc Flash Boundary
15.5 cal/cm^2	Incident Energy at 18 in
PPE	Refer to NFPA 70E Table 130.5(G)
Bolted Fault	4.95 kA
208 VAC	Nominal System Voltage
42 in	Limited Approach
12 in	Restricted Approach
Jun 25, 2019	Date of Study

Location: PANEL EDPL DS

WARNING

Arc Flash and Shock Risk

Appropriate PPE Required

79 in	Arc Flash Boundary
13.7 cal/cm^2	Incident Energy at 18 in
PPE	Refer to NFPA 70E Table 130.5(G)
Bolted Fault	4.18 kA
208 VAC	Nominal System Voltage
42 in	Limited Approach
12 in	Restricted Approach
Jun 25, 2019	Date of Study

Location: LIGHTING PANEL L2 SEC 2

WARNING

Arc Flash and Shock Risk

Appropriate PPE Required

76 in	Arc Flash Boundary
12.6 cal/cm^2	Incident Energy at 18 in
PPE	Refer to NFPA 70E Table 130.5(G)
Bolted Fault	3.76 kA
208 VAC	Nominal System Voltage
42 in	Limited Approach
12 in	Restricted Approach
Jun 25, 2019	Date of Study

Location: LIGHTING PANEL L2 SEC 1

WARNING

Arc Flash and Shock Risk

Appropriate PPE Required

59 in	Arc Flash Boundary
8.35 cal/cm^2	Incident Energy at 18 in
PPE	Refer to NFPA 70E Table 130.5(G)
Bolted Fault	1.76 kA
480 VAC	Nominal System Voltage
42 in	Limited Approach
12 in	Restricted Approach
Jun 25, 2019	Date of Study

Location: SERV BLDG DS

WARNING

Arc Flash and Shock Risk

Appropriate PPE Required

70 in	Arc Flash Boundary
11.1 cal/cm^2	Incident Energy at 18 in
PPE	Refer to NFPA 70E Table 130.5(G)
Bolted Fault	2.40 kA
480 VAC	Nominal System Voltage
42 in	Limited Approach
12 in	Restricted Approach
Jun 25, 2019	Date of Study

Location: CHLOR BLDG DS

WARNING

Arc Flash and Shock Risk

Appropriate PPE Required

59 in	Arc Flash Boundary
8.31 cal/cm^2	Incident Energy at 18 in
PPE	Refer to NFPA 70E Table 130.5(G)
Bolted Fault	1.75 kA
480 VAC	Nominal System Voltage
42 in	Limited Approach
12 in	Restricted Approach
Jun 25, 2019	Date of Study

Location: HEATER DS

WARNING

Arc Flash and Shock Risk

Appropriate PPE Required

62 in	Arc Flash Boundary
9.01 cal/cm^2	Incident Energy at 18 in
PPE	Refer to NFPA 70E Table 130.5(G)
Bolted Fault	2.34 kA
480 VAC	Nominal System Voltage
42 in	Limited Approach
12 in	Restricted Approach
Jun 25, 2019	Date of Study

Location: HVCB

WARNING

Arc Flash and Shock Risk

Appropriate PPE Required

56 in	Arc Flash Boundary
7.59 cal/cm^2	Incident Energy at 18 in
PPE	Refer to NFPA 70E Table 130.5(G)
Bolted Fault	2.14 kA
208 VAC	Nominal System Voltage
42 in	Limited Approach
12 in	Restricted Approach
Jun 25, 2019	Date of Study

Location: SRV BLDG PNL DS

WARNING

Arc Flash and Shock Risk

Appropriate PPE Required

54 in	Arc Flash Boundary
7.31 cal/cm^2	Incident Energy at 18 in
PPE	Refer to NFPA 70E Table 130.5(G)
Bolted Fault	1.81 kA
208 VAC	Nominal System Voltage
42 in	Limited Approach
12 in	Restricted Approach
Jun 25, 2019	Date of Study

Location: PANEL 2

WARNING

Arc Flash and Shock Risk

Appropriate PPE Required

52 in	Arc Flash Boundary
6.83 cal/cm^2	Incident Energy at 18 in
PPE	Refer to NFPA 70E Table 130.5(G)
Bolted Fault	1.41 kA
480 VAC	Nominal System Voltage
42 in	Limited Approach
12 in	Restricted Approach
Jun 25, 2019	Date of Study

Location: CHALLENGER R DS

WARNING

Arc Flash and Shock Risk

Appropriate PPE Required

53 in	Arc Flash Boundary
7.01 cal/cm^2	Incident Energy at 18 in
PPE	Refer to NFPA 70E Table 130.5(G)
Bolted Fault	1.71 kA
208 VAC	Nominal System Voltage
42 in	Limited Approach
12 in	Restricted Approach
Jun 25, 2019	Date of Study

Location: GEN PANEL DS

WARNING

Arc Flash and Shock Risk

Appropriate PPE Required

52 in	Arc Flash Boundary
6.83 cal/cm^2	Incident Energy at 18 in
PPE	Refer to NFPA 70E Table 130.5(G)
Bolted Fault	1.41 kA
480 VAC	Nominal System Voltage
42 in	Limited Approach
12 in	Restricted Approach
Jun 25, 2019	Date of Study

Location: COMPRESSOR CHL DS

WARNING

Arc Flash and Shock Risk

Appropriate PPE Required

52 in	Arc Flash Boundary
6.83 cal/cm^2	Incident Energy at 18 in
PPE	Refer to NFPA 70E Table 130.5(G)
Bolted Fault	1.41 kA
480 VAC	Nominal System Voltage
42 in	Limited Approach
12 in	Restricted Approach
Jun 25, 2019	Date of Study

Location: CHALLENGER L DS

WARNING

Arc Flash and Shock Risk

Appropriate PPE Required

52 in	Arc Flash Boundary
6.83 cal/cm^2	Incident Energy at 18 in
PPE	Refer to NFPA 70E Table 130.5(G)
Bolted Fault	1.41 kA
480 VAC	Nominal System Voltage
42 in	Limited Approach
12 in	Restricted Approach
Jun 25, 2019	Date of Study

Location: DOM WTR CHL PP DS

WARNING

Arc Flash and Shock Risk

Appropriate PPE Required

52 in	Arc Flash Boundary
6.83 cal/cm^2	Incident Energy at 18 in
PPE	Refer to NFPA 70E Table 130.5(G)
Bolted Fault	1.41 kA
480 VAC	Nominal System Voltage
42 in	Limited Approach
12 in	Restricted Approach
Jun 25, 2019	Date of Study

Location: ELEC HOIST DS

WARNING

Arc Flash and Shock Risk

Appropriate PPE Required

52 in	Arc Flash Boundary
6.83 cal/cm^2	Incident Energy at 18 in
PPE	Refer to NFPA 70E Table 130.5(G)
Bolted Fault	1.41 kA
480 VAC	Nominal System Voltage
42 in	Limited Approach
12 in	Restricted Approach
Jun 25, 2019	Date of Study

Location: UNIT HEATER DS

WARNING

Arc Flash and Shock Risk

Appropriate PPE Required

52 in	Arc Flash Boundary
6.83 cal/cm^2	Incident Energy at 18 in
PPE	Refer to NFPA 70E Table 130.5(G)
Bolted Fault	1.41 kA
480 VAC	Nominal System Voltage
42 in	Limited Approach
12 in	Restricted Approach
Jun 25, 2019	Date of Study

Location: TANK RM AUX HT DS

WARNING

Arc Flash and Shock Risk

Appropriate PPE Required

52 in	Arc Flash Boundary
6.83 cal/cm^2	Incident Energy at 18 in
PPE	Refer to NFPA 70E Table 130.5(G)
Bolted Fault	1.41 kA
480 VAC	Nominal System Voltage
42 in	Limited Approach
12 in	Restricted Approach
Jun 25, 2019	Date of Study

Location: VANTON PP DS

WARNING

Arc Flash and Shock Risk

Appropriate PPE Required

52 in	Arc Flash Boundary
6.83 cal/cm^2	Incident Energy at 18 in
PPE	Refer to NFPA 70E Table 130.5(G)
Bolted Fault	1.41 kA
480 VAC	Nominal System Voltage
42 in	Limited Approach
12 in	Restricted Approach
Jun 25, 2019	Date of Study

Location: TX LCB DS

WARNING

Arc Flash and Shock Risk

Appropriate PPE Required

50 in	Arc Flash Boundary
6.33 cal/cm^2	Incident Energy at 18 in
PPE	Refer to NFPA 70E Table 130.5(G)
Bolted Fault	1.49 kA
208 VAC	Nominal System Voltage
42 in	Limited Approach
12 in	Restricted Approach
Jun 25, 2019	Date of Study

Location: GARAGE PANEL

WARNING

Arc Flash and Shock Risk

Appropriate PPE Required

49 in	Arc Flash Boundary
6.22 cal/cm^2	Incident Energy at 18 in
PPE	Refer to NFPA 70E Table 130.5(G)
Bolted Fault	1.46 kA
208 VAC	Nominal System Voltage
42 in	Limited Approach
12 in	Restricted Approach
Jun 25, 2019	Date of Study

Location: PANEL LCB

WARNING

Arc Flash and Shock Risk

Appropriate PPE Required

32 in	Arc Flash Boundary
3.02 cal/cm^2	Incident Energy at 18 in
PPE	Refer to NFPA 70E Table 130.5(G)
Bolted Fault	23.18 kA
480 VAC	Nominal System Voltage
42 in	Limited Approach
12 in	Restricted Approach
Jun 25, 2019	Date of Study

Location: MCC#4

WARNING

Arc Flash and Shock Risk

Appropriate PPE Required

48 in	Arc Flash Boundary
5.96 cal/cm^2	Incident Energy at 18 in
PPE	Refer to NFPA 70E Table 130.5(G)
Bolted Fault	1.38 kA
208 VAC	Nominal System Voltage
42 in	Limited Approach
12 in	Restricted Approach
Jun 25, 2019	Date of Study

Location: LVCB

WARNING

Arc Flash and Shock Risk

Appropriate PPE Required

31 in	Arc Flash Boundary
2.89 cal/cm^2	Incident Energy at 18 in
PPE	Refer to NFPA 70E Table 130.5(G)
Bolted Fault	20.70 kA
480 VAC	Nominal System Voltage
42 in	Limited Approach
12 in	Restricted Approach
Jun 25, 2019	Date of Study

Location: MCC#3

WARNING

Arc Flash and Shock Risk

Appropriate PPE Required

45 in	Arc Flash Boundary
5.34 cal/cm^2	Incident Energy at 18 in
PPE	Refer to NFPA 70E Table 130.5(G)
Bolted Fault	1.19 kA
208 VAC	Nominal System Voltage
42 in	Limited Approach
12 in	Restricted Approach
Jun 25, 2019	Date of Study

Location: BLDG 15-18 PANEL

WARNING

Arc Flash and Shock Risk

Appropriate PPE Required

31 in	Arc Flash Boundary
2.88 cal/cm^2	Incident Energy at 18 in
PPE	Refer to NFPA 70E Table 130.5(G)
Bolted Fault	22.02 kA
480 VAC	Nominal System Voltage
42 in	Limited Approach
12 in	Restricted Approach
Jun 25, 2019	Date of Study

Location: EMCC

WARNING

Arc Flash and Shock Risk

Appropriate PPE Required

27 in	Arc Flash Boundary
2.28 cal/cm^2	Incident Energy at 18 in
PPE	Refer to NFPA 70E Table 130.5(G)
Bolted Fault	17.08 kA
480 VAC	Nominal System Voltage
42 in	Limited Approach
12 in	Restricted Approach
Jun 25, 2019	Date of Study

Location: POWER PANEL #5

WARNING

Arc Flash and Shock Risk

Appropriate PPE Required

23 in	Arc Flash Boundary
1.83 cal/cm^2	Incident Energy at 18 in
PPE	Refer to NFPA 70E Table 130.5(G)
Bolted Fault	2.13 kA
208 VAC	Nominal System Voltage
42 in	Limited Approach
12 in	Restricted Approach
Jun 25, 2019	Date of Study

Location: SRV BLDG PNL 3

WARNING

Arc Flash and Shock Risk

Appropriate PPE Required

25 in	Arc Flash Boundary
2.00 cal/cm^2	Incident Energy at 18 in
PPE	Refer to NFPA 70E Table 130.5(G)
Bolted Fault	1.78 kA
208 VAC	Nominal System Voltage
42 in	Limited Approach
12 in	Restricted Approach
Jun 25, 2019	Date of Study

Location: SRV BLDG PNL 2

WARNING

Arc Flash and Shock Risk

Appropriate PPE Required

22 in	Arc Flash Boundary
1.71 cal/cm^2	Incident Energy at 18 in
PPE	Refer to NFPA 70E Table 130.5(G)
Bolted Fault	12.57 kA
480 VAC	Nominal System Voltage
42 in	Limited Approach
12 in	Restricted Approach
Jun 25, 2019	Date of Study

Location: MCC#2

WARNING

Arc Flash and Shock Risk

Appropriate PPE Required

24 in	Arc Flash Boundary
1.89 cal/cm^2	Incident Energy at 18 in
PPE	Refer to NFPA 70E Table 130.5(G)
Bolted Fault	2.00 kA
208 VAC	Nominal System Voltage
42 in	Limited Approach
12 in	Restricted Approach
Jun 25, 2019	Date of Study

Location: SRV BLDG PNL 1

WARNING

Arc Flash and Shock Risk

Appropriate PPE Required

22 in	Arc Flash Boundary
1.71 cal/cm^2	Incident Energy at 18 in
PPE	Refer to NFPA 70E Table 130.5(G)
Bolted Fault	12.51 kA
480 VAC	Nominal System Voltage
42 in	Limited Approach
12 in	Restricted Approach
Jun 25, 2019	Date of Study

Location: MCC#1

WARNING

Arc Flash and Shock Risk

Appropriate PPE Required

22 in	Arc Flash Boundary
1.70 cal/cm^2	Incident Energy at 18 in
PPE	Refer to NFPA 70E Table 130.5(G)
Bolted Fault	12.49 kA
480 VAC	Nominal System Voltage
42 in	Limited Approach
12 in	Restricted Approach
Jun 25, 2019	Date of Study

Location: V-BELT BLWR ST

WARNING

Arc Flash and Shock Risk

Appropriate PPE Required

20 in	Arc Flash Boundary
1.41 cal/cm^2	Incident Energy at 18 in
PPE	Refer to NFPA 70E Table 130.5(G)
Bolted Fault	0.79 kA
208 VAC	Nominal System Voltage
42 in	Limited Approach
12 in	Restricted Approach
Jun 25, 2019	Date of Study

Location: LVRH

WARNING

Arc Flash and Shock Risk

Appropriate PPE Required

22 in	Arc Flash Boundary
1.62 cal/cm^2	Incident Energy at 18 in
PPE	Refer to NFPA 70E Table 130.5(G)
Bolted Fault	1.11 kA
208 VAC	Nominal System Voltage
42 in	Limited Approach
12 in	Restricted Approach
Jun 25, 2019	Date of Study

Location: GEN PANEL

WARNING

Arc Flash and Shock Risk

Appropriate PPE Required

19 in	Arc Flash Boundary
1.30 cal/cm^2	Incident Energy at 18 in
PPE	Refer to NFPA 70E Table 130.5(G)
Bolted Fault	9.31 kA
480 VAC	Nominal System Voltage
42 in	Limited Approach
12 in	Restricted Approach
Jun 25, 2019	Date of Study

Location: DPWB

WARNING

Arc Flash and Shock Risk

Appropriate PPE Required

20 in	Arc Flash Boundary
1.48 cal/cm^2	Incident Energy at 18 in
PPE	Refer to NFPA 70E Table 130.5(G)
Bolted Fault	1.37 kA
208 VAC	Nominal System Voltage
42 in	Limited Approach
12 in	Restricted Approach
Jun 25, 2019	Date of Study

Location: LUNCH ROOM PANEL

WARNING

Arc Flash and Shock Risk

Appropriate PPE Required

17 in	Arc Flash Boundary
1.12 cal/cm^2	Incident Energy at 18 in
PPE	Refer to NFPA 70E Table 130.5(G)
Bolted Fault	0.48 kA
480 VAC	Nominal System Voltage
42 in	Limited Approach
12 in	Restricted Approach
Jun 25, 2019	Date of Study

Location: 1PH DISC

WARNING

Arc Flash and Shock Risk

Appropriate PPE Required

13 in	Arc Flash Boundary
0.71 cal/cm^2	Incident Energy at 18 in
PPE	Refer to NFPA 70E Table 130.5(G)
Bolted Fault	15.45 kA
480 VAC	Nominal System Voltage
42 in	Limited Approach
12 in	Restricted Approach
Jun 25, 2019	Date of Study

Location: COLD GEN DS

WARNING

Arc Flash and Shock Risk

Appropriate PPE Required

9 in	Arc Flash Boundary
0.41 cal/cm^2	Incident Energy at 18 in
PPE	Refer to NFPA 70E Table 130.5(G)
Bolted Fault	10.64 kA
480 VAC	Nominal System Voltage
42 in	Limited Approach
12 in	Restricted Approach
Jun 25, 2019	Date of Study

Location: POWER PANEL EPH

WARNING

Arc Flash and Shock Risk

Appropriate PPE Required

13 in	Arc Flash Boundary
0.66 cal/cm^2	Incident Energy at 18 in
PPE	Refer to NFPA 70E Table 130.5(G)
Bolted Fault	14.43 kA
480 VAC	Nominal System Voltage
42 in	Limited Approach
12 in	Restricted Approach
Jun 25, 2019	Date of Study

Location: COLD GEN CP

WARNING

Arc Flash and Shock Risk

Appropriate PPE Required

9 in	Arc Flash Boundary
0.40 cal/cm^2	Incident Energy at 18 in
PPE	Refer to NFPA 70E Table 130.5(G)
Bolted Fault	7.46 kA
480 VAC	Nominal System Voltage
42 in	Limited Approach
12 in	Restricted Approach
Jun 25, 2019	Date of Study

Location: DS_BLWR

WARNING

Arc Flash and Shock Risk

Appropriate PPE Required

10 in	Arc Flash Boundary
0.43 cal/cm^2	Incident Energy at 18 in
PPE	Refer to NFPA 70E Table 130.5(G)
Bolted Fault	3.12 kA
480 VAC	Nominal System Voltage
42 in	Limited Approach
12 in	Restricted Approach
Jun 25, 2019	Date of Study

Location: DS_HT WTR HTR2

WARNING

Arc Flash and Shock Risk

Appropriate PPE Required

9 in	Arc Flash Boundary
0.36 cal/cm^2	Incident Energy at 18 in
PPE	Refer to NFPA 70E Table 130.5(G)
Bolted Fault	8.92 kA
480 VAC	Nominal System Voltage
42 in	Limited Approach
12 in	Restricted Approach
Jun 25, 2019	Date of Study

Location: PROCESS WATER PP CP

WARNING

Arc Flash and Shock Risk

Appropriate PPE Required

9 in	Arc Flash Boundary
0.35 cal/cm^2	Incident Energy at 18 in
PPE	Refer to NFPA 70E Table 130.5(G)
Bolted Fault	0.72 kA
208 VAC	Nominal System Voltage
42 in	Limited Approach
12 in	Restricted Approach
Jun 25, 2019	Date of Study

Location: BW VALVE 4B DS

WARNING

Arc Flash and Shock Risk

Appropriate PPE Required

8 in	Arc Flash Boundary
0.34 cal/cm^2	Incident Energy at 18 in
PPE	Refer to NFPA 70E Table 130.5(G)
Bolted Fault	0.74 kA
208 VAC	Nominal System Voltage
42 in	Limited Approach
12 in	Restricted Approach
Jun 25, 2019	Date of Study

Location: MO-37 DS

WARNING

Arc Flash and Shock Risk

Appropriate PPE Required

8 in	Arc Flash Boundary
0.35 cal/cm^2	Incident Energy at 18 in
PPE	Refer to NFPA 70E Table 130.5(G)
Bolted Fault	9.14 kA
480 VAC	Nominal System Voltage
42 in	Limited Approach
12 in	Restricted Approach
Jun 25, 2019	Date of Study

Location: COMPRESSOR #1 DS

WARNING

Arc Flash and Shock Risk

Appropriate PPE Required

8 in	Arc Flash Boundary
0.34 cal/cm^2	Incident Energy at 18 in
PPE	Refer to NFPA 70E Table 130.5(G)
Bolted Fault	0.75 kA
208 VAC	Nominal System Voltage
42 in	Limited Approach
12 in	Restricted Approach
Jun 25, 2019	Date of Study

Location: BW VALVE 20 DS

WARNING

Arc Flash and Shock Risk

Appropriate PPE Required

8 in	Arc Flash Boundary
0.34 cal/cm^2	Incident Energy at 18 in
PPE	Refer to NFPA 70E Table 130.5(G)
Bolted Fault	0.74 kA
208 VAC	Nominal System Voltage
42 in	Limited Approach
12 in	Restricted Approach
Jun 25, 2019	Date of Study

Location: MO-31 DS

WARNING

Arc Flash and Shock Risk

Appropriate PPE Required

8 in	Arc Flash Boundary
0.34 cal/cm^2	Incident Energy at 18 in
PPE	Refer to NFPA 70E Table 130.5(G)
Bolted Fault	0.75 kA
208 VAC	Nominal System Voltage
42 in	Limited Approach
12 in	Restricted Approach
Jun 25, 2019	Date of Study

Location: BW VALVE 8 DS

WARNING

Arc Flash and Shock Risk

Appropriate PPE Required

10 in	Arc Flash Boundary
0.34 cal/cm^2	Incident Energy at 18 in
PPE	Refer to NFPA 70E Table 130.5(G)
Bolted Fault	0.69 kA
208 VAC	Nominal System Voltage
42 in	Limited Approach
12 in	Restricted Approach
Jun 25, 2019	Date of Study

Location: PNL MID

WARNING

Arc Flash and Shock Risk

Appropriate PPE Required

8 in	Arc Flash Boundary
0.33 cal/cm^2	Incident Energy at 18 in
PPE	Refer to NFPA 70E Table 130.5(G)
Bolted Fault	0.82 kA
208 VAC	Nominal System Voltage
42 in	Limited Approach
12 in	Restricted Approach
Jun 25, 2019	Date of Study

Location: BW VALVE 9 D

WARNING

Arc Flash and Shock Risk

Appropriate PPE Required

8 in	Arc Flash Boundary
0.33 cal/cm^2	Incident Energy at 18 in
PPE	Refer to NFPA 70E Table 130.5(G)
Bolted Fault	8.70 kA
480 VAC	Nominal System Voltage
42 in	Limited Approach
12 in	Restricted Approach
Jun 25, 2019	Date of Study

Location: COMPRESSOR #2 DS

WARNING

Arc Flash and Shock Risk

Appropriate PPE Required

8 in	Arc Flash Boundary
0.32 cal/cm^2	Incident Energy at 18 in
PPE	Refer to NFPA 70E Table 130.5(G)
Bolted Fault	3.26 kA
480 VAC	Nominal System Voltage
42 in	Limited Approach
12 in	Restricted Approach
Jun 25, 2019	Date of Study

Location: DS_HT WTR HTR1

WARNING

Arc Flash and Shock Risk

Appropriate PPE Required

8 in	Arc Flash Boundary
0.33 cal/cm^2	Incident Energy at 18 in
PPE	Refer to NFPA 70E Table 130.5(G)
Bolted Fault	0.82 kA
208 VAC	Nominal System Voltage
42 in	Limited Approach
12 in	Restricted Approach
Jun 25, 2019	Date of Study

Location: BW VALVE 21 DS

WARNING

Arc Flash and Shock Risk

Appropriate PPE Required

8 in	Arc Flash Boundary
0.32 cal/cm^2	Incident Energy at 18 in
PPE	Refer to NFPA 70E Table 130.5(G)
Bolted Fault	8.31 kA
480 VAC	Nominal System Voltage
42 in	Limited Approach
12 in	Restricted Approach
Jun 25, 2019	Date of Study

Location: COMPRESSOR CNTRL TX DS

WARNING

Arc Flash and Shock Risk

Appropriate PPE Required

8 in	Arc Flash Boundary
0.32 cal/cm^2	Incident Energy at 18 in
PPE	Refer to NFPA 70E Table 130.5(G)
Bolted Fault	0.84 kA
208 VAC	Nominal System Voltage
42 in	Limited Approach
12 in	Restricted Approach
Jun 25, 2019	Date of Study

Location: **BW PP#1 SUC VLV DS**

WARNING

Arc Flash and Shock Risk

Appropriate PPE Required

8 in	Arc Flash Boundary
0.30 cal/cm^2	Incident Energy at 18 in
PPE	Refer to NFPA 70E Table 130.5(G)
Bolted Fault	6.00 kA
480 VAC	Nominal System Voltage
42 in	Limited Approach
12 in	Restricted Approach
Jun 25, 2019	Date of Study

Location: **60 HP PUMP CONTROL PANEL**

WARNING

Arc Flash and Shock Risk

Appropriate PPE Required

8 in	Arc Flash Boundary
0.32 cal/cm^2	Incident Energy at 18 in
PPE	Refer to NFPA 70E Table 130.5(G)
Bolted Fault	0.86 kA
208 VAC	Nominal System Voltage
42 in	Limited Approach
12 in	Restricted Approach
Jun 25, 2019	Date of Study

Location: **BW VALVE 1B DS**

WARNING

Arc Flash and Shock Risk

Appropriate PPE Required

7 in	Arc Flash Boundary
0.26 cal/cm^2	Incident Energy at 18 in
PPE	Refer to NFPA 70E Table 130.5(G)
Bolted Fault	6.41 kA
480 VAC	Nominal System Voltage
42 in	Limited Approach
12 in	Restricted Approach
Jun 25, 2019	Date of Study

Location: **WATER HEATER DS**

WARNING

Arc Flash and Shock Risk

Appropriate PPE Required

8 in	Arc Flash Boundary
0.30 cal/cm^2	Incident Energy at 18 in
PPE	Refer to NFPA 70E Table 130.5(G)
Bolted Fault	0.90 kA
208 VAC	Nominal System Voltage
42 in	Limited Approach
12 in	Restricted Approach
Jun 25, 2019	Date of Study

Location: **BW VALVE 4A DS**

WARNING

Arc Flash and Shock Risk

Appropriate PPE Required

7 in	Arc Flash Boundary
0.25 cal/cm^2	Incident Energy at 18 in
PPE	Refer to NFPA 70E Table 130.5(G)
Bolted Fault	6.11 kA
480 VAC	Nominal System Voltage
42 in	Limited Approach
12 in	Restricted Approach
Jun 25, 2019	Date of Study

Location: **POWER PANEL EPL**

WARNING

Arc Flash and Shock Risk

Appropriate PPE Required

6 in	Arc Flash Boundary
0.22 cal/cm^2	Incident Energy at 18 in
PPE	Refer to NFPA 70E Table 130.5(G)
Bolted Fault	6.87 kA
480 VAC	Nominal System Voltage
42 in	Limited Approach
12 in	Restricted Approach
Jun 25, 2019	Date of Study

Location: DS_COMP BLOWER E

WARNING

Arc Flash and Shock Risk

Appropriate PPE Required

8 in	Arc Flash Boundary
0.22 cal/cm^2	Incident Energy at 18 in
PPE	Refer to NFPA 70E Table 130.5(G)
Bolted Fault	0.21 kA
208 VAC	Nominal System Voltage
42 in	Limited Approach
12 in	Restricted Approach
Jun 25, 2019	Date of Study

Location: FILTER 1-2 PANEL

WARNING

Arc Flash and Shock Risk

Appropriate PPE Required

6 in	Arc Flash Boundary
0.22 cal/cm^2	Incident Energy at 18 in
PPE	Refer to NFPA 70E Table 130.5(G)
Bolted Fault	6.87 kA
480 VAC	Nominal System Voltage
42 in	Limited Approach
12 in	Restricted Approach
Jun 25, 2019	Date of Study

Location: DS_COMP BLOWER W

WARNING

Arc Flash and Shock Risk

Appropriate PPE Required

6 in	Arc Flash Boundary
0.21 cal/cm^2	Incident Energy at 18 in
PPE	Refer to NFPA 70E Table 130.5(G)
Bolted Fault	5.13 kA
480 VAC	Nominal System Voltage
42 in	Limited Approach
12 in	Restricted Approach
Jun 25, 2019	Date of Study

Location: EF-17 DS

WARNING

Arc Flash and Shock Risk

Appropriate PPE Required

6 in	Arc Flash Boundary
0.22 cal/cm^2	Incident Energy at 18 in
PPE	Refer to NFPA 70E Table 130.5(G)
Bolted Fault	5.30 kA
480 VAC	Nominal System Voltage
42 in	Limited Approach
12 in	Restricted Approach
Jun 25, 2019	Date of Study

Location: CPNL_DUP EJECTOR

WARNING

Arc Flash and Shock Risk

Appropriate PPE Required

6 in	Arc Flash Boundary
0.21 cal/cm^2	Incident Energy at 18 in
PPE	Refer to NFPA 70E Table 130.5(G)
Bolted Fault	4.66 kA
480 VAC	Nominal System Voltage
42 in	Limited Approach
12 in	Restricted Approach
Jun 25, 2019	Date of Study

Location: DOM WTR PP CP

WARNING

Arc Flash and Shock Risk

Appropriate PPE Required

6 in	Arc Flash Boundary
0.19 cal/cm^2	Incident Energy at 18 in
PPE	Refer to NFPA 70E Table 130.5(G)
Bolted Fault	5.38 kA
480 VAC	Nominal System Voltage
42 in	Limited Approach
12 in	Restricted Approach
Jun 25, 2019	Date of Study

Location: CND WTR PP1 DS

WARNING

Arc Flash and Shock Risk

Appropriate PPE Required

6 in	Arc Flash Boundary
0.19 cal/cm^2	Incident Energy at 18 in
PPE	Refer to NFPA 70E Table 130.5(G)
Bolted Fault	5.30 kA
480 VAC	Nominal System Voltage
42 in	Limited Approach
12 in	Restricted Approach
Jun 25, 2019	Date of Study

Location: EF-11 (3) DS

WARNING

Arc Flash and Shock Risk

Appropriate PPE Required

6 in	Arc Flash Boundary
0.19 cal/cm^2	Incident Energy at 18 in
PPE	Refer to NFPA 70E Table 130.5(G)
Bolted Fault	5.38 kA
480 VAC	Nominal System Voltage
42 in	Limited Approach
12 in	Restricted Approach
Jun 25, 2019	Date of Study

Location: CND WTR PP2 DS

WARNING

Arc Flash and Shock Risk

Appropriate PPE Required

6 in	Arc Flash Boundary
0.19 cal/cm^2	Incident Energy at 18 in
PPE	Refer to NFPA 70E Table 130.5(G)
Bolted Fault	5.30 kA
480 VAC	Nominal System Voltage
42 in	Limited Approach
12 in	Restricted Approach
Jun 25, 2019	Date of Study

Location: EF-11 (3) DS

WARNING

Arc Flash and Shock Risk

Appropriate PPE Required

6 in	Arc Flash Boundary
0.19 cal/cm^2	Incident Energy at 18 in
PPE	Refer to NFPA 70E Table 130.5(G)
Bolted Fault	4.57 kA
480 VAC	Nominal System Voltage
42 in	Limited Approach
12 in	Restricted Approach
Jun 25, 2019	Date of Study

Location: COOLING TWR DS

WARNING

Arc Flash and Shock Risk

Appropriate PPE Required

6 in	Arc Flash Boundary
0.19 cal/cm^2	Incident Energy at 18 in
PPE	Refer to NFPA 70E Table 130.5(G)
Bolted Fault	5.30 kA
480 VAC	Nominal System Voltage
42 in	Limited Approach
12 in	Restricted Approach
Jun 25, 2019	Date of Study

Location: EF-11 (3) DS

WARNING

Arc Flash and Shock Risk

Appropriate PPE Required

6 in	Arc Flash Boundary
0.19 cal/cm^2	Incident Energy at 18 in
PPE	Refer to NFPA 70E Table 130.5(G)
Bolted Fault	5.29 kA
480 VAC	Nominal System Voltage
42 in	Limited Approach
12 in	Restricted Approach
Jun 25, 2019	Date of Study

Location: EF-11 (1) DS

WARNING

Arc Flash and Shock Risk

Appropriate PPE Required

6 in	Arc Flash Boundary
0.18 cal/cm^2	Incident Energy at 18 in
PPE	Refer to NFPA 70E Table 130.5(G)
Bolted Fault	4.85 kA
480 VAC	Nominal System Voltage
42 in	Limited Approach
12 in	Restricted Approach
Jun 25, 2019	Date of Study

Location: DS_DUCT HEATER E

WARNING

Arc Flash and Shock Risk

Appropriate PPE Required

6 in	Arc Flash Boundary
0.19 cal/cm^2	Incident Energy at 18 in
PPE	Refer to NFPA 70E Table 130.5(G)
Bolted Fault	4.51 kA
480 VAC	Nominal System Voltage
42 in	Limited Approach
12 in	Restricted Approach
Jun 25, 2019	Date of Study

Location: 1 TON HOIST DS

WARNING

Arc Flash and Shock Risk

Appropriate PPE Required

6 in	Arc Flash Boundary
0.18 cal/cm^2	Incident Energy at 18 in
PPE	Refer to NFPA 70E Table 130.5(G)
Bolted Fault	4.85 kA
480 VAC	Nominal System Voltage
42 in	Limited Approach
12 in	Restricted Approach
Jun 25, 2019	Date of Study

Location: DS_DUCT HEATER W

WARNING

Arc Flash and Shock Risk

Appropriate PPE Required

6 in	Arc Flash Boundary
0.18 cal/cm^2	Incident Energy at 18 in
PPE	Refer to NFPA 70E Table 130.5(G)
Bolted Fault	5.13 kA
480 VAC	Nominal System Voltage
42 in	Limited Approach
12 in	Restricted Approach
Jun 25, 2019	Date of Study

Location: DS_HV-1

WARNING

Arc Flash and Shock Risk

Appropriate PPE Required

6 in	Arc Flash Boundary
0.17 cal/cm^2	Incident Energy at 18 in
PPE	Refer to NFPA 70E Table 130.5(G)
Bolted Fault	4.14 kA
480 VAC	Nominal System Voltage
42 in	Limited Approach
12 in	Restricted Approach
Jun 25, 2019	Date of Study

Location: EF-16 DS

WARNING

Arc Flash and Shock Risk

Appropriate PPE Required

5 in	Arc Flash Boundary
0.17 cal/cm^2	Incident Energy at 18 in
PPE	Refer to NFPA 70E Table 130.5(G)
Bolted Fault	4.04 kA
480 VAC	Nominal System Voltage
42 in	Limited Approach
12 in	Restricted Approach
Jun 25, 2019	Date of Study

Location: BOILER FD PP1 DS

WARNING

Arc Flash and Shock Risk

Appropriate PPE Required

5 in	Arc Flash Boundary
0.14 cal/cm^2	Incident Energy at 18 in
PPE	Refer to NFPA 70E Table 130.5(G)
Bolted Fault	3.97 kA
480 VAC	Nominal System Voltage
42 in	Limited Approach
12 in	Restricted Approach
Jun 25, 2019	Date of Study

Location: CHLD WTR PP1 DS

WARNING

Arc Flash and Shock Risk

Appropriate PPE Required

5 in	Arc Flash Boundary
0.17 cal/cm^2	Incident Energy at 18 in
PPE	Refer to NFPA 70E Table 130.5(G)
Bolted Fault	4.04 kA
480 VAC	Nominal System Voltage
42 in	Limited Approach
12 in	Restricted Approach
Jun 25, 2019	Date of Study

Location: BOILER FD PP2 DS

WARNING

Arc Flash and Shock Risk

Appropriate PPE Required

5 in	Arc Flash Boundary
0.14 cal/cm^2	Incident Energy at 18 in
PPE	Refer to NFPA 70E Table 130.5(G)
Bolted Fault	3.97 kA
480 VAC	Nominal System Voltage
42 in	Limited Approach
12 in	Restricted Approach
Jun 25, 2019	Date of Study

Location: CHLD WTR PP2 DS

WARNING

Arc Flash and Shock Risk

Appropriate PPE Required

5 in	Arc Flash Boundary
0.17 cal/cm^2	Incident Energy at 18 in
PPE	Refer to NFPA 70E Table 130.5(G)
Bolted Fault	3.97 kA
480 VAC	Nominal System Voltage
42 in	Limited Approach
12 in	Restricted Approach
Jun 25, 2019	Date of Study

Location: CNTRL_COOLING TWR

WARNING

Arc Flash and Shock Risk

Appropriate PPE Required

5 in	Arc Flash Boundary
0.14 cal/cm^2	Incident Energy at 18 in
PPE	Refer to NFPA 70E Table 130.5(G)
Bolted Fault	3.95 kA
480 VAC	Nominal System Voltage
42 in	Limited Approach
12 in	Restricted Approach
Jun 25, 2019	Date of Study

Location: EF-11 (2) DS

WARNING

Arc Flash and Shock Risk

Appropriate PPE Required

5 in	Arc Flash Boundary
0.14 cal/cm^2	Incident Energy at 18 in
PPE	Refer to NFPA 70E Table 130.5(G)
Bolted Fault	3.95 kA
480 VAC	Nominal System Voltage
42 in	Limited Approach
12 in	Restricted Approach
Jun 25, 2019	Date of Study

Location: EF-11 (2) DS

WARNING

Arc Flash and Shock Risk

Appropriate PPE Required

5 in	Arc Flash Boundary
0.13 cal/cm^2	Incident Energy at 18 in
PPE	Refer to NFPA 70E Table 130.5(G)
Bolted Fault	3.49 kA
208 VAC	Nominal System Voltage
42 in	Limited Approach
12 in	Restricted Approach
Jun 25, 2019	Date of Study

Location: LIGHTING PANEL L1

WARNING

Arc Flash and Shock Risk

Appropriate PPE Required

5 in	Arc Flash Boundary
0.14 cal/cm^2	Incident Energy at 18 in
PPE	Refer to NFPA 70E Table 130.5(G)
Bolted Fault	3.93 kA
480 VAC	Nominal System Voltage
42 in	Limited Approach
12 in	Restricted Approach
Jun 25, 2019	Date of Study

Location: CAUS XFER PP1 DS

WARNING

Arc Flash and Shock Risk

Appropriate PPE Required

5 in	Arc Flash Boundary
0.13 cal/cm^2	Incident Energy at 18 in
PPE	Refer to NFPA 70E Table 130.5(G)
Bolted Fault	3.05 kA
480 VAC	Nominal System Voltage
42 in	Limited Approach
12 in	Restricted Approach
Jun 25, 2019	Date of Study

Location: BOILER #2 DS

WARNING

Arc Flash and Shock Risk

Appropriate PPE Required

5 in	Arc Flash Boundary
0.14 cal/cm^2	Incident Energy at 18 in
PPE	Refer to NFPA 70E Table 130.5(G)
Bolted Fault	3.93 kA
480 VAC	Nominal System Voltage
42 in	Limited Approach
12 in	Restricted Approach
Jun 25, 2019	Date of Study

Location: CAUS XFER PP2 DS

WARNING

Arc Flash and Shock Risk

Appropriate PPE Required

6 in	Arc Flash Boundary
0.13 cal/cm^2	Incident Energy at 18 in
PPE	Refer to NFPA 70E Table 130.5(G)
Bolted Fault	0.31 kA
208 VAC	Nominal System Voltage
42 in	Limited Approach
12 in	Restricted Approach
Jun 25, 2019	Date of Study

Location: MO-27 DS

WARNING

Arc Flash and Shock Risk

Appropriate PPE Required

4 in	Arc Flash Boundary
0.12 cal/cm^2	Incident Energy at 18 in
PPE	Refer to NFPA 70E Table 130.5(G)
Bolted Fault	2.77 kA
480 VAC	Nominal System Voltage
42 in	Limited Approach
12 in	Restricted Approach
Jun 25, 2019	Date of Study

Location: BOILER #2 CP

WARNING

Arc Flash and Shock Risk

Appropriate PPE Required

4 in	Arc Flash Boundary
0.11 cal/cm^2	Incident Energy at 18 in
PPE	Refer to NFPA 70E Table 130.5(G)
Bolted Fault	2.45 kA
480 VAC	Nominal System Voltage
42 in	Limited Approach
12 in	Restricted Approach
Jun 25, 2019	Date of Study

Location: BOILER #1 DS

WARNING

Arc Flash and Shock Risk

Appropriate PPE Required

4 in	Arc Flash Boundary
0.12 cal/cm^2	Incident Energy at 18 in
PPE	Refer to NFPA 70E Table 130.5(G)
Bolted Fault	3.18 kA
480 VAC	Nominal System Voltage
42 in	Limited Approach
12 in	Restricted Approach
Jun 25, 2019	Date of Study

Location: DS_HV-4

WARNING

Arc Flash and Shock Risk

Appropriate PPE Required

5 in	Arc Flash Boundary
0.10 cal/cm^2	Incident Energy at 18 in
PPE	Refer to NFPA 70E Table 130.5(G)
Bolted Fault	0.39 kA
208 VAC	Nominal System Voltage
42 in	Limited Approach
12 in	Restricted Approach
Jun 25, 2019	Date of Study

Location: MO-28 DS

WARNING

Arc Flash and Shock Risk

Appropriate PPE Required

6 in	Arc Flash Boundary
0.11 cal/cm^2	Incident Energy at 18 in
PPE	Refer to NFPA 70E Table 130.5(G)
Bolted Fault	0.34 kA
208 VAC	Nominal System Voltage
42 in	Limited Approach
12 in	Restricted Approach
Jun 25, 2019	Date of Study

Location: MO-36 DS

WARNING

Arc Flash and Shock Risk

Appropriate PPE Required

4 in	Arc Flash Boundary
0.10 cal/cm^2	Incident Energy at 18 in
PPE	Refer to NFPA 70E Table 130.5(G)
Bolted Fault	2.26 kA
480 VAC	Nominal System Voltage
42 in	Limited Approach
12 in	Restricted Approach
Jun 25, 2019	Date of Study

Location: BOILER #1 CP

WARNING

Arc Flash and Shock Risk

Appropriate PPE Required

4 in	Arc Flash Boundary
0.09 cal/cm^2	Incident Energy at 18 in
PPE	Refer to NFPA 70E Table 130.5(G)
Bolted Fault	2.38 kA
480 VAC	Nominal System Voltage
42 in	Limited Approach
12 in	Restricted Approach
Jun 25, 2019	Date of Study

Location: AC-1 DS

WARNING

Arc Flash and Shock Risk

Appropriate PPE Required

3 in	Arc Flash Boundary
0.08 cal/cm^2	Incident Energy at 18 in
PPE	Refer to NFPA 70E Table 130.5(G)
Bolted Fault	1.80 kA
480 VAC	Nominal System Voltage
42 in	Limited Approach
12 in	Restricted Approach
Jun 25, 2019	Date of Study

Location: DEHUMIDIFIER DS

WARNING

Arc Flash and Shock Risk

Appropriate PPE Required

5 in	Arc Flash Boundary
0.09 cal/cm^2	Incident Energy at 18 in
PPE	Refer to NFPA 70E Table 130.5(G)
Bolted Fault	0.44 kA
208 VAC	Nominal System Voltage
42 in	Limited Approach
12 in	Restricted Approach
Jun 25, 2019	Date of Study

Location: MO-33 DS

WARNING

Arc Flash and Shock Risk

Appropriate PPE Required

5 in	Arc Flash Boundary
0.08 cal/cm^2	Incident Energy at 18 in
PPE	Refer to NFPA 70E Table 130.5(G)
Bolted Fault	0.49 kA
208 VAC	Nominal System Voltage
42 in	Limited Approach
12 in	Restricted Approach
Jun 25, 2019	Date of Study

Location: MO-30 DS

WARNING

Arc Flash and Shock Risk

Appropriate PPE Required

4 in	Arc Flash Boundary
0.08 cal/cm^2	Incident Energy at 18 in
PPE	Refer to NFPA 70E Table 130.5(G)
Bolted Fault	2.22 kA
480 VAC	Nominal System Voltage
42 in	Limited Approach
12 in	Restricted Approach
Jun 25, 2019	Date of Study

Location: SUMP PUMP DS

WARNING

Arc Flash and Shock Risk

Appropriate PPE Required

3 in	Arc Flash Boundary
0.08 cal/cm^2	Incident Energy at 18 in
PPE	Refer to NFPA 70E Table 130.5(G)
Bolted Fault	1.70 kA
480 VAC	Nominal System Voltage
42 in	Limited Approach
12 in	Restricted Approach
Jun 25, 2019	Date of Study

Location: CNTRL_DEHUMIDIFIER

WARNING

Arc Flash and Shock Risk

Appropriate PPE Required

3 in	Arc Flash Boundary
0.08 cal/cm^2	Incident Energy at 18 in
PPE	Refer to NFPA 70E Table 130.5(G)
Bolted Fault	1.91 kA
480 VAC	Nominal System Voltage
42 in	Limited Approach
12 in	Restricted Approach
Jun 25, 2019	Date of Study
Location:	**42" BYPASS TEMPORARY EQUIPMENT**

WARNING

Arc Flash and Shock Risk

Appropriate PPE Required

3 in	Arc Flash Boundary
0.08 cal/cm^2	Incident Energy at 18 in
PPE	Refer to NFPA 70E Table 130.5(G)
Bolted Fault	1.91 kA
480 VAC	Nominal System Voltage
42 in	Limited Approach
12 in	Restricted Approach
Jun 25, 2019	Date of Study
Location:	**42" BYPASS TEMPORARY EQUIPMENT**

WARNING

Arc Flash and Shock Risk

Appropriate PPE Required

3 in	Arc Flash Boundary
0.08 cal/cm^2	Incident Energy at 18 in
PPE	Refer to NFPA 70E Table 130.5(G)
Bolted Fault	1.91 kA
480 VAC	Nominal System Voltage
42 in	Limited Approach
12 in	Restricted Approach
Jun 25, 2019	Date of Study
Location:	**42" BYPASS TEMPORARY EQUIPMENT**

WARNING

Arc Flash and Shock Risk

Appropriate PPE Required

5 in	Arc Flash Boundary
0.07 cal/cm^2	Incident Energy at 18 in
PPE	Refer to NFPA 70E Table 130.5(G)
Bolted Fault	0.51 kA
208 VAC	Nominal System Voltage
42 in	Limited Approach
12 in	Restricted Approach
Jun 25, 2019	Date of Study
Location:	**MO-29 DS**

WARNING

Arc Flash and Shock Risk

Appropriate PPE Required

3 in	Arc Flash Boundary
0.08 cal/cm^2	Incident Energy at 18 in
PPE	Refer to NFPA 70E Table 130.5(G)
Bolted Fault	1.91 kA
480 VAC	Nominal System Voltage
42 in	Limited Approach
12 in	Restricted Approach
Jun 25, 2019	Date of Study
Location:	**42" BYPASS TEMPORARY EQUIPMENT**

WARNING

Arc Flash and Shock Risk

Appropriate PPE Required

3 in	Arc Flash Boundary
0.07 cal/cm^2	Incident Energy at 18 in
PPE	Refer to NFPA 70E Table 130.5(G)
Bolted Fault	4.47 kA
208 VAC	Nominal System Voltage
42 in	Limited Approach
12 in	Restricted Approach
Jun 25, 2019	Date of Study
Location:	**DS_LAB STERILIZER**

WARNING

Arc Flash and Shock Risk

Appropriate PPE Required

4 in	Arc Flash Boundary
0.07 cal/cm^2	Incident Energy at 18 in
PPE	Refer to NFPA 70E Table 130.5(G)
Bolted Fault	0.55 kA
208 VAC	Nominal System Voltage
42 in	Limited Approach
12 in	Restricted Approach
Jun 25, 2019	Date of Study

Location: MO-34 DS

WARNING

Arc Flash and Shock Risk

Appropriate PPE Required

3 in	Arc Flash Boundary
0.07 cal/cm^2	Incident Energy at 18 in
PPE	Refer to NFPA 70E Table 130.5(G)
Bolted Fault	4.04 kA
208 VAC	Nominal System Voltage
42 in	Limited Approach
12 in	Restricted Approach
Jun 25, 2019	Date of Study

Location: LIGHTING PANEL EL4 SEC 2

WARNING

Arc Flash and Shock Risk

Appropriate PPE Required

3 in	Arc Flash Boundary
0.07 cal/cm^2	Incident Energy at 18 in
PPE	Refer to NFPA 70E Table 130.5(G)
Bolted Fault	4.13 kA
208 VAC	Nominal System Voltage
42 in	Limited Approach
12 in	Restricted Approach
Jun 25, 2019	Date of Study

Location: LIGHTING PANEL EL4

WARNING

Arc Flash and Shock Risk

Appropriate PPE Required

4 in	Arc Flash Boundary
0.07 cal/cm^2	Incident Energy at 18 in
PPE	Refer to NFPA 70E Table 130.5(G)
Bolted Fault	0.58 kA
208 VAC	Nominal System Voltage
42 in	Limited Approach
12 in	Restricted Approach
Jun 25, 2019	Date of Study

Location: BW VALVE 17 DS

WARNING

Arc Flash and Shock Risk

Appropriate PPE Required

3 in	Arc Flash Boundary
0.07 cal/cm^2	Incident Energy at 18 in
PPE	Refer to NFPA 70E Table 130.5(G)
Bolted Fault	4.13 kA
208 VAC	Nominal System Voltage
42 in	Limited Approach
12 in	Restricted Approach
Jun 25, 2019	Date of Study

Location: LIGHTING PANEL EL4

WARNING

Arc Flash and Shock Risk

Appropriate PPE Required

4 in	Arc Flash Boundary
0.07 cal/cm^2	Incident Energy at 18 in
PPE	Refer to NFPA 70E Table 130.5(G)
Bolted Fault	0.58 kA
208 VAC	Nominal System Voltage
42 in	Limited Approach
12 in	Restricted Approach
Jun 25, 2019	Date of Study

Location: BW VALVE 5 DS

WARNING

Arc Flash and Shock Risk

Appropriate PPE Required

3 in	Arc Flash Boundary
0.07 cal/cm^2	Incident Energy at 18 in
PPE	Refer to NFPA 70E Table 130.5(G)
Bolted Fault	3.87 kA
208 VAC	Nominal System Voltage
42 in	Limited Approach
12 in	Restricted Approach
Jun 25, 2019	Date of Study

Location: LIGHTING PANEL EL2

WARNING

Arc Flash and Shock Risk

Appropriate PPE Required

3 in	Arc Flash Boundary
0.06 cal/cm^2	Incident Energy at 18 in
PPE	Refer to NFPA 70E Table 130.5(G)
Bolted Fault	3.78 kA
208 VAC	Nominal System Voltage
42 in	Limited Approach
12 in	Restricted Approach
Jun 25, 2019	Date of Study

Location: LIGHTING PANEL EL2 SEC 2

WARNING

Arc Flash and Shock Risk

Appropriate PPE Required

3 in	Arc Flash Boundary
0.06 cal/cm^2	Incident Energy at 18 in
PPE	Refer to NFPA 70E Table 130.5(G)
Bolted Fault	1.13 kA
208 VAC	Nominal System Voltage
42 in	Limited Approach
12 in	Restricted Approach
Jun 25, 2019	Date of Study

Location: BW VALVE 1A DS

WARNING

Arc Flash and Shock Risk

Appropriate PPE Required

4 in	Arc Flash Boundary
0.06 cal/cm^2	Incident Energy at 18 in
PPE	Refer to NFPA 70E Table 130.5(G)
Bolted Fault	0.62 kA
208 VAC	Nominal System Voltage
42 in	Limited Approach
12 in	Restricted Approach
Jun 25, 2019	Date of Study

Location: BW PP#2 SUC VLV DS

WARNING

Arc Flash and Shock Risk

Appropriate PPE Required

3 in	Arc Flash Boundary
0.06 cal/cm^2	Incident Energy at 18 in
PPE	Refer to NFPA 70E Table 130.5(G)
Bolted Fault	1.52 kA
480 VAC	Nominal System Voltage
42 in	Limited Approach
12 in	Restricted Approach
Jun 25, 2019	Date of Study

Location: HVRH

WARNING

Arc Flash and Shock Risk

Appropriate PPE Required

3 in	Arc Flash Boundary
0.06 cal/cm^2	Incident Energy at 18 in
PPE	Refer to NFPA 70E Table 130.5(G)
Bolted Fault	1.38 kA
480 VAC	Nominal System Voltage
42 in	Limited Approach
12 in	Restricted Approach
Jun 25, 2019	Date of Study

Location: GARAGE DS

WARNING

Arc Flash and Shock Risk

Appropriate PPE Required

3 in	Arc Flash Boundary
0.06 cal/cm^2	Incident Energy at 18 in
PPE	Refer to NFPA 70E Table 130.5(G)
Bolted Fault	3.13 kA
208 VAC	Nominal System Voltage
42 in	Limited Approach
12 in	Restricted Approach
Jun 25, 2019	Date of Study

Location: PANEL DP-CA

WARNING

Arc Flash and Shock Risk

Appropriate PPE Required

3 in	Arc Flash Boundary
0.06 cal/cm^2	Incident Energy at 18 in
PPE	Refer to NFPA 70E Table 130.5(G)
Bolted Fault	3.11 kA
208 VAC	Nominal System Voltage
42 in	Limited Approach
12 in	Restricted Approach
Jun 25, 2019	Date of Study

Location: LIGHTING PANEL EL1

WARNING

Arc Flash and Shock Risk

Appropriate PPE Required

3 in	Arc Flash Boundary
0.06 cal/cm^2	Incident Energy at 18 in
PPE	Refer to NFPA 70E Table 130.5(G)
Bolted Fault	3.13 kA
208 VAC	Nominal System Voltage
42 in	Limited Approach
12 in	Restricted Approach
Jun 25, 2019	Date of Study

Location: PANEL DPCA 2

WARNING

Arc Flash and Shock Risk

Appropriate PPE Required

3 in	Arc Flash Boundary
0.05 cal/cm^2	Incident Energy at 18 in
PPE	Refer to NFPA 70E Table 130.5(G)
Bolted Fault	1.38 kA
480 VAC	Nominal System Voltage
42 in	Limited Approach
12 in	Restricted Approach
Jun 25, 2019	Date of Study

Location: EF-10 DS

WARNING

Arc Flash and Shock Risk

Appropriate PPE Required

3 in	Arc Flash Boundary
0.06 cal/cm^2	Incident Energy at 18 in
PPE	Refer to NFPA 70E Table 130.5(G)
Bolted Fault	1.55 kA
208 VAC	Nominal System Voltage
42 in	Limited Approach
12 in	Restricted Approach
Jun 25, 2019	Date of Study

Location: PANEL 3

WARNING

Arc Flash and Shock Risk

Appropriate PPE Required

3 in	Arc Flash Boundary
0.05 cal/cm^2	Incident Energy at 18 in
PPE	Refer to NFPA 70E Table 130.5(G)
Bolted Fault	2.91 kA
208 VAC	Nominal System Voltage
42 in	Limited Approach
12 in	Restricted Approach
Jun 25, 2019	Date of Study

Location: LOCAL DS_LAB STERILIZER

WARNING

Arc Flash and Shock Risk

Appropriate PPE Required

3 in	Arc Flash Boundary
0.05 cal/cm^2	Incident Energy at 18 in
PPE	Refer to NFPA 70E Table 130.5(G)
Bolted Fault	2.78 kA
208 VAC	Nominal System Voltage
42 in	Limited Approach
12 in	Restricted Approach
Jun 25, 2019	Date of Study

Location: LIGHTING PANEL L4

WARNING

Arc Flash and Shock Risk

Appropriate PPE Required

3 in	Arc Flash Boundary
0.05 cal/cm^2	Incident Energy at 18 in
PPE	Refer to NFPA 70E Table 130.5(G)
Bolted Fault	1.21 kA
480 VAC	Nominal System Voltage
42 in	Limited Approach
12 in	Restricted Approach
Jun 25, 2019	Date of Study

Location: HV-5 DS

WARNING

Arc Flash and Shock Risk

Appropriate PPE Required

4 in	Arc Flash Boundary
0.05 cal/cm^2	Incident Energy at 18 in
PPE	Refer to NFPA 70E Table 130.5(G)
Bolted Fault	0.67 kA
208 VAC	Nominal System Voltage
42 in	Limited Approach
12 in	Restricted Approach
Jun 25, 2019	Date of Study

Location: COMPRESSOR DS

WARNING

Arc Flash and Shock Risk

Appropriate PPE Required

3 in	Arc Flash Boundary
0.05 cal/cm^2	Incident Energy at 18 in
PPE	Refer to NFPA 70E Table 130.5(G)
Bolted Fault	1.27 kA
208 VAC	Nominal System Voltage
42 in	Limited Approach
12 in	Restricted Approach
Jun 25, 2019	Date of Study

Location: GARAGE DOOR DS

WARNING

Arc Flash and Shock Risk

Appropriate PPE Required

4 in	Arc Flash Boundary
0.05 cal/cm^2	Incident Energy at 18 in
PPE	Refer to NFPA 70E Table 130.5(G)
Bolted Fault	0.67 kA
208 VAC	Nominal System Voltage
42 in	Limited Approach
12 in	Restricted Approach
Jun 25, 2019	Date of Study

Location: GAS PUMP DS

WARNING

Arc Flash and Shock Risk

Appropriate PPE Required

3 in	Arc Flash Boundary
0.05 cal/cm^2	Incident Energy at 18 in
PPE	Refer to NFPA 70E Table 130.5(G)
Bolted Fault	2.50 kA
208 VAC	Nominal System Voltage
42 in	Limited Approach
12 in	Restricted Approach
Jun 25, 2019	Date of Study

Location: LIGHTING PANEL EL3

WARNING

Arc Flash and Shock Risk

Appropriate PPE Required

3 in	Arc Flash Boundary
0.05 cal/cm^2	Incident Energy at 18 in
PPE	Refer to NFPA 70E Table 130.5(G)
Bolted Fault	2.50 kA
208 VAC	Nominal System Voltage
42 in	Limited Approach
12 in	Restricted Approach
Jun 25, 2019	Date of Study

Location: PANEL SCADA (UPS)

WARNING

Arc Flash and Shock Risk

Appropriate PPE Required

2 in	Arc Flash Boundary
0.04 cal/cm^2	Incident Energy at 18 in
PPE	Refer to NFPA 70E Table 130.5(G)
Bolted Fault	1.12 kA
480 VAC	Nominal System Voltage
42 in	Limited Approach
12 in	Restricted Approach
Jun 25, 2019	Date of Study

Location: HV-3 DS

WARNING

Arc Flash and Shock Risk

Appropriate PPE Required

3 in	Arc Flash Boundary
0.05 cal/cm^2	Incident Energy at 18 in
PPE	Refer to NFPA 70E Table 130.5(G)
Bolted Fault	2.50 kA
208 VAC	Nominal System Voltage
42 in	Limited Approach
12 in	Restricted Approach
Jun 25, 2019	Date of Study

Location: PANEL TEL/SEC (UPS)

WARNING

Arc Flash and Shock Risk

Appropriate PPE Required

2 in	Arc Flash Boundary
0.04 cal/cm^2	Incident Energy at 18 in
PPE	Refer to NFPA 70E Table 130.5(G)
Bolted Fault	2.27 kA
208 VAC	Nominal System Voltage
42 in	Limited Approach
12 in	Restricted Approach
Jun 25, 2019	Date of Study

Location: LM DS

WARNING

Arc Flash and Shock Risk

Appropriate PPE Required

2 in	Arc Flash Boundary
0.05 cal/cm^2	Incident Energy at 18 in
PPE	Refer to NFPA 70E Table 130.5(G)
Bolted Fault	2.47 kA
208 VAC	Nominal System Voltage
42 in	Limited Approach
12 in	Restricted Approach
Jun 25, 2019	Date of Study

Location: EL-3 SUB PANEL

WARNING

Arc Flash and Shock Risk

Appropriate PPE Required

2 in	Arc Flash Boundary
0.04 cal/cm^2	Incident Energy at 18 in
PPE	Refer to NFPA 70E Table 130.5(G)
Bolted Fault	2.26 kA
208 VAC	Nominal System Voltage
42 in	Limited Approach
12 in	Restricted Approach
Jun 25, 2019	Date of Study

Location: LIGHTING PANEL L3

WARNING

Arc Flash and Shock Risk

Appropriate PPE Required

2 in	Arc Flash Boundary
0.04 cal/cm^2	Incident Energy at 18 in
PPE	Refer to NFPA 70E Table 130.5(G)
Bolted Fault	1.82 kA
208 VAC	Nominal System Voltage
42 in	Limited Approach
12 in	Restricted Approach
Jun 25, 2019	Date of Study

Location: LIGHTING PANEL EL5

WARNING

Arc Flash and Shock Risk

Appropriate PPE Required

2 in	Arc Flash Boundary
0.03 cal/cm^2	Incident Energy at 18 in
PPE	Refer to NFPA 70E Table 130.5(G)
Bolted Fault	1.19 kA
208 VAC	Nominal System Voltage
42 in	Limited Approach
12 in	Restricted Approach
Jun 25, 2019	Date of Study

Location: BW VALVE 12 DS

WARNING

Arc Flash and Shock Risk

Appropriate PPE Required

2 in	Arc Flash Boundary
0.03 cal/cm^2	Incident Energy at 18 in
PPE	Refer to NFPA 70E Table 130.5(G)
Bolted Fault	1.22 kA
208 VAC	Nominal System Voltage
42 in	Limited Approach
12 in	Restricted Approach
Jun 25, 2019	Date of Study

Location: LCS DS

WARNING

Arc Flash and Shock Risk

Appropriate PPE Required

2 in	Arc Flash Boundary
0.03 cal/cm^2	Incident Energy at 18 in
PPE	Refer to NFPA 70E Table 130.5(G)
Bolted Fault	1.19 kA
208 VAC	Nominal System Voltage
42 in	Limited Approach
12 in	Restricted Approach
Jun 25, 2019	Date of Study

Location: BW VALVE 24 DS

WARNING

Arc Flash and Shock Risk

Appropriate PPE Required

2 in	Arc Flash Boundary
0.03 cal/cm^2	Incident Energy at 18 in
PPE	Refer to NFPA 70E Table 130.5(G)
Bolted Fault	1.21 kA
208 VAC	Nominal System Voltage
42 in	Limited Approach
12 in	Restricted Approach
Jun 25, 2019	Date of Study

Location: LIGHTING PANEL LCS

WARNING

Arc Flash and Shock Risk

Appropriate PPE Required

2 in	Arc Flash Boundary
0.02 cal/cm^2	Incident Energy at 18 in
PPE	Refer to NFPA 70E Table 130.5(G)
Bolted Fault	0.99 kA
208 VAC	Nominal System Voltage
42 in	Limited Approach
12 in	Restricted Approach
Jun 25, 2019	Date of Study

Location: FCV-102 DS

WARNING

Arc Flash and Shock Risk

Appropriate PPE Required

2 in	Arc Flash Boundary
0.02 cal/cm^2	Incident Energy at 18 in
PPE	Refer to NFPA 70E Table 130.5(G)
Bolted Fault	0.89 kA
208 VAC	Nominal System Voltage
42 in	Limited Approach
12 in	Restricted Approach
Jun 25, 2019	Date of Study

Location: MO-32 DS

WARNING

Arc Flash and Shock Risk

Appropriate PPE Required

1 in	Arc Flash Boundary
0.00 cal/cm^2	Incident Energy at 18 in
PPE	Refer to NFPA 70E Table 130.5(G)
Bolted Fault	0.70 kA
208 VAC	Nominal System Voltage
42 in	Limited Approach
12 in	Restricted Approach
Jun 25, 2019	Date of Study

Location: MO-35 DS

WARNING

Arc Flash and Shock Risk

Appropriate PPE Required

2 in	Arc Flash Boundary
0.02 cal/cm^2	Incident Energy at 18 in
PPE	Refer to NFPA 70E Table 130.5(G)
Bolted Fault	0.89 kA
208 VAC	Nominal System Voltage
42 in	Limited Approach
12 in	Restricted Approach
Jun 25, 2019	Date of Study

Location: MO-38 DS

WARNING

Arc Flash and Shock Risk

Appropriate PPE Required

1 in	Arc Flash Boundary
0.01 cal/cm^2	Incident Energy at 18 in
PPE	Refer to NFPA 70E Table 130.5(G)
Bolted Fault	0.48 kA
208 VAC	Nominal System Voltage
42 in	Limited Approach
12 in	Restricted Approach
Jun 25, 2019	Date of Study

Location: LIGHTING PANEL LM

Structural Analysis of Bridge #3

SUBMITTAL CERTIFICATION FORM

PROJECT: West Parish Raw Water Conveyance Syst. Improvements – Westfield, MA
ENGINEER: CDM Smith . ENGINEER'S PROJECT NO.: CA-1808-18
CONTRACTOR: Ludlow Construction CONTRACTOR'S PROJECT NO.: 1720

TRANSMITTAL NO.: _____ SUBMITTAL NO.: SWSC WPF Bridge #3-001
SPECIFICATION NO.: _____ DRAWING NO: _____

DESCRIPTION: Bridge - Stamped
MANUFACTURER: Mabey Bridge

The above referenced submittal has been reviewed by the undersigned and I/we certify that the materials and/or equipment meets or exceeds the project specification requirements; that field measurements, dimensions, quantities, specified performance criteria, installation requirements, materials, catalog numbers and related materials have been verified; that all materials with respect to intended use, fabrication, shipping, handling, storage, assembly, and installation pertaining to the performance of the work has been determined and verified; that review includes all information related to the contractor's sole responsibility for means, methods, techniques, sequences, and procedures of construction and safety; and item has been coordinated with the overall project with:

NO DEVIATIONS

A COMPLETE LIST OF DEVIATIONS AS FOLLOWS:

_____
_____
_____
_____
_____
_____

SUBMITTED BY: Paul Fragoso DATE: 6/30/18

GENERAL CONTRACTOR'S STAMP

"Certification Statement" by this submittal, I hereby represent that I have determined and verified all field measurements, field construction criteria, materials, dimensions, catalog numbers, and similar data and I have checked and coordinated each item with other applicable approved shop drawings and all contract requirements.

mabey

enabling global infrastructure

BRID-07397-0

Ludlow Constr., Inc.

Westfield, MA

BRIDGE PROJECT ENGINEERING

TABLE OF CONTENTS

	SHEET
BRIDGE DRAWINGS	001 - 007
BRIDGE CALCULATIONS	010
BRIDGE CALCULATION ADDENDA	023
BRIDGE PARTS LIST	028
BRIDGE LAUNCH & ERECTION SCHEME	030

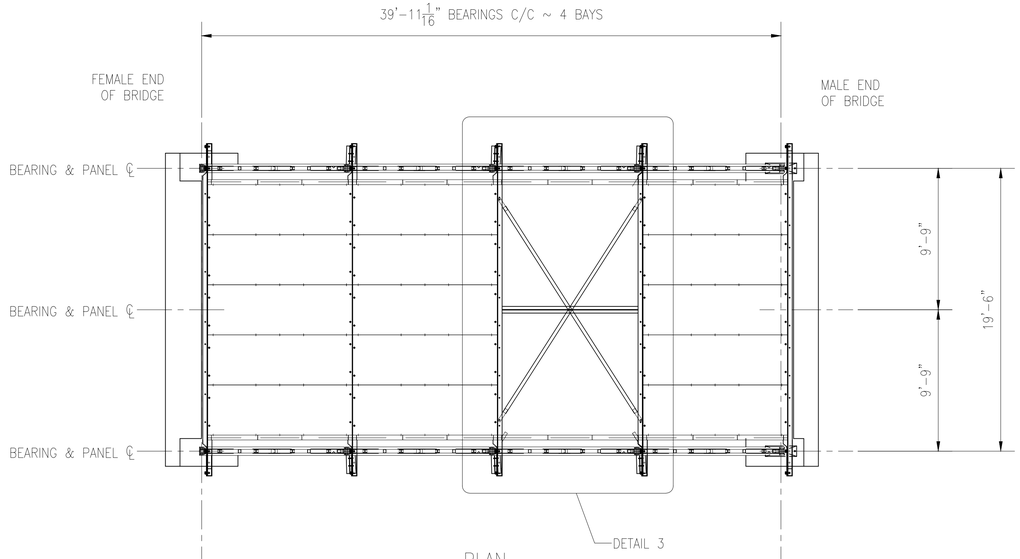

PLAN

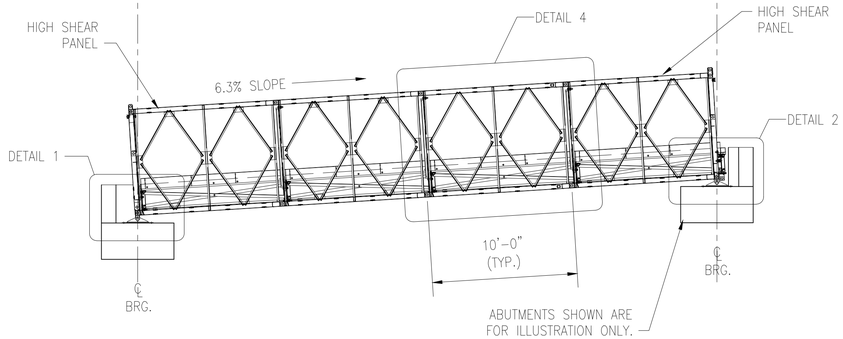

ELEVATION

DocuSigned by:
0478568A8F2D42...

COMMONWEALTH OF MASSACHUSETTS
DOUGLAS C. BRUNOT
STRUCTURAL
NO. 53636
REGISTERED PROFESSIONAL ENGINEER

6/29/2018 | 11:37 AM EDT

GENERAL ARRANGEMENT FOR
4 BAY - C200
17.2' ROADWIDTH
HL93 LIVE LOADING
SSH+ TRUSSES

Client: LUDLOW CONSTRUCTION CO., INC			
Job Name: P0075693		Location: WESTFIELD, MA	
Drawn By: CJ	Date: 6-28-2018	Dwg. No.	
Checked By: MR	Date: 6-28-2018	Order no.: BRID-07397-0	
Revision		Sheet: 1 OF 7	Scale: Do Not Scale

mabey enabling global infrastructure

MABEY INC

6770 DORSEY RD. ELKRIDGE, MD. 21075

TEL : 410 379 2800
FAX : 410 379 2801

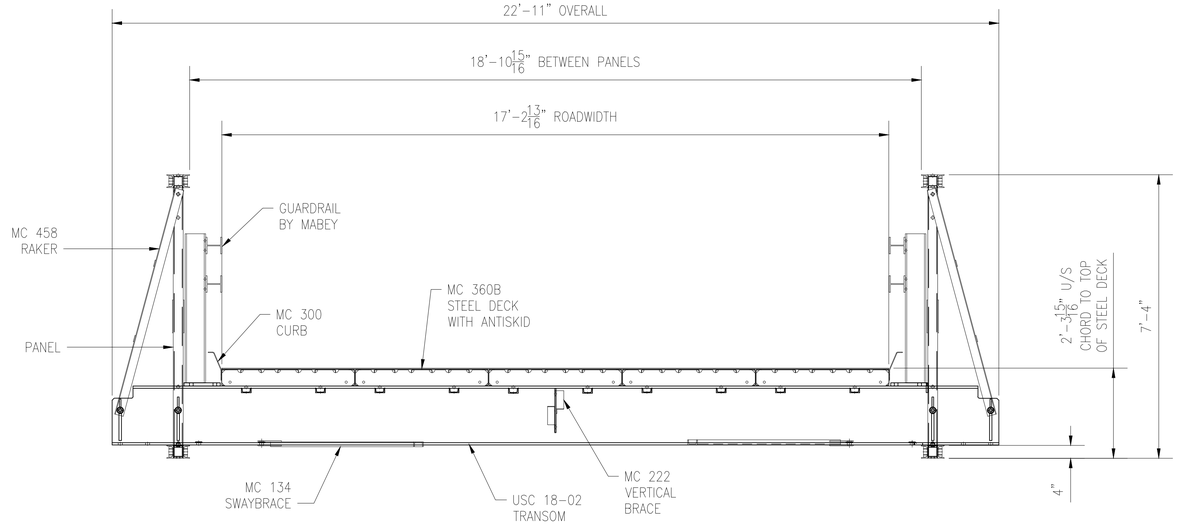

TRANSVERSE SECTION

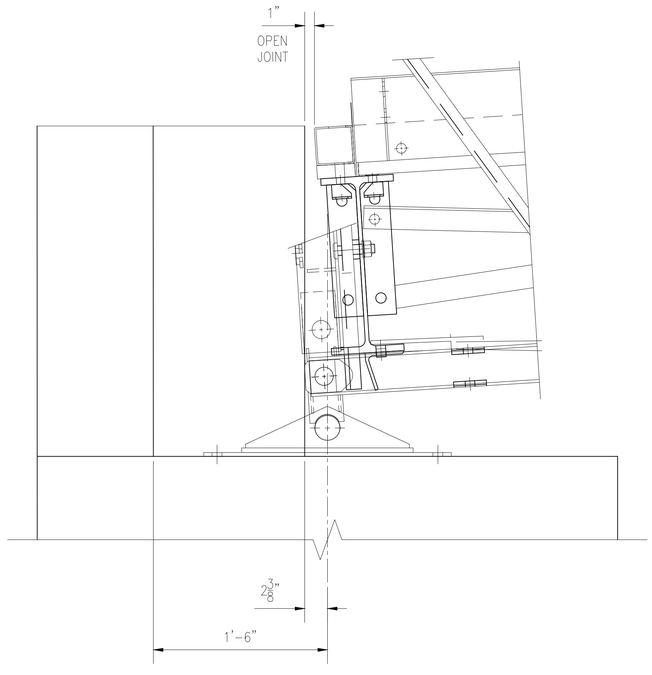

DETAIL 1

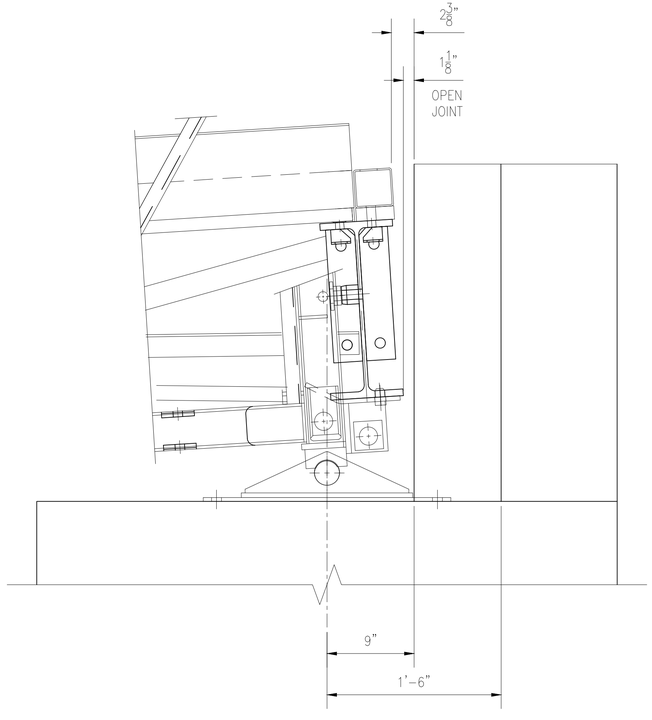

DETAIL 2

DocuSigned by:
0478568A8F2D...
COMMONWEALTH OF MASSACHUSETTS
DOUGLAS C. BRUNOT
STRUCTURAL
NO. 53636
REGISTERED
PROFESSIONAL ENGINEER
6/29/2018 11:37 AM EDT

TRANSVERSE SECTION
AND DETAILS FOR
4 BAY - C200
17.2' ROADWIDTH
HL93 LIVE LOADING
SSH+ TRUSSES

Client: LUDLOW CONSTRUCTION CO., INC			
Job Name: P0075693		Location: WESTFIELD, MA	
Drawn By: CJ	Date: 6-28-2018		Dwg. No.
Checked By: MR	Date: 6-28-2018		Order no.: BRID-07397-0
Revision		Sheet: 2 OF 7	Scale: Do Not Scale

mabey
enabling global infrastructure
M A B E Y I N C
6770 DORSEY RD. ELKRIDGE, MD. 21075
TEL : 410 379 2800
FAX : 410 379 2801

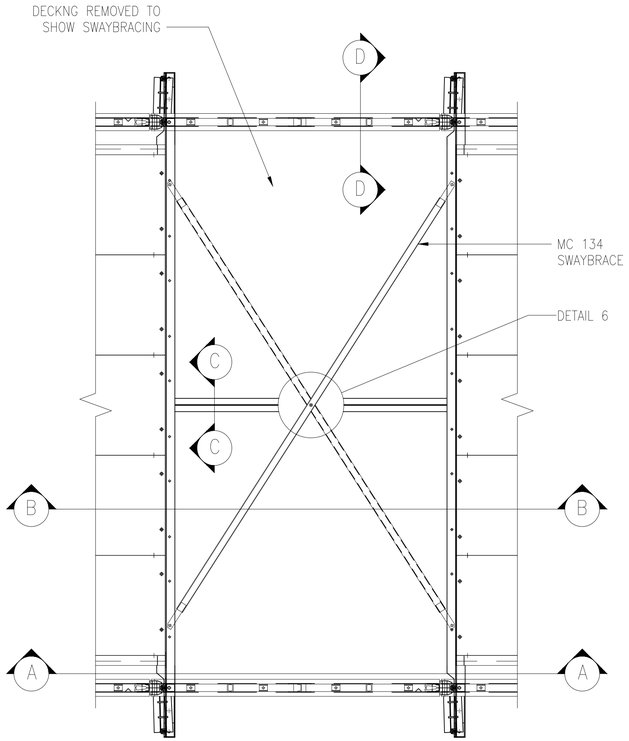

DETAIL 3
PLAN AT SWAYBRACING

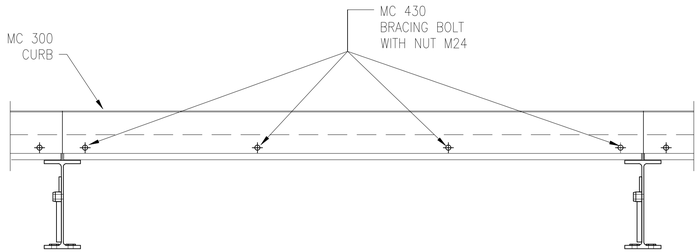

SECTION A–A

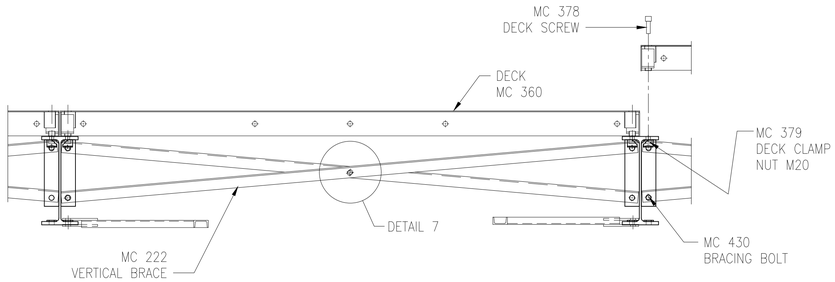

SECTION B–B

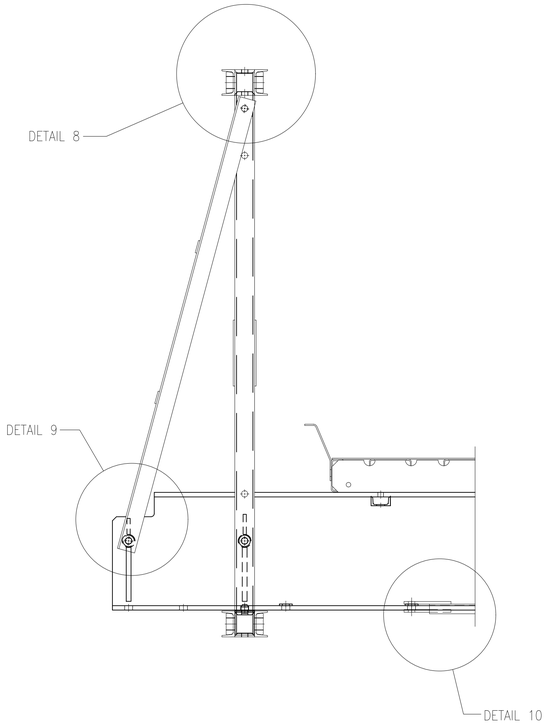

SECTION D–D

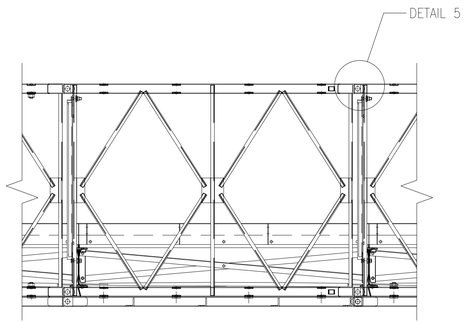

DETAIL 4
PANEL ELEVATION

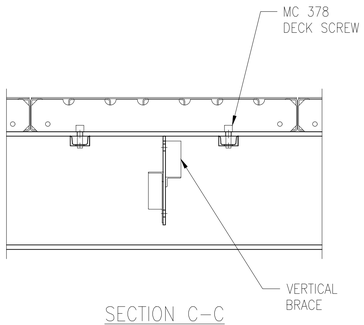

SECTION C–C

DocuSigned by:
0478568A8F2D4...
COMMONWEALTH OF MASSACHUSETTS
DOUGLAS C. BRUNDT
STRUCTURAL
NO. 53636
REGISTERED
PROFESSIONAL ENGINEER
6/29/2018 | 11:37 AM EDT

CONNECTION DETAILS
FOR 4 BAY - C200
17.2' ROADWIDTH
HL93 LIVE LOADING
SSH+ TRUSSES

Client: LUDLOW CONSTRUCTION CO., INC			
Job Name: P0075693		Location: WESTFIELD, MA	
Drawn By: CJ	Date: 6–28–2018		Dwg. No.
Checked By: MR	Date: 6–28–2018		Order no.: BRID–07397–0
Revision		Sheet: 3 OF 7	Scale: Do Not Scale

mabey
enabling global infrastructure
MABEY INC
6770 DORSEY RD. ELKRIDGE, MD. 21075
TEL : 410 379 2800
FAX : 410 379 2801

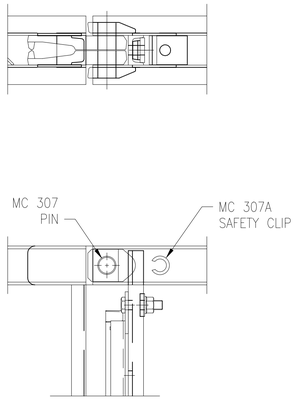

DETAIL 5

PANEL TO PANEL
CONNECTION

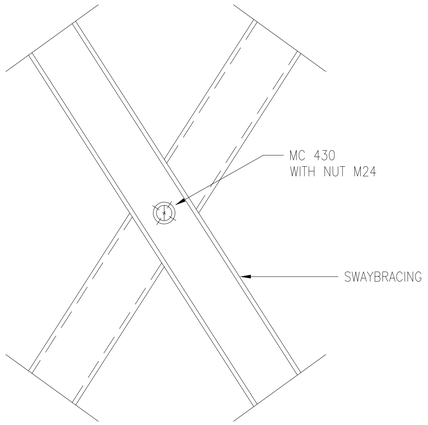

DETAIL 6

SWAYBRACE TO
SWAYBRACE CONNECITON

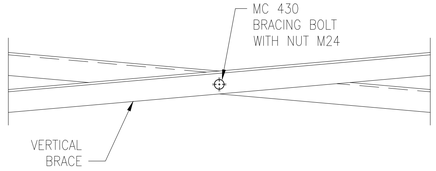

DETAIL 7

VERTICAL BRACE
TO VERTICAL BRACE
CONNECTION

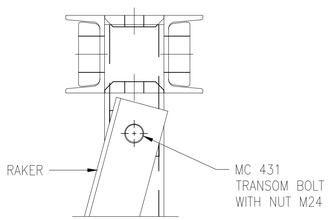

DETAIL 8

RAKER TO PANEL
CONNECTION

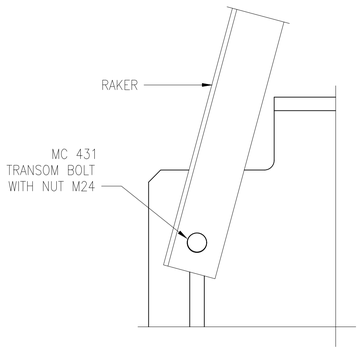

DETAIL 9

RAKER TO TRANSOM
CONNECTION

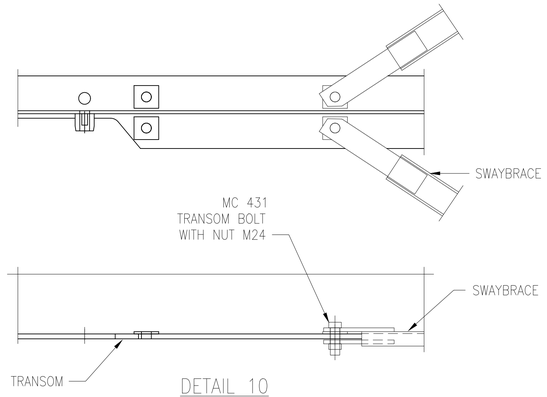

DETAIL 10

SWAYBRACE TO
TRANSOM
CONNECTION

DocuSigned by:
0478568A8F2D4...

COMMONWEALTH OF MASSACHUSETTS
DOUGLAS C. BRUNOT
STRUCTURAL
NO. 53636
REGISTERED
PROFESSIONAL ENGINEER

6/29/2018 | 11:37 AM EDT

CONNECTION DETAILS
FOR 4 BAY - C200
17.2' ROADWIDTH
HL93 LIVE LOADING
SSH+ TRUSSES

Client: LUDLOW CONSTRUCTION CO., INC			
Job Name: P0075693		Location: WESTFIELD, MA	
Drawn By: CJ	Date: 6-28-2018		Dwg. No.
Checked By: MR	Date: 6-28-2018		Order no.: BRID-07397-0
Revision		Sheet: 4 OF 7	Scale: Do Not Scale

mabey
enabling global infrastructure

M A B E Y I N C

6770 DORSEY RD. ELKRIDGE, MD. 21075

TEL : 410 379 2800
FAX : 410 379 2801

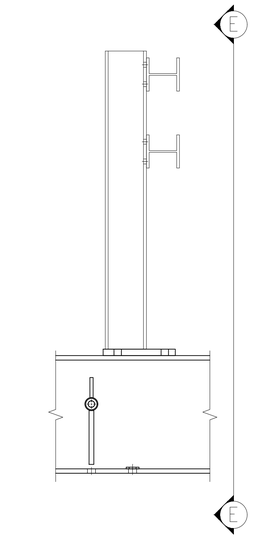

GUARDRAIL POST SIDE VIEW

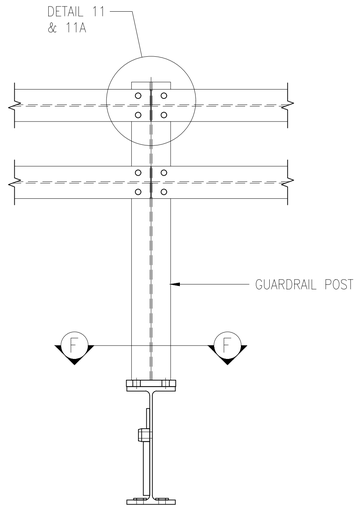

SECTION E–E

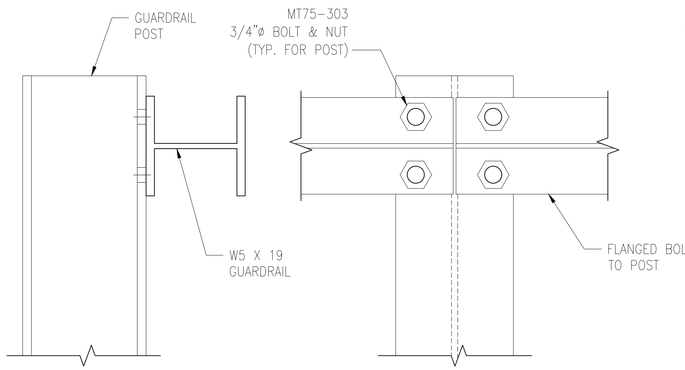

DETAIL 11

END GUARDRAIL TO GUARDRAIL POST CONNECTION

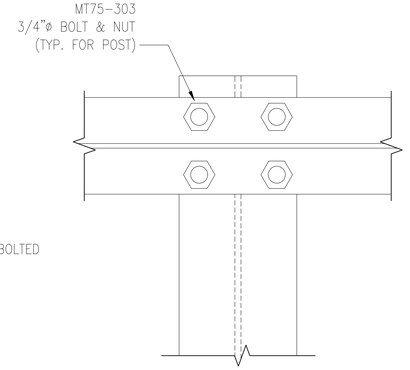

DETAIL 11A

MID–GUARDRAIL TO GUARDRAIL POST CONNECTION FOR 2–BAY RAILS

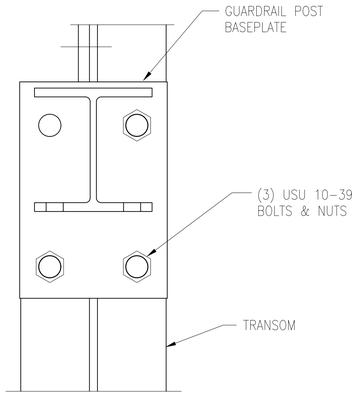

SECTION F–F

GUARDRAIL POST TO TRANSOM CONNECTION

DocuSigned by:
0478568A8F2D4...
COMMONWEALTH OF MASSACHUSETTS
DOUGLAS C BRUNOT
STRUCTURAL
NO. 53636
REGISTERED
PROFESSIONAL ENGINEER
6/29/2018 | 11:37 AM EDT

GUARDRAIL CONNECTION DETAILS FOR 4 BAY - C200 17.2' ROADWIDTH HL93 LIVE LOADING SSH+ TRUSSES

Client: LUDLOW CONSTRUCTION CO., INC			
Job Name: P0075693		Location: WESTFIELD, MA	
Drawn By: CJ	Date: 6–28–2018		Dwg. No.
Checked By: MR	Date: 6–28–2018		Order no.: BRID–07397–0
Revision		Sheet: 5 OF 7	Scale: Do Not Scale

mabey enabling global infrastructure
MABEY INC
6770 DORSEY RD. ELKRIDGE, MD. 21075
TEL : 410 379 2800
FAX : 410 379 2801

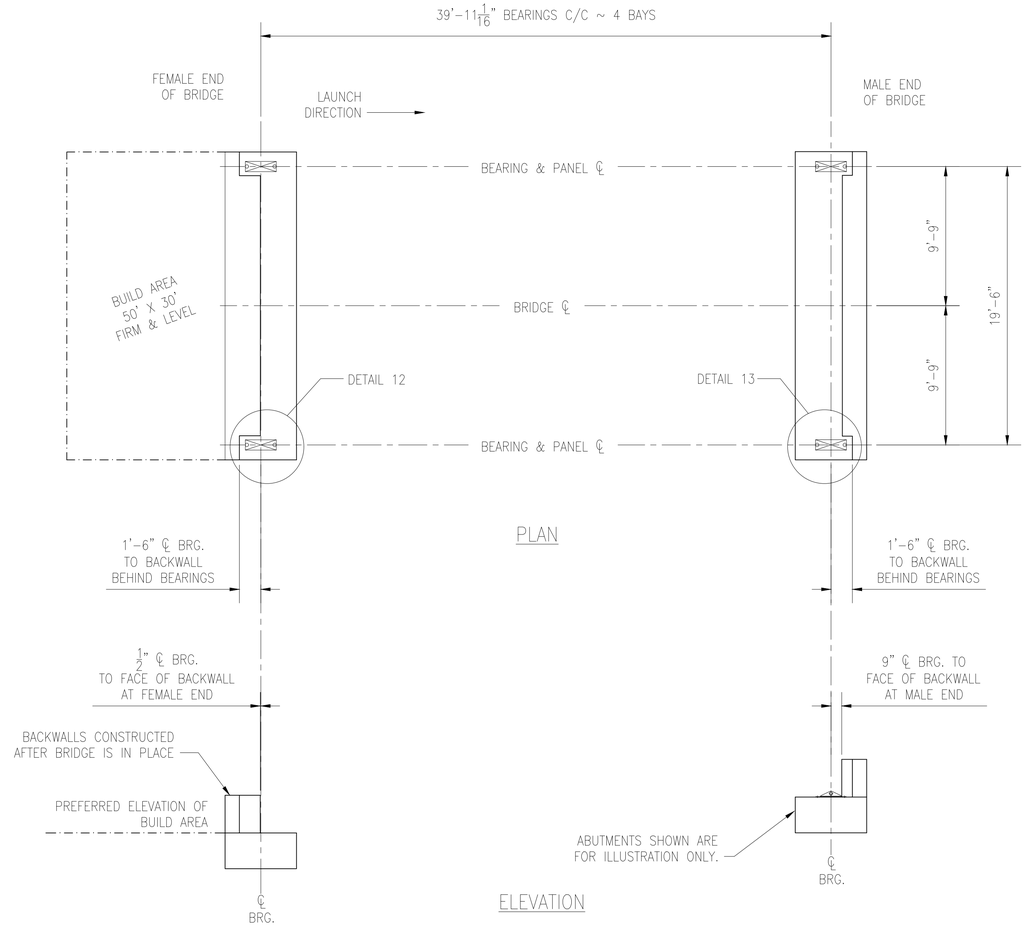

PLAN

ELEVATION

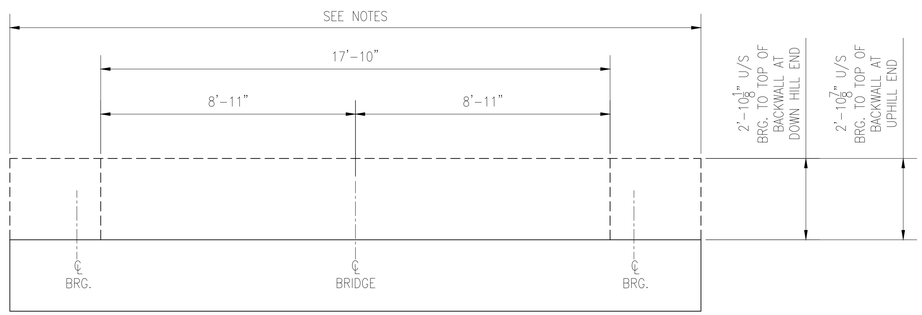

TYPICAL VIEW ON BACKWALL

UNFACTORED CORNER REACTIONS		
	MAX	MIN
DC	10	10
DW	5	5
LL	60	30
TOTAL	75	45

REACTIONS IN KIPS. 1 KIP = 1000 LBS.
LIVE REACTIONS (MAX. AND MIN.) ARE CONCURRENT. LIVE REACTIONS INCLUDE IM AND MP. DIFFERENCE IS DUE TO ECCENTRICITY OF LOADING. EXPOSED AREA OF BRIDGE (FOR CALCULATING WIND LOAD) IS 2.93 FT. PER FT.

NOTES
1. LIVE LOAD IS HL93.
2. ABUTMENTS AND ANCHOR BOLTS BY CONTRACTOR.
3. DUE TO THE NATURE OF MODULAR BRIDGING DIMENSIONAL TOLERANCES CAN ACCUMULATE. MABEY INC. RECOMMENDS THE FOLLOWING:
   A. CONSTRUCT BACKWALLS AFTER BRIDGE IS IN PLACE.
   B. CAST 3" DIA. VOIDS AT ANCHOR BOLT LOCATIONS.
   C. GROUT IN ANCHOR BOLTS AFTER BRIDGE IS IN POSITION.
4. NO DRILLING, WELDING, OR ALTERATIONS OF ANY KIND TO MABEY-SUPPLIED EQUIPMENT WITHOUT WRITTEN PERMISSION OF MABEY INC. ENGINEERING DEPT. EQUIPMENT MUST BE USED IN THE MANNER INTENDED, ACCORDING TO THE SUPPLIED DRAWING(S) AND CALCULATIONS.
5. ALL EXPANSION BEARINGS SHALL BE GREASED AT INSTALLATION.
6. ALL BOLTS SHALL BE SNUG TIGHT.

DocuSigned by: 0478568A8F2D425...
COMMONWEALTH OF MASSACHUSETTS
DOUGLAS C. BRUNOT
STRUCTURAL
NO. 53636
REGISTERED PROFESSIONAL ENGINEER
6/29/2018 | 11:37 AM EDT

GEOMETRIC ABUTMENT LAYOUT FOR 4 BAY - C200 17.2' ROADWIDTH HL93 LIVE LOADING SSH+ TRUSSES

Client: LUDLOW CONSTRUCTION CO., INC			
Job Name: P0075693		Location: WESTFIELD, MA	
Drawn By: CJ	Date: 6-28-2018		Dwg. No.
Checked By: MR	Date: 6-28-2018		Order no.: BRID-07397-0
Revision		Sheet: 6 OF 7	Scale: Do Not Scale

mabey enabling global infrastructure
MABEY INC
6770 DORSEY RD. ELKRIDGE, MD. 21075
TEL : 410 379 2800
FAX : 410 379 2801

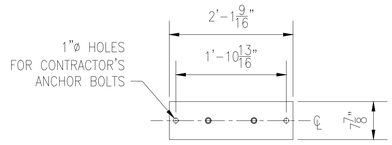

TYP. BEARING BASEPLATE

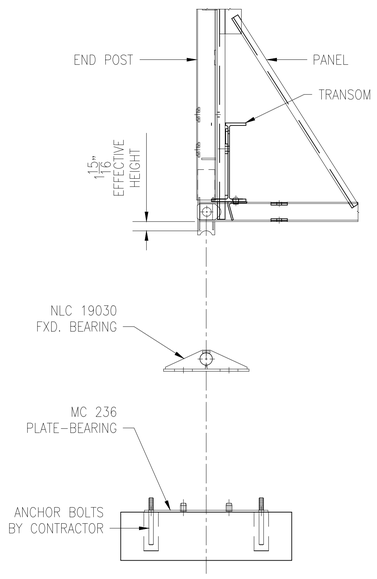

DETAIL 14
FEMALE END OF BRIDGE

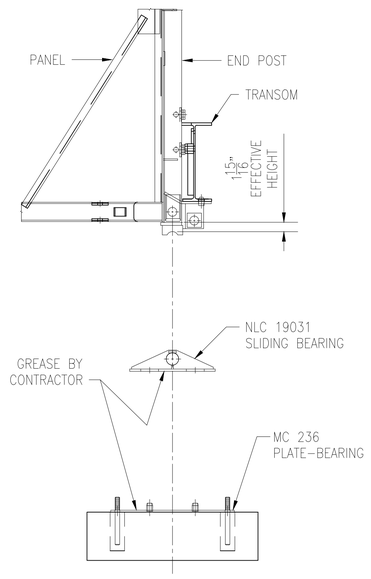

DETAIL 15
MALE END OF BRIDGE

DocuSigned by:
0478568A8F2D4...
COMMONWEALTH OF MASSACHUSETTS
DOUGLAS C. BRUNDT
STRUCTURAL
NO. 53636
REGISTERED
PROFESSIONAL ENGINEER
6/29/2018 | 11:37 AM EDT

BEARING DETAILS
FOR 4 BAY - C200
17.2' ROADWIDTH
HL93 LIVE LOADING
SSH+ TRUSSES

Client: LUDLOW CONSTRUCTION CO., INC			
Job Name: P0075693		Location: WESTFIELD, MA	
Drawn By: CJ	Date: 6-28-2018		Dwg. No.
Checked By: MR	Date: 6-28-2018		Order no.: BRID-07397-0
Revision		Sheet: 7 OF 7	Scale: Do Not Scale

mabey
enabling global infrastructure
M A B E Y I N C
6770 DORSEY RD. ELKRIDGE, MD. 21075
TEL : 410 379 2800
FAX : 410 379 2801

MABEY INC.

6770 DORSEY ROAD
BALTIMORE MD 21075
tel: (410) 379 2800
fax: (410) 379 2801

Ludlow Construction Co., Inc.
40 ft span C200 17.22 ft rw SSH+

ref: BRID-07397-0

Prepared by: MR Date: 27-Jun-18

COMPACT 200 BRIDGING PROOF CALCULATIONS

Mabey ref: BRID-07397-0

CUSTOMER: Ludlow Construction Co., Inc.
LOCATION: Westfield, MA

CONTRACT NUMBER: P0075693

DocuSigned by:
0478568A8F2D425...

COMMONWEALTH OF MASSACHUSETTS
DOUGLAS C. BRUNOT
STRUCTURAL
NO. 53636
REGISTERED PROFESSIONAL ENGINEER

6/29/2018 | 11:37 AM EDT

Bridge Details

BRIDGE TYPE =	C200	
SPAN =	40	ft nom
No. BAYS =	4.0	
WIDTH =	17.22	ft
CONSTRUCTION =	SSH	+
No. LANES =	1	
ASPHALT =	0.25	in (Antiskid Decking)
AASHTO LOADING =	HL-93	
OTHER LOADS =	200	plf (10k Guardrail)

Bridge Section:

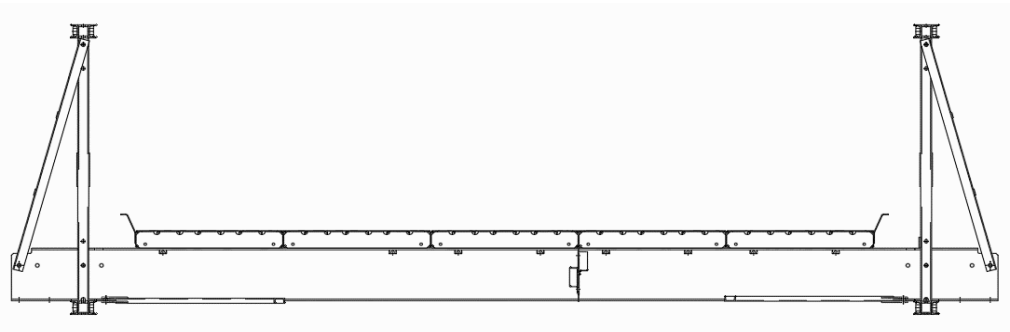

The calculations will show that the bridge will carry the given loads
Applied loads will be compared with allowable loads published by MB&S
Allowable loads and stresses will be checked per AASHTO LRFD

MABEY INC.

6770 DORSEY ROAD
BALTIMORE MD 21075
tel: (410) 379 2800
fax: (410) 379 2801

Ludlow Construction Co., Inc.

40 ft span C200 17.22 ft rw SSH+

ref: BRID-07397-0

Prepared by: MR Date: 27-Jun-18

Application of AASHTO "HL-93" loads

to give maximum Bending Moment in Trusses

Truck Loads

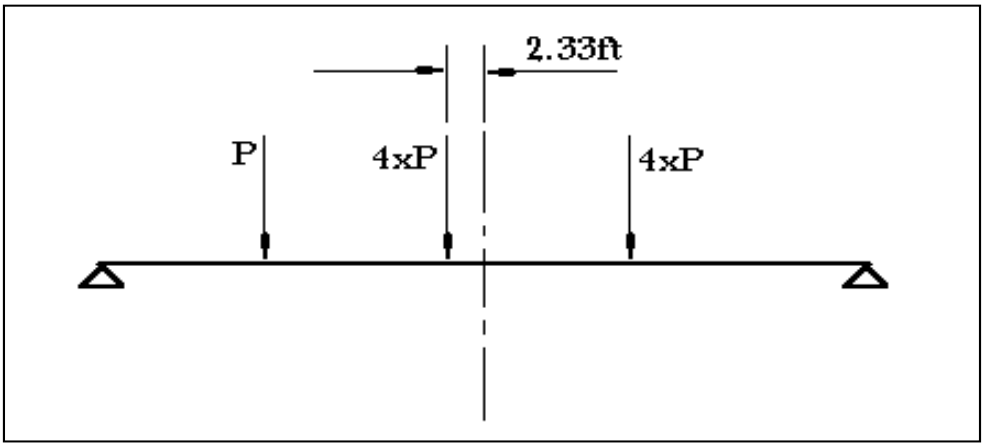

Lane Loads

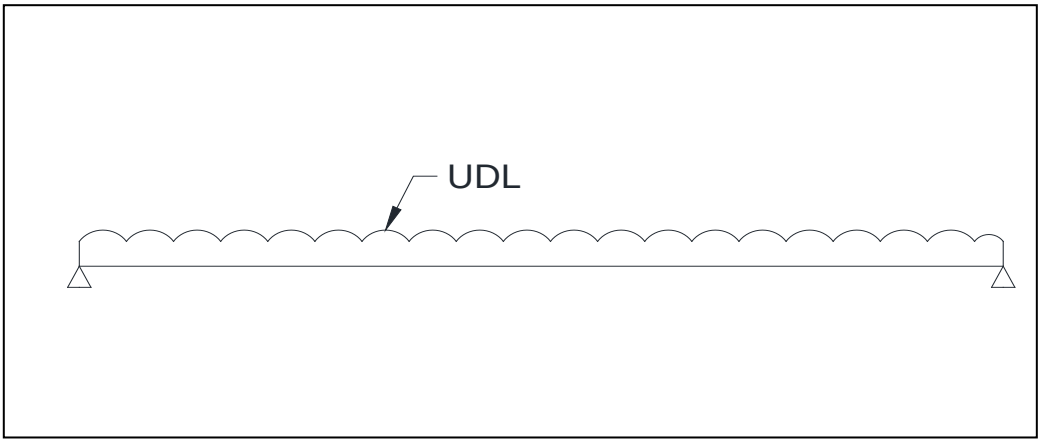

MABEY INC.

6770 DORSEY ROAD
BALTIMORE MD 21075
tel: (410) 379 2800
fax: (410) 379 2801

Ludlow Construction Co., Inc.

40 ft span C200 17.22 ft rw SSH+

ref: BRID-07397-0

Prepared by: MR Date: 27-Jun-18

Application of AASHTO "HL-93" loads

to give maximum Shear Force in Trusses

Truck Loads

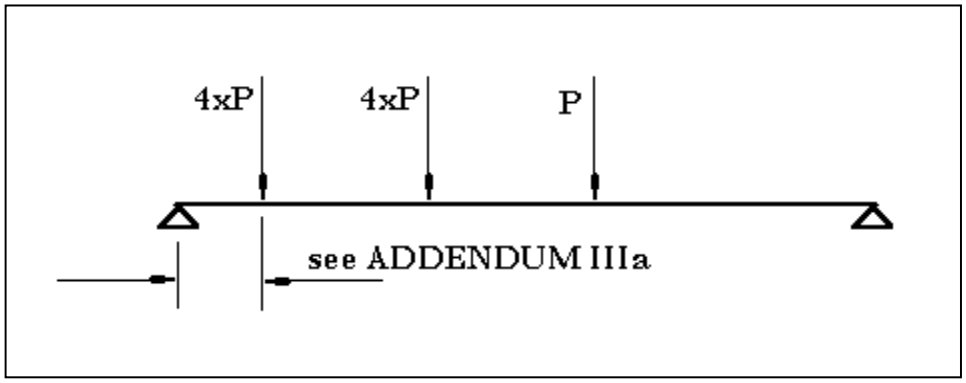

Lane Loads

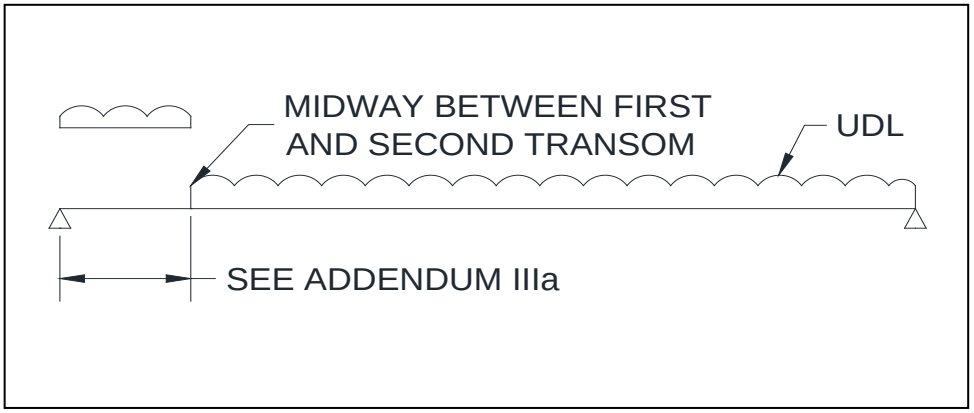

MABEY INC.

6770 DORSEY ROAD
BALTIMORE MD 21075
tel: (410) 379 2800
fax: (410) 379 2801

Ludlow Construction Co., Inc.

40 ft span C200 17.22 ft rw SSH+

ref: BRID-07397-0

Prepared by: MR Date: 27-Jun-18

Mabey Universal Bridging

Span	40	feet			
Trusses	SSH	+	Transoms @	10	feet c/c
Roadway Width	17.22	feet			
No. Lanes	1				
Multiple Presence Factor	1.20	AASHTO LFRD 3.6.1.1.2-1			
Vehicle Design Live Load	HL-93	AASHTO LFRD 3.6.1.2			
Truck	72	kips			
Lane UDL	0.64	klf			
Live Load Factor	1.75	AASHTO LFRD Table 3.4.1-1			

Factored Live Load per LIMIT STATES STRENGTH I - AASHTO LFRD 3.4

Bending	Truck	450.0	k-ft	
	Lane	128.0	k-ft	} single lane only
Shear Force	Truck	37.2	kips	
(see ADDENDUM IIIa)	Lane	9.8	kips	

Impact	33%	AASHTO LFRD 3.6.2
Eccentricity	37.0%	(see ADDENDUM IIIb)

Factored Live Bending Moment	2090	k-ft
Factored Live Shear Force	171	kips

MABEY INC.

6770 DORSEY ROAD
BALTIMORE MD 21075
tel: (410) 379 2800
fax: (410) 379 2801

Ludlow Construction Co., Inc.

40 ft span C200 17.22 ft rw SSH+

ref: BRID-07397-0

Prepared by: MR Date: 27-Jun-18

Factored Dead Load per LIMIT STATES STRENGTH I - AASHTO LFRD 3.4

Self weight	7.41	kips per bay (see ADDENDUM I)		
x	4.0	bays	29.7	kips
Surfacing	0.25	inches thk		
tot weight	2.2	kips		
Guardrail	200	lbs per foot		
tot weight	8.0	kips		
Dead Load factor	1.25			
Surfacing Load factor	1.50			
Total Weight			40	kips
Factored Weight			50	kips
Factored Bending Moment			250	k-ft
Factored Shear			25	kips

Total Factored Loads

Live + Dead

TOTAL FACTORED BENDING MOMENT	2340	k-ft
TOTAL FACTORED SHEAR FORCE	196	kips

MABEY INC.

6770 DORSEY ROAD
BALTIMORE MD 21075
tel: (410) 379 2800
fax: (410) 379 2801

Ludlow Construction Co., Inc.

40 ft span C200 17.22 ft rw SSH+

ref: BRID-07397-0

Prepared by: MR Date: 27-Jun-18

Mabey Bridge & Shore, Inc. Published Truss Capacities
(See ADDENDUM II)

Truss Construction	SSH +		
Allowable BM	3959	k-ft	
Allowable SF	265	kips	High Shear Panels
Factored BM	2340	k-ft	→ 59% of allowable
Factored SF	196	kips	→ 74% of allowable

MABEY INC.

6770 DORSEY ROAD
BALTIMORE MD 21075
tel: (410) 379 2800
fax: (410) 379 2801

Ludlow Construction Co., Inc.

40 ft span C200 17.22 ft rw SSH+

ref: BRID-07397-0

Prepared by: MR Date: 27-Jun-18

Check Shear Force in Bay 2

2nd bay transom @ 20 feet c/c
Trusses SSH +

HL-93 Live Load

Shear Force bay 2 (see ADDENDUM IIIa)	Truck	19.2	kips	}	single lane only
	Lane	3.2	kips		
	Impact	33.0%	AASHTO 3.8.2		
	Eccentricity	37.0%	(see ADDENDUM IIIb)		
	No. Lanes	1			
	Live Load Factor	1.75			

Factored Live Shear Force 69 kips

Dead Loads

Factored weight per bay 12.5 kips 4.0 bays

Factored Dead Shear Force Bay 2 13 kips

Total Shear Loads in Bay 2

Live + Dead
TOTAL FACTORED SHEAR FORCE BAY 2 82 kips

Allowable SF 172 kips → 47% of allowable

MABEY INC.

6770 DORSEY ROAD
BALTIMORE MD 21075
tel: (410) 379 2800
fax: (410) 379 2801

Ludlow Construction Co., Inc.

40 ft span C200 17.22 ft rw SSH+

ref: BRID-07397-0

Prepared by: MR Date: 27-Jun-18

Corner Reactions at Abutments (UNFACTORED).

Dead Loads

UNFACTORED Total Weight of Bridge + Guardrail	37.7	kips	
Reaction at each Corner (UNFACTORED)	9.4	kips	say 10 kips
UNFACTORED Total Weight of Surfacing	2.2	kips	
Reaction at each Corner (UNFACTORED)	0.5	kips	say 5 kips

Live Loads

Reaction	Truck	55.2	kips	single
	Lane	12.8	kips	lane
	No. Lanes	1		only
	Impact	33.0%	AASHTO 3.8.2	
	Eccentricity	37.0%	(see ADDENDUM IIIb)	

Unfactored MAX Reaction at Corner	59.1	kips	say 60 kips
Unfactored MIN Reaction at Corner	27.2	kips	say 30 kips

Unfactored Corner Reactions

	UNFACTORED	
	MAX	MIN
DC	10	10
DW	5	5
LL	60	30
TOTAL	75	45

Note:
All reactions are in kips (1 kip = 1000lbs)
Live Reactions (max. and min.) are concurrent. Difference is due to eccentricity of loading.

MABEY INC.

6770 DORSEY ROAD
BALTIMORE MD 21227
tel: (410) 379 2800
fax: (410) 379 2801

Ludlow Construction Co., Inc.

40 ft span C200 17.22 ft rw SSH+

ref: BRID-07397-0

Prepared by: MR Date: 27-Jun-18

Checking deflection for HL93 Truck loading (3.6.1.3.2)

Deflection due to truck is from 3 point loads at the center of the span

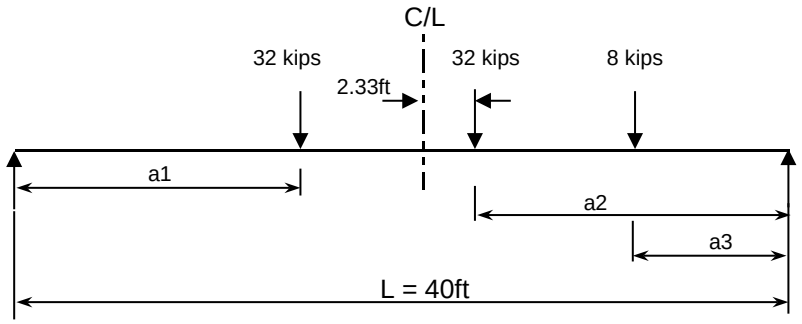

Deflection at center from point load = $\frac{PL^3}{48EI} \times [3a/L - 4(a/L)^3]$

L = 40.0 ft = 480 in

E = 29000 ksi

I = 1531074 cm^4 = 36784.2 in^4 (See ADD IV)

P1 P1 = 32 kips

a1 = 8.33 ft = 100.0 in

Deflection at center = 0.04 in

P2 P2 = 32 kips

a2 = 17.67 ft = 212.0 in

Deflection at center = 0.07 in

P3 P3 = 8 kips

a3 = 3.67 ft = 44.0 in

Deflection at center = 0.00 in

Total Deflection = 0.04 + 0.07 + 0 = 0.11 in

No. of lanes = 1 Eccentricity = 1.37

Impact = 1.33

Total Deflection = No. of lanes x 0.11 x Impact x Eccentricity = 0.2 in

Span / Deflection ratio = 480 / 0.2 = 2400 :1

MABEY INC.

6770 DORSEY ROAD
BALTIMORE MD 21227
tel: (410) 379 2800
fax: (410) 379 2801

Ludlow Construction Co., Inc.

40 ft span C200 17.22 ft rw SSH+

ref: BRID-07397-0

Prepared by: MR Date: 27-Jun-18

Checking deflection for HL93 Lane + 25% Truck Loading (3.6.1.3.2)

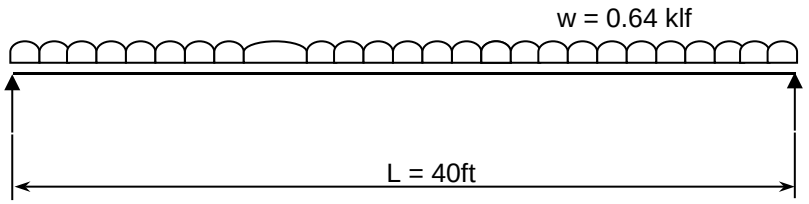

Deflection at center from lane load $W = \frac{5WL^3}{384EI}$ W = Total Load

L = 40.0 ft = 480 in
E = 29000 ksi
I = 1531074 cm^4 = 36784 in^4 (See ADD IV)

Deflection for 1 lane of loading

W = w x L = 26.0 kips

Deflection at center = $\frac{5 \times 26 \times 480^3}{384 \times 29000 \times 36784}$

= 0.04 in (Deflection for 1 lane)

Impact = 1.33 Eccentricity = 1.37
No. of Lanes = 1

Total Lane Load Deflection = No. of Lanes x Impact x Eccentricity x 0.04 = 0.07 in
25% of Truck Load Deflection = 0.05 in
Total Deflection = 0.12 in

Span/deflection ratio = 480 / 0.12 = 4000 :1

MABEY INC.

6770 DORSEY ROAD
BALTIMORE MD 21075
tel: (410) 379 2800
fax: (410) 379 2801

Ludlow Construction Co., Inc.

40 ft span C200 17.22 ft rw SSH+

ref: BRID-07397-0

Prepared by: MR Date: 27-Jun-18

Transom Loads

Section:

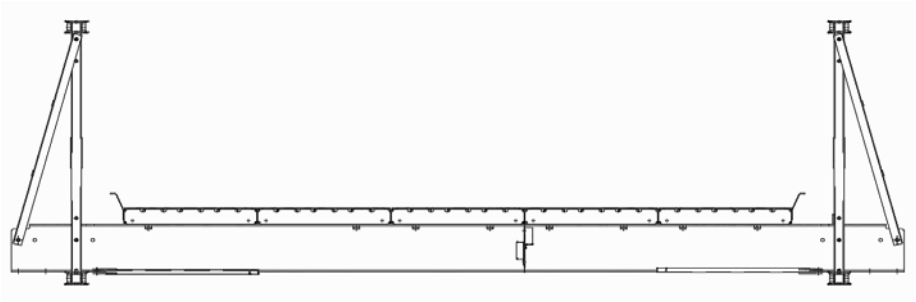

Determine Dead Loading: Transom spacing = 10 ft

Decking: 1050 C200 deck = 0.7077 kips

0.7077 kips x 5 units wide = 3.54 kips

Kerbs: Kerb unit = 0.100 kips

0.1 kips x 2 units = 0.200 kips

Total DL = 3.74 kips (UNFACTORED)

DL Factor 1.25 Total DL = 4.67 kips (FACTORED)

Surfacing:

0.25ins x 17.22ft x 10ft x 150pcf = 0.54 kips (UNFACTORED)

Surfacing Load Factor 1.50 0.81 kips (FACTORED)

Transom:

Transom is a USC18-02 (W18 X 60) Length = 23.5ft

Transom Self Wt = 1.41 kips (UNFACTORED)

DL Factor 1.25 1.76 kips (FACTORED)

TRANSOM DESIGN (BENDING ONLY)
POINT LOADS (AXLES) ON SIMPLY SUPPORTED BEAM
TRANSOM & DECKING MUST BE SYMMETRICAL

ref #:	BRID-07397-0
Prepared By:	MR
Date:	27-Jun-18

1 LANE			
L1 =	19.50	feet	truss c/c
L2 =	17.22	feet	deck width
L3 =	6.00	feet	wheel c/c
L4 =	8.25	feet	
L5 =	7.11	feet	
W1 =	1.76	kips	weight of Transom (FACTORED)
W2 =	5.48	kips	weight of decking + guardrail + surfacing (FACTORED)
P1 =	102.82	kips	Truck with Impact + Lane Load = (32kips x 1.33 x 1.75 x 1.2) + (0.64 k/ft x 7.38ft x 1.75 x 1.2) (FACTORED)
	or		
P2 =	125.16	kips (Governs)	Tandem with Impact + Lane Load = (40kips x 1.33 x 1.75 x 1.2) + (0.64 k/ft x 10ft x 1.75 x 1.2) (FACTORED)
BMx(W1) =	4.19	kips.ft	
BMx(W2) =	14.57	kips.ft	
BMx(P) =	436.86	kips.ft	
BM(tot) =	455.62	kips.ft	
Gr. steel =	50	ksi	
% of yield =	100	%	
f(b) =	50.00	ksi	

Section Modulus required
Sx = 109.3 cu.ins

Section Modulus Provided = 108 cu.ins
1.25 % over, say OK

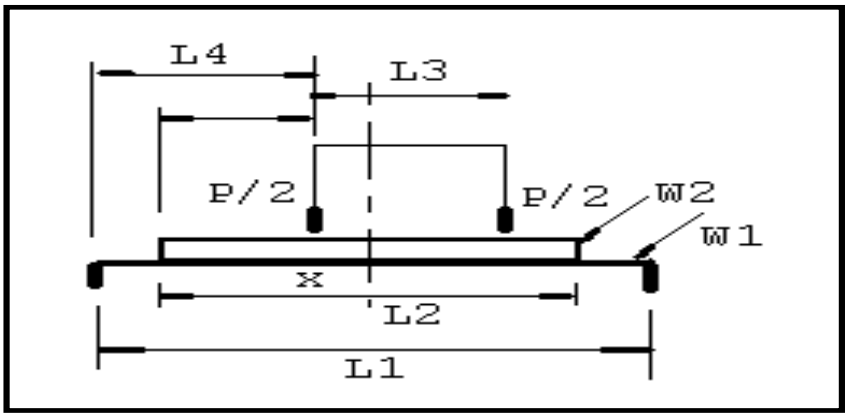

Tandem Load

Axle load due to tandem load and the use of 10ft decks.
Max Transom load on center transom from 2 axles of tandem is as follows:-
= 25k + (25k * (6ft / 10ft))

40.00 kips

Mabey Compact 200 Bridging
1050mm Trough Decks

ref #:	BRID-07397-0
Prepared By:	MR
Date:	27-Jun-18

Side "C" Section (2 qty)		Trough "U" Section (3 qty)		Checker Plate	
T1	5.0 mm	T2	4.0 mm	T3	4.8 mm
return = 50mm		width = 165mm			
D	127.0 mm	(depth of "U" & "C" section)			
A1	1135 mm^2	A2	1676 mm^2	A3	5040 mm^2
I1	2870139	y-bar	39	I3	9677
		I2	2879730		

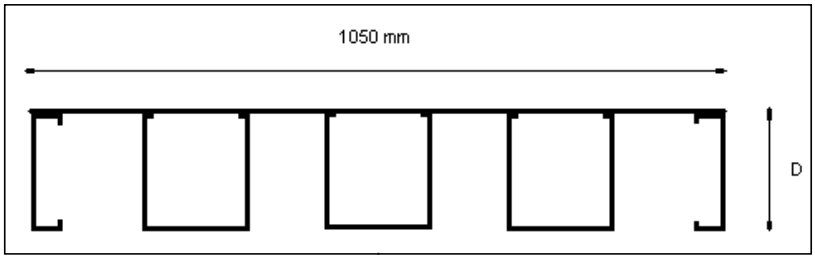

TOTAL SECTION

Y-bar		**80.6** mm	**3.17**	in
Ixx		**35639185** mm^4	**85.6**	in^4
Sx	top	**695402** mm^3	**42.4**	in^3
	bottom	**442447** mm^3	**27.0**	in^3

Top Section Gr. 50

BM Capacity = 2122 k-in

Bottom Section Gr. 65

BM Capacity = 1755 k-in

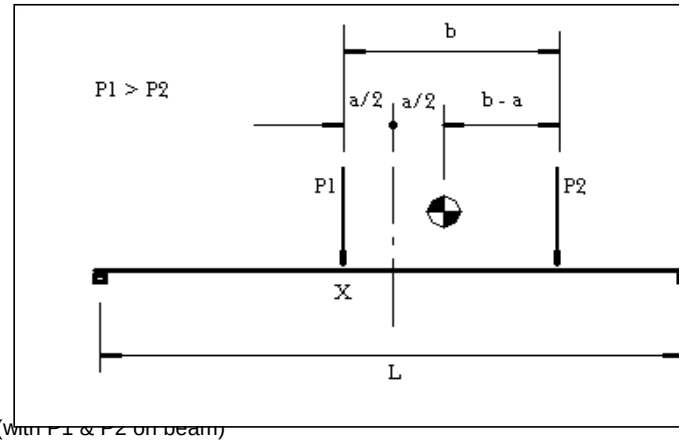

HL93 TANDEM

L =	10	ft
P1 =	12.5	kips
P2 =	12.5	kips
b =	4	ft
a =	**2.00**	ft
Mx =	**40.00**	k-ft BM under Point Load P1 (with P1 & P2 on beam)
Mc =	**31.25**	k-ft BM under single Point Load P1

HL93 TANDEM => {[(40 x 12) x 1.33] + (0.64 x 10^2 / 8)} x 1.75 x 12 x 1.2(M P) = 1357 k-in < 1755k-in, OK

HL93 => {[(32 kips/ 2 x 10 / 4) x 1.33] + (0.64 x 10^2 / 8)} x 1.75 x 12 x 1.2(M P) = 1542 k-in < 1755k-in, OK

COMPACT 200 SUPER - BRIDGE DESIGN BAY WEIGHTS

STEEL DECKED ROADWAY

Truss Construction	STANDARD 10.33 ft (3.15m)		17.22ft Roadway		2 LANE (HS20) 24.1ft (7.35m)		2 LANE (MS250) 24.1ft (7.35m)	
	Decked	Undecked	Decked	Undecked	Decked	Undecked	Decked	Undecked
SSH	**5.42**	**3.05**	**7.41**	**3.54**	**10.23**	**4.92**	**10.73**	**5.42**
SSHN	**5.82**	**3.45**	**7.81**	**3.94**	**10.62**	**5.32**	**11.12**	**5.82**
SSHNH	**5.89**	**3.53**	**7.89**	**4.01**	**10.70**	**5.39**	**11.20**	**5.89**
SSHR	**6.22**	**3.85**	**8.21**	**4.34**	**11.02**	**5.71**	**11.52**	**6.21**
SSHRH	**6.37**	**4.00**	**8.36**	**4.49**	**11.17**	**5.87**	**11.67**	**6.37**
DSH	**7.23**	**4.86**	**9.22**	**5.35**	**12.03**	**6.72**	**12.53**	**7.22**
DSHN1	**7.62**	**5.25**	**9.61**	**5.74**	**12.42**	**7.12**	**12.93**	**7.62**
DSHN1H	**7.70**	**5.33**	**9.69**	**5.82**	**12.50**	**7.19**	**13.00**	**7.69**
DSHR1	**8.01**	**5.65**	**10.01**	**6.13**	**12.82**	**7.51**	**13.32**	**8.01**
DSHR1H	**8.17**	**5.80**	**10.16**	**6.28**	**12.97**	**7.66**	**13.47**	**8.16**
DSHN2	**8.01**	**5.65**	**10.01**	**6.13**	**12.82**	**7.51**	**13.32**	**8.01**
DSHN2H	**8.16**	**5.80**	**10.16**	**6.28**	**12.97**	**7.66**	**13.47**	**8.16**
DSHR2	**8.80**	**6.43**	**10.80**	**6.92**	**13.61**	**8.30**	**14.11**	**8.80**
DSHR2H	**9.10**	**6.73**	**11.10**	**7.22**	**13.91**	**8.60**	**14.41**	**9.10**
TSH	**8.71**	**6.34**	**10.70**	**6.83**	**13.51**	**8.20**	**14.01**	**8.70**
TSHN2	**9.50**	**7.13**	**11.49**	**7.62**	**14.30**	**9.00**	**14.80**	**9.50**
TSHN2H	**9.65**	**7.28**	**11.64**	**7.77**	**14.45**	**9.15**	**14.95**	**9.65**
TSHR2	**10.29**	**7.93**	**12.29**	**8.41**	**15.10**	**9.79**	**15.60**	**10.29**
TSHR2H	**10.59**	**8.23**	**12.59**	**8.71**	**15.40**	**10.09**	**15.90**	**10.59**
TSHN3	**9.90**	**7.53**	**11.89**	**8.02**	**14.70**	**9.40**	**15.20**	**9.90**
TSHN3H	**10.12**	**7.76**	**12.12**	**8.24**	**14.93**	**9.62**	**15.43**	**10.12**
TSHR3	**11.09**	**8.72**	**13.08**	**9.21**	**15.89**	**10.59**	**16.39**	**11.09**
TSHR3H	**11.54**	**9.17**	**13.54**	**9.66**	**16.35**	**11.04**	**16.85**	**11.54**

TABLE A	
TRUSSES	kips
SSH	2.23
SSHN	2.63
SSHNH	2.70
SSHR	3.02
SSHRH	3.18
DSH	4.03
DSHN1	4.43
DSHN1H	4.50
DSHR1	4.82
DSHR1H	4.97
DSHN2	4.82
DSHN2H	4.97
DSHR2	5.61
DSHR2H	5.91
TSH	5.51
TSHN2	6.31
TSHN2H	6.46
TSHR2	7.10
TSHR2H	7.40
TSHN3	6.70
TSHN3H	6.93
TSHR3	7.90
TSHR3H	8.35

1050 Decks			
STD	17.22	TWO LANE	
TABLE B			
3.19	5.19	8.00	8.50
TABLE C			
2.37	3.88	5.31	5.31

Decked = Table A + Table B
Undecked = Table A + Table B - Table C

NOTES
All Weights are in kips (1 kip = 1000lbs)
The weights tabulated are per 10ft (3.048m) long bay and are based upon the theoretical component weight with an allowance of 2.5% for finishes to the steelwork.
The final bay at either end of a bridge is always unreinforced, even when the bridge is of reinforced construction.

MABEY COMPACT BRIDGING
MAXIMUM ALLOWABLE LOADS IN TRUSSES

Truss Construction	Bending Moment kip.ft	Shear Force (Standard Panels) kips	Shear Force (H.S. Panels) kips
SSH	3,959	172	265
SSHR	7,072	172	265
SSHRH	7,980	172	265
DSH	7,980	340	530
DSHR1	11,438	257	400
DSHR1H	12,347	257	400
DSHR2	14,892	340	530
DSHR2H	16,725	340	530
TSH	11,915	512	796
TSHR2	18,115	430	665
TSHR2H	19,859	430	665
TSHR3	21,226	512	796
TSHR3H	23,943	512	796
QSH	15,876	685	1,064
QSHR3	25,136	600	933
QSHR3H	27,892	600	933
QSHR4	28,433	685	1,064
QSHR4H	31,924	685	1,064

NOTES

1. The Moment and Shear properties tabulated are consistent with a resistance factor of 1.0
2. The Shear properties tabulated take account of any maldistribution of load between the panel lines due to differential stiffenesses within the trusses (DSHR1, TSHR2H, etc.).
3. These proporties are calculated for worst case situations. In certain circumstances increases in these properties may be possible but only on the express written approval of Mabey engineers.

For maximum shear force, the position of the load for maximum effect is not at the end of the span (i.e. directly over the end transom) but rather as explained below:

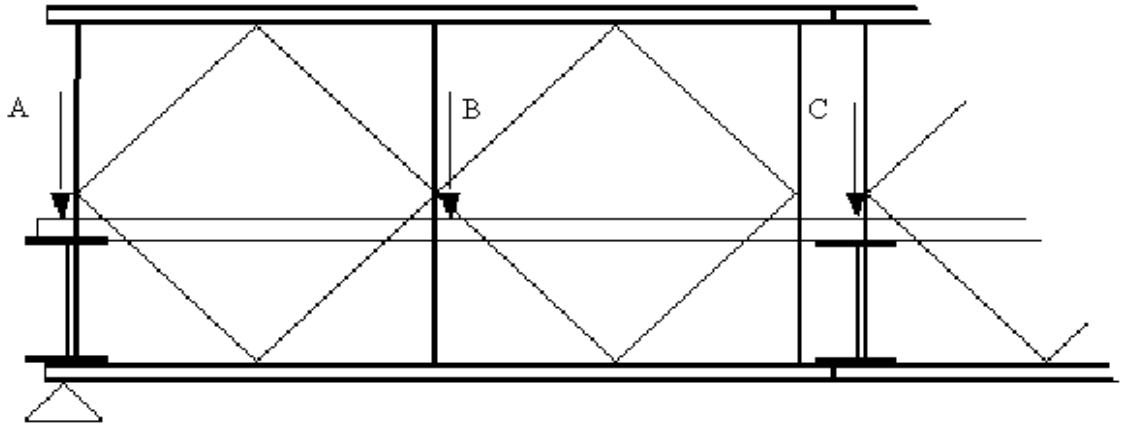

With the load at position A (directly over the end transom - position for maximum end reaction), all of the load is transferred directly to the bearing through the transom.

With the load at position B (on the decking between the end and the first transom), part of the load is transferred directly to the bearing through the end transom and part to the truss through the first transom.

With the load at position C (directly over the first transom - 10ft from the end in standard configuration), all of the load is transferred through the truss, and this is therefore the position for maximum shear force.

Mabey Compact Bridging
Eccentricity Factors

The loads in each truss are increased
to allow for the eccentricity of the live load in the roadway

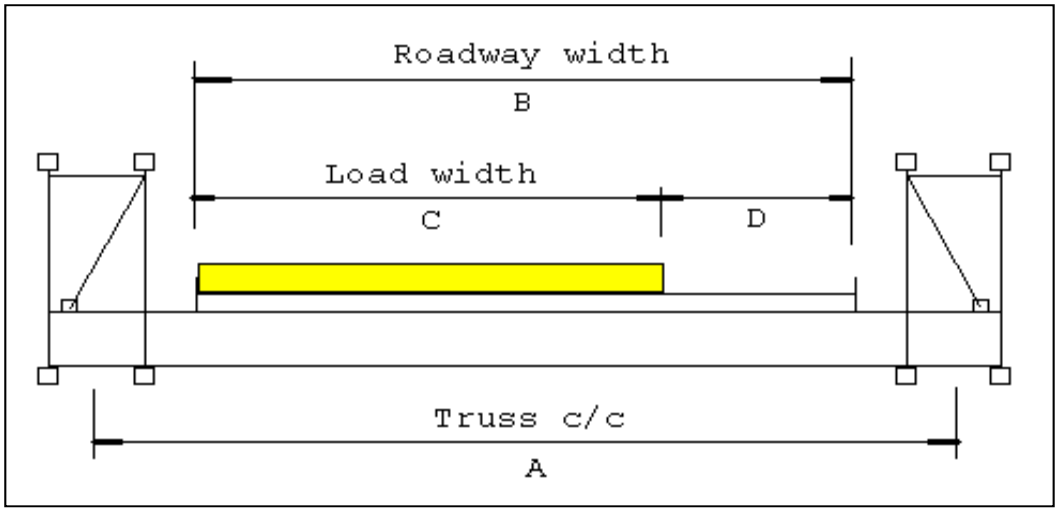

$$\text{eccentricity factor (e)} = \frac{(A + B - C)}{A} \longrightarrow \frac{(A + D)}{A}$$

A =	**19.50**	**ft**
B =	**17.22**	**ft**
C =	**10**	**ft**
D =	**7.22**	**ft**

Eccentricity = $\frac{(19.5 + 7.22)}{19.5}$ **= 1.37**

COMPACT 200 - Properties

Constr.	PUBLISHED FIGURES ABM kip.ft	ASF(std) kips	ASF(h.s.) kips	INERTIAS (CM^4)	COEFFICIENTS OF SAG ("d")	SHEAR DEFLECTION U.D.L. ("Xsu")	COEFFICIENTS POINT ("Xsp")
SS	1845	101	156	1211192	2.4424	879	1099
SSH	2329	101	156	1531074	2.4424	1111	1389
SSR	3696	101	156	2664688	2.23	1933	2417
SSHR	4160	101	156	2984570	2.23	2165	2707
SSRH	4224	101	156	3048612	2.23	2212	2765
SSHRH	4694	101	156	3368494	2.23	2444	3055
DS	4130	200	312	2422384	2.4424	879	1099
DSH	4694	200	312	3062148	2.4424	1111	1389
DSR1	6394	151	235	3875880	2.3362	1604	2005
DSHR1	6728	151	235	4515644	2.3362	1808	2260
DSR1H	6995	151	235	4259804	2.3362	1833	2291
DSHR1H	7263	151	235	4899568	2.3362	2027	2534
DSR2	8659	200	312	5329376	2.23	1933	2417
DSHR2	8760	200	312	5969140	2.23	2165	2707
DSR2H	9852	200	312	6097224	2.23	2212	2765
DSHR2H	9838	200	312	6736988	2.23	2444	3055
TS	5541	301	468	3633576	2.4424	879	1099
TSH	7009	301	468	4593222	2.4424	1111	1389
TSR2	9245	253	391	6540568	2.3008	1738	2173
TSHR2	10656	253	391	7500214	2.3008	1950	2438
TSR2H	10272	253	391	7308416	2.3008	1991	2489
TSHR2H	11682	253	391	8268062	2.3008	2197	2747
TSR3	11089	301	468	7994064	2.23	1933	2417
TSHR3	12486	301	468	8953710	2.23	2165	2707
TSR3H	12673	301	468	9145836	2.23	2122	2765
TSHR3H	14084	301	468	10105482	2.23	2444	3055

mabey
enabling global infrastructure

BRID-07397-0
Ludlow Constr., Inc.
Westfield, MA

BRIDGE PARTS LIST.

BRID-07397-0 **4 BAY SSH 17.22FT**	BRIDGE	38452
	L & E	0
	No TRKS	0.9

MARK No	DESCRIPTION	BRIDGE 38452	L & E 0	UNIT WT
NLC19030	BEARING-SINGLE - Fixed	2		40.0
NLC19031	BEARING-SINGLE - Sliding	2		40.0
MC134	SWAYBRACE-EW	8		92.2
MC222	BRACE-VERTICAL	8		38.0
MC236	PLATE-BEARING	4		23.6
MC300	KERB	8		78.8
MC304	CHORD REINF.-HEAVY	0		228.8
MC307	PIN-PANEL	24		5.9
MC307a	CLIP-SAFETY	48		0.02
MC317	POST-END-MALE	2		169.1
MC318	POST-END-FEMALE	2		194.6
MC360B	DECK-1050 - ANTISKID	20		837.4
MC363	FILLER-EOB-3.15M	2		111.4
USC10-09	FILLER-EOB-2.10M	2		80.0
MC411	PANEL-SUPER	4		741.3
MC412	PANEL-SUPER-H.S.	4		857.2
MC430	BOLT-BRACING-SHORT	120		0.6
MC431	BOLT-TRANSOM	38		1.1
MC433	BOLT-CHORD-SHORT	0		1.5
MC436	NUT-FLANGED-M24	158		0.3
MC378	SCREW-DECK CLAMP-(DRI-LOCK)	100		0.6
MC379	NUT-DECK CLAMP-M20	100		0.3
USC18-02	TRANSOM-5.15	5		1410.0
MC458	RAKER-RSA-457/406	6		72.1
MC459	RAKER-RSA-730/406			69.1
MC460	RAKER-RSA-730/610			42.8
MU87	BEARING-BASEPLATE-FIXED			80.9
NLC9208	BEARING TRUSS-COMPACT			59.9
NLC11155	BEARING-SLIDING-COMPACT			157.6
NLC11077	BEARING BEAM - TPO			60.0
MC66	LINK-LAUNCH			31.6
BB58	ROLLER-PLAIN			113.2
BB59	ROLLER-ROCKING			214.2
MC263	FRAME-JACKING			87.7
USC15-10	GR POST	10		125.0
USC15-08	GR RAIL - 2 BAYS	8		380.0
MT75-303	GR BOLTS (3/4" BOLT + NUT) RAIL TO POST	64		1.0
USU10-38	GR POST BOLTS (BASEPLATE TO TRANS)	30		1

Notes

1 prepared by MR
2 Items in RED may need to be fabricated.

mabey
enabling global infrastructure

BRID-07397-0

Ludlow Constr., Inc.

Westfield, MA

BRIDGE LAUNCH & ERECTION SCHEME

MABEY INC.

SUGGESTED LIST OF TOOLS FOR THE INSTALLATION OF THE MABEY COMPACT-200 BRIDGE

i. 36mm (1 7/16") spud wrenches

ii. 36mm (1 7/16") impact sockets (3/4" drive) (Bracing and Transom Bolts)

iii. ratchet (3/4", 1/2” drive)

iv 16mm (5/8") hex. bar (6" long) and socket - 3/4" drive (for fitting Decks)

iv. adjustable crescent wrench

v. 7 lb. sledge hammer

vi. tie wire, pliers

vii. prybar

ix. cable winch (come-along min. 4000lb cap.)

x. 4 way cables (min. 10ft long; 1000lb cap. each cable) - for placing decks

xi. 2 - cables/straps (min. 10ft long; min 10,000lb cap. each)

xii. claw hammer and 4" nails

xiii. compressor and adequate hose (optional - bolts can be hand tightened)

xiv. impact air guns (3/4" drive) (see xiii above)

xv. rough cut saw (preferably chain saw)

xvi. timber for cribbing (2"x4", 4"x4", 6"x6", etc.)

xvii. launching rollers (if required provided by MBSI)

xvii crane and rigging, or jacks, for final positioning-as required (details upon request)

Due to the nature of steel modular bridges, the following tools, etc. may be desirable.

i. oxy-acetylene burning equipment

ii. bridge reamer - 1"

iii. steel grinder

iv. 25mm (1") drift pin

SITE CONDITIONS AND/OR CERTAIN APPLICATIONS OF THE EQUIPMENT MAY REQUIRE MODIFICATION TO A PROCEDURE

NO PROCEDURE SHOULD BE UNDERTAKEN WITHOUT DUE CONSIDERATION TO THE SAFETY OF PERSONELL, PROPERTY, AND EQUIPMENT

Bridge Installation By Lift–In Method : 4 Way (One Crane)

Procedure: (The Design Engineer determines the Weight of structure and pick points. A method statement should be prepared detailing the locations of the bridge and crane during the pick, size of crane required, and swing radius. Also, consider any overhead utilities, trees, or other obstructions particular to the site.)

a, Build the bridge in a convenient staging area. The decking is left off to reduce the pick weight, but all other components should be installed and the bolts fully tightened. Rig the bridge at the determined pick points, incorporatein the requred timber (typ.)softeners. When the rigging is properly attached, lift the structure and set it on its bearings in its final location.

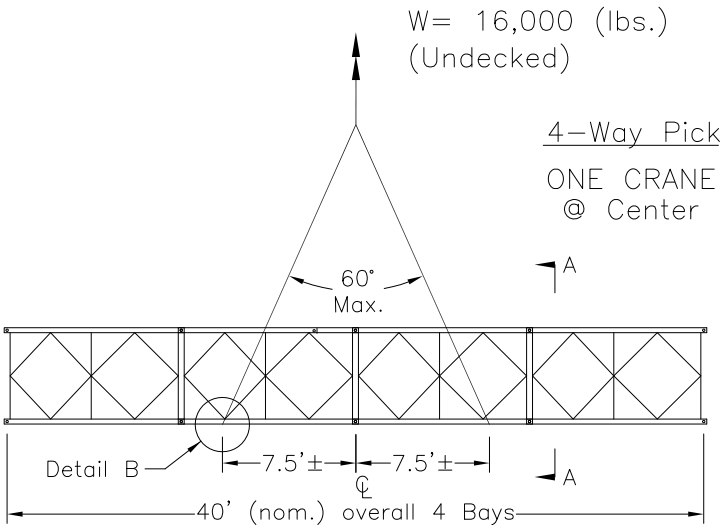

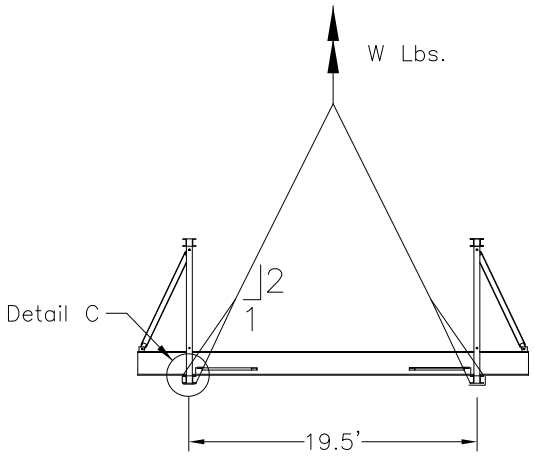

Section A–A

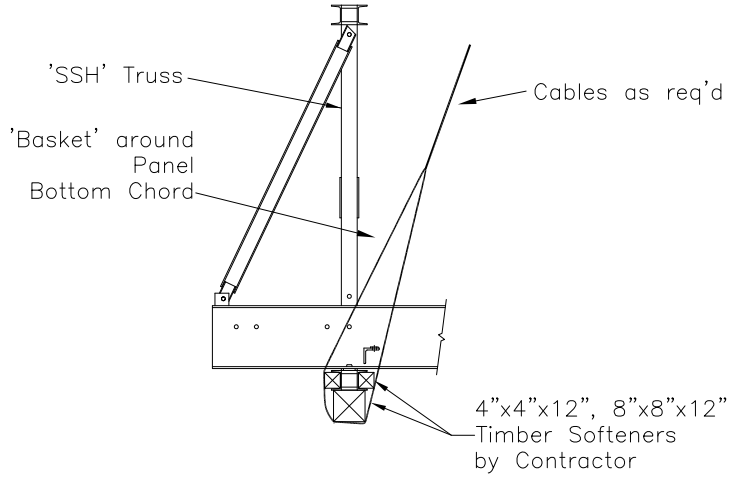

Detail C
Timber Softeners

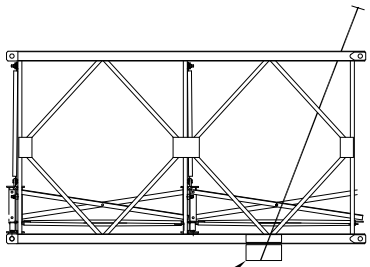

Detail B

MABEY UNIVERSAL

mabey

MABEY INC.
6770 DORSEY RD.
ELKRIDGE, MD 21075

PH. (410) 379-2800
OR 1-800-42 "MABEY"
FAX (410) 379-2801

BRID-07397-0 - UNDECKED BRIDGE WEIGHT
4 BAY SSH 17.22FT

BRIDGE	15866
L & E	0
No TRKS	0.4

MARK No	DESCRIPTION	BRIDGE 15866	L & E 0	UNIT WT
NLC19030	BEARING-SINGLE - Fixed			40.0
NLC19031	BEARING-SINGLE - Sliding			40.0
MC134	SWAYBRACE-EW	8		92.2
MC222	BRACE-VERTICAL	8		38.0
MC236	PLATE-BEARING			23.6
MC300	KERB			78.8
MC304	CHORD REINF.-HEAVY	0		228.8
MC307	PIN-PANEL	24		5.9
MC307a	CLIP-SAFETY	48		0.02
MC317	POST-END-MALE	2		169.1
MC318	POST-END-FEMALE	2		194.6
MC360B	DECK-1050 - ANTISKID			837.4
MC363	FILLER-EOB-3.15M			111.4
USC10-09	FILLER-EOB-2.10M			80.0
MC411	PANEL-SUPER	4		741.3
MC412	PANEL-SUPER-H.S.	4		857.2
MC430	BOLT-BRACING-SHORT	24		0.6
MC431	BOLT-TRANSOM	38		1.1
MC433	BOLT-CHORD-SHORT	0		1.5
MC436	NUT-FLANGED-M24	62		0.3
MC378	SCREW-DECK CLAMP-(DRI-LOCK)	0		0.6
MC379	NUT-DECK CLAMP-M20	0		0.3
USC18-02	TRANSOM-5.15	5		1410.0
MC458	RAKER-RSA-457/406	6		72.1

Notes

1 prepared by MR
2 Items in RED need to be fabricated.

Compact 200 Typical Connection Details

–BD–00 Unloading and Loading Trucks.

–BD–01 Site Preparation.

–BD–02 19 bay Launch Configuration to Show Typical Details.

–SC–00 First Panels.

–SC–01 Lower Bracing Frame Panel / Transom Connections.

–SC–02F Female End of Bridge Connections.

–SC–02M Male End of Bridge Connections.

–SC–03 Panel to Panel Connection.

–SC–04 Reinforcing Chord Connection.

–SC–05 Horizontal Bracing Frame Connections.

–SC–06 Sway & Vertical Brace Connections.

–SC–06C2 Swaybrace Connections C, C1, D, D1

–SC–08 Bearing Details.

–SC–09 Roller Details.

–SC–10 Double Storey Panel Connections.

–SC–11 Upper Storey Vertical Frame Connection.

–SC–12 Raker–Launch 730/610 Connection.

–SC–13 Launch Link Connection.

–SC–13–A Launch Swaybrace Connection.

–SC–15 Jacking Frame Connection.

BD–00

Unloading and Loading Trucks

i, Procedure: (A Trucking List is prepared which details the quantities and weights of the equipment on each Truck. Mabey equipment is delivered to and from site on flatbeds or trans–oceanic containers. The typical maximum load is 20 tonne. Loading and unloading times average 2–4 hrs. per truck.

a, Unloading: (Unload Trucks immediately upon arrival unless otherwise arranged.)
Store all equipment on timber dunnage. Stack identical components to save space.
Position Rollers, Bracing, and Hardware alongside and near the front of the Build Area
Store Panels, Transoms, and Reinforcing Chords adjacent to the Build Area.
Store Decking and Curbs remote from the Build Area.

b, Loading: (Before Trucks arrive on–site, plan the arrangement of equipment on each truck.)
Fully disassemble and pre–stack individual items according to the Trucking List.
Band all bracing, and pack small components (bearings, bolts, etc.) in Crates or Drums.
Load heaviest items first, then place lighter items above or between heavy items.
All equipment loaded on the truck must be on timber dunnage for unloading by Forklift.
All equipment must be stable, secured, and safely tied down for highway travel.

>>Typical Tools Checklist:
for assembly and disassembly
of Mabey Compact 200 Bridging

_ Excavator or small crane – picks 7 tonne at 8m
_ Rigging (4–way, 2–way, cables, straps, etc.)
_ Timber for temporary cribbing (100mm sq., 200mm sq. typ.)
_ Rough–cut saw (chainsaw)
_ Claw hammer and nails
_ Tin snips/band cutters, Banding equip. for loading
_ Adjustable crescent wrench
_ Level
_ 2 tonne Cable Winch/Chain Binder
_ 36mm Sockets, Spuds (fits Bracing, Transom Bolts)
_ Sledgehammer(s)
_ Tie–wire
_ Jack(s) as req'd (20–100 tonne typ.)
_ Impact guns
_ Air compressor
_ 16mm 'Allen' socket (fits Deck Screws)

>>May be required:
_ Oxy–acetylene burning gear
_ 25mm Reamer
_ Steel grinder
_ 25mm Drift Pins

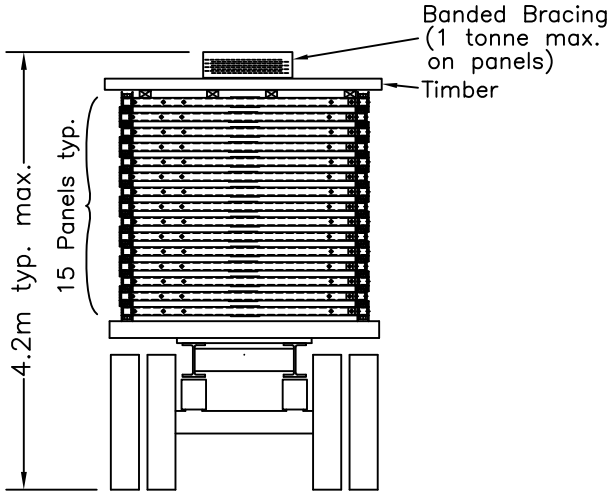

Section AA

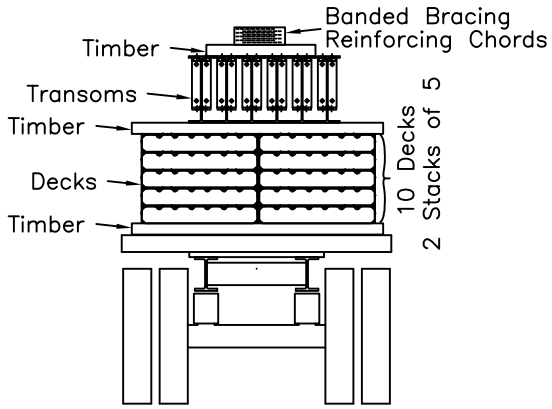

Section BB

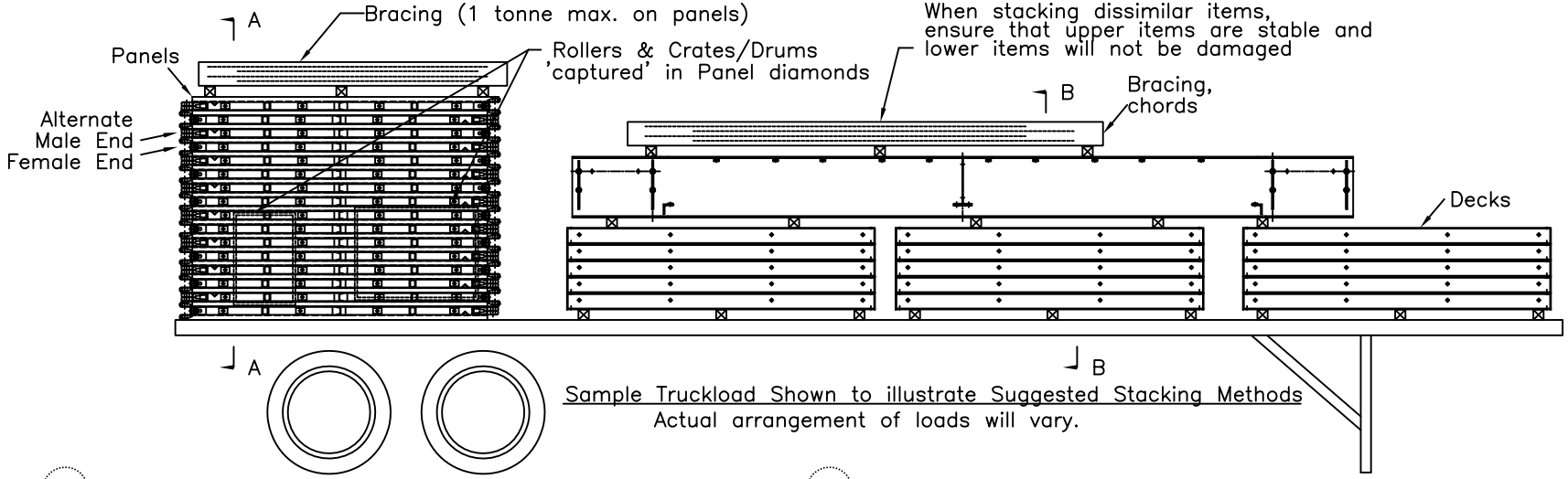

Sample Truckload Shown to illustrate Suggested Stacking Methods
Actual arrangement of loads will vary.

MABEY INC.
6770 DORSEY RD.
ELKRIDGE, MD 21227
PH. (410) 379-2800
OR 1-800-42 "MABEY"
FAX (410) 379-2801

Suggested Truss Assembly:

Trusses are most conveniently assembled by working from the 'Male' end back.
Begin each Truss by assembling the 'Male End' Bay (Bay 6 or Bay 11) in the horizontal position.
These end bays are always High Shear panels without top swayframes or bottom reinforcing chords, so the assembly is more straightforward. The 'top–offset' chords which are required are best installed later.

Step 1:
Lay an MC412 High Shear Panel horizontally across some temporary timbers. Connect an MC417 Vertical Frame to the Female end Panel Vertical. Connect the MC359 Swayframe to the top (web–side) of the Panel's Bottom Chord. Attach a second MC412 panel to the corresponding bolt–holes in the bracing frames. Hand–tighten all bolts.

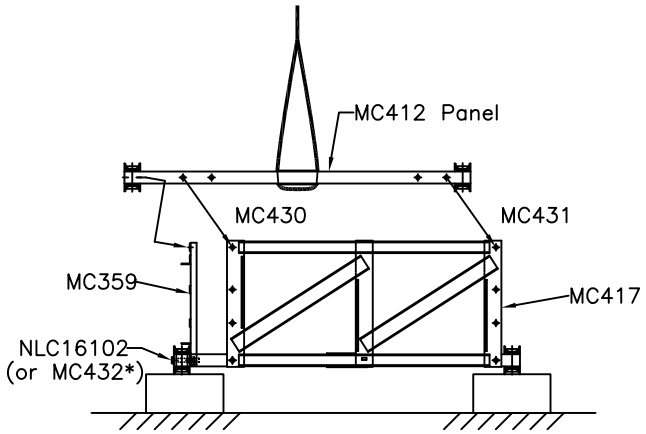

* Sway struts only connect the 18 internal panel–lines. At every location in the outermost panel–lines, attach the lower swayframe (or reinforcing chord) to the panel with MC432 bolts.

View on Female End

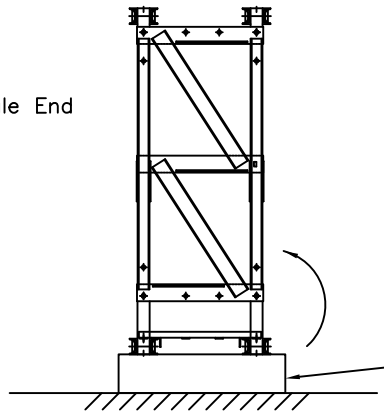

Step 2:
Stand the assembly upright, resting on timbers.
Typically, the bracing bolts are hand–tightened only, until the bracing in next Bay is fully installed.

Section BB
typical rigging arrangement
(panel hangs 'plumb')

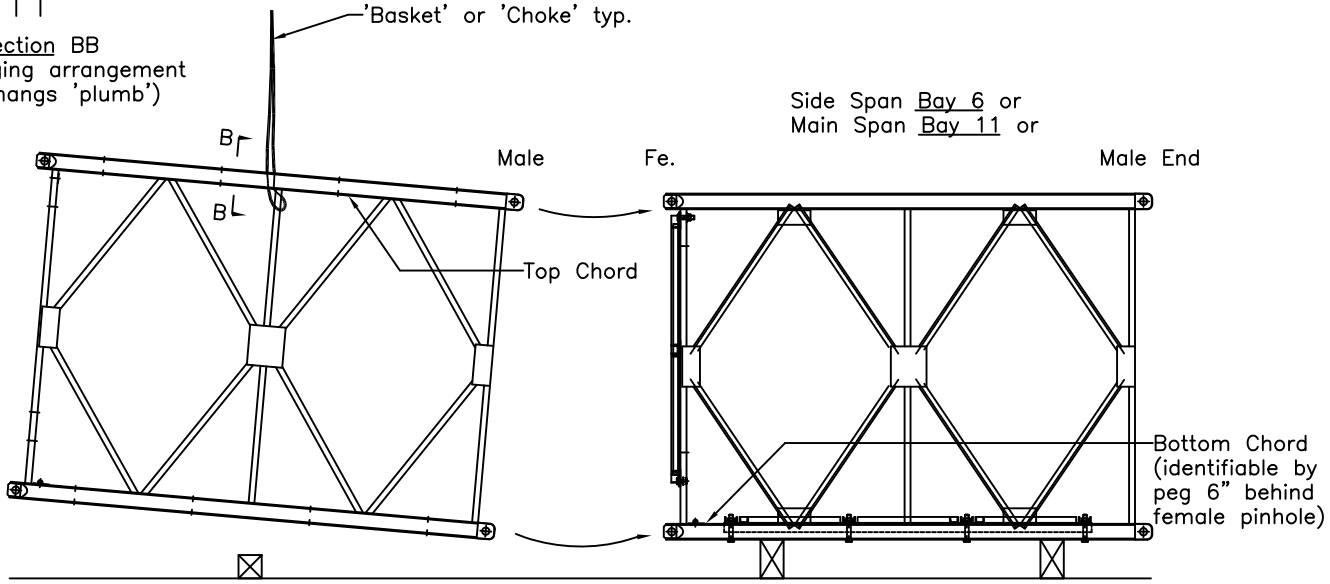

Step 3:
All subsequent bays in the truss are completed in the following sequence:
'Hang' the next panels to the back of the assembled bay. Attach the reinforcing chords to the top and/or bottom of the panel as required, taking care to pre–install the NLC16102 (longest) bolts where Sway Struts will be attached.
(If desired, attach the Reinforcing Chords to the Panel in the horizontal position Before attaching the Panel to the truss.)
Install the MC359 Swayframes to the top and/or bottom panel chord as required, taking care to pre–install the NLC16102 bolts where sway–struts will be attached. Attach the Sway Struts to one side of the truss where required.
The final installation (lift–in) will be easier if the Sway Struts are half–fitted while on the ground.
Install the MC417 Vertical Frame (except in Bay 1)
(The components are typically assembled in order of heaviest to lightest)
When all bays in the truss are assembled, complete the end bays by installing the End Posts, NLC13180 Vertical Frames, and 'Top Offset' Reinforcing Chords. Check that all of the bolts are tightened, and all of the panel pins have their safety clips.

SITE CONDITIONS AND/OR CERTAIN APPLICATIONS OF THE EQUIPMENT MAY REQUIRE MODIFICATION TO A PROCEDURE
NO PROCEDURE SHOULD BE UNDERTAKEN WITHOUT DUE CONSIDERATION TO THE SAFETY OF PERSONELL, PROPERTY, AND EQUIPMENT
MABEY UNIVERSAL

MABEY INC.
6770 DORSEY RD.
ELKRIDGE, MD 21075
PH. (410) 379-2800
OR 1-800-42 "MABEY"
FAX (410) 379-2801

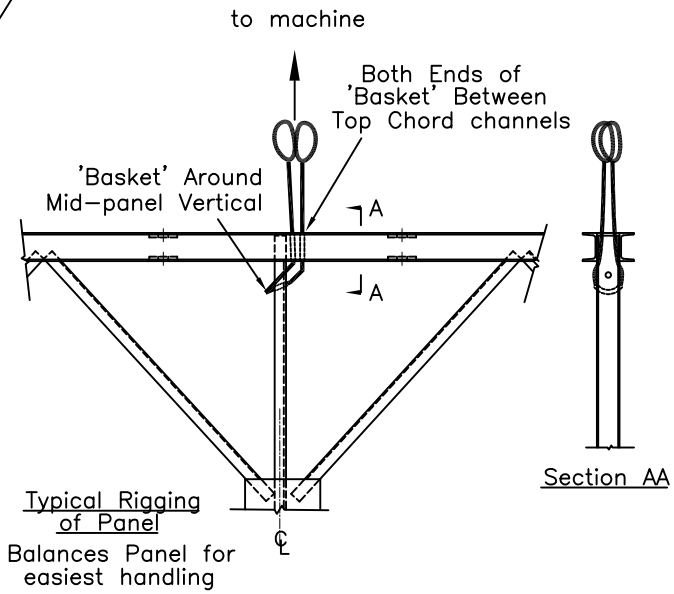

First Panels

i, Procedure: (The Design Engineer provides specific details for equipment installation which will vary depending on the bridge type and build method. Typical details follow.)

a, Position a Transom (Transoms are interchangable in any given bridge) on Blocking so that the Bottom Flange is 0.20m above the launch abutment rolllers and the coped flange faces the build area. The beam should be centered across the roadway c/l, and 0.7 x first panels behind the launch abutment rollers. The Blocking should be 0.60m in from the inner panel c/l.

b, End panels and standard panels must be installed according to the design plan. Pick the specific first Panel required Top end 'Up', and position it over the inner panel c/l with the Female end of the Panel just behind the blocked Transom. Maneuver the Panel so that the 28mm dowel (Transom Seat) on the panel's bottom chord engages the hole on the uncoped side of the transom's bottom flange, and the 25mmø holes in the Panel Vertical meets the round bosses on the Transom web. Insert a Transom Bolt through the Panel Vertical into the Transom, and attach a Nut. Attach a Launch Raker from the Panel Vertical Top hole to the top corner transom boss. (Substitute Vertical Frame for Raker if building bridge without nose.) Rest the front of the Panel on the Launch rollers. Ensure that the timber, rollers, raker and panel are stable, then unhook the rigging and install the Panel and Raker on the opposite side.

c, Install any aditional equipment (as required) to complete the 1st Bay. Build Bay 2. relocate the temporary blocking from beneath the first Transom to the back of Bay 2. When the structure reaches the first construction roller location, remove the timbers and continue building the bridge entirely on the rollers. Lock the roller brakes and/or tie off the bridge to prevent accidental movement.

d, For 'Lift–in' or 'Build in Place' installation, the procedure is similar except that timber cribs are substituted for rollers throught the build.

Elevation
Showing First Panel being attached to Transom

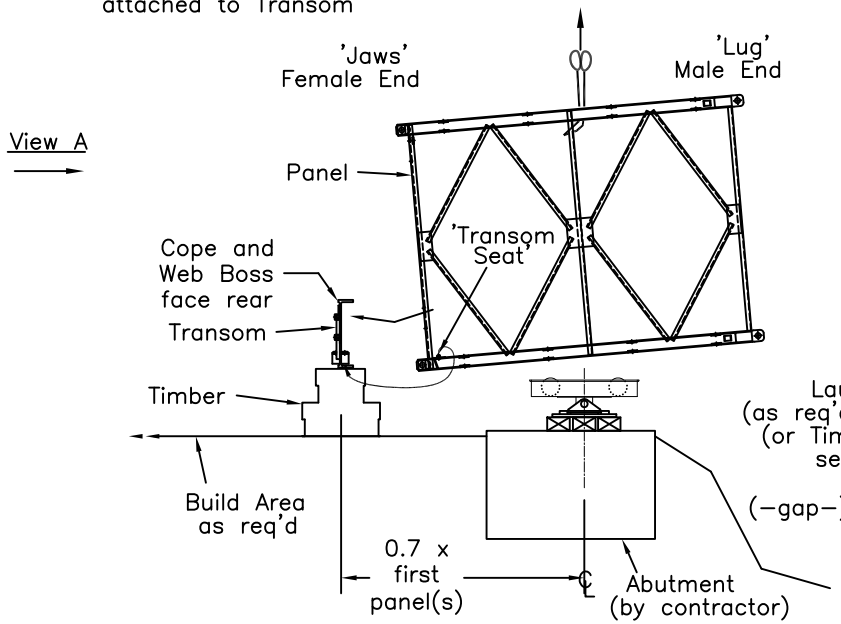

View A
Showing Panel and Raker

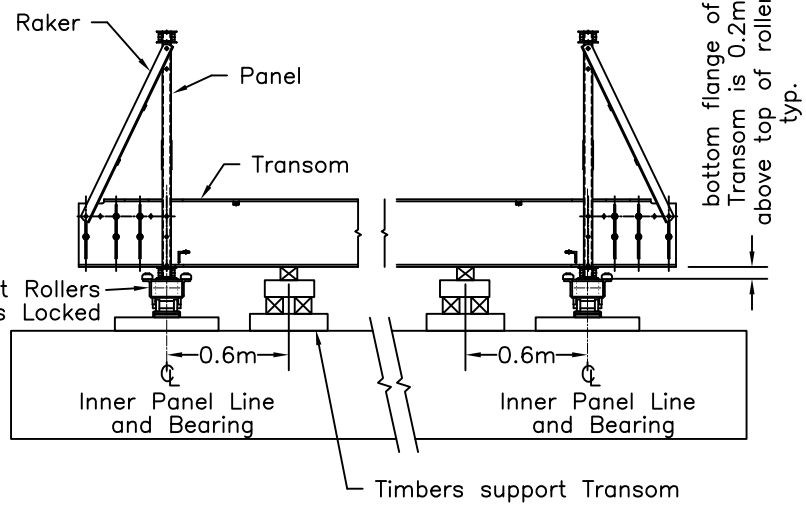

MABEY INC.
6770 DORSEY RD.
ELKRIDGE, MD 21075
PH. (410) 379-2800
OR 1-800-42 "MABEY"
FAX (410) 379-2801

SC–02F
Female End of Bridge Connections:
Transom to Panel
End Post to Panel
Tie Beam to End Post

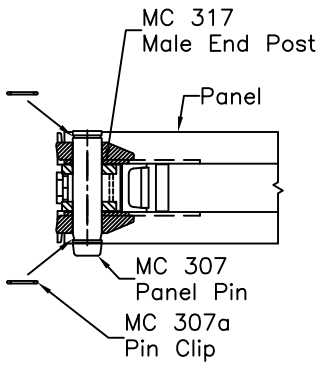

Male End Post to Panel

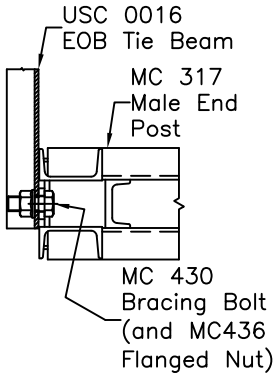

Tie Beam to End Post

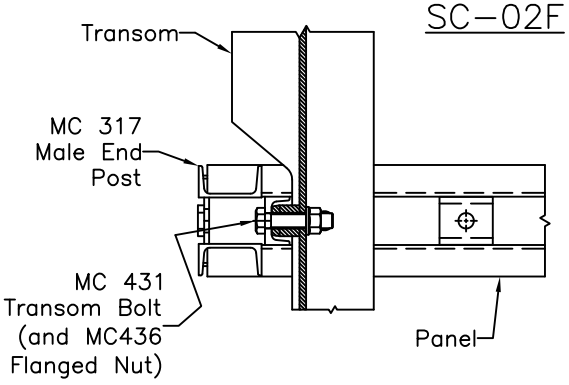

Transom to Panel Connections

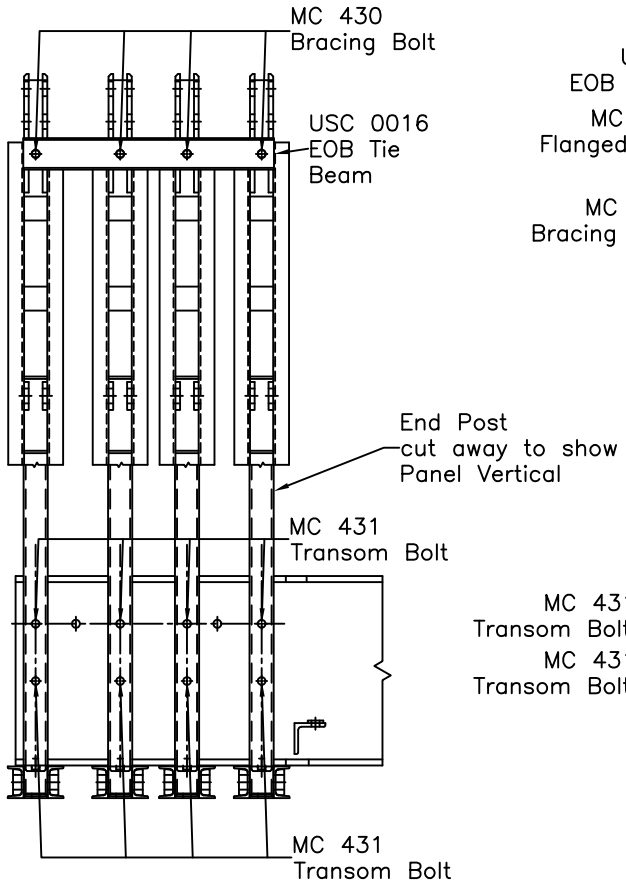

Female End of Bridge

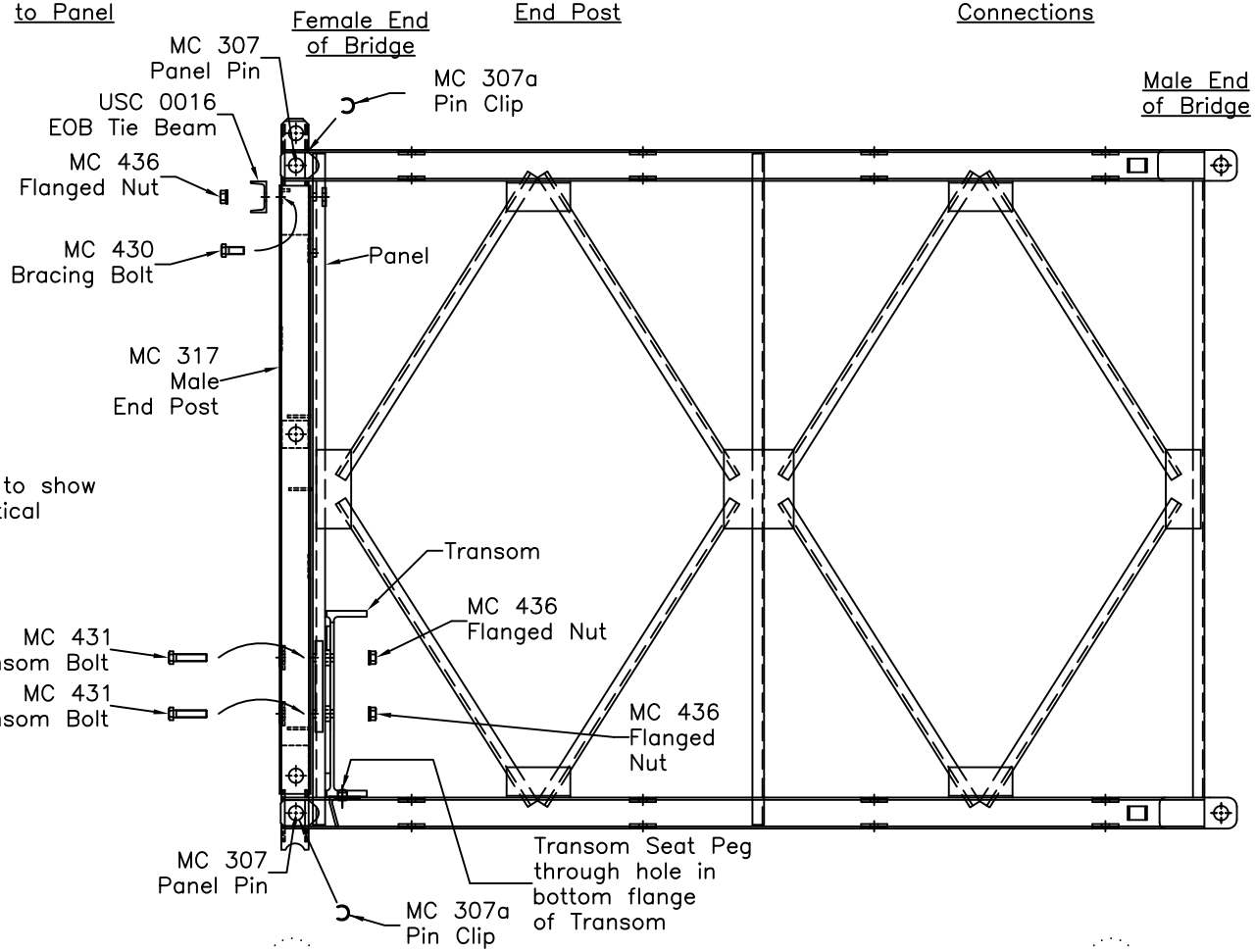

Male End of Bridge

MABEY INC.
6770 DORSEY RD.
ELKRIDGE, MD 21075
PH. (410) 379-2800
OR 1-800-42 "MABEY"
FAX (410) 379-2801

SC–02M
Male End of Bridge Connections:
End Post to Panel
Transom to End Post
Tie Beam to End Post

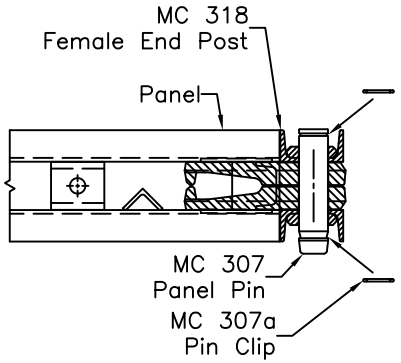

End Post to Panel

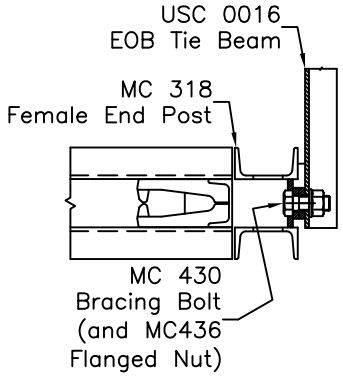

Tie Beam to End Post

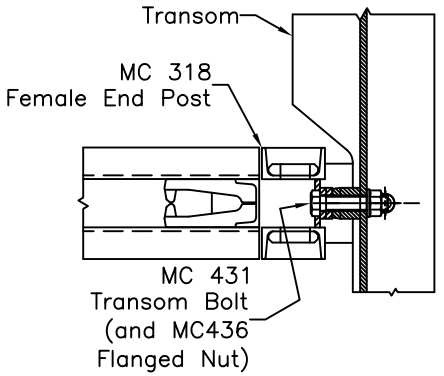

Transom to End Post

SC–02M

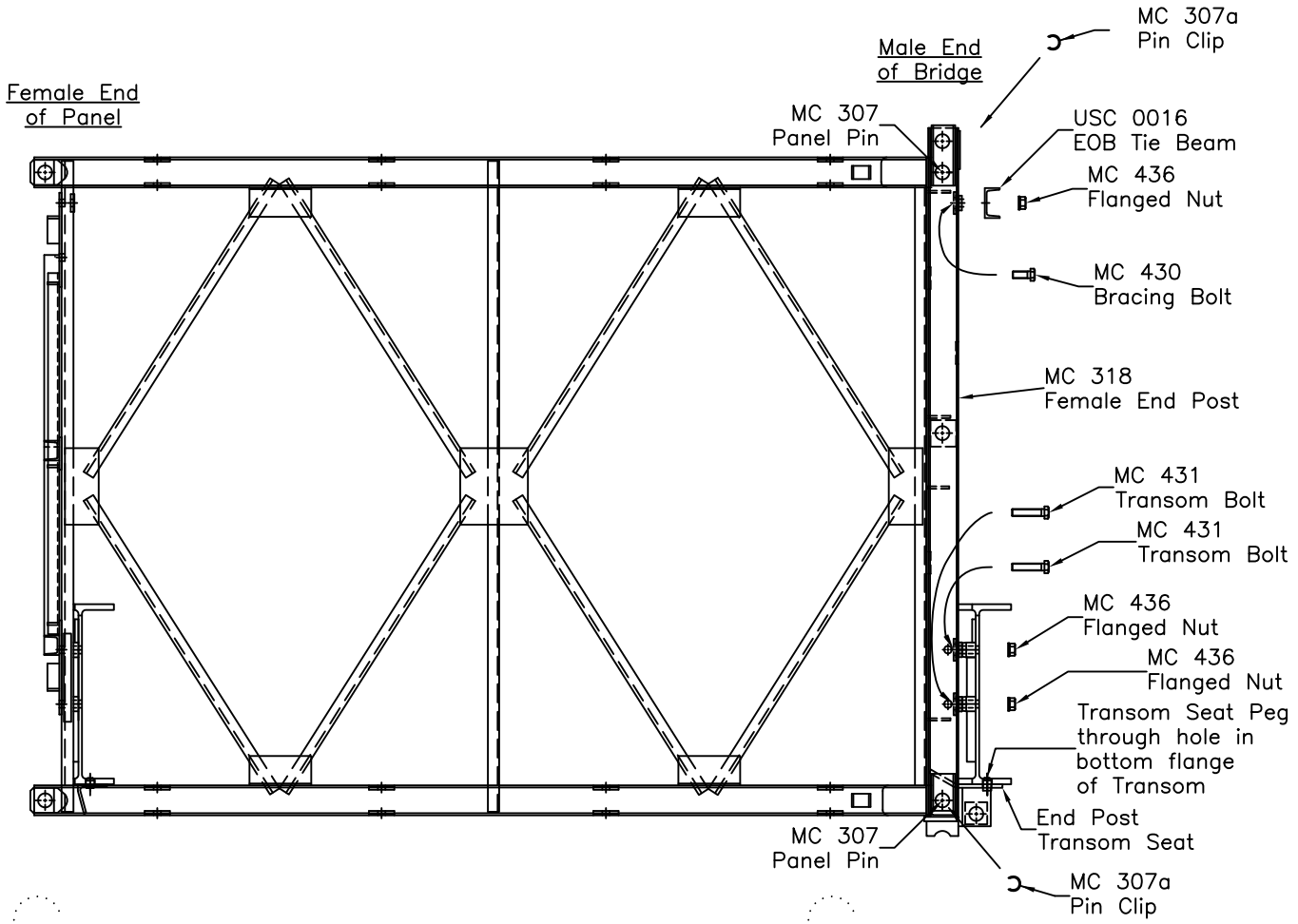

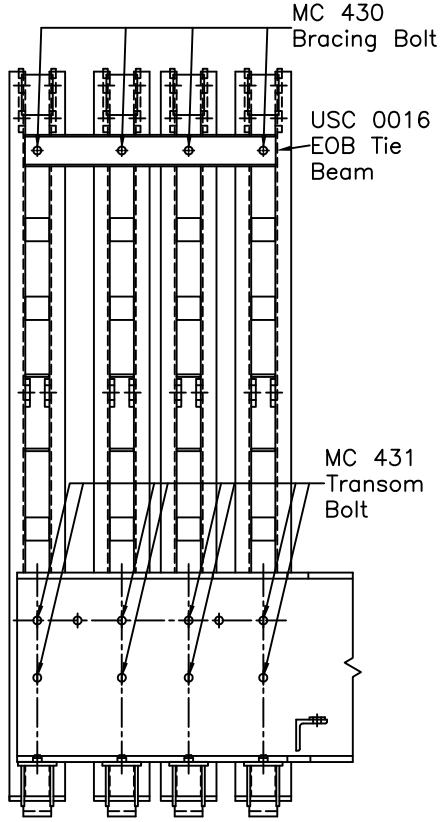

MABEY INC.
6770 DORSEY RD.
ELKRIDGE, MD 21075
PH. (410) 379-2800
OR 1-800-42 "MABEY"
FAX (410) 379-2801

SC–03

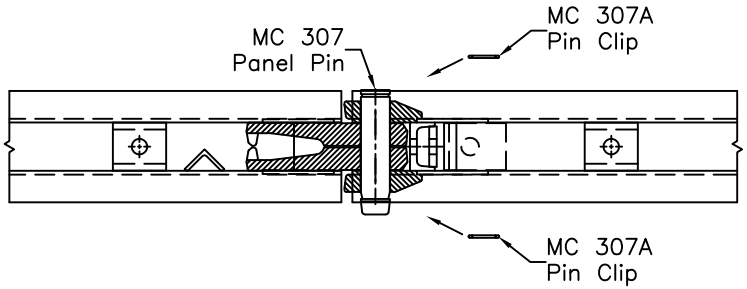

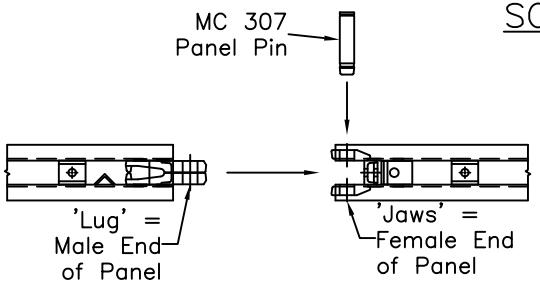

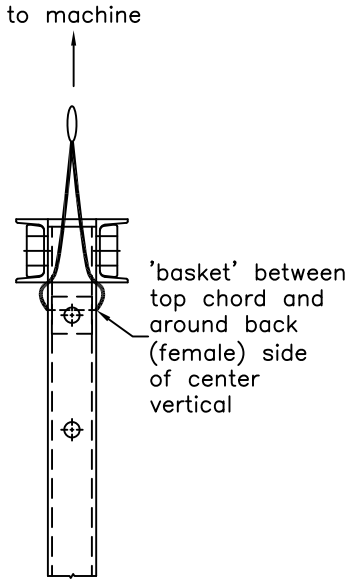

Section AA showing
suggested rigging
of panel

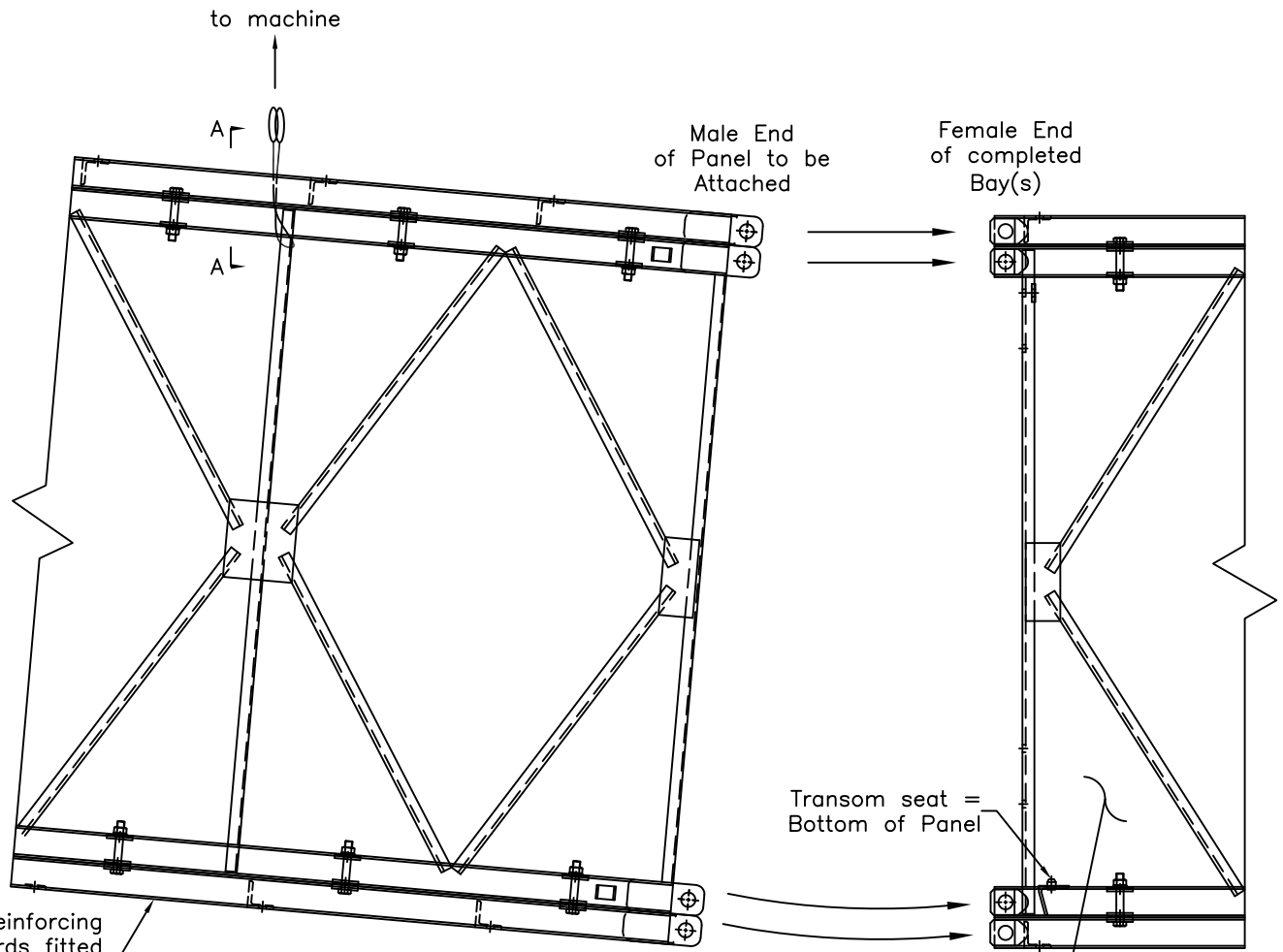

SC–03
Panel to Panel Connection

MABEY INC.
6770 DORSEY RD.
ELKRIDGE, MD 21075

PH. (410) 379-2800
OR 1-800-42 "MABEY"
FAX (410) 379-2801

SC–04

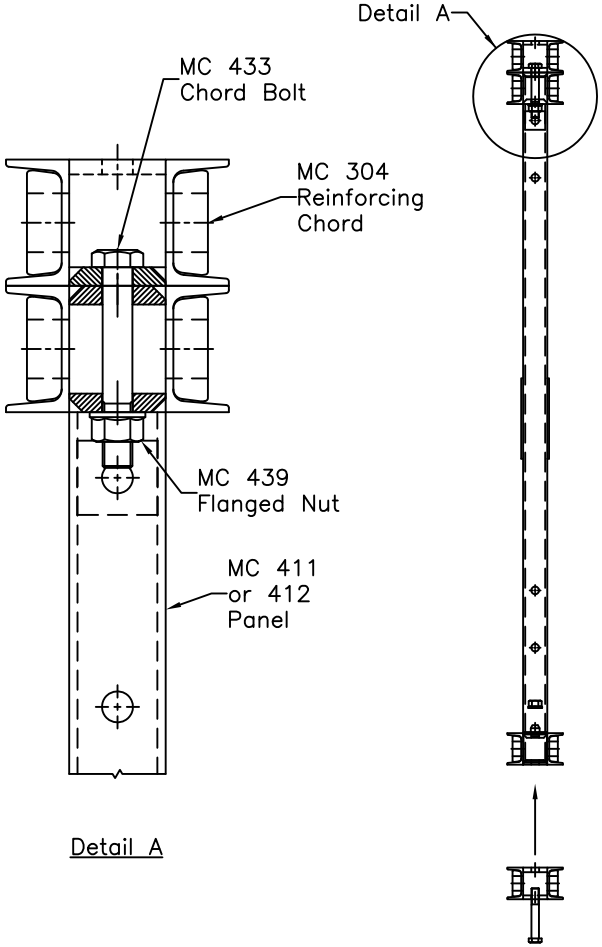

Detail A

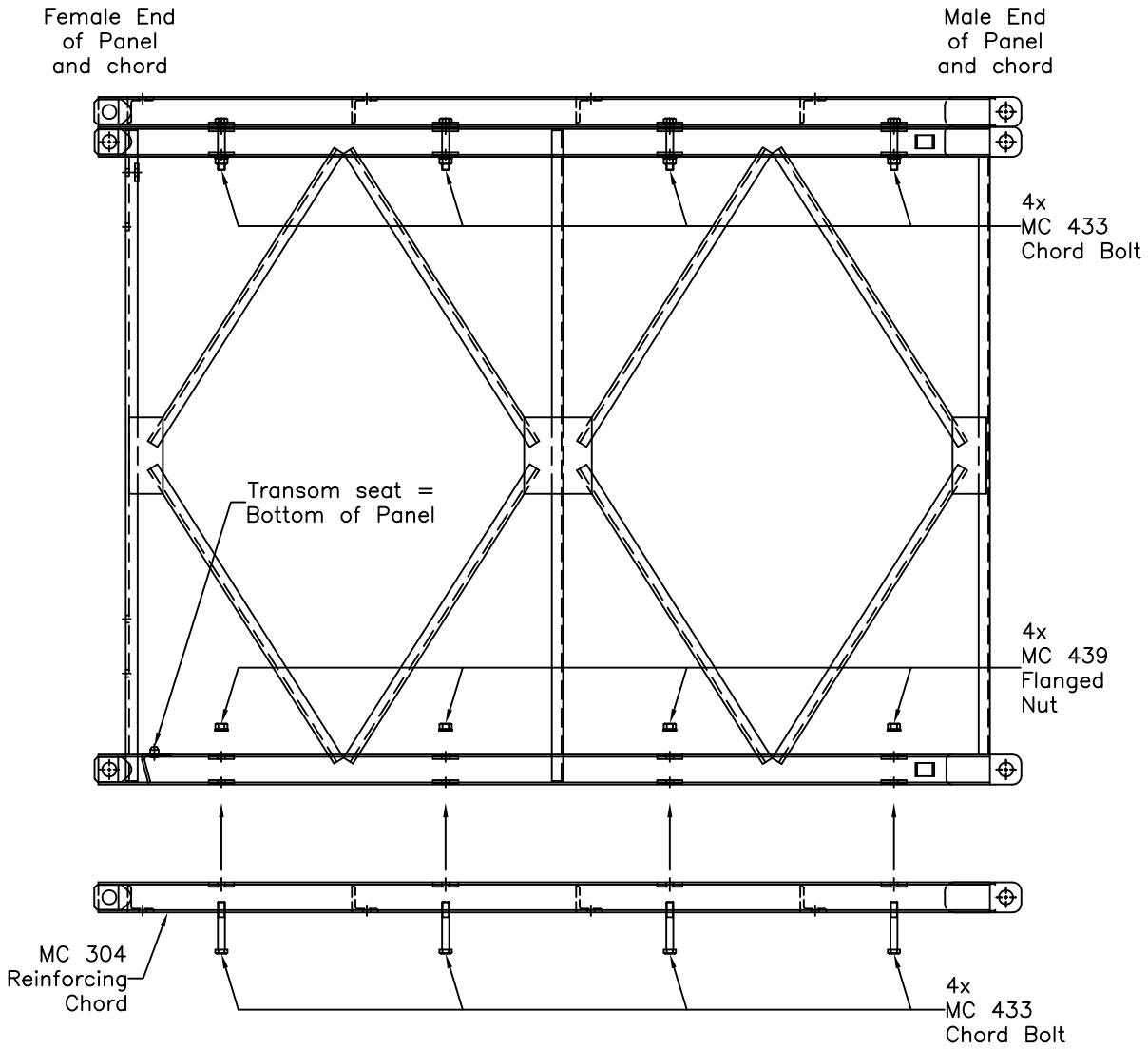

SC–04
Reinforcing Chord
Connection

Note:

Pre–attaching chords to panels typically reduces total build time.
To pre–attach chords, determine the quantity and type of chorded panels required (double storey and launch nose constructions may be chorded top only or bottom only).
Lay panel flat in a convenient staging area, align the chord's bolting blocks with the panel's bolting blocks. Insert and snug–tighten chord bolts. (Do not final tighten until after making pin connections.)

MABEY INC.
6770 DORSEY RD.
ELKRIDGE, MD 21075

PH. (410) 379-2800
OR 1-800-42 "MABEY"
FAX (410) 379-2801

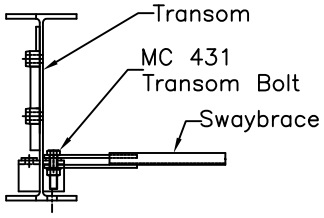

Section AA
Swaybrace to Angle Bracket

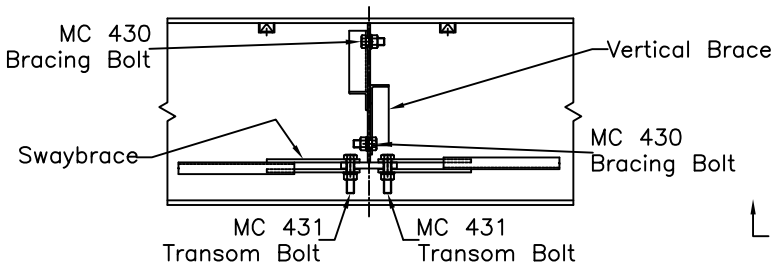

Section BB Swaybrace and
Vertical Brace to Center Bracket

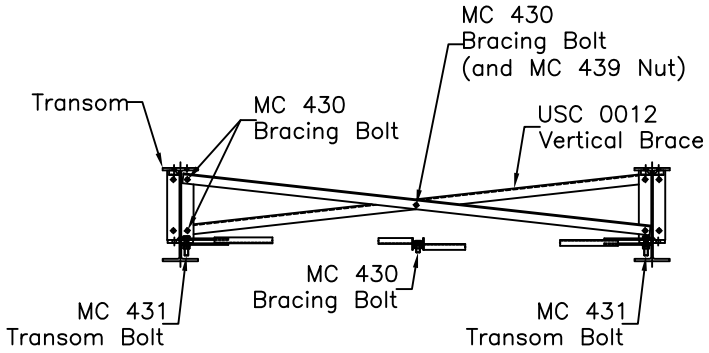

Section CC Swaybrace and
Vertical Brace to Center Bracket

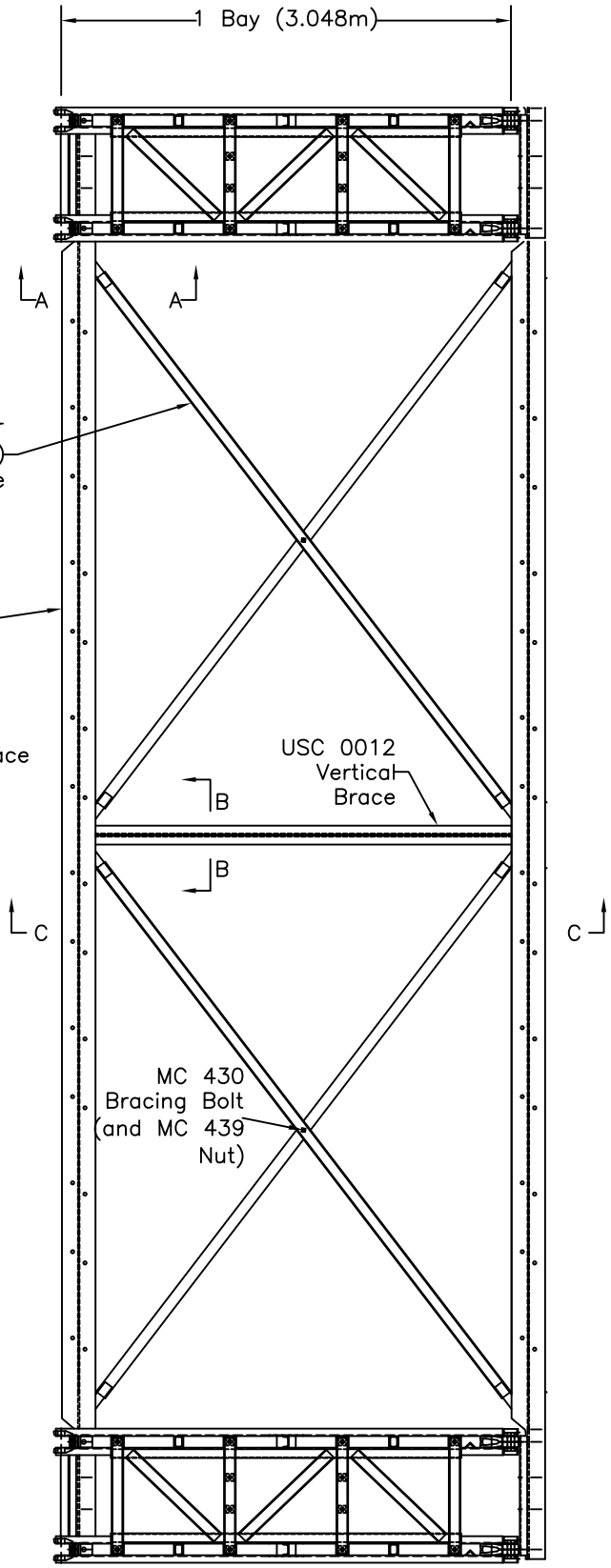

Sway and Vertical Brace Connections

BUILD DETAIL
SITE CONDITIONS AND/OR CERTAIN APPLICATIONS OF THE EQUIPMENT MAY REQUIRE MODIFICATION TO A PROCEDURE
NO PROCEDURE SHOULD BE UNDERTAKEN WITHOUT DUE CONSIDERATION TO THE SAFETY OF PERSONELL, PROPERTY, AND EQUIPMENT
MABEY UNIVERSAL

MABEY INC.
6770 DORSEY RD.
ELKRIDGE, MD 21075
PH. (410) 379-2800
OR 1-800-42 "MABEY"
FAX (410) 379-2801

BUILD DETAIL
SITE CONDITIONS AND/OR CERTAIN APPLICATIONS OF THE EQUIPMENT MAY REQUIRE MODIFICATION TO A PROCEDURE
NO PROCEDURE SHOULD BE UNDERTAKEN WITHOUT DUE CONSIDERATION TO THE SAFETY OF PERSONELL, PROPERTY, AND EQUIPMENT
MABEY UNIVERSAL

SC–07

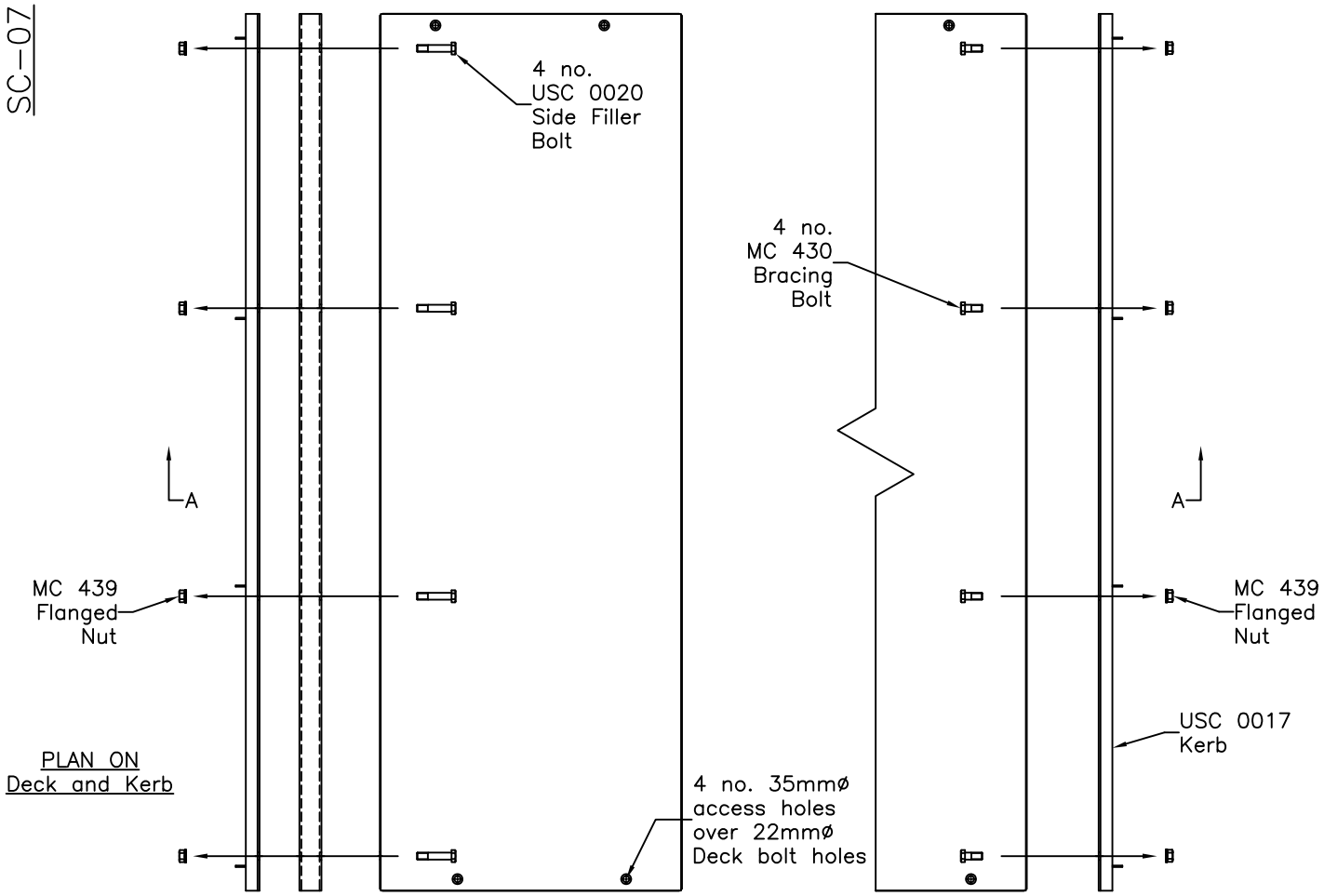

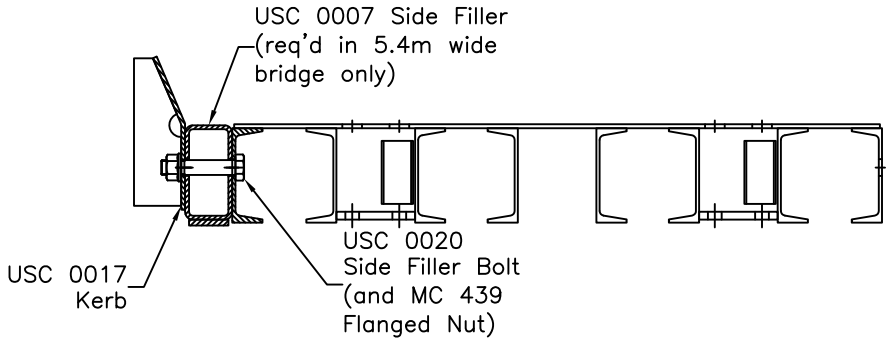

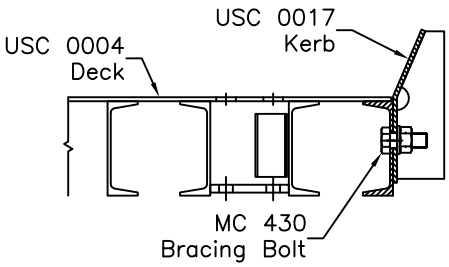

Section AA

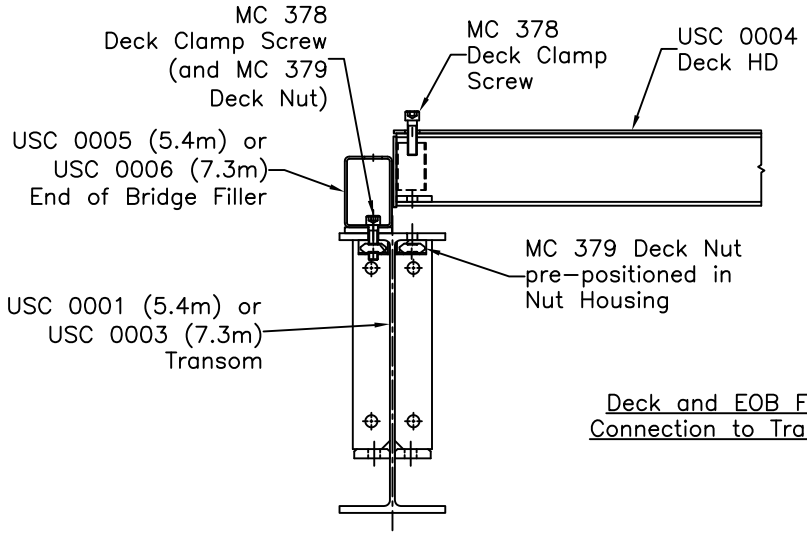

Deck and EOB Filler
Connection to Transom

SC–07
Deck, Kerb, Side Filler, and EOB Filler Connections

MABEY INC.
6770 DORSEY RD.
ELKRIDGE, MD 21075
PH. (410) 379-2800
OR 1-800-42 "MABEY"
FAX (410) 379-2801

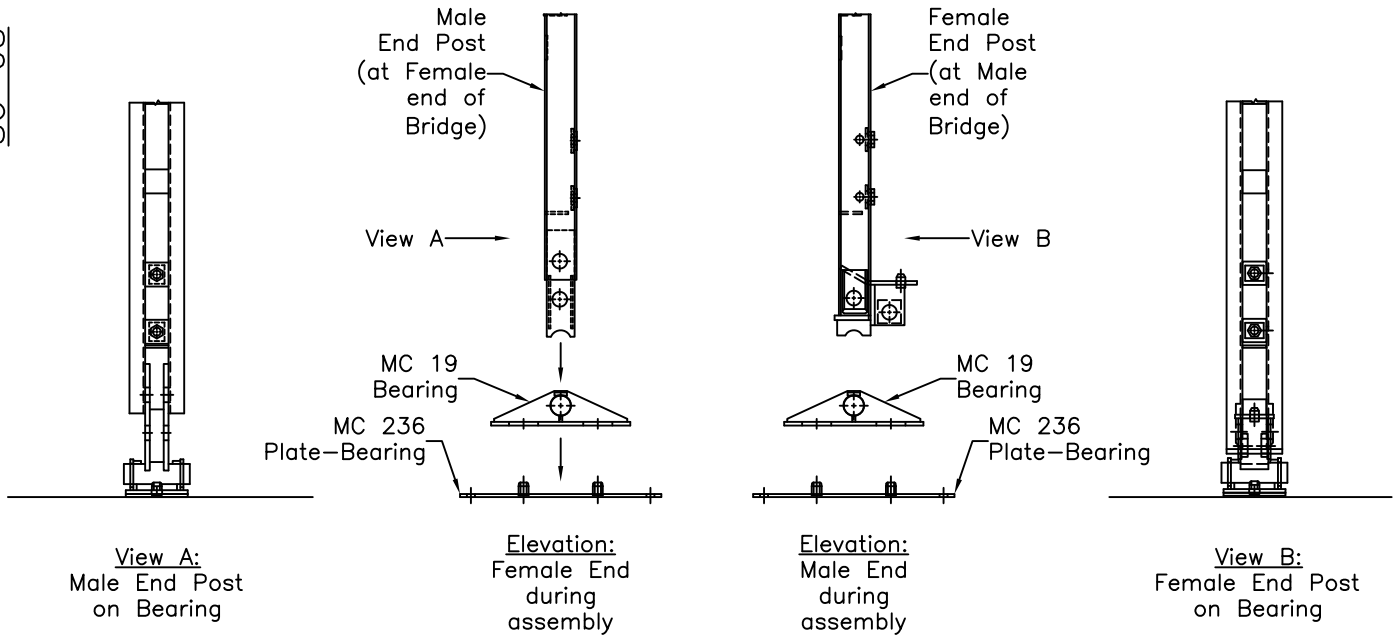

View A:
Male End Post
on Bearing

Elevation:
Female End
during
assembly

Elevation:
Male End
during
assembly

View B:
Female End Post
on Bearing

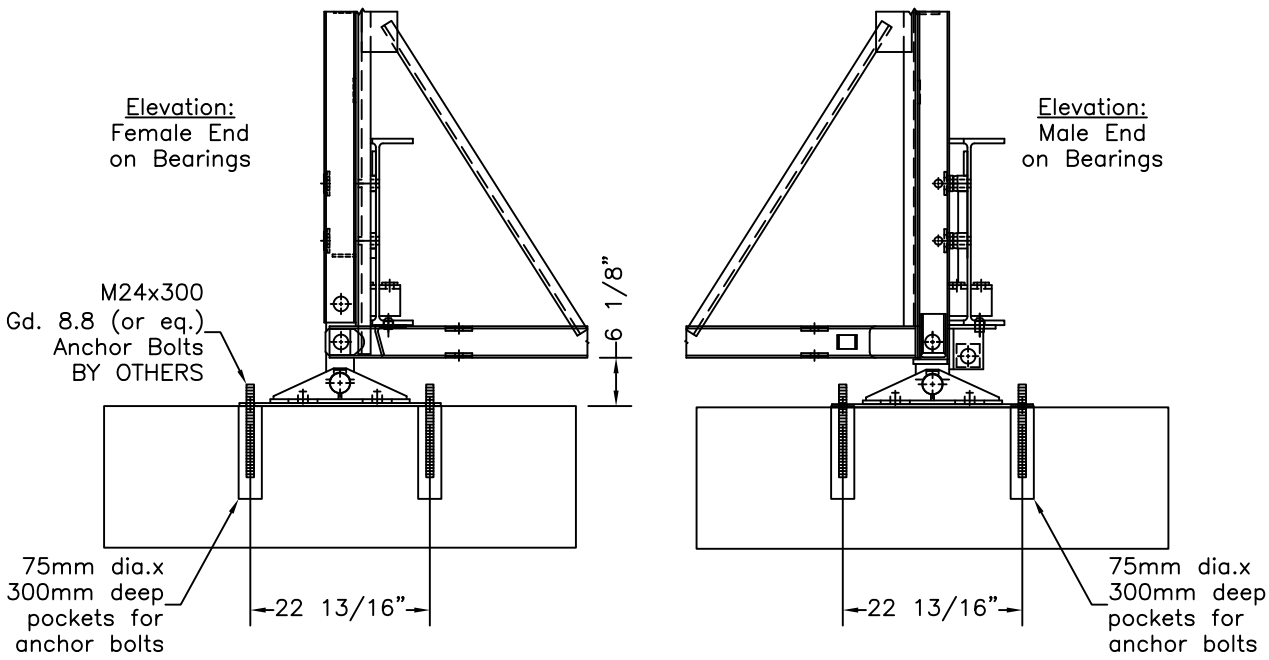

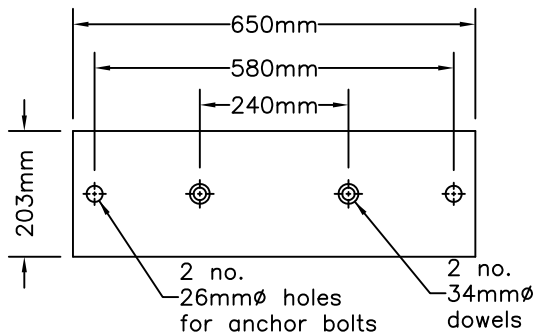

Plan on MC 236
Bearing Plate

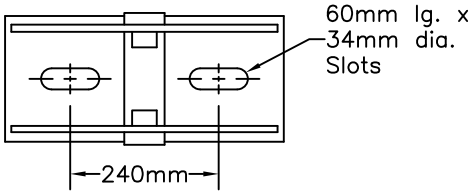

Plan on MC 19
Bearing

SC–08 BEARING DETAILS

BUILD DETAIL
SITE CONDITIONS AND/OR CERTAIN APPLICATIONS OF THE EQUIPMENT MAY REQUIRE MODIFICATION TO A PROCEDURE
NO PROCEDURE SHOULD BE UNDERTAKEN WITHOUT DUE CONSIDERATION TO THE SAFETY OF PERSONELL, PROPERTY, AND EQUIPMENT
MABEY UNIVERSAL

MABEY INC.
6770 DORSEY RD.
ELKRIDGE, MD 21075
PH. (410) 379-2800
OR 1-800-42 "MABEY"
FAX (410) 379-2801

SC-09 ROLLER DETAILS

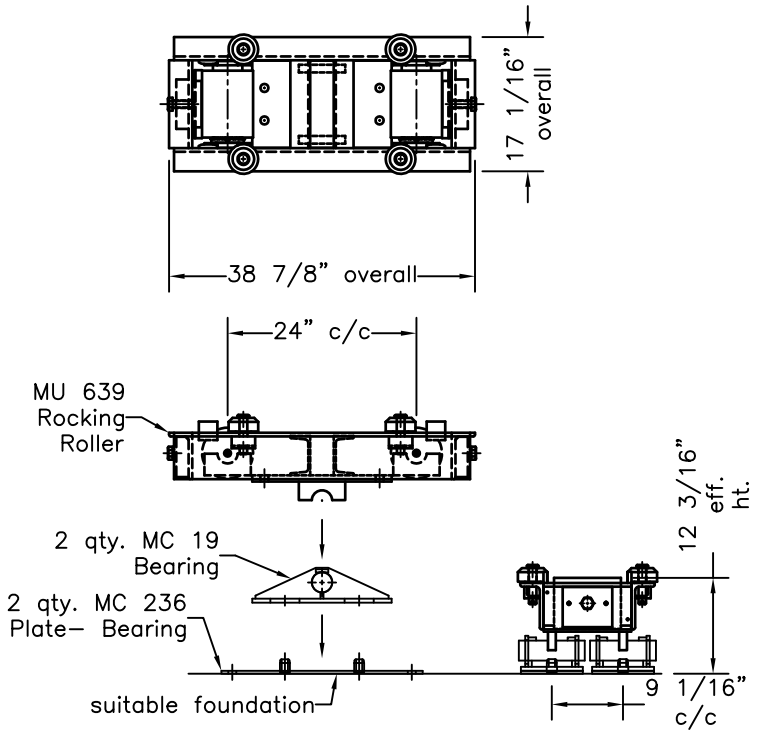

MU 639
Rocking Roller
Detail

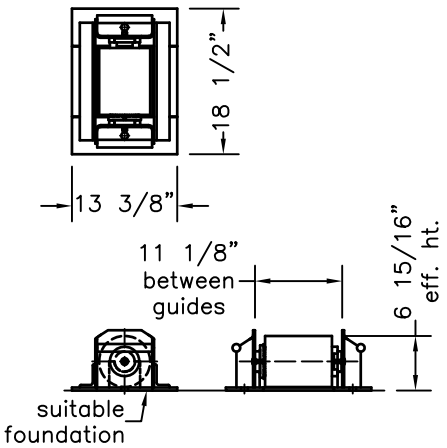

MU 638
Plain Roller
Detail

Roller capacity = 30,000 lbs. (max.) per drum.
Coefficient of friction = 0.02.

MABEY UNIVERSAL
NO PROCEDURE SHOULD BE UNDERTAKEN WITHOUT DUE CONSIDERATION TO THE SAFETY OF PERSONELL, PROPERTY, AND EQUIPMENT
SITE CONDITIONS AND/OR CERTAIN APPLICATIONS OF THE EQUIPMENT MAY REQUIRE MODIFICATION TO A PROCEDURE
BUILD DETAIL

MABEY INC.
6770 DORSEY RD.
ELKRIDGE, MD 21075
PH. (410) 379-2800
OR 1-800-42 "MABEY"
FAX (410) 379-2801

WPF BRIDGE #3 PROJECT

WESTFIELD, MASSACHUSETTS

SPRINGFIELD WATER & SEWER COMMISSION

CONTRACT DRAWINGS - JUNE 2018
RECORD DRAWINGS - OCTOBER 2019

SHEET NO.	SHEET TITLE
G-001	COVER SHEET AND DRAWING INDEX
C-001	SITE LAYOUT AND UTILITY PLAN
C-002	SITE GRADING PLAN
C-002A	SITE GRADING PLAN EXPANDED VIEW
C-003	SITE PLAN SECTION AND DETAILS
S-001	SUBSTRUCTURE PLAN, SUPERSTRUCTURE PLAN, AND STRUCTURAL NOTES
S-002	STRUCTURAL DETAILS
E-001	ELECTRICAL SITE PLAN

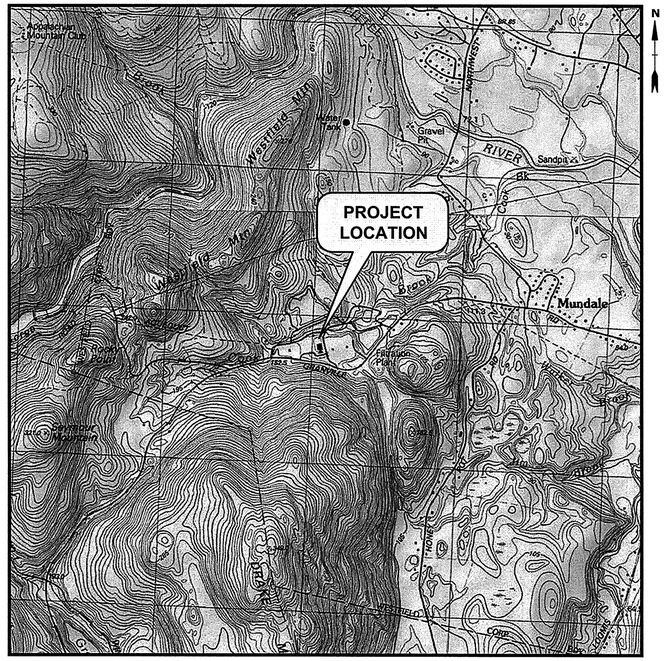

LOCATION PLAN
1" = 1,000'

OWNER
SPRINGFIELD WATER & SEWER COMMISSION
PO BOX 995
SPRINGFIELD, MA 01001

PROJECT ADDRESS
WPF WATER TREATMENT PLANT
1515 GRANVILLE ROAD
WESTFIELD, MA 01085

ENGINEER
TIGHE & BOND
53 SOUTHAMPTON ROAD
WESTFIELD, MA 01085
(413) 562-1600

COMMONWEALTH OF MASSACHUSETTS
ELIZABETH G. BALDWIN
CIVIL
No. 41618
REGISTERED PROFESSIONAL ENGINEER
10/31/19

Tighe&Bond
www.tighebond.com

SPRINGFIELD WATER AND SEWER COMMISSION

RECORD DRAWING
THIS RECORD DRAWING WAS PREPARED BASED ON AS-BUILT INFORMATION PROVIDED BY THE CONTRACTOR AND INDICATES ONLY SIGNIFICANT CHANGES MADE FROM THE DESIGN DRAWINGS DURING CONSTRUCTION.

COMPLETE SET 8 SHEETS

Oct 31, 2019-1:13pm Plotted By: CEY
Tighe & Bond, Inc. J:\S\S2057 SWSC\020 - WPF Temporary Bridge\Drawings_Figures\AutoCAD\Record Drawings\S2057-020-C-RECORD DRAWING.dwg

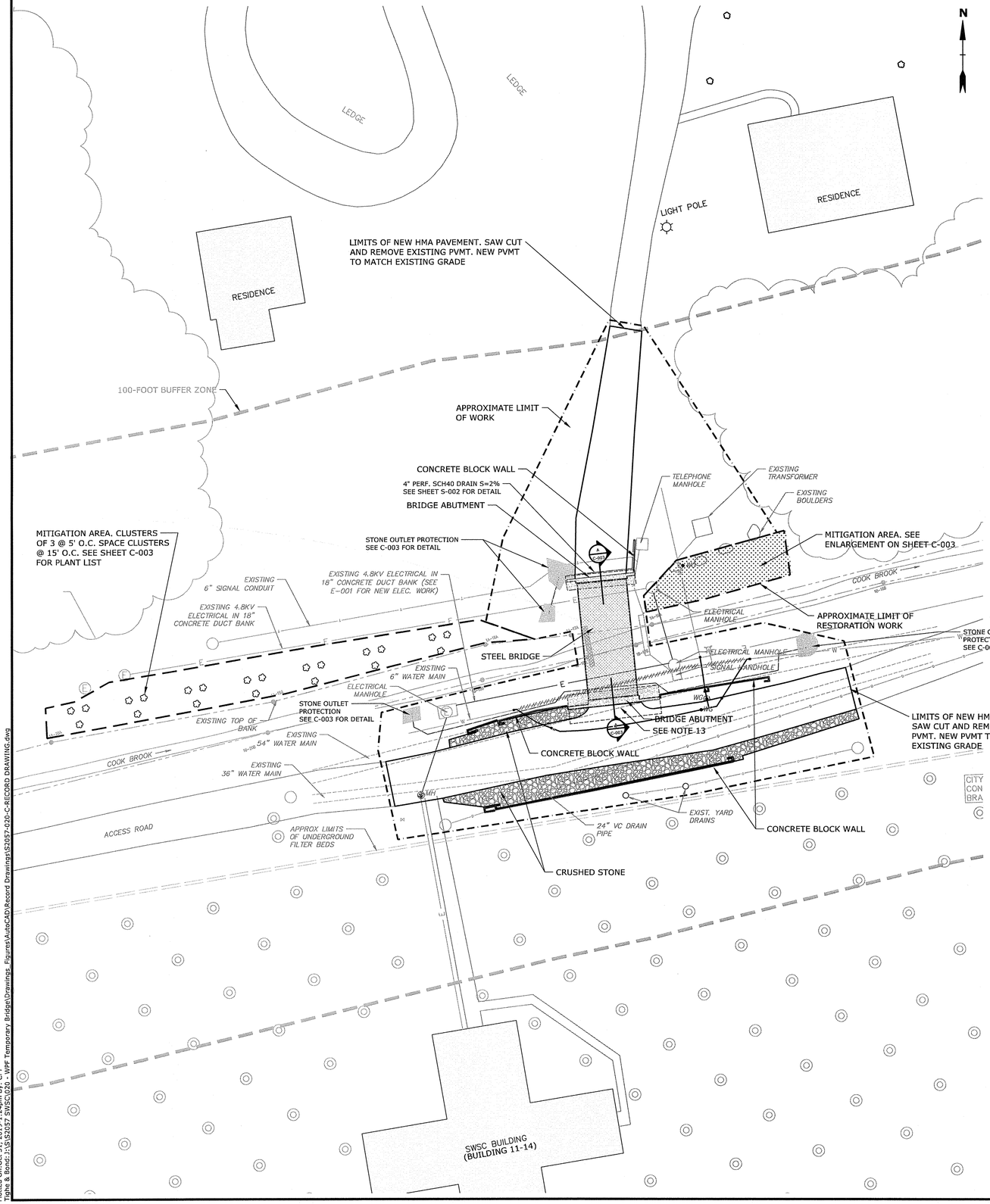

GENERAL NOTES:

1. PER MASSACHUSETTS LAW, CONTRACTOR SHALL CALL 1-888-DIG-SAFE, (1-888-344-7233), THE MUNICIPALITY AND THE PROPERTY OWNER PRIOR TO ANY UNDERGROUND EXCAVATION ON SITE. THE OWNER WILL FIELD LOCATE AND MARK UNDERGROUND UTILITIES IN THE FIELD. THE DIG-SAFE VERIFICATION NUMBER SHALL BE SUBMITTED TO THE OWNER PRIOR TO ANY EXCAVATION, DEMOLITION AND REMOVAL OR CONSTRUCTION WORK.
2. FIELD VERIFY ALL EXISTING CONDITIONS PRIOR TO CONSTRUCTION. IF FIELD CONDITIONS ARE OBSERVED THAT VARY SIGNIFICANTLY FROM THOSE SHOWN ON THESE DRAWINGS, IMMEDIATELY NOTIFY THE ENGINEER IN WRITING FOR RESOLUTION OF THE CONFLICTING INFORMATION.
3. PROVIDE A SMOOTH, FLUSH TRANSITION BETWEEN ALL NEW AND EXISTING PAVEMENTS.
4. COMPLY WITH OSHA'S LATEST STANDARDS FOR EXCAVATION WORK. FOLLOW ALL REQUIREMENTS OF OSHA'S EXCAVATION STANDARDS INCLUDING, BUT NOT LIMITED TO, THE PROVISION FOR A COMPETENT PERSON ON SITE AND ANY REQUIRED DOCUMENTATION THAT MAY REQUIRE CERTIFICATION BY A PROFESSIONAL ENGINEER.
5. MAINTAIN ALL UTILITIES FUNCTIONING PROPERLY IN THE AREAS UNDER CONSTRUCTION PRIOR TO THE TIME WHEN FINAL SYSTEM IS PUT INTO USE. LEAVE ALL PIPES AND STRUCTURES WITHIN THE LIMITS OF THIS CONTRACT IN A CLEAN AND OPERABLE CONDITION AT THE COMPLETION OF THE WORK. TAKE ALL NECESSARY PRECAUTIONS TO PREVENT SAND AND SILT FROM DISTURBED AREAS FROM ENTERING THE SYSTEM. CONTRACTOR IS RESPONSIBLE FOR DAMAGE SUSTAINED TO ANY EXISTING UTILITIES AND IS RESPONSIBLE FOR REPAIRS THAT COMPLY WITH THE REQUIREMENTS OF THE SWSC OR RESPECTIVE UTILITY COMPANY.
6. DISPOSE OF ANY AND ALL DEMOLISHED BUILDING MATERIAL, PAVEMENT, BITUMINOUS CURBING, CONCRETE, VEGETATION, SURPLUS MATERIAL, AND SITE RUBBLE OFF-SITE IN ACCORDANCE WITH THE LOCAL ORDINANCES, THE MASSACHUSETTS WETLAND PROTECTION ACT, CHAPTER 131, SECTION 40, G.L., AND ALL APPLICABLE STATE AND FEDERAL ENVIRONMENTAL REGULATIONS.
7. LOAM & SEED ALL DISTURBED AREAS UNLESS OTHERWISE SPECIFIED. OVER-EXCAVATE LOAM & SEED AREAS AS REQUIRED TO MEET GRADE.
8. CONDUCT ALL CLEARING, GRADING, DRAINAGE, CONSTRUCTION AND DEVELOPMENT IN STRICT ACCORDANCE WITH THE DRAWINGS.
9. WETLAND RESOURCE AREAS WERE DELINEATED BY TIGHE & BOND, INC. ON APRIL 2, 2018.
10. COORDINATE SIZE AND LOCATION OF NEW SIGNAL WIRE AND CONDUIT WITH THE OWNER.
11. REFER TO STRUCTURAL SHEETS FOR REDI-ROCK PERFORMANCE REQUIREMENTS.
12. CONTRACTOR SHALL RE-EXCAVATE AREA WHERE REPAIRS TO THE 54-INCH RAW WATER PIPE WERE PERFORMED ON MAY 18, 2018, AND REPLACE EXCAVATED MATERIAL WITH FLOWABLE FILL.
13. STRUCTURE LOCATIONS DEPICTED ON THIS DRAWING WERE BASED ON SURVEY PROVIDED BY LUDLOW CONSTRUCTION ON SEPTEMBER 12, 2019.
14. THE HORIZONTAL DATUM REFERENCED IS NAD83 AND THE VERTICAL DATUM IS NAV88.

EROSION CONTROL NOTES:

1. ALL EROSION CONTROL MEASURES SHOWN, SPECIFIED AND REQUIRED BY THE ENGINEER SHALL BE INSTALLED PRIOR TO ANY CONSTRUCTION OR IMMEDIATELY UPON REQUEST. MAINTAIN ALL SUCH CONTROL MEASURES UNTIL FINAL SURFACE TREATMENTS ARE IN PLACE AND/OR UNTIL PERMANENT VEGETATION IS ESTABLISHED.
2. PRIOR TO STARTING WORK, CLEARLY STAKE WORK LIMIT LINE(S). DO NOT DISTURB VEGETATION AND TOPSOIL BEYOND THE PROPOSED LIMIT LINE. COORDINATE WITH THE ENGINEER ON LOCATIONS FOR THE TEMPORARY STOCKPILING OF TOPSOIL DURING CONSTRUCTION.
3. SIDE SLOPES, SHOULDER AREAS AND DISTURBED VEGETATED AREAS, TO BE A MAXIMUM GRADE OF 3:1, COMPACTED, STABILIZED, LOAMED AND SEEDED AS SHOWN ON DRAWINGS. ALL SIDE SLOPES SHALL BE IMMEDIATELY FINE GRADED AND SEEDED IN ACCORDANCE WITH THE PROJECT SPECIFICATIONS.
4. SILT TRAPPED AT BARRIERS SHALL BE REMOVED AND DISPOSED OF IN UPLAND AREAS OUTSIDE BUFFER ZONES. ALL DISTURBED AREAS TO BE RESTORED.
5. ALL SILT-LADEN WATER MUST BE SETTLED OR FILTERED TO REMOVE SEDIMENTS PRIOR TO RELEASE TO ANY WATERWAY. IN A SEDIMENTATION OR FILTER BAG LOCATED DOWNSTREAM OF THE DEWATERED AREA.
6. DEWATER AS NECESSARY TO KEEP CONSTRUCTION AREAS FREE OF WATER. DISCHARGE WATER FROM DEWATERING TO APPROPRIATE LOCATION WITHOUT SEDIMENTATION.
7. ANY SEDIMENT TRACKED ONTO PUBLIC RIGHT-OF-WAYS SHALL BE SWEPT AT THE END OF EACH DAY.

GRAPHIC KEY:

- 100-FOOT RIVERFRONT BUFFER ZONE
- LIMIT OF WORK (APPROX)
- TOP OF BANK & WETLAND FLAG LOCATION
- 1B–8 — WETLAND FLAG NUMBER
- 481 — MINOR CONTOUR
- 480 — MAJOR CONTOUR
- EROSION CONTROL BARRIER
- TW 482.00 / BW 480.00 — TOP OF WALL ELEVATION / BOTTOM OF WALL ELEVATION
- 5% — MAGNITUDE & DIRECTION OF SLOPE
- A-A / C-003 — SEE SECTION A-A ON SHEET C-003

SCALE IN FEET
0 20' 40'
GRAPHIC SCALE

ABBREVIATIONS:

AASHTO	AMERICAN ASSOCIATION OF STATE HIGHWAY AND TRANSPORTATION OFFICIALS
BW	BOTTOM OF WALL
CL	CENTERLINE
HMA	HOT MIXED ASPHALT
LRFD	LOAD & RESISTANCE FACTOR DESIGN
MASSDOT	MASSACHUSETTS DEPT. OF TRANSPORTATION
PVMT	PAVEMENT
SWSC	SPRINGFIELD WATER & SEWER COMMISSION
TW	TOP OF WALL
WPF	WEST PARISH FILTER

RECORD DRAWING

THIS RECORD DRAWING WAS PREPARED BASED ON AS-BUILT INFORMATION PROVIDED BY THE CONTRACTOR AND INDICATES ONLY SIGNIFICANT CHANGES MADE FROM THE DESIGN DRAWINGS DURING CONSTRUCTION.

Tighe&Bond
www.tighebond.com

COMMONWEALTH OF MASSACHUSETTS
ELIZABETH G. BALDWIN
CIVIL
No. 41618
REGISTERED PROFESSIONAL ENGINEER
10/31/19

WPF Bridge #3 Project

Springfield Water & Sewer Commission

Westfield, MA

MARK	DATE	DESCRIPTION
1	10/31/2019	RECORD DRAWING
0	6/5/2018	ISSUED FOR CONSTRUCTION

PROJECT NO:	S2057-020
DATE:	09/18/2019
FILE:	S2057-020-C-RECORD DRAWING.dwg
DRAWN BY:	TJG, CFY
CHECKED:	EGB
APPROVED:	EGB, PJG

SITE LAYOUT AND UTILITY PLAN

SCALE: 1" = 20'

C-001

Last Saved: 10/31/2019
Plotted: Oct 31, 2019 - 11:24am By: CFY
Tighe & Bond: J:\S\S2057 SWSC\020 - WPF Temporary Bridge\Drawings_Figures\AutoCAD\Record Drawings\S2057-020-C-RECORD DRAWING.dwg

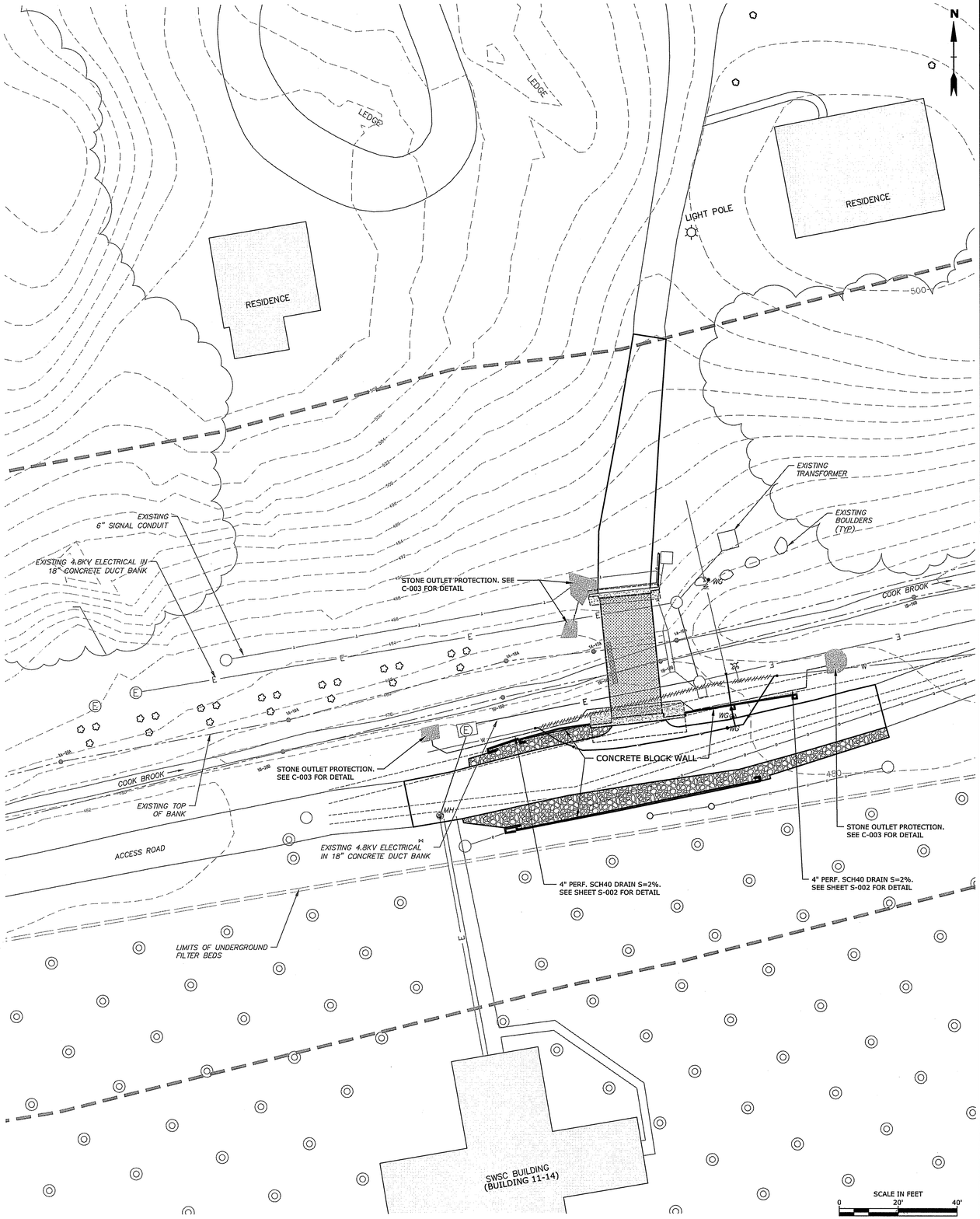

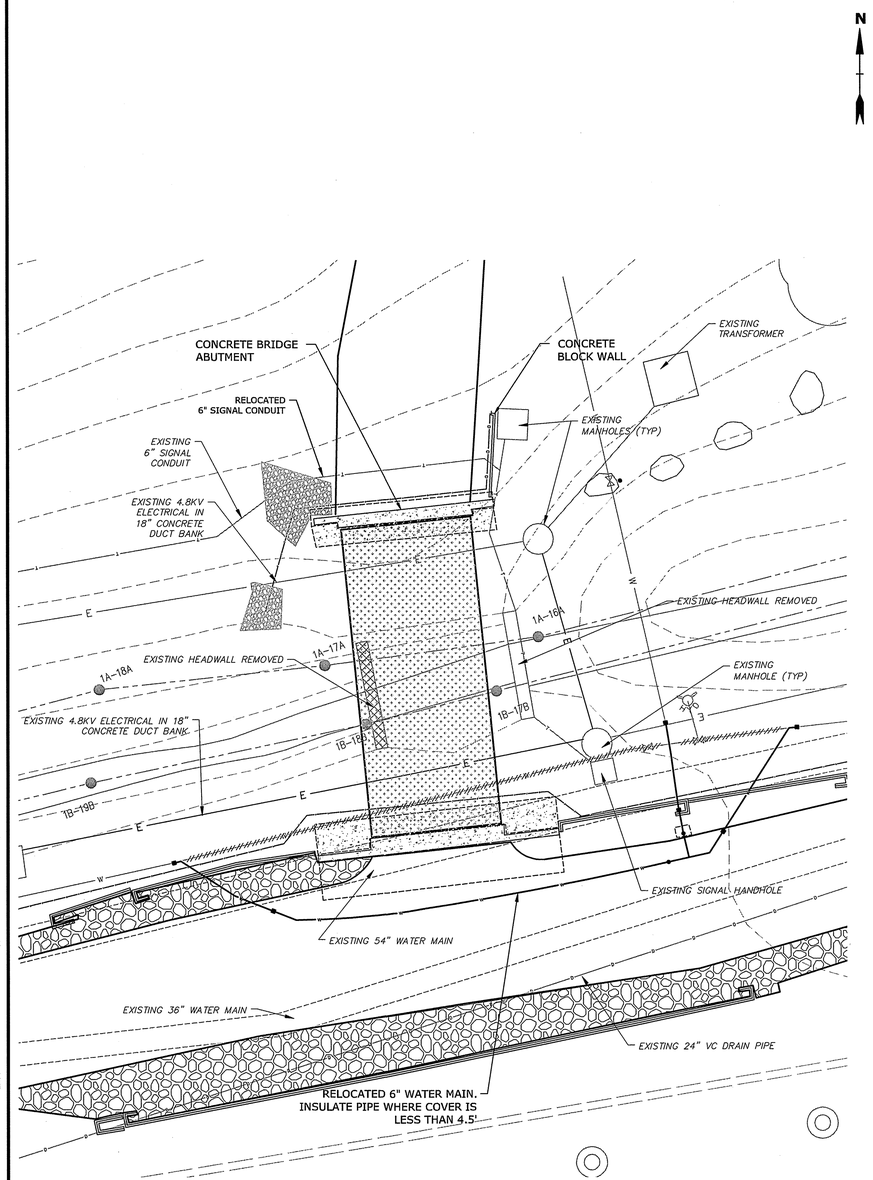

ENLARGED UTILITY LAYOUT
1" = 10'-0"

NOTES:

1. EXISTING TOPOGRAPHICAL CONDITIONS WERE DEVELOPED FROM THE FEBRUARY 11, 2005 TOPOGRAPHICAL SURVEY TITLED 'EXISTING CONDITIONS PLAN - WEST PARISH WATER TREATMENT PLANT' AND PREPARED BY CHAS H. SELLS, INC. - NASHUA, NH AND SUPPLEMENTED WITH OBSERVATIONS TAKEN IN THE FIELD. THE HORIZONTAL DATUM REFERENCED IS NAD83 AND THE VERTICAL DATUM IS NAV88. CONTOURS SHOWN ON THIS DRAWING ARE FROM THE CHAS SELLS SURVEY. STRUCTURE LOCATIONS WERE SUPPLEMENTED BY A SURVEY PROVIDED BY LUDLOW CONSTRUCTION CO. ON SEPTEMBER 12, 2019.
2. REFER TO SHEET C-002A FOR DETAILED ELEVATION INFORMATION.

RECORD DRAWING

THIS RECORD DRAWING WAS PREPARED BASED ON AS-BUILT INFORMATION PROVIDED BY THE CONTRACTOR AND INDICATES ONLY SIGNIFICANT CHANGES MADE FROM THE DESIGN DRAWINGS DURING CONSTRUCTION.

Tighe&Bond
www.tighebond.com

COMMONWEALTH OF MASSACHUSETTS
ELIZABETH G. BALDWIN
CIVIL
No. 41618
REGISTERED PROFESSIONAL ENGINEER
10/31/19

WPF Bridge #3 Project

Springfield Water & Sewer Commission

Westfield, MA

MARK	DATE	DESCRIPTION
1	10/31/2019	RECORD DRAWING
0	6/5/2018	ISSUED FOR CONSTRUCTION

PROJECT NO:	S2057-020
DATE:	09/18/2019
FILE:	S2057-020-C-RECORD DRAWING.dwg
DRAWN BY:	TJG, CFY
CHECKED:	EGB
APPROVED:	EGB, PJG

SITE GRADING PLAN

SCALE: AS SHOWN

C-002

Last Saved: 10/31/2019
Plotted On: 10/31/2019 11:24am By: CFY
Tighe & Bond:J:\S\S2057 SWSC\020 - WPF Temporary Bridge\Drawings_Figures\AutoCAD\Record Drawings\S2057-020-C-RECORD DRAWING.dwg

ENLARGED DETAIL
WPF 54" STEEL WATER MAIN REPAIR AT BRIDGE #3
1" = 5'

NOTE:
1. THE 54" STEEL WATER MAIN WAS DAMAGED DURING DRILLING OPERATIONS AND WAS REPAIRED ON MAY 18, 2018 USING (2) ⅜"x18"x18" STEEL PLATES AT EACH BORE AREA.
2. DEPTH TO CROWN OF 54" PIPE IS 8.5' AT REPAIR LOCATIONS.

NOTES:
1. 6" CI DEAD ENDS PLUGGED WITH CEMENT.
2. EVERY NEW JOINT BONDED WITH (2) #6 OR (1) #4 AWG.

ENLARGED DETAIL
WPF 6" PLANT WATER RELOCATION AT BRIDGE #3
1" = 10'

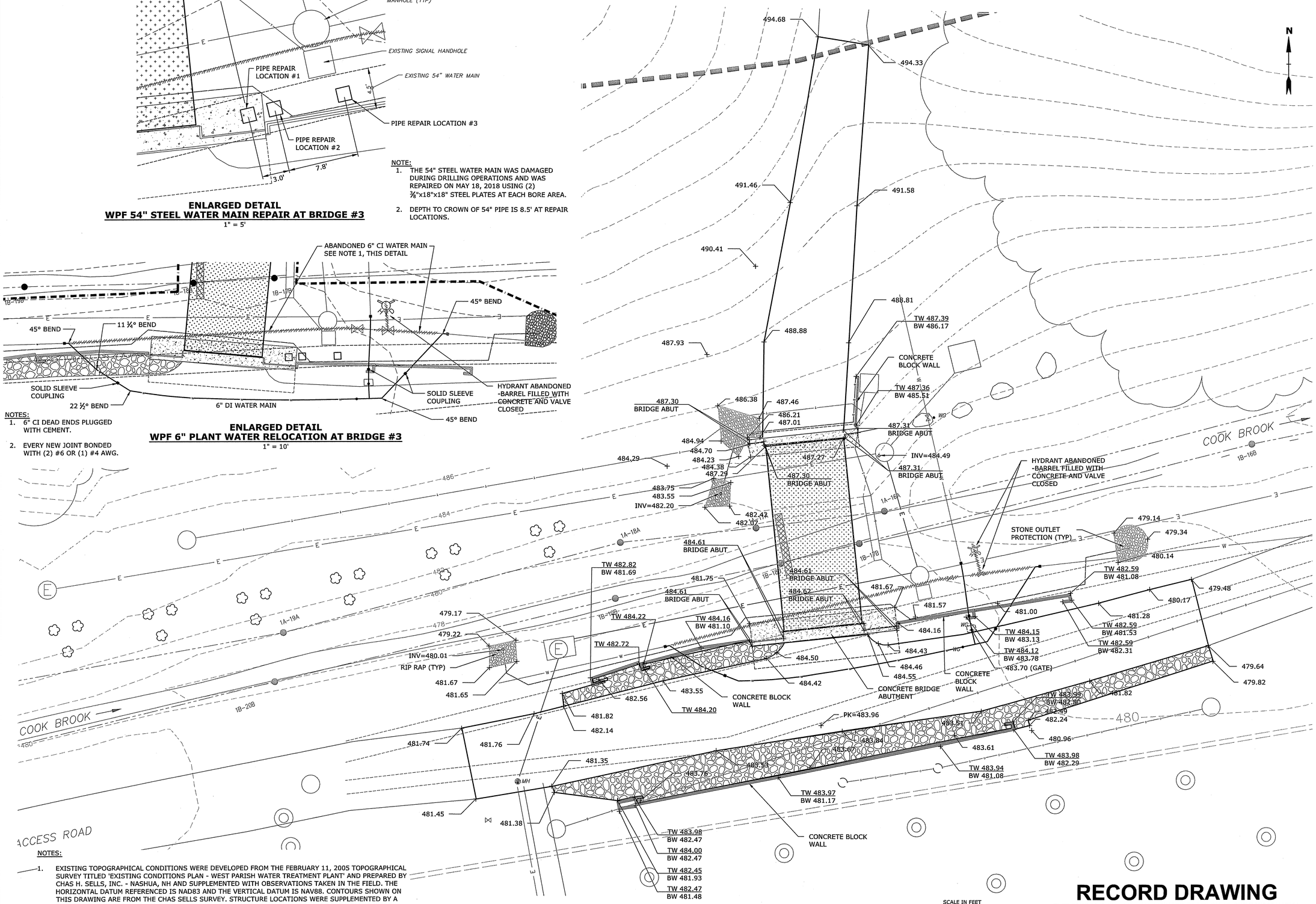

NOTES:
1. EXISTING TOPOGRAPHICAL CONDITIONS WERE DEVELOPED FROM THE FEBRUARY 11, 2005 TOPOGRAPHICAL SURVEY TITLED 'EXISTING CONDITIONS PLAN - WEST PARISH WATER TREATMENT PLANT' AND PREPARED BY CHAS H. SELLS, INC. - NASHUA, NH AND SUPPLEMENTED WITH OBSERVATIONS TAKEN IN THE FIELD. THE HORIZONTAL DATUM REFERENCED IS NAD83 AND THE VERTICAL DATUM IS NAV88. CONTOURS SHOWN ON THIS DRAWING ARE FROM THE CHAS SELLS SURVEY. STRUCTURE LOCATIONS WERE SUPPLEMENTED BY A SURVEY PROVIDED BY LUDLOW CONSTRUCTION CO. ON SEPTEMBER 12, 2019. SPOT ELEVATIONS WERE ALSO PROVIDED BY THE LUDLOW CONSTRUCTION SURVEY.
2. RAW WATER MAIN REPAIR AND 6" WATER LINE ABANDONMENT DETAILS PROVIDED BY SWSC.

RECORD DRAWING
THIS RECORD DRAWING WAS PREPARED BASED ON AS-BUILT INFORMATION PROVIDED BY THE CONTRACTOR AND INDICATES ONLY SIGNIFICANT CHANGES MADE FROM THE DESIGN DRAWINGS DURING CONSTRUCTION.

Tighe&Bond
www.tighebond.com

COMMONWEALTH OF MASSACHUSETTS
ELIZABETH G. BALDWIN
CIVIL
No. 41618
REGISTERED PROFESSIONAL ENGINEER
10/31/19

WPF Bridge #3 Project

Springfield Water & Sewer Commission

Westfield, MA

MARK	DATE	DESCRIPTION
1	10/31/2019	RECORD DRAWING
0	6/5/2018	ISSUED FOR CONSTRUCTION

PROJECT NO:	S2057-020
DATE:	09/18/2019
FILE:	S2057-020-C-RECORD DRAWING.dwg
DRAWN BY:	TJG
CHECKED:	EGB
APPROVED:	EGB, PJG

SITE GRADING PLAN EXPANDED VIEW

SCALE: 1" = 10'

C-002A

Last Saved: 10/31/2019
Plot Date: 10/31/2019 1:24pm By: CPY
Tighe & Bond:J:\S\S2057 SWSC\020 - WPF Temporary Bridge\Drawings_Figures\AutoCAD\Record Drawings\S2057-020-C-RECORD DRAWING.dwg

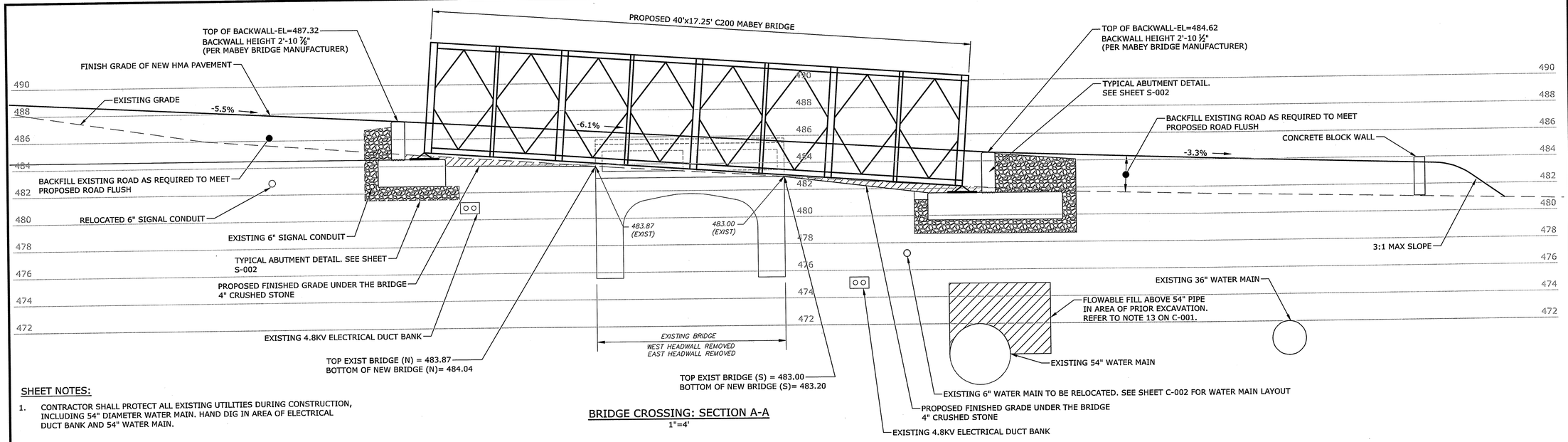

BRIDGE CROSSING: SECTION A-A
1"=4'

SHEET NOTES:

1. CONTRACTOR SHALL PROTECT ALL EXISTING UTILITIES DURING CONSTRUCTION, INCLUDING 54" DIAMETER WATER MAIN. HAND DIG IN AREA OF ELECTRICAL DUCT BANK AND 54" WATER MAIN.

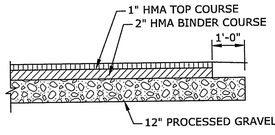

NOTE:
TAMP EDGES WHERE PAVING ABUTS LAWNS

HMA ACCESS ROAD
NO SCALE

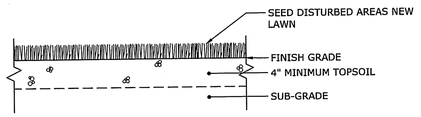

LAWN AREAS
NO SCALE

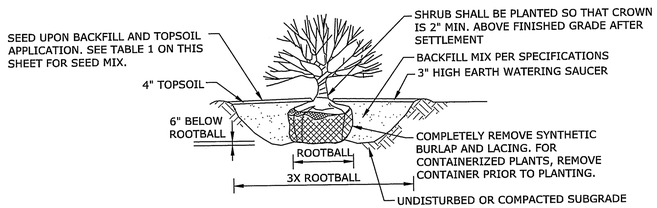

NOTES:
1. RAISE AND REPLANT ANY SHRUBS WHICH SETTLE MORE THAN 2" AFTER PLANTING AND WATERING IN.
2. SHRUBS SHALL BE SET PLUMB.
3. WATER BY FLOODING TWICE IN FIRST TWO HOURS AFTER PLANTING. WATER AND MAINTAIN AS PER STANDARD SPECIFICATIONS.
4. LOOSE OR CRACKED ROOTBALLS WILL NOT BE ACCEPTED FOR PLANTING.

SHRUB PLANTING DETAIL
NO SCALE

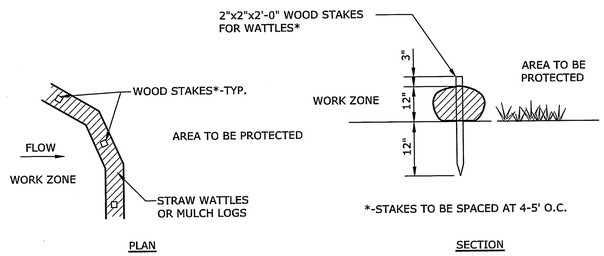

PLAN SECTION

EROSION CONTROL BARRIER
NO SCALE

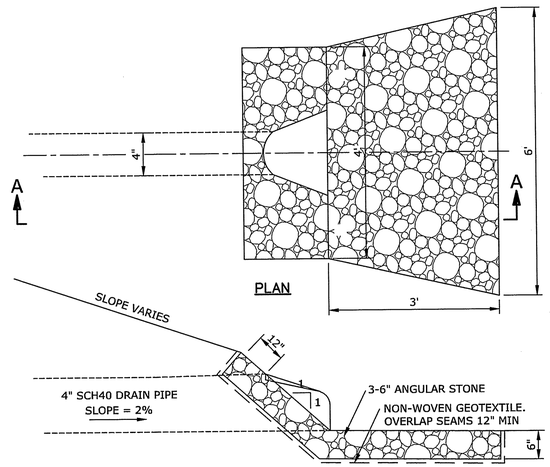

PLAN

SECTION A–A

STONE ARMOR AT OUTLETS
NO SCALE

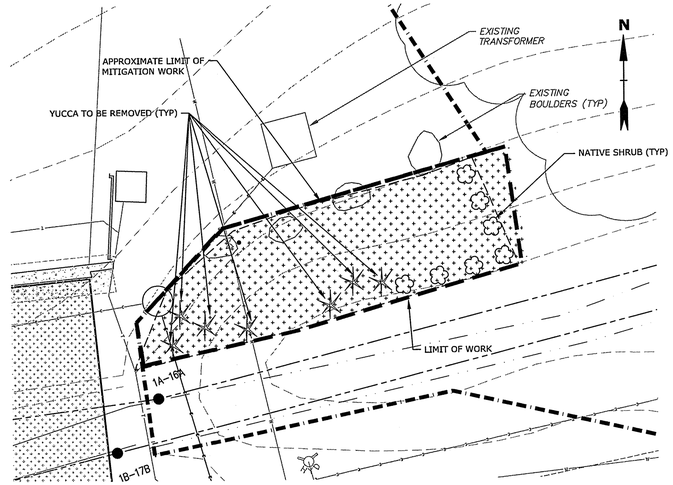

NOTES:
1. LIMITS OF MITIGATION SHALL BE STAKED IN THE FIELD.
2. SWSC WILL CEASE ALL MOWING/CUTTING ACTIVITIES WITHIN THE MITIGATION AREA.
3. INSTALL SIX (6) SHRUBS WITHIN THE MITIGATION AREA (SEE TABLE 1 BELOW).

RIVERFRONT AREA MITIGATION
SCALE: 1" = 20'

TABLE 1
Native Shrubs for Riverfront Mitigation Along Cook Brook at Bridge #3[1]

Common Name	Scientific Name	SIZE[2]
Bayberry	*Morella pensyylvanica*	3'- 4'
Bearberry	*Arctostaphylos uva-ursi*	6 - 12"
Low-Bush Blueberry	*Vaccinium augustifolium*	18 - 24"
Northern Bush Honeysuckle	*Diervilla lonicera*	18 - 24"
Sweet Fern	*Comptonia peregrina*	3'- 4'

[1] Shrubs to be selected from the species listed in this table based on the availability of native nursery stock at the time of installation.
[2] Minimum size (height) at time of installation.

RECORD DRAWING
THIS RECORD DRAWING WAS PREPARED BASED ON AS-BUILT INFORMATION PROVIDED BY THE CONTRACTOR AND INDICATES ONLY SIGNIFICANT CHANGES MADE FROM THE DESIGN DRAWINGS DURING CONSTRUCTION.

Tighe&Bond
www.tighebond.com

COMMONWEALTH OF MASSACHUSETTS
ELIZABETH G. BALDWIN
CIVIL
No. 41618
REGISTERED PROFESSIONAL ENGINEER
10/3/19

WPF Bridge #3 Project

Springfield Water & Sewer Commission

Westfield, MA

MARK	DATE	DESCRIPTION
1	10/31/2019	RECORD DRAWING
0	6/5/2018	ISSUED FOR CONSTRUCTION

PROJECT NO:	S2057-020
DATE:	04/03/2018
FILE:	S2057-020-C-003.dwg
DRAWN BY:	TJG
CHECKED:	DLL
APPROVED:	EGB, PJG

SITE PLAN SECTION & DETAILS

SCALE: AS NOTED

C-003

Last Saved: 10/31/2019
Printed: Oct 31, 2019 - 1:25pm By: CFY
Tighe & Bond: J:\S\S2057 SWSC\020 - WPF Temporary Bridge\Drawings_Figures\AutoCAD\Record Drawings\S2057-020-C-003.dwg

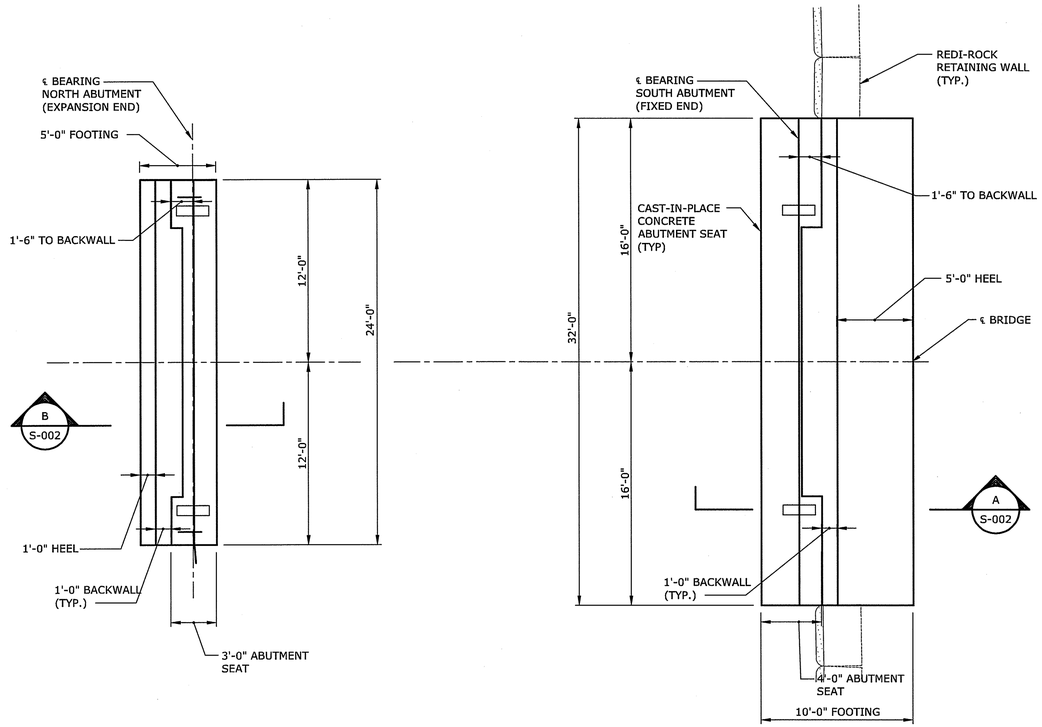

SUBSTRUCTURE PLAN
SCALE: 1" = 5'

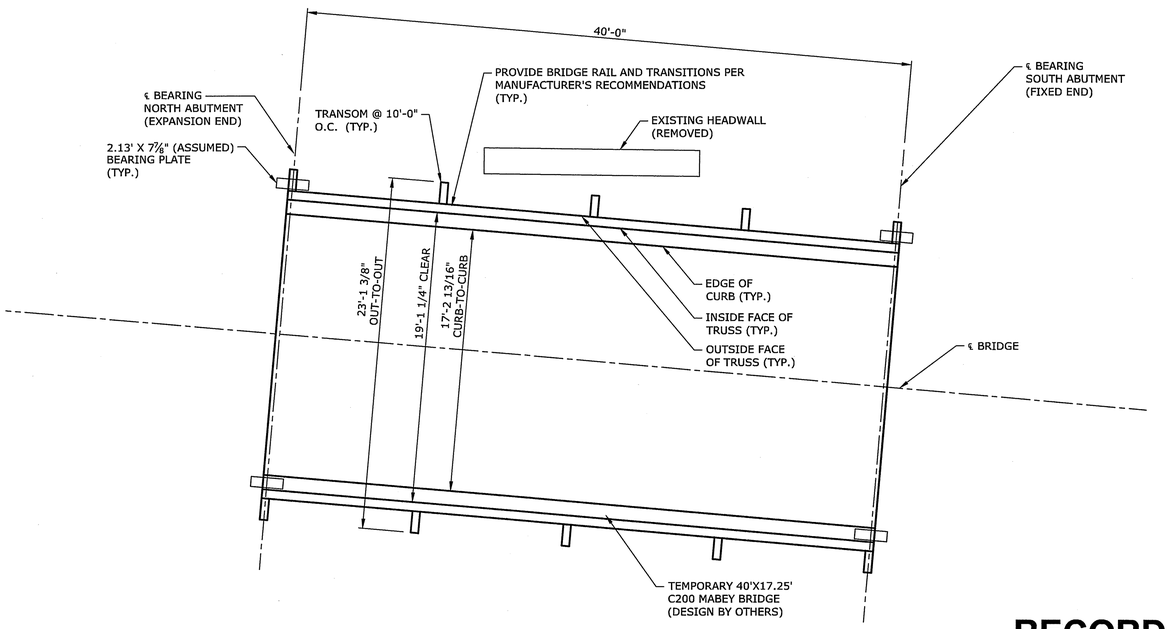

SUPERSTRUCTURE PLAN
SCALE: 1" = 5'

RECORD DRAWING

THIS RECORD DRAWING WAS PREPARED BASED ON AS-BUILT INFORMATION PROVIDED BY THE CONTRACTOR AND INDICATES ONLY SIGNIFICANT CHANGES MADE FROM THE DESIGN DRAWINGS DURING CONSTRUCTION.

DESIGN LOADS AND SPECIFICATIONS:

1. DESIGN LOADING:	HL-93
2. DESIGN METHOD:	LOAD AND RESISTANCE FACTOR DESIGN (LRFD)
3. SPECIFICATIONS:	AASHTO LRFD BRIDGE DESIGN SPECIFICATIONS, 8TH ED., 2018 AS AMENDED MASSDOT 1988 STANDARD SPECIFICATIONS AS AMENDED MASSDOT LRFD BRIDGE MANUAL, 2013 EDITION
4. FOUNDATION DATA:	NORTH ABUTMENT: CAST-IN-PLACE CONCRETE FOOTING SUPPORTED ON CRUSHED STONE ON FILL WITH A NOMINAL BEARING RESISTANCE OF 15.4 KSF IN COMBINATION WITH A RESISTANCE FACTOR OF 0.45. SOUTH ABUTMENT: CAST-IN-PLACE CONCRETE FOOTING SUPPORTED ON CRUSHED STONE WITH A NOMINAL BEARING RESISTANCE OF 15.4 KSF IN COMBINATION WITH A RESISTANCE FACTOR OF 0.45, OVER EXISTING 54" WATER MAIN WITH ALLOWABLE BEARING PRESSURE OF 3.0 KSF (ASD). FLOWABLE FILL TO BE PLACED OVER 54" PIPE IN ACCORDANCE WITH SECTION A-A ON C-003. RETAINING WALLS: REDI-ROCK MODULAR BLOCKS SUPPORTED ON CRUSHED STONE ON FILL WITH A NOMINAL BEARING RESISTANCE OF 15.4 KSF IN COMBINATION WITH A RESISTANCE FACTOR OF 0.45.
5. REINFORCING STEEL:	AASTHO M31 (ASTM A 615) GRADE 60 (M8.01.0)
6. CONCRETE:	CAST-IN-PLACE ABUTMENTS: 5000 PSI ¾, 685 HP CEMENT CONCRETE (M4.06.1) MODULAR BLOCKS (REDI-ROCK BLOCKS): 4000 PSI (PER REDI-ROCK SPECIFICATIONS)
7. SEISMIC:	PEAK GROUND ACCELERATION (PGA) = 0.06g SITE CLASS = C SEISMIC DESIGN CATEGORY (SDC) = A

PREFABRICATED BRIDGE NOTES:

1. CROSSINGS DESIGNED BASED ON OWNER'S PREFERENCE OF MABEY BRIDGE.
2. MANUFACTURER SHALL BE RESPONSIBLE FOR DESIGN OF PREFABRICATED TRUSS BRIDGE SUPERSTRUCTURE, RAILS, AND BEARINGS.
3. THE CONTRACTOR SHALL SUBMIT SHOP DRAWINGS, DESIGN CALCULATIONS, AND LOAD RATING CALCULATIONS FOR PREFABRICATED BRIDGE, SEALED AND SIGNED BY A CURRENT REGISTERED MASSACHUSETTS PROFESSIONAL ENGINEER, FOR REVIEW AND APPROVAL PRIOR TO FABRICATION.
4. MAXIMUM ALLOWABLE LIVE LOAD DEFLECTION SHALL BE L/800.
5. BRIDGE SHALL HAVE POSITIVE CAMBER AFTER ALL DEAD LOAD IS APPLIED.
6. TRUSS SUPERSTRUCTURE SHALL HAVE A MILL FINISH.
7. SUBSTRUCTURE ELEMENTS DESIGNED TO SUPPORT MABEY SUPERSTRUCURE. ASSUMED LOADS, PROVIDED FOR C200-17.2 TYPE SUPERSTRUCTURES BY MABEY BRIDGE AND ARE LISTED IN THE FOLLOWING TABLE. CONTRACTOR SHALL NOTIFY ENGINEER IF DESIGN ASSUMPTIONS DEVIATE FROM THE FOLLOWING:

SUPERSTRUCTURE LOADS (ASSUMED)	
DC	10 KIPS PER BEARING
DW	5 KIPS PER BEARING
LL	60 KIPS (MAX), 30 KIPS (MIN) PER BEARING
EXPOSED AREA (FOR WIND)	2.93 SQ. FT. PER FT.

8. THE CONFIGURATION OF THE ASSUMED SUPERSTRUCTURE IS DIMENSIONED ON SHEETS S-001 AND S-002.

FOUNDATION NOTES:

1. CONCRETE SHALL NOT BE PLACED IN WATER OR ON FROZEN GROUND.
2. BOTTOM OF FOUNDATION ELEVATIONS PROVIDED ON DRAWINGS SHALL BE CONSIDERED MINIMUM DEPTHS. CONTRACTOR SHALL REMOVE UNSUITABLE MATERIAL AS REQUIRED.
3. ALL EXCAVATIONS FOR FOOTINGS SHALL BE FINISHED BY HAND FOR THE LAST 6". ALL FINISHED EXCAVATIONS SHALL BE INSPECTED BY THE ENGINEER PRIOR TO ANY CONCRETE PLACEMENT.
4. ALL BACKFILL UNDER OR ADJACENT TO ANY PORTION OF THE STRUCTURE SHALL BE PLACED IN ACCORDANCE WITH MASSDOT STANDARD SPECIFICATIONS.

REDI-ROCK MODULAR BLOCK NOTES:

1. THE CONTRACTOR SHALL SUBMIT SHOP DRAWINGS, DESIGN CALCULATIONS, AND LOAD RATING CALCULATIONS FOR REDI-ROCK MODULAR BLOCKS, SEALED AND SIGNED BY A CURRENT REGISTERED MASSACHUSETTS PROFESSIONAL ENGINEER, FOR REVIEW AND APPROVAL PRIOR TO FABRICATION.
2. WALLS SHALL BE DESIGNED PER AASHTO LRFD BRIDGE DESIGN SPECIFICATIONS AND SHALL CONSIDER VEHICULAR SURCHARGE LOADS.
3. BLOCK SIZES SHALL BE DETERMINED BY THE DESIGNER.
4. CONCRETE MIX AND CONSTRUCTION SPECIFICATIONS SHALL MEET REDI-ROCK SPECIFICATIONS, SECTION 32 32 16 PRECAST MODULAR BLOCK RETAINING WALL, DATED 5/2/2017, UNLESS OTHERWISE NOTED.
5. FINAL BACKWALL CONFIGURATION SHALL BE COORDINATED WITH THE MABEY BRIDGE. REDI-ROCK BACKWALLS SHALL BE CONSTRUCTED AFTER SUPERSTRUCTURE IS SET IN PLACE.
6. GEOGRID OR TIEBACKS SHALL NOT BE PLACED OVER UTILITIES.
7. THE ENGINEER RESERVES THE RIGHT TO REJECT DEFECTIVE UNITS WHICH ARE IN HIS/HER OPINION UNSATISFACTORY UNLESS AND UNTIL THEY ARE SATISFACTORILY REPAIRED.
8. REDI-ROCK WALL SHALL NOT IMPACT EXISTING UTILITIES TO REMAIN IN PLACE INCLUDING ELECTRICAL DUCT BANK AND WATER MAIN.

Tighe&Bond
www.tighebond.com

COMMONWEALTH OF MASSACHUSETTS
ELIZABETH G. BALDWIN
CIVIL
No. 41618
REGISTERED PROFESSIONAL ENGINEER
10/31/19

WPF Bridge #3 Project

Springfield Water & Sewer Commission

Westfield, MA

MARK	DATE	DESCRIPTION
1	10/31/2019	RECORD DRAWING
0	6/5/2018	ISSUED FOR CONSTRUCTION

PROJECT NO:	S2057-020
DATE:	05/07/2018
FILE:	Structural-Plans 20190926_record.dwg
DRAWN BY:	TJG/EAO
CHECKED:	AML/CSF
APPROVED:	EGB/PJG

SUBSTRUCTURE PLAN, SUPERSTRUCURE PLAN, AND STRUCTURAL NOTES

SCALE: 1" = 5'

S-001

Last Saved:10/31/2019
Plotted On:Oct 31, 2019-1:25pm By: CPV
Tighe & Bond:\S\S2057-20\S2057-020 -WPF Temporary Bridge\Drawings_Figures\AutoCAD\Record Drawings\Structural-Plans 20190926_record.dwg

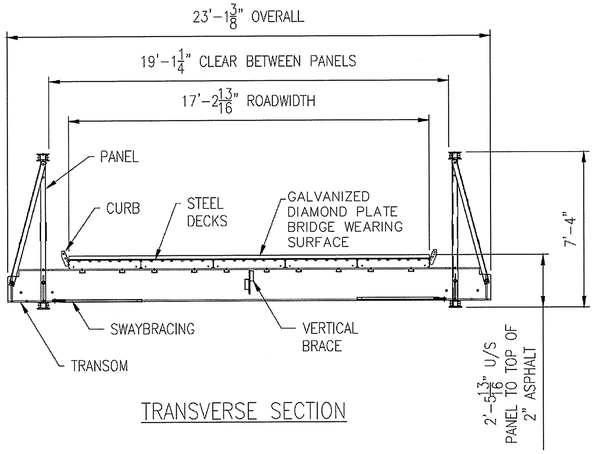

TRANSVERSE SECTION

TYPICAL BRIDGE SECTION (BY OTHERS)

NO SCALE

TYPICAL BRIDGE SECTION NOTES:

1. PER MABEY MANUFACTURER, HEIGHT FROM UNDERSIDE OF BEARING TO UNDERSIDE OF PANEL (SHOWN ABOVE) EQUALS 6 ¼", REQUIRING A BACKWALL HEIGHT EQUAL TO 3'-0".
2. TYPICAL BRIDGE SECTION PROVIDED BY MABEY BRIDGE MANUFACTURER.
3. BRIDGE RAIL SHALL BE PROVIDED PER MANUFACTURER'S RECOMMENDATIONS, NOT SHOWN FOR CLARITY.

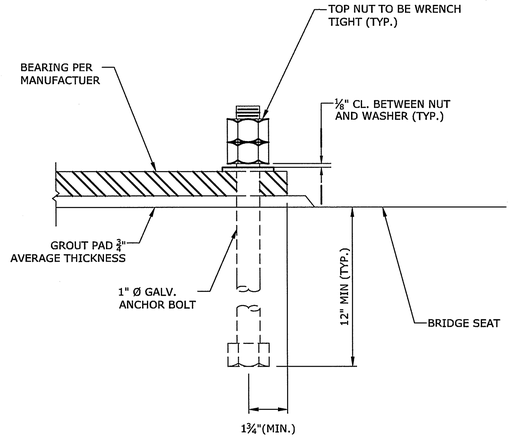

TYPICAL BEARING DETAIL

NO SCALE

TYPICAL BEARING NOTES:

1. ANCHOR BOLT HOLES IN CONCRETE SHALL HAVE A DIAMETER AT LEAST 1" LARGER THAN THAT OF THE ANCHOR BOLT.
2. ANCHOR BOLTS SHALL BE LOCATED 6" (MIN.) FROM FACE OF ABUTMENT OR FACE OF GROUT PAD.
3. GROUT SHALL BE HIGH QUALITY, NON-SHRINK, CEMENTITIOUS, AND NON-METALLIC.

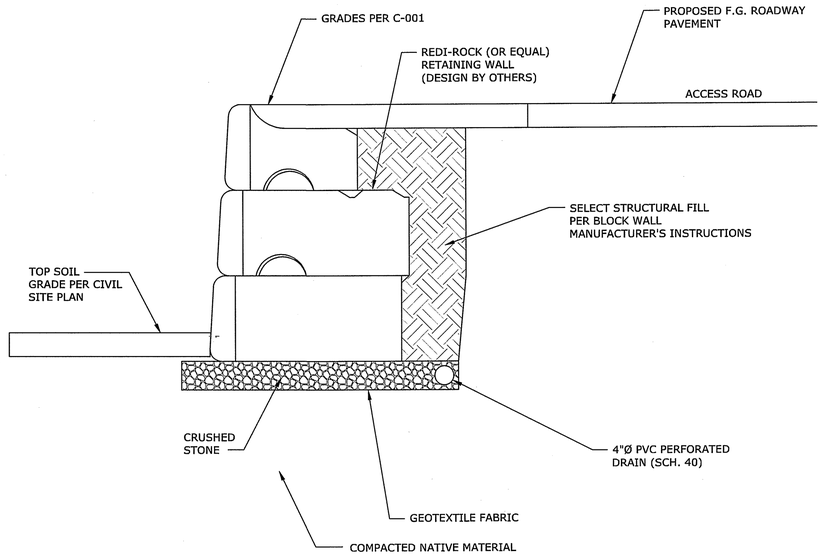

TYPICAL RETAINING WALL DETAIL

NO SCALE

TYPICAL RETAINING WALL DETAIL NOTES:

1. ELEVATION ON STREAM SIDE OF RETAINING WALL VARIES TO MATCH EXISTING GRADE.

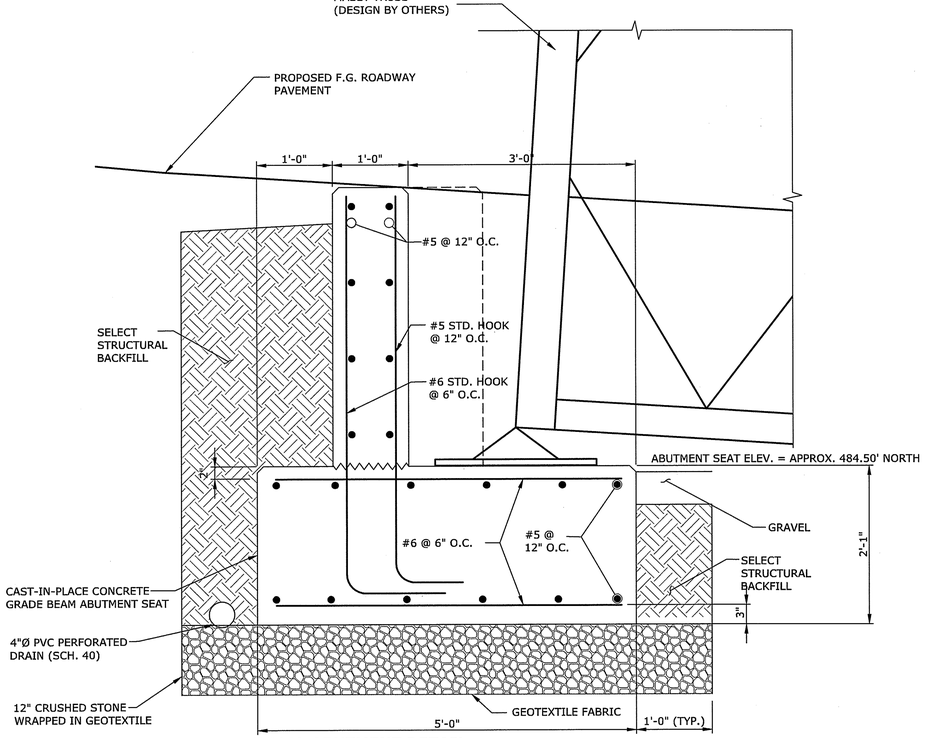

TYPICAL ABUTMENT DETAIL

SECTION B / S-001

NO SCALE

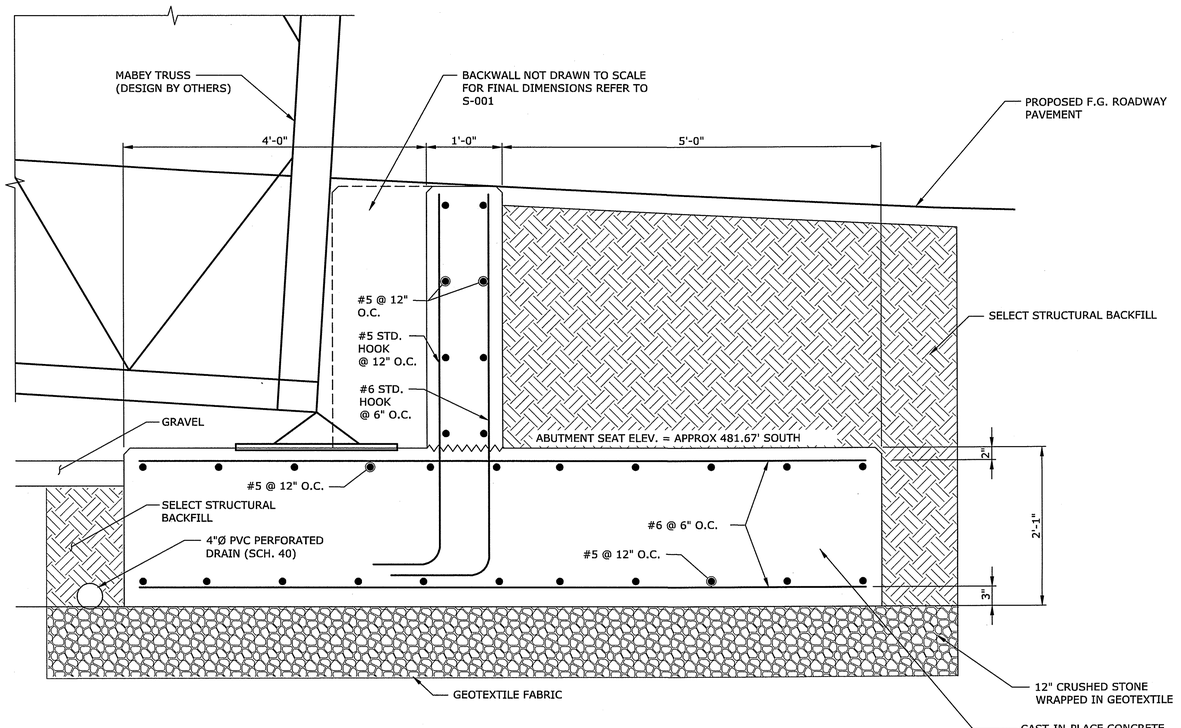

TYPICAL ABUTMENT DETAIL

SECTION A / S-001

NO SCALE

RECORD DRAWING

THIS RECORD DRAWING WAS PREPARED BASED ON AS-BUILT INFORMATION PROVIDED BY THE CONTRACTOR AND INDICATES ONLY SIGNIFICANT CHANGES MADE FROM THE DESIGN DRAWINGS DURING CONSTRUCTION.

Tighe&Bond
www.tighebond.com

COMMONWEALTH OF MASSACHUSETTS
ELIZABETH G. BALDWIN
CIVIL
No. 41618
REGISTERED PROFESSIONAL ENGINEER
10/31/19

WPF Bridge #3 Project

Springfield Water & Sewer Commission

Westfield, MA

MARK	DATE	DESCRIPTION
1	10/31/2019	RECORD DRAWING
0	6/5/2018	ISSUED FOR CONSTRUCTION

PROJECT NO:	S2057-020
DATE:	05/07/2018
FILE:	Structural-Plans 20190926_record.dwg
DRAWN BY:	TJG/EAO
CHECKED:	AML/CSF
APPROVED:	EGB/PJG

STRUCTURAL DETAILS

SCALE: AS NOTED

S-002

Last Saved:10/31/2019
Plotted On:Oct 31, 2019 - 1:25pm By: CY
Tighe & Bond:\S2057-2\WSC\010 - WPF Temporary Bridge\Drawings_Figures\AutoCAD\Record Drawings\Structural-Plans 20190926_record.dwg

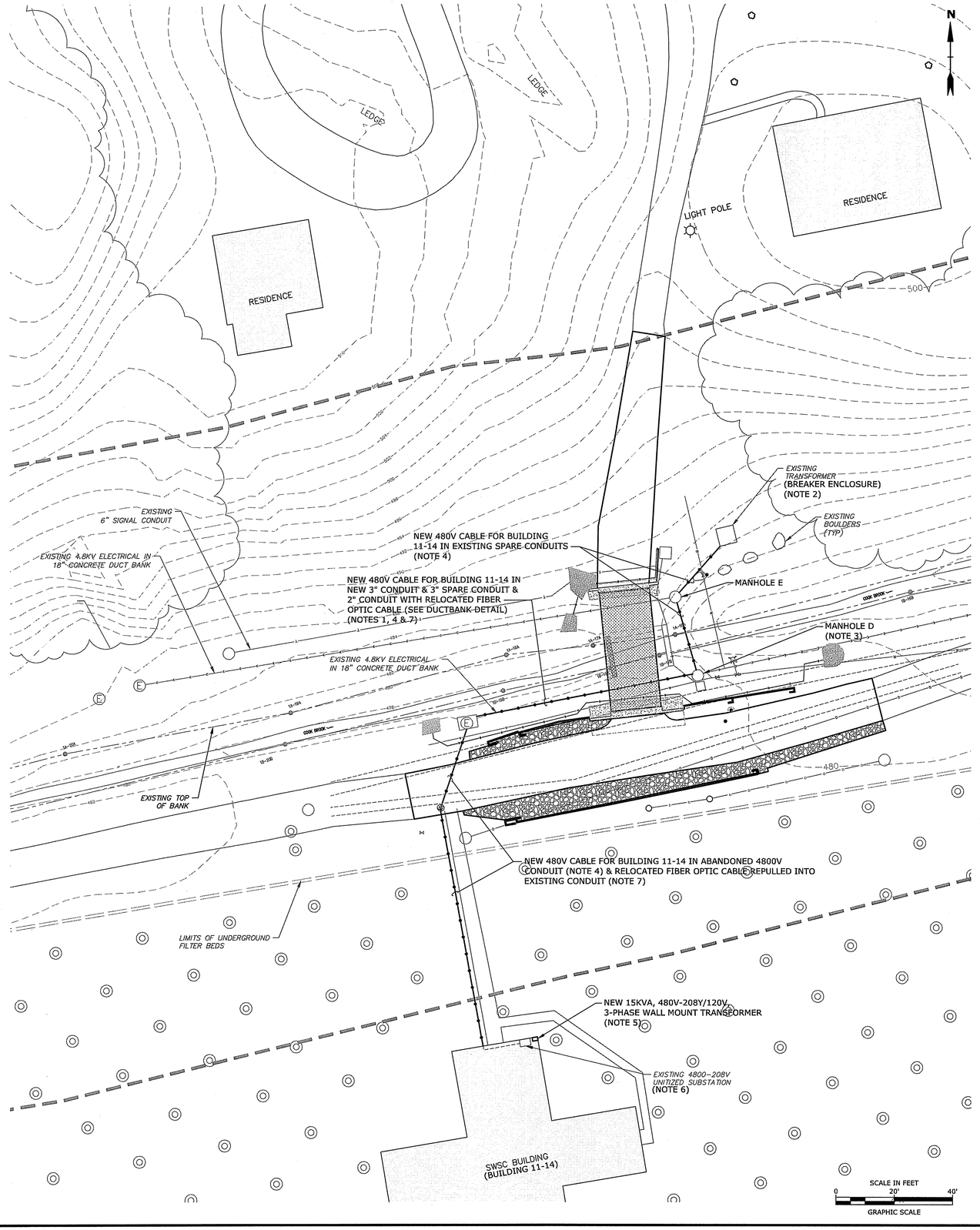

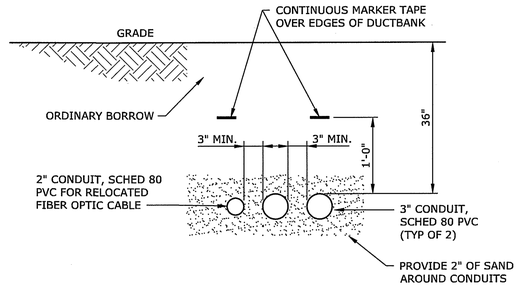

ELECTRICAL DUCTBANK DETAIL

TYPICAL FOR CONDUITS BETWEEN MANHOLES

NOTES:

1. PROVIDE TWO NEW 3", SCHEDULE 80 PVC CONDUITS FROM MANHOLE D TO THE UNMARKED MANHOLE (NORTH OF THE BUILDING 11-14, ACROSS THE ACCESS ROAD). SEE DUCT BANK DETAIL ON THIS SHEET. ONE CONDUIT SHALL BE USED FOR THE NEW 480V POWER WIRING FROM THE BREAKER ENCLOSURE TO BUILDING 11-14.
2. PROVIDE A NEW 25A, 3-POLE, 480V CIRCUIT BREAKER IN THE "BREAKER ENCLOSURE" (THIS IS A 4800-480V SUBSTATION WITH SPACES FOR ADDITIONAL 480V FEEDER BREAKERS) TO FEED BUILDING 11-14.
3. CURRENTLY, BUILDING 11-14 IS POWERED BY A 4800V CABLE THAT IS TAPPED OFF AN EXISTING 4800V FEEDER CABLE THAT ALSO POWERS THE WATERSHED BUILDING (OLD LAB) AND THE 42" BYPASS (VIA THE BREAKER ENCLOSURE). THE TAP IS LOCATED IN MANHOLE D. NO ONE SHALL ENTER THE MANHOLE WHEN ANY OF THE 4800 VOLT WIRING IN THE MANHOLE IS LIVE. COORDINATE WITH SWSC STAFF FOR A SHUTDOWN OF ALL BUILDINGS ON SITE. HAVE SWSC STAFF SHUT DOWN THE 4800V FEEDERS RUNNING THROUGH MANHOLE D.
   a. DISCONNECT AND REMOVE THE 4800V TAP WIRING THAT FEEDS BUILDING 11-14.
   b. USING A SUITABLE 5KV, WATER-TIGHT SPLICE KIT, RE-CONNECT AND FIRE WRAP THE REMAINING 4800V CIRCUIT WIRING IN MANHOLE D.
   c. PARTIALLY INSTALL NEW 480V FEEDER WIRING FOR BUILDING 11-14 (PER NOTE 4 BELOW) THROUGH THE 5KM MANHOLES (MANHOLE D AND MANHOLE E) SO THAT THE 4800V CIRCUITS CAN BE RE-ENERGIZED.
   d. ONCE ALL WORK IS COMPLETE MANHOLES THAT CONTAIN 4800V CIRCUITS, COORDINATE WITH SWSC STAFF TO RE-ENERGIZE THE REMAINING 4800 CIRCUITS.
4. PROVIDE NEW CABLE FOR THE 480V POWER FEED FROM THE NEW CIRCUIT BREAKER IN THE "BREAKER ENCLOSURE" TO THE NEW TRANSFORMER IN THE BUILDING 11-14. THE CABLE SHALL BE 3-CONDUCTOR PLUS GROUND, SIZE #10AWG, STRANDED CONDUCTORS, WITH XHHW INSULATION AND PVC JACKET. RUN THE NEW CABLE IN EXISTING AND ABANDONED SPARE CONDUITS WHERE SHOWN. USE THE NEWLY ABANDONED CONDUIT THAT ORIGINALLY CONTAINED THE 4800V POWER WIRING FOR BUILDING 11-14 WHERE SHOWN. THE EXISTING CONDUIT PENETRATES THE BUILDING FOUNDATION AND ENTERS A PULL BOX. FROM THAT PULL BOX, PROVIDE NEW 1-1/2" CONDUIT FOR THE CABLE TO THE NEW TRANSFORMER.
5. PROVIDE NEW TRANSFORMER AS SHOWN, MOUNTED 7 FEET ABOVE FLOOR, IN CORNER OF BUILDING 11-14 WHERE SHOWN. FASTEN THE TRANSFORMER TO THE WALL USING ALL STAINLESS STEEL HARDWARE AND ANCHOR BOLTS.
6. BUILDING 11-14 IS CURRENTLY POWERED VIA A 4800-208/120V SELF-CONTAINED SUBSTATION WITH AN INTEGRAL 208V DISTRIBUTION POWER PANEL (WITH MAIN CIRCUIT BREAKER). WITHIN THE SUBSTATION, DISCONNECT AND REMOVE THE INTERNAL POWER WIRING BETWEEN THE EXISTING 4800V-208/120V TRANSFORMER AND THE 208V POWER PANEL. CONNECT THE SECONDARY OF THE NEW 480V-208Y/120V TRANSFORMER TO THE MAIN BREAKER OF THE 208V POWER PANEL (IN THE SUBSTATION) USING 4#6 WIRES AND A #8 GROUND WIRE IN 1-1/2" CONDUIT. PROVIDE ALL REQUIRED TERMINALS, CONNECTORS, ETC.
7. THERE IS AN EXISTING FIBER OPTIC CABLE THAT CURRENTLY RUNS THROUGH A CONDUIT IN THE SAME DUCTBANK AS THE 4.8KV POWER FROM MANHOLE D TO BUILDING 11-14. PROVIDE A NEW 2", SCHEDULE 80 PVC CONDUIT FROM MANHOLE D TO THE UNMARKED MANHOLE (NORTH OF BUILDING 11-14, ACROSS THE ROAD). SEE DUCTBANK DETAIL ON THIS SHEET. DISCONNECT AND PULL BACK THE EXISTING FIBER OPTIC CABLE TO MANHOLE D, AND RE-PULL IT BACK TO THE CONNECTION POINT IN BUILDING 11-14 USING THE NEW 2" CONDUIT AND THE EXISTING CONDUITS AS SHOWN. RECONNECT THE FIBER OPTIC CABLE IN BUILDING 11-14.

RECORD DRAWING

THIS RECORD DRAWING WAS PREPARED BASED ON AS-BUILT INFORMATION PROVIDED BY THE CONTRACTOR AND INDICATES ONLY SIGNIFICANT CHANGES MADE FROM THE DESIGN DRAWINGS DURING CONSTRUCTION.

Tighe&Bond
www.tighebond.com

COMMONWEALTH OF MASSACHUSETTS
ELIZABETH G. BALDWIN
CIVIL
No. 41618
REGISTERED PROFESSIONAL ENGINEER
10/31/19

WPF Bridge #3 Project

Springfield Water & Sewer Commission

Westfield, MA

MARK	DATE	DESCRIPTION
1	10/31/2019	RECORD DRAWING
0	6/5/2018	ISSUED FOR CONSTRUCTION

PROJECT NO:	S2057-020
DATE:	09/18/2019
FILE:	S2057-020-E-001.dwg
DRAWN BY:	TJG, CFY
CHECKED:	EGB
APPROVED:	EGB, PJG

ELECTRICAL SITE PLAN

SCALE: 1"=20'

E-001

Last Saved: 10/31/2019
Printed: Oct 31, 2019 - 1:25pm By: CFY
Tighe & Bond: J:\S\S2057 SWSC\020 - WPF Temporary Bridge\Drawings_Figures\AutoCAD\Record Drawings\S2057-020-E-001.dwg

ADDENDUM No. 1

SPRINGFIELD WATER AND SEWER COMMISSION

ADDENDUM No. 1

TO
CONTRACT DOCUMENTS
FOR

IFB# 24-01 WEST PARISH FILTERS WATER TREATMENT PLANT 42 INCH RAW WATER CONVEYANCE REHABILITATION AND ENERGY DISSIPATION VALVE CHAMBER
WESTFIELD, MASSACHUSETTS 01201

Bidders are hereby notified of the following additions, deletions, and modifications to the Contract Documents for IFB# 24-01 42 Inch Raw Water Conveyance Rehabilitation and Energy Dissipation Valve Chamber.

Bidders shall acknowledge receipt of this Addendum in the space provided on the bid forms.

A. ANNOUNCEMENTS

See attached agenda and sign-in sheet for the Optional Pre-Bid Conference held on March 6, 2024, at the West Parish Filters Water Treatment Plant located at 1515 Granville Road, Westfield, MA.

B. QUESTIONS

Question 1: Is fuel storage and/or re-fueling allowed along pipeline route?

Response 1: Refueling along the pipeline route is allowed outside of wetland boundaries, streams (both intermittent and perennial), and dewatering areas. This applies to all areas up to 100 feet away from any Sedimentation Basin wetlands. Care should be taken when refueling upslope of these features. Fuel storage will not be allowed.

Question 2: What type of upstream isolation is provided at the inlet works to the pipeline?

Response 2: Record drawings of the inlet works valve vault showing work conducted in 2019 are provided as an attachment to this Addendum.

Question 3: What is the condition of the pipeline in terms of leakage?

Response 3: The inlet works valve vault contains 1 to 2 feet of water believed to be infiltration of groundwater combined with a faulty connection to the existing sump pump. The pipeline itself downstream of the inlet works is in good condition. There could be some

water infiltration in low spots along the pipeline such as near Manway 10. Some biofilm is also possible inside the pipeline making it slippery.

Question 4: Is there footage available of the inside of the pipeline?

Response 4: No video footage is available for the inside of the pipeline. AECOM's field inspection presentation dated February 10, 2021, is provided as an attachment to this addendum which includes photographs along the inside of the pipeline.

Question 5: Is the drone footage of the pipeline routing available?

Response 5: The drone footage can be accessed at the link provided below.

https://swsc.sharefile.com/d-s690c65b039c94fe9990f79f762347168

C. ATTACHMENTS

1.1 – Pre-bid Conference Sign-in Log
1.2 – Drawing M-3, 42-Inch Pipe Inlet Works Details, 2019
1.3 – AECOM Pipeline Field Inspection Presentation, February 10, 2021

END OF ADDENDUM

Attachment 1-1: Pre-Bid Conference Sign-in Sheet

SWSC 42-Inch Rehab and EDV Chamber			
Pre-Bid Conference Sign-In			
Wednesday, March 6, 2024			
Proper Name	**Company**	**Best Telephone No.**	**Email Address**
ROB NORRIS	STRUCTURAL	248-499-0623	rnorris@structuraltec.com
Aaron Key	Structural	860-637-3761	Akey@structural.net
David Gibson	STRUCTURAL Tech	443-829-7165	dgibson@structuraltec.com
Edgar Vidal	FERREIRA Construction	914-379 1937	evidal@ferreiraconstruction.com
JOHN FORD	FYFE	774-226-6938	JFORD@CS-NRI.COM
GREG MELLOR	COORDINATED SYSTEMS CONSULTING	860-835-5652	GMELLOR@COORDSYSTEMS.COM
Keith G Kruse	CSC	443 858 2760	Keith@Kruse.gurg
CHARLIE TRIPP	AECOM	774-218-4257	CHARLES.TRIPP@AECOM.COM
Dinis Baltazar	Baltazar Contractors	413-315-0374	dbaltazar@baltazarci.com
Bryan Pon	Structural	914-960-5108	bpon@structural.net
Joe Underkofler	Ludlow Construction	413-583-2522	Junderkofler@ludlowconstruction.com Pfragoso@ludlowconstruction.com
Michael Cronin	Insituform	413 346 8657	mcronin@aegion.com

Attachment 1-2: Drawing M-3, 42-Inch Pipe Inlet Works Details, 2019

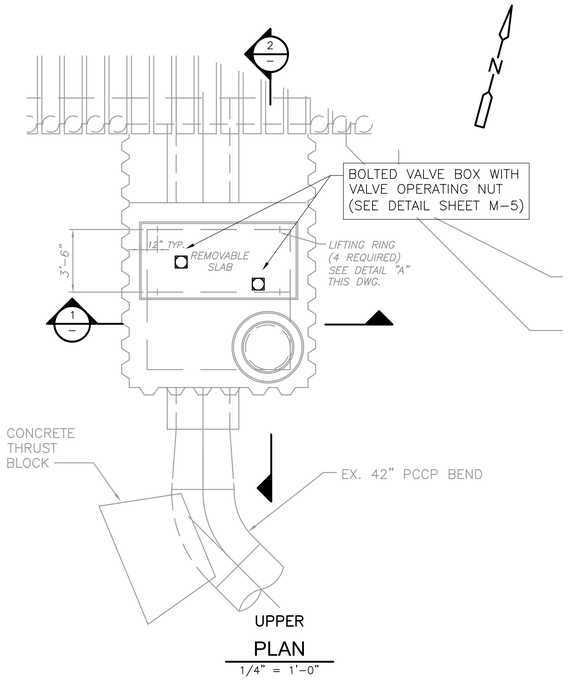

UPPER

PLAN

1/4" = 1'-0"

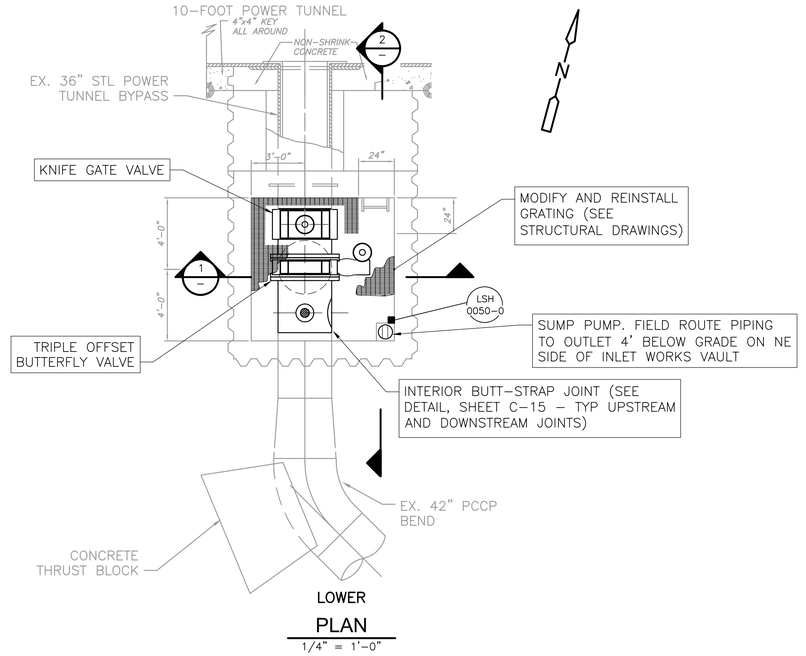

LOWER

PLAN

1/4" = 1'-0"

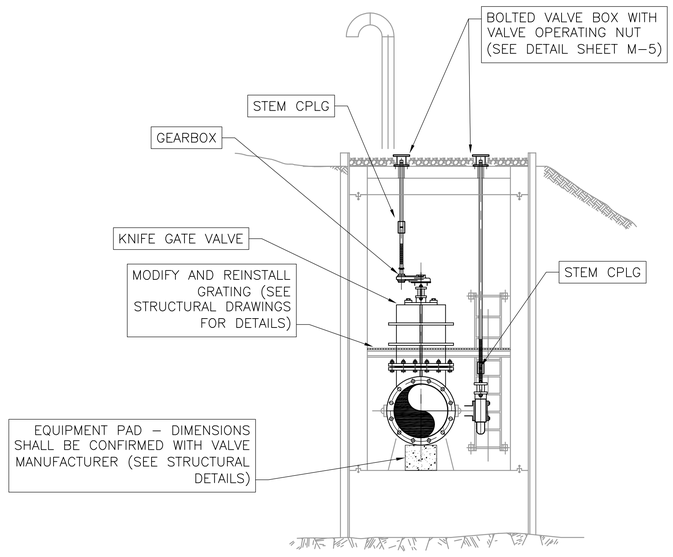

SECTION 1

1/4" = 1'-0"

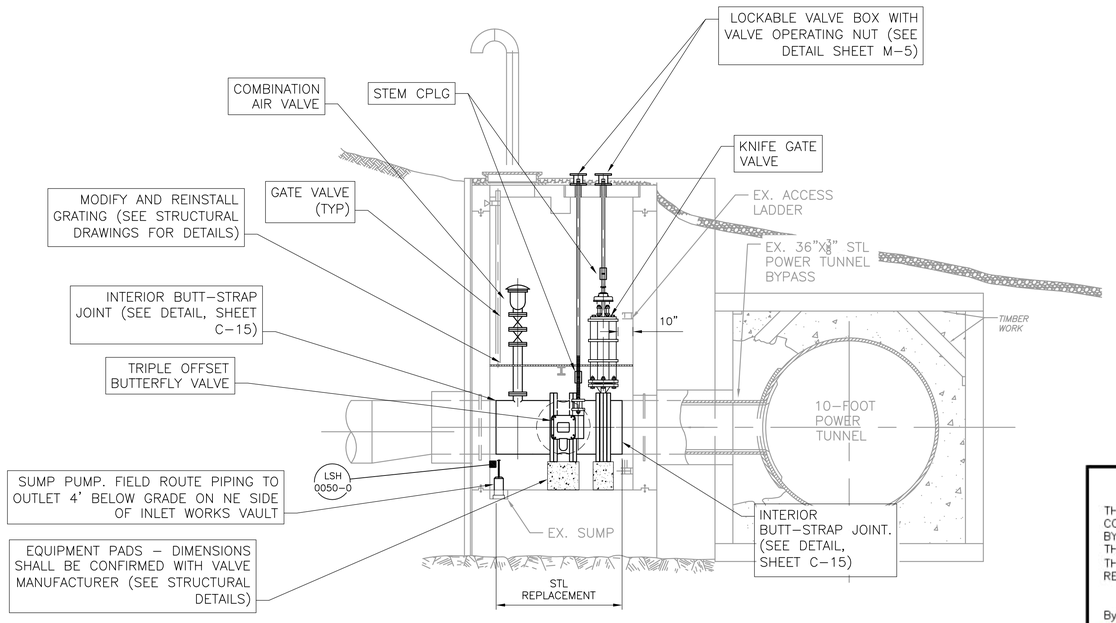

SECTION 2

1/4" = 1'-0"

RECORD DRAWING

THIS RECORD DRAWING HAS BEEN PREPARED BASED ON A COMBINATION OF INFORMATION PROVIDED BY OTHERS AND BY CDM SMITH. THEREFORE, THE ENGINEER HAS NOT VERIFIED THE ACCURACY OF ALL THE INFORMATION. TO THE BEST OF THE ENGINEER'S BELIEF AND KNOWLEDGE, THE INCLUDED RECORD INFORMATION IS REASONABLY ACCURATE.

By _____ Date 1-24-2020

CDM Smith

REV. NO.	DATE	DRWN	CHKD	REMARKS

DESIGNED BY: M. MIGLIORI
DRAWN BY: M. MIGLIORI
SHEET CHK'D BY: J. PESCATORE
CROSS CHK'D BY: B. HICKEY
APPROVED BY: M. MIGLIORI
DATE: AUGUST 2017

CDM Smith
75 State Street
Boston, MA 02109
Tel: (617) 452-6000

SPRINGFIELD WATER AND SEWER COMMISSION
SPRINGFIELD, MASSACHUSETTS
WEST PARISH FILTERS
RAW WATER CONVEYANCE SYSTEM IMPROVEMENTS

INLET WORKS
PLANS AND SECTIONS

PROJECT NO. 10946-217028
FILE NAME: M003VVPL.DWG

SHEET NO.
M-3

XREFs: [CDMS_2436, WWP002W, WWP002AV, WWS002W] Images: []
Last saved by: ODONNELLJT Time: 7/28/2017 12:12:39 PM
pw:\\pw.cdmsmith.com:PW_PL1\10946\217028\04 Design Services NM_60%\05 Process Mechanical\10 CADD\M003VVPL.dwg
©2017 CDM SMITH ALL RIGHTS RESERVED.
REUSE OF DOCUMENTS: THESE DOCUMENTS AND DESIGNS PROVIDED BY PROFESSIONAL SERVICE, INCORPORATED HEREIN, ARE THE PROPERTY OF CDM SMITH AND ARE NOT TO BE USED, IN WHOLE OR PART, FOR ANY OTHER PROJECT WITHOUT THE WRITTEN AUTHORIZATION OF CDM SMITH.

Attachment 1-3: AECOM Pipeline Field Inspection Presentation, February 10, 2021

SWSC 42-inch Diameter RWC PCCP

Internal Inspection Findings – Summary

February 10, 2021 (Rev. 3/8/24)

Mark C. Webb, Ph.D, P.E., F.ASCE
Discipline Lead - Pipeline Design & Condition Assessment

Presentation Outline

- Background & Purpose
- Pipeline Profile, Access Manways, Pressure Classes, Soil Cover
- Summary – Visual Pipe Observations (Profile View)
- Inspection of Old Manways
- Internal Inspection Days 1 to 5 (2 to 6 November 2020)
- External Inspection Days 6 to 8 (9 to 11 November 2020)
- Electromagnetic Results

Background

- The Raw Water Conveyance System (RWCS) is owned & operated by SWSC.
- It carries raw water from Cobble Mountain Reservoir to West Parish Water Filtration Plant in Westfield, MA.
- Pipeline is 42 in. diameter prestressed concrete cylinder pipe (PCCP):
  - Manufactured by Lock Joint Pipe Company in 1958.
  - 6 pressure classes
  - Lined cylinder pipe (LCP)
  - Embedded cylinder pipe (ECP)
  - Specials manufactured by Thompson Pipe in 2018 (new manways, pipe adapters)
  - Miller Pipeline (subcontractor to Ludlow Construction) repaired 323 joints (removal of loose joint mortar & surface corrosion on the steel joint ring, replacing interior joint mortar).
- Pure Technologies conducted visual, sounding, & electromagnetic (EM) inspections in 2012 & 2019.
  - Observed missing or spalled mortar at joints, noted circumferential & longitudinal cracking
  - Identified 4 (2012) & 7 (2019) distressed pipes with EM signals indicative of broken wires.

Purpose

- Perform internal pipe inspections:
  - Inspect manways (old & new).
  - Inspect pipe joints.
  - Document circumferential & longitudinal cracks.
  - Perform pipe sounding inspection.
  - Document other anomalies in pipes & joints.
- Perform external pipe inspections:
  - Inspect pipes of interest (POI) based on Pure/SGH/AECOM findings.
    - Visually inspect and document pipe exterior, joints & backfill material.
    - Perform sounding inspection on pipe exterior.
  - Perform pipe continuity testing on Pipe 7-57 (ECP175) to verify wire breaks.
- Perform soil conductivity / resistivity & stray current surveys.

Pipeline Profile, Access Manways, Pressure Classes, Soil Cover

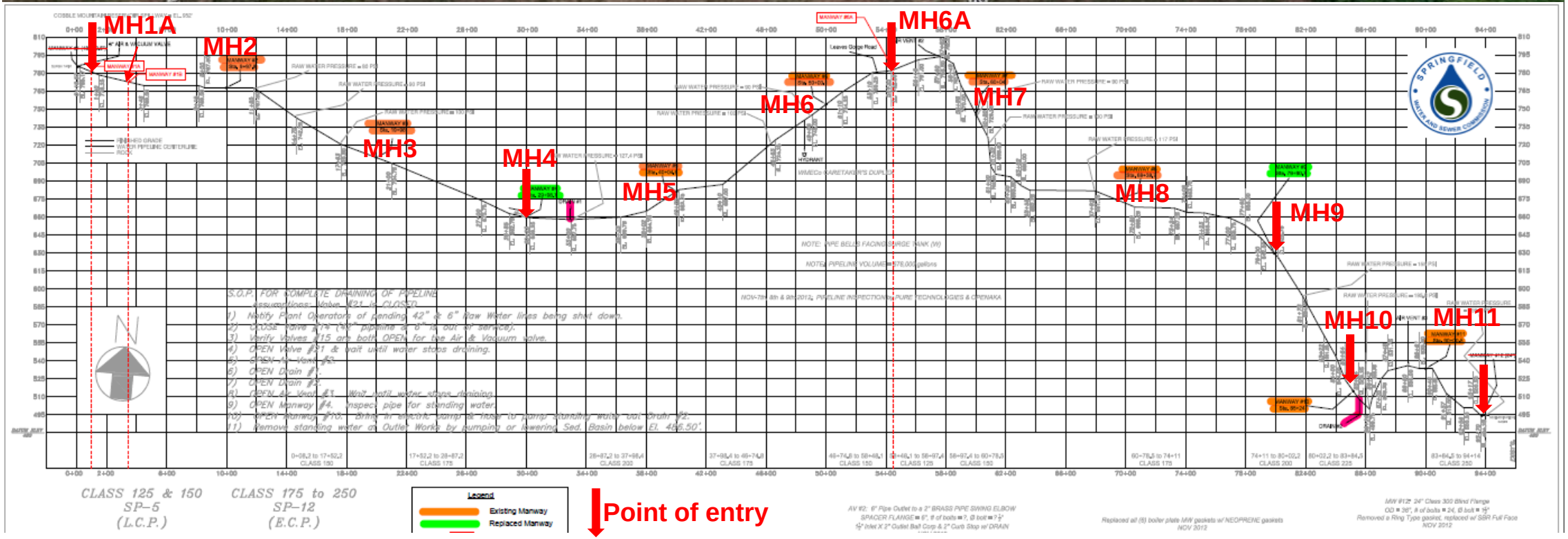

Pipeline Profile, Access Manways, Pressure Classes, Soil Cover

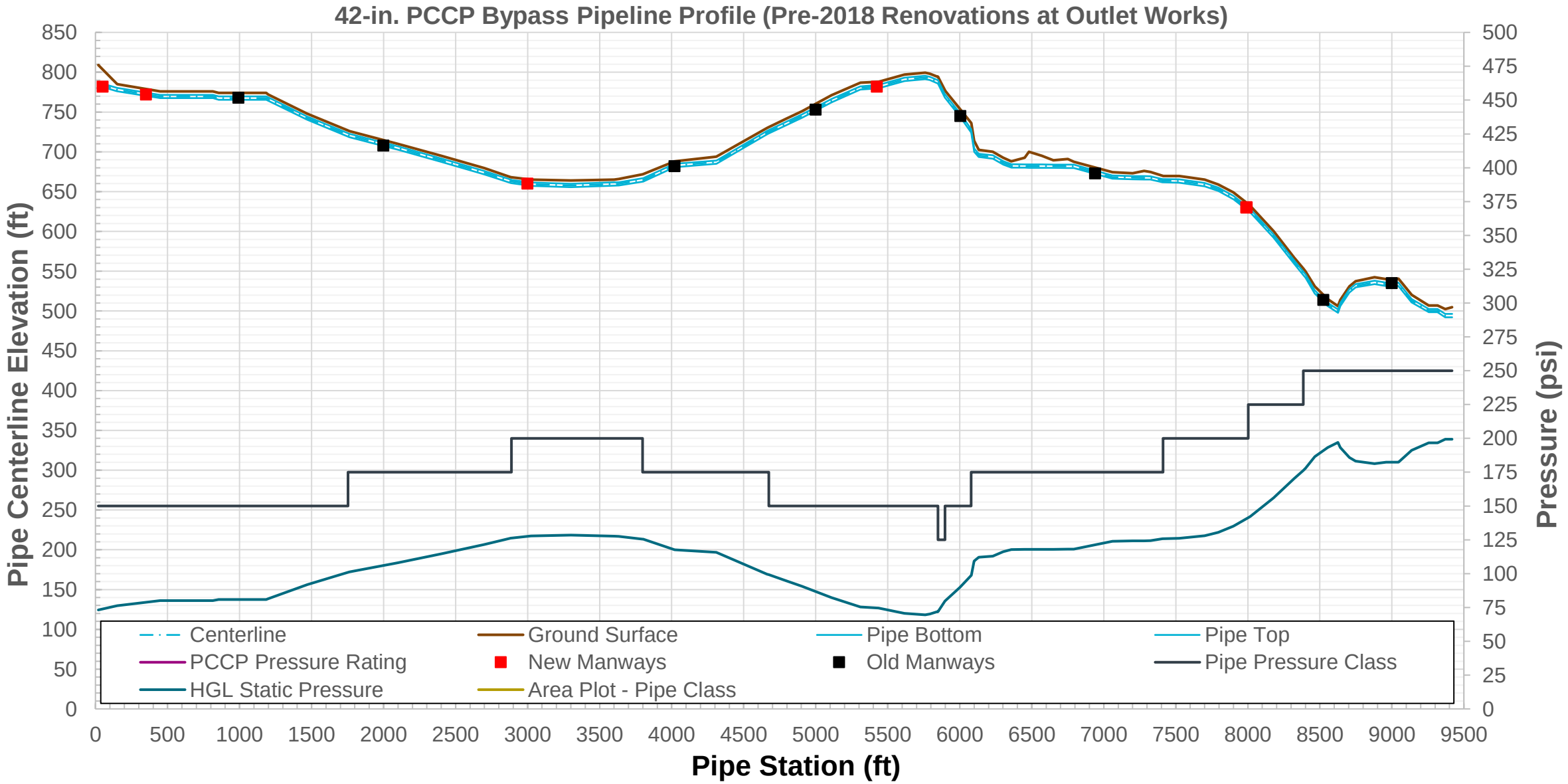

Summary – Visual Pipe Observations (Profile View)

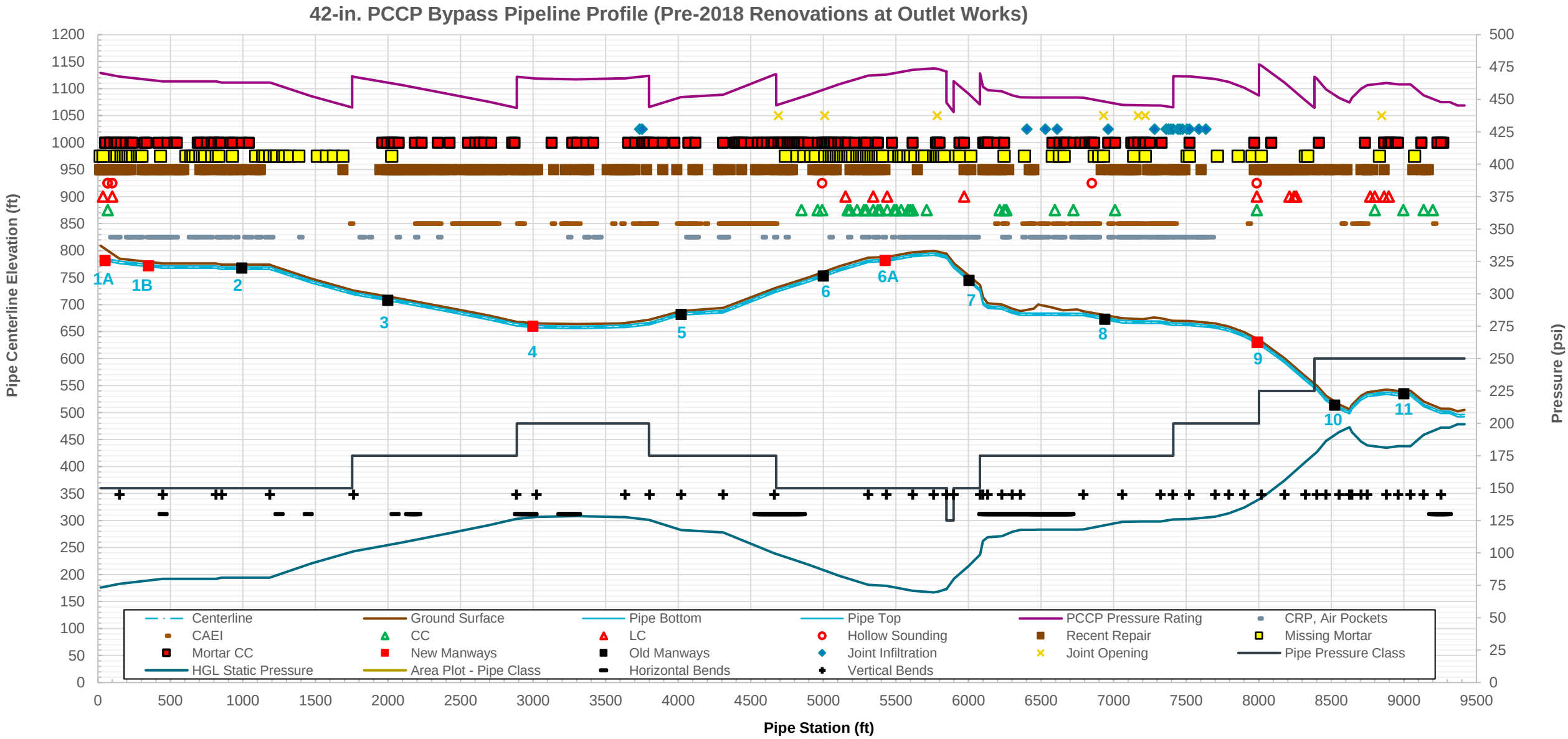

Inspection of Old Manways

Manway 2: Boiler-Type

Manway 2: Cracked Mortar Around Opening & Corroded.

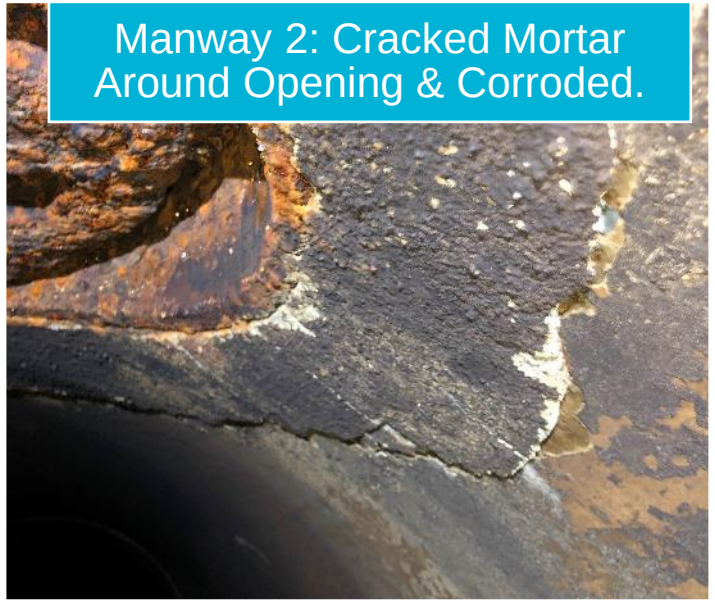

Manway 3: Boiler-Type, Corroded, No Cracks

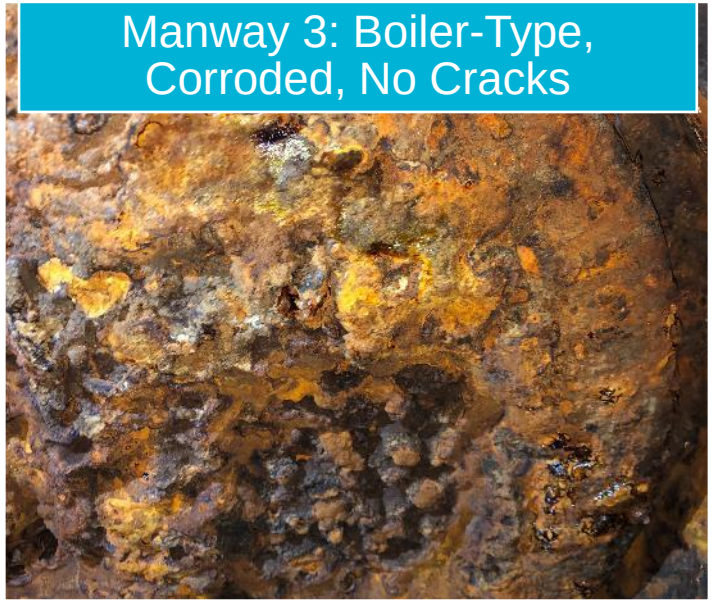

Manway 5: Boiler-Type, Corroded, No Cracks

Manway 6: Boiler-Type, Corroded. No major cracks but faint mortar crack around opening. Couple of circumferential hairline cracks near manhole opening, autogenous healing visible.

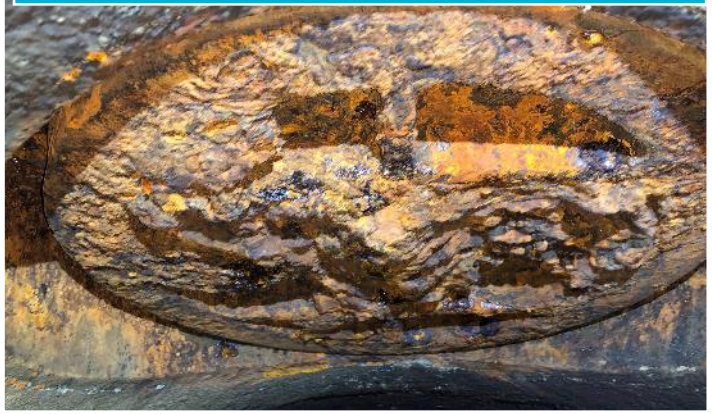

Manway 6: Ditto

Inspection of Old Manways

Manway 7: Boiler-Type, Corroded, Joints Old + Good

Manway 7: Ditto

Manway 8: Boiler-Type, Corroded, Slight Cracking Around Opening

Manway 8: Ditto

Manway 10: Boiler-Type, Corroded, Both Joints Good

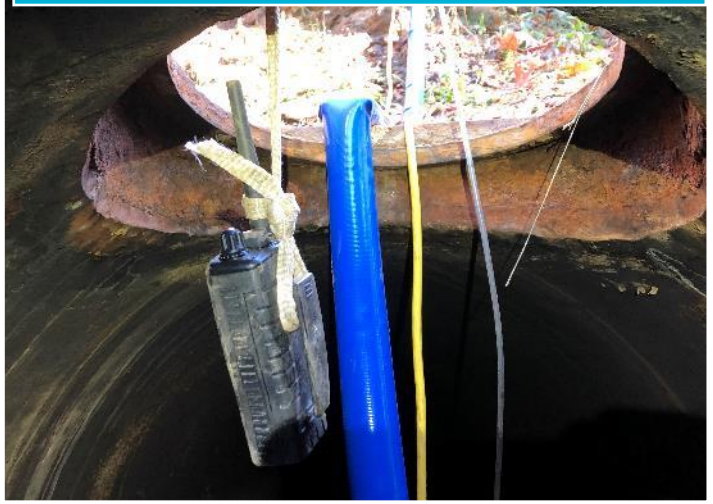

Manway 11: Boiler-Type, Corroded, No Cracking

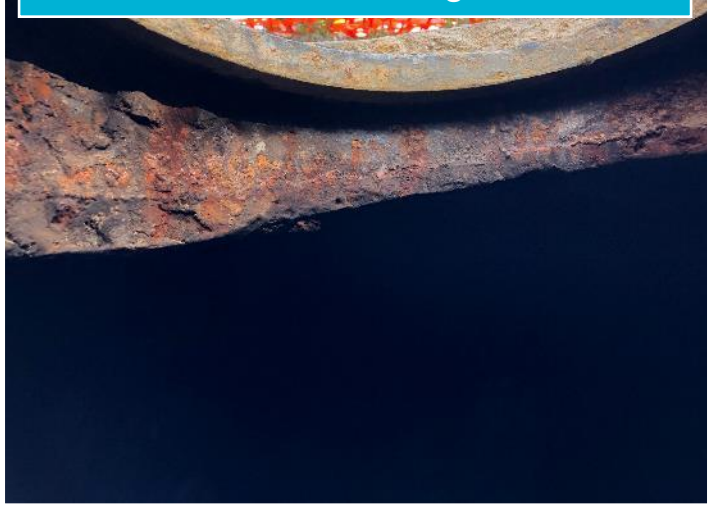

Manway 1B: Inspection Day 1 – 2 November 2020

Manway 1B (P1-28A)

Missing Mortar

Rust Staining

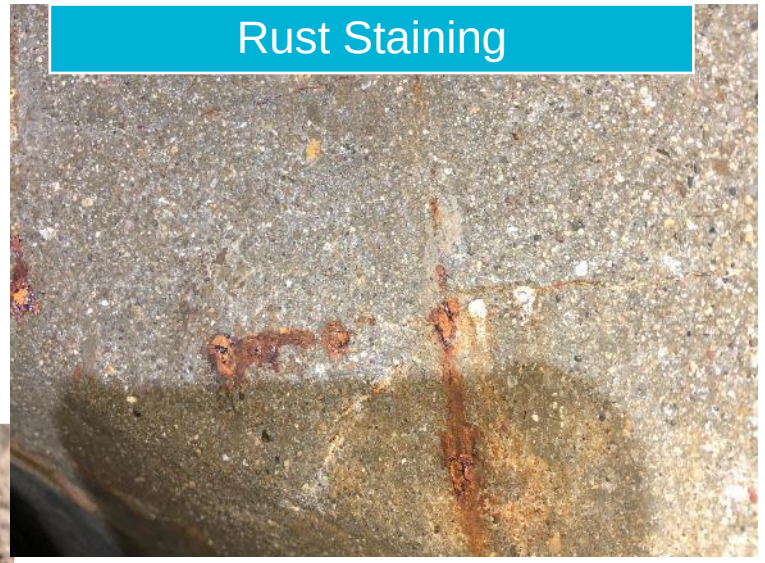

Efflorescence

Inspection Day 1 – 2 November 2020

Pipe 1-29: Crown Pitting Erosion

Pipe 1-32: Crown Pitting Erosion

Pipe 1-32: Ditto

J1-32/33: Missing Mortar

P1-34: Discoloration / CRP

P1-34: Water in Pipe

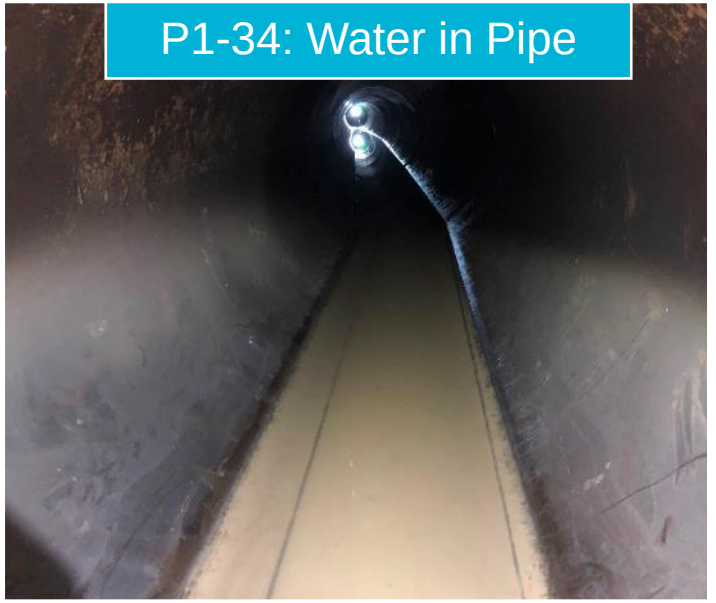

Inspection Day 2 – 3 November 2020

FDTSC at Manway-6A

P6-48: Air Valve

P6-48: Ditto

P6-49: Exposed Rebar

P6-49: Ditto

P6-49: Ditto

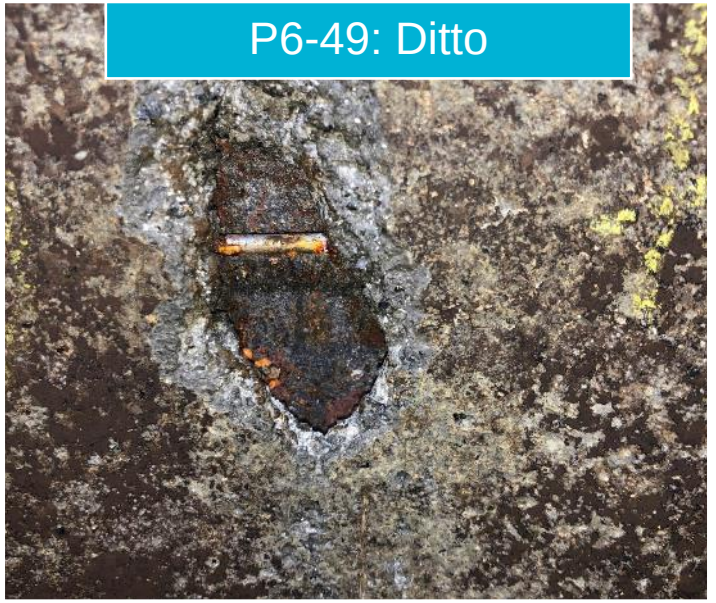

Inspection Day 2 – 3 November 2020

P6-55: Short pipe. Steep Downslope

J6-65/66: Old Joint. Good. Steep

MH-7

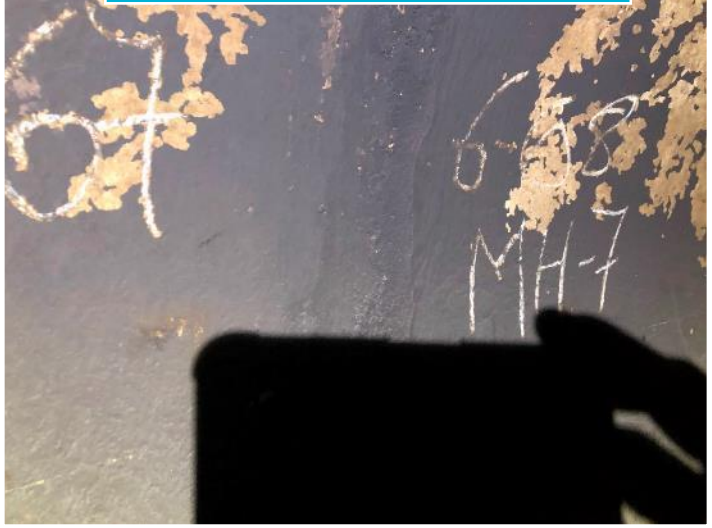

MH-7 (P6-68): Boiler Type

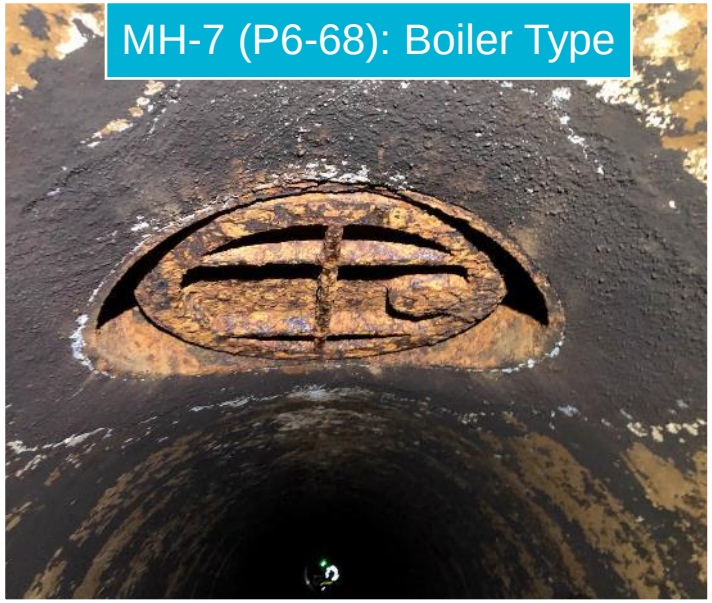

MH-7: Ditto

P7-3: Before Steep Section

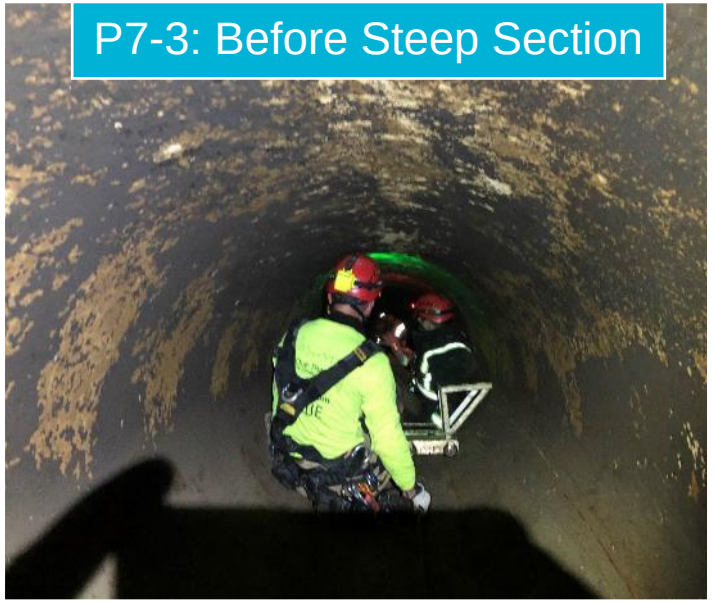

Inspection Day 3 – 4 November 2020

J8-47/46: Old joint good

P8-45:Crown Pitting

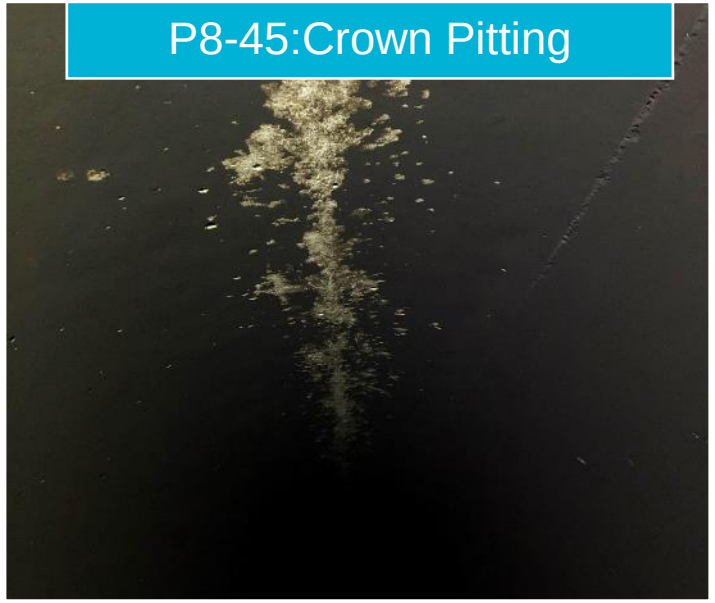

P8-45: Invert Roughness / Aggregate Exposure

P8-45: Crown Pitting

J8-44/43: Water Infiltration 6:00

J8-41/40: Water Infiltration 6:00

Inspection Day 4 – 5 November 2020

P7-57: POI-5-10 WB's

P7-57: Ditto

P7-52 & 51: CRP at 12:30

P7-49: Crack 5:30-7:30

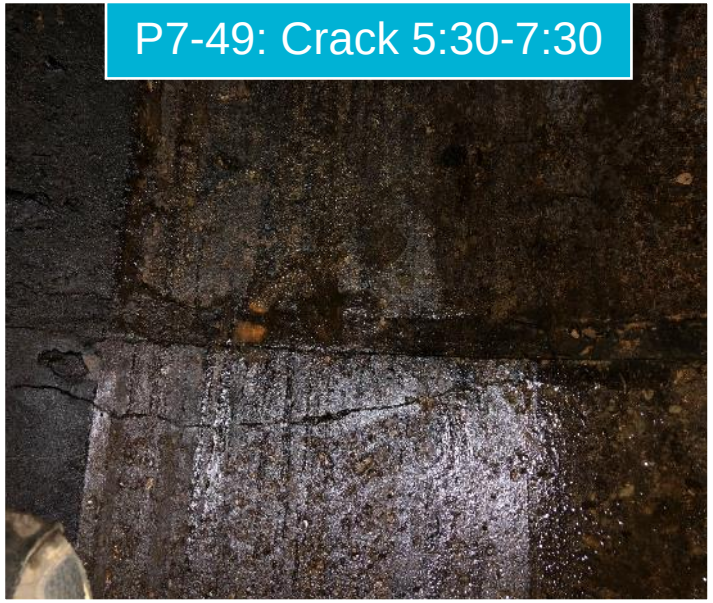

P7-41: Circumferential Cracks 10:30-12:00; 4:30-5:30; 2:00-3:00

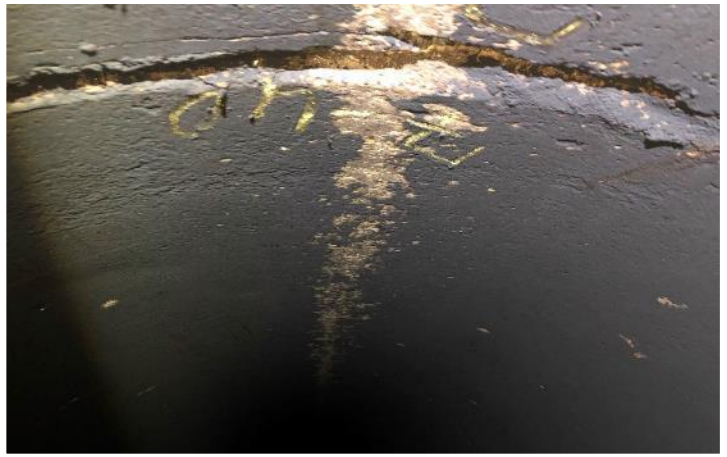

P7-41: Ditto

Inspection Day 4 – 5 November 2020

P7-11: Short Pipe 39 in. Long

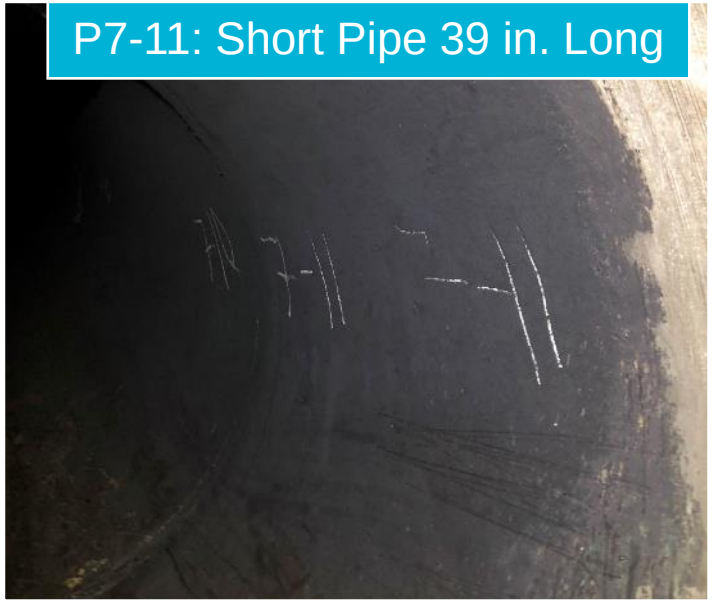

P7-10: Sloping Uphill (Looking U/S)

P7-10: D/S of Steep Section

Unnumbered Pipes Steep Section

Black Streak Along 6:00 at Steep Section

Ditto

Inspection Day 4 – 5 November 2020

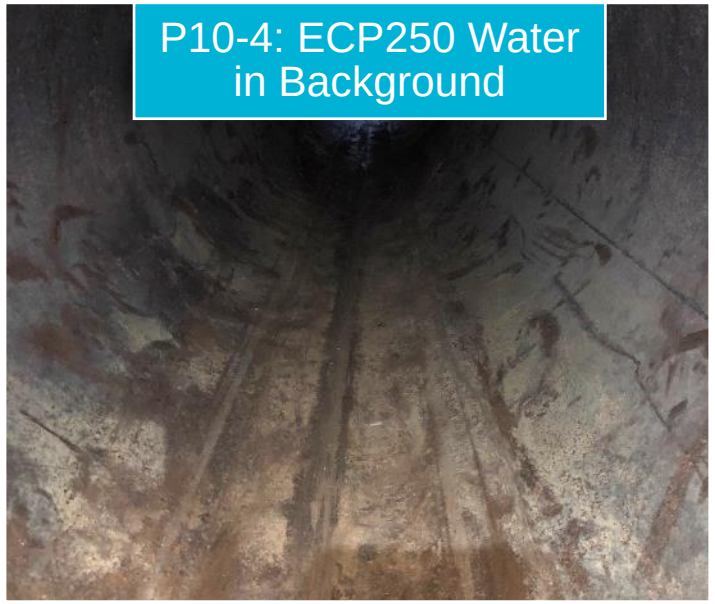

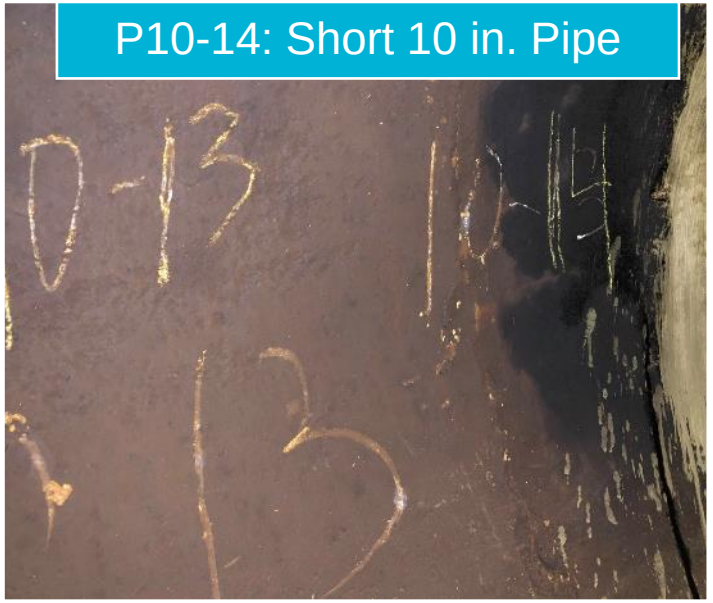

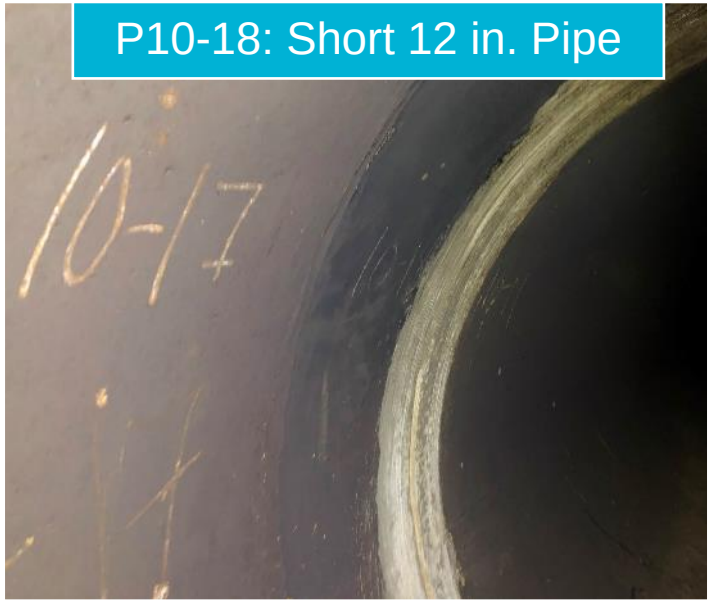

Inspection Day 4 – 5 November 2020

J11-20/21: Joint Appears to have Opened or Moved

J11-20/21: Ditto

J11-20/21: Ditto

P11-21: Steel Adapter

P11-22: Steel Pipe with Cement Mortar Lining (CML)

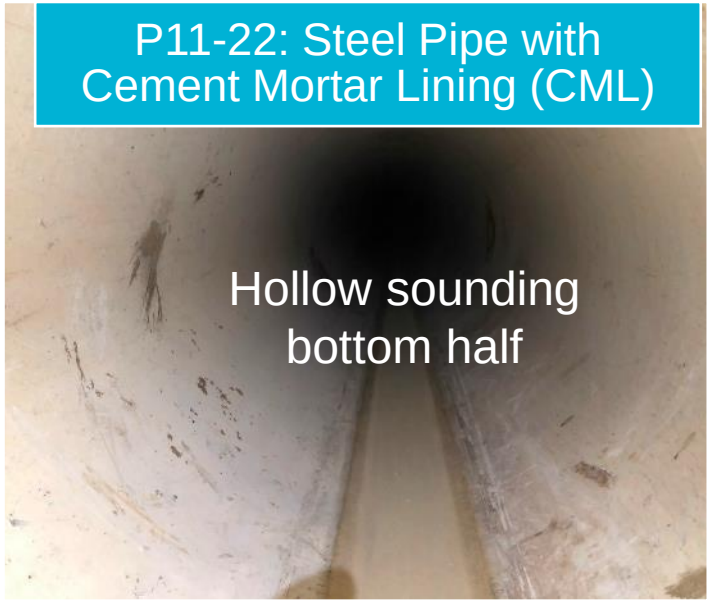

P11-22: Shrinkage Cracks

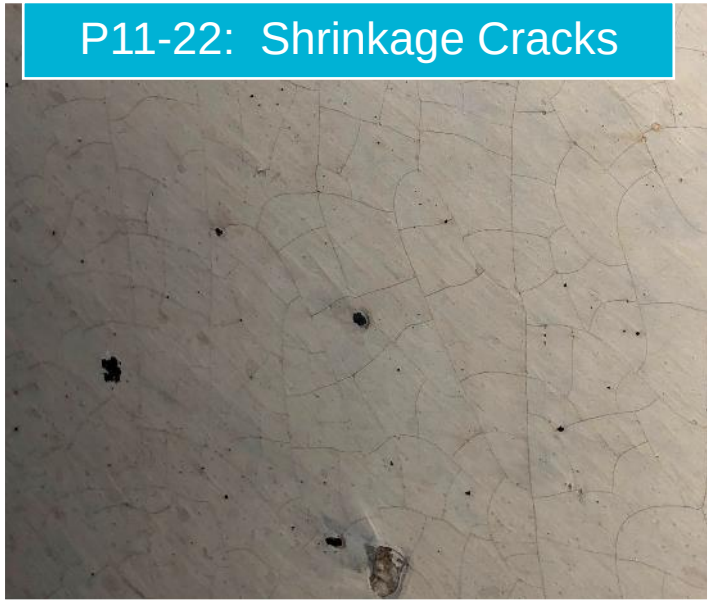

Inspection Day 4 – 5 November 2020

P11-22: 7 in. Side Outlet

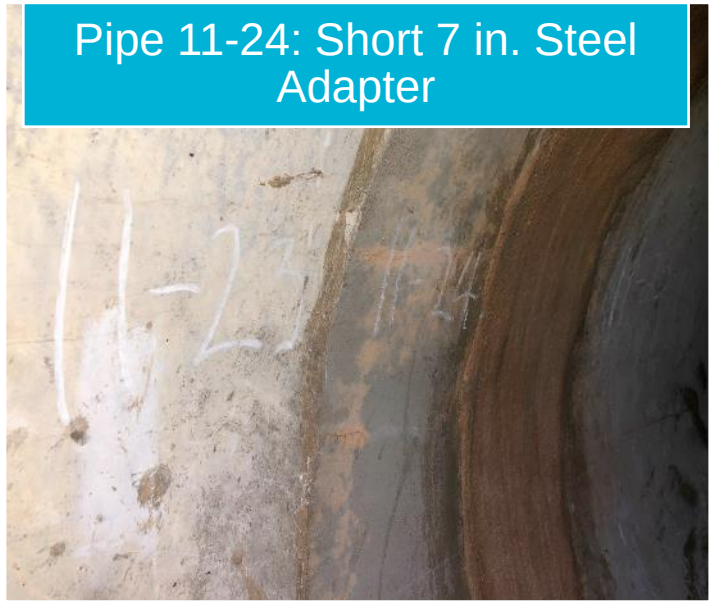
Pipe 11-24: Short 7 in. Steel Adapter

J11-24/25: Rough Joint

P11-25: 2 in. Outlet

P11-26: Steel Elbow (26-34 in. long)

P11-27: Sloping 42 in. Steel Pipe Looking U/S

Inspection Day 5 – 6 November 2020

P4-63: Corrosion Marks Along 6:00

P4-62: Ditto

J5-40/39: Wet Joint

J5-40/39: Ditto

J4-48/7: Water Infiltration

P4-23: Air Pocket Marks 10:00-12:00

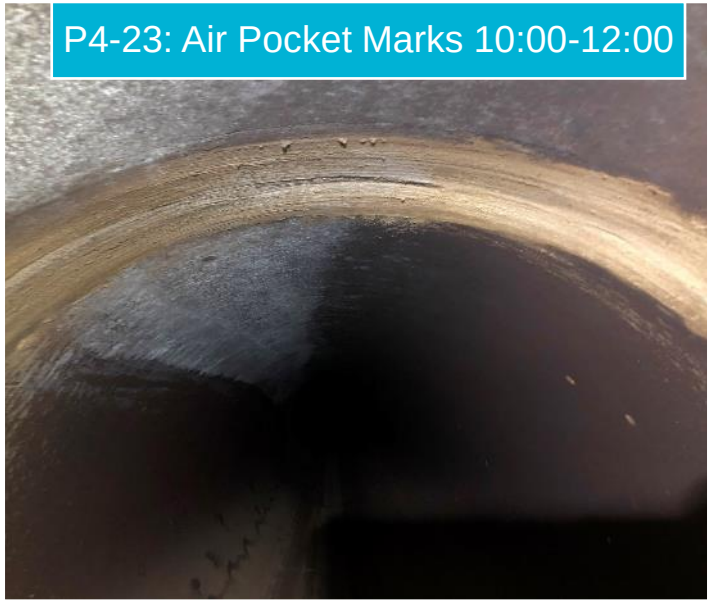

Inspection Day 6 – 9 November 2020: Continuity Testing on Pipe “7-56”

Chipping Out Mortar

Measuring Mortar Thickness

Three Sample Location

Saw Cutting Strip

Chiseling Out Mortar

Numbered Wires

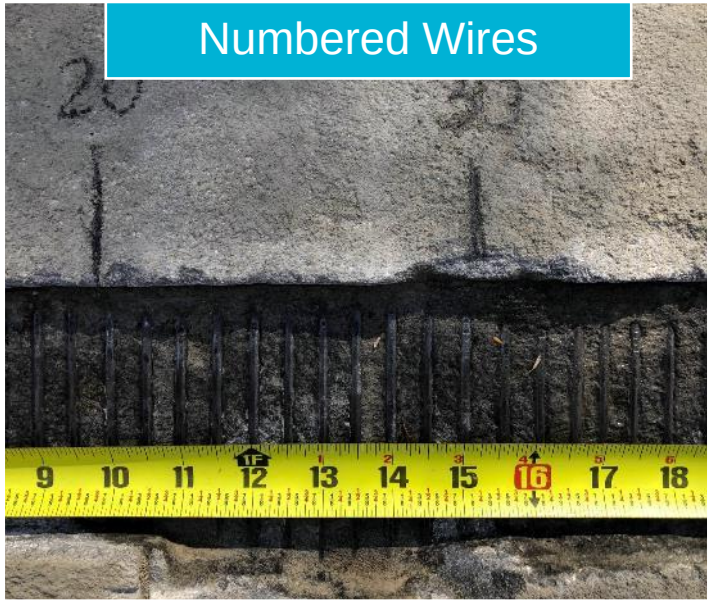

External Inspection: Day 6 – 9 November 2020 : Pipe 8-34

- Pipe 8-34 ECP 175 [5 wire breaks near joint] CH74+91.
- No visual signs of cracking, wire breaks, or damage.
- Performed hammer-sounding along full exposed length (crown, shoulder & springlines) & adjacent pipes.
  - No hollow sounds.
- Backfill material is imported clean find sand (sample collected).
- Joint diapers appear acceptable and holding.

Pipe 8-34: Excavated

Pipe 8-34: Backfilled

P8-34: U/S Joint

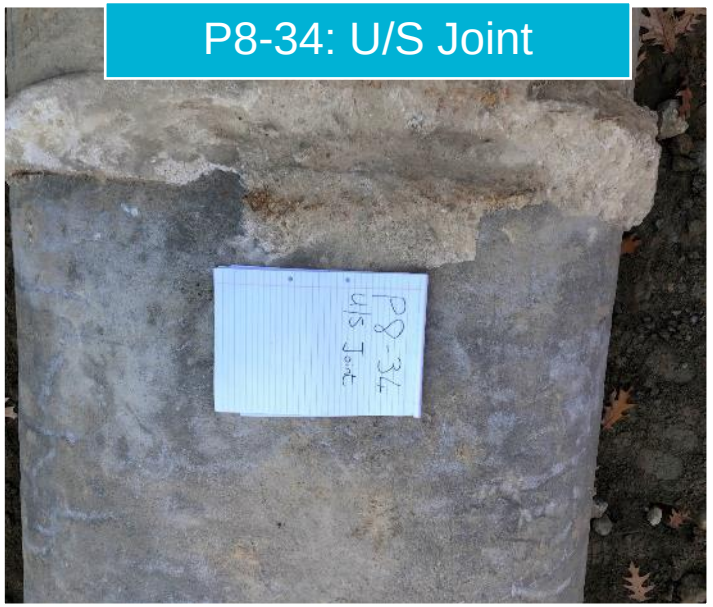

Ditto

External Inspection: Day 7 – 10 November 2020 : Pipe 10-22 (ECP250)

High Water Table

Joint 10-21/22: Failing Diaper

Ditto

Joint 10-22/23: Failing Diaper

Ditto

Muddy & Wet Conditions

Inspection Day 8 – 11 November 2020: Continuity Testing on Pipe 7-57

Excavating Pipe 7-57

Saw Cutting Strip

J7-56/7-57

Saw Cutting Strip

Numbered Wires (370)

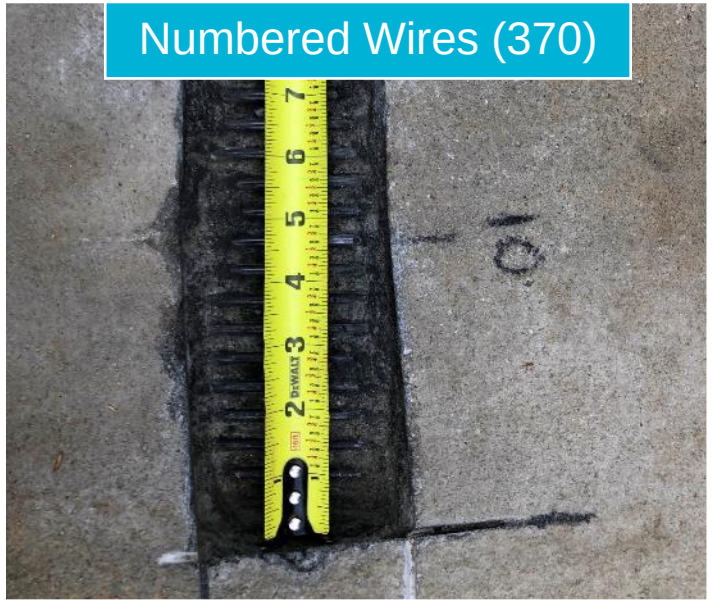

Repairing Mortar Coating

Electromagnetic (EM) Inspection Results

Table 4: PCCP with Broken Wires Identified by Pure Technologies During 2012 & 2019 Inspections

Internal Pipe No	Low STA., ft	Dia. In.	Pipe Class	Pipe Length, ft	Distance to BWZ [1], ft (2012)	Total NBW [2] (2012)	Distance to BWZ [1], ft (2019)	Total NBW [2] (2019)	Change
2-61	19+13	42	ECP175	16	12.0	5	12.0	5	0
4-22	33+50	42	ECP200	16	-	-	10.0	5	New Distress
5-8	41+65	42	ECP175	16	3.0	5	3.0	5	0
5-49	48+02	42	LCP150	16	7.0	5	7.5	10	5
5-57	49+29	42	LCP150	16	-	-	4.0	5	New Distress
7-57	68+51	42	ECP175	16	2.0	5	2.5	10	5
8-34	74+91	42	ECP200	16	-	-	14.5	5	New Distress

1. The break position of the region with broken wire wraps is measured from the low station of the distressed pipe to the center of the distress region rounded to the nearest 0.5 feet. BWZ is the broken wire zone.
2. Pure rounds the number of broken wire (NBW) wraps by region to the nearest 5 broken wire wraps. Regions with fewer than 5 broken wire wraps are reported as having 5 broken wire wraps. Similarly, regions with 5 to 10 broken wire wraps are rounded to 10 broken wire wraps.

Summary – Visual Pipe Observations (Profile View)

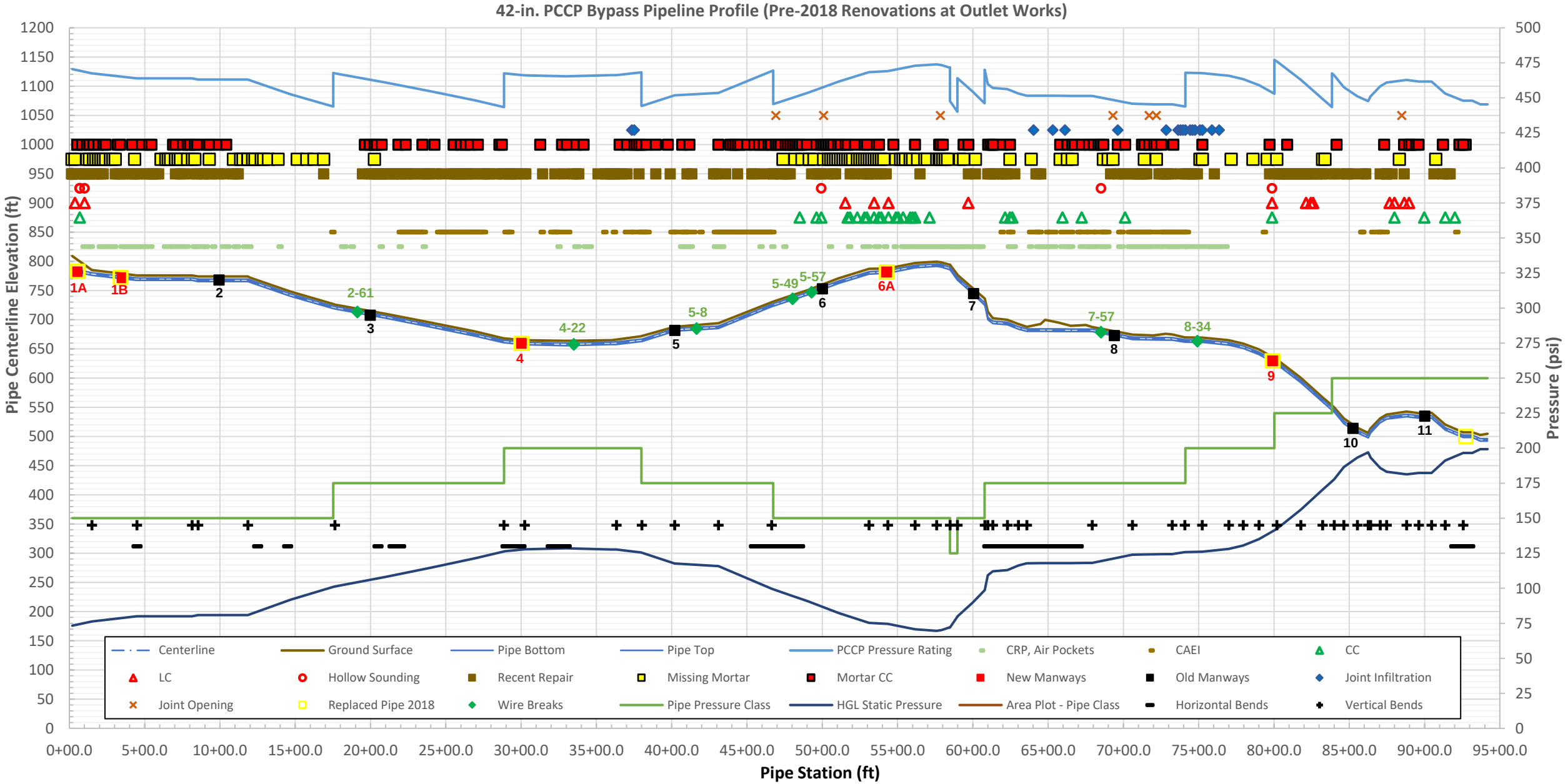

Thank you

AECOM

Imagine it.
Delivered.