NEWBURYPORT=WEST NEWBURY
PLUMMER SPRING ROAD/MIDDLE STREET

STATE	FED. AID PROJ. NO.	SHEET NO.	TOTAL SHEETS
MA	-	19	42
PROJECT FILE NO.		N/A	

KEY PLAN, LOCUS AND PROFILE

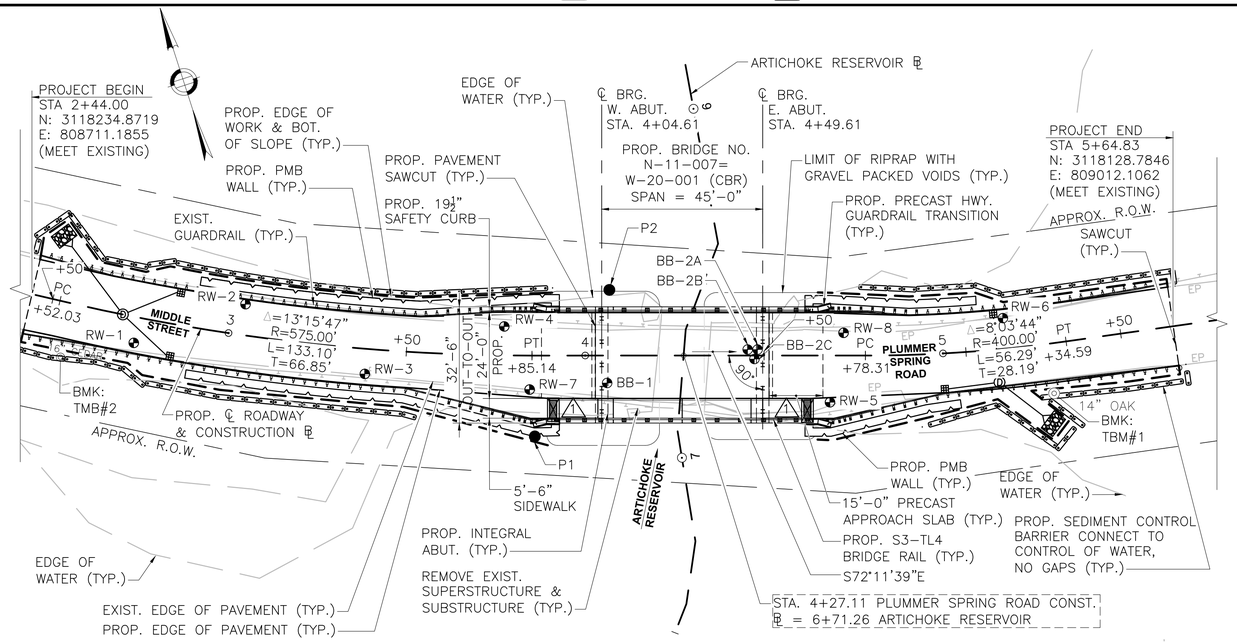

KEY PLAN
SCALE: 1" = 20'

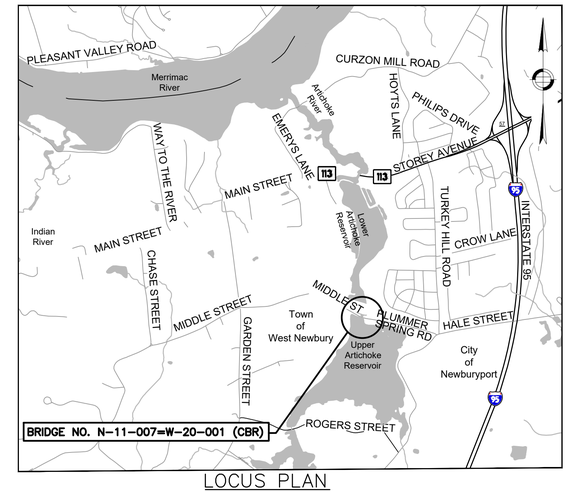

LOCUS PLAN
SCALE: 1" = 2000'

INDEX

SHEET NO.	DESCRIPTION
1 OF 20	KEY PLAN, LOCUS AND PROFILE △1
2 OF 20	GENERAL NOTES △1
3 OF 20	BORING LOG BB-1
4 OF 20	BORING LOG BB-2A
5 OF 20	BORING LOG BB-2C
6 OF 20	PROPOSED PLAN & ELEVATION
7 OF 20	EXISTING CONDITIONS
8 OF 20	ABUTMENT
9 OF 20	ABUTMENT DETAILS
10 OF 20	WINGWALL & STRIATION DETAILS
11 OF 20	FRAMING PLAN & BEAM DETAILS
12 OF 20	TRANSVERSE SECTION & DECK DETAILS
13 OF 20	DECK DETAILS
14 OF 20	PRECAST HIGHWAY GUARDRAIL TRANSITION BASE DETAIL AT SAFETY CURB
15 OF 20	PRECAST HIGHWAY GUARDRAIL TRANSITION BASE DETAIL AT SIDEWALK
16 OF 20	APPROACH SLAB & MISC DETAILS
17 OF 20	HIGHWAY GUARDRAIL TRANSITION S3-TL4 (1 OF 2)
18 OF 20	HIGHWAY GUARDRAIL TRANSITION S3-TL4 (2 OF 2)
19 OF 20	S3-TL4 RAILING DETAILS (1 OF 2)
20 OF 20	S3-TL4 RAILING DETAILS (2 OF 2)

NOTE:

CONTRACTOR TO REFER TO HIGHWAY PLAN 4 OF 42 AND GEOTECHNICAL REPORT FOR BORING LOCATIONS/BORING LOGS/PROBES (RW-1 – RW-8 AND P1 & P2) AND DESIGN PARAMETERS RELATED TO THE PMB WALLS

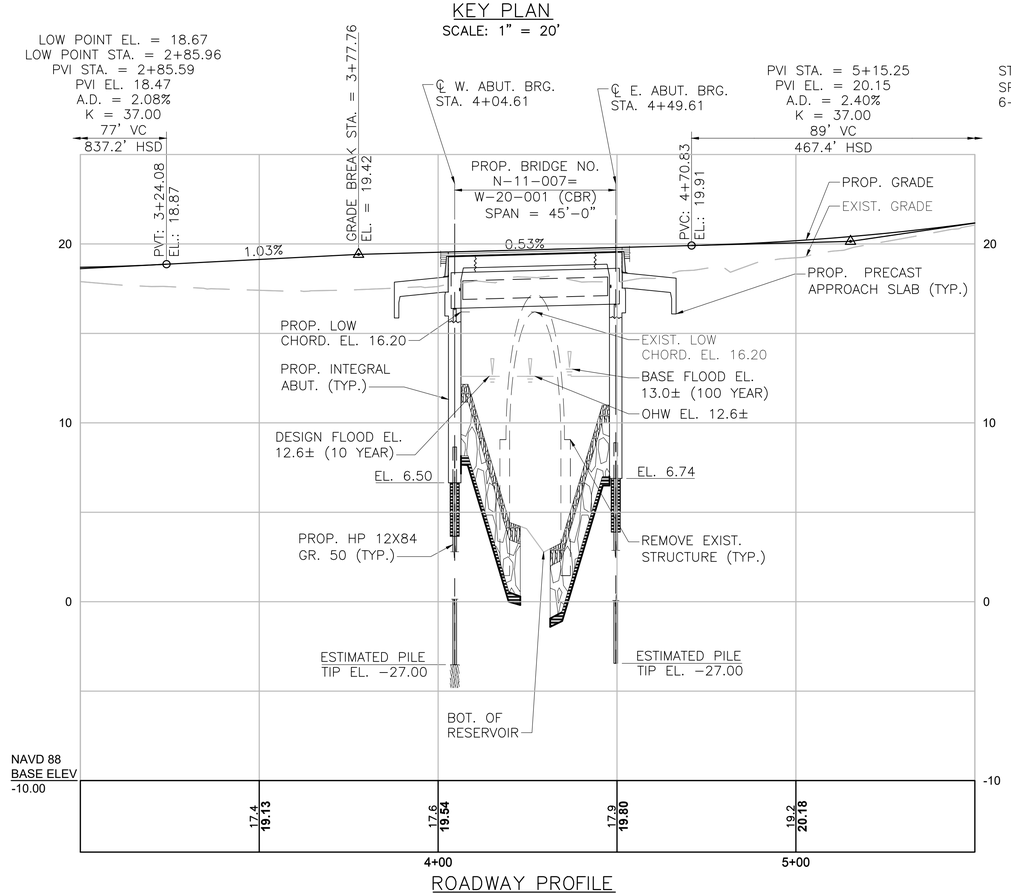

ROADWAY PROFILE
1" = 20' HORIZONTAL
1" = 4' VERTICAL

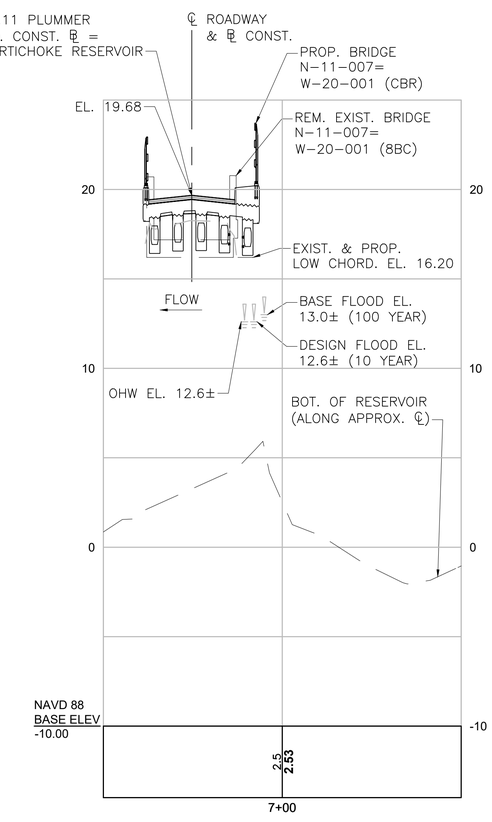

ARTICHOKE RESERVOIR PROFILE
1" = 20' HORIZONTAL
1" = 4' VERTICAL

COMMONWEALTH OF MASSACHUSETTS
MassDOT, Highway Division
APPROVED UNDER PROVISIONS OF MASS. GEN. LAWS CH 85 S 35

STATE BRIDGE ENGINEER — DATE 3/17/2023

MONTH DD, YYYY	ISSUED FOR CONSTRUCTION
AUGUST 6, 2024	△1 ESTIMATED QUANTITIES SIDEWALK RAMPS

COMMONWEALTH OF MASSACHUSETTS — MICAH C. MORRISON — STRUCTURAL — No. 46726 — REGISTERED PROFESSIONAL ENGINEER — 3-15-2023

BSC GROUP
803 SUMMER STREET
BOSTON, MA 02127
(617) 896-4300
www.bscgroup.com

PROPOSED BRIDGE
NEWBURYPORT/WEST NEWBURY
PLUMMER SPRING RD./MIDDLE ST.
OVER ARTICHOKE RESERVOIR

2839500_BR1(N11007_W20001).DWG Plotted on 15-Mar-2023 10:25 AM

GENERAL NOTES:

DESIGN:

IN ACCORDANCE WITH THE 2020 (9TH EDITION) AMERICAN ASSOCIATION OF STATE HIGHWAY AND TRANSPORTATION OFFICIALS LRFD BRIDGE DESIGN SPECIFICATIONS FOR HL-93 LOADING.

BENCH MARK:

BENCH MARK 1: TBM#1
NAIL IN 14" OAK
N=3118121.019, E=808974.433, EL.=22.17

BENCH MARK 2: TBM#2
SPIKE IN 5" CEDAR
N=3118215.642, E=808713.356, EL.=18.40

ELEVATIONS ARE BASED ON THE NORTH AMERICAN VERTICAL DATUM (NAVD) OF 1988.

SURVEY:

AN INSTRUMENT FIELD SURVEY WAS PERFORMED BY BSC GROUP IN SEPTEMBER 2018.
THE COORDINATES, IN FEET, ARE BASED UPON THE NORTH AMERICAN DATUM OF 1983 (NAD 83)

DATE:

TO BE PLACED ON THE INSIDE FACE OF THE NORTHEASTERLY AND SOUTHWESTERLY HIGHWAY GUARDRAIL TRANSITIONS. A SHEET SHOWING THE SIZE AND CHARACTER OF NUMERALS WILL BE FURNISHED. THE DATE USED SHALL BE THE LATEST YEAR OF THE CONTRACT COMPLETION AS OF THE DATE THE BRIDGE IS CONSTRUCTED. BOTH ENDS OF THE BRIDGE SHALL FEATURE THE SAME DATE. SEE SHEET 6 OF 20.

SCALES:

SCALES NOTED ON THE PLANS ARE NOT APPLICABLE TO REDUCED SIZE PRINTS. DIVIDE SCALES BY 2 FOR HALF-SIZED PRINTS (A3).

FOUNDATIONS:

FOUNDATIONS MAY BE ALTERED, IF NECESSARY, TO SUIT CONDITIONS ENCOUNTERED DURING CONSTRUCTION, WITH THE APPROVAL OF THE ENGINEER.

UNSUITABLE MATERIAL:

ALL UNSUITABLE MATERIAL SHALL BE REMOVED WITHIN THE LIMITS OF THE FOUNDATIONS OF THE STRUCTURE, AS DIRECTED BY THE ENGINEER.

ANCHOR BOLTS:

ALL ANCHOR BOLTS SHALL BE SET BY A TEMPLATE BEFORE THE CONCRETE IS PLACED.
(SEE SHEETS 19 & 20)

REINFORCEMENT:

REINFORCING STEEL SHALL CONFORM TO THE REQUIREMENTS OF AASHTO M31 GRADE 60. UNLESS OTHERWISE NOTED ON THE CONSTRUCTION DRAWING, ALL BARS SHALL BE LAPPED AS FOLLOWS:

MODIFICATION CONDITION	#4 BARS	#5 BARS	#6 BARS	#7 BARS	#8 BARS
1. NONE	16"	19"	23"	33"	38"
2. 12" OF CONCRETE BELOW BAR	20"	25"	30"	43"	49"
3. COATED BARS, COVER < $3d_b$, OR CLEAR SPACING < $6d_b$	23"	29"	34"	50"	57"
4. COATED BARS, ALL OTHER CASES	18"	23"	27"	40"	46"
5. CONDITION 2. AND 3.	26"	32"	39"	56"	64"
6. CONDITION 2. AND 4.	24"	30"	36"	52"	59"

ALL OTHER BARS SHALL BE LAPPED AS SHOWN ON THE CONSTRUCTION DRAWINGS.
ALL REINFORCEMENT SHALL BE EPOXY COATED.

MEMBRANE WATERPROOFING:

ALL MEMBRANE WATERPROOFING USED ON BRIDGE DECKS SHALL BE MEMBRANE WATERPROOFING (SPRAY-APPLIED) FOR NEW BRIDGE DECKS.

CONCRETE:

CONCRETE TYPE	APPLICATION
CAST IN PLACE	
4000 PSI, 1.5 INCH, 565 CEMENT CONCRETE	LOWER INTEGRAL ABUTMENTS & WINGWALLS
4000 PSI, ¾ INCH, 585 HP CEMENT CONCRETE	DECK SLAB, UPPER INTEGRAL ABUTMENTS & WINGWALLS
4000 PSI, ¾ INCH, 610 CEMENT CONCRETE	BEAM PEDESTALS
5000 PSI, ¾ INCH, 685 HP CEMENT CONCRETE	SAFETY CURB & SIDEWALK
PRECAST	
5000 PSI, ¾ INCH, 685 HP CEMENT CONCRETE	GUARDRAIL TRANSITIONS
4000 PSI, 1.5 INCH, 565 CEMENT CONCRETE	APPROACH SLABS

* SEE SHEET 11 OF 20 FOR PRESTRESSED B36-24 BEAM DETAILS.

CONTRACTOR MUST BE MASSDOT PRE-QUALIFIED IN BRIDGE CONSTRUCTION

STRUCTURAL STEEL:

PILES SHALL CONFORM TO AASHTO M270 GRADE 50.

EXISTING CONDITIONS:

ALL DIMENSIONS AND DETAILS SHOWN FOR THE EXISTING STRUCTURE ARE NOT GUARANTEED TO BE CORRECT. MASSDOT, THE CITY OF NEWBURYPORT AND TOWN OF WEST NEWBURY DO NOT HAVE ANY EXISTING PLANS OF THE STRUCTURE. THE CONTRACTOR SHALL DETERMINE AND ESTABLISH ALL DIMENSIONS AND DETAILS NECESSARY FOR THE COMPLETION OF ALL WORK BY FIELD MEASUREMENT AND SURVEY.

THE CONTRACTOR SHALL BE RESPONSIBLE FOR THE ACCURACY AND ADEQUACY THEREOF AND SHALL NOT COMMENCE ANY FABRICATION UNTIL THEY HAVE MADE THE REQUIRED MEASUREMENTS ON THE ACTUAL STRUCTURE AND THE SUBMITTED SHOP DRAWINGS HAVE BEEN APPROVED BY THE ENGINEER. SHOP DRAWINGS SHALL STATE THAT THE EXISTING DIMENSIONS, ANGLES, ELEVATIONS AND FIELD CONDITIONS HAVE BEEN FIELD VERIFIED BY THE CONTRACTOR.

THE CONTRACTOR SHALL VERIFY ALL DIMENSIONS REQUIRED FOR THE PROPER PERFORMANCE OF THE WORK. FIELD CONDITIONS MAY EXIST, WHICH DEVIATE FROM THE TYPICAL WORK AND THEORETICAL DIMENSION SHOWN ON THE PLANS. THE CONTRACTOR SHALL BE SOLELY RESPONSIBLE FOR FABRICATION AND FIT OF THEIR WORK.

TRAFFIC NOTES:

THE BRIDGE IS CURRENTLY CLOSED WITH A DETOUR IN PLACE. THE BRIDGE WILL REMAIN CLOSED FOR THE DURATION OF BRIDGE CONSTRUCTION.

UTILITIES:

THE CONTRACTOR SHALL PROTECT THE RESERVOIR FROM DAMAGE/CONTAMINATION. THE CONTRACTOR SHALL COORDINATE AND COOPERATE WITH THE WATER DEPARTMENT. THERE ARE NO KNOWN UTILITIES ABOVE GROUND OR BELOW AT THE SITE LOCATION. THE CONTRACTOR SHALL CONTACT DIG-SAFE BEFORE WORK BEGINS.

CONSTRUCTION:

ANY PERMIT MODIFICATIONS REQUIRED DUE TO THE CONTRACTOR'S MEANS AND METHODS WILL BE THE RESPONSIBILITY OF THE CONTRACTOR. THE CONTRACTOR SHALL MODIFY ALL REQUIRED PERMITS AND LICENSES AND PAY ALL CHARGES AND FEES INCURRED. THE CONTRACTOR SHALL GIVE ALL NOTICES NECESSARY AND INCIDENT TO THE DUE AND LAWFUL PROSECUTION OF THE WORK, AND SHALL COMPLY WITH ALL LAWS, ORDINANCES, RULES, AND REGULATIONS OF THE FEDERAL GOVERNMENT, THE STATE, THE TOWN/CITY, AND OTHER BODIES HAVING JURISDICTION OVER THE WORK AND ENCOMPASSED BY THE CONTRACT. THE COMPLETION DATE WILL REMAIN AS STATED IN THE CONTRACT DOCUMENTS.

AREAS OUTSIDE THE LIMITS OF PROPOSED WORK DISTURBED BY THE CONTRACTOR'S OPERATIONS SHALL BE RESTORED TO THEIR ORIGINAL CONDITION AT THE CONTRACTOR'S EXPENSE.

CONSTRUCTION JOINTS:

CONSTRUCTION JOINTS, OTHER THAN THOSE SHOWN ON THE PLANS, WILL NOT BE PERMITTED WITHOUT THE APPROVAL OF BSC GROUP.

ESTIMATED QUANTITIES (NOT GUARANTEED)

ITEM NO.	DESCRIPTION	QUANTITY	UNIT
115.1	DEMOLITION OF BRIDGE NO. N-11-007 = W-20-001	1	LS
140.	BRIDGE EXCAVATION	570	CY
143.	CHANNEL EXCAVATION 390 1	~~585~~	CY
144.	CLASS B ROCK EXCAVATION	90	CY
151.1	GRAVEL BORROW FOR BRIDGE FOUNDATION	290	CY
151.2	GRAVEL BORROW FOR BACKFILLING STRUCTURES AND PIPES	35	CY
153.1	CONTROLLED DENSITY FILL - NON-EXCAVATABLE	14	CY
156.13	CRUSHED STONE FOR INTEGRAL ABUTMENT PILES	35	TON
156.5	CRUSHED STONE FOR FILTER BLANKET 44 1	~~195~~	CY
450.60	SUPERPAVE BRIDGE SURFACE COURSE - 9.5 (SSC-B-9.5)	15	TON
450.70	SUPERPAVE BRIDGE PROTECTIVE COURSE - 9.5 (SPC-B-9.5)	20	TON
698.4	GEOTEXTILE FABRIC FOR PERMANENT EROSION CONTROL 390 1	~~215~~	SY
942.124	STEEL PILE HP 12 X 84 380 1	~~380~~	FT
948.41	DYNAMIC LOAD TEST BY CONTRACTOR	2	EA
948.5	PILE SHOES	10	EA
983.12	RIPRAP WITH GRAVEL PACKED VOIDS 440 1	~~555~~	TON
983.521	STREAMBED/BANK RESTORATION 86 1	~~110~~	CY
991.1	CONTROL OF WATER - STRUCTURE NO. N-11-001 = W-20-001	1	LS
994.01	TEMPORARY PROTECTIVE SHIELDING BRIDGE NO. N-11-001 = W-20-001	1	LS
995.01	BRIDGE STRUCTURE, BRIDGE NO. N-11-001 = W-20-001	1	LS

GENERAL NOTE:

THE CONTRACTOR MUST COORDINATE ALL WORK WITH THE CITY OF NEWBURYPORT, THE TOWN OF WEST NEWBURY, THE WATER DEPARTMENT, THE ENGINEER, AND ANY AFFECTED ABUTTERS. WORK SHALL NOT PROCEED WITHOUT WRITTEN APPROVAL FROM THE CITY OF NEWBURYPORT AND THE TOWN OF WEST NEWBURY.

SECTION MARK:

DIRECTION OF SECTION VIEW
SECTION #
5
11
SHEET NUMBER WHERE THE SECTION CAN BE FOUND, NO SHEET NUMBER IF IT IS ON THE SAME SHEET. INSTEAD "-" IS DENOTED.

NEWBURYPORT = WEST NEWBURY
PLUMMER SPRING ROAD

STATE	FED. AID PROJ. NO.	SHEET NO.	TOTAL SHEETS
MA	-	20	42
PROJECT FILE NO.		N/A	

GENERAL NOTES

TRAFFIC DATA

	ROADWAY OVER	ROADWAY UNDER
DESIGN YEAR	2039	
AVERAGE DAILY TRAFFIC - PRESENT	920	
AVERAGE DAILY TRAFFIC - DESIGN YEAR	1120	
DESIGN HOURLY VOLUME	125	
DIRECTIONAL DISTRIBUTION	53% WB	
TRUCK PERCENTAGE - AVERAGE DAY	2.9%	
TRUCK PERCENTAGE - PEAK HOUR	1.6%	
DESIGN SPEED	30 MPH	
DIRECTIONAL DESIGN HOURLY VOLUME	65	

SEISMIC DESIGN CRITERIA

DESIGN RETURN PERIOD:	1000 YEARS
DESIGN SPECTRA	
A_S	0.149
SD_S	0.290
SD1	0.101
SITE CLASS	D
SEISMIC DESIGN CATEGORY (SDC)	A

HYDRAULIC DESIGN DATA

DRAINAGE AREA:	5.60	SQ. MILES
DESIGN FLOOD DISCHARGE:	80.0	C.F.S.
DESIGN FLOOD FREQUENCY:	10	YEARS
DESIGN FLOOD VELOCITY:	0.32	F.P.S.
DESIGN FLOOD ELEVATION:	12.60	FEET, NAVD
BASE (100-YEAR) FLOOD DATA		
BASE FLOOD DISCHARGE:	240	C.F.S.
BASE FLOOD ELEVATION:	13.00	FEET, NAVD
DESIGN AND CHECK SCOUR DATA		
DESIGN SCOUR FLOOD EVENT RETURN FREQUENCY:	25	YEARS
DESIGN FLOOD ABUTMENT SCOUR DEPTH:	0.00	FEET
CHECK SCOUR FLOOD EVENT RETURN FREQUENCY:	50	YEARS
CHECK FLOOD ABUTMENT SCOUR DEPTH:	0.00	FEET
FLOOD OF RECORD		
DISCHARGE:	N/A	C.F.S.
FREQUENCY:	N/A	YEARS
MAXIMUM ELEVATION:	N/A	FEET, NAVD
DATE:	N/A	MONTH, YEAR
HISTORY OF ICE FLOES:	N/A	N.A.
EVIDENCE OF SCOUR AND EROSION:	N/A	N.A.
TEMPORARY WATER CONTROL DESIGN DATA		
DESIGN FLOOD DISCHARGE:	50	C.F.S.
DESIGN FLOOD FREQUENCY:	5	YEARS
DESIGN FLOOD VELOCITY:	0.93	(F.P.S.)
DESIGN FLOOD ELEVATION:	12.63	FEET, NAVD

COMMONWEALTH OF MASSACHUSETTS
MassDOT, Highway Division
APPROVED UNDER PROVISIONS OF MASS. GEN. LAWS CH 85 S 35
STATE BRIDGE ENGINEER — DATE 3/17/2023

DATE	DESCRIPTION
MONTH DD, YYYY	ISSUED FOR CONSTRUCTION
USE ONLY PRINTS OF LATEST DATE	

2839500_BR2-5(N11007_W20001).DWG Plotted on 15-Mar-2023 10:25 AM
CHAPTER 85 REVIEW 06-24-2021

GEOSCIENCES TESTING AND RESEARCH, INC.

55 Middlesex Street, Suite 225, North Chelmsford, MA.
Phone: (978) 251-9395 www.gtrinc.net

GTR ENGINEERING SINCE 1995

Project Name: Plummer Spring Road
Location: Newburyport, MA

Boring No. BB-1
Page: 1 of 2
GTR Job #: 22.219
GTR Rep: C. George
Reviewer: C. George

Drilling Co. Car-Dee Corporation
Driller: Steve DeSimone Helper(s): Joe/Frank
Start Date: 2/4/2019 End Date: 2/5/2019
Gnd Surface Elev (ft): ~ 17.7'
Location: 808857.91 E , 3118163.09 N
Note: Truck mounted Deidrich D50 with Automatic Hammer

Equipment	Casing	Sampler	Core
Type	HW	SS	NX
Size I.D.	4"	1.75"	2.16"
Hammer Wt.	300 lb	140 lb	-
Hammer Fall	30 in	30 in	-

Groundwater		Depth (ft)		
Date	Time	Water	Casing	Hole
2/5	7am	5.5'	45'	

ELEVATION (FEET): 15.00, 10.00, 5.00, 00.00, −5.00, −10.00

Depth	Case BPF	No.	Pen/ Rcvy	Depth (ft)	Blows per 6in	Field Test	Description and Classification	Stratum Description	Additional Data	Notes
		SS-1A	24/16	0.7-1.7	59-20		S-1A,Dry, brown, dense, fine SAND, little Silt, trace Gravel	ASPHALT 8"		1,2
		SS-1B		1.7-2.7	14-8		S-1B, Dry, brown, Hard, Clayey SILT, trace fine Sand			
5		S-2	24/15	5-7	2-3		Wet, Brown, very loose, fine to medium SAND, little Clayey Silt, trace Gravel			
					1 for 12"					
10		SS-3	24/14	10-12	3-2		Wet, Brown, very loose, fine to medium SAND, trace Silt, trace Gravel	FILL		
					1 for 12"					
15		SS-4	24/12	15-17	20-7		Wet, Brown, loose, fine to medium SAND, some Gravel			
					3-7					
20		SS-5	24/20	20-22	3-2		Gray, medium stiff, CLAY & SILT	18.5' CLAY		
					3-3					
25		SS-6	24/12	25-27	4-4		Gray, loose, fine to medium SAND, little Silt, trace Gravel	23.5' SAND		
					5-7					

OBSERVED GROUND WATER EL. 12.2± FEBRUARY 5, 2019

BOT. OF WEST INTEGRAL ABUT. EL. 6.50

CONTINUATION

NOTES:
1. Water level checked prior to starting the second day of drilling.
2. The upper 15 feet of the boring was completed with 4-inch hollow stem augers.

Order of Sample Description (Modified Burmister)
1. Moisture Content: Dry, Moist, Wet
2. Soil Relative Density or Consistency
3. Color
4. Major Component: Should be capitalized
5. Minor Component: "and" - 35% to 50% minor grain size
"some" - 20% to 35% minor grain size
"little" - 10% to 20% minor grain size
"trace" - < 10% of minor grain size

PENETRATION RESISTANCE (N) GUIDE

Cohesionless Soils (Sands)	Cohesive Soils (Clays)
Relative Density / Blows per Foot	Consistency / Blows per Foot
Very Loose >> 0 - 4	Very Soft >> Below 2
Loose >> 4 - 10	Soft >> 2 - 4
Medium Dense >> 10 - 30	Medium Stiff >> 4 - 8
Dense >> 30 - 50	Stiff >> 8 - 15
Very Dense >> Over 50	Very Stiff >> 15 - 30
	Hard >> Over 30

CONTINUATION

ELEVATION (FEET): −15.00, −20.00, −25.00, −30.00, −35.00, −40.00

Depth	Case BPF	No.	Pen/ Rcvy	Depth (ft)	Blows per 6in	Field Test Results	Description and Classification	Stratum Description	Additional Data	Notes
30		SS-7A	24/14	30-31	10-7		SS-7A, Gray, medium dense, fine to medium SAND, little Gravel, trace Silt	SAND 31'		
		SS-7B		31-32	17-12		SS-7B, Gray, medium dense, fine to medium SAND, some Clayey Silt, some Gravel			
35		S-8	24/12	35-37	17-24		Gray, very dense, GRAVEL, some fine to coarse Sand, trace Clayey Silt	GLACIAL TILL		
					36-31					
40		SS-9	24/10	40-42	37-37		Gray, very dense, fine to medium SAND, little Gravel, little Silt			
					45-51					
45		SS-10	2/0	45-45.2	100 for 2"		No Recovery			3
		C-1	60/51	45.2-50.2	5:45 min		Gray, slightly to moderately weathered, moderately to highly fractured, medium grained, moderately hard, TONALITE/ GRANODIORITE	44' BEDROCK		
					6:30 min					
					6:45 min					
50					6:15 min					
					5:45 min					
		C-2	60/54	50.2-55.2	4:45 min		Gray, slightly to moderately weathered, moderately to highly fractured, medium grained, moderately hard, TONALITE/ GRANODIORITE			
					4:00 min					
					6:00 min					
55					6:30 min					
					6:30 min					
							Bottom of boring at 55.2 feet below ground surface with 10 foot rock core.	55.2'		

APPROX. PILE TIP EL. −27.00 (±)

NOTES:
3. Based on drilling action top of rock is at approximately 44 feet below ground surface.

Order of Sample Description (Modified Burmister)
1. Moisture Content: Dry, Moist, Wet
2. Soil Relative Density or Consistency
3. Color
4. Major Component: Should be capitalized
5. Minor Component: "and" - 35% to 50% minor grain size
"some" - 20% to 35% minor grain size
"little" - 10% to 20% minor grain size
"trace" - < 10% of minor grain size

PENETRATION RESISTANCE (N) GUIDE

Cohesionless Soils (Sands)	Cohesive Soils (Clays)
Relative Density / Blows per Foot	Consistency / Blows per Foot
Very Loose >> 0 - 4	Very Soft >> Below 2
Loose >> 4 - 10	Soft >> 2 - 4
Medium Dense >> 10 - 30	Medium Stiff >> 4 - 8
Dense >> 30 - 50	Stiff >> 8 - 15
Very Dense >> Over 50	Very Stiff >> 15 - 30
	Hard >> Over 30

NOTES:
1. LOCATION OF BORINGS FROM FEBRUARY 2019 ARE SHOWN ON THE PLAN THUS: BB−# ◔. LOCATION OF BORINGS FROM JULY 2022 ARE SHOWN ON THE PLANS AS THUS: RW−# ◔. LOCATIONS OF PROBES FROM JULY 2022 ARE SHOWN ON THE PLANS AS THUS: P# ●.
2. BORINGS ARE TAKEN FOR PURPOSE OF DESIGN AND SHOW CONDITIONS AT BORING POINTS ONLY, BUT DO NOT NECESSARILY SHOW THE NATURE OF THE MATERIALS TO BE ENCOUNTERED DURING CONSTRUCTION.
3. WATER LEVELS SHOWN ON THE BORINGS LOGS WERE OBSERVED AT THE TIME OF TAKING BORINGS AND DO NOT NECESSARILY SHOW THE TRUE GROUND WATER LEVEL.
4. FIGURES IN COLUMNS INDICATE NUMBER OF BLOWS REQUIRED TO DRIVE A 1⅜" I.D. SPLIT SPOON SAMPLER 6" USING A 140 POUND WEIGHT FALLING 30".
5. ALL BORINGS WERE MADE IN FEBRUARY, 2019 & JULY, 2022.
6. FEBRUARY 2019 & JULY 2022 BORINGS WERE MADE BY CAR−DEE TEST BORING & CONSTRUCTION, LOCATED AT 37 LINDEN ST., MEDFORD, MA 02155.
7. ALL PROBES FROM JULY 2022 WHERE MADE BY GEOSCIENCES TESTING AND RESEARCH INC. LOCATED AT 55 MIDDLESEX ST. NORTH CHELMSFORD, MA 01863
8. THE NORTH AMERICAN VERTICAL DATUM (NAVD) OF 1988 IS USED THROUGHOUT.
9. BORING LOG FOR BORING BB−2B IS NOT AVAILABLE. BORING BB−2B ENCOUNTERED OBSTRUCTION AT 10 FEET BELOW GROUND SURFACE AND RELOCATED TO BB−2C.

BORING LOG BB−1
SCALE: 1/4" = 1'−0"

COMMONWEALTH OF MASSACHUSETTS
MassDOT, Highway Division
APPROVED UNDER PROVISIONS OF MASS. GEN. LAWS CH 85 S 35

STATE BRIDGE ENGINEER — DATE 3/17/2023

MONTH DD, YYYY	ISSUED FOR CONSTRUCTION
DATE	DESCRIPTION
USE ONLY PRINTS OF LATEST DATE	

2839500_BR2-5(N11007_W20001).DWG Plotted on 15-Mar-2023 10:25 AM
CHAPTER 85 REVIEW 06-24-2021

GEOSCIENCES TESTING AND RESEARCH, INC.

55 Middlesex Street, Suite 225, North Chelmsford, MA.
Phone: (978) 251-9395 www.gtrinc.net

GTR ENGINEERING SINCE 1995

Project Name: Plummer Spring Road
Location: Newburyport, MA

Boring No. BB-2A
Page: 1 of 2
GTR Job #: 22.219
GTR Rep: C. George
Reviewer: C. George

Drilling Co. Car-Dee Corporation
Driller: Steve DeSimone Helper(s): Frank
Start Date: 2/5/2019 End Date: 2/6/2019
Gnd Surface Elev (ft): ~ 17.9'
Location: 808900.72 E, 3118159.80 N
Note: Truck mounted Deidrich D50 with Automatic Hammer

Equipment	Casing	Sampler	Core
Type	HW	SS	-
Size I.D.	4"	1.75"	-
Hammer Wt.	300 lb	140 lb	-
Hammer Fall	30 in	30 in	-

Groundwater		Depth (ft)		
Date	Time	Water	Casing	Hole
2/6	7am	6'	25'	

Sample Data

Depth	Case BPF	No.	Pen/ Rcvy	Depth (ft)	Blows per 6in	Field Test	Description and Classification	Stratum Description	Additional Data	Notes
		SS-1A	18/10	0.7-2.2	21-17		Dry, brown, dense, fine to medium SAND, little Silt, little Gravel	ASPHALT 8"		1,2
		SS-1B			39					
5		S-2	24/0	5-7	1-1		No Recovery			
					WOH for 12"					
		S-3	24/0	7-9	WOH for 24"		No Recovery			
10		SS-4	15/6	10-11.3	15-18		Wet, Brown, very dense, GRAVEL, little Sand, trace Silt	FILL		3
					50 for 3"					
15		SS-5	24/10	15-17	6-18		Wet, Brown, medium dense, fine to medium SAND, some Gravel, trace Clayey Silt, trace Wood Fibers			4
					9-9					
								18' PEAT		
20		SS-6	24/6	20-22	7-10		Gray, medium dense, GRAVEL, some fine Sand, trace Silt	20' GLACIAL TILL		
					12-16					
25		SS-7	24/7	25-27	46-10		Gray, medium dense,GRAVEL and fine to medium Sand, trace Clayey Silt			5
					14-14					
							Bottom of boring at 27 feet below ground surface due to battered casing.	27'		

ELEVATION (FEET): 15.00, 10.00, 5.00, 00.00, −5.00, −10.00

OBSERVED GROUND WATER EL. 11.9± FEBRUARY 6, 2019

BOT. OF EAST INTEGRAL ABUT. EL. 6.74

NOTES:
1. Water level checked prior to starting the second day of drilling.
2. The upper 20 feet of the boring was completed with 4-inch hollow stem augers.
3. Boulder/Cobbles encountered at 10 to 15 feet below ground surface
4. Peat/Organic Silt observed on the augers at approximately 18 to 20 feet below ground surface.
5. Due to obstructions encountered casing was battered to much to continue drilling. Casing removed and rig moved ahead for BB-2B

Order of Sample Description (Modified Burmister)

1. Moisture Content: Dry, Moist, Wet
2. Soil Relative Density or Consistency
3. Color
4. Major Component: Should be capitalized
5. Minor Component: "and" - 35% to 50% minor grain size
   "some" - 20% to 35% minor grain size
   "little" - 10% to 20% minor grain size
   "trace" - < 10% of minor grain size

PENETRATION RESISTANCE (N) GUIDE

Cohesionless Soils (Sands)	Cohesive Soils (Clays)
Relative Density / Blows per Foot	Consistency / Blows per Foot
Very Loose >> 0 - 4	Very Soft >> Below 2
Loose >> 4 - 10	Soft >> 2 - 4
Medium Dense >> 10 - 30	Medium Stiff >> 4 - 8
Dense >> 30 - 50	Stiff >> 8 - 15
Very Dense >> Over 50	Very Stiff >> 15 - 30
	Hard >> Over 30

NOTE:
FOR BORING NOTES SEE SHEET 3 OF 20.
SEE BORING LOG NOTE 5 (THIS SHEET) FOR INFORMATION ON BORING BB−2B.

BORING LOG BB−2A
SCALE: 1/4" = 1'−0"

COMMONWEALTH OF MASSACHUSETTS
MassDOT, Highway Division
APPROVED UNDER PROVISIONS OF MASS. GEN. LAWS CH 85 S 35

STATE BRIDGE ENGINEER — DATE 3/17/2023

MONTH DD, YYYY	ISSUED FOR CONSTRUCTION
DATE	DESCRIPTION
USE ONLY PRINTS OF LATEST DATE	

2839500_BR2-5(N11007_W20001).DWG Plotted on 15-Mar-2023 10:25 AM
CHAPTER 85 REVIEW 06-24-2021

NEWBURYPORT = WEST NEWBURY
PLUMMER SPRING ROAD

STATE	FED. AID PROJ. NO.	SHEET NO.	TOTAL SHEETS
MA	-	23	42
PROJECT FILE NO.		N/A	

BORING LOG BB-2C

GEOSCIENCES TESTING AND RESEARCH, INC.

55 Middlesex Street, Suite 225, North Chelmsford, MA.
Phone: (978) 251-9395 www.gtrinc.net

GTR ENGINEERING SINCE 1995

Project Name: Plummer Spring Road
Location: Newburyport, MA

Boring No. BB -2C
Page: 1 of 1
GTR Job #: 22.219
GTR Rep: C. George
Reviewer: C. George

Drilling Co. Car-Dee Corporation
Driller: Steve DeSimone Helper(s): Frank
Start Date: 2/6/2019 End Date: 2/6/2019
Gnd Surface Elev (ft): ~ 17.9'
Location: 808897.04 E, 3118156.24 E
Note: Truck mounted Deidrich D50 with Automatic Hammer

Equipment	Casing	Sampler	Core
Type	HW	SS	-
Size I.D.	4"	1.75"	-
Hammer Wt.	300 lb	140 lb	-
Hammer Fall	30 in	30 in	-

Groundwater		Depth (ft)		
Date	Time	Water	Casing	Hole
2/6	7am	6'	25'	
Results from boring BB-2A				

Sample Data

Depth	Case BPF	No.	Pen/ Rcvy	Depth (ft)	Blows per 6in	Field Test	Description and Classification
5							
10							
15							
20							
25							

Stratum / Additional Data / Notes

Description	Additional Data	Notes
ASPHALT 8"		1,2
FILL 18'		3
PEAT 20'		
GLACIAL TILL		

ELEVATION (FEET): 15.00, 10.00, 5.00, 00.00, −5.00, −10.00

OBSERVED GROUND WATER EL. 11.9± FEBRUARY 6, 2019

BOT. OF EAST INTEGRAL ABUT. EL. 6.74

CONTINUATION

NOTES:
1. Stratum description from boring BB-2A. Boring BB-2B encountered obstruction at 10 feet below ground surface and relocated to BB-2C.
2. The upper 10 feet of the boring was completed with 4-inch hollow stem augers.
3. Boulder/Cobbles encountered at 5 to 15 feet below ground surface

Order of Sample Description (Modified Burmister)
1. Moisture Content: Dry, Moist, Wet
2. Soil Relative Density or Consistency
3. Color
4. Major Component: Should be capitalized
5. Minor Component: "and" - 35% to 50% minor grain size
"some" - 20% to 35% minor grain size
"little" - 10% to 20% minor grain size
"trace" - < 10% of minor grain size

PENETRATION RESISTANCE (N) GUIDE

Cohesionless Soils (Sands)	Cohesive Soils (Clays)
Relative Density / Blows per Foot	Consistency / Blows per Foot
Very Loose >> 0 - 4	Very Soft >> Below 2
Loose >> 4 - 10	Soft >> 2 - 4
Medium Dense >> 10 - 30	Medium Stiff >> 4 - 8
Dense >> 30 - 50	Stiff >> 8 - 15
Very Dense >> Over 50	Very Stiff >> 15 - 30
	Hard >> Over 30

CONTINUATION

Sample Data

Depth	Case BPF	No.	Pen/ Rcvy	Depth (ft)	Blows per 6in	Field Test Results	Description and Classification
30		SS-8	24/10	30-32	15-14		Gray, dense, GRAVEL and fine to coarse Sand, trace Clayey Silt
					17-19		
35		S-9	24/8	35-37	27-36		Gray, very dense, GRAVEL, some fine to coarse Sand, trace Clayey Silt
					71-45		
40		SS-10	24/10	40-42	37-37		Gray, very dense, fine to medium SAND, little Gravel, little Clayey Silt
					45-51		
45							Bottom of boring at 42 feet below ground surface with no refusal encountered.
50							
55							

Stratum / Additional Data / Notes

Description	Additional Data	Notes
GLACIAL TILL		4
42'		

ELEVATION (FEET): −15.00, −20.00, −25.00, −30.00, −35.00, −40.00

APPROX. PILE TIP EL. −27.00 (±)

NOTES:
3. Based on drilling action a cobble/boulder was encountered at approximately 32 to 33 feet below ground surface.

Order of Sample Description (Modified Burmister)
1. Moisture Content: Dry, Moist, Wet
2. Soil Relative Density or Consistency
3. Color
4. Major Component: Should be capitalized
5. Minor Component: "and" - 35% to 50% minor grain size
"some" - 20% to 35% minor grain size
"little" - 10% to 20% minor grain size
"trace" - < 10% of minor grain size

PENETRATION RESISTANCE (N) GUIDE

Cohesionless Soils (Sands)	Cohesive Soils (Clays)
Relative Density / Blows per Foot	Consistency / Blows per Foot
Very Loose >> 0 - 4	Very Soft >> Below 2
Loose >> 4 - 10	Soft >> 2 - 4
Medium Dense >> 10 - 30	Medium Stiff >> 4 - 8
Dense >> 30 - 50	Stiff >> 8 - 15
Very Dense >> Over 50	Very Stiff >> 15 - 30
	Hard >> Over 30

NOTE:
FOR BORING NOTES SEE SHEET 3 OF 20.
SEE BORING LOG NOTE 1 (THIS SHEET) FOR INFORMATION ON BORING BB−2B.

BORING LOG BB−2C
SCALE: 1/4" = 1'−0"

COMMONWEALTH OF MASSACHUSETTS
MassDOT, Highway Division
APPROVED UNDER PROVISIONS OF MASS. GEN. LAWS CH 85 S 35

STATE BRIDGE ENGINEER — DATE 3/17/2023

DATE	DESCRIPTION
MONTH DD, YYYY	ISSUED FOR CONSTRUCTION
USE ONLY PRINTS OF LATEST DATE	

2839500_BR2-5(N11007_W20001).DWG Plotted on 15-Mar-2023 10:25 AM
CHAPTER 85 REVIEW 06-24-2021

NEWBURYPORT = WEST NEWBURY
PLUMMER SPRING ROAD

STATE	FED. AID PROJ. NO.	SHEET NO.	TOTAL SHEETS
MA	-	24	42
PROJECT FILE NO.		N/A	

PROPOSED PLAN & ELEVATION

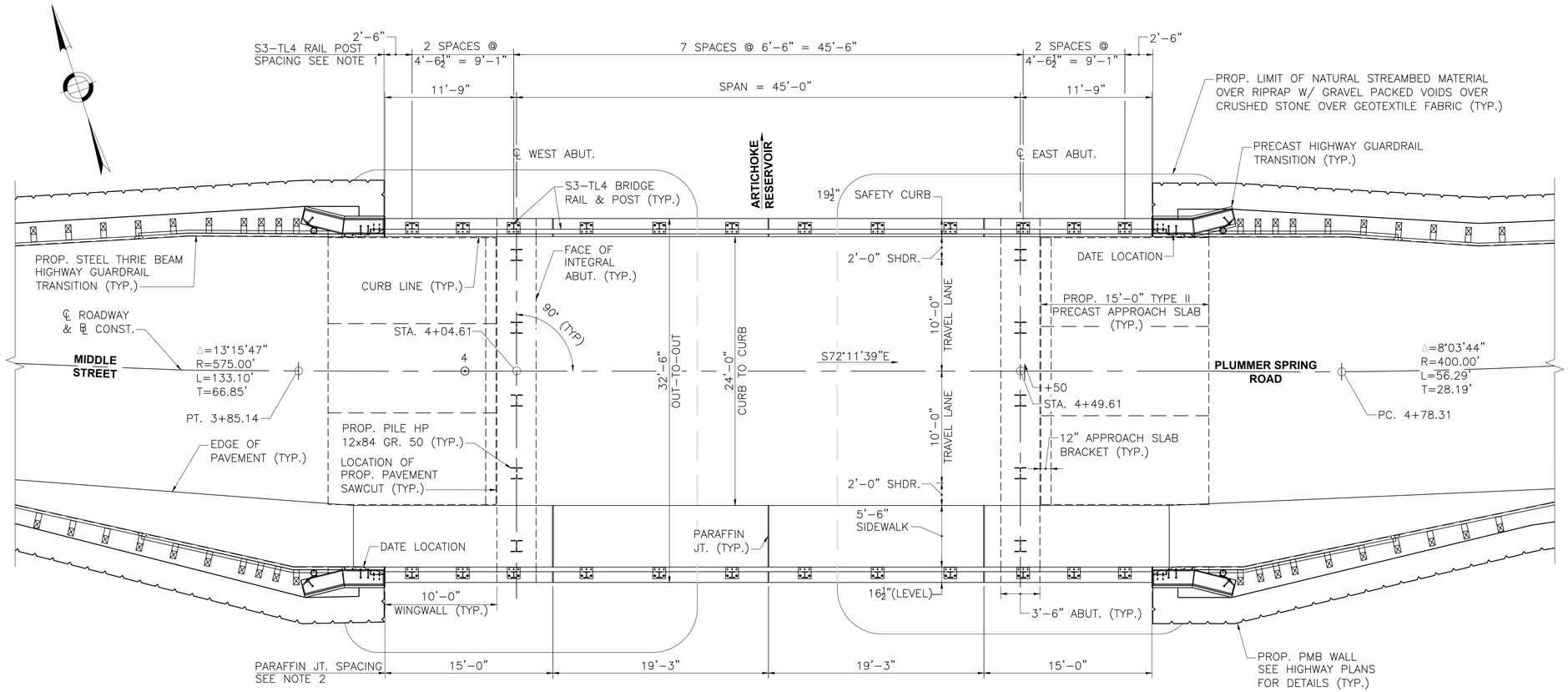

GENERAL PLAN

SCALE: 3/16" = 1'-0"

NOTES:

1. BRIDGE RAIL POST SPACING IS DIMENSIONED FROM FACE OF PRECAST HIGHWAY TRANSITION TO CENTER LINE OF POST.
2. PARAFFIN JOINT IS DIMENSIONED FROM START OF BRIDGE SAFETY CURB TO CENTER LINE OF JOINT.
3. SEE SHEET 14 & 15 OF 20 FOR ADDITIONAL ELEVATIONS.
4. PMB WALLS NOT SHOWN IN ELEVATION FOR CLARITY.
5. CONTRACTOR TO REFER TO PERMIT DRAWINGS, WITHIN THE ISSUED PERMITS CONTAINED IN THE CONTRACT DOCUMENTS, FOR LIMITS OF THE PROPOSED CONTROL OF WATER SYSTEM.

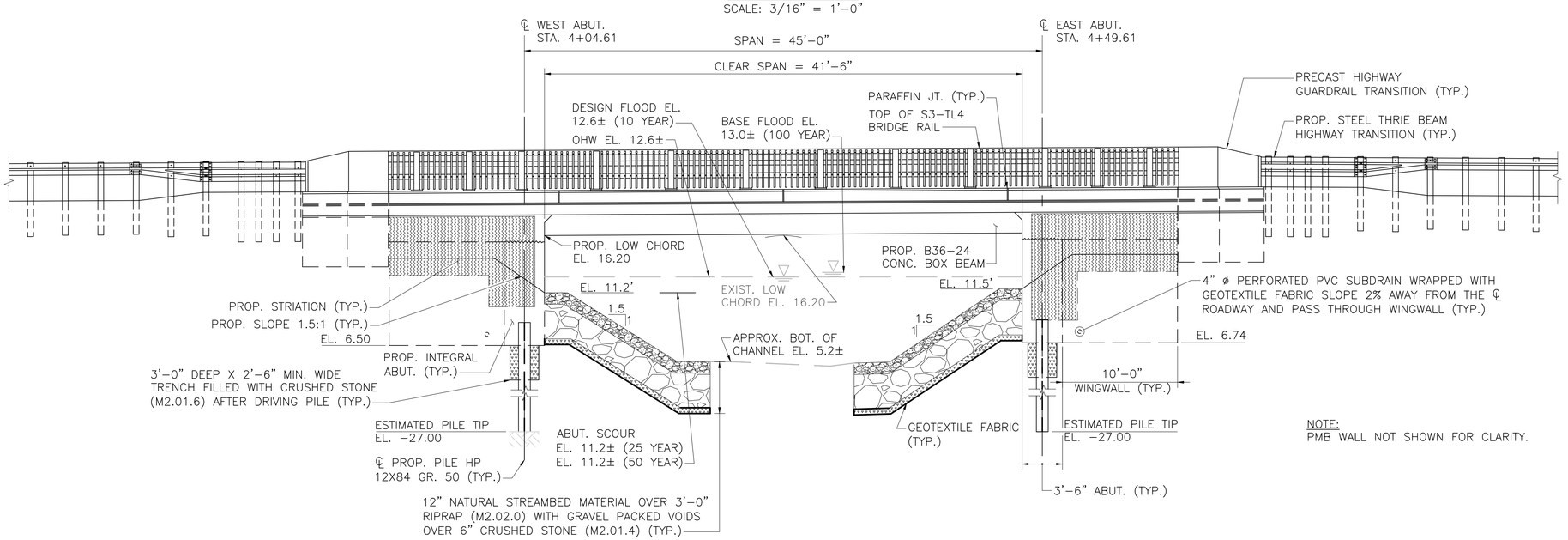

NOTE:
PMB WALL NOT SHOWN FOR CLARITY.

PROPOSED SOUTH ELEVATION

SCALE: 3/16" = 1'-0"

COMMONWEALTH OF MASSACHUSETTS
MassDOT, Highway Division
APPROVED UNDER PROVISIONS OF MASS. GEN. LAWS CH 85 S 35

STATE BRIDGE ENGINEER — 3/17/2023 DATE

DATE	DESCRIPTION
MONTH DD, YYYY	ISSUED FOR CONSTRUCTION
USE ONLY PRINTS OF LATEST DATE	

2839500_BR6 8-16(N11007_W20001).DWG Plotted on 15-Mar-2023 10:25 AM
CHAPTER 85 REVIEW 06-24-2021

NEWBURYPORT = WEST NEWBURY
PLUMMER SPRING ROAD

STATE	FED. AID PROJ. NO.	SHEET NO.	TOTAL SHEETS
MA	-	25	42
PROJECT FILE NO.		N/A	

EXISTING CONDITIONS

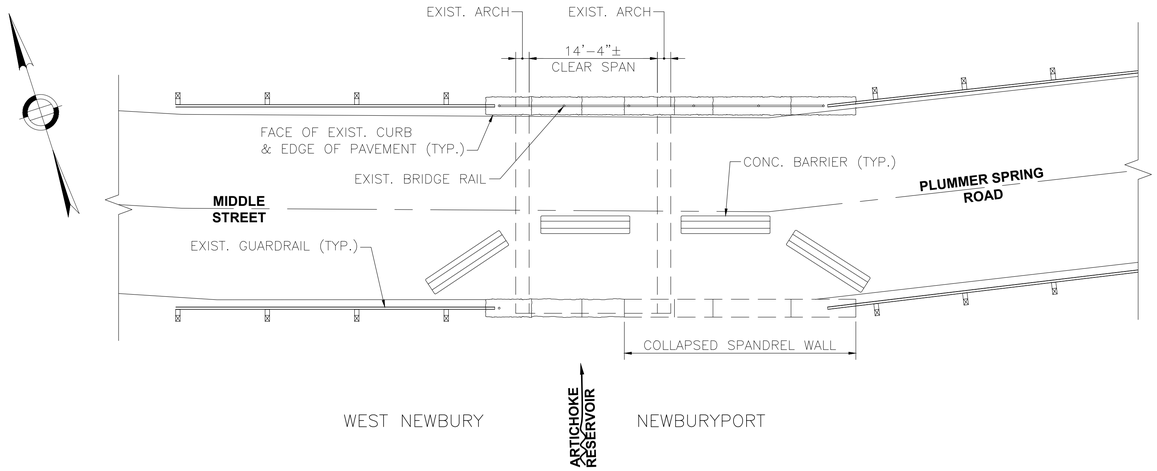

EXISTING PLAN
SCALE: 1/8" = 1'-0"

NOTES:

1. THE ENTIRE EXISTING BRIDGE AND SUBSTRUCTURE WILL BE DEMOLISHED INCLUDING ALL WINGWALLS, SPANDREL WALLS, ARCH AND FOOTINGS ETC.
2. SKETCHES WERE BASED OFF LIMITED EXPLORATORY INVESTIGATION AND ARE CONCEPTUAL ONLY. THE CONTRACTOR SHALL DETERMINE AND ESTABLISH ALL DIMENSIONS AND DETAILS NECESSARY FOR COMPLETION OF ALL WORK BY FIELD MEASUREMENTS AND SURVEY. THE CONTRACTOR SHALL BE RESPONSIBLE FOR ADEQUACY AND ACCURACY THEREOF, AND SHALL NOT ORDER ANY MATERIAL OR COMMENCE ANY FABRICATION UNTIL HE/SHE HAS MADE THE REQUIRED MEASUREMENTS AND THE EXTENT OF THE PROPOSED WORK HAS BEEN APPROVED BY THE ENGINEER.
3. ALL DEMOLITION ACTIVITIES SHALL OCCUR IN THE DRY.
4. CONTRACTOR SHALL SUBMIT A CONTROL OF WATER, TEMPORARY PROTECTIVE SHIELDING, DEMOLITION PLAN AND PROCEDURE BEFORE THE START OF DEMOLITION.
5. THE CONTRACTOR SHALL DISPOSE OF ANY DEMOLITION DEBRIS, CONSTRUCTION DEBRIS, WOOD WASTES, CONTAMINATED SOILS, HAZARDOUS MATERIALS AND OTHER MATERIALS OR SPECIAL WASTES IN STRICT ACCORDANCE WITH APPLICABLE LAWS AND REGULATIONS.
6. THE CONTRACTOR MUST COORDINATE ALL WORK WITH THE CITY OF NEWBURYPORT, THE WATER DEPARTMENT, THE TOWN OF WEST NEWBURY, THE ENGINEER AND ANY EFFECTED ABUTTERS. WORK SHALL NOT PROCEED WITHOUT WRITTEN APPROVAL FROM THE CITY OF NEWBURYPORT AND THE TOWN OF WEST NEWBURY.

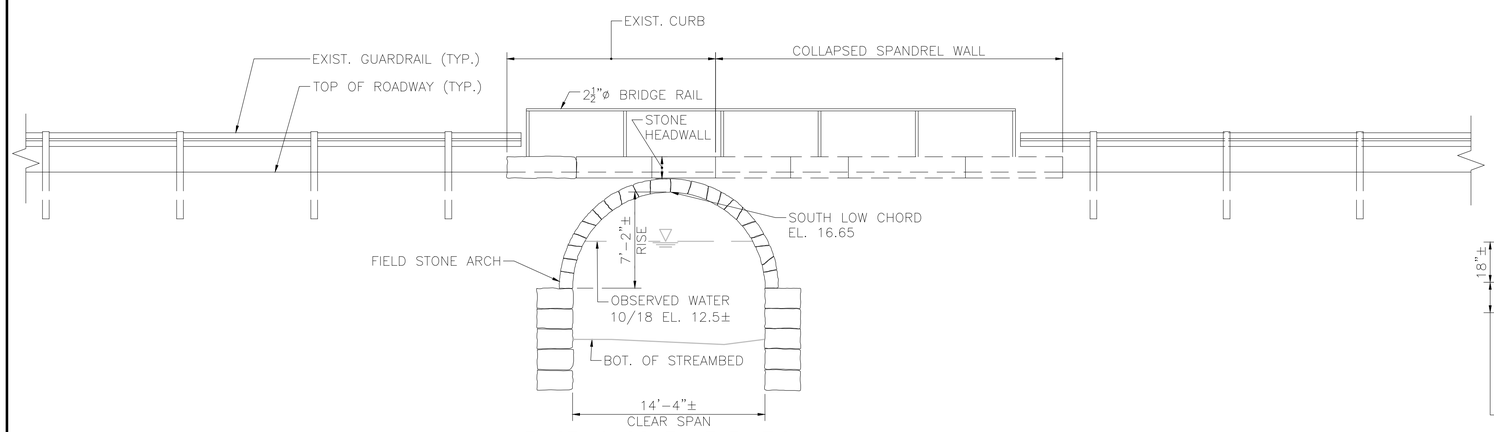

EXISTING SOUTH ELEVATION
SCALE: 3/16" = 1'-0"

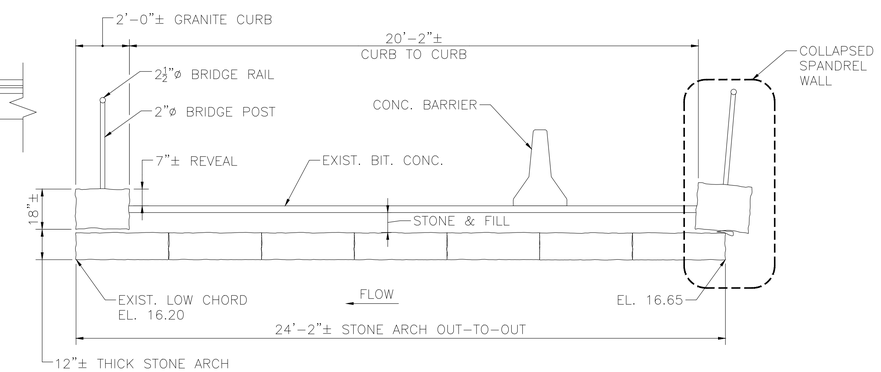

EXISTING TRANSVERSE SECTION
SCALE: 3/8" = 1'-0"

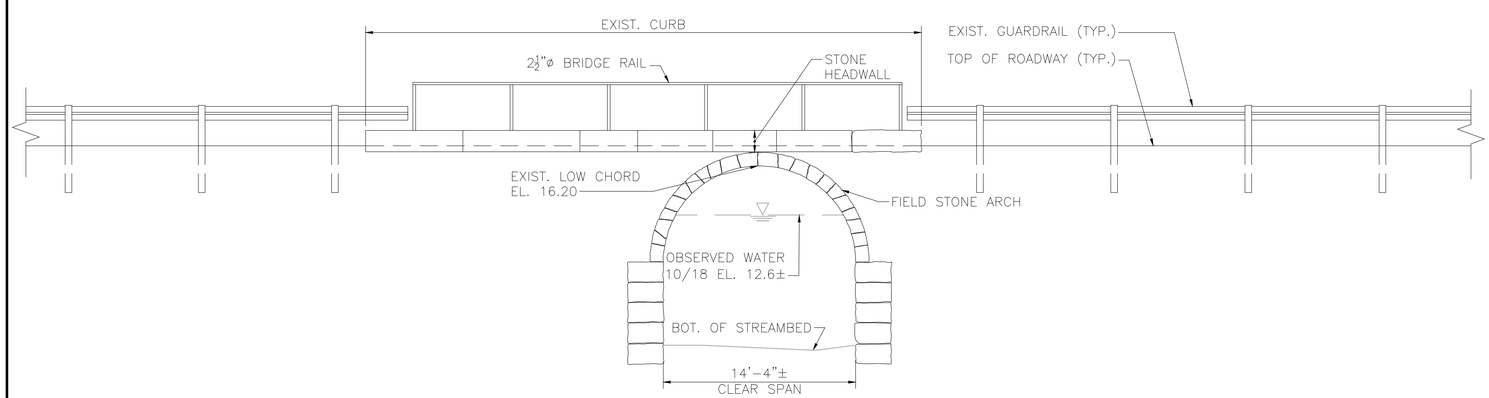

EXISTING NORTH ELEVATION
SCALE: 3/16" = 1'-0"

COMMONWEALTH OF MASSACHUSETTS
MassDOT, Highway Division
APPROVED UNDER PROVISIONS OF MASS. GEN. LAWS CH 85 S 35

STATE BRIDGE ENGINEER — DATE 3/17/2023

DATE	DESCRIPTION
MONTH DD, YYYY	ISSUED FOR CONSTRUCTION
USE ONLY PRINTS OF LATEST DATE	

SHEET 7 OF 20 SHEETS BRIDGE NO. N-11-007 = W-20-001 (CBR)

2839500_BR7(N11007_W20001).DWG Plotted on 15-Mar-2023 10:26 AM

CHAPTER 85 REVIEW 06-24-2021

NEWBURYPORT = WEST NEWBURY
PLUMMER SPRING ROAD

STATE	FED. AID PROJ. NO.	SHEET NO.	TOTAL SHEETS
MA	-	26	42
PROJECT FILE NO.		N/A	

ABUTMENT PLAN & SECTION

NOTES:
1. ALL ELEVATIONS ARE SHOWN AT ABUTMENT CENTERLINE.
2. DETAILS ABOVE DECK LEVEL ARE NOT SHOWN FOR CLARITY.
3. TOP OF PEDESTAL ELEVATIONS DO NOT INCLUDE ERECTION PAD THICKNESS.

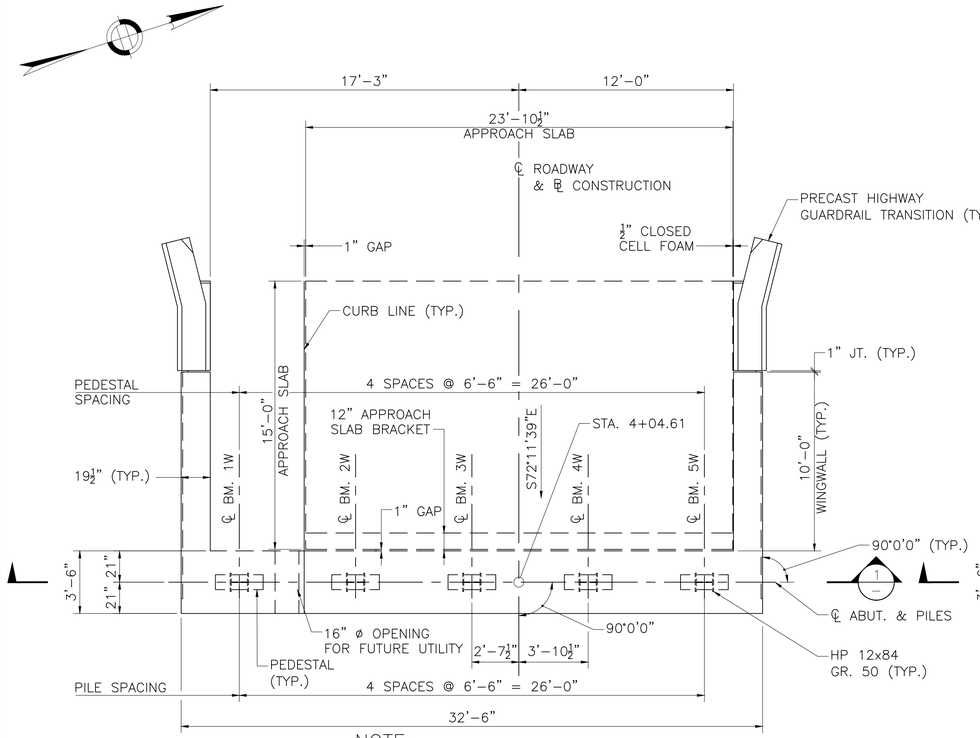

NOTE:
BEAMS NOT SHOWN FOR CLARITY.

WEST ABUTMENT PLAN
SCALE: 1/4" = 1'-0"

TOP OF PEDESTAL ELEVATIONS			
BM. #1W	16.11	BM. #1E	16.35
BM. #2W	16.24	BM. #2E	16.48
BM. #3W	16.37	BM. #3E	16.61
BM. #4W	16.35	BM. #4E	16.58
BM. #5W	16.21	BM. #5E	16.45

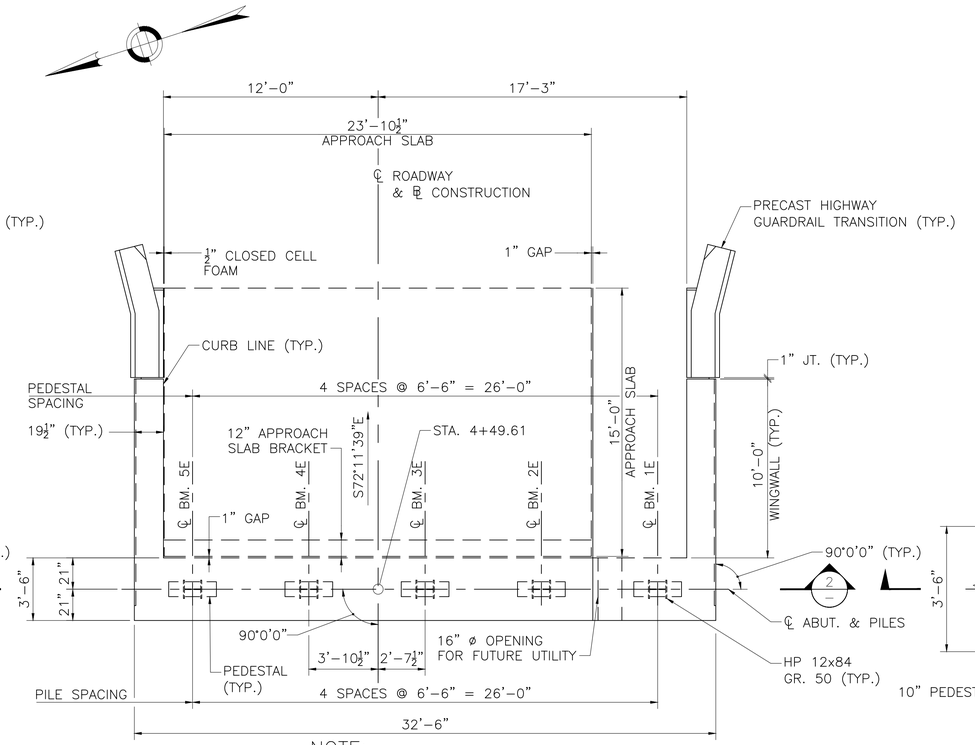

NOTE:
BEAMS NOT SHOWN FOR CLARITY.

EAST ABUTMENT PLAN
SCALE: 1/4" = 1'-0"

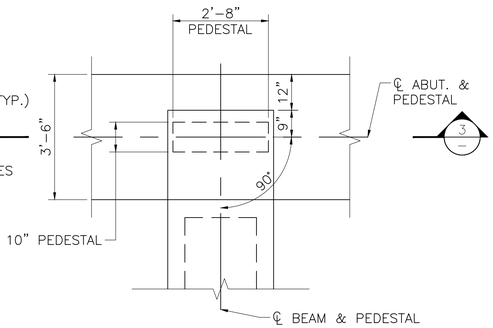

PEDESTAL PLAN
SCALE: 1/2" = 1'-0"

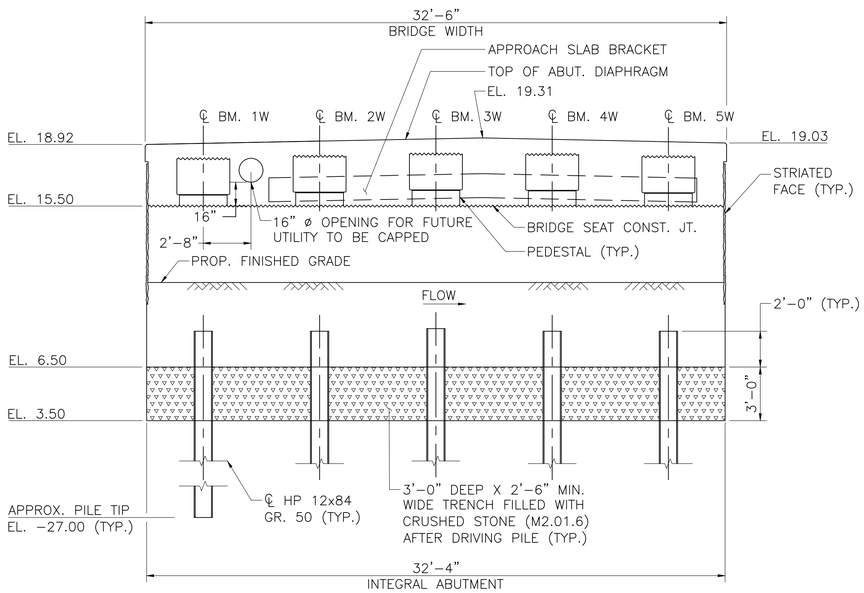

SECTION 1 – WEST ABUTMENT
SCALE: 1/4" = 1'-0"

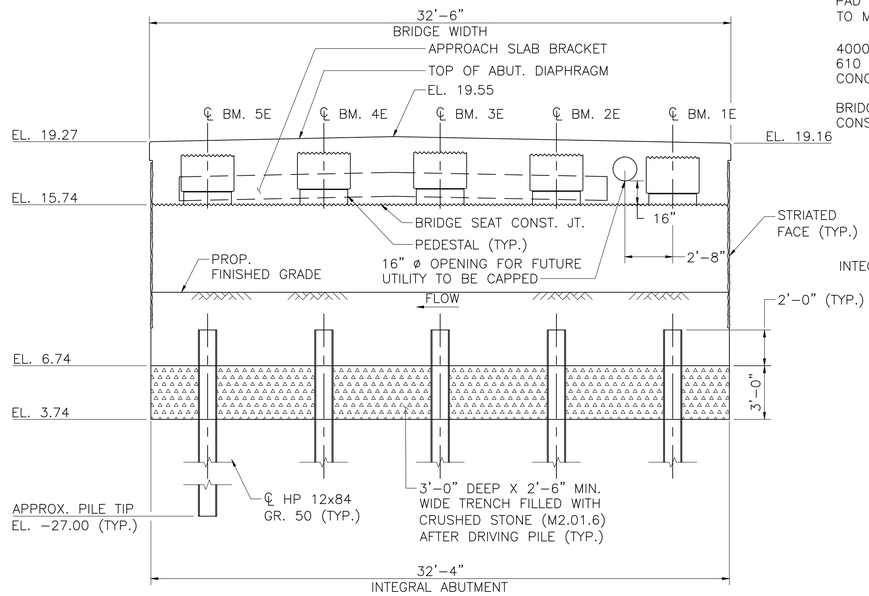

SECTION 2 – EAST ABUTMENT
SCALE: 1/4" = 1'-0"

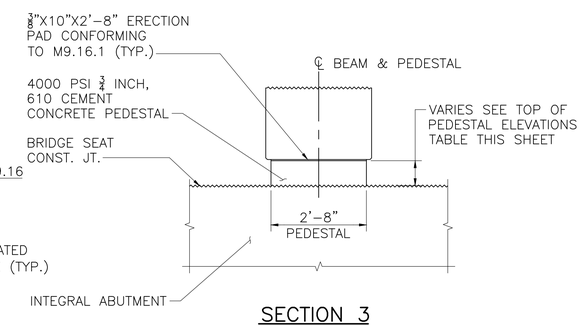

SECTION 3
SCALE: 1/2" = 1'-0"

COMMONWEALTH OF MASSACHUSETTS
MassDOT, Highway Division
APPROVED UNDER PROVISIONS OF MASS. GEN. LAWS CH 85 S 35

STATE BRIDGE ENGINEER — DATE 3/17/2023

DATE	DESCRIPTION
MONTH DD, YYYY	ISSUED FOR CONSTRUCTION
USE ONLY PRINTS OF LATEST DATE	

2839500_BR6 8-16(N11007_W20001).DWG Plotted on 15-Mar-2023 10:26 AM
CHAPTER 85 REVIEW 06-24-2021

NEWBURYPORT = WEST NEWBURY
PLUMMER SPRING ROAD

STATE	FED. AID PROJ. NO.	SHEET NO.	TOTAL SHEETS
MA	-	27	42
PROJECT FILE NO.		N/A	

ABUTMENT DETAILS

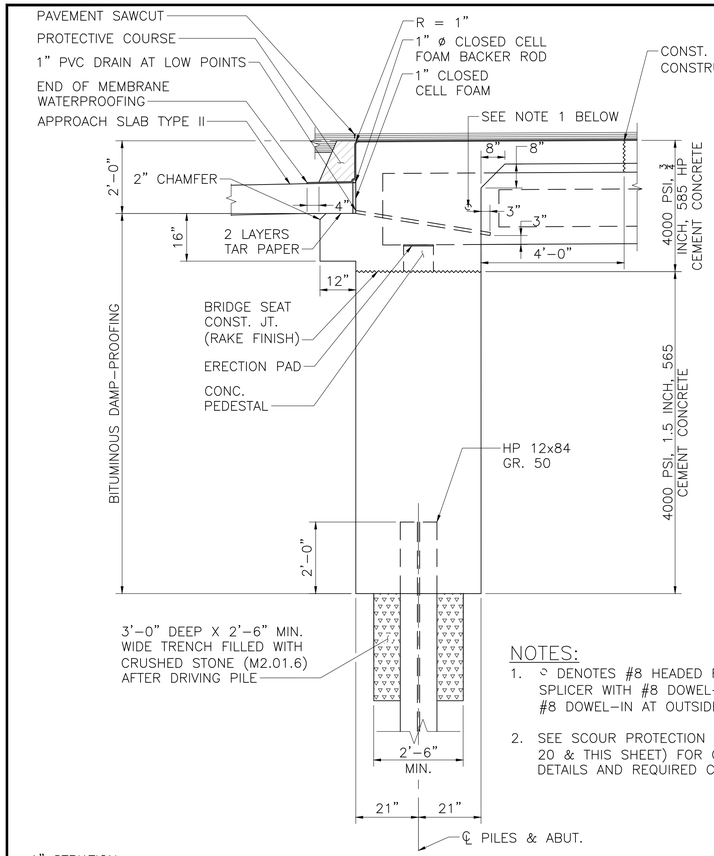

ABUTMENT SECTION
SCALE: 1/2" = 1'-0"

NOTES:
1. ⊃ DENOTES #8 HEADED REINFORCEMENT BAR SPLICER WITH #8 DOWEL-IN. USE 90° HOOK #8 DOWEL-IN AT OUTSIDES OF FASCIA BEAMS.
2. SEE SCOUR PROTECTION DETAIL (SHEET 6 OF 20 & THIS SHEET) FOR GROUND TREATMENT DETAILS AND REQUIRED CLEARANCES.

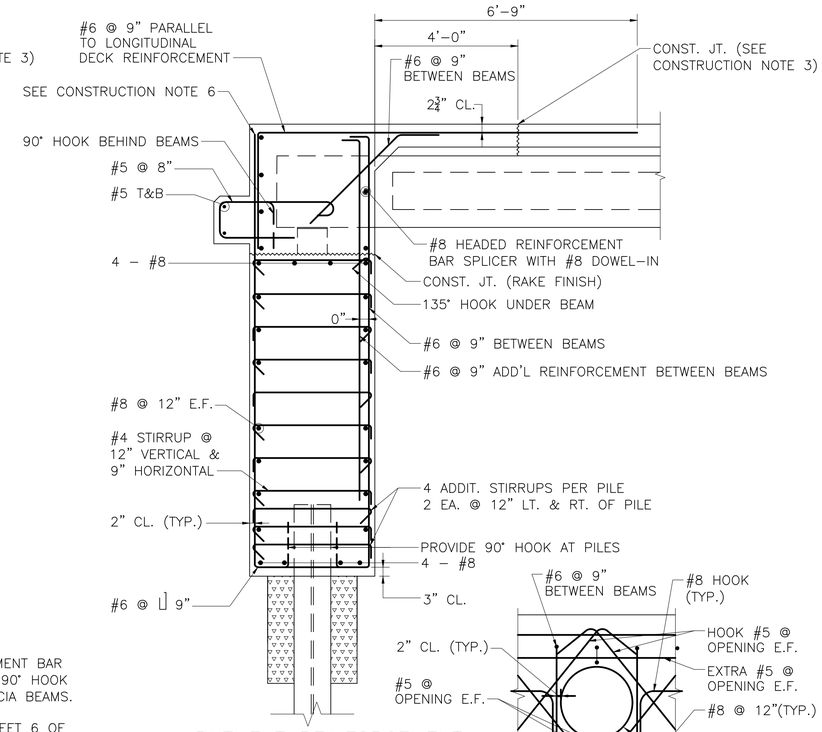

ABUTMENT REINFORCEMENT
SCALE: 1/2" = 1'-0"

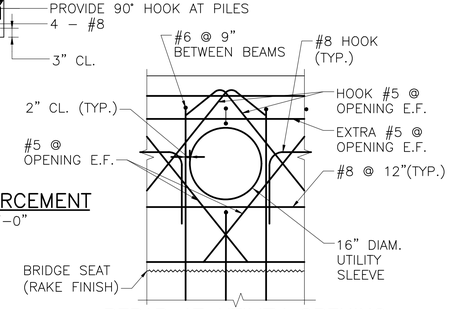

REBAR AT UTILITY OPENING
SCALE: 3/4" = 1'-0"

CONSTRUCTION NOTES:
1. ALL REINFORCEMENT SHALL BE COATED.
2. DECK SLAB REINFORCEMENT NOT SHOWN FOR CLARITY. CONTINUE DECK SLAB REINFORCEMENT TO BACK OF ABUTMENT.
3. THE CONTRACTOR SHALL FOLLOW THE DECK PLACEMENT SEQUENCE AS SHOWN ON THESE CONSTRUCTION DRAWINGS (SEE SHEET 13 OF 20).
4. ALL CONCRETE SHALL CONTAIN SUPERPLASTICIZER TO ENSURE ADEQUATE CONSOLIDATION.
5. BOTH ABUTMENTS SHALL BE BACKFILLED SIMULTANEOUSLY. NO MORE THAN TWO (2) FEET OF DIFFERENTIAL BACKFILL HEIGHT SHALL BE PERMITTED. BACKFILLING SHALL NOT BEGIN UNTIL THE ABUTMENT AND DECK CONSTRUCTION IS COMPLETE.
6. THE CONTRACTOR MAY USE MECHANICAL REINFORCING BAR SPLICERS IN LIEU OF TENSION LAP SPLICES TO FACILITATE CONSTRUCTION. HOWEVER, NO ADDITIONAL COMPENSATION WILL BE PROVIDED FOR THE USE OF MECHANICAL REINFORCING BAR SPLICERS.
7. THE TOP OF THE APPROACH SLAB WATERPROOFING PROTECTIVE COURSE SHALL MATCH THE TOP OF THE ABUTMENT DIAPHRAGM.

INTEGRAL ABUTMENT PILE NOTES:
1. A TRENCH WITH A DEPTH OF 3'-0" AND A MINIMUM WIDTH OF 2'-6" SHALL BE CONSTRUCTED DIRECTLY BELOW THE BOTTOM OF THE PILE CAP ELEVATION. AFTER THE PILES ARE DRIVEN, THE TRENCH SHALL BE FILLED WITH CRUSHED STONE (M2.01.6).
2. ALL SPLICES SHALL HAVE COMPLETE PENETRATION BUTT WELDS. THERE SHALL BE NO SPLICES WITHIN THE TOP 20 FEET OF PILE. SPLICE WELDS SHALL BE 100% UT.
3. THE FACTORED AXIAL DESIGN LOAD PER PILE IS 200 KIPS AS PER AASHTO LRFD BRIDGE DESIGN SPECIFICATIONS STRENGTH I LOAD COMBINATION.
4. THE FACTORED STRUCTURAL RESISTANCE PER PILE IS 615 KIPS AND IS THE PRODUCT OF THE NOMINAL STRUCTURAL RESISTANCE OF 1230 KIPS AND A RESISTANCE FACTOR OF 0.50.
5. THE FACTORED GEOTECHNICAL PILE RESISTANCE IS 306 KIPS. THE ESTIMATED TIP ELEVATION IS -27 FEET. HEAVY DUTY PILE SHOES SHALL BE INSTALLED ON THE TIPS OF ALL PILES. PREFABRICATED PILE SHOES MAY BE USED IF APPROVED BY THE ENGINEER.
6. DETERMINATION OF THE DRIVEN PILE RESISTANCE, PILE DRIVING CRITERIA, AND PILE INTEGRITY SHALL BE PERFORMED USING THE PDA DRIVING/TESTING METHOD WITH A RESISTANCE FACTOR OF 0.65. PILE SHALL BE INSTALLED TO ACHIEVE A FACTORED DRIVEN RESISTANCE EQUAL TO OR GREATER THAN THE FACTORED AXIAL DESIGN LOAD.
7. THE CONTRACTOR SHALL SUBMIT A PILE SCHEDULE, PILE INSTALLATION, AND PILE DRIVING/TESTING PLAN FOR REVIEW AND APPROVAL OF THE ENGINEER.
8. PILES SHALL CONFORM TO AASHTO M270 GRADE 50.
9. ONE (1) INDICATOR PILE AT EACH ABUTMENT SHALL BE TESTED DURING THE END OF INITIAL DRIVING AND DURING RESTRIKE A MINIMUM OF 24 HOURS AFTER INITIAL DRIVING WITH A PDA.
10. THE MINIMUM REQUIRED TIP ELEVATION TO THE POINT OF FIXITY IS APPROXIMATELY EL. -18.5. THE PILES MAY NEED TO BE DRIVEN GREATER THAN THE REQUIRED GEOTECHNICAL PILE RESISTANCE TO ACHIEVE THE MINIMUM TIP ELEVATION.

REQUIRED PILE LOCATION TOLERANCES:
1. CONFORMANCE TO THE FOLLOWING TOLERANCES IS OF EXTREME IMPORTANCE TO FOUNDATIONS OF THIS TYPE.
2. PRIOR TO DRIVING, EACH ABUTMENT PILE SHALL BE HELD BY A TEMPLATE WITHIN 1" OF PLAN LOCATION.
3. AFTER EACH ABUTMENT PILE IS DRIVEN, THE TOP OF THE PILE SHALL BE WITHIN 3" OF PLAN LOCATION

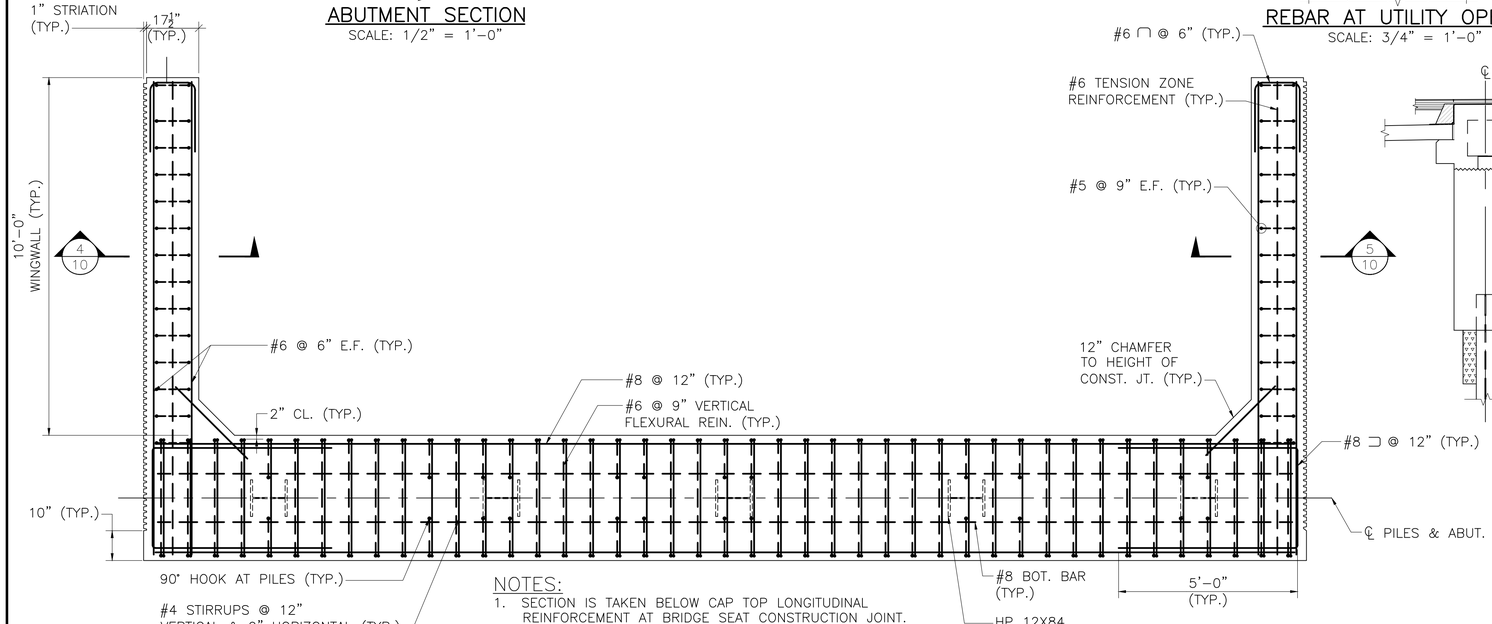

NOTES:
1. SECTION IS TAKEN BELOW CAP TOP LONGITUDINAL REINFORCEMENT AT BRIDGE SEAT CONSTRUCTION JOINT.
2. EAST ABUTMENT SHOWN, WEST ABUTMENT SIMILAR.

HORIZONTAL SECTION
SCALE: 1/2" = 1'-0"

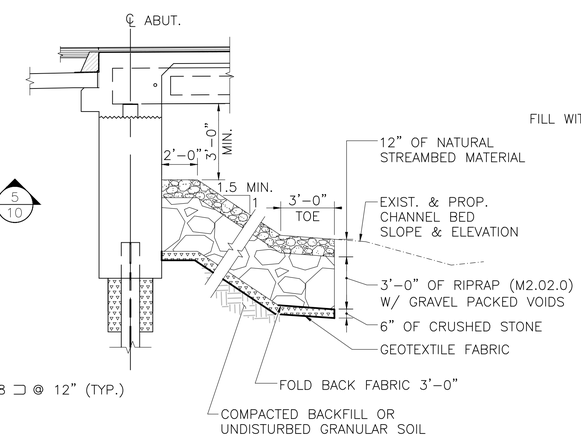

SCOUR PROTECTION DETAIL
SCALE: 1/4" = 1'-0"

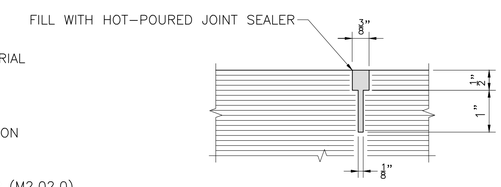

PAVEMENT SAWCUT DETAIL
NOT TO SCALE

COMMONWEALTH OF MASSACHUSETTS
MassDOT, Highway Division
APPROVED UNDER PROVISIONS OF MASS. GEN. LAWS CH 85 S 35

STATE BRIDGE ENGINEER — 3/17/2023 DATE

MONTH DD, YYYY	ISSUED FOR CONSTRUCTION
DATE	DESCRIPTION
USE ONLY PRINTS OF LATEST DATE	

2839500_BR6 8-16(N11007_W20001).DWG Plotted on 15-Mar-2023 10:26 AM
CHAPTER 85 REVIEW 06-24-2021
Drawing name: \\Vhb\proj\Projects-905\28390\Structural\Drawings\Proposed\2839500_BR6 8-16(N11007_W20001).dwg
Plotted on Wednesday, MAR 15, 2023 - 10:25am by MBRIDGER

NEWBURYPORT = WEST NEWBURY
PLUMMER SPRING ROAD

STATE	FED. AID PROJ. NO.	SHEET NO.	TOTAL SHEETS
MA	-	28	42
PROJECT FILE NO.		N/A	

WINGWALL & STRIATION DETAILS

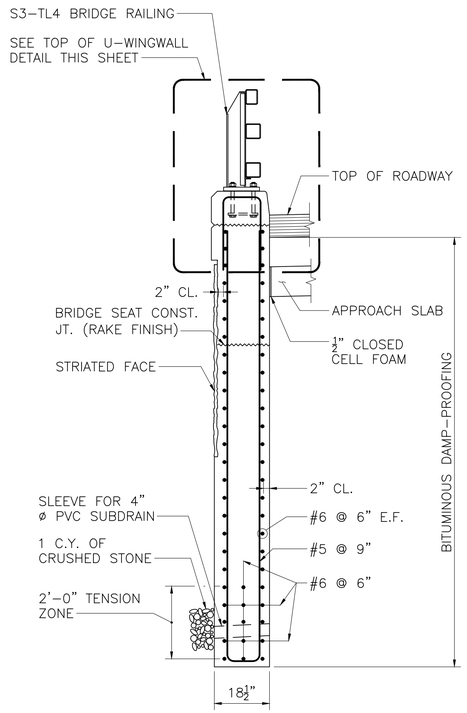

SECTION 4 – NORTH WINGWALL
SCALE: 1/2" = 1'-0"

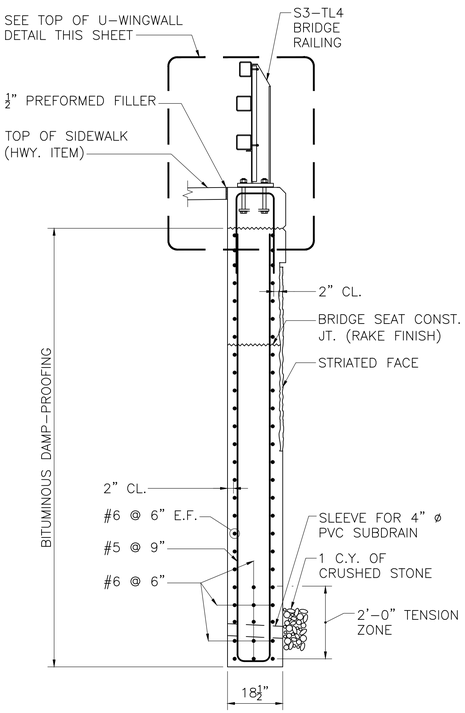

SECTION 5 – SOUTH WINGWALL
SCALE: 1/2" = 1'-0"

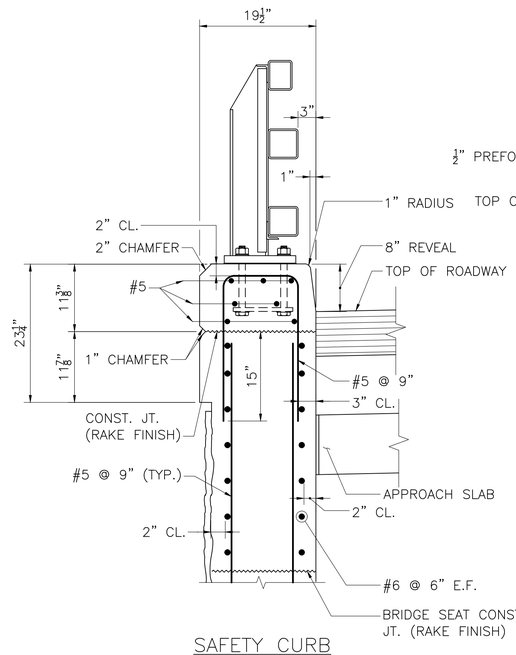

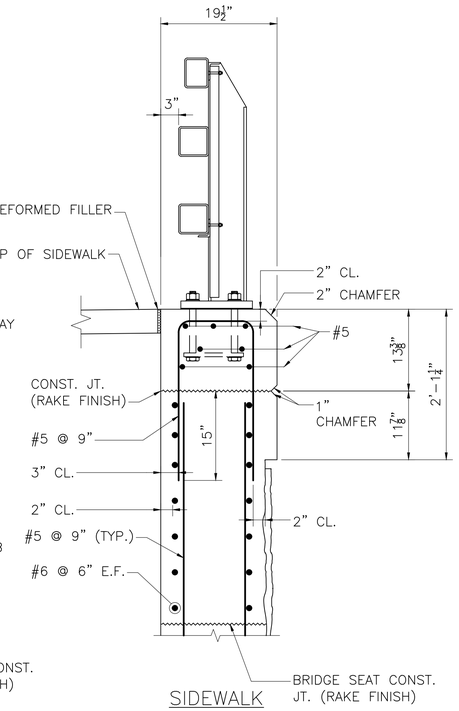

TOP OF U-WINGWALL
SCALE: 1" = 1'-0"

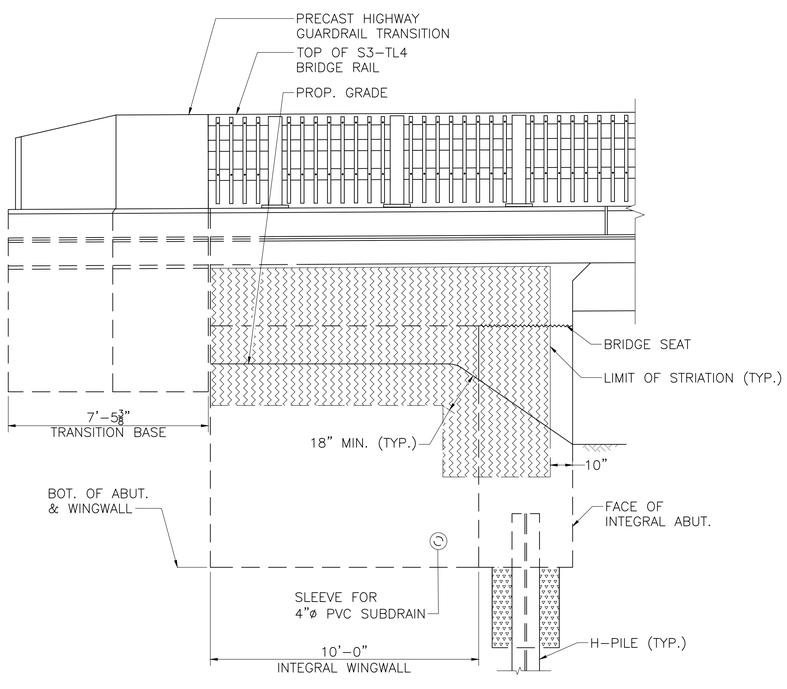

STRIATION ELEVATION
SCALE: 3/8" = 1'-0"

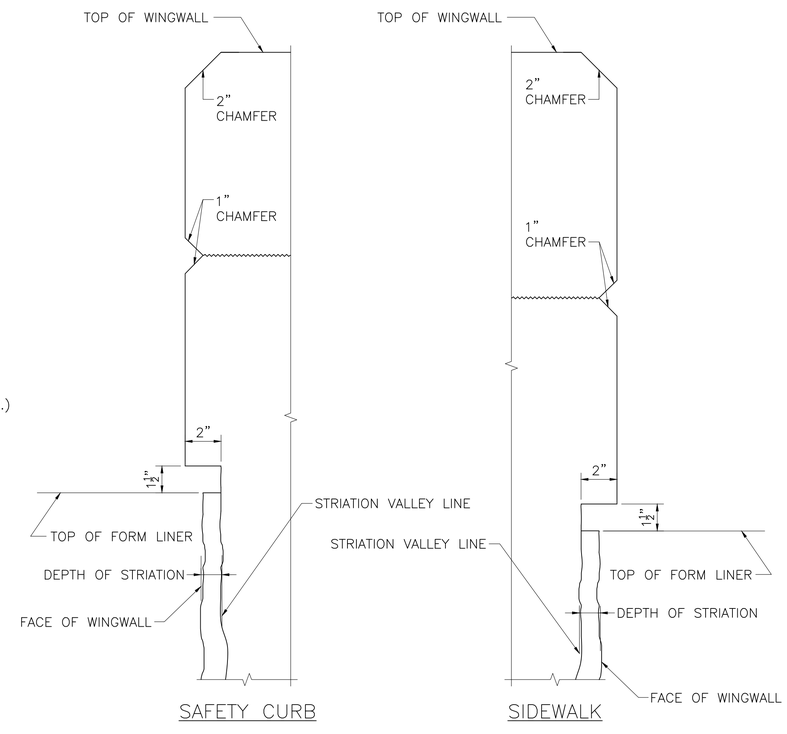

STRIATION DETAIL AT TOP OF WINGWALL
SCALE: 3" = 1'-0"

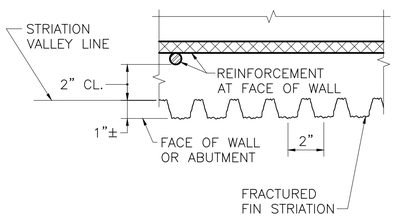

STRIATION NOTE:
THE CONTRACTOR SHALL MAKE SURE THAT THE STRIATION FINS ARE PLUMB AND LINED UP VERTICALLY FROM PANEL TO PANEL FOR THE FULL HEIGHT OF THE WALL.

TYPICAL STRIATION DETAIL
SCALE: 3" = 1'-0"

COMMONWEALTH OF MASSACHUSETTS
MassDOT, Highway Division
APPROVED UNDER PROVISIONS OF MASS. GEN. LAWS CH 85 S 35

STATE BRIDGE ENGINEER — DATE 3/17/2023

MONTH DD, YYYY	ISSUED FOR CONSTRUCTION
DATE	DESCRIPTION
USE ONLY PRINTS OF LATEST DATE	

2839500_BR6 8-16(N11007_W20001).DWG Plotted on 15-Mar-2023 10:26 AM
CHAPTER 85 REVIEW 06-24-2021

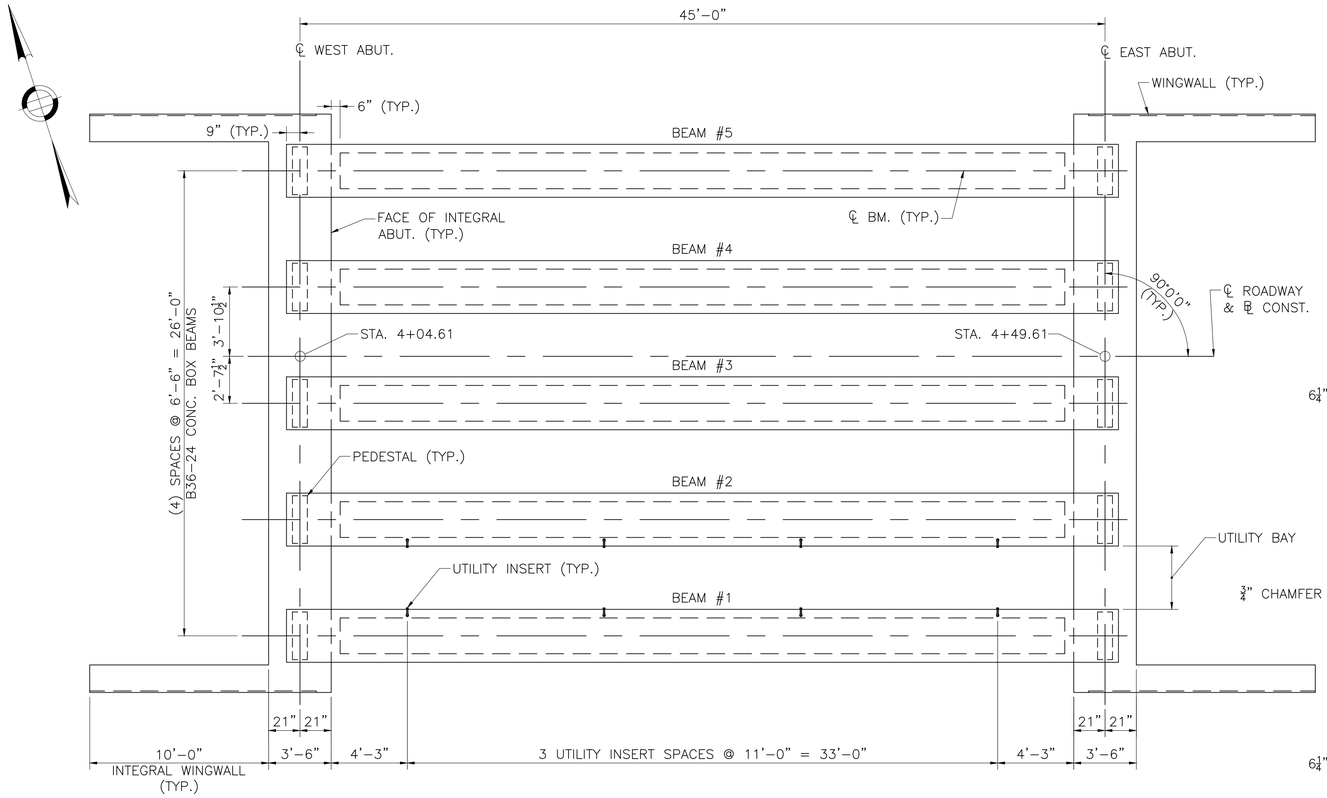

FRAMING PLAN
SCALE: 1/4" = 1'-0"

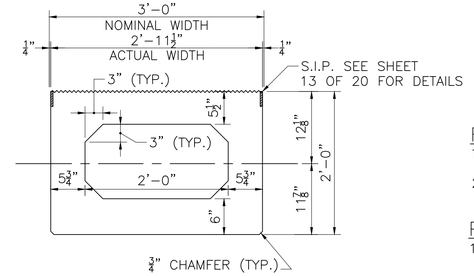

BOX BEAM PROPERTIES B36-24
SCALE: 1" = 1'-0"

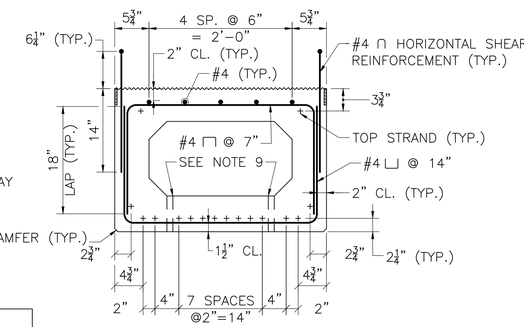

TYPICAL MIDSPAN SECTION
SCALE: 1" = 1'-0"

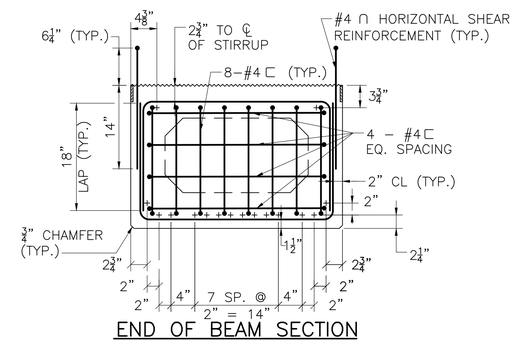

END OF BEAM SECTION
SCALE: 1" = 1'-0"

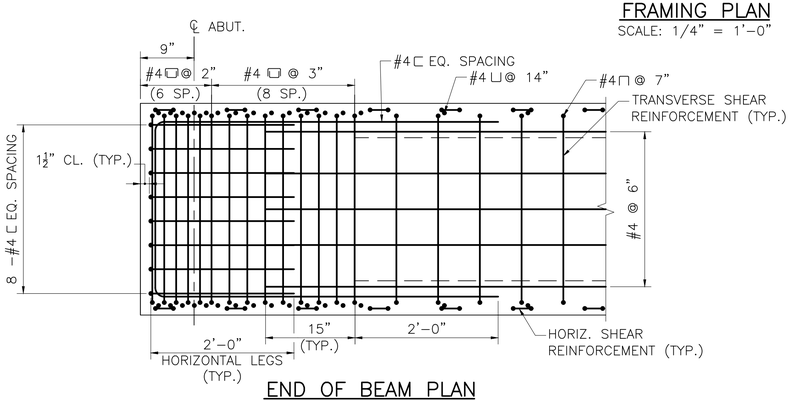

END OF BEAM PLAN
SCALE: 1" = 1'-0"

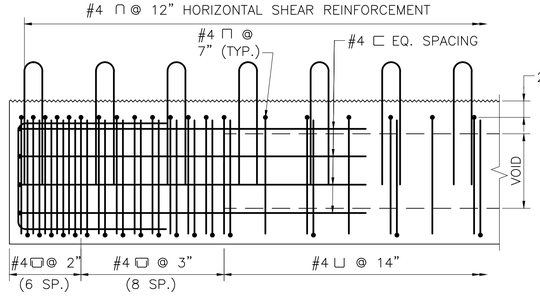

LONGITUDINAL SECTION
SCALE: 1" = 1'-0"

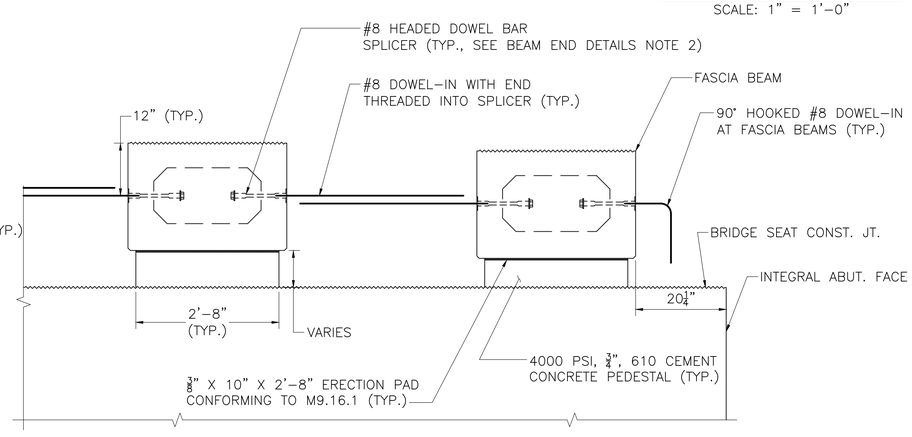

BEAM END DETAILS
SCALE: 3/4" = 1'-0"

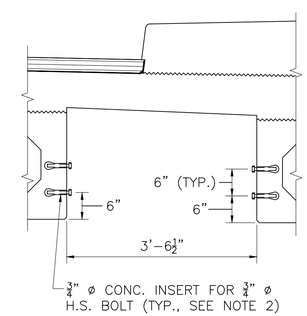

UTILITY INSERT DETAIL
SCALE: 3/4" = 1'-0"

NEWBURYPORT = WEST NEWBURY
PLUMMER SPRING ROAD

STATE	FED. AID PROJ. NO.	SHEET NO.	TOTAL SHEETS
MA	-	29	42
PROJECT FILE NO.		N/A	

FRAMING PLAN & BEAM DETAILS

FRAMING PLAN NOTES:
1. SEE STANDARD SPECIFICATIONS FOR BEAMS ERECTION AND LAYOUT.
2. THE MAIN LOAD CARRYING MEMBERS ARE B36-24 CONCRETE BOX BEAMS.

PRESTRESS NOTES:
1. ALL PRETENSIONING ELEMENTS SHALL BE 0.6" ø, UNCOATED, SEVEN-WIRE, LOW RELAXATION STEEL STRANDS AND SHALL CONFORM TO AASHTO M203.
2. THE NOMINAL TENSILE STRENGTH OF THE PRETENSIONING STRANDS SHALL BE 270 KSI.
3. THE INITIAL TENSION PER 0.6" ø STRAND SHALL BE 44 KIPS.
4. THE MINIMUM 28 DAY COMPRESSIVE STRENGTH SHALL BE 6500 PSI.
5. NO PRESTRESS SHALL BE TRANSFERRED TO THE CONCRETE UNTIL IT HAS ATTAINED A COMPRESSIVE STRENGTH, AS SHOWN BY CYLINDER TEST, OF AT LEAST 4500 PSI.
6. THE TOP OF ALL BEAMS SHALL BE GIVEN A RAKE FINISH (¼" AMPLITUDE) ACROSS THE WIDTH (PERPENDICULAR TO THE BEAM'S AXIS).
7. THE FABRICATOR IS FULLY RESPONSIBLE FOR THE DESIGN OF THE LIFTING DEVICES WHICH SHALL BE ADEQUATE FOR THE SAFETY FACTORS REQUIRED BY THE ERECTION PROCEDURE.
8. + DENOTES STRAIGHT STRANDS. (16 PRESTRESSED STRANDS)
9. 1" ø DRAIN, PLACED AT BOTH ENDS OF EACH VOID.

BEAM END DETAILS NOTES:
1. THE LATERAL STABILITY OF THE BEAMS SHALL BE THE RESPONSIBILITY OF THE CONTRACTOR DURING ERECTION AND CONSTRUCTION. A LATERAL SUPPORT SYSTEM SHALL BE DESIGNED BY THE CONTRACTOR IN ACCORDANCE WITH THE AASHTO LRFD BRIDGE DESIGN AND BRIDGE CONSTRUCTION SPECIFICATIONS.
2. #8 HEADED DOWEL BAR SPLICERS SHALL BE CAST-IN-PLACE IN THE PRECAST BEAMS BY THE FABRICATOR AND SHALL BE EMBEDDED AS REQUIRED TO PROVIDE A MINIMUM NOMINAL TENSILE RESISTANCE OF 71.0 KIPS AS SPECIFIED BY THE MANUFACTURER.

UTILITY INSERT DETAIL NOTES:
1. ¾" DIAMETER THREADED INSERTS FOR ¾" H.S. BOLTS SHALL BE CAST INTO THE PRECAST BEAMS BY THE FABRICATOR AND SHALL PROVIDE A MINIMUM NOMINAL TENSILE RESISTANCE OF 6.0 KIPS AND A MINIMUM NOMINAL SHEAR RESISTANCE OF 6.0 KIPS IN 3000 PSI CONCRETE.
2. INSERTS SHALL BE POSITIONED TO AVOID INTERFERENCE WITH PRESTRESSING STRANDS.

COMMONWEALTH OF MASSACHUSETTS
MassDOT, Highway Division
APPROVED UNDER PROVISIONS OF MASS. GEN. LAWS CH 85 S 35

STATE BRIDGE ENGINEER — 3/17/2023 DATE

MONTH DD, YYYY	ISSUED FOR CONSTRUCTION
DATE	DESCRIPTION
USE ONLY PRINTS OF LATEST DATE	

2839500_BR6 8-16(N11007_W20001).DWG Plotted on 15-Mar-2023 10:26 AM
CHAPTER 85 REVIEW 06-24-2021

NEWBURYPORT = WEST NEWBURY
PLUMMER SPRING ROAD

STATE	FED. AID PROJ. NO.	SHEET NO.	TOTAL SHEETS
MA	-	30	42
PROJECT FILE NO.		N/A	

TRANSVERSE SECTION & DECK DETAILS

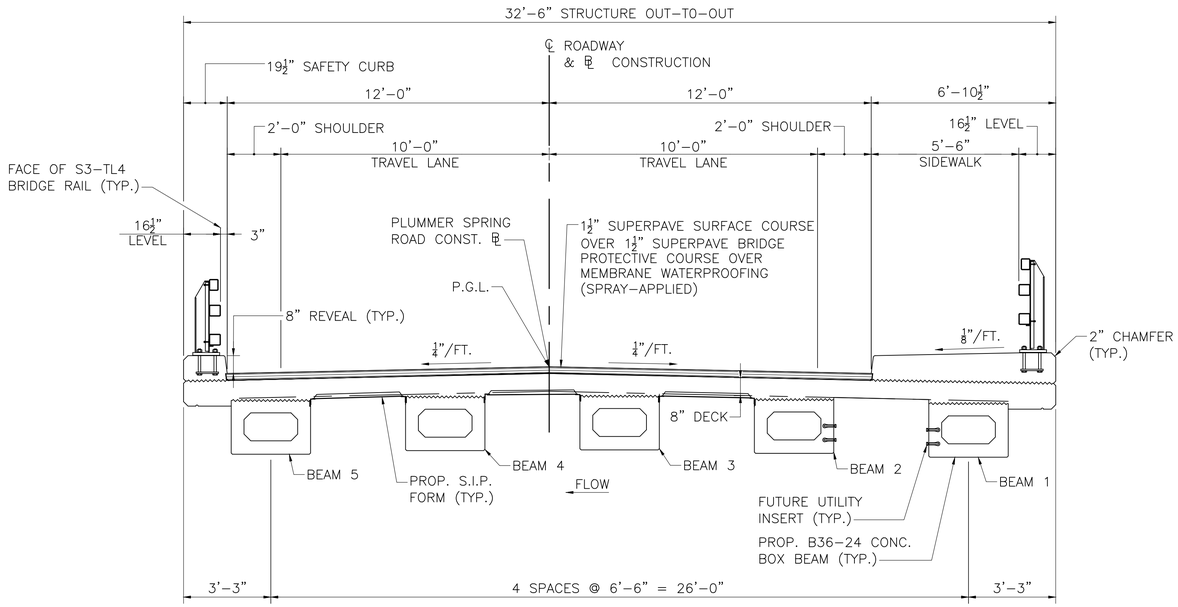

PROPOSED TRANSVERSE SECTION

SCALE: 3/8" = 1'-0"

DECK NOTES:

1. ROADWAY DECK SLAB SHALL BE 4000 PSI, ¾ INCH, 585 HP CEMENT CONCRETE.
2. LONGITUDINAL REINFORCEMENT SHALL BE PLACED PARALLEL TO THE ℄ OF CONSTRUCTION. TRANSVERSE (PRIMARY) REINFORCEMENT SHALL BE PLACED PERPENDICULAR TO THE ℄ OF CONSTRUCTION.
3. ALL REINFORCEMENT AND SUPPORT DEVICES SHALL BE COATED.
4. THE FINISHED SURFACE OF THE BRIDGE DECK SHALL BE SMOOTH AND WITHOUT ANY PROJECTIONS THAT COULD PUNCTURE THE MEMBRANE WATERPROOFING OR DEPRESSIONS THAT COULD RETAIN WATER.

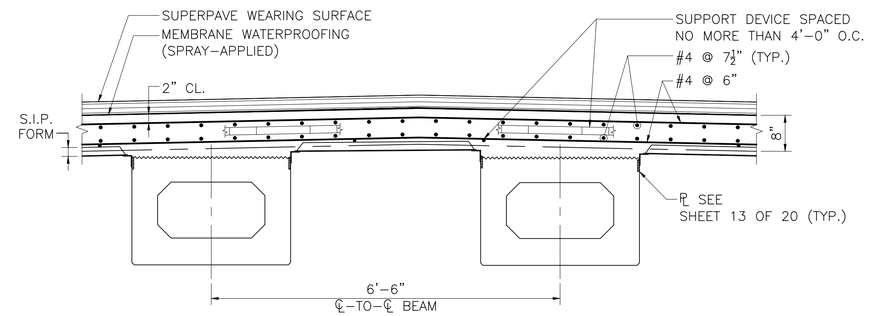

TYPICAL DECK REINFORCEMENT

SCALE: 3/4" = 1'-0"

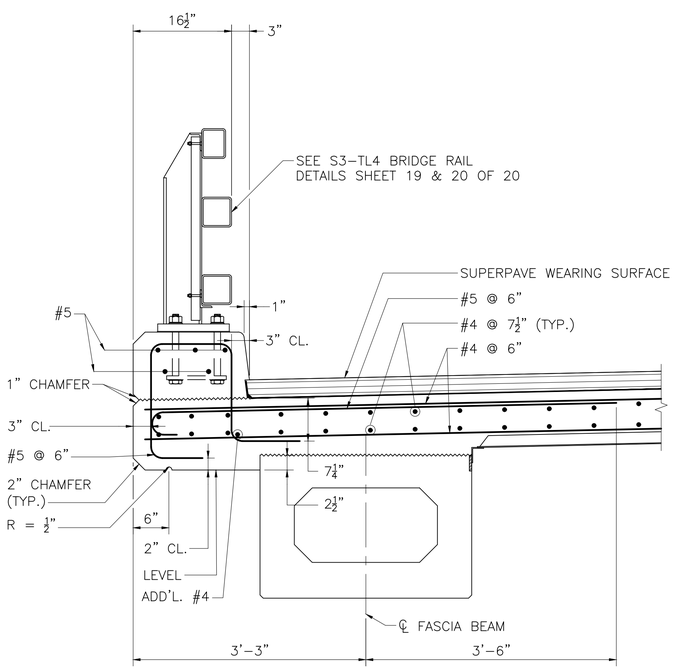

SECTION THRU SAFETY CURB

SCALE: 1" = 1'-0"

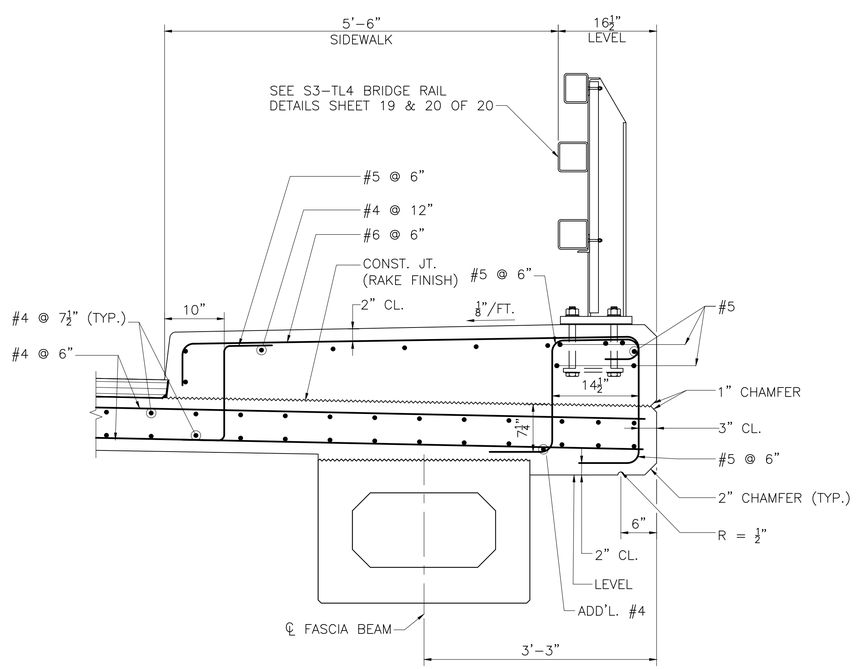

SECTION THRU SIDEWALK

SCALE: 1" = 1'-0"

COMMONWEALTH OF MASSACHUSETTS
MassDOT, Highway Division
APPROVED UNDER PROVISIONS OF
MASS. GEN. LAWS CH 85 S 35

STATE BRIDGE ENGINEER — DATE 3/17/2023

DATE	DESCRIPTION
MONTH DD, YYYY	ISSUED FOR CONSTRUCTION
USE ONLY PRINTS OF LATEST DATE	

2839500_BR6 8-16(N11007_W20001).DWG Plotted on 15-Mar-2023 10:26 AM
CHAPTER 85 REVIEW 06-24-2021

STATE	FED. AID PROJ. NO.	SHEET NO.	TOTAL SHEETS
MA	-	31	42
PROJECT FILE NO.		N/A	

DECK DETAILS

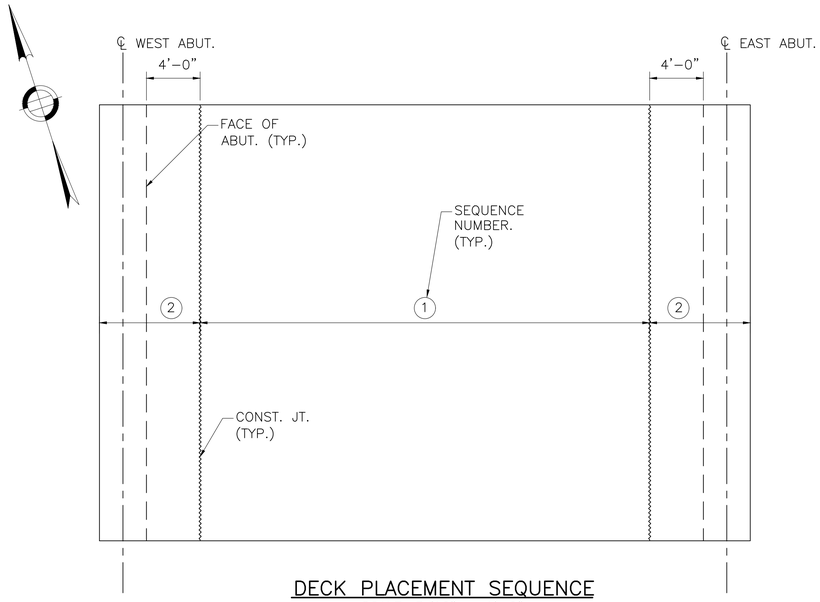

DECK PLACEMENT SEQUENCE
SCALE: 3/16" = 1'–0"

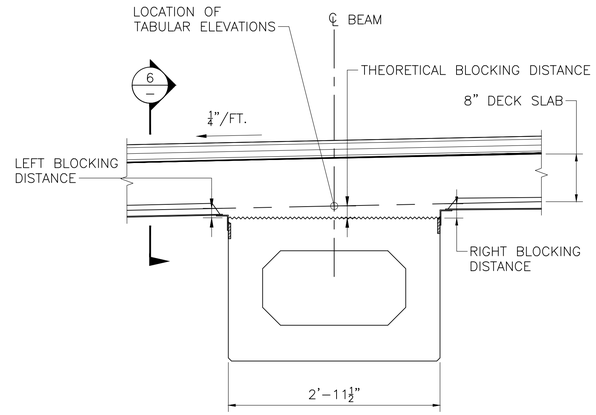

NOTES:
1. THE RIGHT AND LEFT ORIENTATION IS TAKEN LOOKING UPSTATION ALONG THE BEAM.
2. RIGHT BLOCKING DISTANCE = THEORETICAL BLOCKING DISTANCE + 0.375".
   LEFT BLOCKING DISTANCE = THEORETICAL BLOCKING DISTANCE – 0.375".

HAUNCH DETAIL
SCALE: 1" = 1'–0"

STAY–IN–PLACE FORM NOTES:
1. FOR 2" S.I.P. FORM, SET BOTTOM OF FORM 1" BELOW ELEVATION GIVEN IN TABLE. FOR 3" S.I.P. FORM, SET BOTTOM OF FORM 1 1/2" BELOW TABLE ELEVATIONS.
2. FORM ENDS SHALL BE CRIMPED CLOSED IN A TAPERED MANNER. SEPARATE END CLOSURE PIECES WILL NOT BE ALLOWED.
3. SUPPORT ANGLES SHALL BE PLACED IN THE "LEG DOWN" POSITION WHERE POSSIBLE. WHERE "LEG UP" POSITION IS NECESSARY, THE UPPER MOST PORTION OF THE ANGLE SHALL NOT PROJECT MORE THAN 1" ABOVE THE TOP FLANGE. THE CONTRACTOR SHALL HAVE AN ASSORTMENT OF ANGLES OF VARIOUS SIZES AVAILABLE ON THE SITE TO CONFORM TO THIS REQUIREMENT.
4. ALL MAIN STEEL REINFORCEMENT IN THE LOWER MAT SHALL BE CENTERED OVER THE VALLEY OF THE S.I.P. FORM.
5. THE CONTRACTOR SHALL DESIGN AND DETAIL ALL ELEMENTS OF THE FORMING SYSTEM AND SHALL SUBMIT TO THE ENGINEER FOR APPROVAL.
6. IN CASES WHERE STANDARD 2" OR 3" DEEP S.I.P. FORMS DO NOT SATISFY DESIGN REQUIREMENTS AN ALTERNATIVE FORMING SYSTEM CONSISTING OF DEEPER S.I.P. FORMS OR REMOVABLE FORMS SHALL BE DESIGNED AND DETAILED BY THE CONTRACTOR AND SUBMITTED TO THE ENGINEER FOR APPROVAL. THE DESIGN THICKNESS OF THE SLAB SHALL NOT BE REDUCED.

STAY–IN–PLACE FORM ATTACHMENT NOTES:
1. EMBEDDED ATTACHMENT PLATES SHALL BE HOT–DIPPED GALVANIZED AASHTO M270 GRADE 36 STEEL. THE PLATES SHALL BE IN LENGTHS FROM 3' TO 12' WITH PIECES BUTTED TOGETHER WITHOUT END CONNECTIONS FOR FULL LENGTH OF BEAM. THE HEADED ANCHORS SHALL BE ATTACHED TO THE PLATES PRIOR TO GALVANIZING.
2. HEADED ANCHORS SHALL CONFORM TO M8.04.1 FOR MATERIAL REQUIREMENTS ONLY.
3. THE CONTRACTOR SHALL BE RESPONSIBLE FOR THE DESIGN OF THE S.I.P. FORM SEAT AND WELD.
4. THE CONTRACTOR SHALL BE RESPONSIBLE FOR REMOVING THE CONCRETE LAITANCE FROM THE ATTACHMENT PLATE BEFORE INSTALLING THE S.I.P. FORMS.

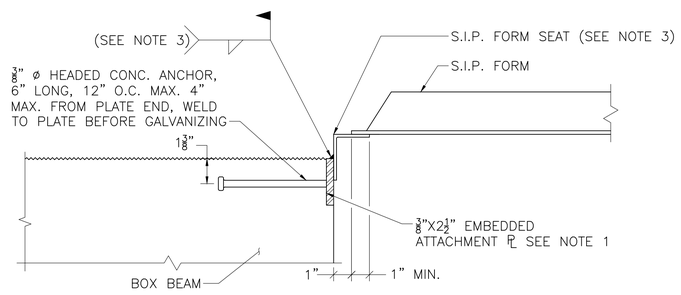

STAY–IN–PLACE FORM ATTACHMENT DETAIL
SCALE: 3" = 1'–0"

BEAM NO.	TOP OF FORM ELEVATIONS FOR DECK SLAB PRIOR TO PLACEMENT OF CONCRETE				
	INCREASING STATIONS →				
	℄ BRG.	1/4 PT.	1/2 PT.	3/4 PT.	℄ BRG.
1	18.32	18.41	18.48	18.53	18.56
2	18.46	18.54	18.61	18.66	18.69
3	18.59	18.67	18.74	18.79	18.83
4	18.56	18.65	18.72	18.77	18.80
5	18.43	18.51	18.58	18.63	18.67

NOTE:
AFTER THE BEAMS ARE ERECTED BUT BEFORE THE FORMS ARE BUILT, ELEVATIONS ON TOP OF THE FLANGE OF THE BEAMS ARE TO BE OBTAINED AT THE POINTS INDICATED IN THE TABLE. THE DIFFERENCE BETWEEN THE ELEVATIONS OBTAINED AND THOSE SHOWN IN THE TABLE GIVES THE THEORETICAL BLOCKING DISTANCE FROM THE TOP OF BEAM TO THE BOTTOM OF THE SLAB AT CENTER LINE OF BEAM.

DECK CONSTRUCTION JOINT NOTES:
1. BRIDGE DECK SLAB SHALL BE PLACED IN ACCORDANCE WITH THE PLACEMENT SEQUENCE SHOWN ON THE PLANS.
2. THE SURFACE OF THE PREVIOUSLY CAST CONCRETE SHALL BE BLAST CLEANED, ROUGHENED, WETTED WITH CLEAN WATER, AND THEN FLUSHED WITH A MORTAR COMPOSED OF EQUAL PARTS OF THE CEMENT AND SAND SPECIFIED FOR THE NEW CONCRETE, BEFORE NEW CONCRETE IS PLACED ADJACENT THERETO. NEW CONCRETE SHALL BE PLACED BEFORE MORTAR HAS TAKEN INITIAL SET.
3. IN LIEU OF THE MORTAR, AN EPOXY ADHESIVE SUITABLE FOR BONDING FRESH CONCRETE TO HARDENED CONCRETE FOR LOAD BEARING APPLICATIONS MAY BE USED. THE EPOXY ADHESIVE SHALL CONFORM TO AASHTO M 235 TYPE V AND SHALL BE APPLIED IN ACCORDANCE WITH THE MANUFACTURER'S RECOMMENDATIONS.
4. DOWEL BAR SPLICERS SHALL BE USED WHERE USE OF LAP SPLICES IS NOT FEASIBLE.

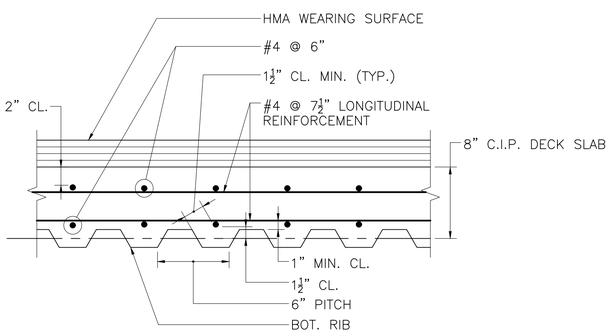

SECTION 6
NOT TO SCALE

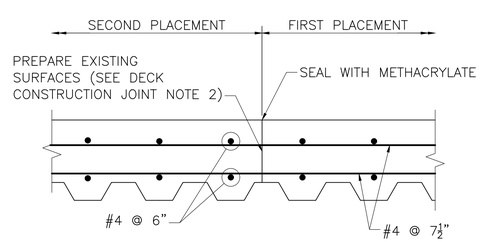

TRANSVERSE CONSTRUCTION JOINT DETAIL IN DECK SLAB
NOT TO SCALE

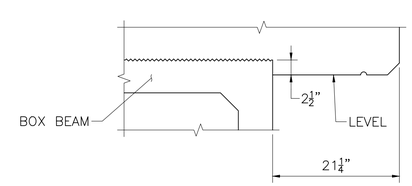

SLAB OVERHANG AT FASCIA BEAM
SCALE: 1" = 1'–0"

COMMONWEALTH OF MASSACHUSETTS
MassDOT, Highway Division
APPROVED UNDER PROVISIONS OF MASS. GEN. LAWS CH 85 S 35

STATE BRIDGE ENGINEER — DATE 3/17/2023

MONTH DD, YYYY	ISSUED FOR CONSTRUCTION
DATE	DESCRIPTION
USE ONLY PRINTS OF LATEST DATE	

2839500_BR6 8-16(N11007_W20001).DWG Plotted on 15-Mar-2023 10:26 AM
CHAPTER 85 REVIEW 06-24-2021

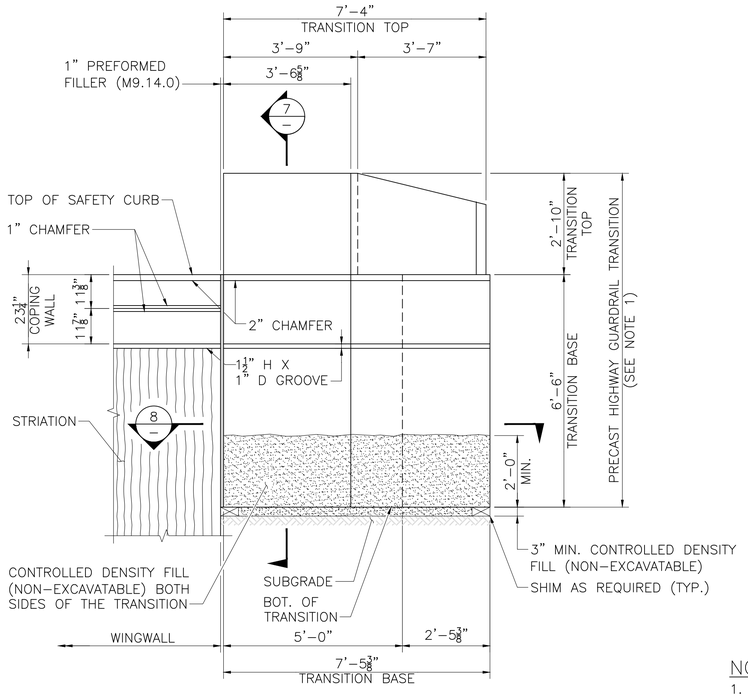

SAFETY CURB

PRECAST GUARDRAIL TRANSITION ELEVATION AT U-WINGWALL

SCALE: 1/2" = 1'-0"

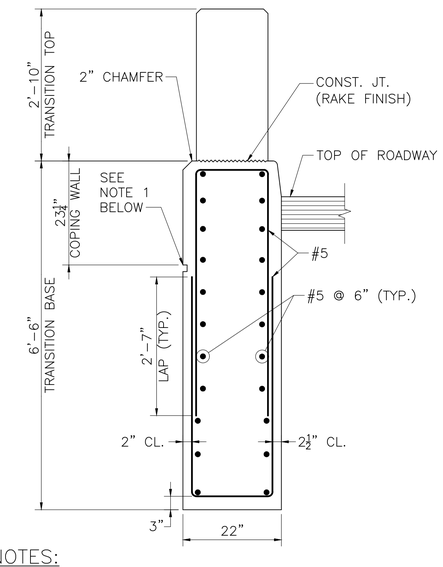

NOTES:

1. 1 1/2" H X 1" D GROOVE. ALIGN WITH GROOVE AT TOP OF STRIATIONS.
2. REINFORCEMENT OF THE TRANSITION TOP IS NOT SHOWN FOR CLARITY.

SECTION 7

SCALE: 3/4" = 1'-0"

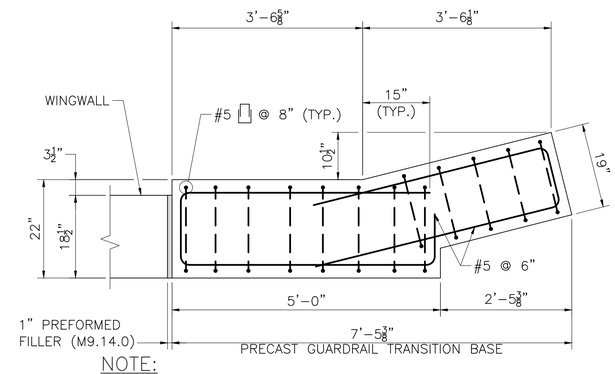

NOTE:

WINGWALL REINFORCEMENT AND STRIATIONS NOT SHOWN FOR CLARITY.

SECTION 8

SCALE: 3/4" = 1'-0"

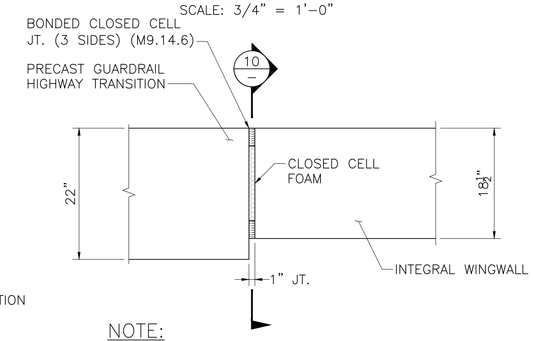

NOTE:

REINFORCEMENT NOT SHOWN FOR CLARITY.

SECTION 9

SCALE: 1" = 1'-0"

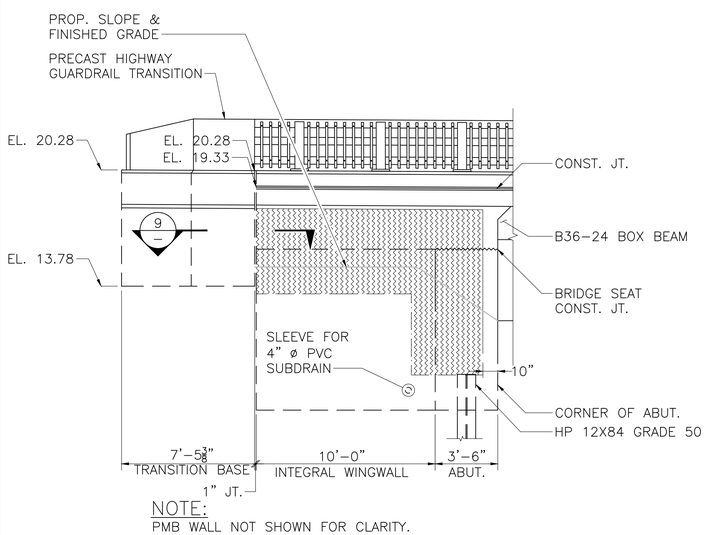

NOTE:

PMB WALL NOT SHOWN FOR CLARITY.

NORTHEAST GUARDRAIL ELEVATION

SCALE: 1/4" = 1'-0"

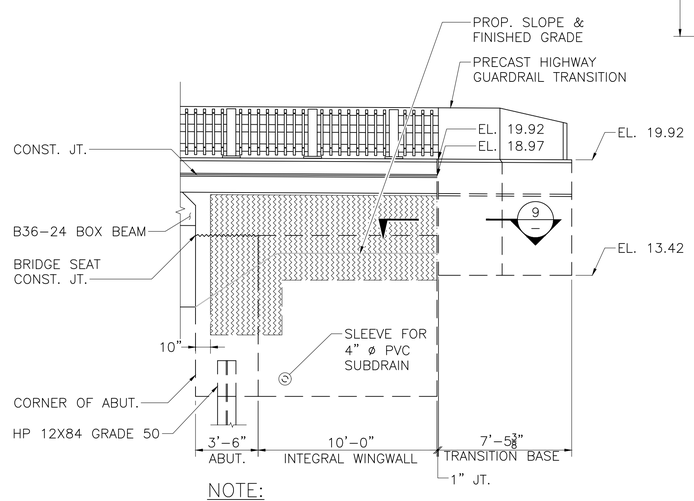

NOTE:

PMB WALL NOT SHOWN FOR CLARITY.

NORTHWEST GUARDRAIL ELEVATION

SCALE: 1/4" = 1'-0"

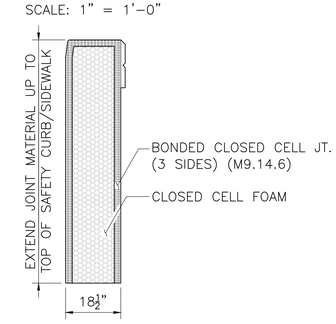

SECTION 10

SCALE: 1/2" = 1'-0"

NEWBURYPORT = WEST NEWBURY
PLUMMER SPRING ROAD

STATE	FED. AID PROJ. NO.	SHEET NO.	TOTAL SHEETS
MA	-	32	42
PROJECT FILE NO.		N/A	

PRECAST HIGHWAY GUARDRAIL TRANSITION BASE DETAIL AT SAFETY CURB

NOTES:

1. PRECAST GUARDRAIL TRANSITION SHALL BE 5000 PSI, 3/4 INCH, 685 HP CEMENT CONCRETE.
2. GRAVEL BORROW SHALL BE PLACED AND THOROUGHLY COMPACTED TO THE GRADE OF 3" MINIMUM BELOW THE INTENDED BOTTOM OF THE PRECAST GUARDRAIL TRANSITION BASE AND TO A HEIGHT OF 2'-0" MINIMUM ON ALL SIDES OF THE TRANSITION BASE TO FORM A TRENCH IN WHICH TO SET THE TRANSITION. WHERE NO GRAVEL BORROW IS REQUIRED BELOW THE BASE, IT SHALL BE PLACED ON UNDISTURBED SOIL.
3. CONTRACTOR SHALL SET THE PRECAST GUARDRAIL TRANSITION TO THE REQUIRED ELEVATION AND ALIGNMENT, AND BACKFILL PRECAST GUARDRAIL TRANSITION WITH CONTROLLED DENSITY FILL (NON-EXCAVATABLE) TO THE ELEVATION SHOWN.
4. THE REST OF THE REINFORCEMENT IS NOT SHOWN FOR CLARITY.
5. PMB WALLS NOT SHOWN FOR CLARITY.

COMMONWEALTH OF MASSACHUSETTS
MassDOT, Highway Division
APPROVED UNDER PROVISIONS OF MASS. GEN. LAWS CH 85 S 35

STATE BRIDGE ENGINEER — DATE 3/17/2023

MONTH DD, YYYY	ISSUED FOR CONSTRUCTION
DATE	DESCRIPTION
USE ONLY PRINTS OF LATEST DATE	

2839500_BR6 8-16(N11007_W20001).DWG Plotted on 15-Mar-2023 10:26 AM
CHAPTER 85 REVIEW 06-24-2021

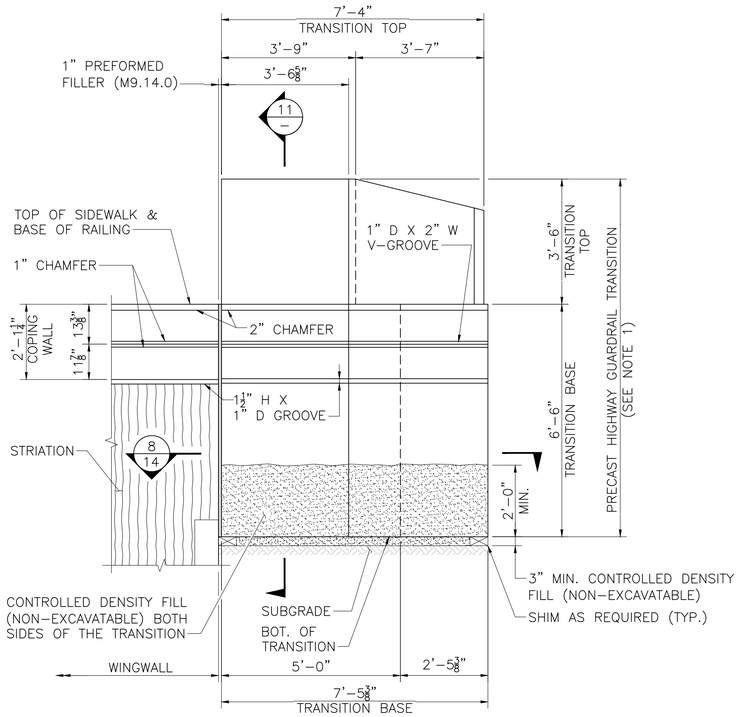

SIDEWALK

PRECAST GUARDRAIL TRANSITION ELEVATION AT U-WINGWALL

SCALE: 1/2" = 1'-0"

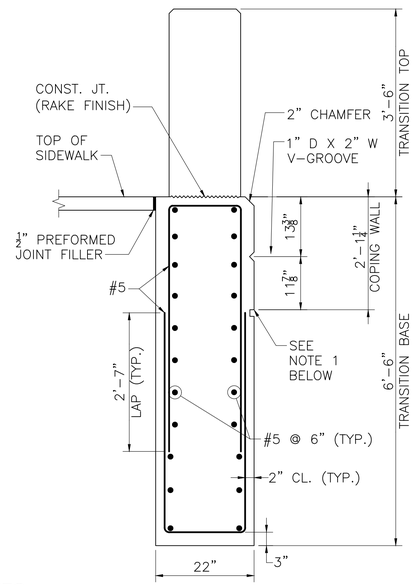

NOTES:

1. 1 1/2" H X 1" D GROOVE. ALIGN WITH GROOVE AT TOP OF STRIATIONS.
2. REINFORCEMENT OF THE TRANSITION TOP IS NOT SHOWN FOR CLARITY.

SECTION 11

SCALE: 3/4" = 1'-0"

NEWBURYPORT = WEST NEWBURY
PLUMMER SPRING ROAD

STATE	FED. AID PROJ. NO.	SHEET NO.	TOTAL SHEETS
MA	-	33	42
PROJECT FILE NO.		N/A	

PRECAST HIGHWAY GUARDRAIL TRANSITION BASE DETAIL AT SIDEWALK

NOTES:

1. PRECAST GUARDRAIL TRANSITION SHALL BE 5000 PSI, 3/4 INCH, 685 HP CEMENT CONCRETE.
2. GRAVEL BORROW SHALL BE PLACED AND THOROUGHLY COMPACTED TO THE GRADE OF 3" MINIMUM BELOW THE INTENDED BOTTOM OF THE PRECAST GUARDRAIL TRANSITION BASE AND TO A HEIGHT OF 2'-0" MINIMUM ON ALL SIDES OF THE TRANSITION BASE TO FORM A TRENCH IN WHICH TO SET THE TRANSITION. WHERE NO GRAVEL BORROW IS REQUIRED BELOW THE BASE, IT SHALL BE PLACED ON UNDISTURBED SOIL.
3. CONTRACTOR SHALL SET THE PRECAST GUARDRAIL TRANSITION TO THE REQUIRED ELEVATION AND ALIGNMENT, AND BACKFILL PRECAST GUARDRAIL TRANSITION WITH CONTROLLED DENSITY FILL (NON-EXCAVATABLE) TO THE ELEVATION SHOWN.
4. THE REST OF THE REINFORCEMENT IS NOT SHOWN FOR CLARITY.
5. PMB WALLS NOT SHOWN FOR CLARITY.

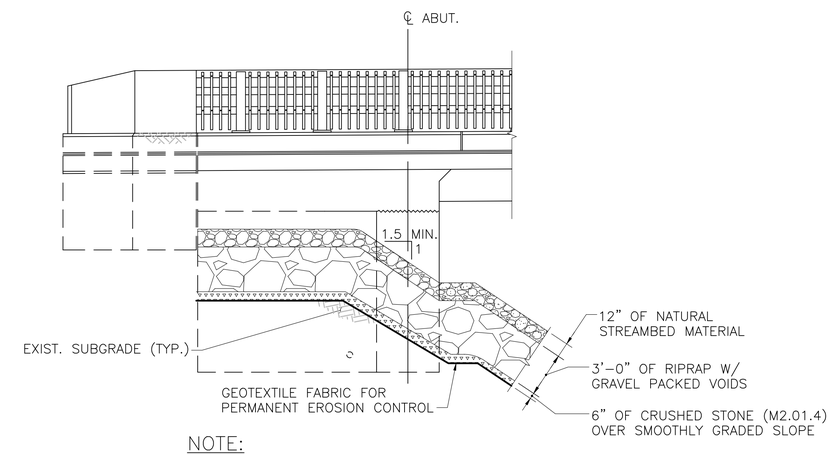

NOTE:
STRIATIONS & PMB WALL NOT SHOWN FOR CLARITY.

SLOPE DETAIL

SCALE: 1/4" = 1"-0"

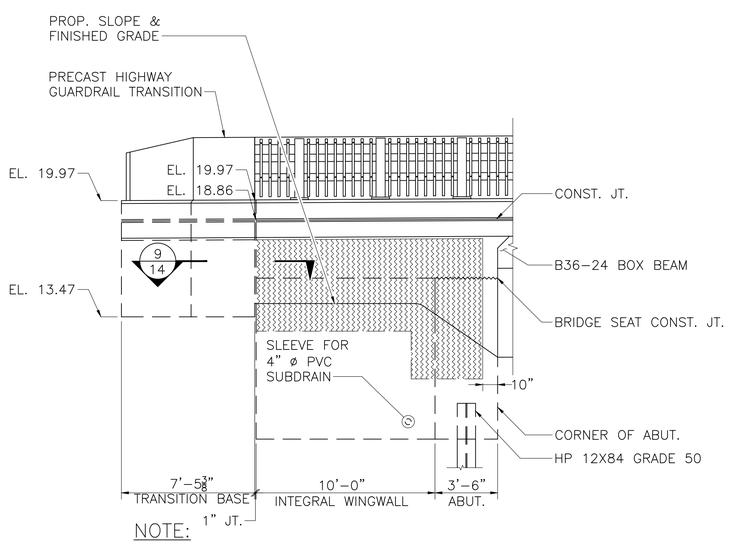

NOTE:
PMB WALL NOT SHOWN FOR CLARITY.

SOUTHWEST GUARDRAIL ELEVATION

SCALE: 1/4" = 1'-0"

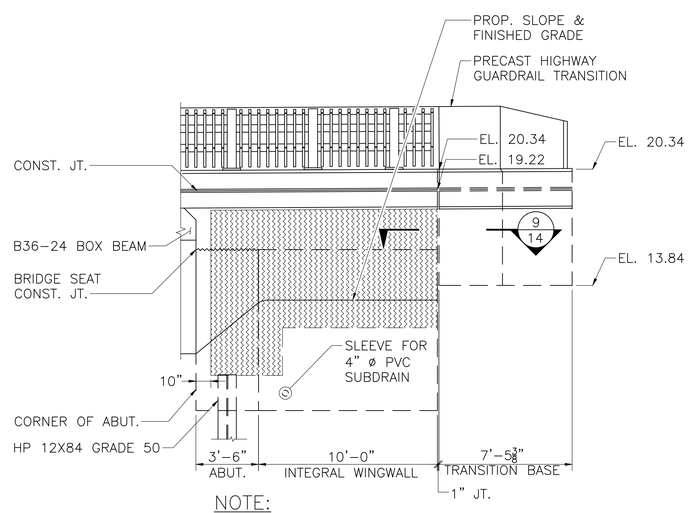

NOTE:
PMB WALL NOT SHOWN FOR CLARITY.

SOUTHEAST GUARDRAIL ELEVATION

SCALE: 1/4" = 1'-0"

COMMONWEALTH OF MASSACHUSETTS
MassDOT, Highway Division
APPROVED UNDER PROVISIONS OF MASS. GEN. LAWS CH 85 S 35

STATE BRIDGE ENGINEER — DATE 3/17/2023

MONTH DD, YYYY	ISSUED FOR CONSTRUCTION
DATE	DESCRIPTION
USE ONLY PRINTS OF LATEST DATE	

2839500_BR6 8-16(N11007_W20001).DWG Plotted on 15-Mar-2023 10:26 AM
CHAPTER 85 REVIEW 06-24-2021
Drawing name: \\Vhb\proj\Projects-MA\32630\Structural\Drawings\Proposed\32630_BR6 8-16(N11007_W20001).dwg
Plotted on Wednesday, MAR 15, 2023 - 10:25am by MBRIDGER

STATE	FED. AID PROJ. NO.	SHEET NO.	TOTAL SHEETS
MA	-	34	42
PROJECT FILE NO.		N/A	

APPROACH SLAB & MISC DETAILS

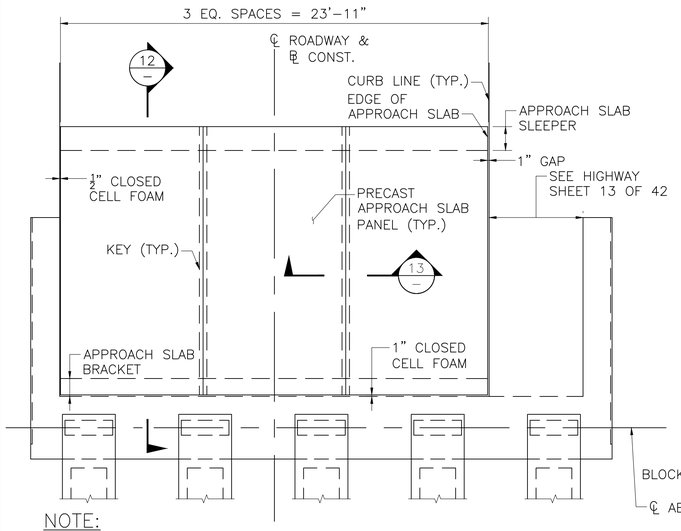

NOTE:
1. DRAWINGS DEPICT 3 PRECAST APPROACH SLAB PANELS. TO ACCOMMODATE CROSS SLOPE OF APPROACH SLAB BRACKET 4 PRECAST APPROACH SLAB UNITS MAY BE REQUIRED.

APPROACH SLAB PLAN
SCALE: 1/4" = 1'-0"

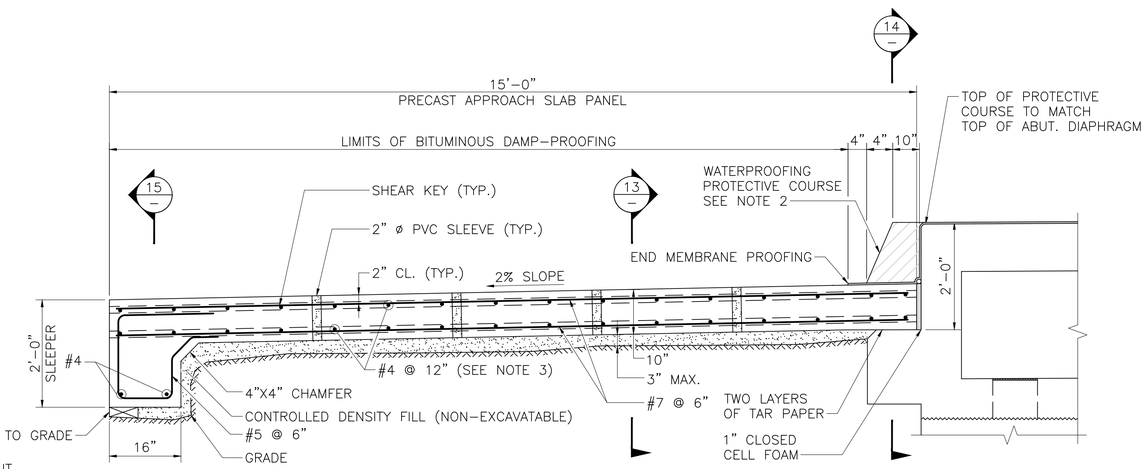

SECTION 12 TYPE II APPROACH SLAB
SCALE: 3/4" = 1'-0"

APPROACH SLAB NOTES:
1. PRECAST APPROACH SLAB PANEL TO BE 4000 PSI, 1.5 INCH, 565 CEMENT CONCRETE. SUBSTITUTIONS WILL NOT BE PERMITTED.
2. PROTECTIVE COURSE TO BE SUPERPAVE BRIDGE PROTECTIVE COURSE – 9.5(SPC-B-9.5), PLACED IN 2 INCH LAYERS AND COMPACTED WITH A MECHANICAL HAND-GUIDED TAMPER WITHIN 12 HOURS AFTER PLACING MEMBRANE WATERPROOFING.
3. PLACE LONGITUDINAL REINFORCEMENT PARALLEL TO THE ℄ OF THE BRIDGE. PLACE TRANSVERSE REINFORCEMENT PARALLEL TO THE ABUTMENT.
4. PVC SLEEVES TO BE INCLUDED IN PRECAST APPROACH SLAB TO FACILITATE PLACEMENT OF CONTROLLED DENSITY FILL (NON-EXCAVATABLE).

PARAFFIN JOINT NOTES:
1. ALL CONCRETE ABOVE SLAB SHALL BE POURED IN ALTERNATING SECTIONS WITH NOT LESS THAN 3 DAYS BETWEEN POURS.
2. DO NOT CARRY LONGITUDINAL BARS THROUGH THE PARAFFIN JOINTS. END THE REINFORCEMENT 2" CLEAR OF JOINT.
3. JOINT SHALL BE SQUARE TO FACE OF CURB.
4. FOR JOINT LOCATIONS SEE SHEET 6 OF 20.

FACE OF CURB NOTES:
1. TURN MEMBRANE UP INTO 3" HIGH POCKET.
2. DIMENSIONS AT THE FACE OF SIDEWALK ARE THE SAME FOR SAFETY CURB.

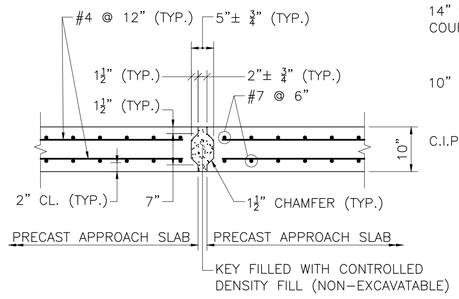

SECTION 13
SCALE: 3/4" = 1'-0"

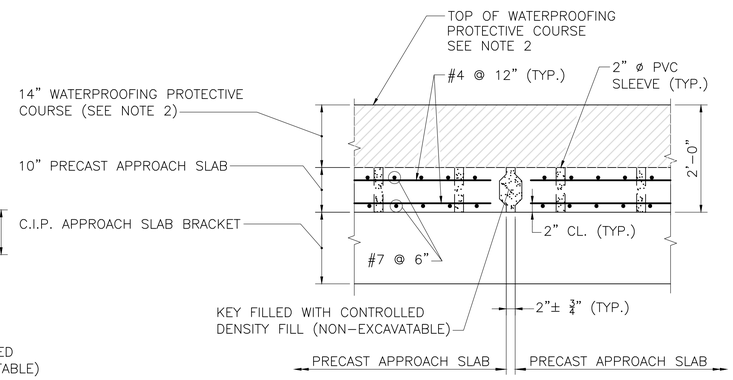

SECTION 14
SCALE: 3/4" = 1'-0"

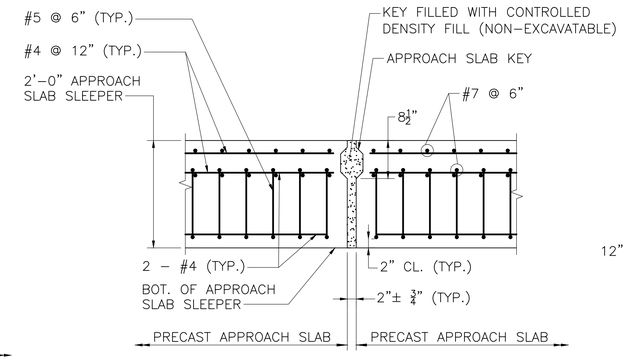

SECTION 15
SCALE: 3/4" = 1'-0"

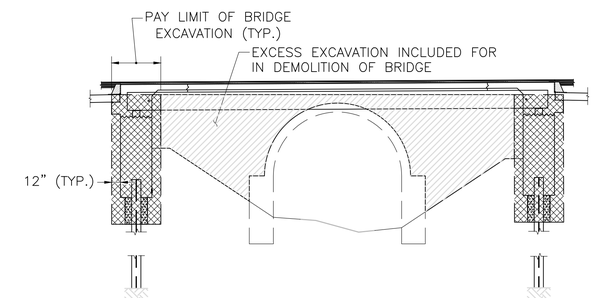

PAY LIMITS FOR BRIDGE EXCAVATION
SCALE: 1/8" = 1'-0"

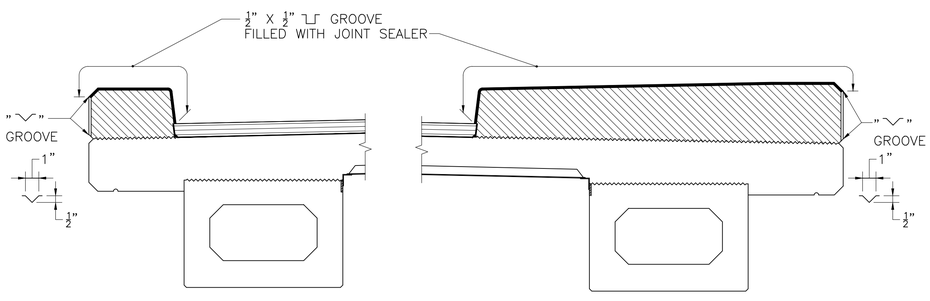

SAFETY CURB

SIDEWALK

PARAFFIN JOINT DETAIL
SCALE: 3/4" = 1'-0"

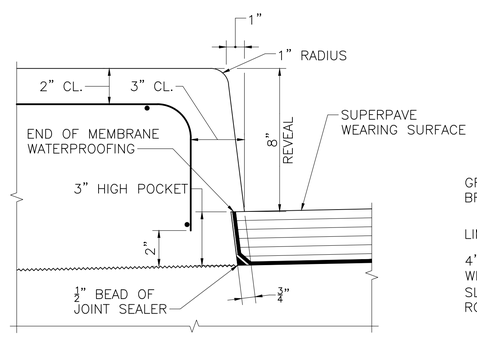

FACE OF CURB DETAILS
SCALE: 3" = 1'-0"

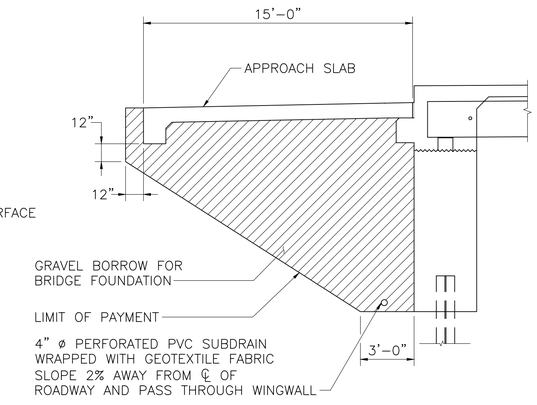

INTEGRAL ABUTMENT BACKFILL
SCALE: 1/4" = 1'-0"

COMMONWEALTH OF MASSACHUSETTS
MassDOT, Highway Division
APPROVED UNDER PROVISIONS OF MASS. GEN. LAWS CH 85 S 35

STATE BRIDGE ENGINEER — DATE 3/17/2023

DATE	DESCRIPTION
MONTH DD, YYYY	ISSUED FOR CONSTRUCTION
USE ONLY PRINTS OF LATEST DATE	

2839500_BR6 8-16(N11007_W20001).DWG Plotted on 15-Mar-2023 10:26 AM
CHAPTER 85 REVIEW 06-24-2021

NEWBURYPORT = WEST NEWBURY
PLUMMER SPRING ROAD

STATE	FED. AID PROJ. NO.	SHEET NO.	TOTAL SHEETS
MA	-	35	42
PROJECT FILE NO.		N/A	

HIGHWAY GUARDRAIL
TRANSITION S3-TL4 (1 OF 2)

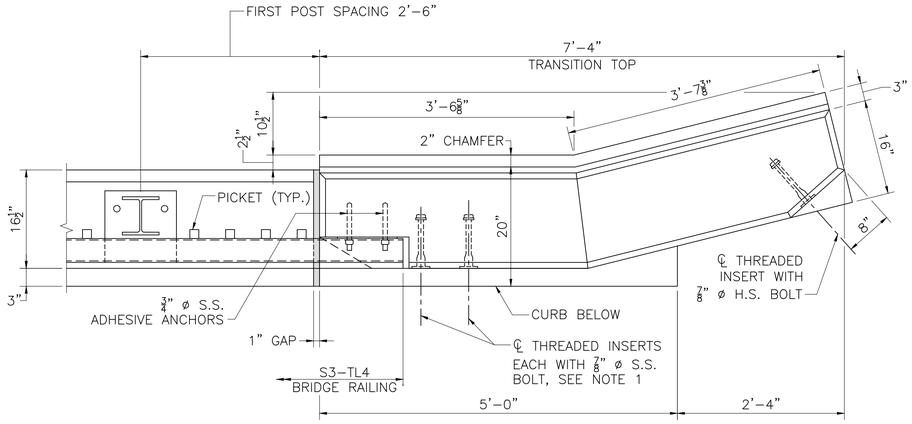

PLAN AT SAFETY CURB/SIDEWALK
SCALE: 1" = 1'-0"

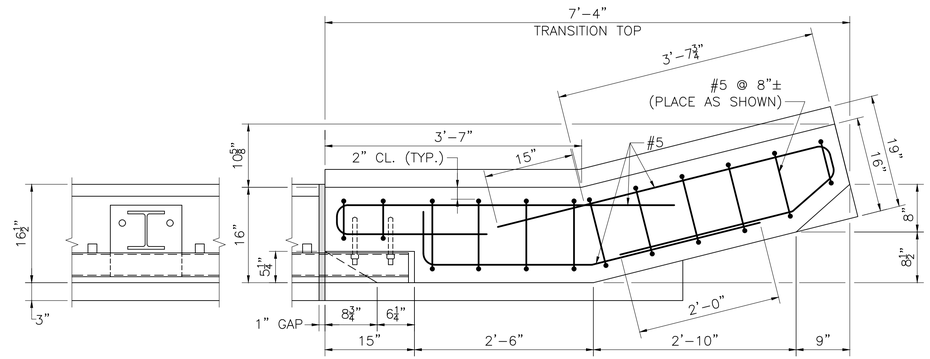

SECTION 16
SCALE: 1" = 1'-0"

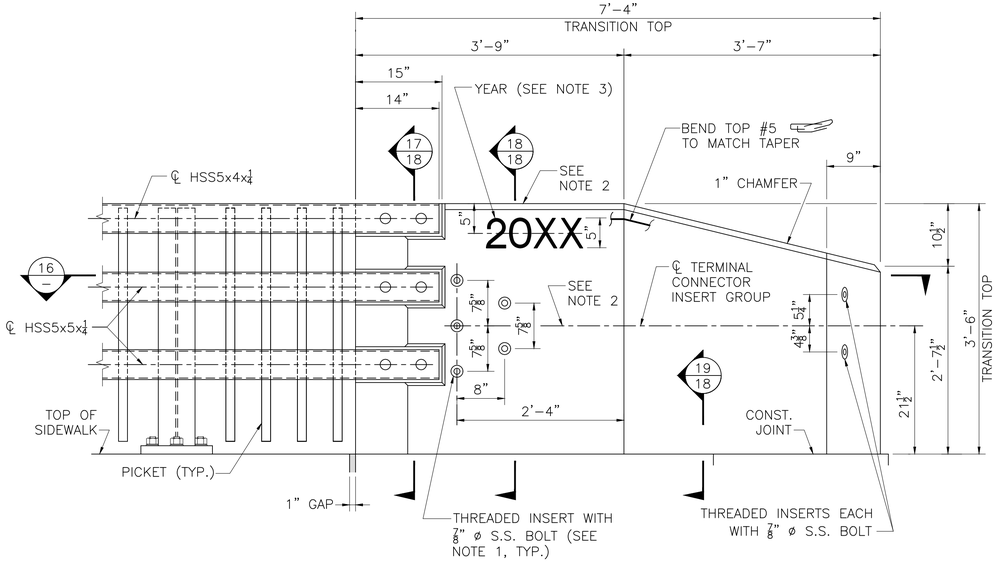

ELEVATION AT SIDEWALK
SCALE: 1" = 1'-0"

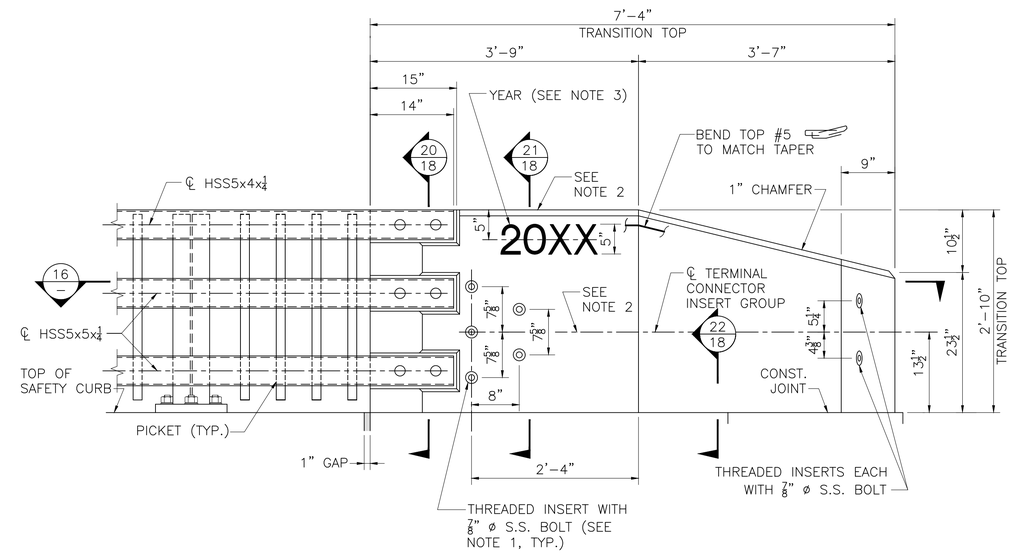

ELEVATION AT SAFETY CURB
SCALE: 1" = 1'-0"

NOTES:

1. THREADED INSERTS SHALL BE PREQUALIFIED BY THE MANUFACTURER AS BEING CAPABLE OF DEVELOPING A NOMINAL SHEAR RESISTANCE OF 20 KIPS PER 7/8" ø S.S. BOLT. S.S. BOLTS SHALL BE 7/8" ø x 1 1/2" LONG FULLY THREADED AISI TYPE 304N STAINLESS STEEL. INSERTS FOR 7/8" S.S. BOLTS SHALL BE GALVANIZED AND CAST INTO THE TRANSITION.

2. FOR AN APPROACH GRADE UP TO 3%, THE TRANSITION MAY BE CAST SQUARE AND SET PLUMB WITH THE MINIMUM EMBEDMENT DEPTH SHOWN. THE TERMINAL CONNECTOR INSERT GROUP SHALL BE SQUARE TO THE POST.

   FOR AN APPROACH GRADE IN EXCESS OF 3%, THE TRANSITION TOP AND THE TOP OF CURB SHALL FOLLOW THE APPROACH GRADE. THE HEIGHT OF THE TRANSITION TOP SHALL VARY PROVIDED THAT THE MINIMUM DIMENSIONS SHOWN ON THE CONSTRUCTION DRAWINGS ARE MET. THE BOTTOM OF THE TRANSITION BASE SHALL BE SET LEVEL WITH THE MINIMUM EMBEDMENT DEPTH SHOWN. THE TERMINAL CONNECTOR INSERT GROUP SHALL BE SLOPED TO FOLLOW THE APPROACH GRADE.

3. USE LATEST CONTRACT COMPLETION YEAR IN EFFECT WHEN THE FIRST GUARDRAIL TRANSITION IS CAST. SEE GENERAL NOTES FOR LOCATION WHERE DATE IS TO BE PLACED.

4. ALL CONCRETE FOR THE PRECAST HIGHWAY GUARDRAIL TRANSITION SHALL BE 5000 PSI, 3/4", 685 HP CEMENT CONCRETE.

5. LIFTING DEVICES (NOT SHOWN), INCLUDING THEIR NUMBER AND LOCATION, SHALL BE DESIGNED AND DETAILED BY THE PRECASTER. THEY SHALL BE GALVANIZED AND SHALL BE PLACED AND RECESSED IN POCKETS TO PROVIDE 1 1/2" CLEAR COVER TO THE FACE OF THE TRANSITION CONCRETE. THESE DEVICES SHALL BE CLEARLY SHOWN ON THE SHOP DRAWINGS ALONG WITH ALL SUPPORTING CALCULATIONS AND/OR CATALOG CUTS. ONCE THE PRECAST TRANSITION IS SET IN PLACE, THE LIFTING DEVICE POCKETS SHALL BE FILLED WITH A NON-SHRINK GROUT THAT MATCHES THE COLOR OF THE TRANSITION CONCRETE WHEN CURED AND THE FILLED POCKETS SHALL BE RUBBED WITH A CORUNDUM STONE TO BLEND OUT THE JOINTS.

COMMONWEALTH OF MASSACHUSETTS
MassDOT, Highway Division
APPROVED UNDER PROVISIONS OF MASS. GEN. LAWS CH 85 S 35

STATE BRIDGE ENGINEER — DATE 3/17/2023

MONTH DD, YYYY	ISSUED FOR CONSTRUCTION
DATE	DESCRIPTION
USE ONLY PRINTS OF LATEST DATE	

2839500_BR17-20(N11007_W20001).DWG Plotted on 15-Mar-2023 10:26 AM
CHAPTER 85 REVIEW 06-24-2021

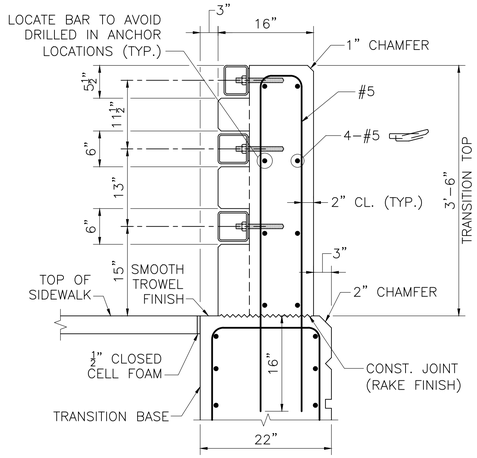

SECTION 17 AT SIDEWALK

SCALE: 1" = 1'–0"

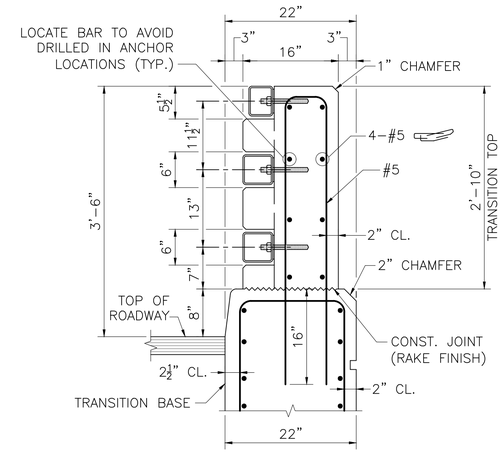

SECTION 20 AT SAFETY CURB

SCALE: 1" = 1'–0"

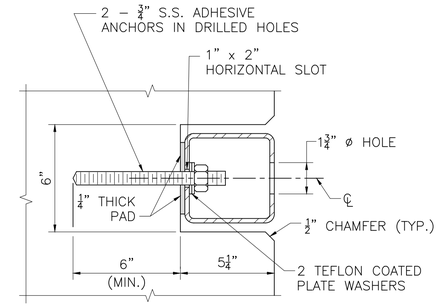

SECTION 23

SCALE: 3" = 1'–0"

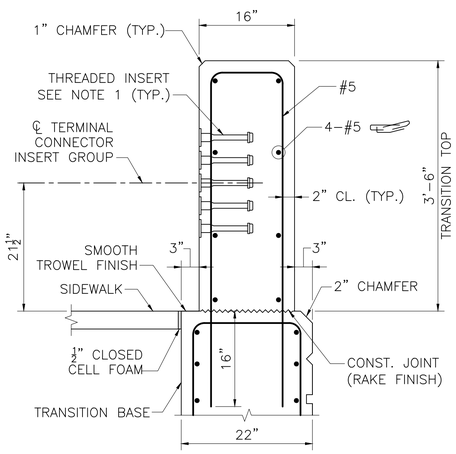

SECTION 18 AT SIDEWALK

SCALE: 1" = 1'–0"

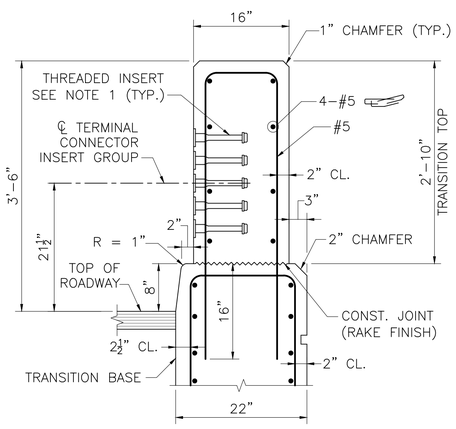

SECTION 21 AT SAFETY CURB

SCALE: 1" = 1'–0"

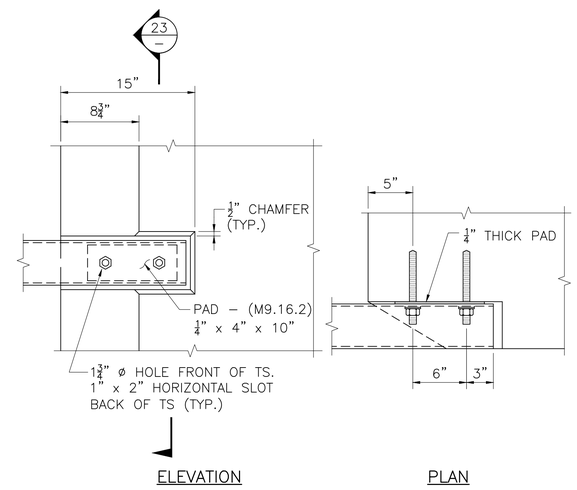

ELEVATION PLAN

RAIL ATTACHMENT

SCALE: 1½" = 1'–0"

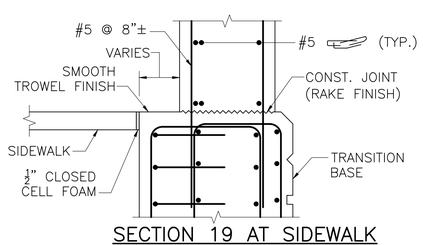

SECTION 19 AT SIDEWALK

SCALE: 1" = 1'–0"

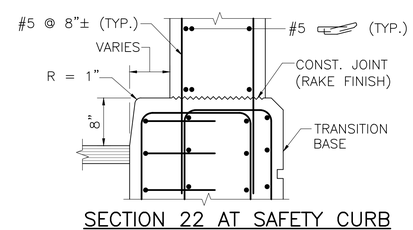

SECTION 22 AT SAFETY CURB

SCALE: 1" = 1'–0"

NEWBURYPORT = WEST NEWBURY
PLUMMER SPRING ROAD

STATE	FED. AID PROJ. NO.	SHEET NO.	TOTAL SHEETS
MA	-	36	42
PROJECT FILE NO.		N/A	

HIGHWAY GUARDRAIL TRANSITION S3-TL4 (2 OF 2)

NOTE:

SEE SHEET 17 OF 20 FOR HIGHWAY GUARDRAIL TRANSITION NOTES.

COMMONWEALTH OF MASSACHUSETTS
MassDOT, Highway Division
APPROVED UNDER PROVISIONS OF MASS. GEN. LAWS CH 85 S 35

STATE BRIDGE ENGINEER — DATE 3/17/2023

MONTH DD, YYYY	ISSUED FOR CONSTRUCTION
DATE	DESCRIPTION
USE ONLY PRINTS OF LATEST DATE	

2839500_BR17-20(N11007_W20001).DWG Plotted on 15-Mar-2023 10:26 AM
CHAPTER 85 REVIEW 06-24-2021

STATE	FED. AID PROJ. NO.	SHEET NO.	TOTAL SHEETS
MA	-	37	42
PROJECT FILE NO.		N/A	

S3-TL4 RAILING DETAILS (1 OF 2)

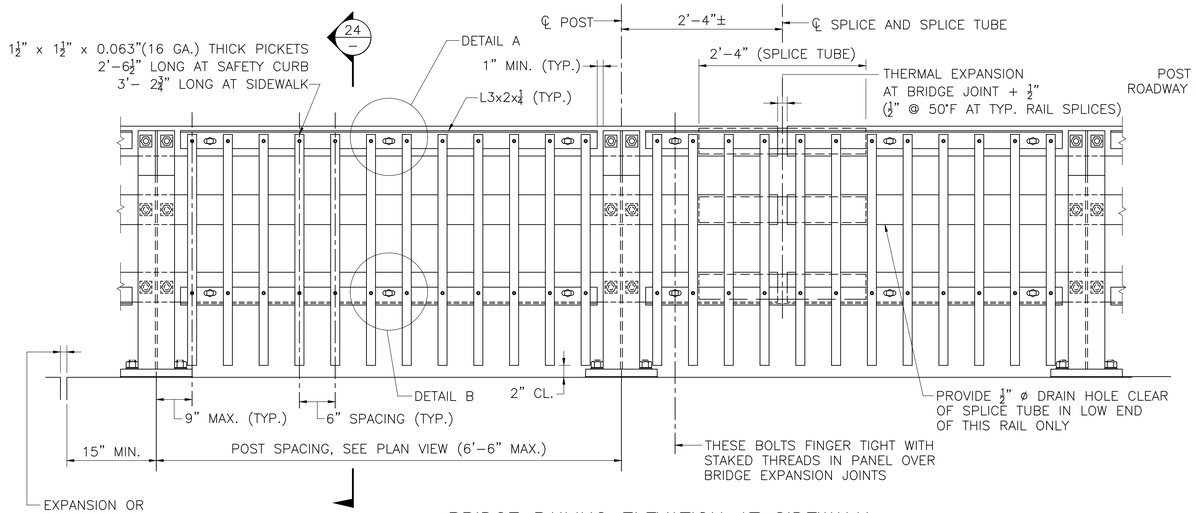

BRIDGE RAILING ELEVATION AT SIDEWALK
SCALE: 1" = 1'-0"

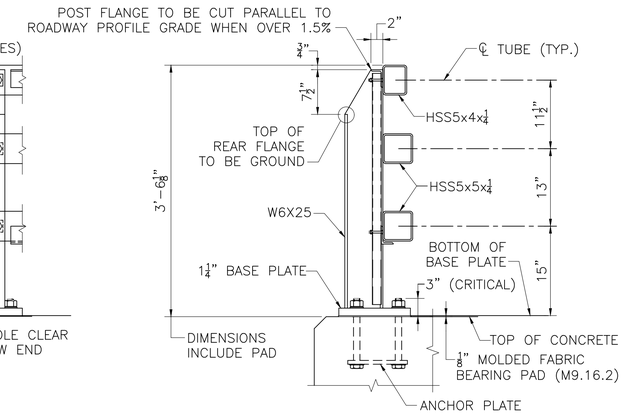

SECTION 24
SCALE: 1" = 1'-0"

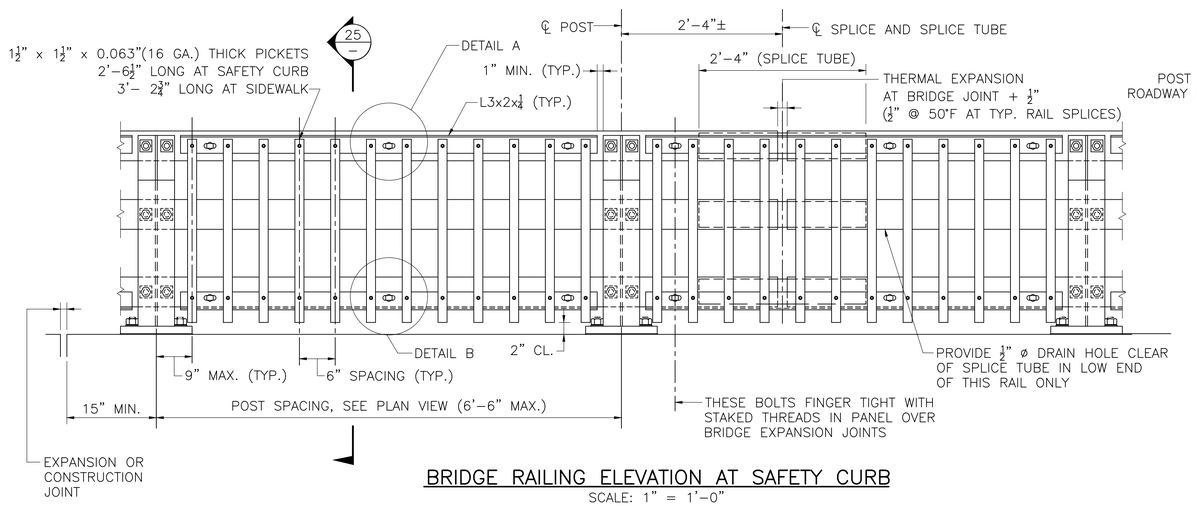

BRIDGE RAILING ELEVATION AT SAFETY CURB
SCALE: 1" = 1'-0"

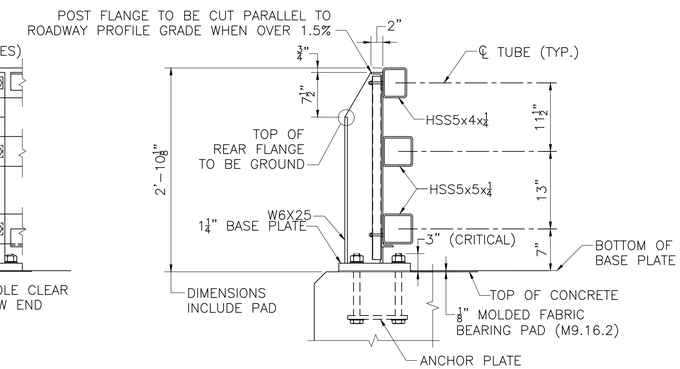

SECTION 25
SCALE: 1" = 1'-0"

RAILING NOTES:

1. RAIL POST AND BASE PLATES SHALL CONFORM TO THE REQUIREMENTS OF AASHTO M 270 GRADE 50. HOLLOW RAILING STRUCTURAL TUBING (HSS) SHALL CONFORM TO THE REQUIREMENTS OF ASTM A 500 WITH A CERTIFIED Fy = 50 KSI MINIMUM. THE MINIMUM HORIZONTAL BENDING RADII OF THE HSS TUBING SHALL BE 8 FEET. PICKET CARRIER ANGLES, ANCHOR PLATES, AND SPLICE TUBE PLATES SHALL CONFORM TO THE REQUIREMENTS OF AASHTO M 270 GRADE 36. PICKET TUBING SHALL CONFORM TO ASTM A 513 WITH Fy = 36 KSI MIN. OR A 500 GRADE B.
2. ALL STEEL (EXCEPT THE ⅝" ANCHOR PLATE AND FASTENERS) SHALL BE GALVANIZED AND PAINTED DARK BRONZE (FEDERAL STD. 595B COLOR NO. 10045). ANCHOR PLATE SHALL BE GALVANIZED ONLY. HEADS OF ⅞" ø ROUND HEAD BOLTS SHALL BE PAINTED TO MATCH RAIL.
3. ANCHOR BOLTS SHALL BE SET WITH TEMPLATES. THE NUT SECURING THE POST BASE PLATE TO THE CONCRETE SHALL BE TIGHTENED TO A SNUG FIT AND GIVEN AN ADDITIONAL 1/8 TURN AFTER STEEL IS IN PLACE.
4. RAILS SHALL BE CONTINUOUS OVER A MINIMUM OF FOUR (4) POSTS WITHOUT SPLICES WHERE POSSIBLE. RAILS SHALL BE SPLICED IN THE PANELS OVER EXPANSION JOINT.
5. ENDS OF TUBE SECTIONS SHALL BE SAWED. GRIND SMOOTH EXPOSED EDGES. ALL CUT ENDS SHALL BE TRUE AND SMOOTH.
6. ALL POSTS TO BE PLUMB WHEN PROFILE GRADE EXCEEDS 1.5%. FOR PROFILE GRADES LESS THAN 1.5%, POSTS SHALL BE SET PERPENDICULAR TO GRADE.
7. POST FLANGE WELD DOES NOT REQUIRE MAGNETIC PARTICLE TESTING. WELD SHALL BE BACK-GOUGED ON BACK SIDE EXCEPT AT WEB. WELD IS THE SAME ON BOTH FLANGES.
8. ⅞" ø ROUND HEAD BOLTS SHALL CONFORM TO THE CHEMICAL AND PHYSICAL REQUIREMENTS OF AASHTO M 164.

COMMONWEALTH OF MASSACHUSETTS
MassDOT, Highway Division
APPROVED UNDER PROVISIONS OF MASS. GEN. LAWS CH 85 S 35

STATE BRIDGE ENGINEER — DATE 3/17/2023

DATE	DESCRIPTION
MONTH DD, YYYY	ISSUED FOR CONSTRUCTION
USE ONLY PRINTS OF LATEST DATE	

2839500_BR17-20(N11007_W20001).DWG Plotted on 15-Mar-2023 10:26 AM
CHAPTER 85 REVIEW 06-24-2021

NEWBURYPORT = WEST NEWBURY
PLUMMER SPRING ROAD

STATE	FED. AID PROJ. NO.	SHEET NO.	TOTAL SHEETS
MA	-	38	42
PROJECT FILE NO.		N/A	

S3-TL4 RAILING DETAILS (2 OF 2)

NOTE:

SEE SHEET 19 OF 20 FOR RAILING NOTES.

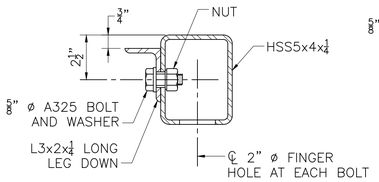

SECTION 26

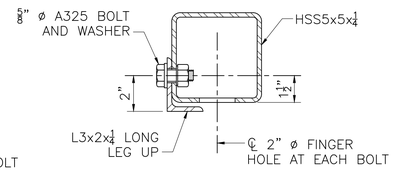

SECTION 28

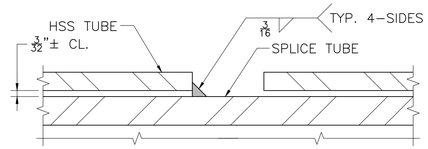

SPLICE DETAIL
FULL SIZE

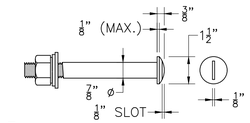

7/8" ø ROUND HEAD BOLT
SCALE: 3" = 1'-0"

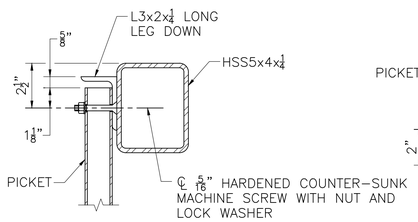

SECTION 27

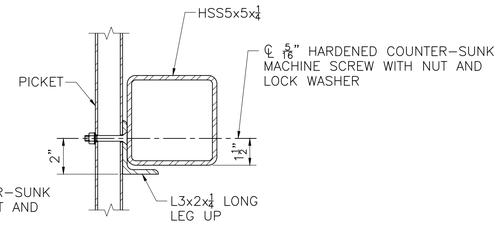

SECTION 29

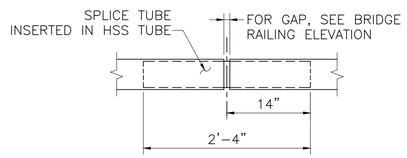

TYPICAL SPLICE
SCALE: 1" = 1'-0"

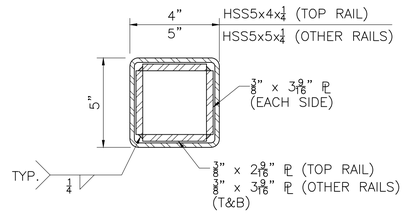

SPLICE TUBE DETAILS
SCALE: 3" = 1'-0"

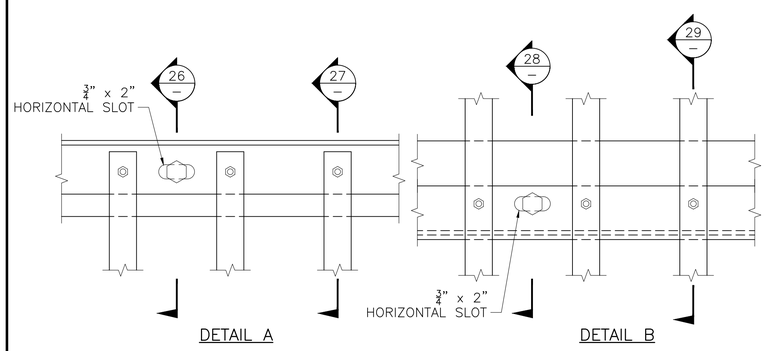

TYPICAL PICKET TO RAIL DETAILS
SCALE: 3" = 1'-0"

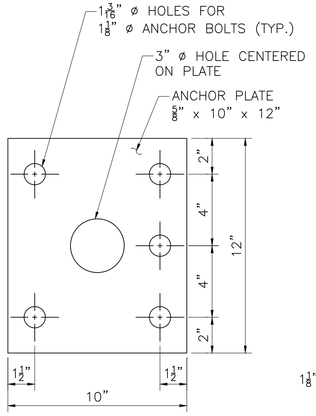

ANCHOR PLATE
SCALE: 3" = 1'-0"

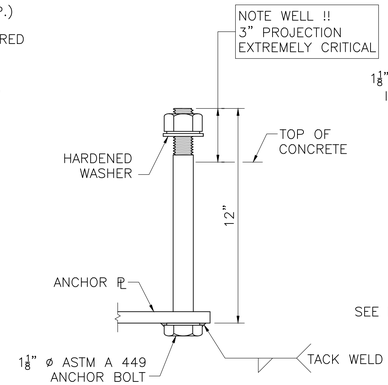

ANCHOR BOLT
SCALE: 3" = 1'-0"

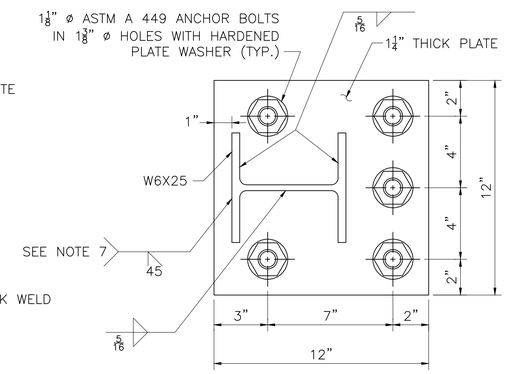

BASE PLATE
SCALE: 3" = 1'-0"

COMMONWEALTH OF MASSACHUSETTS
MassDOT, Highway Division
APPROVED UNDER PROVISIONS OF MASS. GEN. LAWS CH 85 S 35

STATE BRIDGE ENGINEER — 3/17/2023 DATE

MONTH DD, YYYY	ISSUED FOR CONSTRUCTION
DATE	DESCRIPTION
USE ONLY PRINTS OF LATEST DATE	

2839500_BR17-20(N11007_W20001).DWG Plotted on 15-Mar-2023 10:26 AM
CHAPTER 85 REVIEW 06-24-2021
Drawing name: \\Pwdevx\Jobs\Projects-905\2839500\Structural\Drawings\Program\2839500_BR17-20(N11007_W20001).dwg
Plotted on: Wednesday, March 15, 2023 - 10:26am by MARKRUSH