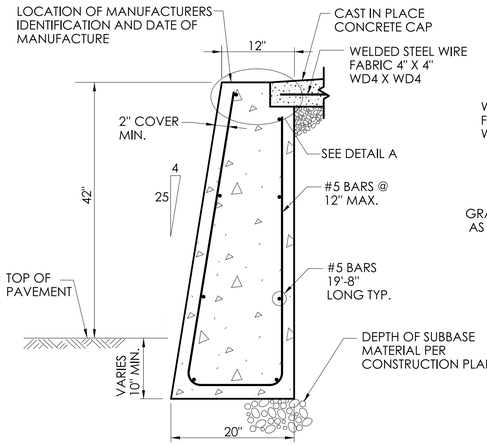

SECTION A
-

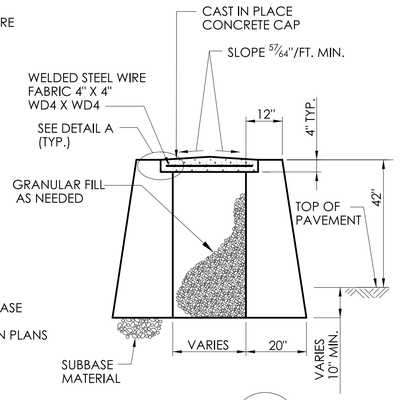

SECTION B
-

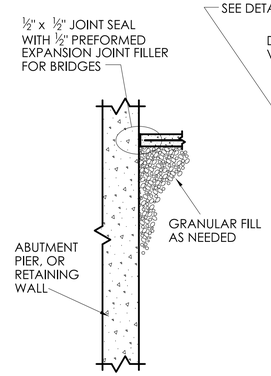

SECTION C
-

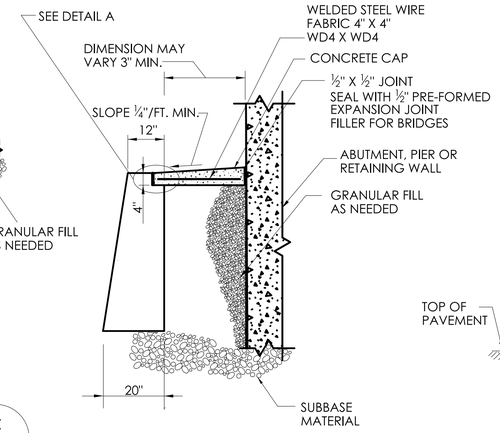

SECTION D
-

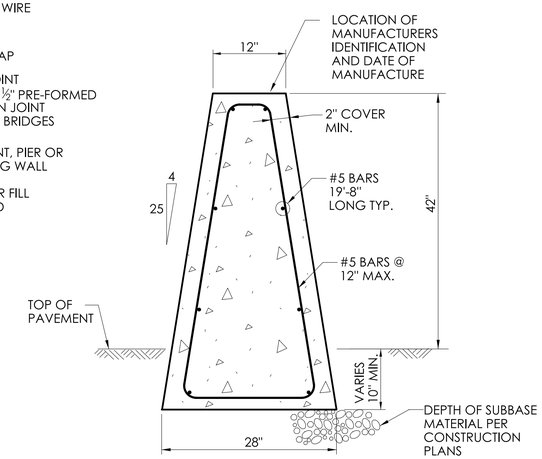

SECTION E
-

GENERAL NOTE:

1. ALTERNATE DESIGNS FOR THE FOLLOWING ITEMS SHALL BE SUBMITTED TO THE ENGINEER FOR APPROVAL :

   A) UNIT END CONNECTIONS SIMILAR TO DESIGNS SHOWN.

   B) LIFTING KEYS OR OTHER HANDLING DEVICES.

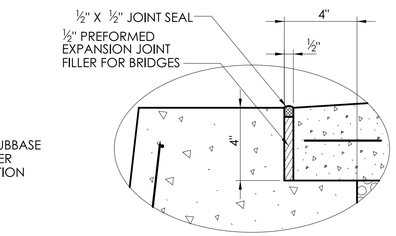

DETAIL A

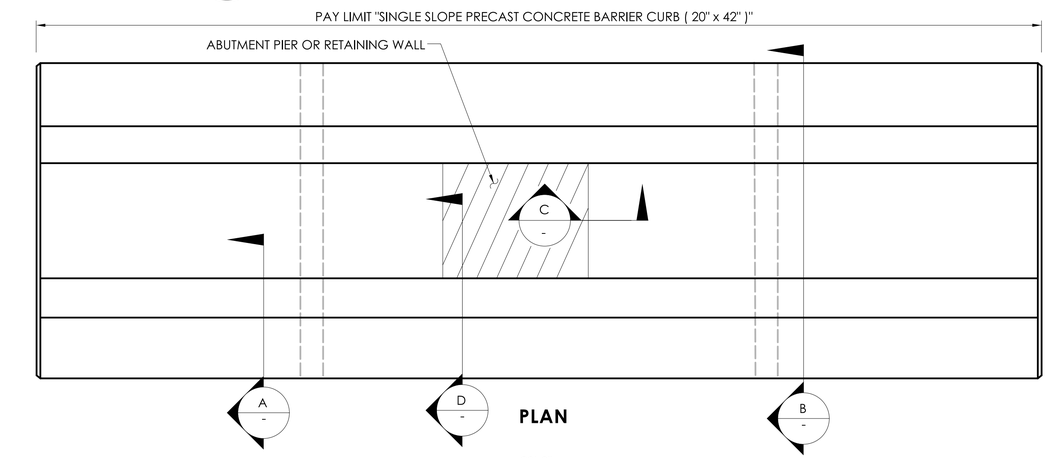

PLAN

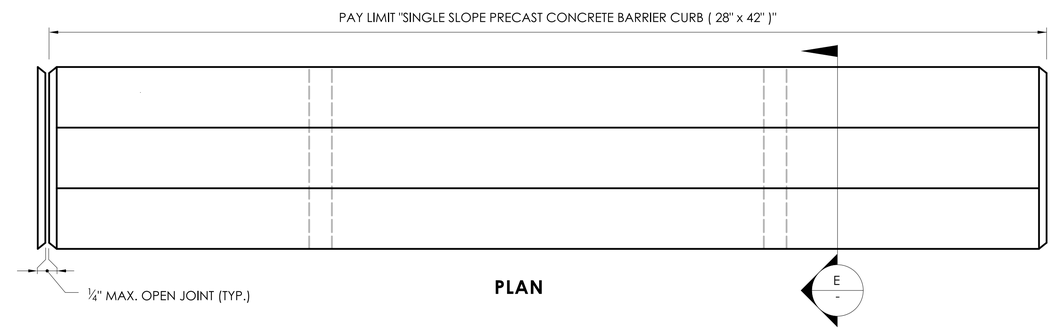

PLAN

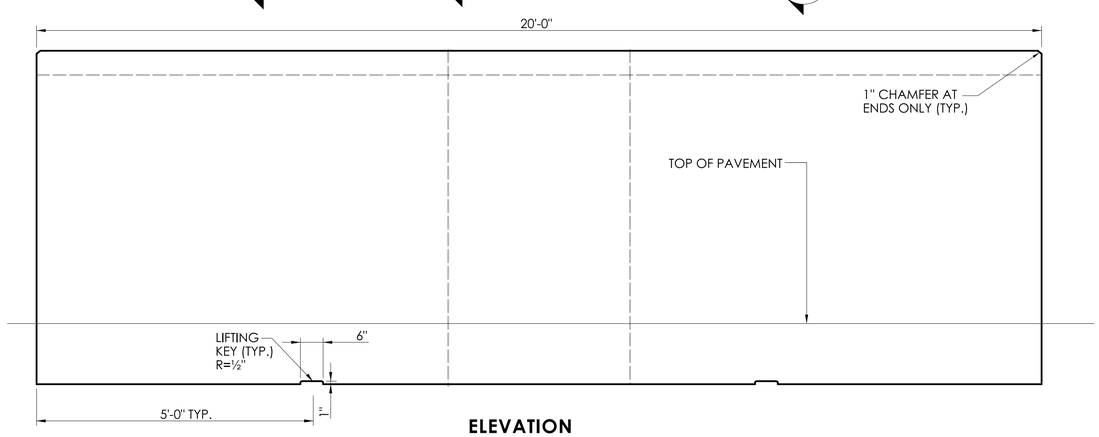

ELEVATION

42" HIGH SINGLE SLOPE PRECAST CONCRETE BARRIER CURB AT PIER ABUTMENT OR RETAINING WALL

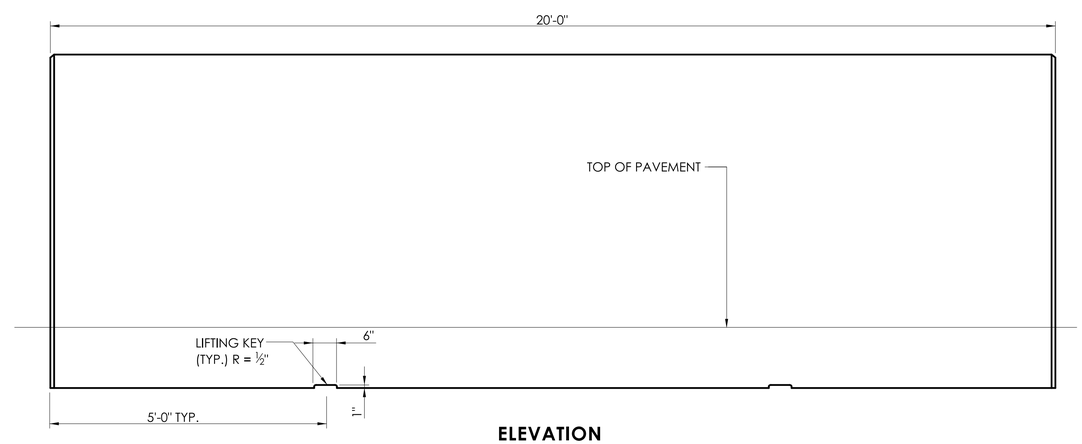

ELEVATION

42" HIGH SINGLE SLOPE PRECAST CONCRETE BARRIER CURB AT ROADSIDE APPLICATION

MASH 2016 COMPLIANT
APPROVAL ID. 2019-02

	NOT TO SCALE	SIGNATURE BLOCK: OFFICE OF ENGINEERING 2800 BERLIN TURNPIKE NEWINGTON, CT 06111	SUBMITTED BY: Digitally signed by Leo Fontaine, P.E. Date: 2023.12.28 14:46:41-05'00'	APPROVED BY: Michael N. Calabrese, P.E. 2024.01.04 21:58:52-05'00'	STATE OF CONNECTICUT DEPARTMENT OF TRANSPORTATION	CTDOT STANDARD SHEET	STANDARD SHEET TITLE: 42" SINGLE SLOPE PRECAST CONCRETE BARRIER CURB SHEET 1	STANDARD SHEET NO.: HW- 821_11a

PLOTTED DATE: 12/28/2023