MASSACHUSETTS DEPARTMENT OF TRANSPORTATION
HIGHWAY DIVISION

LAWRENCE
LMRC RAIL TRAIL

STATE	FED. AID PROJ. NO.	SHEET NO.	TOTAL SHEETS
MA	CMQ-003S(733)X	1	245
PROJECT FILE NO.	608930		

TITLE SHEET & INDEX

PLAN AND PROFILE OF

LAWRENCE MANCHESTER RAIL CORRIDOR (LMRC) RAIL TRAIL
BRIDGES L-04-027 (C90), L-04-030 (8JA), L-04-032 (C82), L-04-045 (C91)

IN THE CITY OF

LAWRENCE

ESSEX COUNTY

FEDERAL AID PROJECT NO. CMQ-003S(733)X

THESE PLANS ARE SUPPLEMENTED BY THE OCTOBER 2017 CONSTRUCTION STANDARD DETAILS, THE 2015 OVERHEAD SIGNAL STRUCTURE AND FOUNDATION STANDARD DRAWINGS, MASSDOT TRAFFIC MANAGEMENT PLANS AND DETAIL DRAWINGS, THE 1990 STANDARD DRAWINGS FOR SIGNS AND SUPPORTS, THE 1968 STANDARD DRAWINGS FOR TRAFFIC SIGNALS AND HIGHWAY LIGHTING, AND THE LATEST EDITION OF THE AMERICAN STANDARD FOR NURSERY STOCK.

INDEX

SHEET NO.	DESCRIPTION
1	TITLE SHEET & INDEX
2	LEGEND & ABBREVIATIONS
3	KEY PLAN
4	BORING LOGS
5-8	TYPICAL SECTIONS & PAVEMENT NOTES
9-24	CONSTRUCTION PLANS
25-29	PROFILES
30-45	CURB TIE & GRADING PLANS
46-56	TRAFFIC SIGN & PAVEMENT MARKING PLANS
57	TRAFFIC SIGN SUMMARY
58-61	TRAFFIC SIGNAL PLANS
62-65	TEMPORARY TRAFFIC CONTROL PLANS
66-81	UTILITY PLANS
82-96	LIGHTING PLANS
97-100	LIGHTING DETAILS
101-123	LANDSCAPE PLANS & DETAILS
124	WETLAND DETAILS
125-129	CONSTRUCTION DETAILS
130-131	CURB RAMP & DRIVEWAY DETAILS
132-138	BRIDGE PLANS - L-04-030
139-152	BRIDGE PLANS - L-04-032
153-158	BRIDGE PLANS - L-04-045
159-172	BRIDGE PLANS - L-04-027
173-245	CROSS SECTIONS

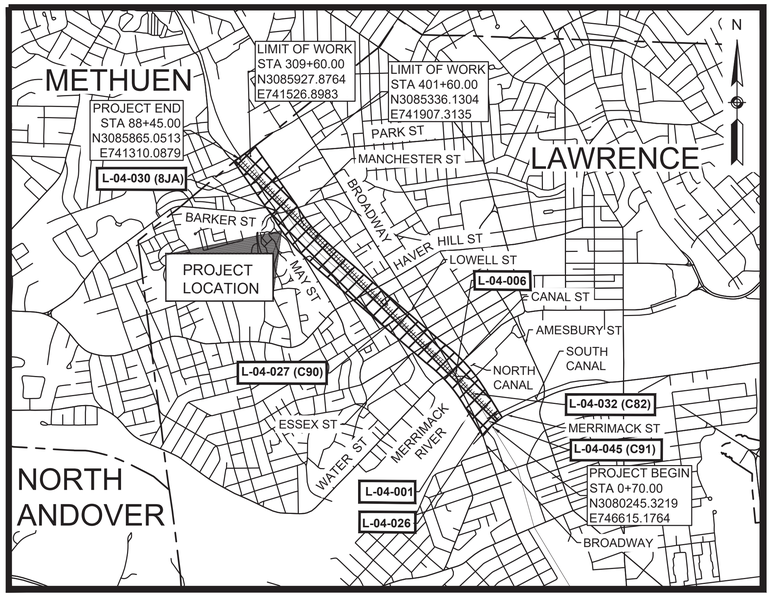

0 1500 3000 4500 6000

SCALE: 1" = 1500'

LENGTH OF PROJECT ALONG RAIL CORRIDOR = 7,900.00 FEET = 1.496 MILES
LENGTH OF PROJECT ALONG LOWELL STREET = 500.00 FEET = 0.095 MILES

SHEETS 82-100

COMMONWEALTH OF MASSACHUSETTS
RONALD W. BUIA
No. 23574
REGISTERED
PROFESSIONAL ENGINEER

Ronald W. Buia Digitally signed by Ronald W. Buia Date: 2024.09.20 17:34:17 -04'00'

Ronald W. Buia, Inc.
Electrical Engineers
5 Tilton Lane, Andover, MA 01810
TEL: 978.475.5184
BUIAENGINEERING.COM

SHEETS 101-123

COMMONWEALTH OF MASSACHUSETTS
JOHN N. AMODEO
No. 34424
REGISTERED
LANDSCAPE ARCHITECT

John N. Amodeo Digitally signed by John N. Amodeo Date: 2024.09.20 15:41:42 -04'00'

ARCADIS
1 Federal Street
Boston MA 02110 USA
tel 617 450 0701
www.arcadis.com

COMMONWEALTH OF MASSACHUSETTS
LAUREN NICHOLSON
CIVIL
No. 56061
PROFESSIONAL ENGINEER

Lauren Nicholson Digitally signed by Lauren Nicholson Date: 2024.09.20 18:17:23 -04'00'

TEC
The Engineering Corp

282 Merrimack St
2nd Floor
Lawrence, MA 01843
978-794-1792

311 Main Street
2nd Floor
Worcester, MA 01608
508-868-5104

169 Ocean Blvd, Unit 3
PO Box 249
Hampton, NH 03842
603-601-8154

www.TheEngineeringCorp.com

DATE	DESCRIPTION	REV #

massDOT
Massachusetts Department of Transportation
Highway Division

APPROVED

Carrie Lavallee Digitally signed by Carrie Lavallee, P.E. Date: 2024.09.23 17:00:57 -04'00'

09/23/2024

CHIEF ENGINEER **DATE**

608930_HDI\(TITLE SHEET).DWG Plotted on 19-Sep-2024 11:46 AM

GENERAL SYMBOLS

EXISTING	PROPOSED	DESCRIPTION
JB	JB	JERSEY BARRIER
CB	CB/GI	CATCH BASIN OR GUTTER INLET
	CBCI/GICI	CATCH BASIN OR GUTTER INLET W/ CURB INLET
FP	FP	FLAG POLE
GP	GP	GAS PUMP
MB	MB	MAIL BOX
		POST SQUARE
		POST CIRCULAR
WELL	WELL	WELL
EHH	EHH	ELECTRIC HANDHOLE
		FENCE GATE POST
GG	GG	GAS GATE
BHL #	BHL #	BORING HOLE
MW #	MW #	MONITORING WELL
TP #	TP #	TEST PIT
		HYDRANT
		LIGHT POLE
CO.BD.		COUNTY BOUND
		GPS POINT
		CABLE MANHOLE
		DRAINAGE MANHOLE
		ELECTRIC MANHOLE
		GAS MANHOLE
		MISC MANHOLE
		SEWER MANHOLE
		TELEPHONE MANHOLE
		WATER MANHOLE
MHB	MHB	MASSACHUSETTS HIGHWAY BOUND
MON		MONUMENT
SB		STONE BOUND
TB		TOWN OR CITY BOUND
		TRAVERSE OR TRIANGULATION STATION
TPL or GUY	TPL or GUY	TROLLEY POLE OR GUY POLE
HTP		TRANSMISSION POLE
UFB	UFB	UTILITY POLE W/ FIREBOX
UPDL	UPDL	UTILITY POLE WITH DOUBLE LIGHT
ULT	ULT	UTILITY POLE W / 1 LIGHT
UPL	UPL	UTILITY POLE
		BUSH
SIZE & TYPE		TREE
		STUMP
		SWAMP / MARSH
WG	WG	WATER GATE
WSO	WSO	WATER SHUTOFF/CURB STOP
PM	PM	PARKING METER
		OVERHEAD CABLE/WIRE
		CURBING
100 99		CONTOURS (ON-THE-GROUND SURVEY DATA)
100 99		CONTOURS (PHOTOGRAMMETRIC DATA)
		UNDERGROUND DRAIN PIPE (DOUBLE LINE 24 INCH AND OVER)
		UNDERGROUND ELECTRIC DUCT (DOUBLE LINE 24 INCH AND OVER)
		UNDERGROUND GAS MAIN (DOUBLE LINE 24 INCH AND OVER)
		UNDERGROUND SEWER MAIN (DOUBLE LINE 24 INCH AND OVER)
		UNDERGROUND TELEPHONE DUCT (DOUBLE LINE 24 INCH AND OVER)
		UNDERGROUND WATER MAIN (DOUBLE LINE 24 INCH AND OVER)
		BALANCED STONE WALL
		GUARD RAIL - STEEL POSTS
		GUARD RAIL - WOOD POSTS
x	x	CHAIN LINK OR METAL FENCE
		WOOD FENCE
		SEDIMENT CONTROL BARRIER
		COIR LOG
		TREE LINE
		LIMIT OF SEEDING
		EDGE OF PAVEMENT
		SAWCUT LINE
		TOP OR BOTTOM OF SLOPE
		LIMIT OF EDGE OF MICROMILLING AND OVERLAY
		BANK OF RIVER OR STREAM
		BORDER OF WETLAND
		100 FT WETLAND BUFFER
		200 FT RIVERFRONT BUFFER
		STATE HIGHWAY LAYOUT
		TOWN OR CITY LAYOUT
		COUNTY LAYOUT
		RAILROAD SIDELINE
		TOWN OR CITY BOUNDARY LINE
		PROPERTY LINE OR APPROXIMATE PROPERTY LINE
		EASEMENT

PAVEMENT MARKINGS SYMBOLS

EXISTING	PROPOSED	DESCRIPTION
		PAVEMENT ARROW - WHITE
ONLY	ONLY	LEGEND "ONLY" - WHITE
		BIKE LANE LEGEND - WHITE
	SL	STOP LINE
	CW	CROSSWALK
	SWL	SOLID WHITE LINE
	SYL	SOLID YELLOW LINE
	BWL	BROKEN WHITE LINE
	BYL	BROKEN YELLOW LINE
	DWL	6" DOTTED WHITE LINE (3' LINE W/ 9' GAP)
	DYL	6" DOTTED YELLOW LINE (3' LINE W/ 9' GAP)
	DWLEx	6" DOTTED WHITE LINE EXTENSION (2' LINE W/ 6' GAP)
	DYLEx	6" DOTTED YELLOW LINE EXTENSION (2' LINE W/ 6' GAP)
	DBWL	DOUBLE WHITE LINE
	DBYL	DOUBLE YELLOW LINE
	YGL	12" YELLOW GORE LINE (3:1, 10' O.C.)

TRAFFIC SYMBOLS

EXISTING	PROPOSED	DESCRIPTION
		CONTROLLER CABINET, FOUNDATION
		CONTROLLER CABINET, FOUNDATION, CONC. PAD
		MAST ARM FOUNDATION (SCALE OF BLOCK = DIAMETER IN INCHES)
		MAST ARM (LENGTH NOTED)
		EMERGENCY PREEMPTION CONFIRMATION STROBE LIGHT
		VEHICULAR SIGNAL HEAD
		PEDESTRIAN SIGNAL HEAD
		MAST ARM OR TS POLE MOUNTED SIGN
		EMERGENCY PRE-EMPTION RECEIVER
		EMERGENCY PRE-EMPTION CONFIRMATION STROBE
		PEDESTRIAN PUSH BUTTON
		YAGI ANTENNA
		BICYCLE WIRE LOOP DETECTOR (SIZE AS NOTED)
		WIRE LOOP DETECTOR (SIZE AND TYPE NOTED)
		TRAFFIC SIGN (1 POST)
		TRAFFIC SIGN (2 POST)
		PULL BOX 12"x12" (OR AS NOTED)
		ELECTRIC HANDHOLE 12"x24" (OR AS NOTED)
		TRAFFIC SIGNAL CONDUIT

ABBREVIATIONS

GENERAL

AADT	ANNUAL AVERAGE DAILY TRAFFIC
ABAN	ABANDON
ADJ	ADJUST
APPROX.	APPROXIMATE
A.C.	ASPHALT CONCRETE
ACCM PIPE	ASPHALT COATED CORRUGATED METAL PIPE
BIT.	BITUMINOUS
BC	BOTTOM OF CURB
BD.	BOUND
BL	BASELINE
BLDG	BUILDING
BM	BENCHMARK
BO	BY OTHERS
BOS	BOTTOM OF SLOPE
BR.	BRIDGE
CB	CATCH BASIN
CBCI	CATCH BASIN WITH CURB INLET
CC	CEMENT CONCRETE
CCM	CEMENT CONCRETE MASONRY
CEM	CEMENT
CI	CURB INLET
CIP	CAST IRON PIPE
CIT	CHANGE IN TYPE
CLF	CHAIN LINK FENCE
CL	CENTERLINE
CMP	CORRUGATED METAL PIPE
CSP	CORRUGATED STEEL PIPE
CO.	COUNTY
CONC	CONCRETE
CONT	CONTINUOUS
CONST	CONSTRUCTION
CR GR	CROWN GRADE
DHV	DESIGN HOURLY VOLUME
DI	DROP INLET
DIA	DIAMETER
DIP	DUCTILE IRON PIPE
DW	STEADY DON'T WALK - PORTLAND ORANGE
DWP	DETECTABLE WARNING PANEL
DWY	DRIVEWAY
ELEV (or EL.)	ELEVATION
EMB	EMBANKMENT
EOP	EDGE OF PAVEMENT
EXIST (or EX)	EXISTING
EXC	EXCAVATION
F&C	FRAME AND COVER
F&G	FRAME AND GRATE
FDN.	FOUNDATION
FDP	FULL DEPTH PAVEMENT
FLDSTN	FIELDSTONE
GAR	GARAGE
GC	GRANITE CURB
GD	GROUND
GG	GAS GATE
GI	GUTTER INLET
GIP	GALVANIZED IRON PIPE
GRAN	GRANITE
GRAV	GRAVEL
GRD	GUARD
HDW	HEADWALL
HH	HAND HOLE
HMA	HOT MIX ASPHALT
HOR	HORIZONTAL
HYD	HYDRANT
INV	INVERT
JCT	JUNCTION
L	LENGTH OF CURVE
LB	LEACH BASIN
LOG	LIMIT OF GRADING
LP	LIGHT POLE
L&S	LOAM AND SEED
LT	LEFT
MAX	MAXIMUM
MB	MAILBOX
MH	MANHOLE
MHB	MASSACHUSETTS HIGHWAY BOUND
MIN	MINIMUM
NIC	NOT IN CONTRACT
NO.	NUMBER
OCS	OUTLET CONTROL STRUCTURE
PC	POINT OF CURVATURE
PCC	POINT OF COMPOUND CURVATURE
P.G.L.	PROFILE GRADE LINE
PI	POINT OF INTERSECTION
POC	POINT ON CURVE
POT	POINT ON TANGENT
PRC	POINT OF REVERSE CURVATURE
PROJ	PROJECT

LAWRENCE
LMRC RAIL TRAIL

STATE	FED. AID PROJ. NO.	SHEET NO.	TOTAL SHEETS
MA	CMQ-003S(733)X	2	245
PROJECT FILE NO.	608930		

LEGEND & ABBREVIATIONS

ABBREVIATIONS (cont.)

GENERAL

PROP	PROPOSED
PSB	PLANTABLE SOIL BORROW
PT	POINT OF TANGENCY
PVC	POINT OF VERTICAL CURVATURE
PVI	POINT OF VERTICAL INTERSECTION
PVT	POINT OF VERTICAL TANGENCY
PVMT	PAVEMENT
PWW	PAVED WATERWAY
R	RADIUS OF CURVATURE
R&D	REMOVE AND DISPOSE
RCP	REINFORCED CONCRETE PIPE
RD	ROAD
RDWY	ROADWAY
REM	REMOVE
REMOD	REMODEL
RET	RETAIN
RET WALL	RETAINING WALL
ROW	RIGHT OF WAY
RR	RAILROAD
RRFB	RECTANGULAR RAPID FLASHING BEACON
R&R	REMOVE AND RESET
R&S	REMOVE AND STACK
RT	RIGHT
SB	STONE BOUND
SHLD	SHOULDER
SMH	SEWER MANHOLE
ST	STREET
STA	STATION
SSD	STOPPING SIGHT DISTANCE
SHLO	STATE HIGHWAY LAYOUT LINE
SW	SIDEWALK
T	TANGENT DISTANCE OF CURVE/TRUCK %
TAN	TANGENT
TEMP	TEMPORARY
TC	TOP OF CURB
TOS	TOP OF SLOPE
TYP	TYPICAL
UP	UTILITY POLE
VAR	VARIES
VERT	VERTICAL
VC	VERTICAL CURVE
WCR	WHEEL CHAIR RAMP
WG	WATER GATE
WIP	WROUGHT IRON PIPE
WM	WATER METER/WATER MAIN
X-SECT	CROSS SECTION

TRAFFIC SIGNAL ABBREVIATIONS

CAB.	CABINET
CCVE	CLOSED CIRCUIT VIDEO EQUIPMENT
DW	STEADY DON'T WALK
FDW	FLASHING DON'T WALK
FR	FLASHING CIRCULAR RED
FRL	FLASHING RED LEFT ARROW
FRR	FLASHING RED RIGHT ARROW
FY	FLASHING CIRCULAR YELLOW
FYL	FLASHING YELLOW LEFT ARROW
FYR	FLASHING YELLOW RIGHT ARROW
G	STEADY CIRCULAR GREEN
GL	STEADY GREEN LEFT ARROW
GR	STEADY GREEN RIGHT ARROW
GSL	STEADY GREEN SLASH LEFT ARROW
GSR	STEADY GREEN SLASH RIGHT ARROW
GV	STEADY GREEN VERTICAL ARROW
OL	OVERLAP
PED	PEDESTRIAN
PTZ	PAN, TILT, ZOOM
R	STEADY CIRCULAR RED
RL	STEADY RED LEFT ARROW
RR	STEADY RED RIGHT ARROW
TR SIG	TRAFFIC SIGNAL
TSC	TRAFFIC SIGNAL CONDUIT
W	STEADY WALKING PERSON
Y	STEADY CIRCULAR YELLOW
YL	STEADY YELLOW LEFT ARROW

608930_HD2(LEGEND).DWG Plotted on 6-Sep-2024 9:42 AM

LAWRENCE
LMRC RAIL TRAIL

STATE	FED. AID PROJ. NO.	SHEET NO.	TOTAL SHEETS
MA	CMQ-003S(733)X	3	245
PROJECT FILE NO.		608930	

KEY PLAN

LEGEND
- CONSTRUCTION PLANS
- TRAFFIC SIGN & PAVEMENT MARKING PLANS
- TRAFFIC SIGNAL PLANS
- CURB TIE & GRADING PLANS
- UTILITY PLANS
- LIGHTING PLANS
- LANSDCAPING PLANS
- BORING LOCATION

N

PROJECT BEGIN
STA 0+70
N3080245.3219
E746615.1764

15+45.76 LAWRENCE RAIL TRAIL A BL =
110+78.52 CANAL STREET WATER STREET BL

24+98.80 LAWRENCE RAIL TRAIL B BL =
111+15.88 CANAL STREET WATER STREET BL

49+43.93 LAWRENCE RAIL TRAIL B BL =
101+09.37 HAVERHILL STREET BL

SEE LOWELL STREET PLANS (SHEETS 24, 45, 58, 81)

24+51.00 LAWRENCE RAIL TRAIL B BL =
15+11.53 LAWRENCE RAIL TRAIL A BL

32+89.30 LAWRENCE RAIL TRAIL B BL =
91+36.49 ESSEX STREET BL

41+15.40 LAWRENCE RAIL TRAIL B BL =
510+49.07 LOWELL STREET BL

74+03.04 LAWRENCE RAIL TRAIL B BL =
10+69.42 MANCHESTER STREET BL

78+49.80 LAWRENCE RAIL TRAIL B BL =
300+00.00 SPICKET RIVER GREENWAY BL

302+82.75 SPICKET RIVER GREENWAY BL =
400+00.00 MANCHESTER STREET PARK BL

LIMIT OF WORK
STA 401+60.00
N3085336.1304
E741907.3135

LIMIT OF WORK
STA 309+60.00
N3085927.8764
E741526.8983

PROJECT END
STA 88+45.00
N3085865.0513
E741310.0879

CONTINUED ABOVE

CONTINUED BELOW

BROADWAY
MERRIMACK STREET
SOUTH CANAL
MERRIMACK RIVER
NORTH CANAL
CANAL STREET
WATER STREET
METHUEN STREET
ESSEX STREET
WINTER STREET
MELVIN STREET
LOWELL STREET
MORTON STREET
COMMON STREET
BRADFORD STREET
WEST STREET
HAVERHILL STREET (ROUTE 110)
~CITY OF LAWRENCE~
~CITY OF METHUEN~
RAILROAD STREET
MAY STREET
RESERVOIR STREET
CURRANT HILL ROAD
MANCHESTER STREET PARK
BOURGOIN PARK
WENDELL STREET
ARCHER STREET
BLAKEIN STREET
HUBBARD PLACE

L-04-026
L-04-001
L-04-032 (C82)
L-04-045 (C91)
L-04-006
L-04-027 (C90)
L-04-030 (8JA)

B-1
B-2
B-3

0 150 300 450 600
SCALE: 1" = 150'

608930_HD3(KEY PLAN).DWG Plotted on 6-Sep-2024 9:43 AM

LAWRENCE
LMRC RAIL TRAIL

STATE	FED. AID PROJ. NO.	SHEET NO.	TOTAL SHEETS
MA	CMQ-003S(733)X	4	245
	PROJECT FILE NO. 608930		

BORINGS LOGS

608930_HDSA(BORINGS).DWG Plotted on 6-Sep-2024 9:44 AM

BORING NOTES:

1. LOCATION OF BORINGS SHOWN ON SHEET 3 THUS: ⊕ B-1 THROUGH B-3.
2. BORINGS TAKEN FOR THE PURPOSE OF DESIGN AND SHOW CONDITIONS AT BORING POINTS ONLY, BUT DO NOT NECESSARILY SHOW THE NATURE OF THE MATERIALS TO BE ENCOUNTERED DURING CONSTRUCTION.
3. WATER LEVELS SHOWN ON THE BORING LOGS WERE PRESERVED AT THE TIME OF TAKING BORINGS AND DO NOT NECESSARILY SHOW THE TRUE GROUND WATER LEVEL.
4. FIGURES TO THE LEFT OF COLUMNS INDICATE DEPTH BELOW SURFACE AT BORING POINT.
5. FIGURES IN COLUMNS INDICATE NUMBER OF BLOWS PRODUCED BY A 30" FALL OF 140 POUND MASS HAMMER REQUIRED TO DRIVE 1 3/8" I.D. SPOON 1 FOOT.
6. BORING SAMPLES TAKEN ON SEPTEMBER 26, 2023.
7. BORING CONTRACTOR: MILLER ENGINEERING & TESTING, INC.
8. SAMPLES ARE STORED AT A STORAGE FACILITY LOCATED ON ROUTE 114 (219 WINTHROP AVE.) IN LAWRENCE MA. THE CONTRACTOR MAY EXAMINE THE SOIL AND ROCK SAMPLES BY CONTACTING THE MASSDOT GEOTECHNICAL SECTION AT 10 PARK PLAZA, BOSTON, MA.

TEST BORING LOG

MILLER ENGINEERING & TESTING, INC.
100 Sheffield Road - Manchester, NH 03103
Ph. (603) 668-6016 - Fax: (603) 668-8641

Project: Broadway & Canal, Lawrence, MA
Project No: 23.096.NH
Date Start: 09-26-23
Date End: 09-26-23
Sheet 1 of 1
Boring No: B-1
Location: N3081463.2033, E745760.4885
Approx. Surface Elev: 50.75

	CASING	SAMPLER	GROUNDWATER OBSERVATIONS Date	Depth	Casing At	Stabilization Period
Type	HSA	SS	09-26-23	14'	20'	Upon Completion
Size	2-1/4" ID	1-3/8" ID				
Hammer		Safety - 140 lbs.				
Fall		30"				

Depth/ Elev.	Casing Blows/ft	Sample No.	Depth Range	Pen.	Rec.	BLOWS 0-6"	6-12"	12-18"	18-24"	Strata Change	Sample Description	Notes
0		-	0.0-0.5	6							-: 6" Concrete	
		S-1	0.5-2.0	18	7		4	2	2		S-1: Brown, fine to medium sand, some gravel, little silt (FILL)	
		S-2	2.0-4.0	24	15	4	3	2	2		S-2: Brown, fine sand, little silt, trace gravel (FILL)	
5		S-3	4.0-6.0	24	13	3	2	2	1		S-3: Brown, fine sand, little silt, trace gravel (FILL)	
		S-4	6.0-8.0	24	12	2	2	2	4		S-4: Brown, fine sand, trace silt	
10		S-5	9.0-11.0	24	12	4	7	5	7		S-5: Olive, fine to medium sand, some silt, little gravel	
15		S-6	14.0-15.5	18	17	3	1	1			S-6: Black, organic silt, little fine sand, wet	
		S-6A	15.5-16.0	6	2				1		S-6A: Brown, fine sand, some silt, wet	
20		S-7	19.0-21.0	24	19	2	2	3	5		S-7: Gray, silt, some fine sand, wet	
25		S-8	24.0-26.0	24	15	1/12"		3	5		S-8: Gray, silt, some fine sand, trace organic fiber, wet	
											BORING TERMINATED AT 26 ft	
30												

Driller: R. Marcoux
Helper: J. Donahue
Inspector: T. Young

COHESIVE CONSISTENCY (BlowsFoot)
0-2 VERY SOFT
3-4 SOFT
5-8 MEDIUM STIFF
9-15 STIFF
16-30 HARD

COHESIONLESS (BlowsFoot)
0-4 VERY LOOSE
4-10 LOOSE
10-30 MEDIUM DENSE
30-50 DENSE
50+ VERY DENSE

PROPORTIONS USED
TRACE: 0-10%
LITTLE: 10-20%
SOME: 20-35%
AND: 35-50%

NOTES:

REMARKS: THE STRATIFICATION LINES REPRESENT THE APPROXIMATE BOUNDARY BETWEEN SOIL TYPES. TRANSITION MAY BE GRADUAL.
WATER LEVEL READINGS HAVE BEEN MADE IN THE DRILL HOLES AT TIMES AND UNDER CONDITIONS STATED ON THE BORING LOGS.
FLUCTUATIONS IN THE LEVEL OF THE GROUNDWATER MAY OCCUR DUE TO OTHER FACTORS THAN THOSE PRESENT AT THE TIME MEASUREMENTS WERE MADE.

TEST BORING LOG

MILLER ENGINEERING & TESTING, INC.
100 Sheffield Road - Manchester, NH 03103
Ph. (603) 668-6016 - Fax: (603) 668-8641

Project: Broadway & Canal, Lawrence, MA
Project No: 23.096.NH
Date Start: 09-26-23
Date End: 09-26-23
Sheet 1 of 1
Boring No: B-2
Location: N3081422.6139, E745788.1027
Approx. Surface Elev: 51.05

	CASING	SAMPLER	GROUNDWATER OBSERVATIONS Date	Depth	Casing At	Stabilization Period
Type	HSA	SS	09-26-23	14'	26'	Upon Completion
Size	2-1/4" ID	1-3/8" ID				
Hammer		Safety - 140 lbs.				
Fall		30"				

Depth/ Elev.	Casing Blows/ft	Sample No.	Depth Range	Pen.	Rec.	BLOWS 0-6"	6-12"	12-18"	18-24"	Strata Change	Sample Description	Notes
0		-	0.0-0.8	9							-: 9" Asphalt	
		S-1	1.0-2.0	12	8			11	11		S-1: Dark brown/black, fine to coarse sand, some silt, little gravel (FILL)	
		S-2	2.0-4.0	24	14	14	9	4	4		S-2: Brown, fine sand, little silt, trace silt	
5		S-3	4.0-6.0	24	8	2	2	4	4		S-3: Brown, fine sand, some silt, trace gravel	
10		S-4	9.0-11.0	24	12	10	16	23	26		S-4: Brown, fine to medium sand, some gravel and silt	
15		S-5	14.0-16.0	24	0	1	2	2	1		S-5: No recovery	
		S-6	16.0-16.5	6	5	6					S-6: Gray, silt, clay, some gravel, wet	
		S-6A	16.5-18.0	18	10		12	8	3		S-6A: Brown, fine sand, little silt, wet	
20		S-7	19.0-21.0	24	3	3	3	3	4		S-7: Brown, fine sand, little silt, wet	
25		S-8	24.0-26.0	24	19	2	2	3	4		S-8: Brown, fine sand, little silt, wet	
											BORING TERMINATED AT 26 ft	
30												

Driller: R. Marcoux
Helper: J. Donahue
Inspector: T. Young

COHESIVE CONSISTENCY (BlowsFoot)
0-2 VERY SOFT
3-4 SOFT
5-8 MEDIUM STIFF
9-15 STIFF
16-30 HARD

COHESIONLESS (BlowsFoot)
0-4 VERY LOOSE
4-10 LOOSE
10-30 MEDIUM DENSE
30-50 DENSE
50+ VERY DENSE

PROPORTIONS USED
TRACE: 0-10%
LITTLE: 10-20%
SOME: 20-35%
AND: 35-50%

NOTES:

REMARKS: THE STRATIFICATION LINES REPRESENT THE APPROXIMATE BOUNDARY BETWEEN SOIL TYPES. TRANSITION MAY BE GRADUAL.
WATER LEVEL READINGS HAVE BEEN MADE IN THE DRILL HOLES AT TIMES AND UNDER CONDITIONS STATED ON THE BORING LOGS.
FLUCTUATIONS IN THE LEVEL OF THE GROUNDWATER MAY OCCUR DUE TO OTHER FACTORS THAN THOSE PRESENT AT THE TIME MEASUREMENTS WERE MADE.

TEST BORING LOG

MILLER ENGINEERING & TESTING, INC.
100 Sheffield Road - Manchester, NH 03103
Ph. (603) 668-6016 - Fax: (603) 668-8641

Project: Broadway & Canal, Lawrence, MA
Project No: 23.096.NH
Date Start: 09-26-23
Date End: 09-26-23
Sheet 1 of 1
Boring No: B-3
Location: N3081410.8308, E745705.3931
Approx. Surface Elev: 51.99

	CASING	SAMPLER	GROUNDWATER OBSERVATIONS Date	Depth	Casing At	Stabilization Period
Type	HSA	SS	09-26-23	9'	20'	Upon Completion
Size	2-1/4" ID	1-3/8" ID				
Hammer		Safety - 140 lbs.				
Fall		30"				

Depth/ Elev.	Casing Blows/ft	Sample No.	Depth Range	Pen.	Rec.	BLOWS 0-6"	6-12"	12-18"	18-24"	Strata Change	Sample Description	Notes
0		S-1	0.0-2.0	24	8	4	9	15	8		S-1: Dark brown, fine to coarse sand, some gravel, little silt, trace fine roots (FILL)	
		S-2	2.0-4.0	24	7	6	5	4	3		S-2: Dark brown to brown, fine to coarse sand, some gravel, little silt (FILL)	
5		S-3	4.0-6.0	24	12	2	3	3	12		S-3: Brown, fine to medium sand, little gravel, little silt	
10		S-4	9.0-11.0	24	12	6	2	1/12"			S-4: Brown, fine to medium sand, some silt, trace gravel, wet	
		S-5	11.0-13.0	24	15	1	2	2	3		S-5: Brown, fine to medium sand, some silt and gravel, wet (dark brown, organic silt, little organic fibers in tip of split-spoon)	
15		S-6	14.0-16.0	24	12	4	5	4	4		S-6: Black, organic silt, some fine sand, wet	
		S-7	17.0-19.0	24	14	2	1	2	3		S-7: Gray, fine sand, little silt, wet	
20		S-8	19.0-21.0	24	17	2	3	3	4		S-8: Gray, fine sand, little silt, trace organic fibers, wet	
25		S-9	24.0-26.0	24	19	1	2	1	1		S-9: Gray/Brown, fine sand, little silt, trace organic fibers, wet	
											BORING TERMINATED AT 26 ft	
30												

Driller: R. Marcoux
Helper: J. Donahue
Inspector: T. Young

COHESIVE CONSISTENCY (BlowsFoot)
0-2 VERY SOFT
3-4 SOFT
5-8 MEDIUM STIFF
9-15 STIFF
16-30 HARD

COHESIONLESS (BlowsFoot)
0-4 VERY LOOSE
4-10 LOOSE
10-30 MEDIUM DENSE
30-50 DENSE
50+ VERY DENSE

PROPORTIONS USED
TRACE: 0-10%
LITTLE: 10-20%
SOME: 20-35%
AND: 35-50%

NOTES:

REMARKS: THE STRATIFICATION LINES REPRESENT THE APPROXIMATE BOUNDARY BETWEEN SOIL TYPES. TRANSITION MAY BE GRADUAL.
WATER LEVEL READINGS HAVE BEEN MADE IN THE DRILL HOLES AT TIMES AND UNDER CONDITIONS STATED ON THE BORING LOGS.
FLUCTUATIONS IN THE LEVEL OF THE GROUNDWATER MAY OCCUR DUE TO OTHER FACTORS THAN THOSE PRESENT AT THE TIME MEASUREMENTS WERE MADE.

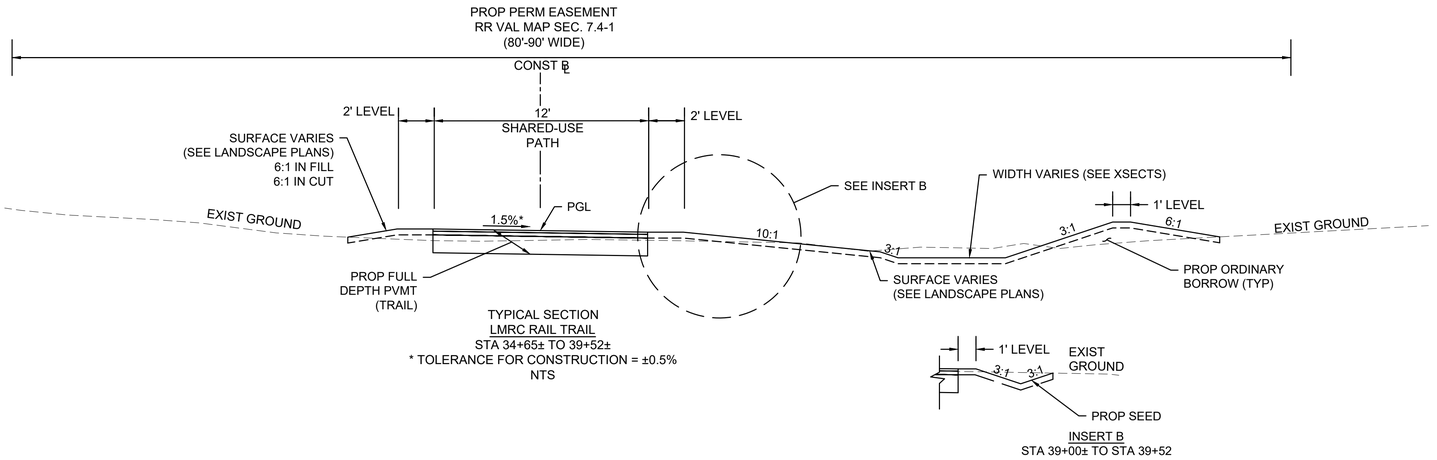

TYPICAL SECTION
LMRC RAIL TRAIL
STA 34+65± TO 39+52±
* TOLERANCE FOR CONSTRUCTION = ±0.5%
NTS

INSERT B
STA 39+00± TO STA 39+52

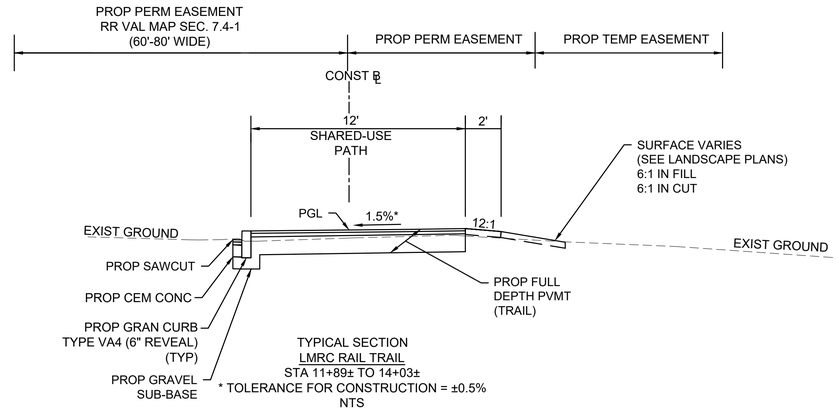

TYPICAL SECTION
LMRC RAIL TRAIL
STA 11+89± TO 14+03±
* TOLERANCE FOR CONSTRUCTION = ±0.5%
NTS

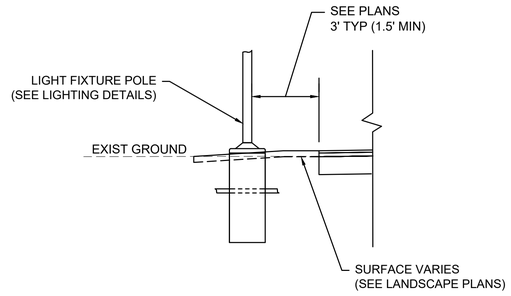

LIGHTING FIXTURE OFFSET
LMRC RAIL TRAIL

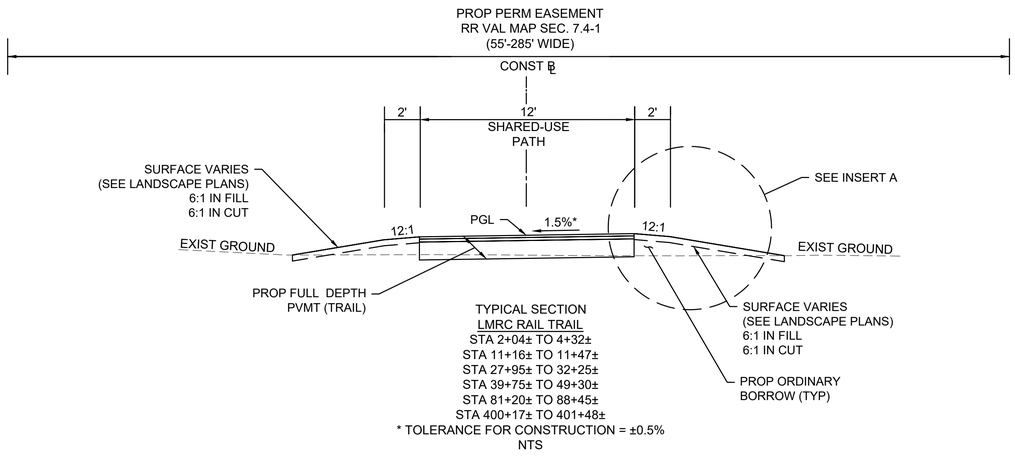

TYPICAL SECTION
LMRC RAIL TRAIL
STA 2+04± TO 4+32±
STA 11+16± TO 11+47±
STA 27+95± TO 32+25±
STA 39+75± TO 49+30±
STA 81+20± TO 88+45±
STA 400+17± TO 401+48±
* TOLERANCE FOR CONSTRUCTION = ±0.5%
NTS

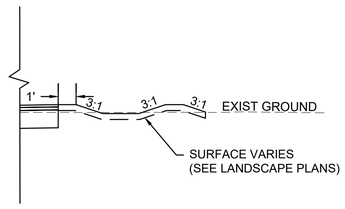

INSERT A
STA 39+75± TO STA 49+30±

LAWRENCE
LMRC RAIL TRAIL

STATE	FED. AID PROJ. NO.	SHEET NO.	TOTAL SHEETS
MA	CMQ-003S(733)X	5	245
	PROJECT FILE NO. 608930		

TYPICAL SECTIONS AND PAVEMENT NOTES - 1 OF 4

PAVEMENT NOTES

PROPOSED HOT MIX ASPHALT (HMA) MILL & OVERLAY

SURFACE: 1½" SUPERPAVE SURFACE COURSE - 9.5 POLYMER (SSC - 9.5 - P) OVER
1½" PAVEMENT FINE MILLING

PROPOSED HOT MIX ASPHALT (HMA) DRIVEWAY & HOT MIX ASPHALT (HMA) SIDEWALK AT DRIVEWAYS

SURFACE: 1½" SUPERPAVE SURFACE COURSE - 9.5 (SSC - 9.5) OVER
2½" SUPERPAVE SURFACE COURSE - 12.5 (SSC - 12.5) OVER

BASE: 8" GRAVEL BORROW, TYPE b
ADD GRAVEL BORROW. TYPE b AS REQUIRED

PROPOSED HOT MIX ASPHALT (HMA) SIDEWALK/ WALK

SURFACE: 1¼" SUPERPAVE SURFACE COURSE - 9.5 (SSC - 9.5) OVER
1¾" SUPERPAVE SURFACE COURSE - 12.5 (SSC - 12.5) OVER

BASE: 8" GRAVEL BORROW, TYPE b

PROPOSED FULL DEPTH PAVEMENT (ROADWAY- SOUTH BROADWAY/ CANAL STREET/ WATER STREET)

SURFACE: 1½" SUPERPAVE SURFACE COURSE - 9.5 POLYMER (SSC - 9.5 - P) OVER
2¼" SUPERPAVE INTERMEDIATE COURSE - 19.0 (SIC - 19.0) OVER

BASE: 4½" SUPERPAVE BASE COURSE - 37.5 (SBC - 37.5) OVER

SUBBASE: 12" GRAVEL BORROW, TYPE b

PROPOSED FULL DEPTH PAVEMENT (ROADWAY - LOWELL STREET)

SURFACE: 1½" SUPERPAVE SURFACE COURSE - 9.5 POLYMER (SSC - 9.5 - P) OVER
1¾" SUPERPAVE INTERMEDIATE COURSE - 12.5 (SIC-12.5)

BASE: 4½" SUPERPAVE BASE COURSE - 37.5 (SBC-37.5)

SUBBASE: 4" DENSE GRADED CRUSHED STONE OVER
8" GRAVEL BORROW, TYPE B

PROPOSED FULL DEPTH PAVEMENT (OVER LOWELL STREET BRIDGE)

SURFACE: 1½" SUPERPAVE SURFACE COURSE - 9.5 POLYMER (SSC - 9.5 - P) OVER
1¾" SUPERPAVE INTERMEDIATE COURSE - 12.5 (SIC-12.5)

BASE: 4½" SUPERPAVE BASE COURSE - 37.5 (SBC-37.5)

SUBBASE: 4" DENSE GRADED CRUSHED STONE OVER
8" (MIN) GRAVEL BORROW, TYPE B

PROPOSED FULL DEPTH PAVEMENT (TRAIL)

SURFACE: 1½" SUPERPAVE SURFACE COURSE - 9.5 (SSC - 9.5) OVER
2½" SUPERPAVE INTERMEDIATE COURSE - 12.5 (SIC - 12.5) OVER

BASE: 12" (MIN) GRAVEL BORROW, TYPE b

PROPOSED PERMANENT PAVEMENT TRENCH PATCH

SURFACE: 1½" SUPERPAVE SURFACE COURSE - 9.5 POLYMER (SSC - 9.5 - P) OVER
2¼" SUPERPAVE INTERMEDIATE COURSE - 19.0 (SIC - 19.0) OVER
(VARIABLE DEPTH (SEE NOTE 5) SUPERPAVE INTERMEDIATE COURSE - 19.0 (SIC - 19.0)
COMPACTED IN 2¼" (MIN) AND 3" (MAX) LIFTS OVER

BASE: 8" GRAVEL BORROW, TYPE b OVER

SUBBASE: EXISTING MATERIAL SUITABLE FOR RE-USE SUPPLEMENTED WITH GRAVEL BORROW AS NECESSARY TO MATCH GRADE (SEE VARIOUS TRENCH DETAILS)

PROPOSED CEMENT CONCRETE SIDEWALK / WALK/ CURB RAMP / MEDIAN

SURFACE: 4" CEMENT CONCRETE (4000 PSI, ¾", 610), AIR ENTRAINED

BASE: 8" GRAVEL BORROW, TYPE b

PROPOSED CEMENT CONCRETE SIDEWALK AT DRIVEWAYS

SURFACE: 6" CEMENT CONCRETE (4000 PSI, ¾", 610), AIR ENTRAINED

BASE: 8" GRAVEL BORROW, TYPE b

PROPOSED GRAVEL WALK

SURFACE: 4" PROCESSED GRAVEL OVER

BASE: 8" GRAVEL BORROW,TYPE b

608930_HDA(TYPICAL SECTIONS).DWG Plotted on 6-Sep-2024 9:36 AM

LAWRENCE
LMRC RAIL TRAIL

STATE	FED. AID PROJ. NO.	SHEET NO.	TOTAL SHEETS
MA	CMQ-003S(733)X	6	245
	PROJECT FILE NO.	608930	

TYPICAL SECTIONS AND PAVEMENT NOTES - 2 OF 4

608930_HD4(TYPICAL SECTIONS).DWG Plotted on 6-Sep-2024 9:37 AM

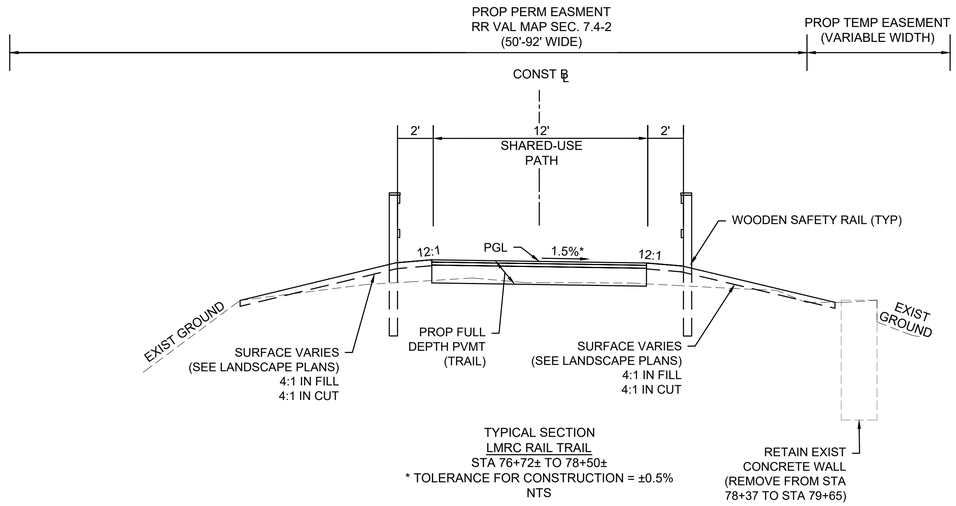

TYPICAL SECTION
LMRC RAIL TRAIL
STA 76+72± TO 78+50±
* TOLERANCE FOR CONSTRUCTION = ±0.5%
NTS

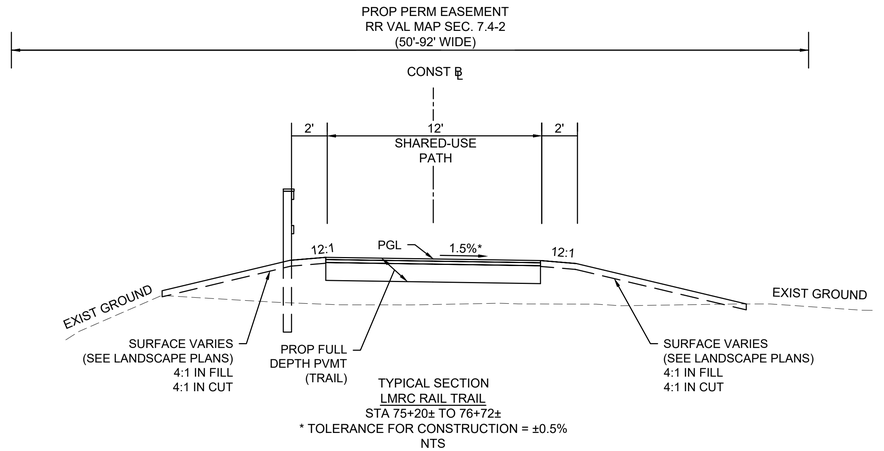

TYPICAL SECTION
LMRC RAIL TRAIL
STA 75+20± TO 76+72±
* TOLERANCE FOR CONSTRUCTION = ±0.5%
NTS

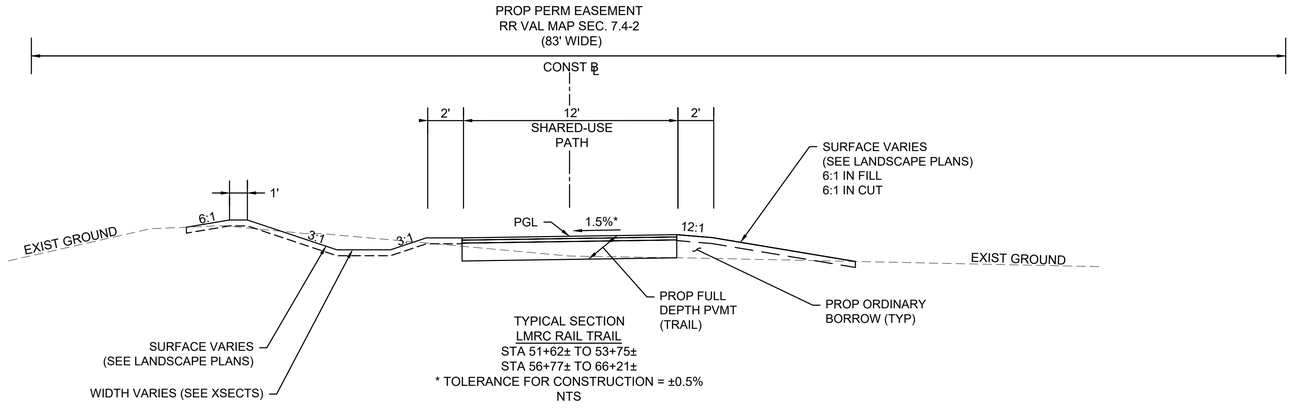

TYPICAL SECTION
LMRC RAIL TRAIL
STA 51+62± TO 53+75±
STA 56+77± TO 66+21±
* TOLERANCE FOR CONSTRUCTION = ±0.5%
NTS

GENERAL PAVEMENT NOTES:

1. ASPHALT EMULSION FOR TACK COAT SHALL BE APPLIED BETWEEN ALL ASPHALT SURFACES AND SAWCUT JOINTS BEFORE PAVING. HMA JOINT ADHESIVE SHALL BE APPLIED TO ALL COLD JOINTS (LONGITUDINAL AND TRANSVERSE) BEFORE PAVING SURFACE COURSE. ASPHALT EMULSION FOR TACK COAT SHALL BE APPLIED IN ACCORDANCE WITH SUBSECTION 450.43. ALL SURFACES SHALL BE CLEAN OF ALL ORGANICS, DEBRIS, AND SAND PRIOR TO PAVING.
2. ALL HMA SHALL BE IN ACCORDANCE WITH SECTION 450.
3. HMA FOR WALKS AND DRIVEWAYS SHALL BE IN ACCORDANCE WITH SECTION 700.
4. ALL GRAVEL BORROW MEETING SPECIFICATION DETERMINED BY THE ENGINEER SHALL BE RETAINED IN PLACE, COMPACTED, AND LEVELED WITH GRAVEL BORROW TYPE b AS REQUIRED.
5. TOTAL DEPTH OF PROPOSED PAVEMENT IN PERMANENT TRENCH PATCH SHALL BE 8.25" OR SHALL MATCH THE EXISTING PAVEMENT DEPTH, WHICHEVER DEPTH IS DEEPER.

LAWRENCE
LMRC RAIL TRAIL

STATE	FED. AID PROJ. NO.	SHEET NO.	TOTAL SHEETS
MA	CMQ-003S(733)X	7	245
PROJECT FILE NO.	608930		

TYPICAL SECTIONS AND PAVEMENT NOTES - 3 OF 4

608930_HD4(TYPICAL SECTIONS).DWG Plotted on 6-Sep-2024 9:37 AM

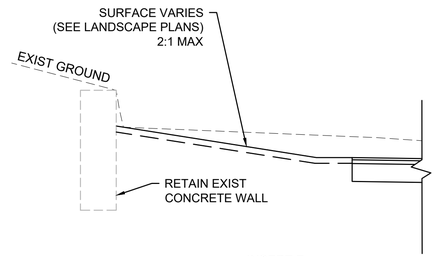

INSERT E
STA 304+15± TO 306+20±
* TOLERANCE FOR CONSTRUCTION ±0.5%
NTS

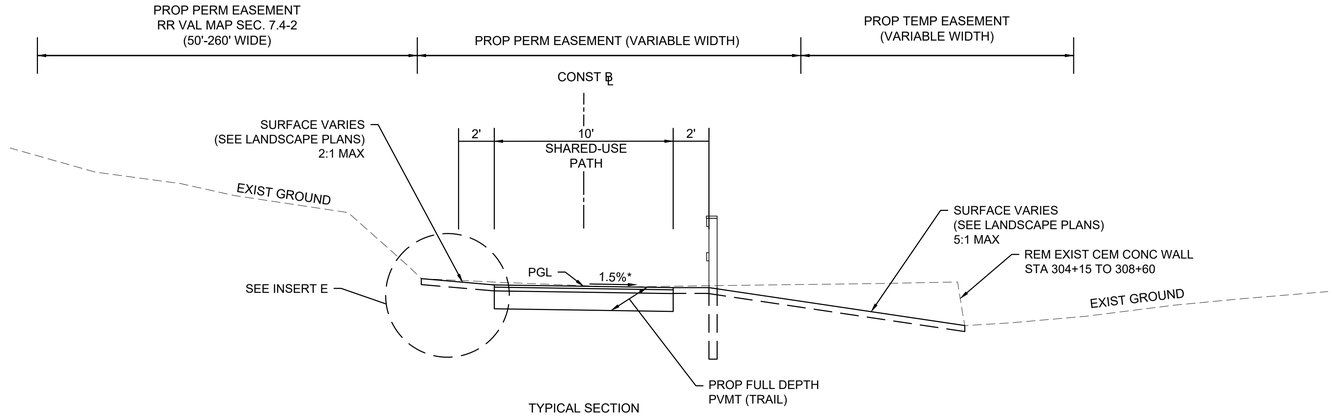

TYPICAL SECTION
SPICKET RIVER GREENWAY
STA 304+15± TO 308+60±
* TOLERANCE FOR CONSTRUCTION = ±0.5%
NTS

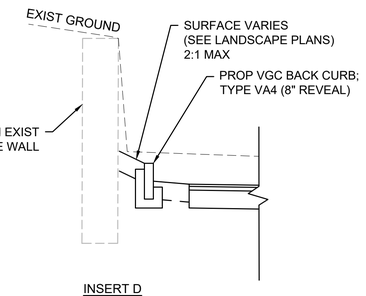

INSERT D
STA 302+63± TO 304+13±
* TOLERANCE FOR CONSTRUCTION ±0.5%
NTS

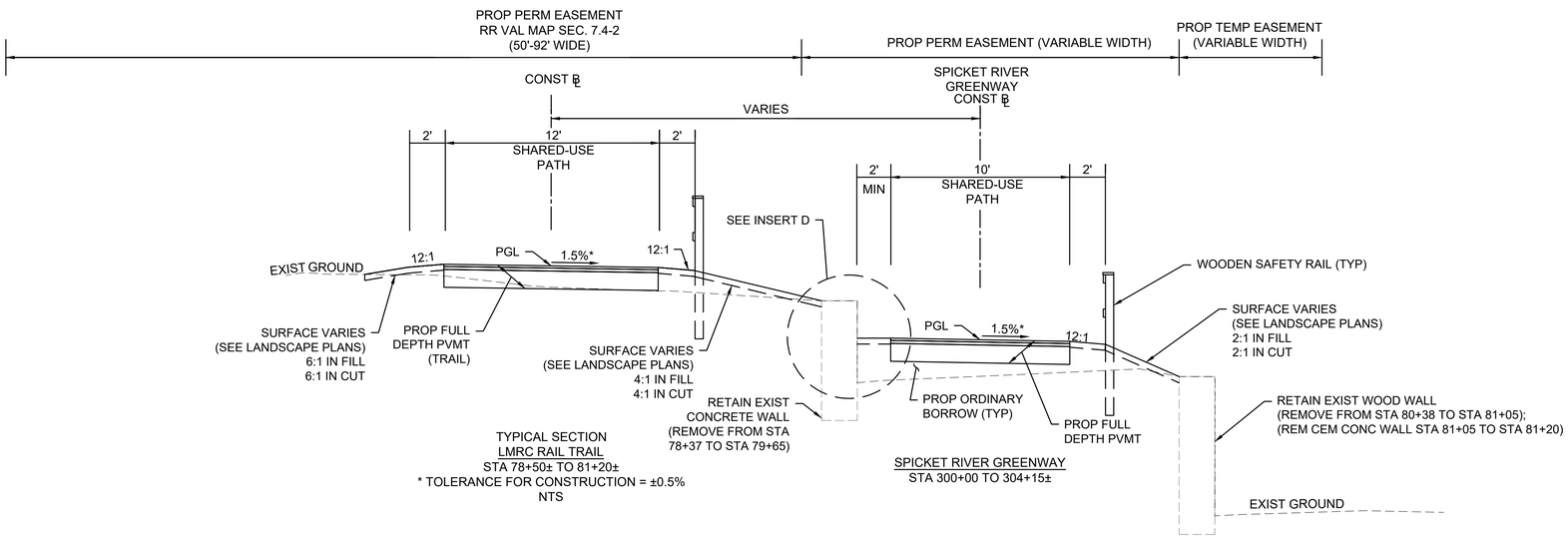

TYPICAL SECTION
LMRC RAIL TRAIL
STA 78+50± TO 81+20±
* TOLERANCE FOR CONSTRUCTION = ±0.5%
NTS

SPICKET RIVER GREENWAY
STA 300+00 TO 304+15±

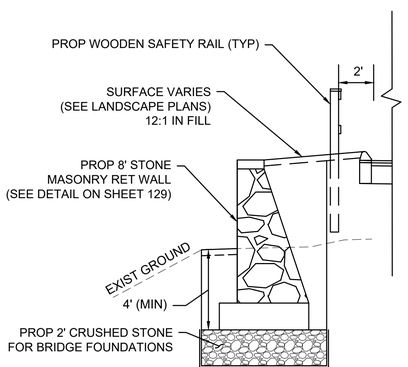

INSERT C
STA 74+45± TO 75+20±
* TOLERANCE FOR CONSTRUCTION ±0.5%
NTS

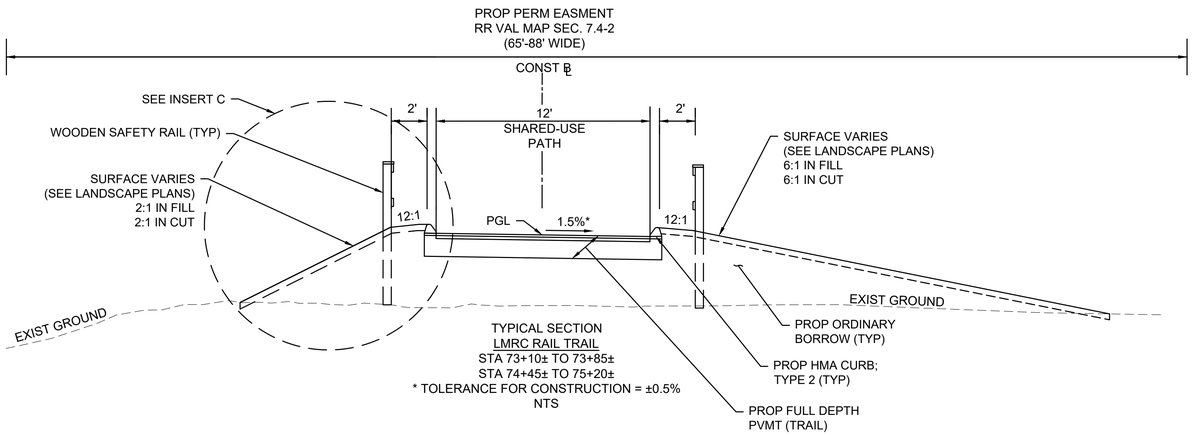

TYPICAL SECTION
LMRC RAIL TRAIL
STA 73+10± TO 73+85±
STA 74+45± TO 75+20±
* TOLERANCE FOR CONSTRUCTION = ±0.5%
NTS

LAWRENCE
LMRC RAIL TRAIL

STATE	FED. AID PROJ. NO.	SHEET NO.	TOTAL SHEETS
MA	CMQ-003S(733)X	8	245
PROJECT FILE NO.	608930		

TYPICAL SECTIONS AND PAVEMENT NOTES - 4 OF 4

608930_HD4(TYPICAL SECTIONS).DWG Plotted on 6-Sep-2024 8:11 PM

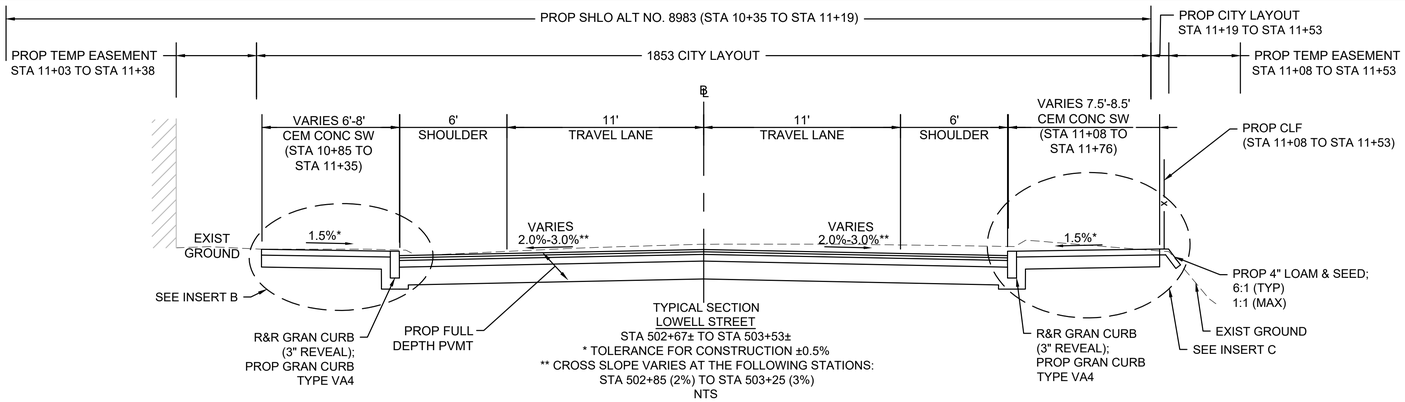

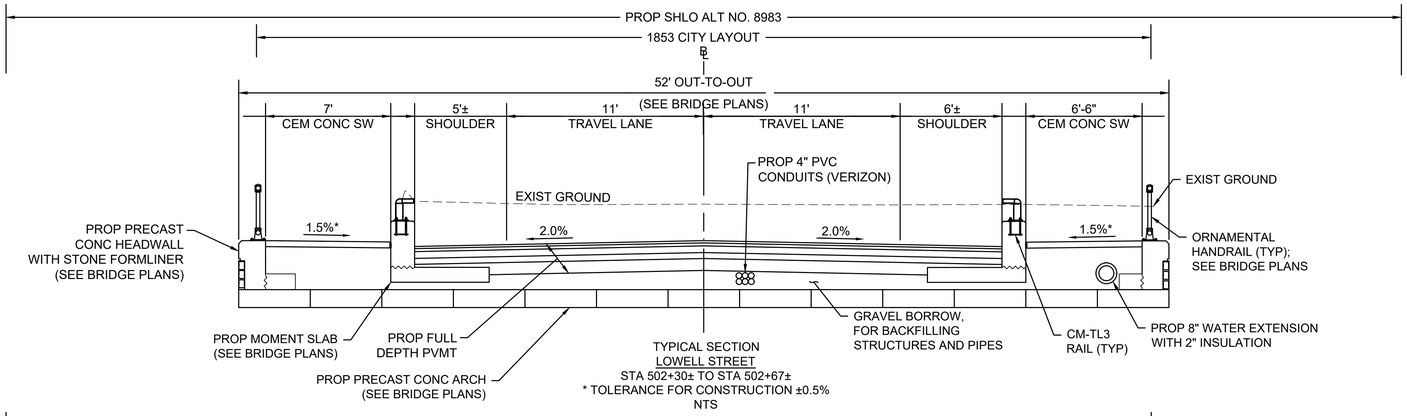

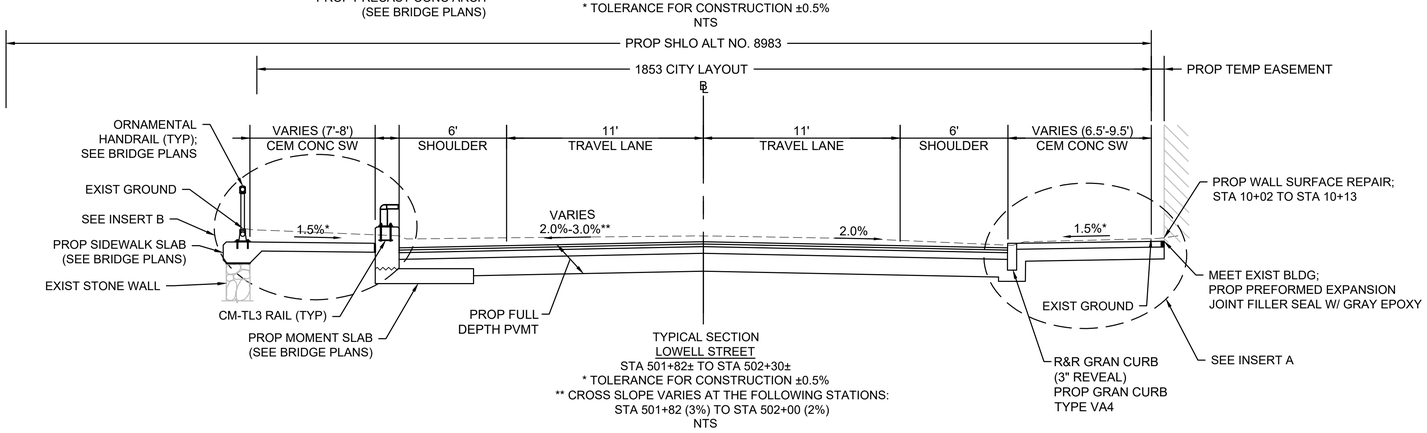

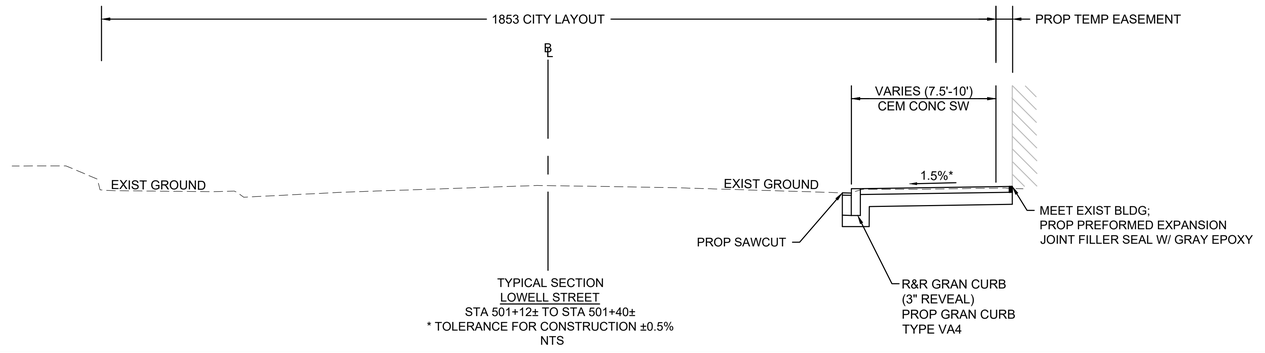

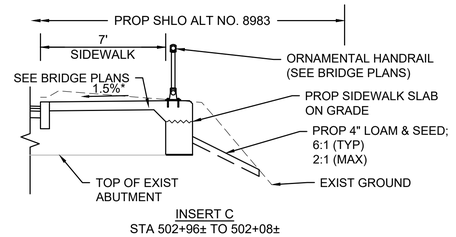

INSERT C
STA 502+96± TO 502+08±

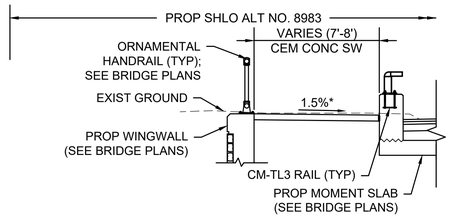

INSERT B
STA 502+07± TO 502+30±
STA 502+67± TO 502+78±

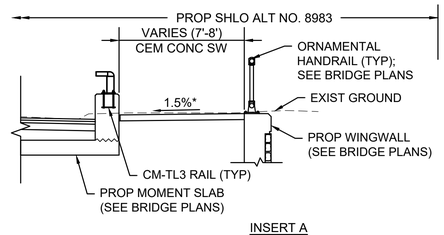

INSERT A
STA 502+13± TO 502+30±
STA 502+67± TO 502+96±

HIGHWAY GUARD DETAILS

NONE

TRAFFIC SIGNAL CONDUIT

NONE

WATER SUPPLY ALTERATIONS

NONE

DRAINAGE DETAILS

NONE

LAWRENCE
LMRC RAIL TRAIL

STATE	FED. AID PROJ. NO.	SHEET NO.	TOTAL SHEETS
MA	CMQ-003S(733)X	9	245
PROJECT FILE NO.	608930		

CONSTRUCTION PLANS - 1 OF 16

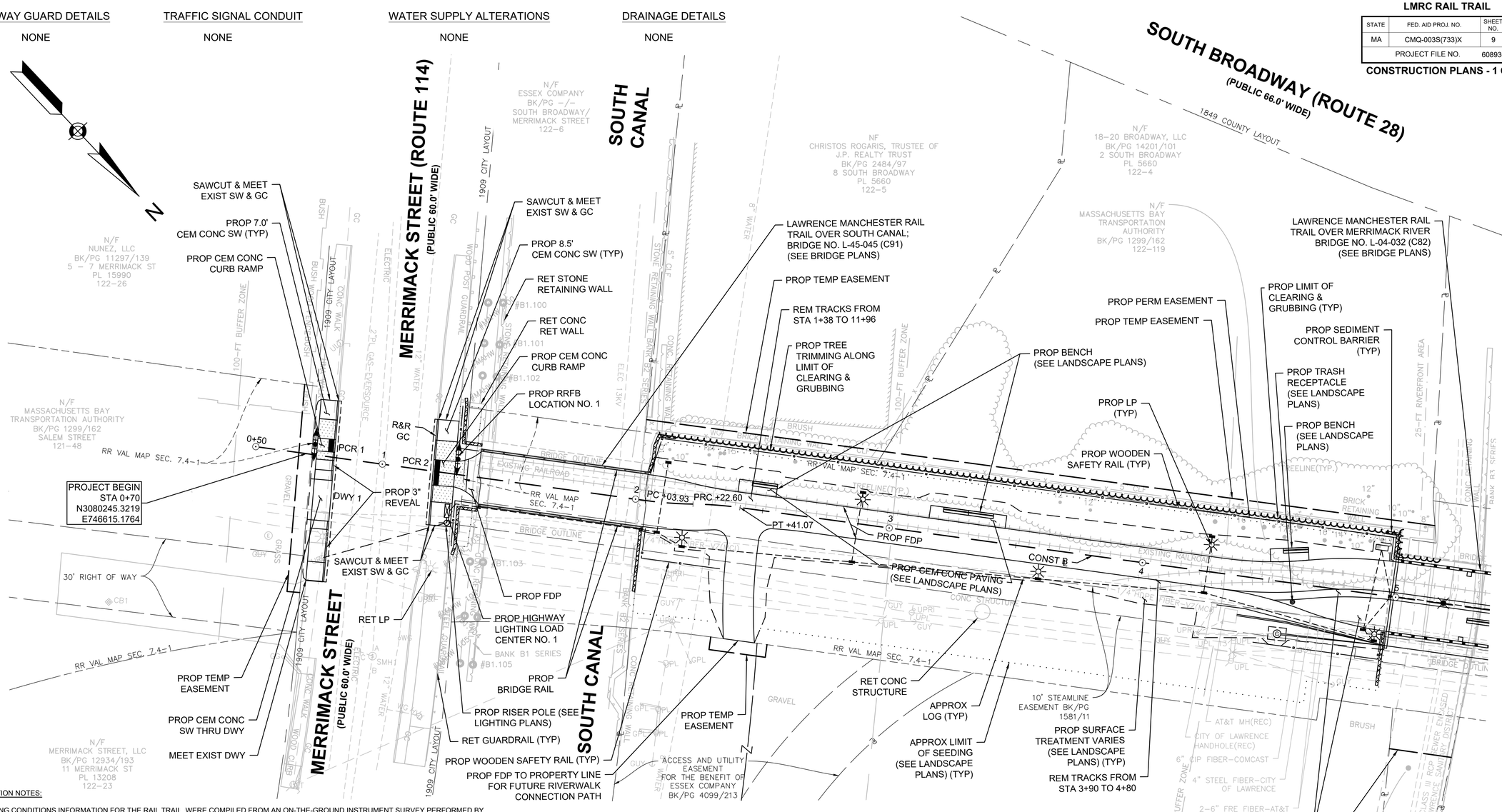

CONSTRUCTION NOTES:

1. EXISTING CONDITIONS INFORMATION FOR THE RAIL TRAIL WERE COMPILED FROM AN ON-THE-GROUND INSTRUMENT SURVEY PERFORMED BY GREENMAN-PEDERSON, INC. IN JANUARY & FEBRUARY, 2017 AND SUPPLEMENTED IN JANUARY, 2022.

   EXISTING CONDITIONS INFORMATION FOR THE LOWELL STREET BIRDGE WERE COMPILED FROM AN ON-THE-GROUND INSTRUMENT SURVEY PERFORMED BY GREENMAN-PEDERSON, INC. IN JULY, 2018 AND SUPPLEMENTED IN DECEMBER, 2021.

   HORIZONTAL DATUM = NAD83 (MASSACHUSETTS STATE PLANE COORDINATES)
   VERTICAL DATUM = NAVD88

2. ALL EXISTING STATE, COUNTY, AND TOWN LOCATION LINES HAVE BEEN ESTABLISHED FROM AN ACTUAL ON-THE-GROUND SURVEY. ALL PRIVATE PROPERTY LINES HAVE BEEN ESTABLISHED FROM AVAILABLE INFORMATION AND THEIR EXACT LOCATION ARE NOT GUARANTEED.

3. THE LOCATIONS OF EXISTING UNDERGROUND UTILITIES ARE SHOWN IN AN APPROXIMATE WAY ONLY AND HAVE NOT BEEN INDEPENDENTLY VERIFIED BY THE OWNER OR ITS REPRESENTATIVE. THE CONTRACTOR SHALL CONTACT DIGSAFE (1-888-DIGSAFE) A MINIMUM OF 72 BUSINESS HOURS PRIOR TO ANY CONSTRUCTION TO VERIFY THE LOCATION OF ALL EXISTING UTILITIES BEFORE COMMENCING WORK, AND SHALL BE FULLY RESPONSIBLE FOR ANY AND ALL DAMAGES WHICH MIGHT BE OCCASIONED BY THE CONTRACTOR'S FAILURE TO LOCATE AND PRESERVE ANY AND ALL UNDERGROUND UTILITIES.

4. WHERE AN EXISTING UTILITY IS FOUND TO CONFLICT WITH THE PROPOSED WORK, THE LOCATION, ELEVATION AND SIZE OF THE UTILITY SHALL BE ACCURATELY DETERMINED WITHOUT DELAY BY THE CONTRACTOR, AND THE INFORMATION FURNISHED TO THE ENGINEER FOR RESOLUTION OF THE CONFLICT.

5. ALL MUNICIPALLY OWNED UTILITY STRUCTURES (CATCH BASINS, DRAIN MANHOLES, ELECTRIC MANHOLES, ELECTRIC HANDHOLES, PULL BOXES, WATER GATES, ETC.) SHALL BE ADJUSTED BY THE CONTRACTOR TO FINISHED GRADE UNLESS DIRECTED OTHERWISE. THE CONTRACTOR SHALL COORDINATE WITH THE LAWRENCE DEPARTMENT OF PUBLIC WORKS (LDPW) TO ALLOW FOR THE REPLACEMENT OF EXISTING UTILITY STRUCTURES IN POOR CONDITION. THESE REPLACEMENT UTILITY STRUCTURES TO BE PROVIDED AND INSTALLED BY THE DPW.

6. ALL PRIVATELY OWNED UTILITY STRUCTURES (GAS GATES, ELECTRIC /TELEPHONE MANHOLES, ETC.) SHALL BE ADJUSTED TO FINISHED GRADE BY THE PRIVATE UTILITY COMPANY, UNLESS DIRECTED OTHERWISE. THE CONTRACTOR SHALL COORDINATE WITH PRIVATE UTILITY COMPANIES FOR THE ALTERATION AND ADJUSTMENT, AS NECESSARY.

7. PROPOSED LATERAL DRAIN PIPES SHALL BE INSTALLED WITH A PITCH OF 1.0% (MINIMUM) UNLESS OTHERWISE NOTED OR DIRECTED.

8. AREAS OUTSIDE THE LIMITS OF PROPOSED WORK DISTURBED BY THE CONTRACTOR'S OPERATIONS SHALL BE RESTORED BY THE CONTRACTOR TO

9. ALL DISTURBED AREAS OUTSIDE THE CURBLINE SHALL BE STABILIZED WITH VARIOUS SURFACE TREATMENTS (SEE LANDSCAPE PLANS).

10. THE TERM "PROPOSED" (PROP) MEANS WORK TO BE CONSTRUCTED USING NEW MATERIALS OR, WHERE APPLICABLE, RE-USING EXISTING MATERIALS IDENTIFIED AS "REMOVE AND RESET" (R&R), AS APPROVED BY THE ENGINEER.

11. THE TERM "MEET EXIST" MEANS TO MEET BOTH THE EXISTING ALIGNMENT AND ELEVATION.

12. ALL EXISTING TREES WITHIN THE PROJECT LIMITS SHALL BE RETAINED AND PROTECTED WITH TREE PROTECTION UNLESS INDICATED OTHERWISE ON THE DRAWINGS. ALL PROVIDED DIMENSIONS REFER TO THE DIAMETER AT BREAST HEIGHT.

13. AN UNOBSTRUCTED PATH OF TRAVEL WITH A MINIMUM WIDTH OF 3'-0" (EXCLUDING THE WIDTH OF CURB) SHALL BE MAINTAINED PAST ALL OBSTRUCTIONS (UTILITY POLES, LIGHT POLES, SIGNS, MAILBOXES, ALONG DRIVEWAY OPENINGS, ETC.)

14. ALL RAILROAD TRACKS AND TIMBER SHALL BE REMOVED WITHIN PROJECT LIMITS.

15. DETECTABLE WARNING PANELS ARE REQUIRED ON ALL PROPOSED PEDESTRIAN CURB RAMPS AND SHALL BE INSTALLED IN ACCORDANCE WITH MASSDOT CONSTRUCTION STANDARDS.

16. LMRC RAIL TRAIL A AND LMRC TRAIL B CONSTRUCTION BASELINES DO NOT HAVE CONTINUOUS STATIONING.

17. EXISTING OR PROPOSED STRUCTURES TO BE ADJUSTED WITHIN PEDESTRIAN CURB RAMPS SHALL BE CAREFULLY ADJUSTED SUCH THAT THE TOPMOST SURFACE OR STRUCTURE COVER SHALL BE FLUSH WITH THE FINAL PEDESTRIAN CURB RAMP SURFACE.

18. EXISTING PRIVATE FENCES WITHIN THE LEASED MBTA PROPERTY SHALL BE REMOVED AND STACKED UNLESS INDICATED OTHERWISE ON THE DRAWINGS. FENCES NOT REQUIRED TO BE RESET OR STACKED WILL BECOME THE PROPERTY OF CONTRACTOR AND SHALL BE REMOVED AND PROPERLY DISCARDED BY THE CONTRACTOR.

19. IN AREAS OF PROPOSED 12" EXCAVATION OR EXISTING ROADWAY / SIDEWALK WHERE LOAM AND SEED IS PROPOSED, THE CONTRACTOR SHALL REMOVE EXISTING ROADWAY / SIDEWALK AND SUBBASE, AND REPLACE WITH SUITABLE EXCAVATED MATERIAL OR ORDINARY BORROW TO MEET FINAL GRADE. THE PROPOSED SURFACE TREATMENT VARIES, SEE LANDSCAPE PLANS.

20. TEMPORARY CONSTRUCTION FENCE SHALL BE INSTALLED AS SHOWN ON THE TEMPORARY TRAFFIC CONTROL PLANS (SEE SHEET 65 FOR LOCATION) DURING DEMOLITION OF THE EXISTING BRIDGE AND PROPOSED BRIDGE CONSTRUCTION.

LEGEND

PCR # = PEDESTRIAN CURB RAMP NUMBER

DWY # = DRIVEWAY NUMBER

FOR PROFILE SEE SHEET NO. 25

0 20 50 100

SCALE: 1" = 20'

608930_HDS\CONSTRUCTION PLANS\.DWG Plotted on 6-Sep-2024 6:18 PM

LAWRENCE
LMRC RAIL TRAIL

STATE	FED. AID PROJ. NO.	SHEET NO.	TOTAL SHEETS
MA	CMQ-003S(733)X	10	245
	PROJECT FILE NO. 608930		

CONSTRUCTION PLANS - 2 OF 16

HIGHWAY GUARD DETAILS
NONE

TRAFFIC SIGNAL CONDUIT
NONE

WATER SUPPLY ALTERATIONS
NONE

DRAINAGE DETAILS
NONE

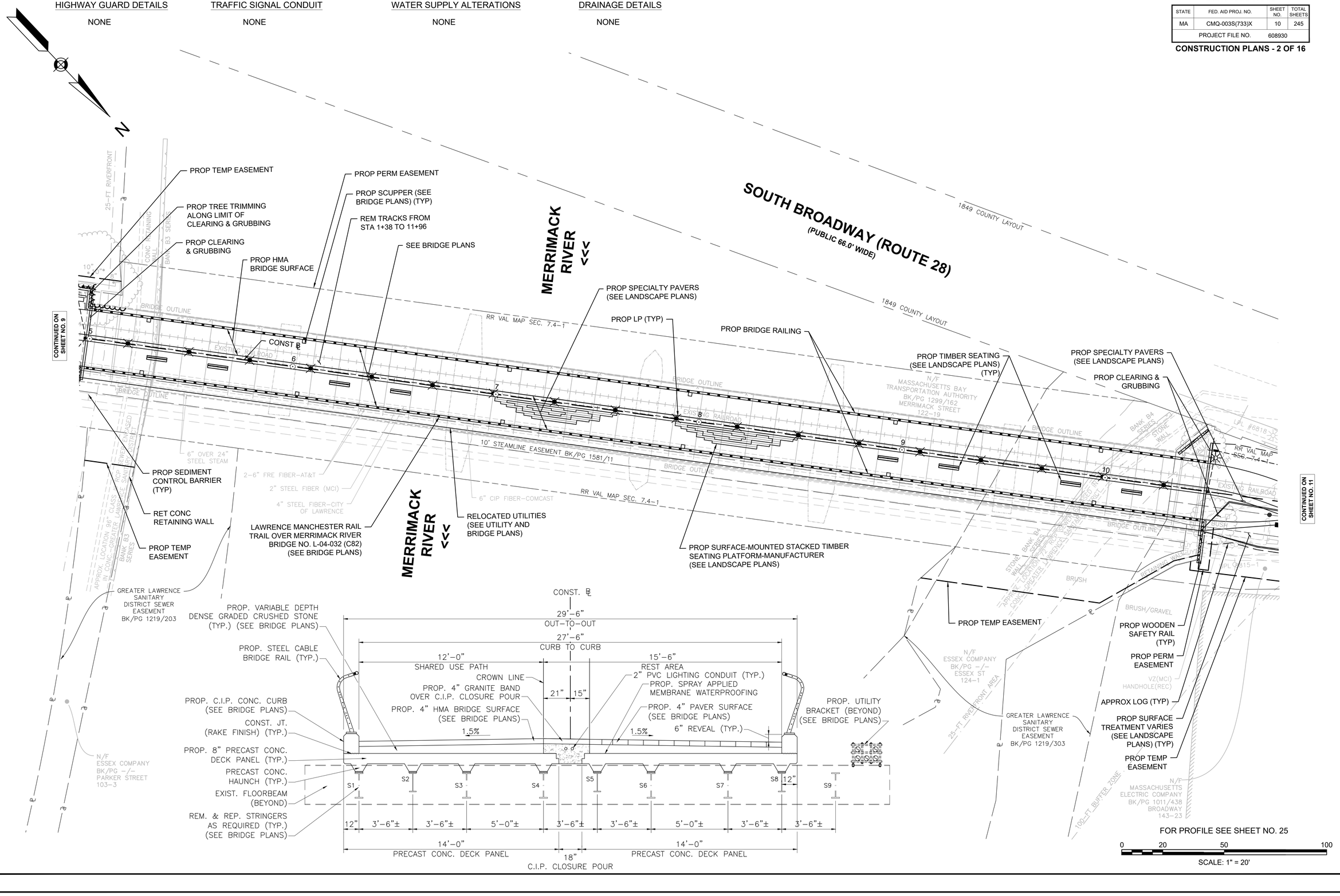

608930_HDS(CONSTRUCTION PLANS).DWG Plotted on 6-Sep-2024 6:19 PM

LAWRENCE
LMRC RAIL TRAIL

STATE	FED. AID PROJ. NO.	SHEET NO.	TOTAL SHEETS
MA	CMQ-003S(733)X	11	245
PROJECT FILE NO.	608930		

CONSTRUCTION PLANS - 3 OF 16

HIGHWAY GUARD DETAILS
NONE

TRAFFIC SIGNAL CONDUIT
SEE SHEET 58

WATER SUPPLY ALTERATIONS
NONE

DRAINAGE DETAILS
SEE SHEET 68

LEGEND
PCR # = PEDESTRIAN CURB RAMP NUMBER
DWY # = DRIVEWAY NUMBER

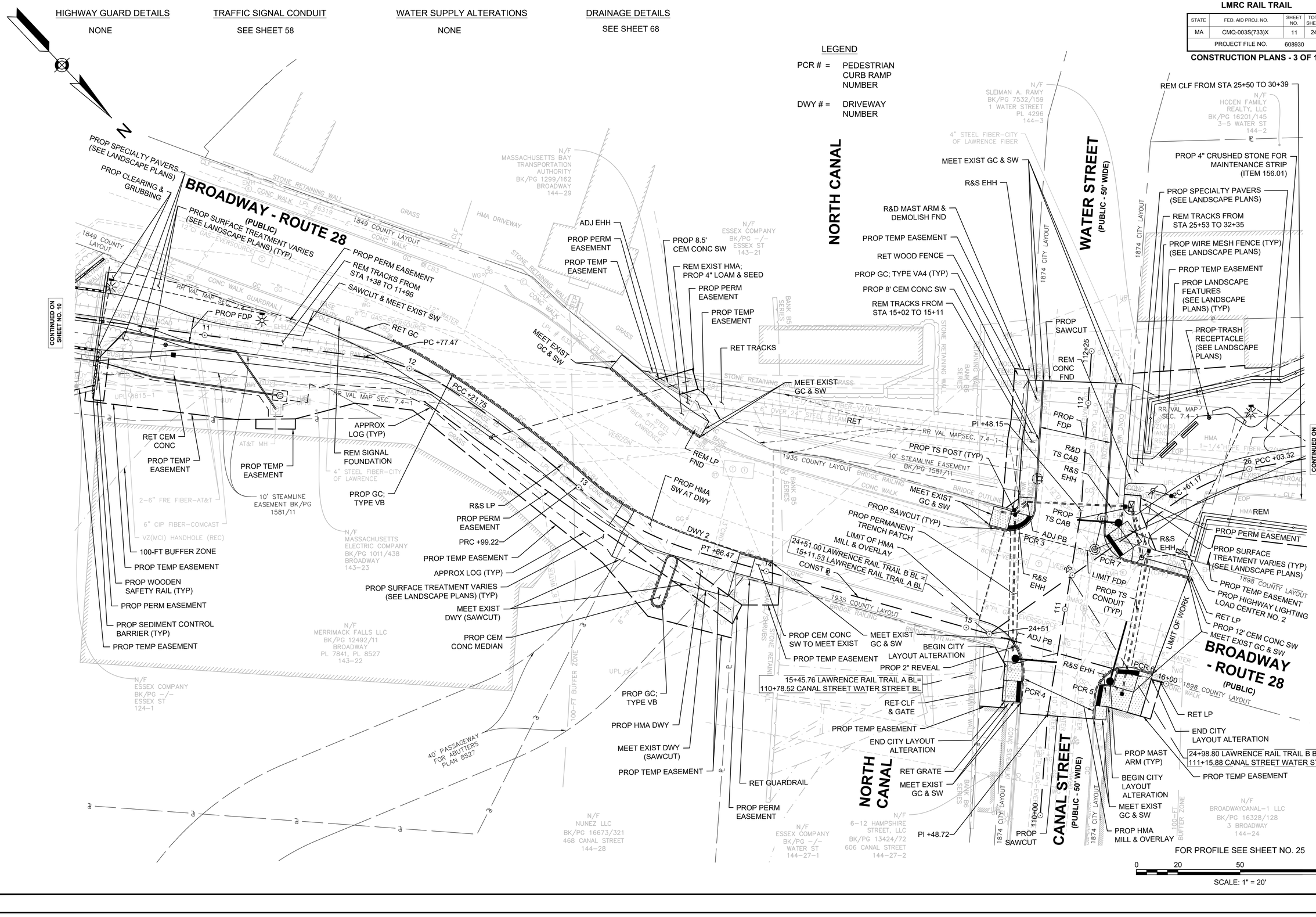

608930_HDS(CONSTRUCTION PLANS).DWG Plotted on 6-Sep-2024 6:19 PM

LAWRENCE
LMRC RAIL TRAIL

STATE	FED. AID PROJ. NO.	SHEET NO.	TOTAL SHEETS
MA	CMQ-003S(733)X	12	245
	PROJECT FILE NO. 608930		

CONSTRUCTION PLANS - 4 OF 16

608930_HDS(CONSTRUCTION PLANS).DWG Plotted on 6-Sep-2024 6:20 PM

HIGHWAY GUARD DETAILS

STA 27+62 LT TO STA 32+61 LT WOOD RAIL FENCE W/ GUARDRAIL

TRAFFIC SIGNAL CONDUIT

NONE

WATER SUPPLY ALTERATIONS

NONE

DRAINAGE DETAILS

SEE SHEET 69

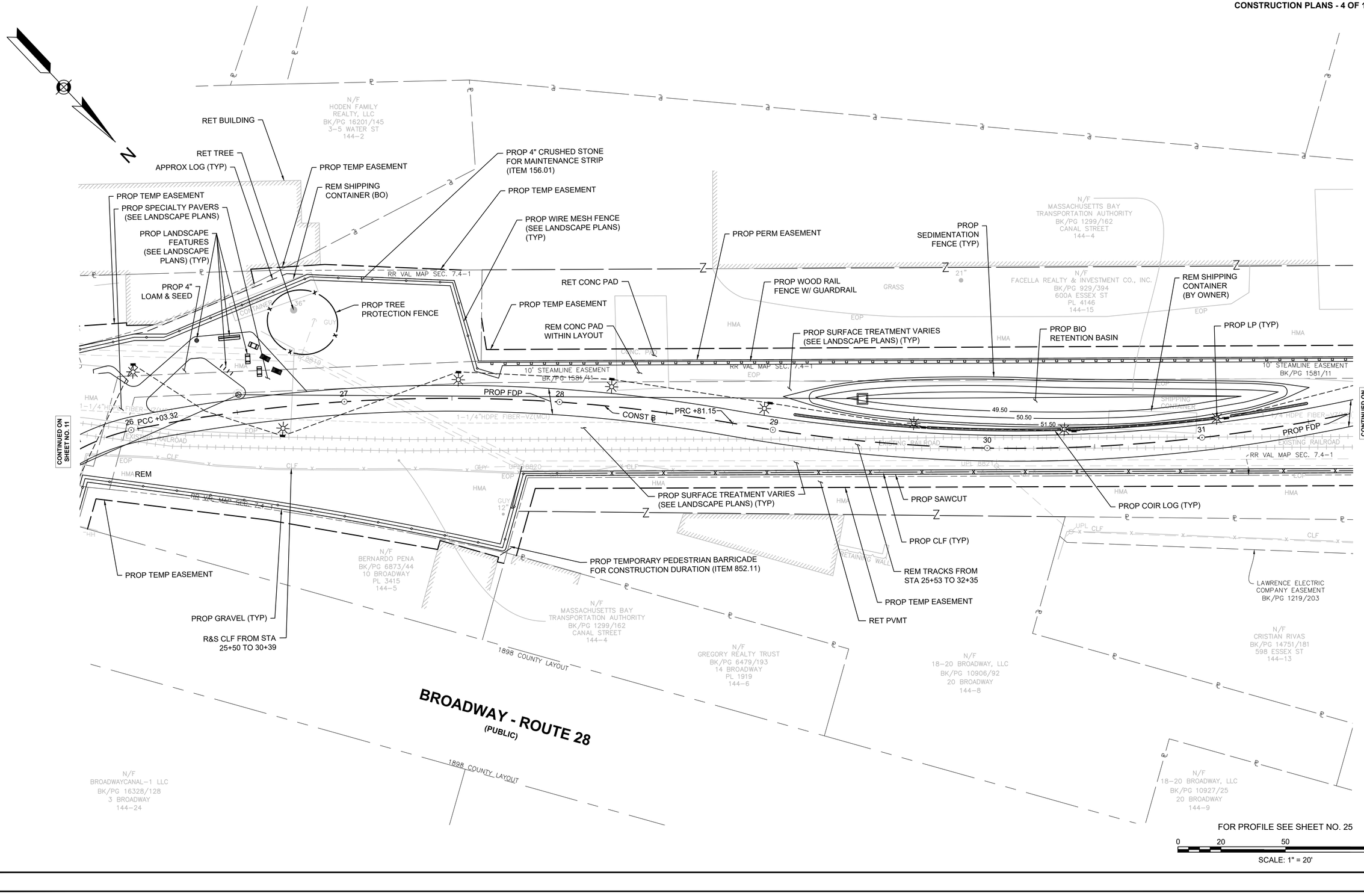

FOR PROFILE SEE SHEET NO. 25

0 20 50 100

SCALE: 1" = 20'

LAWRENCE
LMRC RAIL TRAIL

STATE	FED. AID PROJ. NO.	SHEET NO.	TOTAL SHEETS
MA	CMQ-003S(733)X	13	245
PROJECT FILE NO.	608930		

CONSTRUCTION PLANS - 5 OF 16

608930_HDS(CONSTRUCTION PLANS).DWG Plotted on 6-Sep-2024 6:20 PM

HIGHWAY GUARD DETAILS

STA 27+63 LT TO STA 32+61 LT WOOD RAIL FENCE W/ GUARDRAIL

TRAFFIC SIGNAL CONDUIT

NONE

WATER SUPPLY ALTERATIONS

NONE

DRAINAGE DETAILS

SEE SHEET 70

LEGEND

PCR # = PEDESTRIAN CURB RAMP NUMBER

DWY # = DRIVEWAY NUMBER

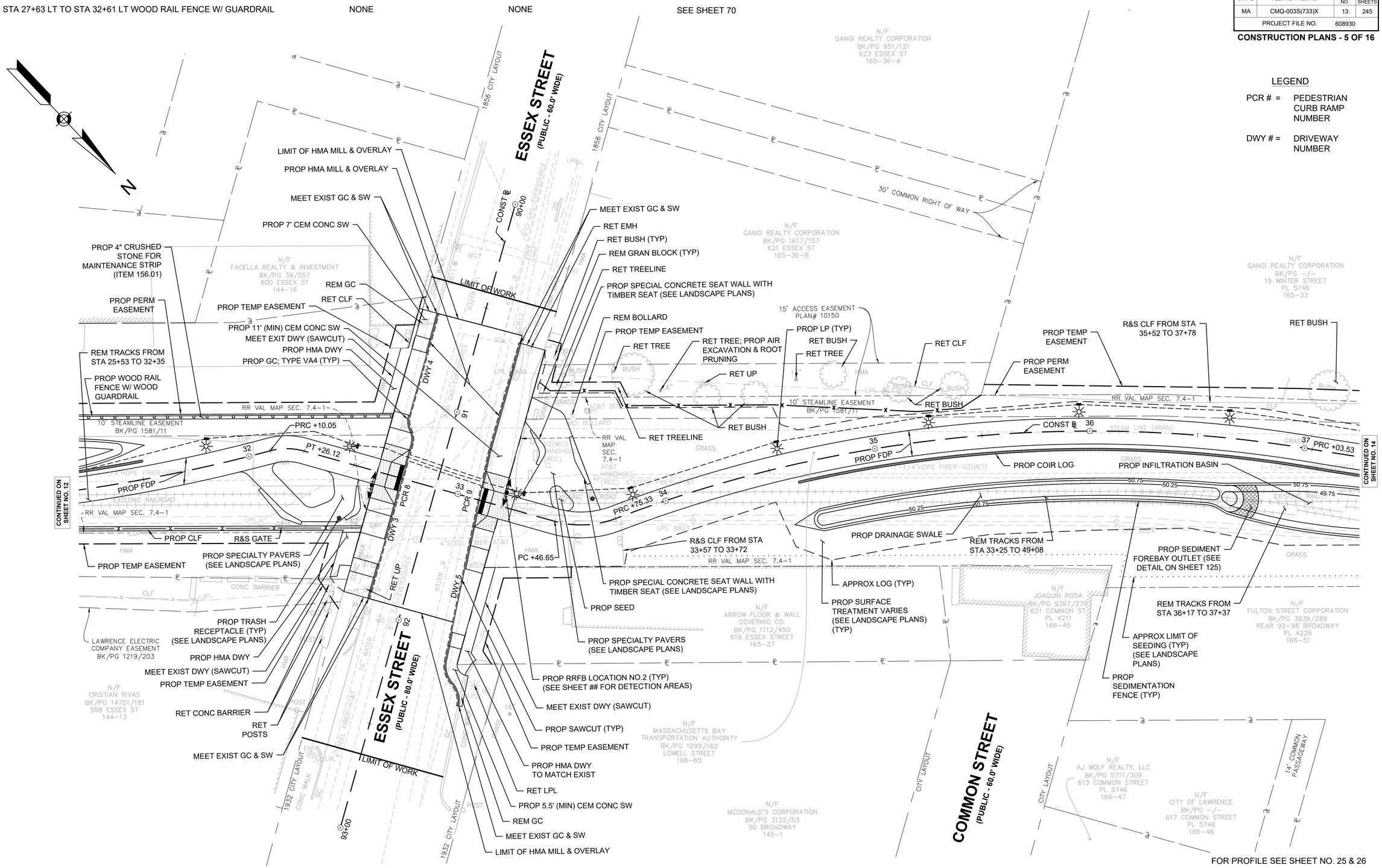

0 20 50 100

SCALE: 1" = 20'

LAWRENCE
LMRC RAIL TRAIL

STATE	FED. AID PROJ. NO.	SHEET NO.	TOTAL SHEETS
MA	CMQ-003S(733)X	14	245
PROJECT FILE NO.	608930		

CONSTRUCTION PLANS - 6 OF 16

608930_HDS\[CONSTRUCTION PLANS\].DWG Plotted on 6-Sep-2024 6:21 PM

HIGHWAY GUARD DETAILS
NONE

TRAFFIC SIGNAL CONDUIT
NONE

WATER SUPPLY ALTERATIONS
NONE

DRAINAGE DETAILS
SEE SHEET 71

LEGEND
= TEMPORARY WETLAND IMPACT
= PERMANENT WETLAND IMPACT

WINTER STREET (PUBLIC)
1877 CITY LAYOUT
LOWELL STREET (ABOVE) (PUBLIC - 50.0' WIDE)
1853 CITY LAYOUT
CONST @ 509
CONST @ 510
CONST @ 511
CONST @ 512
37 PRC +03.53
38
39
40
41
42
PT +74.17
CONST @
PROP FDP
PROPOSED PERMANENT WETLAND IMPACTS APPROX 1,779 SF
PROPOSED TEMPORARY WETLAND IMPACTS APPROX 6,360 SF
PROP WETLAND RESTORATION WITHIN LOG APPROX 560 SF
PROP WETLAND RESTORATION WITHIN LOG APPROX 360 SF
PROP WETLAND RESTORATION WITHIN LOG APPROX 406 SF
PROP WETLAND RESTORATION WITHIN LOG APPROX 386 SF
PROPOSED TEMPORARY WETLAND IMPACTS APPROX 2,259 SF
PROPOSED TEMPORARY WETLAND IMPACTS APPROX 2,153 SF
PROPOSED TEMPORARY WETLAND IMPACTS APPROX 11,849 SF
PROPOSED PERMANENT WETLAND IMPACTS APPROX 1,612 SF
LIMIT OF IVW RESOURCE AREA AS FLAGGED BY NOVER ARMSTRONG ON MARCH 10, 2017. (TYP.) (REVISED PER CONCOM DETERMINATION BASED UPON MAY 19, 2017 SITE WALK)
LIMIT OF IVW RESOURCE AREA AS FLAGGED BY NOVER ARMSTRONG ON MARCH 10, 2017. (TYP.) (REVISED PER CONCOM DETERMINATION BASED UPON MAY 19, 2017 SITE WALK)
14' COMMON PASSAGEWAY BK/PG 1577/189
14' COMMON PASSAGEWAY
10' STEAMLINE EASEMENT BK/PG 1581/11
MASSDOT BRIDGE EASEMENT BK/PG 1280/493
3' MAINTAINENCE EASEMENT TO BENEFIT ABUTTER BK/PG 3036/317
TO BENEFIT ABUTTER ENCROACHMENT EASEMENT BK/PG 3036/317
PROP LP (TYP)
RR VAL MAP SEC. 7.4-1
PROP PERM EASEMENT
RET TRACKS OUTSIDE LIMITS OF WORK
LOWELL STREET OVER MBTA RAILROAD; BRIDGE NO. L-04-027(32F) (SEE BRIDGE PLANS & SHEET 24)
41+15.40 LAWRENCE RAIL TRAIL B BL= 510+49.07 LOWELL STREET BL
R&S CLF FROM STA 35+52 TO 37+78
LIMIT OF CLEARING & GRUBBING (TYP)
RET CLF FROM STA 37+78 TO 38+00
PROP TEMP EASEMENT
RET BUSH
R&S CLF FROM STA 38+00 TO 39+74
PROP TEMP EASEMENT
REM TRACKS FROM STA 33+25 TO 49+08
PROP SEDIMENT CONTROL BARRIER (TYP)
RET CLF
RET TREE
RET BUSH
PROP SEDIMENT FOREBAY OUTLET (SEE DETAIL ON SHEET 125)
PROP DRAINAGE SWALE
PROP INFILTRATION BASIN
APPROX LOG (TYP)
PROP SURFACE TREATMENT VARIES (SEE LANDSCAPE PLANS) (TYP)
REM TRACKS FROM STA 36+17 TO 37+37
APPROX LIMIT OF SEEDING (TYP) (SEE LANDSCAPE PLANS)
PROP STONE CHECK DAM (TYP)
PROP SEDIMENTATION FENCE (TYP)
REM TRACKS FROM STA 38+67 TO 39+68
PROP 1' EARTHEN BERM
RET TREE
RET TRACKS OUTSIDE LIMITS OF WORK
N/F GANGI REALTY CORPORATION BK/PG -/- 19 WINTER STREET PL 5746 165-33
N/F THE 620 ESSEX STREET LLC BK/PG 14245/39 27 WINTER STREET PL 15028 166-70
N/F MERRIMACK STREET LLC BK/PG 15698/44 33-37 WINTER STREET 166-69
N/F WILLIAM J. MATTHES, JR. 1881/213 292 LOWELL ST 166-66
N/F ZACHARY MACARO BK/PG 11843/318 285 LOWELL ST PL 1011 166-30
N/F 436 SOUTH UNION REALTY TRUST BK/PG 16629/144 291 LOWELL ST PL 1011 166-29
N/F FULTON STREET CORPORATION BK/PG 3936/289 REAR 92-98 BROADWAY PL 4226 166-51
N/F CITY OF LAWRENCE BK/PG -/- 617 COMMON STREET PL 5746 166-46
N/F MASSACHUSETTS BAY TRANSPORTATION AUTHORITY BK/PG 1299/162 LOWELL STREET 166-65
N/F FULTON STREET CORPORATION BK/PG 3936/289 REAR 617 COMMON STREET 166-58
N/F DAVID A. BIDER & SYLVIA M. BIDER BK/PG 3161/316 278 LOWELL ST PL 7005 166-64
N/F DAVID A. BIDER & SYLVIA M. BIDER BK/PG 3161/316 274-276 LOWELL ST 166-63
N/F THE 290 LOWELL STREET REALTY TRUST BK/PG 4694/65 270-272 LOWELL ST 166-62
N/F 283 LOWELL STREET LAWRENCE, LLC BK/PG 12763/126 283 LOWELL ST 166-31
CONTINUED ON SHEET NO. 13
CONTINUED ON SHEET NO. 15
FOR PROFILE SEE SHEET NO. 26
0 20 50 100
SCALE: 1" = 20'

LAWRENCE
LMRC RAIL TRAIL

STATE	FED. AID PROJ. NO.	SHEET NO.	TOTAL SHEETS
MA	CMQ-003S(733)X	15	245
	PROJECT FILE NO. 608930		

CONSTRUCTION PLANS - 7 OF 16

608930_HDS(CONSTRUCTION PLANS).DWG Plotted on 6-Sep-2024 6:22 PM

HIGHWAY GUARD DETAILS
NONE

TRAFFIC SIGNAL CONDUIT
NONE

WATER SUPPLY ALTERATIONS
NONE

DRAINAGE DETAILS
SEE SHEET 72

LEGEND
= TEMPORARY WETLAND IMPACT
= PERMANENT WETLAND IMPACT
= WETLAND REPLICATION

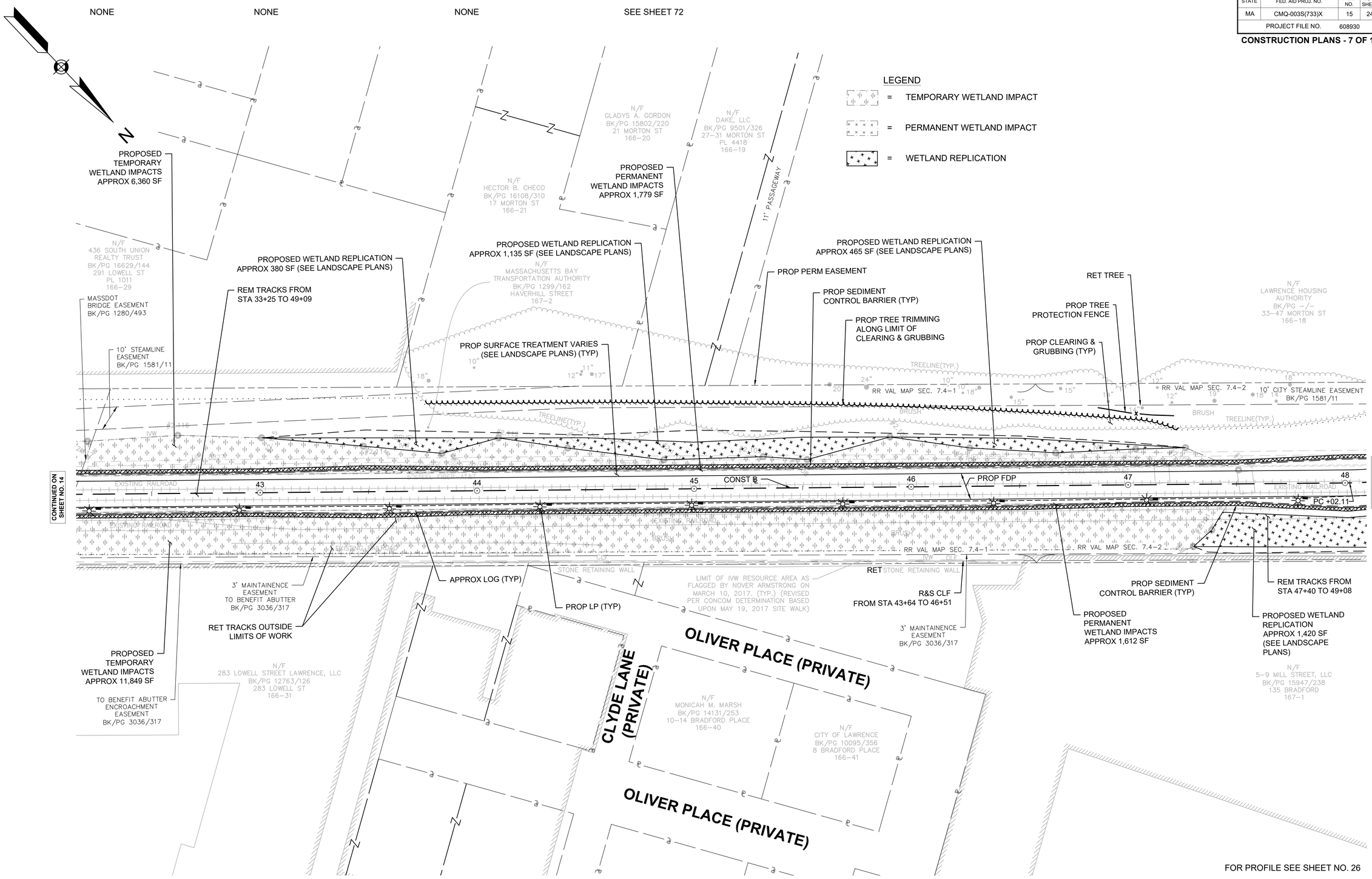

FOR PROFILE SEE SHEET NO. 26

0 20 50 100
SCALE: 1" = 20'

HIGHWAY GUARD DETAILS

NONE

TRAFFIC SIGNAL CONDUIT

NONE

WATER SUPPLY ALTERATIONS

NONE

DRAINAGE DETAILS

SEE SHEET 73

LAWRENCE
LMRC RAIL TRAIL

STATE	FED. AID PROJ. NO.	SHEET NO.	TOTAL SHEETS
MA	CMQ-003S(733)X	16	245
	PROJECT FILE NO. 608930		

CONSTRUCTION PLANS - 8 OF 16

608930_HDS\CONSTRUCTION PLANS\.DWG Plotted on 6-Sep-2024 6:22 PM

LEGEND

PCR # = PEDESTRIAN CURB RAMP NUMBER

DWY # = DRIVEWAY NUMBER

= WETLAND REPLICATION

MORTON STREET
(PUBLIC - 50.0' WIDE)

HAVERHILL STREET - ROUTE 110
(PUBLIC - 50.0' WIDE)

49+43.93 LAWRENCE RAIL TRAIL B BL=
101+09.37 HAVERHILL STREET BL

CONTINUED ON SHEET NO. 15

CONTINUED ON SHEET NO. 17

FOR PROFILE SEE SHEET NO. 26

0 20 50 100

SCALE: 1" = 20'

LAWRENCE
LMRC RAIL TRAIL

STATE	FED. AID PROJ. NO.	SHEET NO.	TOTAL SHEETS
MA	CMQ-003S(733)X	17	245
PROJECT FILE NO.	608930		

CONSTRUCTION PLANS - 9 OF 16

608930_HDS(CONSTRUCTION PLANS).DWG Plotted on 6-Sep-2024 6:23 PM

HIGHWAY GUARD DETAILS

NONE

TRAFFIC SIGNAL CONDUIT

NONE

WATER SUPPLY ALTERATIONS

NONE

DRAINAGE DETAILS

SEE SHEET 74

LEGEND

PCR # = PEDESTRIAN CURB RAMP NUMBER

DWY # = DRIVEWAY NUMBER

RAILROAD STREET
(PUBLIC)

CONTINUED ON SHEET NO. 16

CONTINUED ON SHEET NO. 18

FOR PROFILE SEE SHEET NO. 26

0 20 50 100

SCALE: 1" = 20'

HIGHWAY GUARD DETAILS

NONE

TRAFFIC SIGNAL CONDUIT

NONE

WATER SUPPLY ALTERATIONS

NONE

DRAINAGE DETAILS

SEE SHEET 75

LAWRENCE
LMRC RAIL TRAIL

STATE	FED. AID PROJ. NO.	SHEET NO.	TOTAL SHEETS
MA	CMQ-003S(733)X	18	245
PROJECT FILE NO.	608930		

CONSTRUCTION PLANS - 10 OF 16

608930_HDS(CONSTRUCTION PLANS).DWG Plotted on 6-Sep-2024 6:23 PM

RAILROAD STREET
(PUBLIC)

CITY LAYOUT

N/F JACQUES OUELLET & LOUISE OUELLET BK/PG 1341/440 55 RAILROAD ST 189–46

N/F JOHN SHEA CO BK/PG –/– RAILROAD STREET 189–44

N/F 57–71 RAILROAD STREET CONDOMINIUM MASTER DEED BK/PG 3301/42 57–71 RAILROAD STREET 189–1

N/F SOKIA PHY & SOPHORN PHY MASTER DEED BK/PG 15225/303 73–75 RAILROAD STREET 190–10

N/F MASSACHUSETTS BAY TRANSPORTATION AUTHORITY BK/PG 1299/162 MERRIMACK STREET 212–24

N/F OBIPIO ORTEGA GONZALES & LOURDES ORTEGA BK/PG 16437/50 81 RAILROAD ST 190–8

N/F JOSHUA V. ARIAS BK/PG 12921/222 83–87 RAILROAD ST 190–7

N/F HECTOR R. CID & ALTAGRACIA CID BK/PG 13837/207 89 RAILROAD ST 190–6

N/F MARIA VENTURA BK/PG 11988/44 91–93 RAILROAD ST 190–5

N/F HUDELSE O PERALTA BK/PG 15321/282 97 RAILROAD ST 190–4

N/F LUZ M. ANDUJAR & CRITIAN MANUEL GARCIA BK/PG 10051/321 97 ½ RAILROAD ST 190–3–2

PROP TEMP EASEMENT

PROP TREE TRIMMING ALONG LIMIT OF CLEARING & GRUBBING

RET TREES

PROP TEMP EASEMENT

PROP BIO RETENTION BASIN

PROP TEMP EASEMENT

PROP BIO RETENTION BASIN

REM TRACKS FROM STA 49+88 TO 73+70

PROP BIO RETENTION BASIN

PROP TREE TRIMMING ALONG LIMIT OF CLEARING & GRUBBING

PROP PERM EASEMENT

PROP CLEARING & GRUBBING

UPGRADE UPL IN PLACE (BO)

RET TREE; PROP TREE PROTECTION (TYP)

RR VAL MAP SEC. 7.4–2

10' STEAMLINE EASEMENT BK/PG 1581/11

RET BOLLARD

PROP BIO RETENTION BASIN

R&R BOLLARD IN PLACE (BO)

PROP LP (TYP)

PROP FDP

PROP SEDIMENTATION FENCE (TYP)

RET CLF

RET TRACKS OUTSIDE LIMIT OF GRADING

R&S CLF STA 57+70 TO 61+56

PROP TREE TRIMMING ALONG LIMIT OF CLEARING & GRUBBING

APPROX LIMIT OF SEEDING (TYP) (SEE LANDSCAPE PLANS)

PROP SURFACE TREATMENT VARIES (SEE LANDSCAPE PLANS) (TYP)

PROP TEMP EASEMENT

PROP STONE FOR PIPE ENDS

PROP CLEARING & GRUBBING

PROP TEMP EASEMENT

REM TREES

RET TREE

REM TRACKS FROM STA 58+77 TO 70+07

PROP STONE FOR PIPE ENDS

REM TREE

RET TREES

REM TREE

REM TREE

PROP TEMP EASEMENT

RET CLF

R&S CLF STA 62+18 TO 69+49

PROP WOODEN SAFETY RAIL

REM TREES

PROP TEMP EASEMENT

APPROX LOG (TYP)

PROP CLEARING & GRUBBING (TYP)

PROP TEMP EASEMENT

N/F 130–136 WEST STREET, LLC LCC NO 19576A CERT NO 15412 DOC NO 91700 WEST STREET MAP/LOT 190/15

N/F JE ENTERPRISE INC. BK/PG 15389/123 142 WEST STREET 190–17

N/F CITY OF LAWRENCE (C/O LAWRENCE DPW) BK/PG 581/323 BK/PG 650/548 WEST STREET 190–18

HUBBARD PLACE (PUBLIC)

1945 CITY LAYOUT

BOURGOIN SQUARE PARK

CONTINUED ON SHEET NO. 17

CONTINUED ON SHEET NO. 19

FOR PROFILE SEE SHEET NO. 27

0 20 50 100

SCALE: 1" = 20'

LAWRENCE
LMRC RAIL TRAIL

STATE	FED. AID PROJ. NO.	SHEET NO.	TOTAL SHEETS
MA	CMQ-003S(733)X	19	245
PROJECT FILE NO.	608930		

CONSTRUCTION PLANS - 11 OF 16

HIGHWAY GUARD DETAILS	TRAFFIC SIGNAL CONDUIT	WATER SUPPLY ALTERATIONS	DRAINAGE DETAILS
NONE	NONE	NONE	NONE

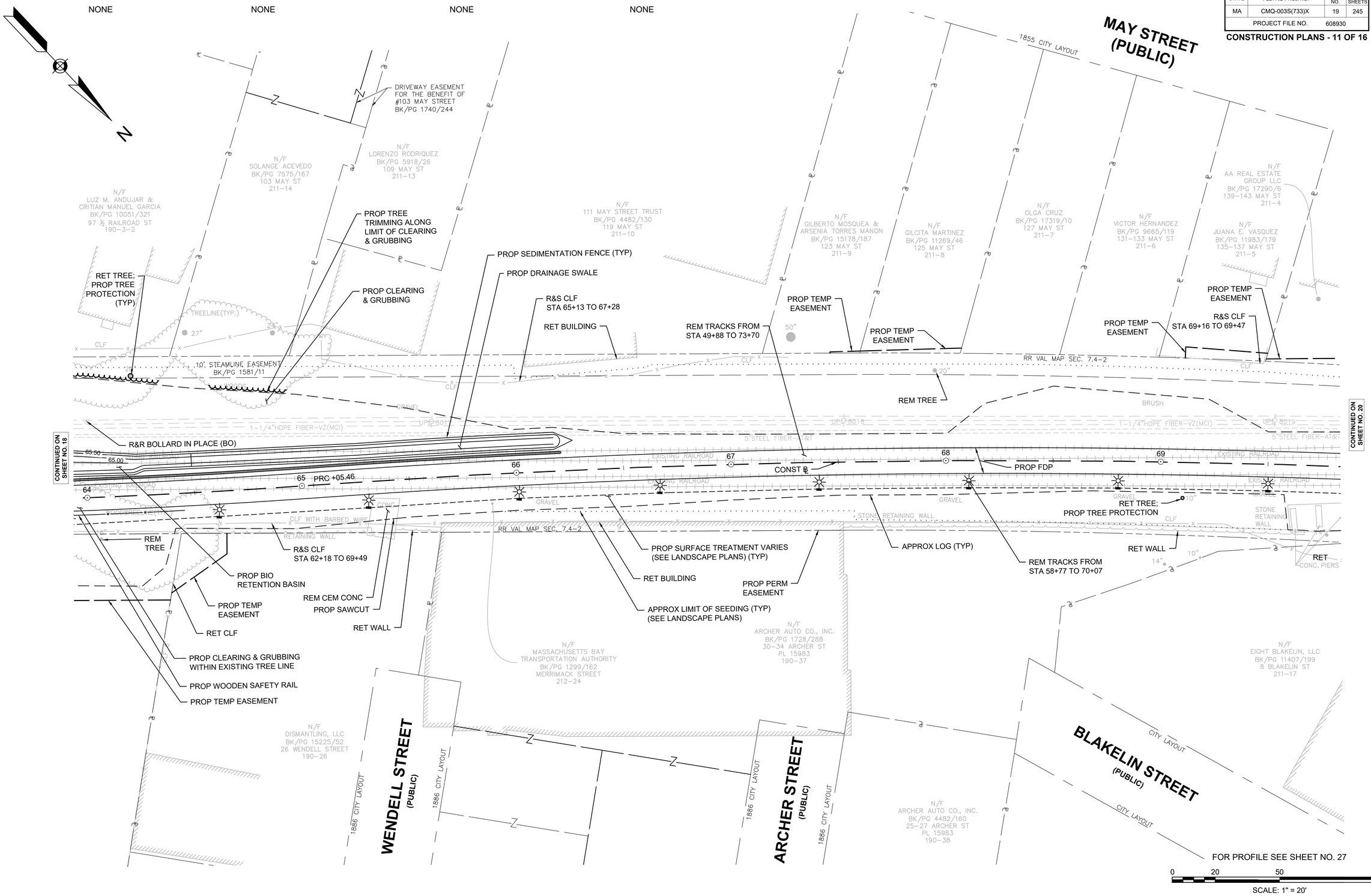

608930_HD5(CONSTRUCTION PLANS).DWG Plotted on 6-Sep-2024 6:24 PM

LAWRENCE
LMRC RAIL TRAIL

STATE	FED. AID PROJ. NO.	SHEET NO.	TOTAL SHEETS
MA	CMQ-003S(733)X	20	245
PROJECT FILE NO.	608930		

CONSTRUCTION PLANS - 12 OF 16

HIGHWAY GUARD DETAILS
NONE

TRAFFIC SIGNAL CONDUIT
NONE

WATER SUPPLY ALTERATIONS
NONE

DRAINAGE DETAILS
NONE

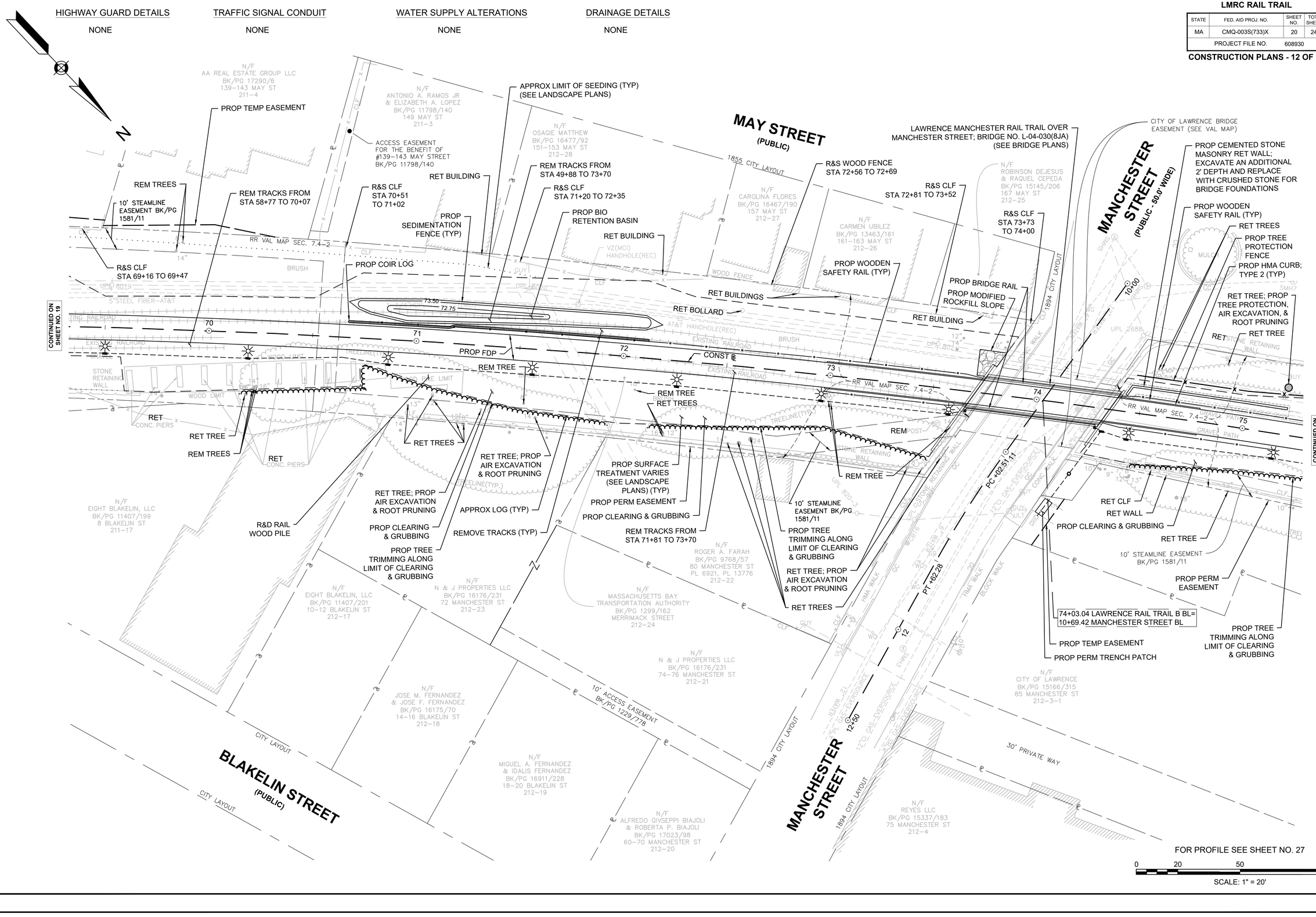

FOR PROFILE SEE SHEET NO. 27

0 20 50 100
SCALE: 1" = 20'

608930_HDS(CONSTRUCTION PLANS).DWG Plotted on 6-Sep-2024 6:24 PM

LAWRENCE
LMRC RAIL TRAIL

STATE	FED. AID PROJ. NO.	SHEET NO.	TOTAL SHEETS
MA	CMQ-003S(733)X	21	245
PROJECT FILE NO.	608930		

CONSTRUCTION PLANS - 13 OF 16

HIGHWAY GUARD DETAILS
NONE

TRAFFIC SIGNAL CONDUIT
NONE

WATER SUPPLY ALTERATIONS
NONE

DRAINAGE DETAILS
NONE

608930_HDS\CONSTRUCTION PLANS\.DWG Plotted on 6-Sep-2024 6:25 PM

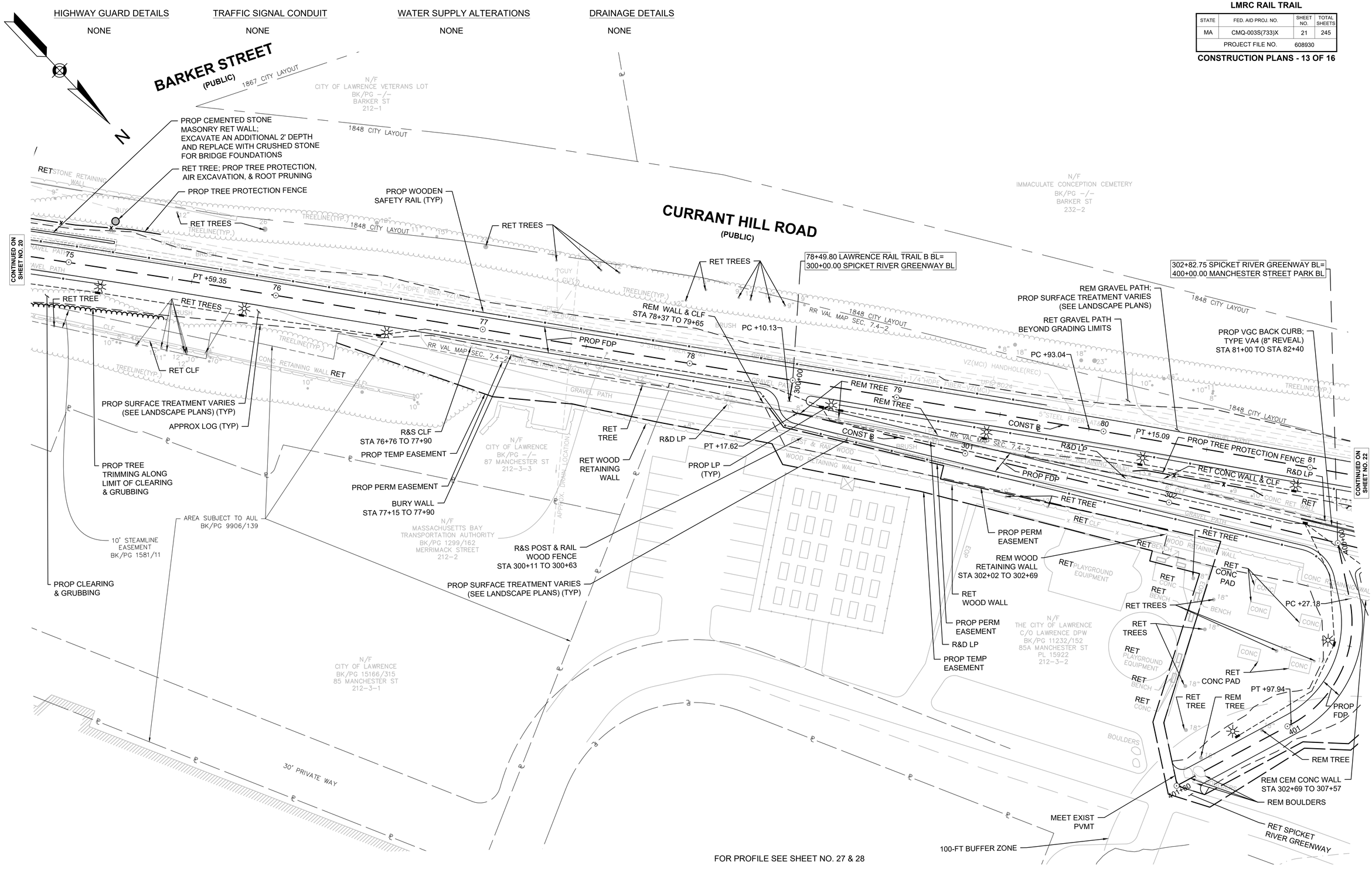

FOR PROFILE SEE SHEET NO. 27 & 28

0 20 50 100

SCALE: 1" = 20'

LAWRENCE
LMRC RAIL TRAIL

STATE	FED. AID PROJ. NO.	SHEET NO.	TOTAL SHEETS
MA	CMQ-003S(733)X	22	245
PROJECT FILE NO.	608930		

CONSTRUCTION PLANS - 14 OF 16

608930_HDS(CONSTRUCTION PLANS).DWG Plotted on 6-Sep-2024 6:25 PM

HIGHWAY GUARD DETAILS
NONE

TRAFFIC SIGNAL CONDUIT
NONE

WATER SUPPLY ALTERATIONS
NONE

DRAINAGE DETAILS
NONE

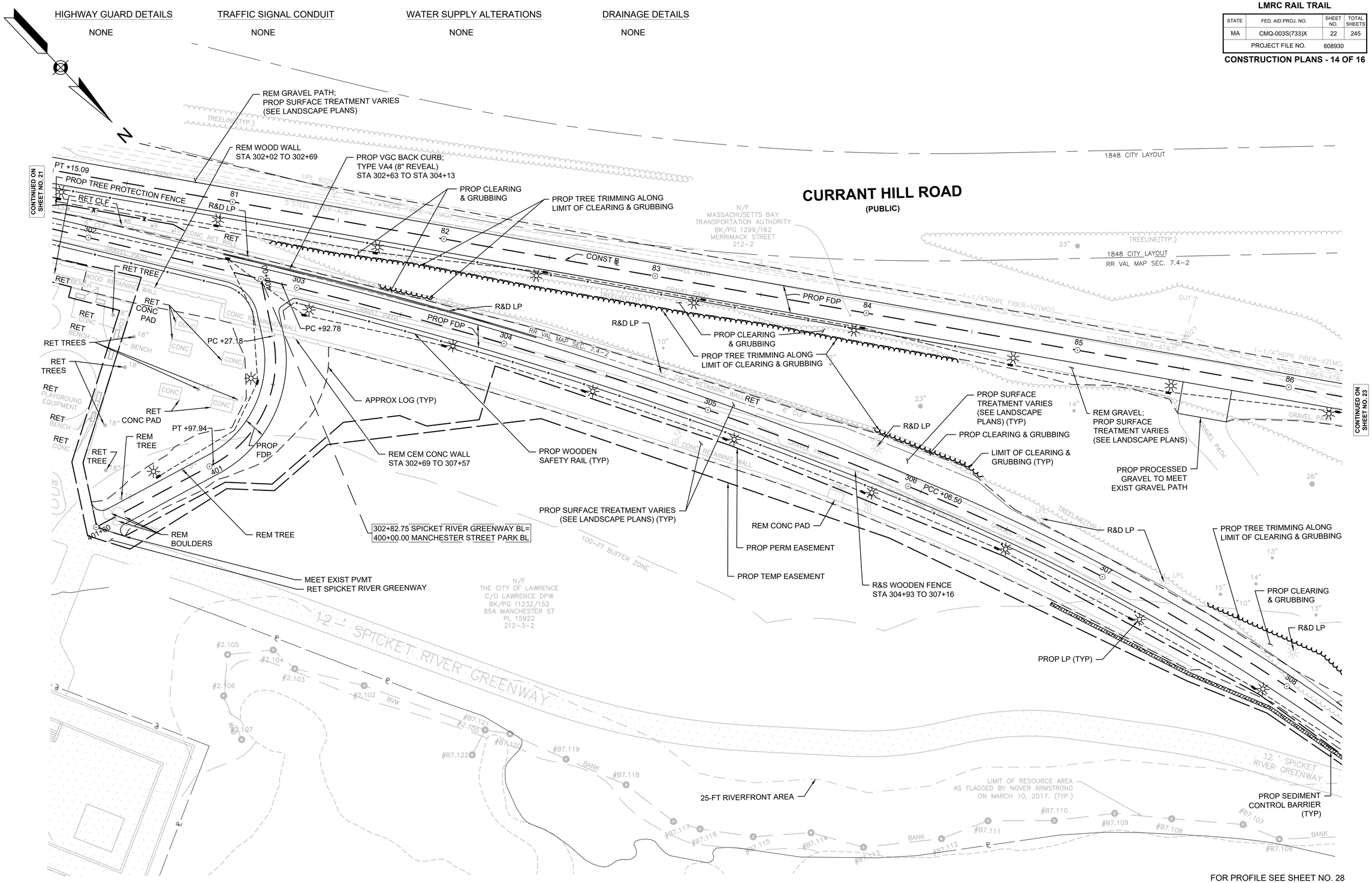

FOR PROFILE SEE SHEET NO. 28

0 20 50 100

SCALE: 1" = 20'

LAWRENCE
LMRC RAIL TRAIL

STATE	FED. AID PROJ. NO.	SHEET NO.	TOTAL SHEETS
MA	CMQ-003S(733)X	23	245
PROJECT FILE NO.	608930		

CONSTRUCTION PLANS - 15 OF 16

608930_HDS\CONSTRUCTION PLANS\.DWG Plotted on 6-Sep-2024 6:26 PM

HIGHWAY GUARD DETAILS
NONE

TRAFFIC SIGNAL CONDUIT
NONE

WATER SUPPLY ALTERATIONS
NONE

DRAINAGE DETAILS
NONE

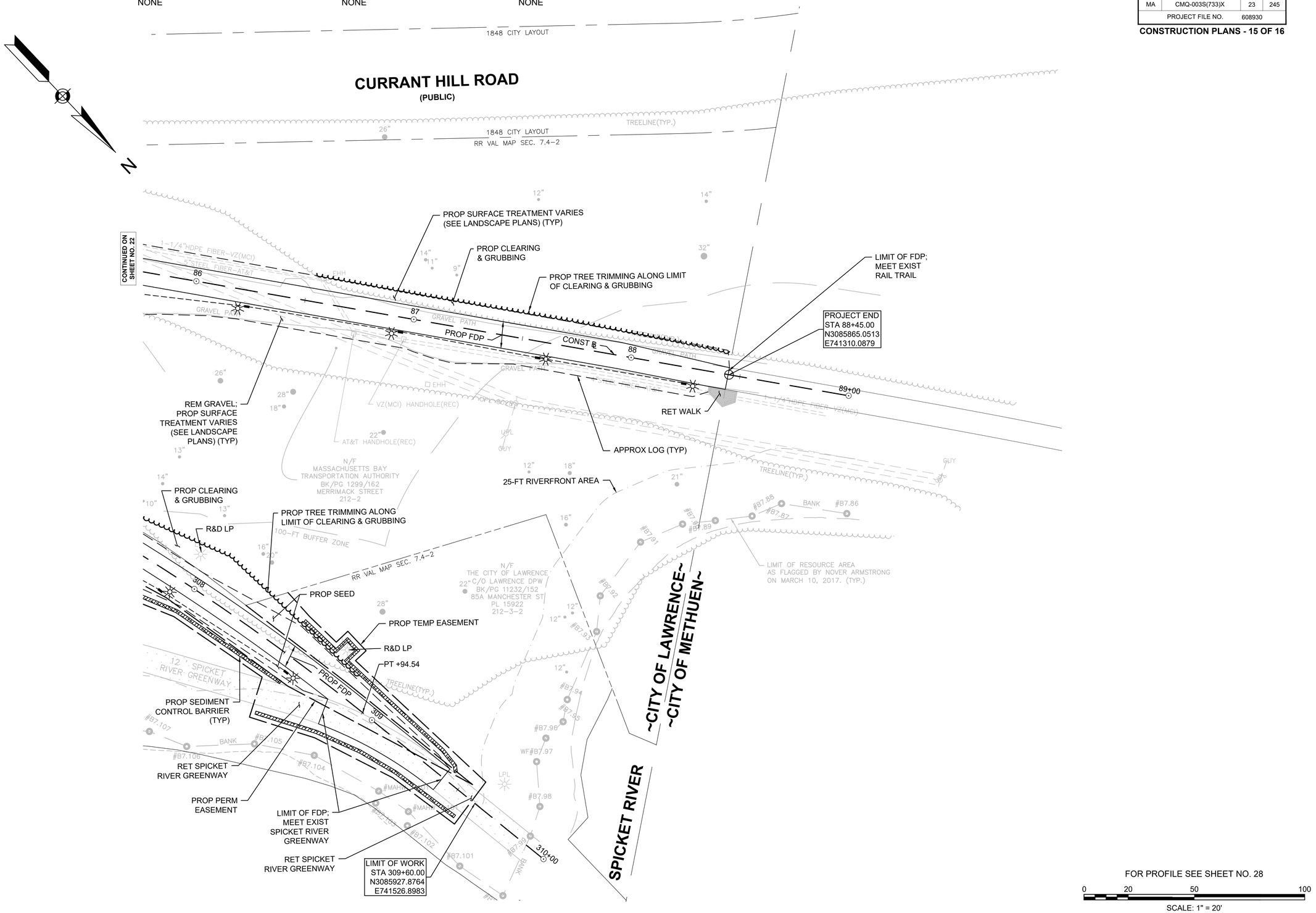

GUARDRAIL DETAILS	TRAFFIC SIGNAL CONDUIT	DRAINAGE DETAILS	WATER SUPPLY ALTERATIONS
NONE	NONE	NONE	SEE SHEET 80

LAWRENCE
LMRC RAIL TRAIL

STATE	FED. AID PROJ. NO.	SHEET NO.	TOTAL SHEETS
MA	CMQ-003S(733)X	24	221
PROJECT FILE NO.	608930		

CONSTRUCTION PLAN - 16 OF 16

LEGEND
(#) = DRIVEWAY NUMBER

PROJECT BEGIN
STA 508+75.00
N3082371.2488
E744401.9855

PROJECT END
STA 513+75.00
N3082632.4552
E744828.3319

508+00 N58°30'21"E 600.00'

LOWELL STREET
(CITY LAYOUT)
(PUBLIC WAY - 50' WIDE)

LMRC RAIL TRAIL

WINTER STREET

PROP RAIL TRAIL WORK (SEE SHEET 14)
ENCROACHMENT EASEMENT BK/PG 3036/317
3' MAINTAINENCE EASEMENT BK/PG 3036/317
MASSDOT BRIDGE EASEMENT BK/PG 1280/493
PROP CEM CONC SW WITH ORNAMENTAL HANDRAIL (TYP)
PROP SHLO ALT NO 8983
PROP CM-TL3 BRIDGE RAIL (TYP)
R&R GC (3" REVEAL) (TYP)
R&R CLF STA 9+64 TO 9+82
PROP TEMP EASEMENT
REM CEM CONC SW; PROP 7.0' (MIN) CEM CONC SW (TYP)
SAWCUT & MEET EXIST SW & CURB
RET GATE
PROP HMA MILL & OVERLAY
PROP FDP 510
LIMIT OF HMA MILL & OVERLAY
REM EXIST STAIRS; PROP CEM CONC STAIRS (DESIGN A) (SEE MASSDOT DETAIL E 304.1.0)
RELOC UP (BO)
PROP FDP PATCH
PROP TEMP EASEMENT
R&R GC (3" REVEAL) TO MEET BACK OF SW (TYP)
SAWCUT & MEET EXIST SW & CURB
PROP BACK OF SW TO MEET EXIST OVERHEAD DOOR OPENING
REM BIT CEM CONC SW; PROP 7.5' (MIN) CEM CONC SW (TYP)
LIMIT OF RESOURCE AREA AS FLAGGED BY NOVER ARMSTRONG ON MARCH 10, 2017. (TYP.)
14' COMMON PASSAGEWAY BK/PG 1577/189
PROP RAIL TRAIL WORK (SEE SHEET 14)
PT +74.17
R=1550.00'
L=270.64'
T=135.66'
RET UPL
RET EXIST ABUT (TYP)
REM BIT CONC CEM SW; PROP 6.5' (MIN) CEM CONC SW (TYP)
PROP PERM SHEETING (SEE BRIDGE PLANS)
R&D WOOD FENCE STA 10+14 TO 11+09
510+49.07 LOWELL STREET BL= 41+15.40 LAWRENCE RAIL TRAIL BL
R&D WOOD FENCE STA 9+84 TO 10+77
PROP ORNAMENTAL HANDRAIL (TYP)
REM EXIST BRIDGE (SEE BRIDGE PLANS)
PROP TEMP EASEMENT
PROP BRIDGE NO. L-04-027 (C90) (SEE BRIDGE PLANS)
R&S CLF STA 10+77 TO 11+11; PROP CLF
5'-0" CM-TL3 BRIDGE RAIL TERMINUS (TYP)
REM CEM CONC SW; PROP 6.0' (MIN) CEM CONC SW (TYP)
PROP CEM CONC SW AT DWY
SAWCUT & MEET EXIST SW & CURB
R&R GC (3" REVEAL) (TYP)
PROP HMA MILL & OVERLAY
CONST Ⓡ
PROP FDP PATCH
SAWCUT & MEET EXIST SW & CURB
R&S CLF STA 11+09 TO 11+76
PROP TEMP EASEMENT
LIMIT OF GRADING (TYP)
LIMIT OF FDP STA 11+53
PROP 4" L&S
PROP 48" CLF; PIPE TOP RAIL LINE POST OPTION
R&R GC (3" REVEAL)
14' COMMON PASSAGEWAY

436 SOUTH UNION REALTY TRUST BK/PG 16629/144 291 LOWELL ST MAP/LOT 166/29
BYRON J. RAMIREZ RODRIGUEZ BK/PG 16383/63 293 LOWELL STREET MAP/LOT 166/28
ZACHARY MACARO BK/PG 11843/318 285 LOWELL STREET MAP/LOT 166/30
MASSACHUSETTS BAY TRANSPORTATION AUTHORITY BK/PG 1299/162 LOWELL STREET MAP/LOT 167/2
283 LOWELL STREET LAWRENCE, LLC BK/PG 12763/126 283 LOWELL STREET MAP/LOT 166/31
WILLIAM J. MATTHES, JR. BK/PG 1571/4 292 LOWELL STREET MAP/LOT 166/66
WILLIAM J. MATTHES, JR. BK/PG 1577/189 284-286 LOWELL STREET MAP/LOT 166/66
MASSACHUSETTS BAY TRANSPORTATION AUTHORITY BK/PG 1299/162 LOWELL STREET MAP/LOT 166/65
DAVID A. BIDER & SYLVIA M. BIDER BK/PG 3161/316 278 LOWELL STREET MAP/LOT 166/64
FULTON STREET CORPORATION BK/PG 3936/289 BROADWAY (REAR OF 92-98) MAP/LOT 166/51
MASSDOT BRIDGE EASEMENT BK/PG 1280/493
RAYPROGRESS, LLC BK/PG 17116/342 364 LOWELL STREET MAP/LOT 166/60
FULTON STREET CORPORATION BK/PG 3936/289 262 LOWELL STREET MAP/LOT 166/59
FULTON STREET CORPORATION BK/PG 3936/289 266 LOWELL STREET MAP/LOT 166/61
THE 290 LOWELL STREET REALTY TRUST BK/PG 4694/65 270-272 LOWELL STREET MAP/LOT 166/62
DAVID A. BIDER & SYLVIA M. BIDER BK/PG 3161/316 274-276 LOWELL STREET MAP/LOT 166/63
RAYPROGRESS, LLC BK/PG 17116/342 617 REAR COMMON STREET MAP/LOT 166/58

0 20 50 100
SCALE: 1" = 20'

FOR CONSTRUCTION NOTES: SEE SHEET NO. 9

FOR PROFILE: SEE SHEET NO. 29

608930_HDA(CON PLANS).DWG Plotted on 6-Sep-2024 6:27 PM

LAWRENCE
LMRC RAIL TRAIL

STATE	FED. AID PROJ. NO.	SHEET NO.	TOTAL SHEETS
MA	CMQ-003S(733)X	25	245
PROJECT FILE NO.	608930		

PROFILES - 1 OF 5

608930_HD6(PROFILE).DWG Plotted on 6-Sep-2024 9:19 AM

LMRC RAIL TRAIL

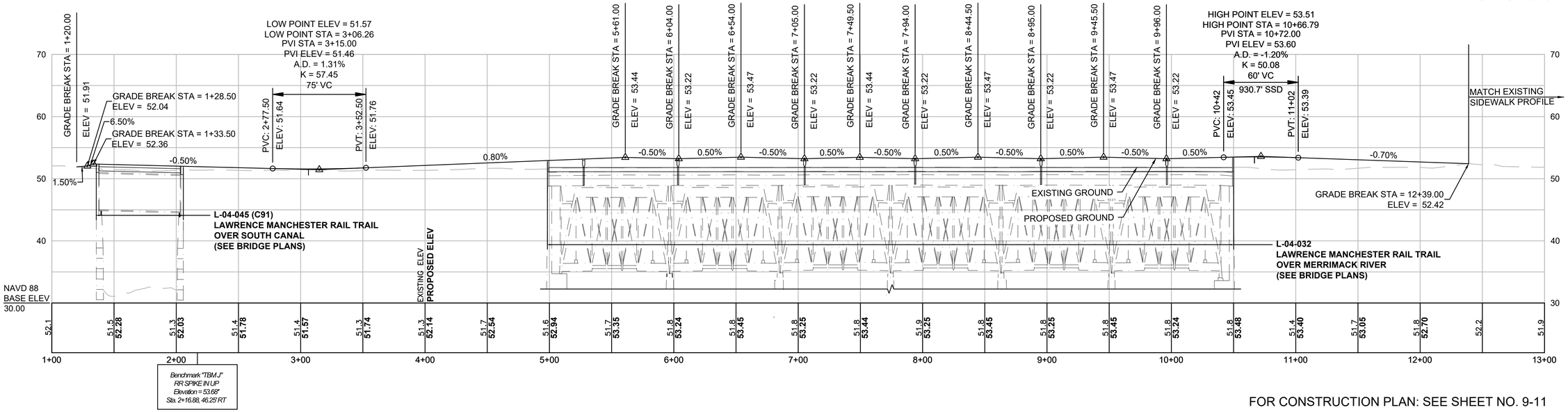

FOR CONSTRUCTION PLAN: SEE SHEET NO. 9-11

LMRC RAIL TRAIL

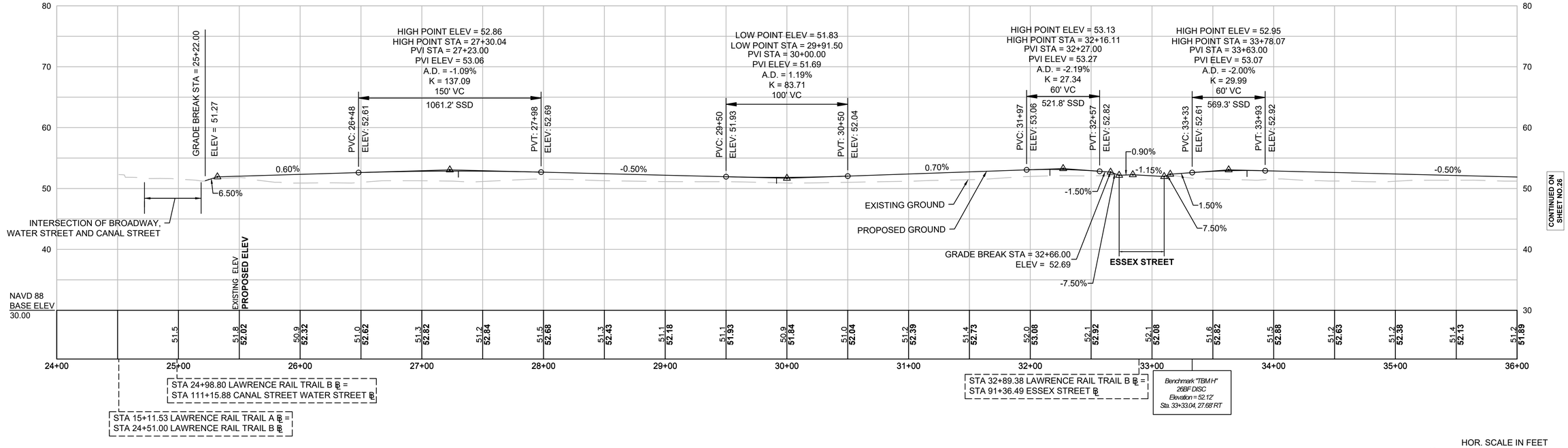

FOR CONSTRUCTION PLAN: SEE SHEET NO. 11-13

HOR. SCALE IN FEET
40 0 40 80
8 0 8 16
VER. SCALE IN FEET

LAWRENCE
LMRC RAIL TRAIL

STATE	FED. AID PROJ. NO.	SHEET NO.	TOTAL SHEETS
MA	CMQ-003S(733)X	26	245
PROJECT FILE NO.		608930	

PROFILES - 2 OF 5

608930_HD6(PROFILE).DWG Plotted on 6-Sep-2024 9:20 AM

LMRC RAIL TRAIL

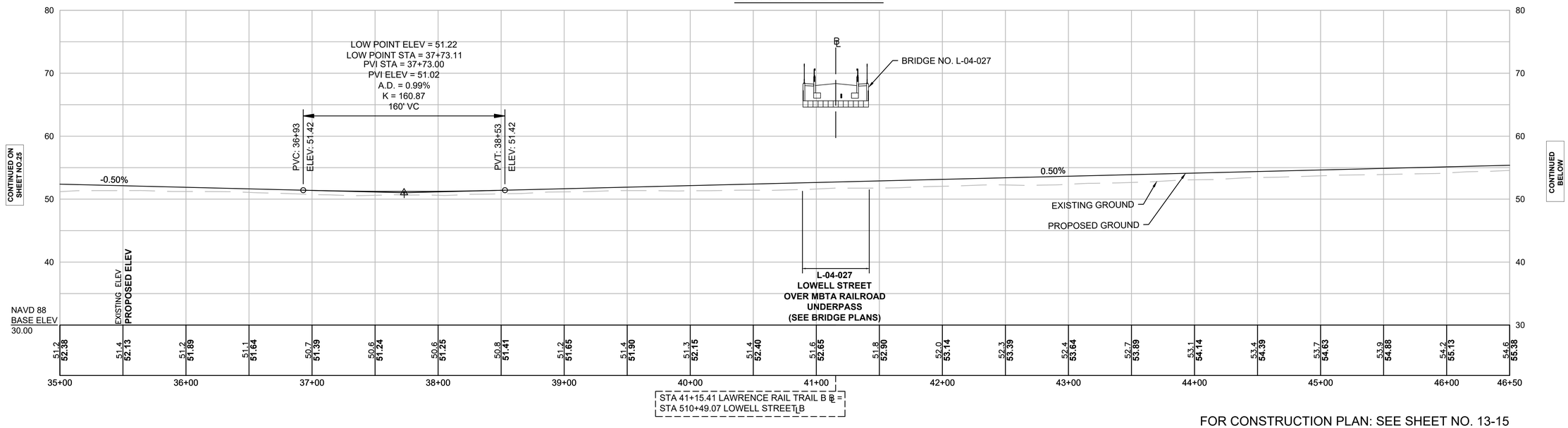

FOR CONSTRUCTION PLAN: SEE SHEET NO. 13-15

LMRC RAIL TRAIL

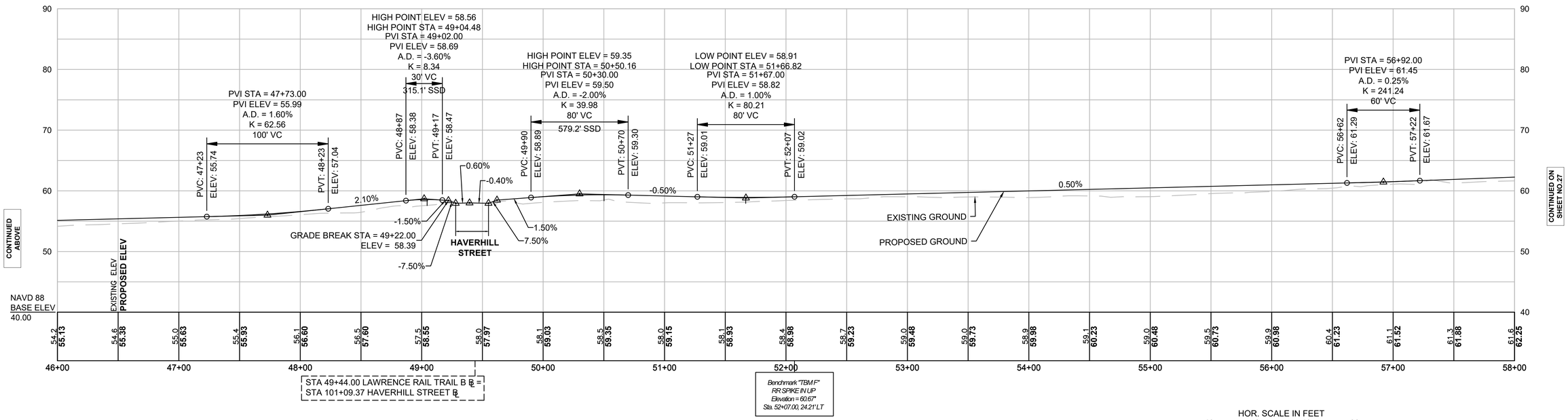

FOR CONSTRUCTION PLAN: SEE SHEET NO. 15-17

HOR. SCALE IN FEET
40 0 40 80
VER. SCALE IN FEET
8 0 8 16

LAWRENCE
LMRC RAIL TRAIL

STATE	FED. AID PROJ. NO.	SHEET NO.	TOTAL SHEETS
MA	CMQ-003S(733)X	27	245
PROJECT FILE NO.	608930		

PROFILES - 3 OF 5

608930_HD6(PROFILE).DWG Plotted on 6-Sep-2024 9:21 AM

LMRC RAIL TRAIL

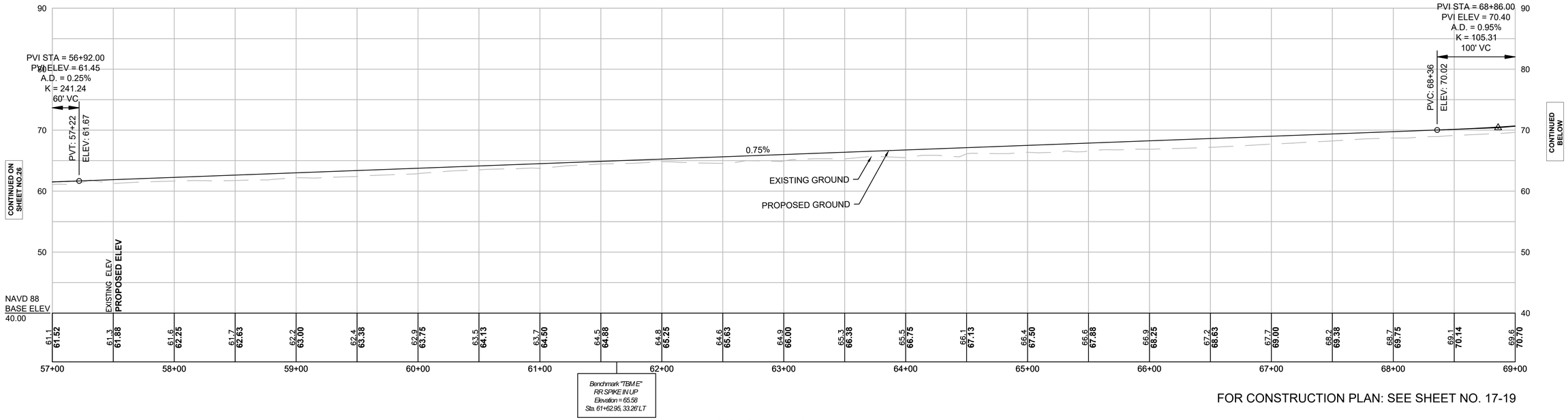

FOR CONSTRUCTION PLAN: SEE SHEET NO. 17-19

LMRC RAIL TRAIL

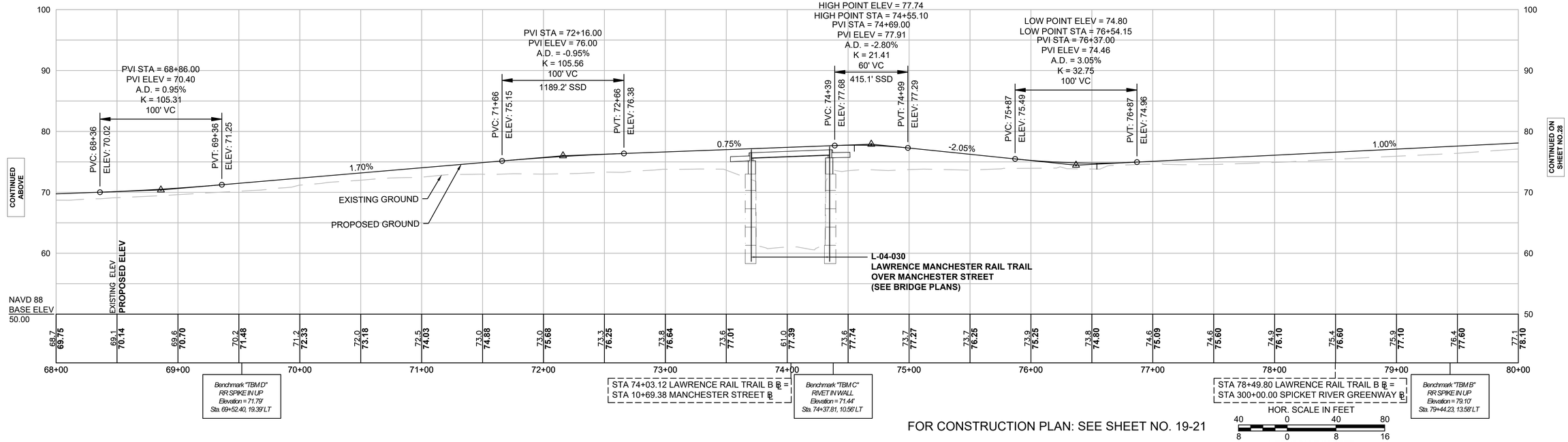

FOR CONSTRUCTION PLAN: SEE SHEET NO. 19-21

LMRC RAIL TRAIL

LAWRENCE
LMRC RAIL TRAIL

STATE	FED. AID PROJ. NO.	SHEET NO.	TOTAL SHEETS
MA	CMQ-003S(733)X	28	245
PROJECT FILE NO.	608930		

PROFILES - 4 OF 5

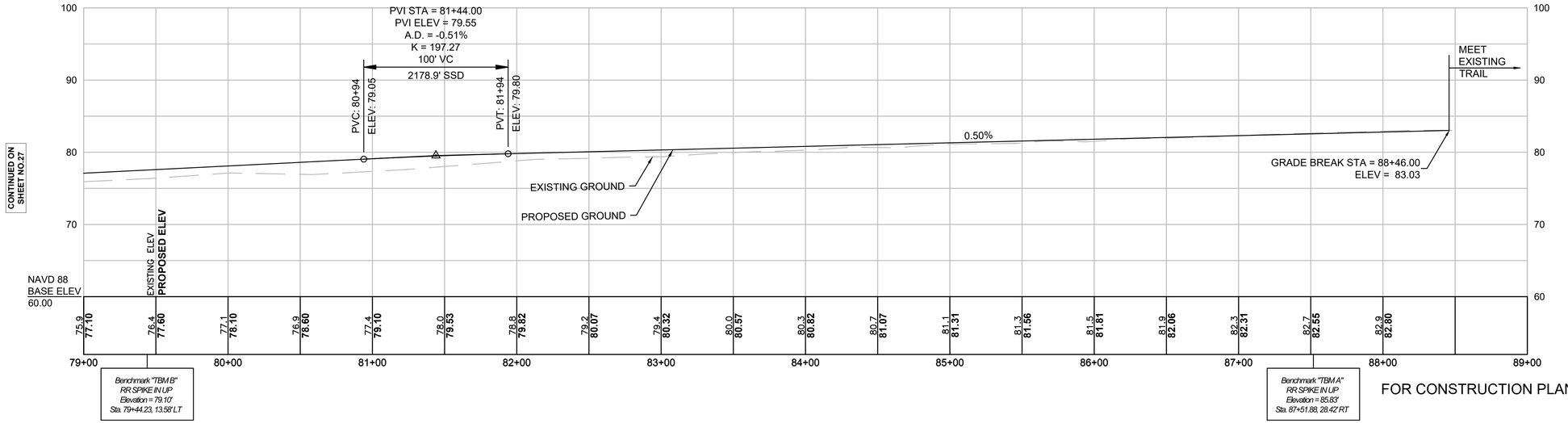

FOR CONSTRUCTION PLAN: SEE SHEET NO. 21-23

SPICKET RIVER GREENWAY

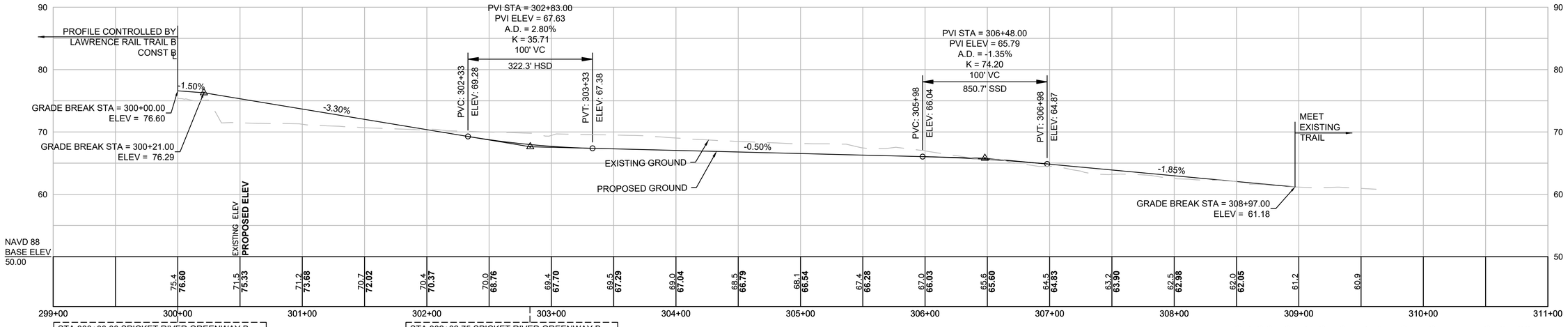

FOR CONSTRUCTION PLAN: SEE SHEET NO. 21-23

MANCHESTER STREET PARK

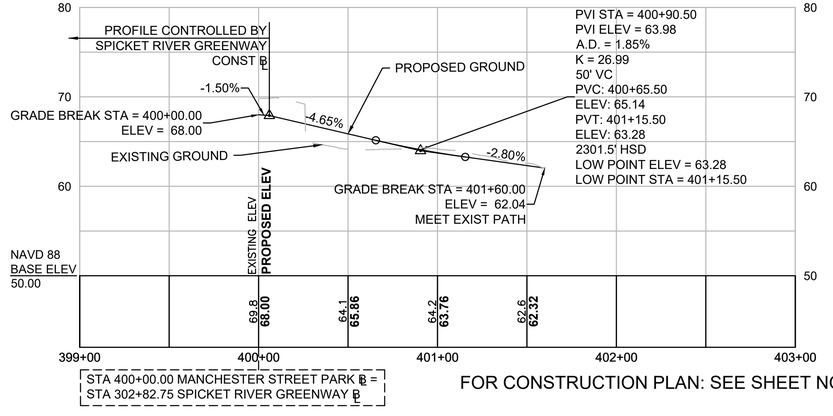

FOR CONSTRUCTION PLAN: SEE SHEET NO. 21 & 22

HOR. SCALE IN FEET
40 0 40 80
8 0 8 16
VER. SCALE IN FEET

608930_HDB(PROFILE).DWG Plotted on 6-Sep-2024 9:22 AM

LAWRENCE
LMRC RAIL TRAIL

STATE	FED. AID PROJ. NO.	SHEET NO.	TOTAL SHEETS
MA	CMQ-003S(733)X	29	245
	PROJECT FILE NO. 608930		

PROFILES - 5 OF 5

608930_HDS\PROF XSECT\.DWG Plotted on 6-Sep-2024 9:22 AM

LOWELL STREET

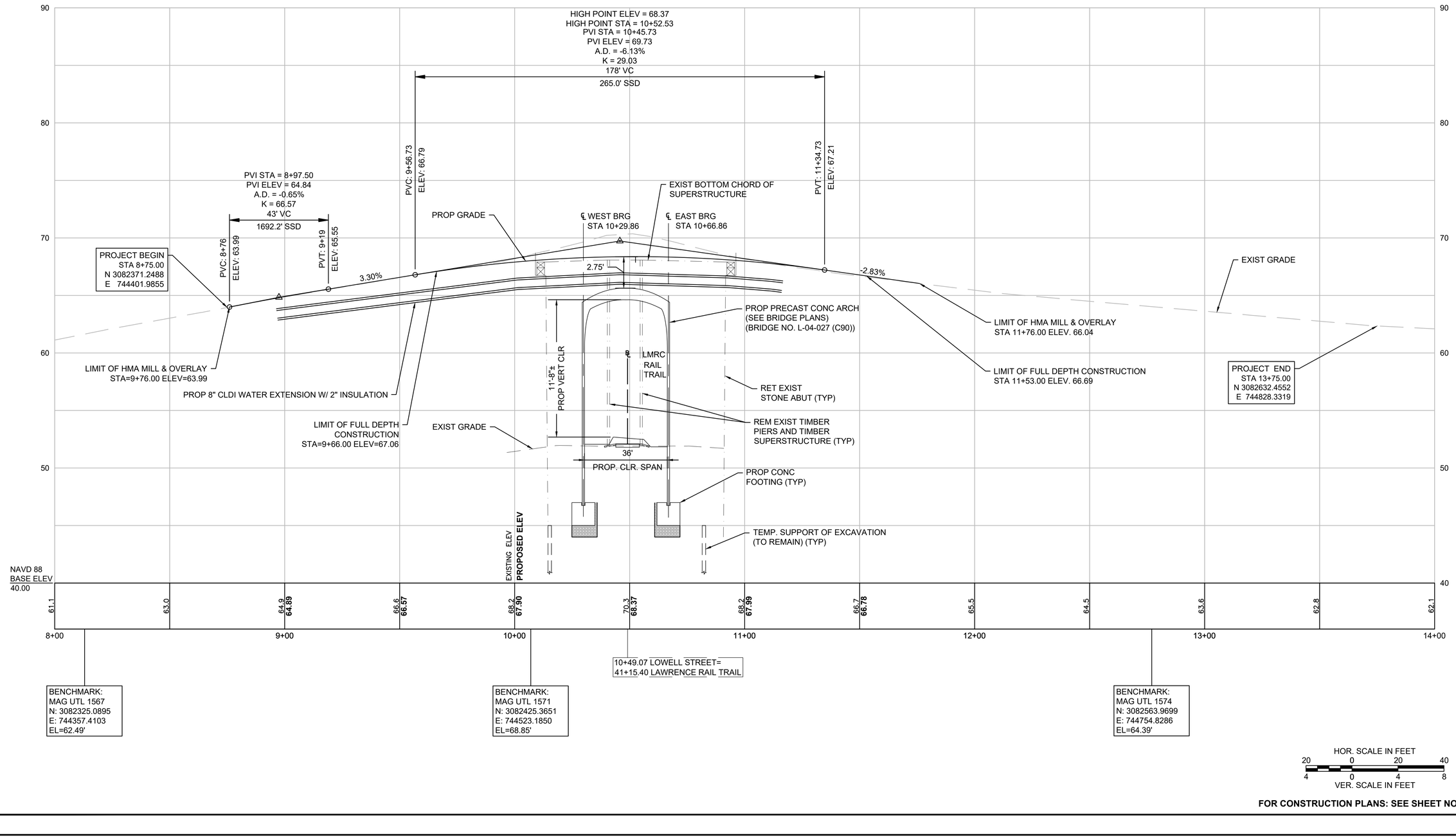

HOR. SCALE IN FEET
20 0 20 40
4 0 4 8
VER. SCALE IN FEET

FOR CONSTRUCTION PLANS: SEE SHEET NO. 24

LAWRENCE
LMRC RAIL TRAIL

STATE	FED. AID PROJ. NO.	SHEET NO.	TOTAL SHEETS
MA	CMQ-003S(733)X	30	245
PROJECT FILE NO.	608930		

CURB TIE & GRADING PLANS - 1 OF 16

608930_HD6A(CURB TIE & GRADING).DWG Plotted on 7-Sep-2024 12:31 AM

LAWRENCE RAIL TRAIL A BL CONSTRUCTION BASELINE DATA								
NUMBER	STARTING STATION	NORTHING	EASTING	CURVE DATA	LINE DATA	ENDING STATION	NORTHING	EASTING
L1	0+50.00	3080229.7696	746627.7512		N38°57'26"W 153.93'	2+03.93	3080349.4688	746530.9687
C1	2+03.93	3080349.4688	746530.9687	R=150.00' Δ=7°07'55" L=18.67' T=9.35'		2+22.60	3080363.2208	746518.3572
C2	2+22.60	3080363.2208	746518.3572	R=150.00' Δ=7°03'09" L=18.46' T=9.24'		2+41.07	3080376.8109	746505.8766
L2	2+41.07	3080376.8109	746505.8766		N39°02'12"W 936.40'	11+77.47	3081104.1534	745916.1149

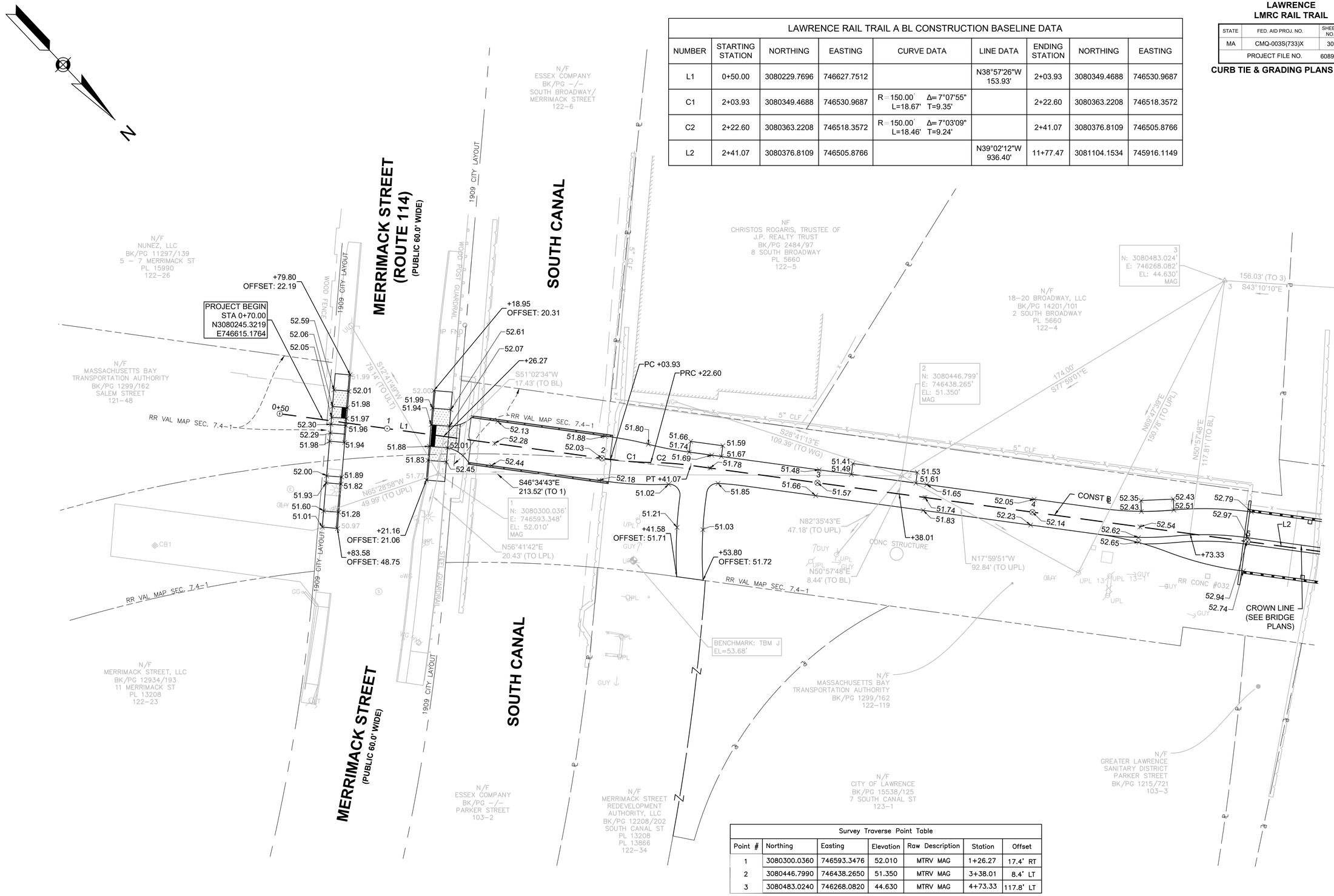

Survey Traverse Point Table						
Point #	Northing	Easting	Elevation	Raw Description	Station	Offset
1	3080300.0360	746593.3476	52.010	MTRV MAG	1+26.27	17.4' RT
2	3080446.7990	746438.2650	51.350	MTRV MAG	3+38.01	8.4' LT
3	3080483.0240	746268.0820	44.630	MTRV MAG	4+73.33	117.8' LT

0 20 50 100
SCALE: 1" = 20'

LAWRENCE
LMRC RAIL TRAIL

STATE	FED. AID PROJ. NO.	SHEET NO.	TOTAL SHEETS
MA	CMQ-003S(733)X	31	245
	PROJECT FILE NO. 608930		

CURB TIE & GRADING PLANS - 2 OF 16

608930_HD6A(CURB TIE & GRADING).DWG Plotted on 7-Sep-2024 12:32 AM

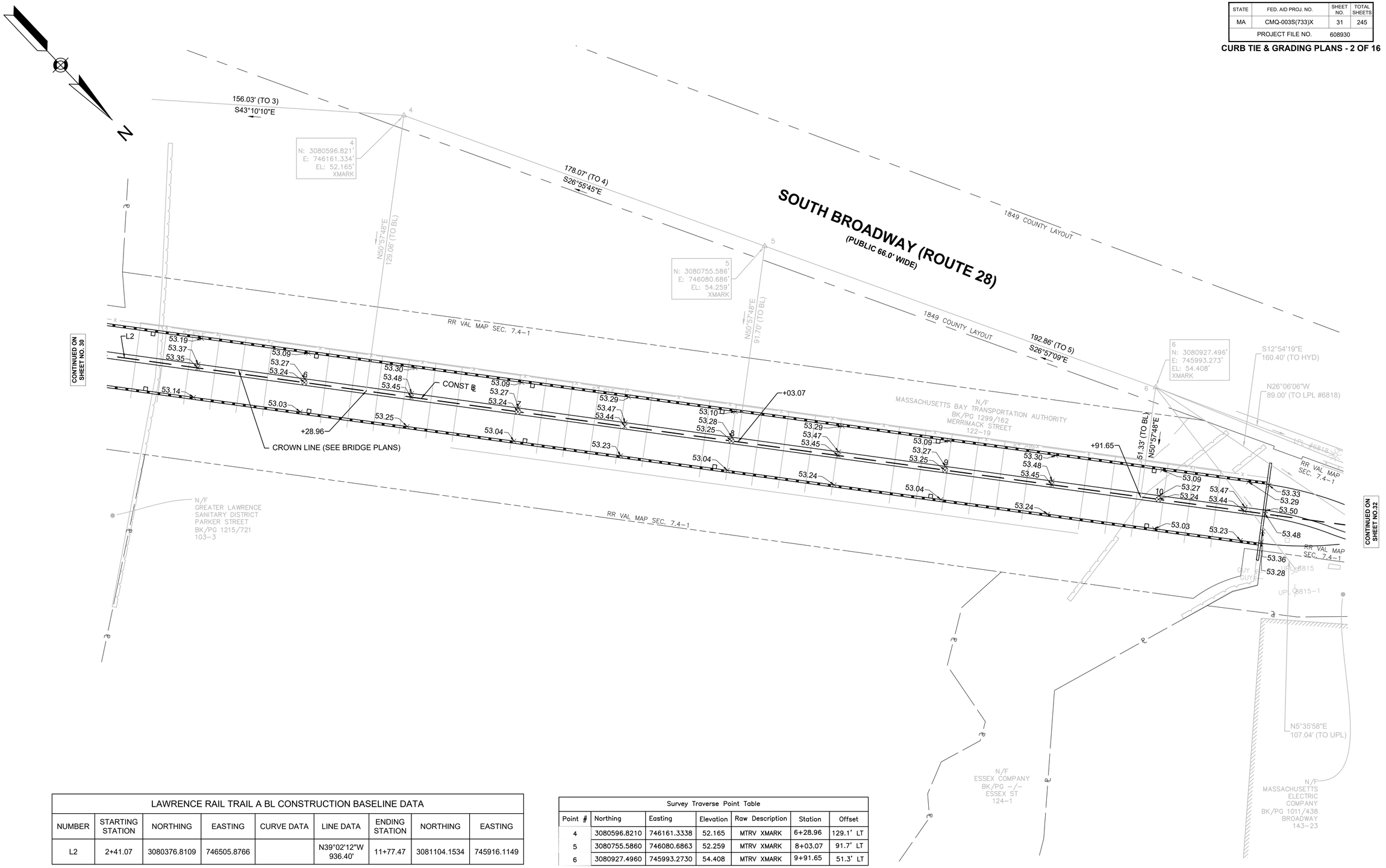

LAWRENCE RAIL TRAIL A BL CONSTRUCTION BASELINE DATA								
NUMBER	STARTING STATION	NORTHING	EASTING	CURVE DATA	LINE DATA	ENDING STATION	NORTHING	EASTING
L2	2+41.07	3080376.8109	746505.8766		N39°02'12"W 936.40'	11+77.47	3081104.1534	745916.1149

Survey Traverse Point Table						
Point #	Northing	Easting	Elevation	Raw Description	Station	Offset
4	3080596.8210	746161.3338	52.165	MTRV XMARK	6+28.96	129.1' LT
5	3080755.5860	746080.6863	52.259	MTRV XMARK	8+03.07	91.7' LT
6	3080927.4960	745993.2730	54.408	MTRV XMARK	9+91.65	51.3' LT

LAWRENCE
LMRC RAIL TRAIL

STATE	FED. AID PROJ. NO.	SHEET NO.	TOTAL SHEETS
MA	CMQ-003S(733)X	32	245
PROJECT FILE NO.	608930		

CURB TIE & GRADING PLANS - 3 OF 16

608930_HD6A(CURB TIE & GRADING).DWG Plotted on 7-Sep-2024 12:32 AM

Curve Table				
Curve #	Length	Direction/Delta	Radius	Tangent
C1	21.61'	2°15'57"	546.50'	10.81'
C2	19.16'	7°39'01"	143.50'	9.59'
C3	9.48'	181°05'20"	3.00'	315.68'
C4	9.51'	181°43'11"	3.00'	199.88'
C5	19.49'	44°39'53"	25.00'	10.27'
C6	21.14'	100°56'20"	12.00'	14.54'
C7	6.57'	15°02'51"	25.00'	3.30'
C8	20.48'	78°14'18"	15.00'	12.20'
C9	26.15'	99°52'39"	15.00'	17.84'

Survey Traverse Point Table						
Point #	Northing	Easting	Elevation	Raw Description	Station	Offset
7	3081092.6600	745916.4718	51.993	MTRV MAG	11+68.31	7.0' LT
8	3081228.0720	745820.2144	51.918	MTRV MAG	13+23.39	61.3' LT
9	3081341.6870	745721.4785	51.102	MTRV MAG	24+77.51	10.5' LT

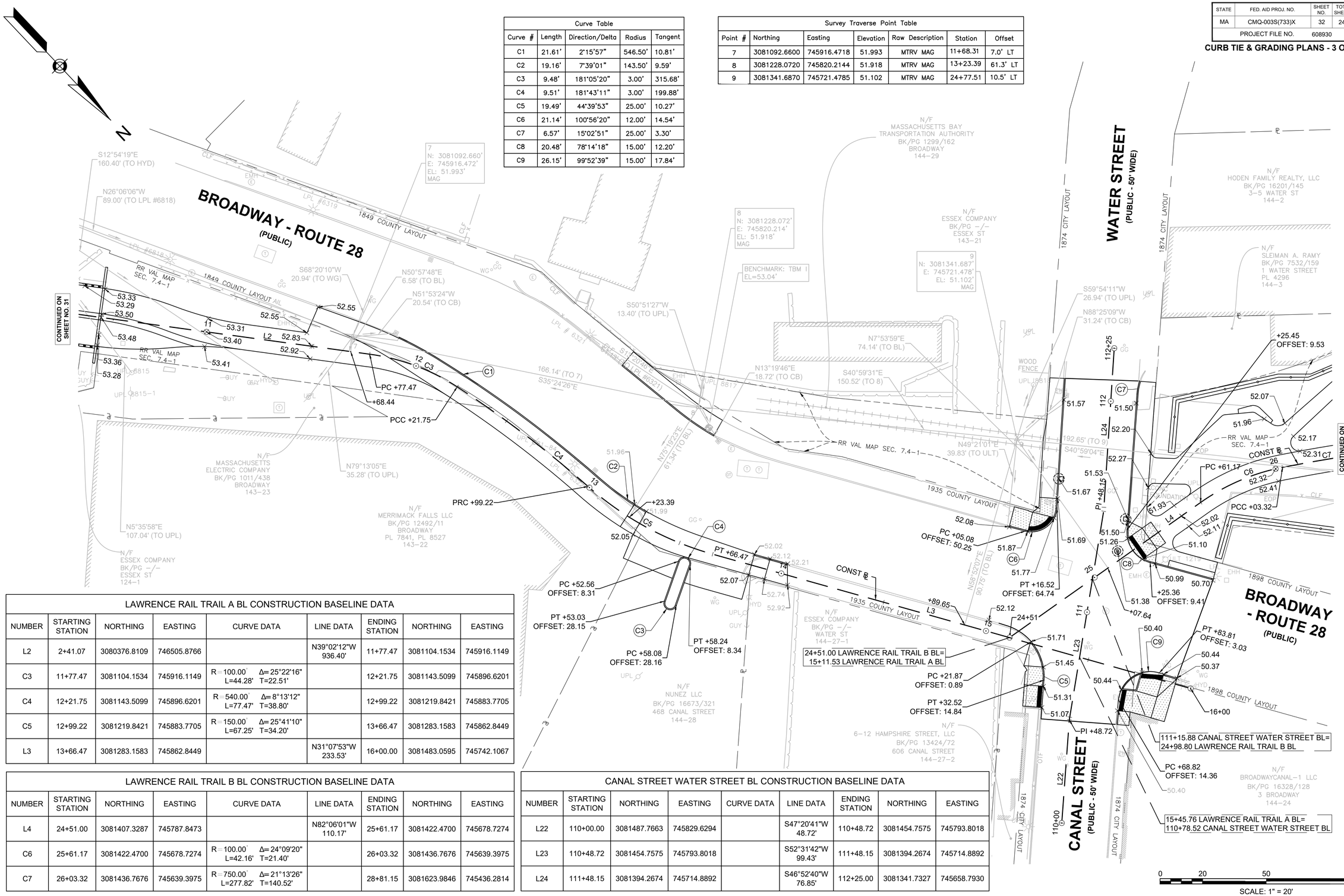

LAWRENCE RAIL TRAIL A BL CONSTRUCTION BASELINE DATA								
NUMBER	STARTING STATION	NORTHING	EASTING	CURVE DATA	LINE DATA	ENDING STATION	NORTHING	EASTING
L2	2+41.07	3080376.8109	746505.8766		N39°02'12"W 936.40'	11+77.47	3081104.1534	745916.1149
C3	11+77.47	3081104.1534	745916.1149	R=100.00' Δ=25°22'16" L=44.28' T=22.51'		12+21.75	3081143.5099	745896.6201
C4	12+21.75	3081143.5099	745896.6201	R=540.00' Δ=8°13'12" L=77.47' T=38.80'		12+99.22	3081219.8421	745883.7705
C5	12+99.22	3081219.8421	745883.7705	R=150.00' Δ=25°41'10" L=67.25' T=34.20'		13+66.47	3081283.1583	745862.8449
L3	13+66.47	3081283.1583	745862.8449		N31°07'53"W 233.53'	16+00.00	3081483.0595	745742.1067

LAWRENCE RAIL TRAIL B BL CONSTRUCTION BASELINE DATA								
NUMBER	STARTING STATION	NORTHING	EASTING	CURVE DATA	LINE DATA	ENDING STATION	NORTHING	EASTING
L4	24+51.00	3081407.3287	745787.8473		N82°06'01"W 110.17'	25+61.17	3081422.4700	745678.7274
C6	25+61.17	3081422.4700	745678.7274	R=100.00' Δ=24°09'20" L=42.16' T=21.40'		26+03.32	3081436.7676	745639.3975
C7	26+03.32	3081436.7676	745639.3975	R=750.00' Δ=21°13'26" L=277.82' T=140.52'		28+81.15	3081623.9846	745436.2814

CANAL STREET WATER STREET BL CONSTRUCTION BASELINE DATA								
NUMBER	STARTING STATION	NORTHING	EASTING	CURVE DATA	LINE DATA	ENDING STATION	NORTHING	EASTING
L22	110+00.00	3081487.7663	745829.6294		S47°20'41"W 48.72'	110+48.72	3081454.7575	745793.8018
L23	110+48.72	3081454.7575	745793.8018		S52°31'42"W 99.43'	111+48.15	3081394.2674	745714.8892
L24	111+48.15	3081394.2674	745714.8892		S46°52'40"W 76.85'	112+25.00	3081341.7327	745658.7930

LAWRENCE
LMRC RAIL TRAIL

STATE	FED. AID PROJ. NO.	SHEET NO.	TOTAL SHEETS
MA	CMQ-003S(733)X	33	245
PROJECT FILE NO.	608930		

CURB TIE & GRADING PLANS - 4 OF 16

Survey Traverse Point Table						
Point #	Northing	Easting	Elevation	Raw Description	Station	Offset
7	3081487.1130	745595.1307	50.761	MTRV MAG	26+69.00	16.5' RT
8	3081637.1840	745434.8868	50.942	MTRV MAG	28+92.38	6.9' RT
9	3081758.7510	745310.5012	51.044	MTRV MAG	30+65.56	2.4' RT

LAWRENCE RAIL TRAIL B BL CONSTRUCTION BASELINE DATA								
NUMBER	STARTING STATION	NORTHING	EASTING	CURVE DATA	LINE DATA	ENDING STATION	NORTHING	EASTING
C7	26+03.32	3081436.7676	745639.3975	R=750.00' Δ=21°13'26" L=277.82' T=140.52'		28+81.15	3081623.9846	745436.2814
C8	28+81.15	3081623.9846	745436.2814	R=750.00' Δ=25°07'34" L=328.90' T=167.14'		32+10.05	3081836.8168	745188.9846

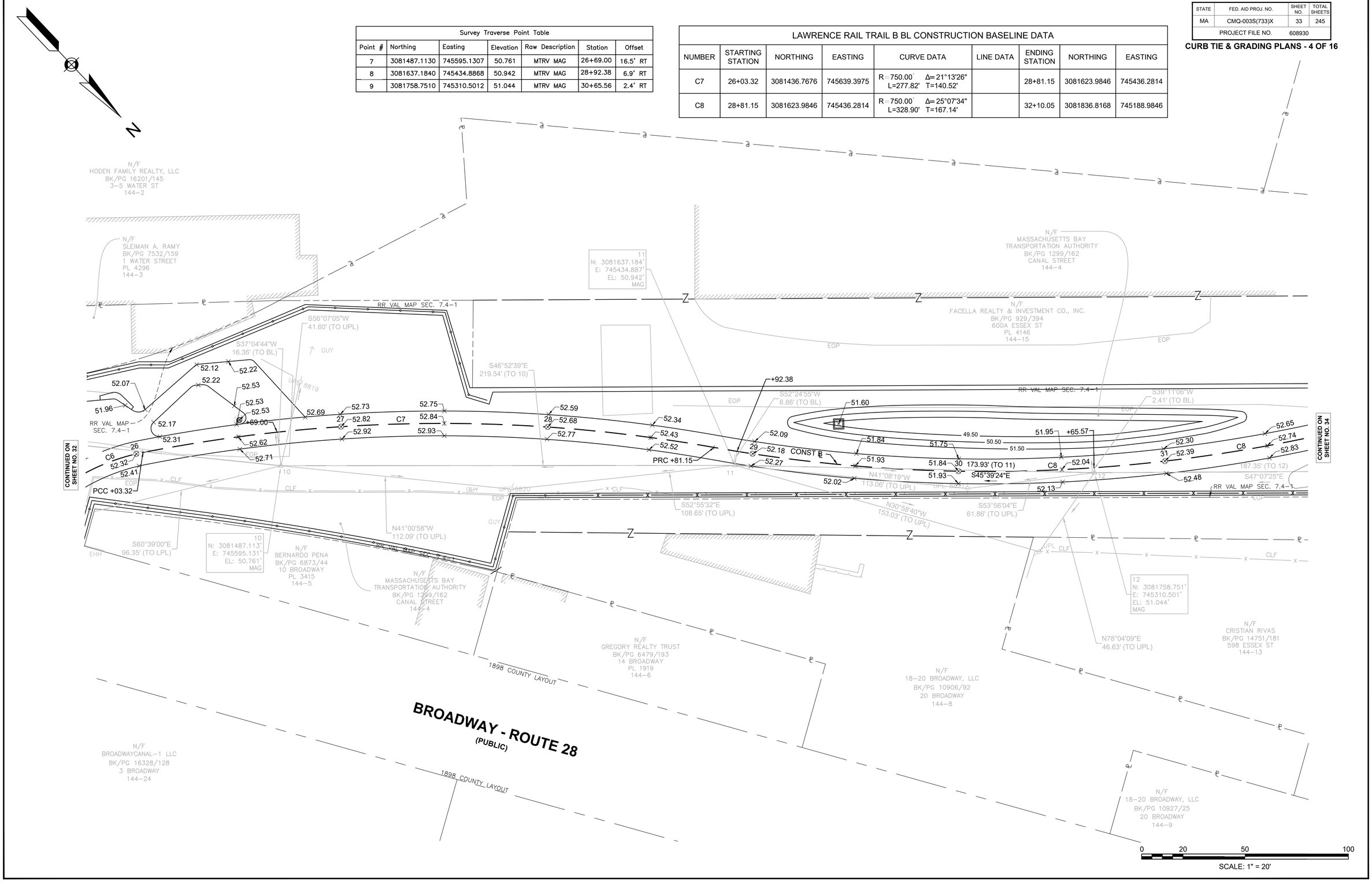

608930_HD6A(CURB TIE & GRADING).DWG Plotted on 7-Sep-2024 12:33 AM

LAWRENCE
LMRC RAIL TRAIL

STATE	FED. AID PROJ. NO.	SHEET NO.	TOTAL SHEETS
MA	CMQ-003S(733)X	34	245
PROJECT FILE NO.	608930		

CURB TIE & GRADING PLANS - 5 OF 16

608930_HD6A(CURB TIE & GRADING).DWG Plotted on 7-Sep-2024 12:33 AM

Curve Table				
Curve #	Length	Direction/Delta	Radius	Tangent
C10	7.04'	40°18'57"	10.00'	3.67'
C11	7.04'	40°18'54"	10.00'	3.67'
C12	11.20'	53°29'10"	12.00'	6.05'
C13	11.25'	53°43'29"	12.00'	6.08'

Survey Traverse Point Table						
Point #	Northing	Easting	Elevation	Raw Description	Station	Offset
13	3081886.2290	745173.2057	52.210	MTRV MAG	32+61.18	16.3' RT
14	3082030.3490	745019.6666	51.182	MTRV MAG	34+70.59	21.3' RT
15	3082152.2470	744877.9498	50.895	MTRV MAG	36+65.27	23.2' RT

LAWRENCE RAIL TRAIL B BL CONSTRUCTION BASELINE DATA								
NUMBER	STARTING STATION	NORTHING	EASTING	CURVE DATA	LINE DATA	ENDING STATION	NORTHING	EASTING
C8	28+81.15	3081623.9846	745436.2814	R=750.00' Δ=25°07'34" L=328.90' T=167.14'		32+10.05	3081836.8168	745188.9846
C9	32+10.05	3081836.8168	745188.9846	R=30.00' Δ=30°41'24" L=16.07' T=8.23'		32+26.12	3081847.7460	745177.4669
L5	32+26.12	3081847.7460	745177.4669		N31°09'24"W 120.53'	33+46.65	3081950.8944	745115.1044
C10	33+46.65	3081950.8944	745115.1044	R=45.00' Δ=36°30'42" L=28.68' T=14.84'		33+75.33	3081969.2373	745093.6938
C11	33+75.33	3081969.2373	745093.6938	R=620.00' Δ=30°19'49" L=328.21' T=168.05'		37+03.53	3082166.6962	744836.3289

ESSEX STREET BL CONSTRUCTION BASELINE DATA								
NUMBER	STARTING STATION	NORTHING	EASTING	CURVE DATA	LINE DATA	ENDING STATION	NORTHING	EASTING
L15	90+00.00	3081831.2745	745027.9321		N58°50'54"E 300.00'	93+00.00	3081986.4665	745284.6721

ESSEX STREET (PUBLIC - 60.0' WIDE)
1856 CITY LAYOUT
90+00
N/F FACELLA REALTY & INVESTMENT BK/PG 39/557 600 ESSEX ST 144–16
N/F GANGI REALTY CORPORATION BK/PG 1617/157 621 ESSEX ST 165–36–B
N/F GANGI REALTY CORPORATION BK/PG –/– 19 WINTER STREET PL 5746 165–33
32+89.30 LAWRENCE RAIL TRAIL B BL= 91+36.49 ESSEX STREET BL
PT +68.54 OFFSET: 29.11
PRC +70.82 OFFSET: 22.61
PC +73.29 OFFSET: 16.17
PT +26.12
PRC +10.05
RR VAL MAP SEC. 7.4–1
+61.18
S58°50'36"W 16.26' (TO BL)
CONST ℄
BW 52.73 TW 54.23
BW 52.78 TW 54.28
S47°07'25"E 187.35' (TO 12)
S75°51'55"E 91.69' (TO UPL)
N11°42'57"W 27.53' (TO TMH)
N44°09'27"E 38.86' (TO UPL)
13 N: 3081886.229' E: 745173.206' EL: 52.210' MAG
BENCHMARK: 26BF DISC EL=52.12'
14 N: 3082030.349' E: 745019.667' EL: 51.182' MAG
15 N: 3082152.247' E: 744877.950' EL: 50.895' MAG
PC +46.65
PRC +75.33
PC +15.29 OFFSET: 75.86
PRC +20.82 OFFSET: 85.19
PT +26.35 OFFSET: 94.47
93+00
1932 CITY LAYOUT
S71°35'44"W 59.95' (TO UPL)
S31°08'31"W 21.34' (TO BL)
S71°24'11"E 76.90' (TO UPL)
S53°25'06"E 60.23' (TO UPL)
S46°48'45"E 210.58' (TO 14)
N31°03'52"W 164.40' (TO UPL)
S49°07'59"W 23.20' (TO BL)
S49°17'57"E 186.93' (TO 15)
S64°09'59"E 52.79' (TO UPL)
S45°51'33"E 177.95' (TO 16)
N37°34'21"W 183.38' (TO UPL)
+70.59
+65.27
PRC +03.53
RR VAL MAP SEC. 7.4–1
CONTINUED ON SHEET NO. 33
CONTINUED ON SHEET NO. 35
N/F CRISTIAN RIVAS BK/PG 14751/181 598 ESSEX ST 144–13
N/F ARROW FLOOR & WALL COVERING CO. BK/PG 1112/450 619 ESSEX STREET 165–37
N/F JOAQUIN ROSA BK/PG 9397/270 621 COMMON ST PL 4211 166–45
N/F FULTON STREET CORPORATION BK/PG 3936/289 REAR 92–98 BROADWAY PL 4226 166–51
N/F MASSACHUSETTS BAY TRANSPORTATION AUTHORITY BK/PG 1299/162 LOWELL STREET 166–65
N/F MCDONALD'S CORPORATION BK/PG 3122/53 50 BROADWAY 145–1
COMMON STREET (PUBLIC - 60.0' WIDE)
N/F AJ WOLF REALTY, LLC BK/PG 5711/309 613 COMMON STREET PL 5746 166–47
N/F CITY OF LAWRENCE BK/PG –/– 617 COMMON STREET PL 5746 166–46

0 20 50 100
SCALE: 1" = 20'

LAWRENCE
LMRC RAIL TRAIL

STATE	FED. AID PROJ. NO.	SHEET NO.	TOTAL SHEETS
MA	CMQ-003S(733)X	35	245
PROJECT FILE NO.	608930		

CURB TIE & GRADING PLANS - 6 OF 16

608930_HDBA(CURB TIE & GRADING).DWG Plotted on 7-Sep-2024 12:34 AM

LAWRENCE RAIL TRAIL B BL CONSTRUCTION BASELINE DATA								
NUMBER	STARTING STATION	NORTHING	EASTING	CURVE DATA	LINE DATA	ENDING STATION	NORTHING	EASTING
C11	33+75.33	3081969.2373	745093.6938	R=620.00' Δ=30°19'49" L=328.21' T=168.05'		37+03.53	3082166.6962	744836.3289
C12	37+03.53	3082166.6962	744836.3289	R=1550.00' Δ=10°00'15" L=270.64' T=135.66'		39+74.17	3082366.4851	744654.2781
L6	39+74.17	3082366.4851	744654.2781		N47°20'32"W 827.94'	48+02.11	3082927.5126	744045.3968

LOWELL STREET CONSTRUCTION BASELINE DATA								
NUMBER	STARTING STATION	NORTHING	EASTING	CURVE DATA	LINE DATA	ENDING STATION	NORTHING	EASTING
L17	508+00.00	3082332.0715	744338.0310		N58°30'21"E 600.00'	514+00.00	3082645.5191	744849.6466

Survey Traverse Point Table						
Point #	Northing	Easting	Elevation	Raw Description	Station	Offset
16	3082276.1730	744750.2506	50.767	MTRV HT	38+42.52	4.2' RT
17	3082411.3880	744603.4597	51.474	MTRV HT	40+41.89	1.4' LT
18	3082537.1470	744471.2394	52.147	MTRV MAG	42+24.35	1.5' RT

N/F
GANGI REALTY CORPORATION
BK/PG -/-
19 WINTER STREET
PL 5746
165-33

N/F
THE 620 ESSEX STREET LLC
BK/PG 14245/39
27 WINTER STREET
PL 15028
166-70

N/F
MERRIMACK STREET LLC
BK/PG 15698/44
33-37 WINTER STREET
166-69

N/F
WILLIAM J. MATTHES, JR.
1881/213
292 LOWELL ST
166-66

N/F
ZACHARY MACARO
BK/PG 11843/318
285 LOWELL ST
PL 1011
166-30

N/F
436 SOUTH UNION REALTY TRUST
BK/PG 16629/144
291 LOWELL ST
PL 1011
166-29

N/F
FULTON STREET CORPORATION
BK/PG 3936/289
REAR 92-98 BROADWAY
PL 4226
166-51

N/F
MASSACHUSETTS BAY TRANSPORTATION AUTHORITY
BK/PG 1299/162
LOWELL STREET
166-65

N/F
DAVID A. BIDER & SYLVIA M. BIDER
BK/PG 3161/316
278 LOWELL ST
PL 7005
166-64

N/F
DAVID A. BIDER & SYLVIA M. BIDER
BK/PG 3161/316
274-276 LOWELL ST
166-63

N/F
FULTON STREET CORPORATION
BK/PG 3936/289
REAR 617 COMMON STREET
166-58

N/F
THE 290 LOWELL STREET REALTY TRUST
BK/PG 4694/65
270-272 LOWELL ST
166-62

N/F
283 LOWELL STREET LAWRENCE, LLC
BK/PG 12763/126
283 LOWELL ST
166-31

LOWELL STREET
(PUBLIC - 50.0' WIDE)

1853 CITY LAYOUT

509 510 511 512

16
N: 3082276.173'
E: 744750.251'
EL: 50.767'
HT

17
N: 3082411.388'
E: 744603.460'
EL: 51.474'
HT

18
N: 3082537.147'
E: 744471.239'
EL: 52.147'
MAG

???? LOWELL STREET=
???? LAWRENCE RAIL TRAIL B BL

FOR LOWELL STREET GRADING, SEE SHEET 45

CONTINUED ON SHEET NO. 34

CONTINUED ON SHEET NO. 36

RR VAL MAP SEC. 7.4-1

CONST ℄

PT +74.17

+41.89

S10°04'16"E 48.94' (OMH)

N57°48'18"W 163.35' (TO OMH)

S47°31'17"W 4.21' (TO BL)

S47°21'02"E 199.58' (TO 17)

N66°26'44"W 30.16' (TO UPL)

N42°39'28"E 1.41'(TO BL)

N7°44'48"E 65.87' (TO ULT)

S45°51'33"E 177.95' (TO 16)

N37°34'21"W 183.38' (TO UPL)

S45°51'33"E 177.95' (TO 15)

N37°34'21"W 183.38' (TO UPL)

N36°33'45"E 26.66' (TO UPL)

S24°20'58"E 125.40' (TO UPL)

N66°18'20"W 45.52' (TO UPL)

S42°39'28"W 1.48' (TO BL)

S46°26'05"E 182.48' (TO 18)

S46°26'05"E 182.48' (TO 17)

0 20 50 100

SCALE: 1" = 20'

LAWRENCE
LMRC RAIL TRAIL

STATE	FED. AID PROJ. NO.	SHEET NO.	TOTAL SHEETS
MA	CMQ-003S(733)X	36	245
PROJECT FILE NO.	608930		

CURB TIE & GRADING PLANS - 7 OF 16

608930_HD6A(CURB TIE & GRADING).DWG Plotted on 7-Sep-2024 12:34 AM

LAWRENCE RAIL TRAIL B BL CONSTRUCTION BASELINE DATA								
NUMBER	STARTING STATION	NORTHING	EASTING	CURVE DATA	LINE DATA	ENDING STATION	NORTHING	EASTING
L6	39+74.17	3082366.4851	744654.2781		N47°20'32"W 827.94'	48+02.11	3082927.5126	744045.3968
C13	48+02.11	3082927.5126	744045.3968	R=140.00' Δ=24°30'41" L=59.89' T=30.41'		48+62.00	3082957.5915	743994.1329

Survey Traverse Point Table						
Point #	Northing	Easting	Elevation	Raw Description	Station	Offset
18	3082537.1470	744471.2394	52.147	MTRV MAG	42+24.35	1.5' RT
19	3082659.3320	744336.0777	52.988	MTRV MAG	44+06.54	0.3' LT
20	3082801.6400	744183.0308	54.419	MTRV MAG	46+15.52	0.7' RT

N/F
436 SOUTH UNION REALTY TRUST
BK/PG 16629/144
291 LOWELL ST
PL 1011
166–29

N/F
HECTOR B. CHECO
BK/PG 16108/310
17 MORTON ST
166–21

N/F
GLADYS A. GORDON
BK/PG 15802/220
21 MORTON ST
166–20

N/F
MASSACHUSETTS BAY TRANSPORTATION AUTHORITY
BK/PG 1299/162
HAVERHILL STREET
167–2

N/F
DAKE, LLC
BK/PG 9501/326
27–31 MORTON ST
PL 4418
166–19

N/F
LAWRENCE HOUSING AUTHORITY
BK/PG –/–
33–47 MORTON ST
166–18

RR VAL MAP SEC. 7.4–1

RR VAL MAP SEC. 7.4–2

S24°20'58"E
125.40' (TO UPL)

N66°18'20"W
45.52' (TO UPL)

S41°58'46"E
139.75' (TO UPL)

N61°57'07"W
52.25' (TO UPL)

S42°14'47"E
159.05' (UPL)

S42°39'28"W
0.69' (TO BL)

N73°42'28"W
30.01' (TO UPL)

UPL 8827

UPL 8228

UPL 8829

CONTINUED ON SHEET NO. 35

CONTINUED ON SHEET NO. 37

53.48 +24.35 L6 53.39 53.73 43 53.64 53.98 53.89 54.23 44 54.14 54.39 54.48 54.72 54.63 45 CONST ℄ 54.97 54.88 54.79 +15.52 55.22 46 55.13 55.04 20 55.47 55.38 55.29 55.72 47 55.63 55.54 56.02 55.93 55.84 PC +02.11 56.69 56.60 48 C13 56.51

53.30 18 53.55 53.80 54.05 19 +06.54 54.30 54.54

S42°39'28"W
1.48' (TO BL)

S47°53'12"E
182.20' (TO 19)

N42°39'28"E
0.25' (TO BL)

S47°04'56"E
208.99' (TO 20)

S44°30'32"E
195.51' (TO 21)

CLF

RR VAL MAP SEC. 7.4–1

CLF

RR VAL MAP SEC. 7.4–2

18
N: 3082537.147'
E: 744471.239'
EL: 52.147'
MAG

19
N: 3082659.332'
E: 744336.078'
EL: 52.988'
MAG

20
N: 3082801.640'
E: 744183.031'
EL: 54.419'
MAG

S46°26'05"E
182.48' (TO 17)

N/F
283 LOWELL STREET LAWRENCE, LLC
BK/PG 12763/126
283 LOWELL ST
166–31

CLYDE LANE (PRIVATE)

OLIVER PLACE (PRIVATE)

OLIVER PLACE (PRIVATE)

N/F
MONICAH M. MARSH
BK/PG 14131/253
10–14 BRADFORD PLACE
166–40

N/F
CITY OF LAWRENCE
BK/PG 10095/356
8 BRADFORD PLACE
166–41

N/F
5–9 MILL STREET, LLC
BK/PG 15947/238
135 BRADFORD
167–1

0 20 50 100

SCALE: 1" = 20'

LAWRENCE
LMRC RAIL TRAIL

STATE	FED. AID PROJ. NO.	SHEET NO.	TOTAL SHEETS
MA	CMQ-003S(733)X	37	245
PROJECT FILE NO.	608930		

CURB TIE & GRADING PLANS - 8 OF 16

608930_HD0A(CURB TIE & GRADING).DWG Plotted on 7-Sep-2024 12:35 AM

LAWRENCE RAIL TRAIL B BL CONSTRUCTION BASELINE DATA								
NUMBER	STARTING STATION	NORTHING	EASTING	CURVE DATA	LINE DATA	ENDING STATION	NORTHING	EASTING
L6	39+74.17	3082366.4851	744654.2781		N47°20'32"W 827.94'	48+02.11	3082927.5126	744045.3968
C13	48+02.11	3082927.5126	744045.3968	R=140.00' Δ=24°30'41" L=59.89' T=30.41'		48+62.00	3082957.5915	743994.1329
C14	48+62.00	3082957.5915	743994.1329	R=30.00' Δ=43°26'48" L=22.75' T=11.95'		48+84.75	3082971.8276	743977.0885
L7	48+84.75	3082971.8276	743977.0885		N28°24'24"W 114.36'	49+99.11	3083072.4178	743922.6841
C15	49+99.11	3083072.4178	743922.6841	R=45.00' Δ=40°39'22" L=31.93' T=16.67'		50+31.04	3083093.0388	743899.1830
C16	50+31.04	3083093.0388	743899.1830	R=250.00' Δ=30°49'42" L=134.51' T=68.93'		51+65.56	3083171.8114	743792.1481
C17	51+65.56	3083171.8114	743792.1481	R=750.00' Δ=19°21'21" L=253.37' T=127.90'		54+18.92	3083340.8277	743605.0123

Curve Table				
Curve #	Length	Direction/Delta	Radius	Tangent
C14	6.01'	34°24'41"	10.00'	3.10'
C15	6.01'	34°24'41"	10.00'	3.10'
C16	5.55'	31°47'18"	10.00'	2.85'
C17	5.55'	31°47'18"	10.00'	2.85'
C18	7.23'	41°24'35"	10.00'	3.78'
C19	7.23'	41°24'35"	10.00'	3.78'
C20	7.23'	41°24'36"	10.00'	3.78'
C21	7.23'	41°24'36"	10.00'	3.78'

Survey Traverse Point Table						
Point #	Northing	Easting	Elevation	Raw Description	Station	Offset
21	3082941.0680	744045.9728	55.983	MTRV MAG	48+10.19	10.6' RT
22	3083066.9860	743901.1765	58.047	MTRV XMARK	50+09.30	20.9' LT
23	3083196.7030	743759.5381	58.240	MTRV MAG	52+05.73	9.1' LT

HAVERHILL STREET BL CONSTRUCTION BASELINE DATA								
NUMBER	STARTING STATION	NORTHING	EASTING	CURVE DATA	LINE DATA	ENDING STATION	NORTHING	EASTING
L18	100+00.00	3082971.9151	743852.7045		N61°35'36"E 250.00'	102+50.00	3083090.8472	744072.6025

0 20 50 100

SCALE: 1" = 20'

LAWRENCE
LMRC RAIL TRAIL

STATE	FED. AID PROJ. NO.	SHEET NO.	TOTAL SHEETS
MA	CMQ-003S(733)X	38	245
PROJECT FILE NO.	608930		

CURB TIE & GRADING PLANS - 9 OF 16

608930_HD6A(CURB TIE & GRADING).DWG Plotted on 7-Sep-2024 12:36 AM

Survey Traverse Point Table						
Point #	Northing	Easting	Elevation	Raw Description	Station	Offset
24	3083313.2420	743625.8036	58.772	MTRV MAG	53+86.00	11.4' LT
25	3083433.3390	743495.8352	59.576	MTRV MAG	55+62.15	12.1' RT
26	3083560.3640	743370.9520	60.930	MTRV MAG	57+42.41	21.9' RT

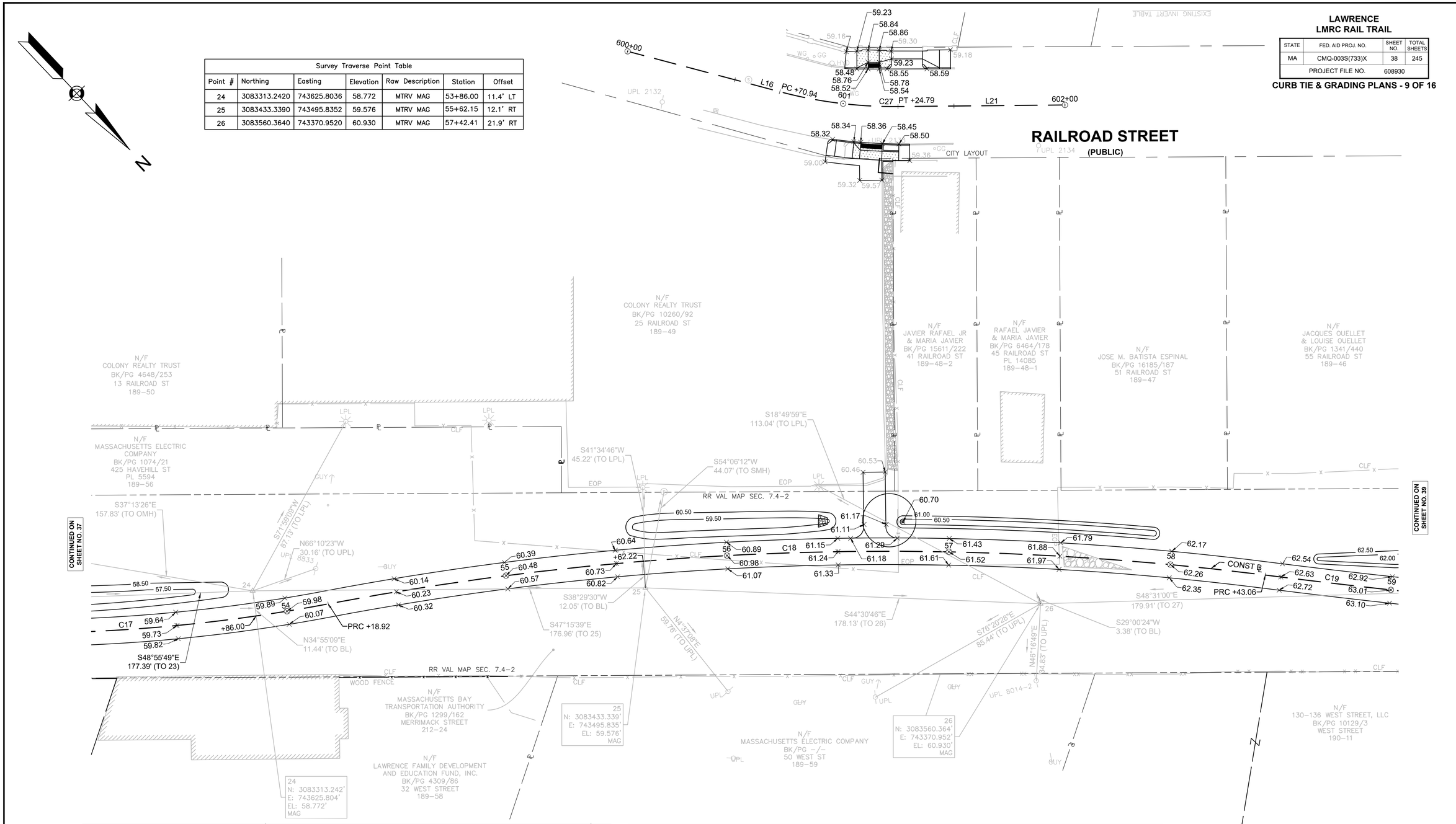

LAWRENCE RAIL TRAIL B BL CONSTRUCTION BASELINE DATA								
NUMBER	STARTING STATION	NORTHING	EASTING	CURVE DATA	LINE DATA	ENDING STATION	NORTHING	EASTING
C17	51+65.56	3083171.8114	743792.1481	R=750.00' Δ=19°21'21" L=253.37' T=127.90'		54+18.92	3083340.8277	743605.0123
C18	54+18.92	3083340.8277	743605.0123	R=1350.00' Δ=18°00'04" L=424.14' T=213.83'		58+43.06	3083620.2199	743288.2177
C19	58+43.06	3083620.2199	743288.2177	R=3350.00' Δ=11°19'45" L=662.39' T=332.28'		65+05.46	3084085.7638	742818.5302

RAILROAD STREET CONSTRUCTION BASELINE DATA								
NUMBER	STARTING STATION	NORTHING	EASTING	CURVE DATA	LINE DATA	ENDING STATION	NORTHING	EASTING
L16	600+00.00	3083251.4097	743336.1820		N31°56'52"W 70.94'	600+70.94	3083311.6060	743298.6433
C27	600+70.94	3083311.6060	743298.6433	R=200.00' Δ=15°25'33" L=53.85' T=27.09'		601+24.79	3083352.9341	743264.3798
L21	601+24.79	3083352.9341	743264.3798		N47°22'26"W 75.21'	602+00.00	3083403.8682	743209.0402

LAWRENCE
LMRC RAIL TRAIL

STATE	FED. AID PROJ. NO.	SHEET NO.	TOTAL SHEETS
MA	CMQ-003S(733)X	39	245
PROJECT FILE NO.	608930		

CURB TIE & GRADING PLANS - 10 OF 16

RAILROAD STREET
(PUBLIC)

CITY LAYOUT

CITY LAYOUT

N/F
JACQUES OUELLET
& LOUISE OUELLET
BK/PG 1341/440
55 RAILROAD ST
189–46

N/F
JOHN SHEA CO
BK/PG –/–
RAILROAD STREET
189–44

N/F
57–71 RAILROAD STREET
CONDOMINIUM
MASTER DEED
BK/PG 3301/42
57–71 RAILROAD STREET
189–1

N/F
SOKIA PHY &
SOPHORN PHY
MASTER DEED
BK/PG 15225/303
73–75 RAILROAD STREET
190–10

N/F
SOKIA PHY &
SOPHORN PHY
MASTER DEED
BK/PG 15225/303
73–75 RAILROAD STREET
190–10

N/F
MASSACHUSETTS BAY
TRANSPORTATION AUTHORITY
BK/PG 1299/162
MERRIMACK STREET
212–24

N/F
OBIPIO ORTEGA GONZALES
& LOURDES ORTEGA
BK/PG 16437/50
81 RAILROAD ST
190–8

N/F
JOSHUA V. ARIAS
BK/PG 12921/222
83–87 RAILROAD ST
190–7

N/F
HECTOR R. CID &
ALTAGRACIA CID
BK/PG 13837/207
89 RAILROAD ST
190–6

N/F
MARIA VENTURA
BK/PG 11988/44
91–93 RAILROAD ST
190–5

N/F
HUDELSE O PERALTA
BK/PG 15321/282
97 RAILROAD ST
190–4

N/F
LUZ M. ANDUJAR &
CRITIAN MANUEL GARCIA
BK/PG 10051/321
97 ½ RAILROAD ST
190–3–2

S83°57'28"E
60.48' (TO 33)

S69°56'34"W
10.81' (TO HH)

VZ(MCI)
HANDHOLE(REC)

N63°00'12"W
44.50' (TO UPL)

S85°32'19"W
56.35' (TO UPL)

28
N: 3083802.262'
E: 743098.613'
EL: 63.510'
MAG

30
N: 3083922.963'
E: 742968.618'
EL: 64.994'
MAG

S1°37'52"E
77.90' (TO UPL)

CLF

RR VAL MAP SEC. 7.4–2

N64°49'19"W
37.64' (TO BOLLARD)

S41°32'39"E
120.79' (TO UPL)

S30°47'56"E
73.23' (TO BOLLARD)

N58°43'44"W
58.37' (TO UPL)

BENCHMARK: TBM E
EL=65.58'

S47°07'23"E
177.39' (TO 30)

N54°58'49"W
83.54' (TO UPL)

S48°15'43"E
184.34' (TO 28)

S32°37'41"E
150.92' (TO UPL)

MCI BOLLARD

UPC 8014

UPC 8015

UPC 8016

AT&T BOLLARD

CONTINUED ON SHEET NO. 38

CONTINUED ON SHEET NO. 40

62.54 62.50 62.00
62.63 C19 62.92 59
62.72 63.01 +21.91 27
63.10 63.38 63.29
63.47
63.66 60 63.75
63.84
CONST ℄
62.50 62.00
64.04 64.41
64.13 64.50 61
64.21 64.59
64.79 64.80
64.88 C19 62 65.16 +49.05 65.54
65.02 65.25 65.63 +84.47 65.72
65.42
64.50 63.50
28
30
N42°51'36"E
24.53' (TO BL)
65.50 65.00
63 66.00 +06.78 66.09
66.38 ??? 66.29
66.66 64 C19 +20.94
66.75
66.84

N49°03'39"E
1.38' (TO BL)

N45°54'48"E
19.85' (TO BL)

CLF

RR VAL MAP SEC. 7.4–2

N/F
130–136 WEST STREET, LLC
BK/PG 10129/3
WEST STREET
190–11

27
N: 3083679.539'
E: 743236.169'
EL: 62.172'
HT

N/F
130–136 WEST STREET, LLC
LCC NO 19576A
CERT NO 15412
DOC NO 91700
WEST STREET
MAP/LOT 190/15

N/F
JE ENTERPRISE INC.
BK/PG 15389/123
142 WEST STREET
190–17

S43°27'57"W
45.18' (TO BL)

78.24' (TO 30)
N70°10'08"E

29
N: 3083949.421'
E: 743042.133'
EL: 58.760'
HT

S42°28'42"W
175.08' (TO BL)

N0°00'00"E
200.90' (TO 31)

N18°18'43"E
142.93' (TO 31)

S44°41'48"E
185.94' (TO 33)

N29°18'43"W
144.28' (TO 32)

S40°31'33"W
22.44' (TO BL)

S79°05'58"W
192.61' (TO 32)

N/F
CITY OF LAWRENCE
(SERGEANT LUCIEN E.
BOURGOIN SQUARE PARK)
BK/PG 581/323
BK/PG 650/548
WEST STREET
190–18

31
N: 3084085.193'
E: 743087.123'
EL: 56.839'
MAG

32
N: 3084048.750'
E: 742897.919'
EL: 64.202'
MAG

BOURGOIN SQUARE PARK

0 20 50 100
SCALE: 1" = 20'

Survey Traverse Point Table						
Point #	Northing	Easting	Elevation	Raw Description	Station	Offset
27	3083679.5390	743236.1694	62.172	MTRV HT	59+21.91	1.4' LT
28	3083802.2620	743098.6127	63.510	MTRV MAG	61+05.93	19.9' LT
29	3083949.4210	743042.1332	58.760	MTRV HT	62+49.04	45.0' RT
30	3083922.9630	742968.6185	64.994	MTRV MAG	62+84.47	24.5' LT
31	3084085.1930	743087.1232	56.839	MTRV MAG	63+06.78	175.1' RT
32	3084048.7500	742897.9187	64.202	MTRV MAG	64+20.95	22.4' RT

LAWRENCE RAIL TRAIL B BL CONSTRUCTION BASELINE DATA								
NUMBER	STARTING STATION	NORTHING	EASTING	CURVE DATA	LINE DATA	ENDING STATION	NORTHING	EASTING
C19	58+43.06	3083620.2199	743288.2177	R=3350.00' Δ=11°19'45" L=662.39' T=332.28'		65+05.46	3084085.7638	742818.5302

608930_HD6A(CURB TIE & GRADING).DWG Plotted on 7-Sep-2024 12:36 AM

LAWRENCE
LMRC RAIL TRAIL

STATE	FED. AID PROJ. NO.	SHEET NO.	TOTAL SHEETS
MA	CMQ-003S(733)X	40	245
PROJECT FILE NO.	608930		

CURB TIE & GRADING PLANS - 11 OF 16

Survey Traverse Point Table						
Point #	Northing	Easting	Elevation	Raw Description	Station	Offset
33	3084055.1350	742837.8385	68.181	MTRV MAG	64+70.97	11.4' LT
34	3084161.3440	742723.5567	67.184	MTRV MAG	66+26.69	2.8' LT
35	3084282.6950	742587.0537	68.887	MTRV MAG	68+09.22	3.3' LT

LAWRENCE RAIL TRAIL B BL CONSTRUCTION BASELINE DATA								
NUMBER	STARTING STATION	NORTHING	EASTING	CURVE DATA	LINE DATA	ENDING STATION	NORTHING	EASTING
C19	58+43.06	3083620.2199	743288.2177	R= 3350.00' Δ= 11°19'45" L=662.39' T=332.28'		65+05.46	3084085.7638	742818.5302
C20	65+05.46	3084085.7638	742818.5302	R= 4500.00' Δ= 13°25'07" L=1053.90' T=529.37'		75+59.35	3084839.4715	742085.3496

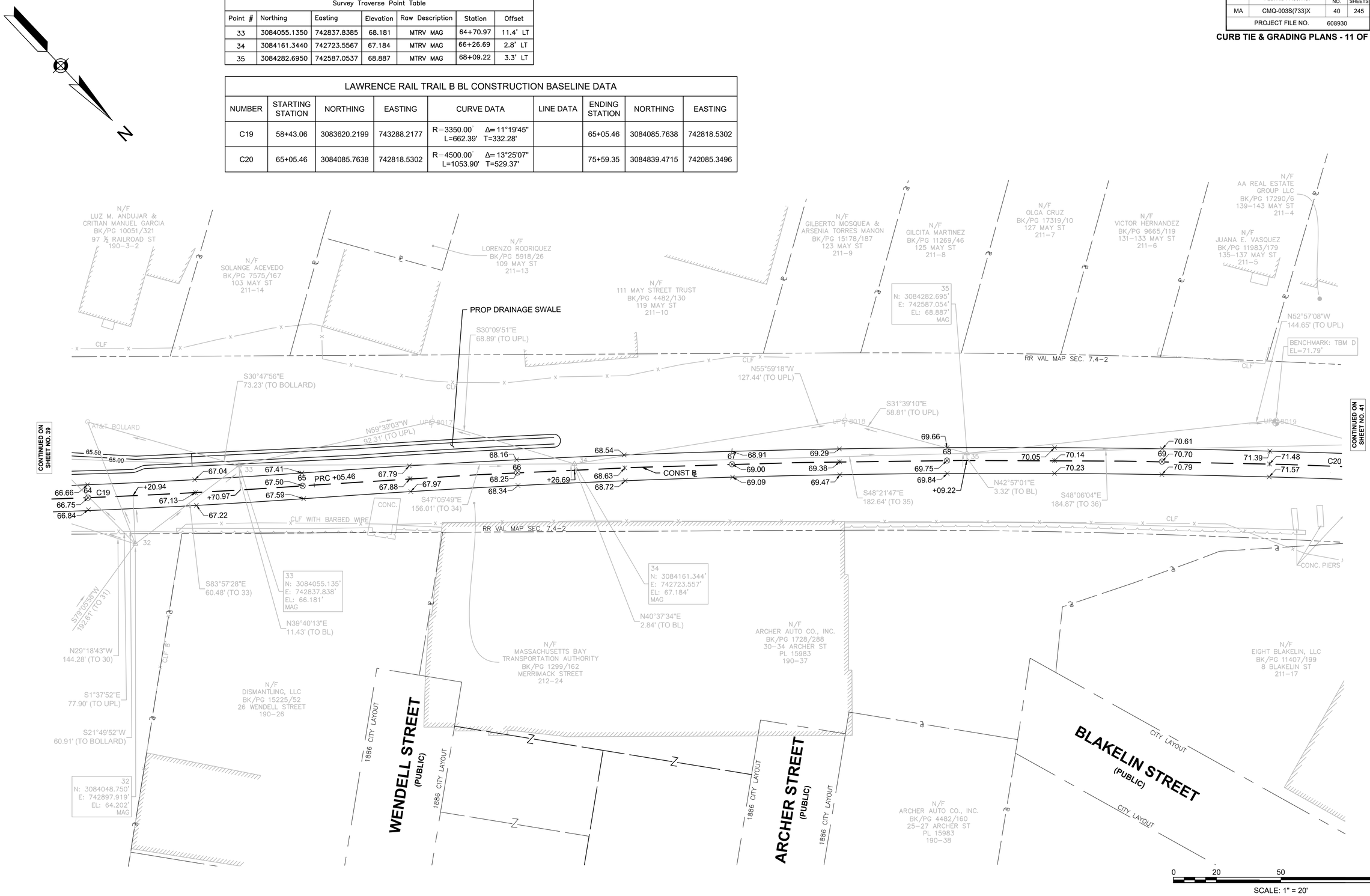

608930_HD6A(CURB TIE & GRADING).DWG Plotted on 7-Sep-2024 12:36 AM

LAWRENCE
LMRC RAIL TRAIL

STATE	FED. AID PROJ. NO.	SHEET NO.	TOTAL SHEETS
MA	CMQ-003S(733)X	41	245
PROJECT FILE NO.	608930		

CURB TIE & GRADING PLANS - 12 OF 16

LAWRENCE RAIL TRAIL B BL CONSTRUCTION BASELINE DATA								
NUMBER	STARTING STATION	NORTHING	EASTING	CURVE DATA	LINE DATA	ENDING STATION	NORTHING	EASTING
C20	65+05.46	3084085.7638	742818.5302	R=4500.00' Δ=13°25'07" L=1053.90' T=529.37'		75+59.35	3084839.4715	742085.3496

MANCHESTER STREET CONSTRUCTION BASELINE DATA								
NUMBER	STARTING STATION	NORTHING	EASTING	CURVE DATA	LINE DATA	ENDING STATION	NORTHING	EASTING
L19	10+00.00	3084703.9874	742114.4802		N79°01'21"E 102.51'	11+02.51	3084723.5086	742215.1191
C59	11+02.51	3084723.5086	742215.1191	R=500.00' Δ=6°50'55" L=59.77' T=29.92'		11+62.28	3084738.3646	742272.9719
L20	11+62.28	3084738.3646	742272.9719		N72°10'26"E 87.72'	12+50.00	3084765.2182	742356.4804

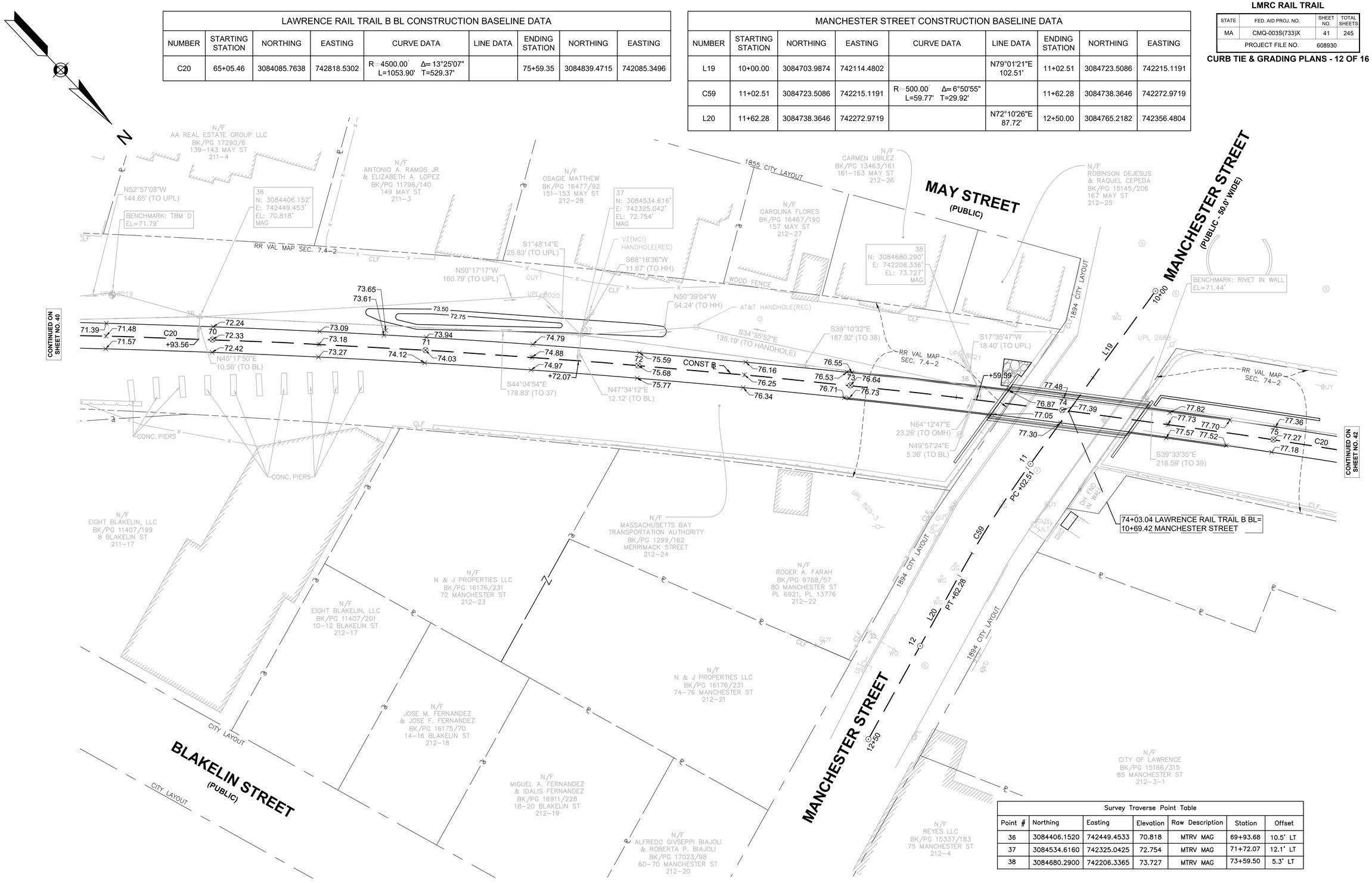

Survey Traverse Point Table						
Point #	Northing	Easting	Elevation	Raw Description	Station	Offset
36	3084406.1520	742449.4533	70.818	MTRV MAG	69+93.68	10.5' LT
37	3084534.6160	742325.0425	72.754	MTRV MAG	71+72.07	12.1' LT
38	3084680.2900	742206.3365	73.727	MTRV MAG	73+59.50	5.3' LT

0 20 50 100

SCALE: 1" = 20'

608930_HD6A(CURB TIE & GRADING).DWG Plotted on 7-Sep-2024 12:37 AM

LAWRENCE
LMRC RAIL TRAIL

STATE	FED. AID PROJ. NO.	SHEET NO.	TOTAL SHEETS
MA	CMQ-003S(733)X	42	245
	PROJECT FILE NO. 608930		

CURB TIE & GRADING PLANS - 13 OF 16

608930_HD6A(CURB TIE & GRADING).DWG Plotted on 7-Sep-2024 12:38 AM

MANCHESTER STREET PARK BL CONSTRUCTION BASELINE DATA								
NUMBER	STARTING STATION	NORTHING	EASTING	CURVE DATA	LINE DATA	ENDING STATION	NORTHING	EASTING
L13	400+00.00	3085304.3065	741772.0373		N31°14'40"E 27.18'	400+27.18	3085327.5407	741786.1331
C25	400+27.18	3085327.5407	741786.1331	R=55.00' Δ=73°42'47" L=70.76' T=41.23'		400+97.94	3085352.1493	741847.3515
L14	400+97.94	3085352.1493	741847.3515		S75°02'33"E 62.06'	401+60.00	3085336.1304	741907.3135

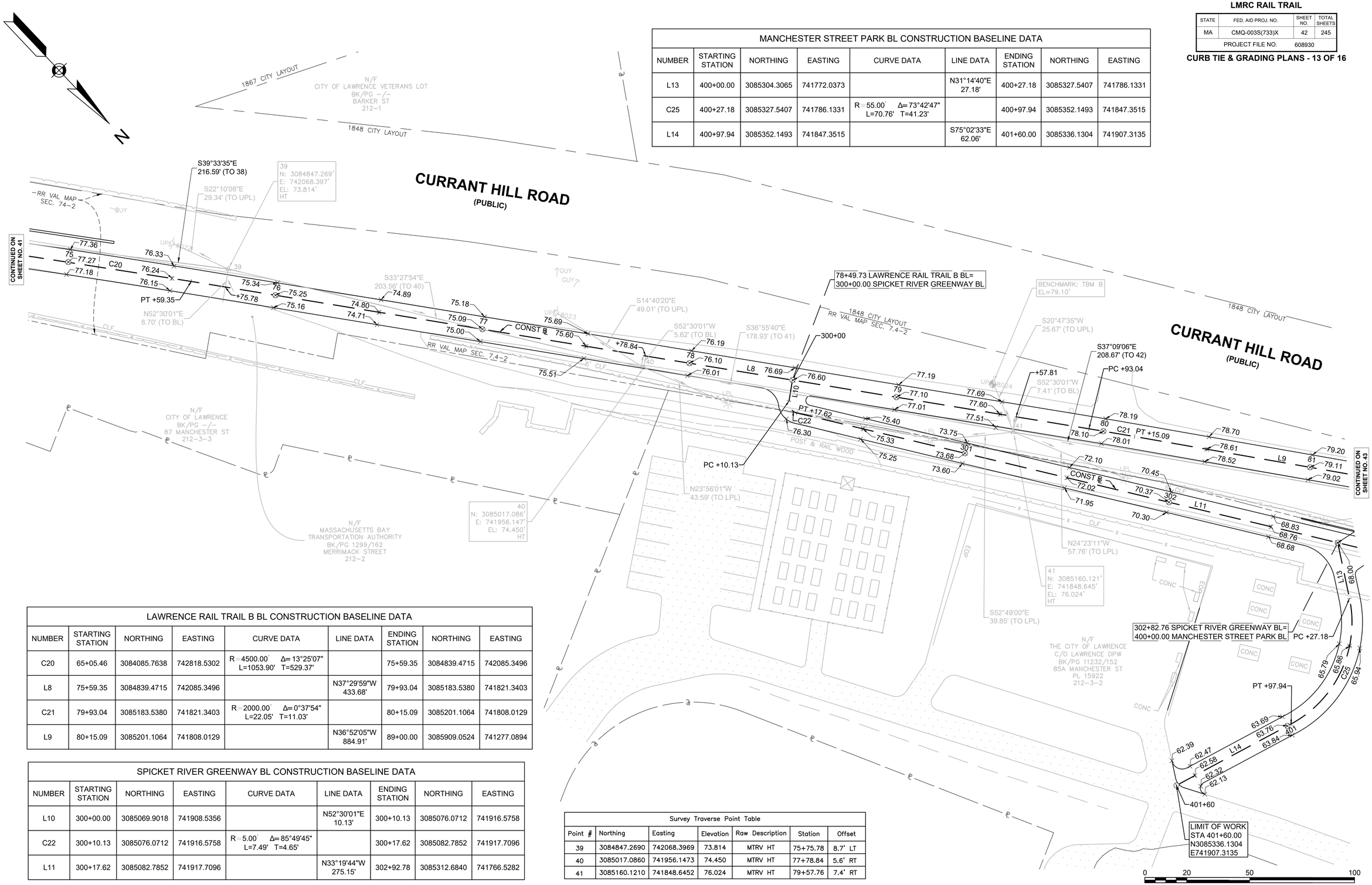

LAWRENCE RAIL TRAIL B BL CONSTRUCTION BASELINE DATA								
NUMBER	STARTING STATION	NORTHING	EASTING	CURVE DATA	LINE DATA	ENDING STATION	NORTHING	EASTING
C20	65+05.46	3084085.7638	742818.5302	R=4500.00' Δ=13°25'07" L=1053.90' T=529.37'		75+59.35	3084839.4715	742085.3496
L8	75+59.35	3084839.4715	742085.3496		N37°29'59"W 433.68'	79+93.04	3085183.5380	741821.3403
C21	79+93.04	3085183.5380	741821.3403	R=2000.00' Δ=0°37'54" L=22.05' T=11.03'		80+15.09	3085201.1064	741808.0129
L9	80+15.09	3085201.1064	741808.0129		N36°52'05"W 884.91'	89+00.00	3085909.0524	741277.0894

SPICKET RIVER GREENWAY BL CONSTRUCTION BASELINE DATA								
NUMBER	STARTING STATION	NORTHING	EASTING	CURVE DATA	LINE DATA	ENDING STATION	NORTHING	EASTING
L10	300+00.00	3085069.9018	741908.5356		N52°30'01"E 10.13'	300+10.13	3085076.0712	741916.5758
C22	300+10.13	3085076.0712	741916.5758	R=5.00' Δ=85°49'45" L=7.49' T=4.65'		300+17.62	3085082.7852	741917.7096
L11	300+17.62	3085082.7852	741917.7096		N33°19'44"W 275.15'	302+92.78	3085312.6840	741766.5282

Survey Traverse Point Table						
Point #	Northing	Easting	Elevation	Raw Description	Station	Offset
39	3084847.2690	742068.3969	73.814	MTRV HT	75+75.78	8.7' LT
40	3085017.0860	741956.1473	74.450	MTRV HT	77+78.84	5.6' RT
41	3085160.1210	741848.6452	76.024	MTRV HT	79+57.76	7.4' RT

LAWRENCE
LMRC RAIL TRAIL

STATE	FED. AID PROJ. NO.	SHEET NO.	TOTAL SHEETS
MA	CMQ-003S(733)X	43	245
PROJECT FILE NO.	608930		

CURB TIE & GRADING PLANS - 14 OF 16

608930_HD6A(CURB TIE & GRADING).DWG Plotted on 7-Sep-2024 12:38 AM

Survey Traverse Point Table						
Point #	Northing	Easting	Elevation	Raw Description	Station	Offset
42	3085326.4390	741722.6238	79.309	MTRV HT	81+66.51	6.9' RT
43	3085472.0960	741613.0323	79.961	MTRV HT	83+48.79	6.6' RT
44	3085624.8650	741481.9987	81.222	MTRV REBAR	85+49.63	6.5' LT

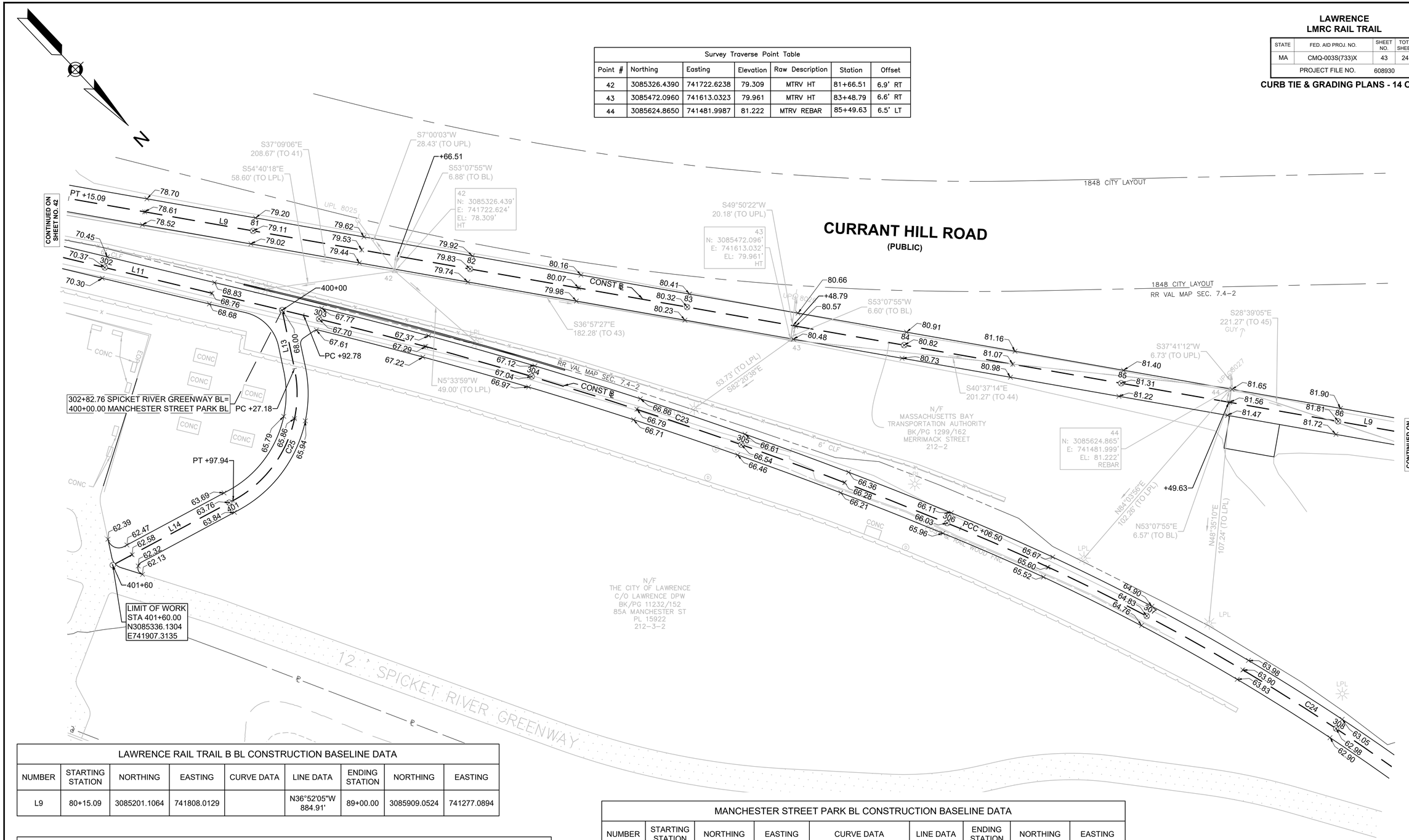

LAWRENCE RAIL TRAIL B BL CONSTRUCTION BASELINE DATA								
NUMBER	STARTING STATION	NORTHING	EASTING	CURVE DATA	LINE DATA	ENDING STATION	NORTHING	EASTING
L9	80+15.09	3085201.1064	741808.0129		N36°52'05"W 884.91'	89+00.00	3085909.0524	741277.0894

SPICKET RIVER GREENWAY BL CONSTRUCTION BASELINE DATA								
NUMBER	STARTING STATION	NORTHING	EASTING	CURVE DATA	LINE DATA	ENDING STATION	NORTHING	EASTING
L11	300+17.62	3085082.7852	741917.7096		N33°19'44"W 275.15'	302+92.78	3085312.6840	741766.5282
C23	302+92.78	3085312.6840	741766.5282	R=2000.00' Δ=8°59'15" L=313.72' T=157.18'		306+06.50	3085587.2285	741615.3768
C24	306+06.50	3085587.2285	741615.3768	R=1000.00' Δ=16°30'12" L=288.04' T=145.02'		308+94.54	3085863.0277	741535.8253

MANCHESTER STREET PARK BL CONSTRUCTION BASELINE DATA								
NUMBER	STARTING STATION	NORTHING	EASTING	CURVE DATA	LINE DATA	ENDING STATION	NORTHING	EASTING
L13	400+00.00	3085304.3065	741772.0373		N31°14'40"E 27.18'	400+27.18	3085327.5407	741786.1331
C25	400+27.18	3085327.5407	741786.1331	R=55.00' Δ=73°42'47" L=70.76' T=41.23'		400+97.94	3085352.1493	741847.3515
L14	400+97.94	3085352.1493	741847.3515		S75°02'33"E 62.06'	401+60.00	3085336.1304	741907.3135

0 20 50 100
SCALE: 1" = 20'

LAWRENCE
LMRC RAIL TRAIL

STATE	FED. AID PROJ. NO.	SHEET NO.	TOTAL SHEETS
MA	CMQ-003S(733)X	44	245
PROJECT FILE NO.	608930		

CURB TIE & GRADING PLANS - 15 OF 16

608930_HD6A(CURB TIE & GRADING).DWG Plotted on 7-Sep-2024 12:39 AM

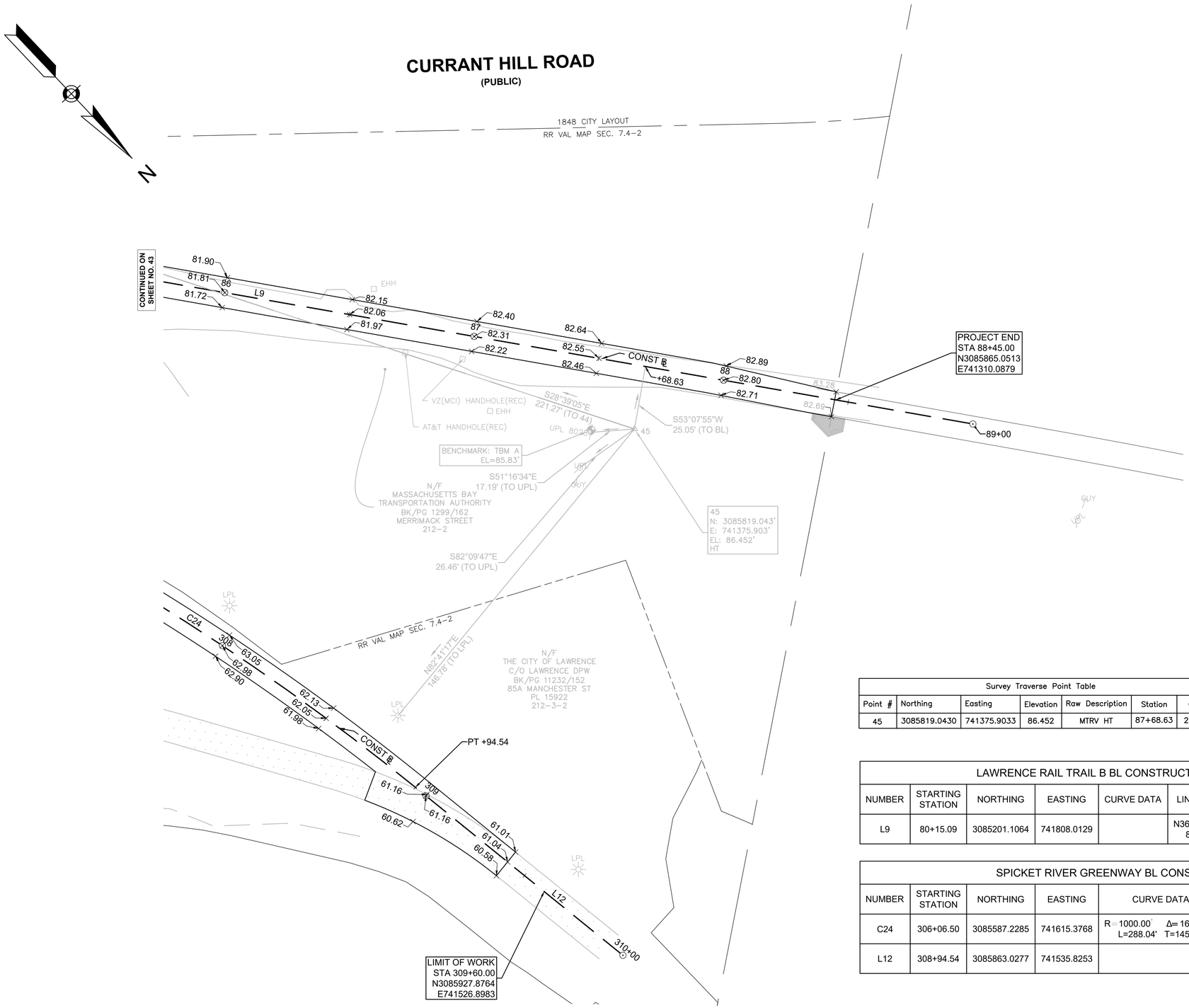

Survey Traverse Point Table						
Point #	Northing	Easting	Elevation	Raw Description	Station	Offset
45	3085819.0430	741375.9033	86.452	MTRV HT	87+68.63	25.1' RT

LAWRENCE RAIL TRAIL B BL CONSTRUCTION BASELINE DATA								
NUMBER	STARTING STATION	NORTHING	EASTING	CURVE DATA	LINE DATA	ENDING STATION	NORTHING	EASTING
L9	80+15.09	3085201.1064	741808.0129		N36°52'05"W 884.91'	89+00.00	3085909.0524	741277.0894

SPICKET RIVER GREENWAY BL CONSTRUCTION BASELINE DATA								
NUMBER	STARTING STATION	NORTHING	EASTING	CURVE DATA	LINE DATA	ENDING STATION	NORTHING	EASTING
C24	306+06.50	3085587.2285	741615.3768	R=1000.00' Δ=16°30'12" L=288.04' T=145.02'		308+94.54	3085863.0277	741535.8253
L12	308+94.54	3085863.0277	741535.8253		N7°50'17"W 105.46'	310+00.00	3085967.5027	741521.4433

0 20 50 100

SCALE: 1" = 20'

LAWRENCE
LMRC RAIL TRAIL

STATE	FED. AID PROJ. NO.	SHEET NO.	TOTAL SHEETS
MA	CMQ-003S(733)X	45	245
PROJECT FILE NO.	608930		

CURB TIE & GRADING PLAN - 16 OF 16

608930_HD6(CURB TIE & GRADING PLAN).DWG Plotted on 6-Sep-2024 12:56 PM

436 SOUTH UNION REALTY TRUST
BK/PG 16629/144
291 LOWELL ST
MAP/LOT 166/29

BYRON J. RAMIREZ RODRIGUEZ
BK/PG 16383/63
293 LOWELL STREET
MAP/LOT 166/28

ZACHARY MACARO
BK/PG 11843/318
285 LOWELL STREET
MAP/LOT 166/30

283 LOWELL STREET LAWRENCE, LLC
BK/PG 12763/126
283 LOWELL STREET
MAP/LOT 166/31

MASSACHUSETTS BAY TRANSPORTATION AUTHORITY
BK/PG 1299/162
LOWELL STREET
MAP/LOT 167/2

10' STREAMLINE EASEMENT
BK/PG 1581/11
RR VAL MAP SEC. 7.4-1

PROJECT BEGIN
STA 508+75.00
N3082371.2488
E744401.9855

1853 CITY LAYOUT

N37°08'54"E
106.18' (TO GPL)

N17°42'35"W
40.26' (TO WG)

N4°38'49"W
38.36' (TO TMH)

N31°29'39"W
22.54' (TO BL)

N13°58'34"W
5.38' (TO ULT)

S31°29'39"E
160.29' (TO BL)

S25°35'58"E
139.96' (TO TMH)

S17°26'04"E
146.28' (TO WSO)

S8°20'41"E
154.47' (TO GPL)

S45°43'47"W
183.77' (TO 7)

S12°11'25"W
49.63' (TO UPL)

N71°46'58"E
46.59' (TO HYD)

S33°41'59"W
93.87' (TO WG)

S31°29'39"E
14.82' (TO BL)

S60°35'03"W
86.66' (TO 3)

N54°25'49"E
37.96' (TO UPL)

S45°56'07"E
146.83' (TO 7)

PROP RAIL TRAIL WORK
(SEE SHEET 45)

S61°50'23"W
51.08' (TO TMH)

S31°29'39"E
18.10' (TO BL)

S78°39'47"W
9.50' (TO 7)

N61°34'06"E
79.24' (TO WG)

N56°46'37"E
103.17' (TO HYD)

N88°02'16"E
69.09' (TO ULT)

+65.99
OFFSET: 16.87

+35.32
OFFSET: 16.03

+12.90
OFFSET: 16.52

+76.00
OFFSET: 18.13

CONST ℄

LOWELL STREET

LMRC RAIL TRAIL

WINTER STREET

1877 CITY LAYOUT

510+49.07 LOWELL STREET BL =
41+15.40 LAWRENCE RAIL TRAIL BL

14' COMMON PASSAGEWAY
BK/PG 1577/189

PROJECT END
STA 513+75.00
N3082632.4552
E744828.3319

BENCHMARK:
EL=68.85'

BENCHMARK:
EL=64.39'

BENCHMARK:
EL=62.49'

LIMIT OF RESOURCE AREA AS FLAGGED BY NOVER ARMSTRONG ON MARCH 10, 2017. (TYP.)

WILLIAM J. MATTHES, JR.
BK/PG 1571/4
292 LOWELL STREET
MAP/LOT 166/66

WILLIAM J. MATTHES, JR.
BK/PG 1577/189
284-286
LOWELL STREET
MAP/LOT 166/66

MASSACHUSETTS BAY TRANSPORTATION AUTHORITY
BK/PG 1299/162
LOWELL STREET
MAP/LOT 166/65

MASSDOT BRIDGE EASEMENT
BK/PG 1280/493

DAVID A. BIDER & SYLVIA M. BIDER
BK/PG 3161/316
278 LOWELL STREET
MAP/LOT 166/64

FULTON STREET CORPORATION
BK/PG 3936/289
BROADWAY
(REAR OF 92-98)
MAP/LOT 166/51

DAVID A. BIDER & SYLVIA M. BIDER
BK/PG 3161/316
274-276 LOWELL STREET
MAP/LOT 166/63

THE 290 LOWELL STREET REALTY TRUST
BK/PG 4694/65
270-272 LOWELL STREET
MAP/LOT 166/62

FULTON STREET CORPORATION
BK/PG 3936/289
266 LOWELL STREET
MAP/LOT 166/61

FULTON STREET CORPORATION
BK/PG 3936/289
262 LOWELL STREET
MAP/LOT 166/59

RAYPROGRESS, LLC
BK/PG 17116/342
364 LOWELL STREET
MAP/LOT 166/60

RAYPROGRESS, LLC
BK/PG 17116/342
617 REAR
COMMON STREET
MAP/LOT 166/58

Point Table				
Point #	Northing	Easting	Elevation	Raw Description
2	3082475.1342	744543.1722	70.384	MTRV MMAG
3	3082344.9849	744402.2646	63.349	MTRV MMAG
5	3082302.4206	744326.7735	60.078	MTRV TEMP
6	3082575.3849	744428.3492	52.262	MTRV MMAG
7	3082473.2665	744533.8567	51.641	MTRV MMAG

LOWELL STREET CONSTRUCTION BASELINE DATA								
NUMBER	STARTING STATION	NORTHING	EASTING	CURVE DATA	LINE DATA	ENDING STATION	NORTHING	EASTING

0 20 50 100

SCALE: 1" = 20'

LAWRENCE
LMRC RAIL TRAIL

STATE	FED. AID PROJ. NO.	SHEET NO.	TOTAL SHEETS
MA	CMQ-003S(733)X	46	245
PROJECT FILE NO.	608930		

TRAFFIC SIGN & PAVEMENT MARKING PLANS - 1 OF 11

608930_HD7(TSPM).DWG Plotted on 6-Sep-2024 10:25 AM

N

MERRIMACK STREET
(PUBLIC 60.0' WIDE)

SOUTH CANAL

SOUTH BROADWAY (ROUTE 28)
(PUBLIC 66.0' WIDE)

1849 COUNTY LAYOUT

N/F
NUNEZ, LLC
BK/PG 11297/139
5 – 7 MERRIMACK ST
PL 15990
122–26

N/F
ESSEX COMPANY
BK/PG –/–
SOUTH BROADWAY/
MERRIMACK STREET
122–6

NF
CHRISTOS ROGARIS, TRUSTEE OF
J.P. REALTY TRUST
BK/PG 2484/97
8 SOUTH BROADWAY
PL 5660
122–5

N/F
18–20 BROADWAY, LLC
BK/PG 14201/101
2 SOUTH BROADWAY
PL 5660
122–4

N/F
MASSACHUSETTS BAY
TRANSPORTATION
AUTHORITY
BK/PG 1299/162
122–119

N/F
MASSACHUSETTS BAY
TRANSPORTATION AUTHORITY
BK/PG 1299/162
SALEM STREET
121–48

N/F
MERRIMACK STREET, LLC
BK/PG 12934/193
11 MERRIMACK ST
PL 13208
122–23

N/F
CITY OF LAWRENCE
BK/PG 15538/125
7 SOUTH CANAL ST
123–1

N/F
ESSEX COMPANY
BK/PG –/–
PARKER STREET
103–3

PROP SOLAR RRFB W/
W11-15 (2)
W11-15p (2)
W11-7pL
W11-7pR

PROP SOLAR RRFB W/
W11-15 (2)
W11-15p (2)
W11-7pL
W11-7pR

PROJECT BEGIN
STA 0+70
N3080245.3219
E746615.1764

0+50

12' CW

RR VAL MAP SEC. 7.4–1

MRR VAL MAP SEC. 7.4–1

EXISTING RAILROAD

1909 CITY LAYOUT

WOOD FENCE

WOOD POST GUARDRAIL

ELEC 13KV

30' RIGHT OF WAY

CB1

POST & REFLECTOR RET

"NO PARKING" RET

RET "MERRIMACK MOTORS ..."

SW1

STEEL GUARDRAIL

CONC STRUCTURE

R9-6

R9-7a

10' STEAMLINE EASEMENT BK/PG 1581/11

ACCESS AND UTILITY EASEMENT FOR THE BENEFIT OF ESSEX COMPANY BK/PG 4099/213

1 2 3 4 5

NOTE:
ALL PAVEMENT MARKINGS SHALL BE THERMOPLASTIC, UNLESS OTHERWISE NOTED

0 20 50 100
SCALE: 1" = 20'

LAWRENCE
LMRC RAIL TRAIL

STATE	FED. AID PROJ. NO.	SHEET NO.	TOTAL SHEETS
MA	CMQ-003S(733)X	47	245
PROJECT FILE NO.	608930		

TRAFFIC SIGN & PAVEMENT MARKING PLANS - 2 OF 11

608930_HD7(TSPM).DWG Plotted on 6-Sep-2024 10:25 AM

N

"W10-1 SIGN" RET
"REPORT MALFUNCTION OR RET
EMERGENCY TO 1.800.9559208
CROSSING # 4008355 BROADWAY ST."

RET "RAIL ROAD CROSSING"

BROADWAY - ROUTE 28

1849 COUNTY LAYOUT

RR VAL MAP SEC. 7.4-1

R9-6

R9-7b

GUARDRAIL

EXISTING RAILROAD

10' STEAMLINE EASEMENT
BK/PG 1581/11

11

12

13

N/F
MASSACHUSETTS BAY
TRANSPORTATION AUTHORITY
BK/PG 1299/162
BROADWAY
144-29

N/F
ESSEX COMPANY
BK/PG -/-
ESSEX ST
143-21

MEET EXIST PVMT
MARKINGS

R3-8 (25)
(APPROX. 175' FROM
INTERSECTION AT LOCATION
WHERE TURNING LANES BEGIN)

RET BILLBOARD

R&R R12-5
R&R M6-1

RET "WATER STREET"
RET "BROADWAY"

REM EXIST PVMT MARKINGS
IN CONFLICT WITH PROP (TYP)

1874 CITY LAYOUT

WATER STREET

112+25

112

6" SWL

6" DBYL

11'

11'

12'

12" SL

12" CW

N/F
HODEN FAMILY REALTY, LLC
BK/PG 16201/145
3-5 WATER ST
144-2

N/F
SLEIMAN A. RAMY
BK/PG 7532/159
1 WATER STREET
PL 4296
144-3

"MOTORS" RET

"PARKING R&R
RESTRICTIONS IN
EFFECT WHEN
FLASHING"

EOP

26

EXISTING RAILROAD

"R3-8b" R&R

"SANTO DOMINGO RET
MOTORS..."

1898 COUNTY LAYOUT

6" SWL

"BICYCLE STOP ON RET
LINE FOR GREEN"
BIKE SYMBOL

BROADWAY - ROUTE 28

6" DBYL

"LEFT TURN R&D
YIELD ON GREEN"

MEET EXIST PVMT MARKINGS

16+00

1898 COUNTY LAYOUT

6" SWL

"CANAL ST." R&R
"BROADWAY" R&R

PROP THERMOPLASTIC
PVMT MARKING (TYP)

MEET EXIST PVMT
MARKINGS

CANAL STREET

110+00

1874 CITY LAYOUT

N/F
BROADWAYCANAL-1 LLC
BK/PG 16328/128
3 BROADWAY
144-24

W4-2L

+90

+93

MEET EXIST
PVMT MARKINGS

+98

+01

6" SWL

6" BWL

6" DBYL

R10-11b

MA-R10-12a

R10-11b

12" SL

24+51

15

14

R&R (BO) "KELLEY'S DISCOUNT FURNITURE"

R3-8 (14)

N/F
MASSACHUSETTS
ELECTRIC COMPANY
BK/PG 1011/438
BROADWAY
143-23

N/F
ESSEX COMPANY
BK/PG -/-
ESSEX ST
124-1

N/F
MERRIMACK FALLS LLC
BK/PG 12492/11
BROADWAY
PL 7841, PL 8527
143-22

40' PASSAGEWAY
FOR ABUTTERS
PLAN 8527

N/F
NUNEZ LLC
BK/PG 16673/321
468 CANAL STREET
144-28

LANDSCAPING AND RET
IRRIGATION SIGN

"UP ARROW ROUTE 28 RET
NORTH METHUEN SALEM NH"
"TO 193 LEFT ARROW" RET

R&S "LEFT LANE
FOR LEFT TURN"

RET BLANK SIGN

N/F
6-12 HAMPSHIRE STREET, LLC
BK/PG 13424/72
606 CANAL STREET
144-27-2

N/F
ESSEX COMPANY
BK/PG -/-
WATER ST
144-27-1

0 20 50 100

SCALE: 1" = 20'

LAWRENCE
LMRC RAIL TRAIL

STATE	FED. AID PROJ. NO.	SHEET NO.	TOTAL SHEETS
MA	CMQ-003S(733)X	48	245
	PROJECT FILE NO.	608930	

TRAFFIC SIGN & PAVEMENT MARKING PLANS - 3 OF 11

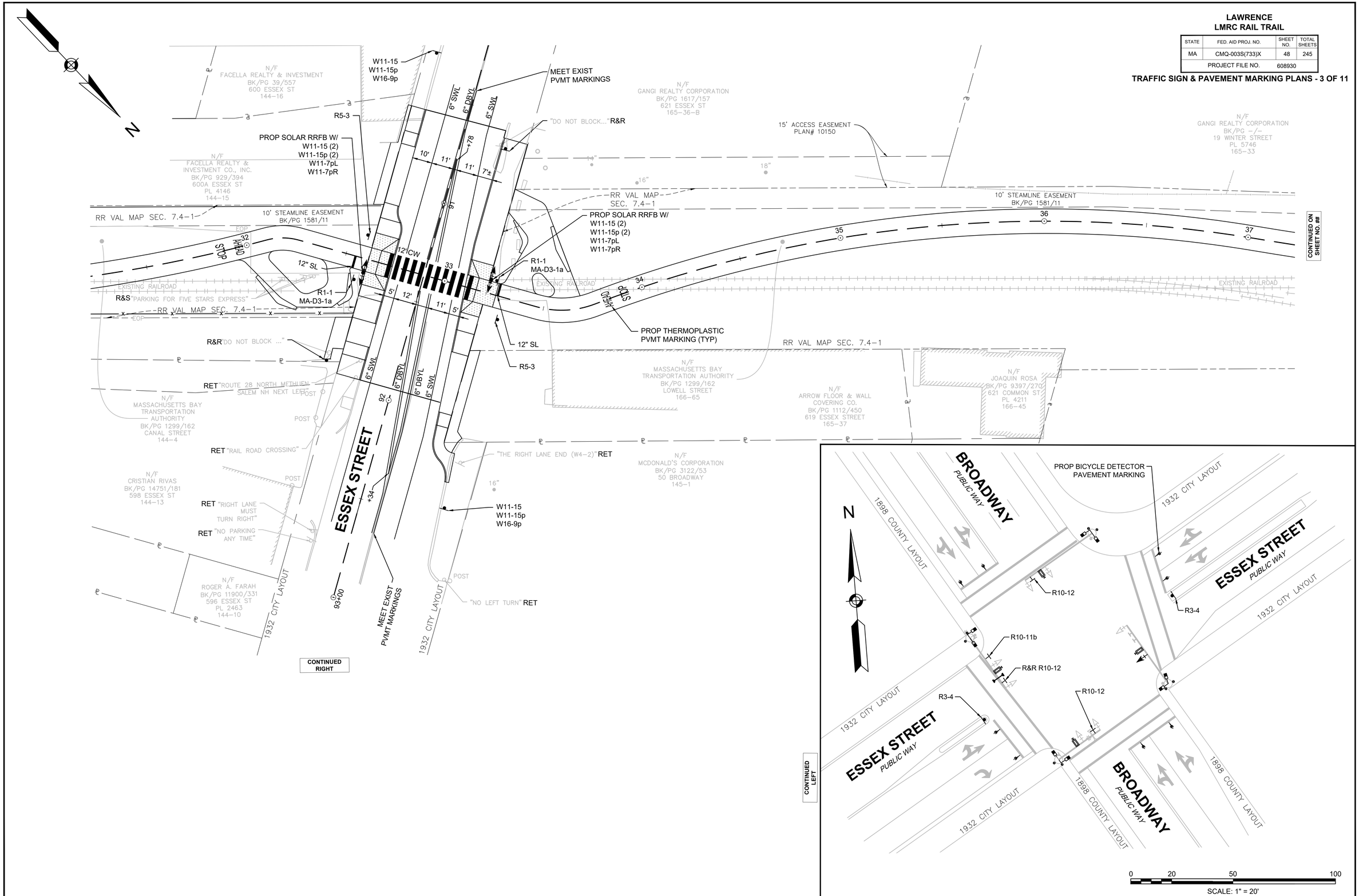

608930_HD7(TSPM).DWG Plotted on 6-Sep-2024 10:25 AM

LAWRENCE
LMRC RAIL TRAIL

STATE	FED. AID PROJ. NO.	SHEET NO.	TOTAL SHEETS
MA	CMQ-003S(733)X	49	245
PROJECT FILE NO.	608930		

TRAFFIC SIGN & PAVEMENT MARKING PLANS - 4 OF 11

608930_HD7(TSPM).DWG Plotted on 6-Sep-2024 10:25 AM

N

WINTER STREET

1877 CITY LAYOUT

1877 CITY LAYOUT

N/F
MERRIMACK STREET LLC
BK/PG 15698/44
33–37 WINTER STREET
166–69

14' COMMON PASSAGEWAY
BK/PG 1577/189

N/F
WILLIAM J. MATTHES, JR.
1881/213
292 LOWELL ST
166–66

1853 CITY LAYOUT

LOWELL STREET
(ABOVE)

509

N/F
ZACHARY MACARO
BK/PG 11843/318
285 LOWELL ST
PL 1011
166–30

1853 CITY LAYOUT

N/F
436 SOUTH UNION
REALTY TRUST
BK/PG 16629/144
291 LOWELL ST
PL 1011
166–29

N/F
GANGI REALTY CORPORATION
BK/PG –/–
19 WINTER STREET
PL 5746
165–33

N/F
THE 620 ESSEX STREET LLC
BK/PG 14245/39
27 WINTER STREET
PL 15028
166–70

14"

12"

11"

510

RR VAL MAP SEC. 7.4–1

10' STEAMLINE EASEMENT
BK/PG 1581/11

CONTINUED ON SHEET NO. ##

37

38

39

40

41

42

CONST ℄

MASSDOT BRIDGE EASEMENT BK/PG 1280/493

RR VAL MAP SEC. 7.4–1

EXISTING RAILROAD

EXISTING RAILROAD

EXISTING RAILROAD

EXISTING RAILROAD

PROP BRIDGE WORK
(SEE SHEET 56)

RR VAL MAP
SEC. 7.4–1

3' MAINTAINENCE
EASEMENT
BK/PG 3036/317

ENCROACHMENT EASEMENT
BK/PG 3036/317

24"

8"

9"

511

N/F
MASSACHUSETTS BAY
TRANSPORTATION AUTHORITY
BK/PG 1299/162
LOWELL STREET
166–65

N/F
DAVID A. BIDER &
SYLVIA M. BIDER
BK/PG 3161/316
278 LOWELL ST
PL 7005
166–64

N/F
283 LOWELL STREET LAWRENCE, LLC
BK/PG 12763/126
283 LOWELL ST
166–31

1853 CITY LAYOUT

LOWELL STREET
(ABOVE)

1853 CITY LAYOUT

N/F
FULTON STREET CORPORATION
BK/PG 3936/289
REAR 92–98 BROADWAY
PL 4226
166–51

N/F
FULTON STREET
CORPORATION
BK/PG 3936/289
266 LOWELL STREET
166–61

14' COMMON PASSAGEWAY

N/F
DAVID A. BIDER &
SYLVIA M. BIDER
BK/PG 3161/316
274–276 LOWELL ST
166–63

N/F
THE 290 LOWELL STREET
REALTY TRUST
BK/PG 4694/65
270–272 LOWELL ST
166–62

CONST ℄

512

N/F
FULTON STREET CORPORATION
BK/PG 3936/289
REAR 617 COMMON STREET
166–58

0 20 50 100

SCALE: 1" = 20'

LAWRENCE
LMRC RAIL TRAIL

STATE	FED. AID PROJ. NO.	SHEET NO.	TOTAL SHEETS
MA	CMQ-003S(733)X	50	245
	PROJECT FILE NO. 608930		

TRAFFIC SIGN & PAVEMENT MARKING PLANS - 5 OF 11

608930_HD7(TSPM).DWG Plotted on 6-Sep-2024 10:26 AM

N

MORTON STREET

CITY LAYOUT

CITY LAYOUT

RET "CITY OF LAWRENCE MOVING FORWARD ..."

1846 COUNTY LAYOUT

HAVERHILL STREET - ROUTE 110

1846 COUNTY LAYOUT

W11-15
W11-15p
W16-9p

N/F
LAWRENCE HOUSING AUTHORITY
BK/PG -/-
33-47 MORTON ST
166-18

100+00

MEET EXIST PVMT MARKINGS

R5-3

N/F
COLONY REALTY TRUST
BK/PG 10851/161
431 HAVERHILL ST
189-55

N/F
COLONY REALTY TRUST
BK/PG 4648/253
13 RAILROAD ST
189-50

N/F
MASSACHUSETTS ELECTRIC COMPANY
BK/PG 1074/21
425 HAVEHILL ST
PL 5594
189-56

RR VAL MAP SEC. 7.4-2

10' STEAMLINE EASEMENT
BK/PG 1581/11

PROP SOLAR RRFB W/
W11-15 (2)
W11-15p (2)
W11-7pL
W11-7pR

10' STEAMLINE EASEMENT
BK/PG 1581/11

5' | 6" SWL | 11' | 6" DBYL | 11' | 7'

12" CW

R1-1
MA-D3-1b

EXISTING RAILROAD

HALT STOP AHEAD

12" SL

6" SWL | 6" DBYL | 6" SWL

12" SL

R5-3

R1-1
MA-D3-1b

PROP SOLAR RRFB W/
W11-15 (2)
W11-15p (2)
W11-7pL
W11-7pR

PROP THERMOPLASTIC PVMT MARKING (TYP)

MEET EXIST PVMT MARKINGS

W11-15
W11-15p
W16-9p

3' MAINTAINENCE EASEMENT TO BENEFIT ABUTTER
BK/PG 3036/317

RET "SLOW SCHOOL ZONE"

ENCROACHMENT EASEMENT TO BENEFIT ABUTTER
BK/PG 3036/317

N/F
5-9 MILL STREET, LLC
BK/PG 15947/238
135 BRADFORD
167-1

N/F
BERNARDO PENA
BK/PG 6731/168
413-415 HAVERHILL ST
167-3

N/F
LAWRENCE FAMILY DEVELOPMENT AND EDUCATION FUND, INC.
BK/PG 4309/86
32 WEST STREET
189-58

N/F
MASSACHUSETTS BAY TRANSPORTATION AUTHORITY
BK/PG 1299/162
MERRIMACK STREET
212-24

RAISED LANDSCAPE ISLAND

HAVERHILL STREET - ROUTE 110

1846 COUNTY LAYOUT

102

102+50

CONTINUED ON SHEET NO. ##

0 20 50 100

SCALE: 1" = 20'

LAWRENCE
LMRC RAIL TRAIL

STATE	FED. AID PROJ. NO.	SHEET NO.	TOTAL SHEETS
MA	CMQ-003S(733)X	51	245
PROJECT FILE NO.	608930		

TRAFFIC SIGN & PAVEMENT MARKING PLANS - 6 OF 11

608930_HD7(TSPM).DWG Plotted on 6-Sep-2024 10:26 AM

CONTINUED ON SHEET NO. ##

N

600+00

601

602+00

RAILROAD STREET
(PUBLIC)

CITY LAYOUT

"SCHOOL ZONE"

W11-2
W16-7pL

12' CW

R&R

16'

9'

12' COMMON DRIVEWAY
PL 14085

AREA SUBJECT TO AUL
BK/PG 5465/325

6" SWL (TYP)

REM EXIST PVMT MARKINGS IN CONFLICT WITH PROP (TYP)

SWL

N/F
DENNIS LEAN
BK/PG 17248/292
40 RAILROAD ST
189–35

N/F
MARCELINA CLETO
BK/PG 15032/300
52 RAILROAD ST
189–36

N/F
COLONY REALTY TRUST
BK/PG 4648/253
13 RAILROAD ST
189–50

N/F
COLONY REALTY TRUST
BK/PG 10260/92
25 RAILROAD ST
189–49

N/F
JAVIER RAFAEL JR
& MARIA JAVIER
BK/PG 15611/222
41 RAILROAD ST
189–48–2

N/F
RAFAEL JAVIER
& MARIA JAVIER
BK/PG 6464/178
45 RAILROAD ST
PL 14085
189–48–1

N/F
JOSE M. BATISTA ESPINAL
BK/PG 16185/187
51 RAILROAD ST
189–47

N/F
JACQUES OUELLET
& LOUISE OUELLET
BK/PG 1341/440
55 RAILROAD ST
189–46

N/F
MASSACHUSETTS ELECTRIC COMPANY
BK/PG 1074/21
425 HAVEHILL ST
PL 5594
189–56

EOP

RR VAL MAP SEC. 7.4–2

10' STEAMLINE EASEMENT
BK/PG 1581/11

12" SL
R1-1

54
55
56
57
58
59

EXISTING RAILROAD

MASSACHUSETTS ELECTRIC EASEMENT
BK/PG 1074/21

N/F
MASSACHUSETTS BAY TRANSPORTATION AUTHORITY
BK/PG 1299/162
MERRIMACK STREET
212–24

N/F
LAWRENCE FAMILY DEVELOPMENT AND EDUCATION FUND, INC.
BK/PG 4309/86
32 WEST STREET
189–58

N/F
MASSACHUSETTS ELECTRIC COMPANY
BK/PG –/–
50 WEST ST
189–59

N/F
130–136 WEST STREET, LLC
BK/PG 10129/3
WEST STREET
190–11

0 20 50 100
SCALE: 1" = 20'

LAWRENCE
LMRC RAIL TRAIL

STATE	FED. AID PROJ. NO.	SHEET NO.	TOTAL SHEETS
MA	CMQ-003S(733)X	52	245
PROJECT FILE NO.	608930		

TRAFFIC SIGN & PAVEMENT MARKING PLANS - 7 OF 11

608930_HD7(TSPM).DWG Plotted on 6-Sep-2024 10:26 AM

N

MAY STREET
(PUBLIC)

1855 CITY LAYOUT

10' STEAMLINE EASEMENT BK/PG 1581/11

RR VAL MAP SEC. 7.4-2

EXISTING RAILROAD

70 71 72 73 74 75

CONC. PIERS

MANCHESTER STREET
(PUBLIC - 50.0' WIDE)

1894 CITY LAYOUT

10-00

"KEEP RIGHT" RET (RIGHT ARROW)

"CITY OF LAWRENCE ..." RET

"KEEP RIGHT" RET (RIGHT ARROW)

"KEEP RIGHT" RET (RIGHT ARROW)

YIELD RET

"MANCHESTER ST" RET

CITY OF LAWRENCE BRIDGE EASEMENT (SEE VAL MAP)

RR VAL MAP SEC. 7.4-2

10' STEAMLINE EASEMENT BK/PG 1581/11

RET "CITY OF LAWRENCE MOVING FORWARD..."

10' STEAMLINE EASEMENT BK/PG 1581/11

"STATE LAW" RET DRIVERS YIELD TO ROTARY TRAFFIC"

"STOP" RET

N/F CITY OF LAWRENCE BK/PG 15166/315 85 MANCHESTER ST 212-3-1

MANCHESTER STREET
(PUBLIC - 50.0' WIDE)

11 12

12+50

1894 CITY LAYOUT

1894 CITY LAYOUT

BLAKELIN STREET
(PUBLIC)

CITY LAYOUT

CITY LAYOUT

CONTINUED ON SHEET NO. ##

0 20 50 100

SCALE: 1" = 20'

LAWRENCE
LMRC RAIL TRAIL

STATE	FED. AID PROJ. NO.	SHEET NO.	TOTAL SHEETS
MA	CMQ-003S(733)X	53	245
	PROJECT FILE NO.	608930	

TRAFFIC SIGN & PAVEMENT MARKING PLANS - 8 OF 11

608930_HD7(TSPM).DWG Plotted on 6-Sep-2024 10:27 AM

N

BARKER STREET

1867 CITY LAYOUT

1848 CITY LAYOUT

N/F
CITY OF LAWRENCE VETERANS LOT
BK/PG -/-
BARKER ST
212-1

CURRANT HILL ROAD

CONTINUED ON SHEET NO. ##

75 76 77 78 79 80 301 302

300+00

RR VAL MAP SEC. 7.4-2

R1-1
TRAIL SIGN
(SEE LANDSCAPE PLANS)
(PAID FOR UNDER ITEM 874.71)

10' STEAMLINE EASEMENT
BK/PG 1581/11

N/F
CITY OF LAWRENCE
BK/PG -/-
87 MANCHESTER ST
212-3-3

N/F
CITY OF LAWRENCE
BK/PG 15166/315
85 MANCHESTER ST
212-3-1

N/F
MASSACHUSETTS BAY
TRANSPORTATION AUTHORITY
BK/PG 1299/162
MERRIMACK STREET
212-2

AREA SUBJECT TO AUL
BK/PG 9906/139

30' PRIVATE WAY

12" SL

PROP THERMOPLASTIC
PVMT MARKING (TYP)

EOP

CONC

N/F
THE CITY OF LAWRENCE
C/O LAWRENCE DPW
BK/PG 11232/152
85A MANCHESTER ST
PL 15922
212-3-2

R1-1

12" SL

401+60

LIMIT OF WORK
STA 401+60
N3085336.1304
E741907.3135

0 20 50 100
SCALE: 1" = 20'

LAWRENCE
LMRC RAIL TRAIL

STATE	FED. AID PROJ. NO.	SHEET NO.	TOTAL SHEETS
MA	CMQ-003S(733)X	54	245
PROJECT FILE NO.	608930		

TRAFFIC SIGN & PAVEMENT MARKING PLANS - 9 OF 11

608930_HD7(TSPM).DWG Plotted on 6-Sep-2024 10:27 AM

N

CURRANT HILL ROAD
(PUBLIC)

1848 CITY LAYOUT

1848 CITY LAYOUT
RR VAL MAP SEC. 7.4–2

RR VAL MAP SEC. 7.4–2

81 82 83 84 85 86 302 303 304 305 306 307 308

400+00

401

401+60

TRAIL SIGN
(SEE LANDSCAPE PLANS)
(PAID FOR UNDER ITEM 874.71)

R1-1

12" SL

PROP THERMOPLASTIC
PVMT MARKING (TYP)

12" SPICKET RIVER GREENWAY

LIMIT OF RESOURCE AREA
AS FLAGGED BY NOVER ARMSTRONG
ON MARCH 10, 2017. (TYP.)

25–FT RIVERFRONT AREA

CONC

0 20 50 100
SCALE: 1" = 20'

LAWRENCE
LMRC RAIL TRAIL

STATE	FED. AID PROJ. NO.	SHEET NO.	TOTAL SHEETS
MA	CMQ-003S(733)X	55	245
PROJECT FILE NO.	608930		

TRAFFIC SIGN & PAVEMENT MARKING PLANS - 10 OF 11

608930_HD7(TSPM).DWG Plotted on 6-Sep-2024 10:27 AM

N

1848 CITY LAYOUT

CURRANT HILL ROAD
(PUBLIC)

26" 1848 CITY LAYOUT
RR VAL MAP SEC. 7.4-2

12" 14" 32" 14" 11" 9" 26" 28" 18" 22" 13" 14" 10" 13" 12" 18" 21" 16" 16" 20" 22" 28" 12" 12" 12"

86 87 88 89+00

PROJECT END
STA 88+45
N3085865.0513
E741310.0879

25-FT RIVERFRONT AREA

RR VAL MAP SEC. 7.4-2

305 309 310+00

LIMIT OF WORK
STA 309+42
N3085910.0398
E741529.3536

~CITY OF LAWRENCE~
~CITY OF METHUEN~

LIMIT OF RESOURCE AREA AS FLAGGED BY NOVEER ARMSTRONG ON MARCH 10, 2017. (TYP.)

Sp

0 20 50 100
SCALE: 1" = 20'

LAWRENCE
LOWELL STREET

STATE	FED. AID PROJ. NO.	SHEET NO.	TOTAL SHEETS
MA	CMQ-003S(733)X	56	245
PROJECT FILE NO.	608930		

TRAFFIC SIGN & PAVEMENT MARKING PLANS - 11 OF 11

608930_HD7(TSPM).DWG Plotted on 6-Sep-2024 7:42 PM

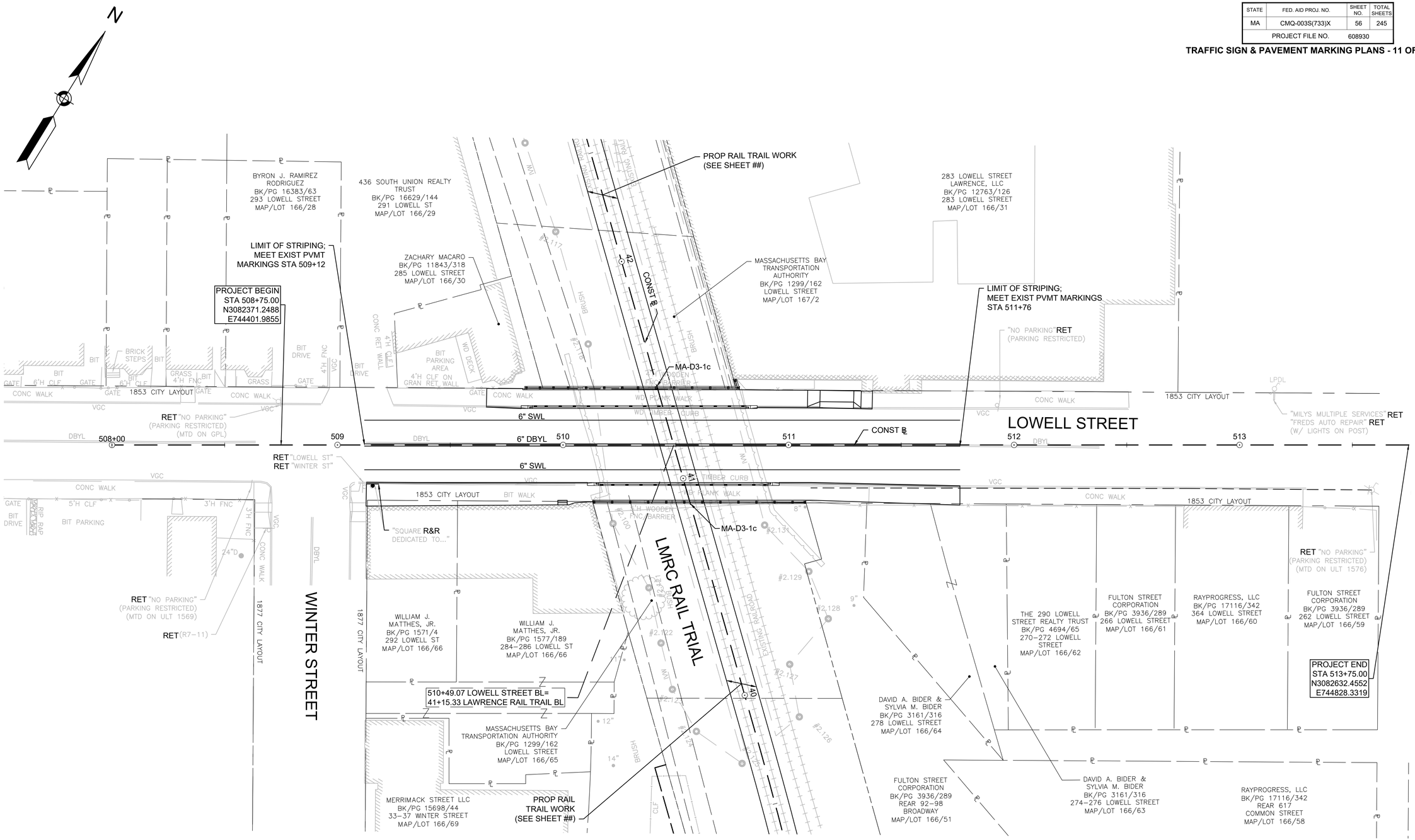

TRAFFIC SIGN SUMMARY

IDENTIFICATION NUMBER	SIZE OF SIGN (in)		LEGEND	TEXT DIMENSIONS (in)			NUMBER OF SIGNS REQUIRED	COLOR			SIZE AND NUMBER OF POSTS REQUIRED	UNIT AREA (SF)	TOTAL AREA (SF)
	WIDTH	HEIGHT		LETTER HEIGHT	VERTICAL SPACING	ARROW RTE. MKR		BACK-GROUND	LEGEND	BORDER			
R1-1	18	18	STOP	SEE 2009 MANUAL ON UNIFORM TRAFFIC CONTROL DEVICES			7	RED	WHITE	WHITE	7	2.25	15.75
R3-4	36	36					2	WHITE	RED/ BLACK	BLACK	2	9.00	18.00
R3-8 (14)	30	30	ONLY				1	WHITE	BLACK	BLACK	1	6.25	6.25
R3-8 (25)	30	30	ONLY				1	WHITE	BLACK	BLACK	1	6.25	6.25
R5-3	24	24	NO MOTOR VEHICLES				4	WHITE	BLACK	BLACK	2	4.00	16.00
R9-6	12	18	YIELD TO PEDS				2	WHITE	BLACK	BLACK	2	1.50	3.00
R9-7a	12	18	KEEP LEFT/RIGHT				1	WHITE	BLACK	BLACK	1	1.50	1.50
R9-7b	12	18	KEEP LEFT/RIGHT				1	WHITE	BLACK	BLACK	1	1.50	1.50
R10-3e	9	15					6	WHITE	BLACK/ ORANGE	BLACK	MOUNT ON TS PED PBN	PAID UNDER ITEM 816.01	
							8	WHITE	BLACK/ ORANGE	BLACK	MOUNT ON TS PED PBN	PAID UNDER ITEM 816.02	
R10-11b	36	36	NO TURN ON RED				4	WHITE	BLACK	BLACK	MOUNT ON MAST ARM	9.00	36.00
R10-12	30	36	LEFT TURN YIELD ON GREEN				2	WHITE	BLACK/ GREEN	BLACK	MOUNT ON MAST ARM	7.50	15.00
R10-25	9	12	PUSH BUTTON TO TURN ON WARNING LIGHTS				2	WHITE	BLACK	BLACK	MOUNT ON RRFB	PAID UNDER ITEM 825.21	
							2	WHITE	BLACK	BLACK	MOUNT ON RRFB	PAID UNDER ITEM 825.22	
							2	WHITE	BLACK	BLACK	MOUNT ON RRFB	PAID UNDER ITEM 825.23	
MA-D3-1a	48	12	SEE DETAIL	6D/4D	3 3	N/A	2	GREEN	WHITE	WHITE	2	PAID UNDER ITEM 874.	
MA-D3-1b	63	12	SEE DETAIL	6D/4D	3 3	N/A	2	GREEN	WHITE	WHITE	2	PAID UNDER ITEM 874.	
MA-D3-1c	21	6	SEE DETAIL	3D/2D	1.5 1.5	N/A	2	GREEN	WHITE	WHITE	MOUNT ON ARCH	PAID UNDER ITEM 874.	
MA-R10-12a	30	36	LEFT TURN YIELD ON FLASHING	MASSDOT STANDARD SIGN			2	WHITE	BLACK/ YELLOW	BLACK	MOUNT ON MAST ARM	7.50	15.00
W4-2L	36	36		SEE 2009 MANUAL ON UNIFORM TRAFFIC CONTROL DEVICES			1	YELLOW	BLACK	BLACK	1	9.00	9.00

Essex St
MA-D3-1a

Haverhill St
MA-D3-1b

Lowell St
MA-D3-1c

NOTES:

1. THE MINIMUM MOUNTING HEIGHT OF POST-MOUNTED SIGNS, MEASURED VERTICALLY FROM THE BOTTOM OF THE SIGN TO THE TOP OF CURB OR SIDEWALK, OR THE ELEVATION OF THE NEAR EDGE OF TRAVEL WAY, SHALL BE 7 FEET UNLESS OTHERWISE SPECIFIED.
2. A MINIMUM 3'-0" PATH OF TRAVEL CLEARANCE, EXCLUDING CURB, IS REQUIRED WHEN PLACING SIGNS. SIGNS SHALL BE INSTALLED SUCH THAT THE NEAREST EDGE SHALL BE OFFSET A MINIMUM OF 18" FROM THE EDGE OF ROADWAY.

LAWRENCE
LMRC RAIL TRAIL

STATE	FED. AID PROJ. NO.	SHEET NO.	TOTAL SHEETS
MA	CMQ-003S(733)X	57	245
PROJECT FILE NO.	608930		

TRAFFIC SIGN SUMMARY

TRAFFIC SIGN SUMMARY

IDENTIFICATION NUMBER	SIZE OF SIGN (in)		LEGEND	TEXT DIMENSIONS (in)			NUMBER OF SIGNS REQUIRED	COLOR			SIZE AND NUMBER OF POSTS REQUIRED	UNIT AREA (SF)	TOTAL AREA (SF)
	WIDTH	HEIGHT		LETTER HEIGHT	VERTICAL SPACING	ARROW RTE. MKR		BACK-GROUND	LEGEND	BORDER			
W11-2	30	30		SEE 2009 MANUAL ON UNIFORM TRAFFIC CONTROL DEVICES			2	FL. YELLOW-GREEN	BLACK	BLACK	2	6.25	12.50
W11-15	30	30					4	FL. YELLOW-GREEN	BLACK	BLACK	4	6.25	25.00
							4	FL. YELLOW-GREEN	BLACK	BLACK	MOUNT ON RRFB	PAID UNDER ITEM 825.21	
							4	FL. YELLOW-GREEN	BLACK	BLACK	MOUNT ON RRFB	PAID UNDER ITEM 825.22	
							4	FL. YELLOW-GREEN	BLACK	BLACK	MOUNT ON RRFB	PAID UNDER ITEM 825.23	
W11-15p	24	18	TRAIL X-ING				4	FL. YELLOW-GREEN	BLACK	BLACK	MOUNT W/ W11-15	3.00	12.00
							4	FL. YELLOW-GREEN	BLACK	BLACK	MOUNT ON RRFB	PAID UNDER ITEM 825.21	
							4	FL. YELLOW-GREEN	BLACK	BLACK	MOUNT ON RRFB	PAID UNDER ITEM 825.22	
							4	FL. YELLOW-GREEN	BLACK	BLACK	MOUNT ON RRFB	PAID UNDER ITEM 825.23	
W16-7pL	24	12					2	FL. YELLOW-GREEN	BLACK	BLACK	MOUNT W/ W11-2	2.00	4.00
							2	FL. YELLOW-GREEN	BLACK	BLACK	MOUNT ON RRFB	PAID UNDER ITEM 825.21	
							2	FL. YELLOW-GREEN	BLACK	BLACK	MOUNT ON RRFB	PAID UNDER ITEM 825.22	
							2	FL. YELLOW-GREEN	BLACK	BLACK	MOUNT ON RRFB	PAID UNDER ITEM 825.23	
W16-7pR	24	12					2	FL. YELLOW-GREEN	BLACK	BLACK	MOUNT ON RRFB	PAID UNDER ITEM 825.21	
							2	FL. YELLOW-GREEN	BLACK	BLACK	MOUNT ON RRFB	PAID UNDER ITEM 825.22	
							2	FL. YELLOW-GREEN	BLACK	BLACK	MOUNT ON RRFB	PAID UNDER ITEM 825.23	
W16-9p	24	12	AHEAD				4	FL. YELLOW-GREEN	BLACK	BLACK	MOUNT W/ W11-15	2.00	8.00

608930_HD7(TSPM).DWG Plotted on 6-Sep-2024 7:15 PM

LAWRENCE
LMRC RAIL TRAIL

STATE	FED. AID PROJ. NO.	SHEET NO.	TOTAL SHEETS
MA	CMQ-003S(733)X	58	245
PROJECT FILE NO.	608930		

TRAFFIC SIGNAL PLANS - 1 OF 4
BROADWAY &
WATER STREET / CANAL STREET

608930_HD7A(TRAFFIC SIGNAL PLANS).DWG Plotted on 6-Sep-2024 9:59 AM

N

NAD 83

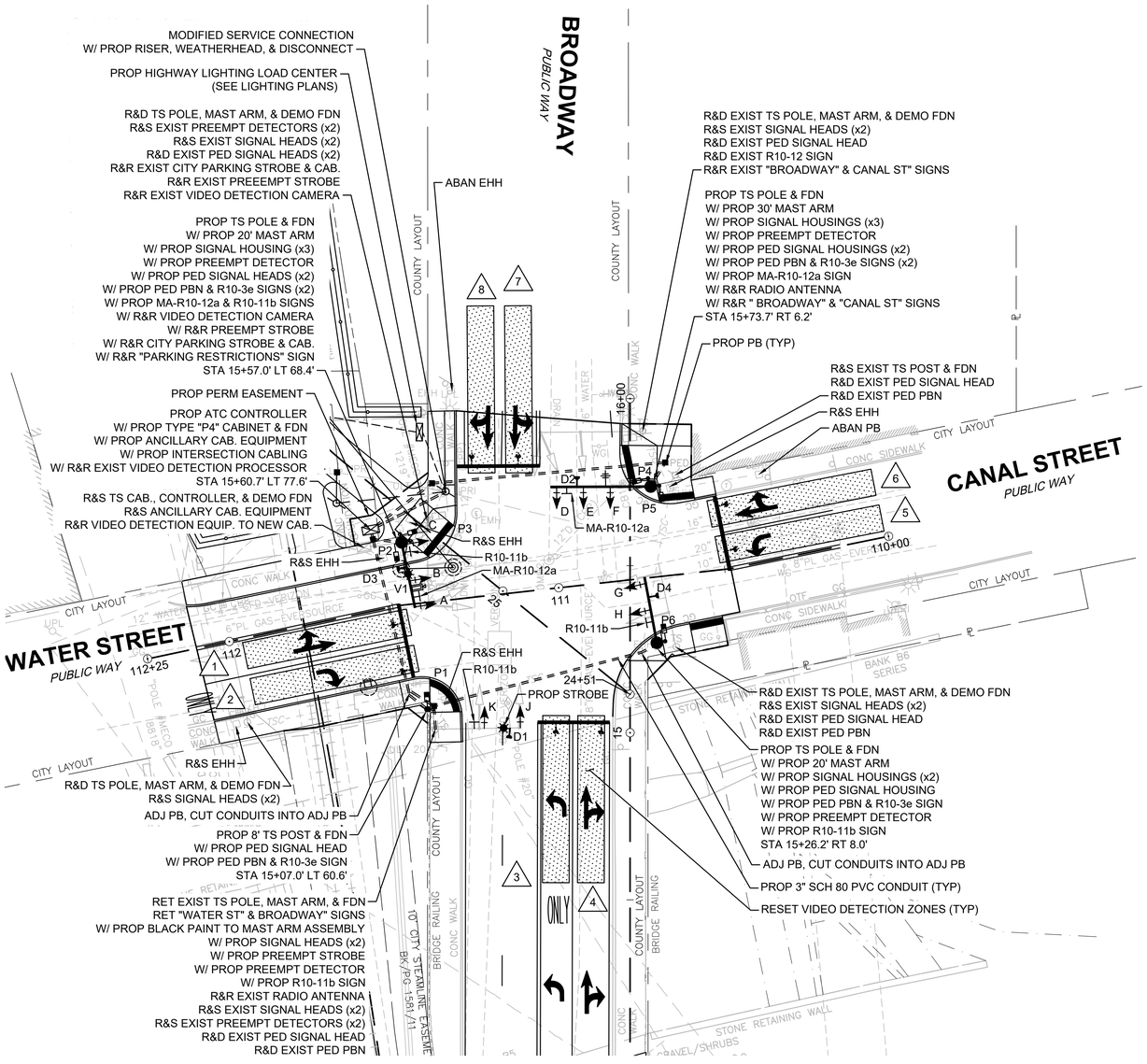

NOTES:

1. PEDESTRIAN PUSH BUTTONS SHALL BE PERPENDICULAR TO THE CROSSWALK PATH OF TRAVEL, WITH THE ARROW PROVIDED ON THE PUSH BUTTON PARALLEL TO THE CROSSWALK PATH OF TRAVEL.
2. WHERE TWO APS PEDESTRIAN PUSH BUTTONS ARE NOT SEPARATED BY MORE THAN 10 FEET, THE AUDIBLE WALK INDICATION SHALL BE A SPEECH WALK MESSAGE.
3. VIDEO DETECTION ZONES SHALL BE ADJUSTED IN THE FIELD BY CONTRACTOR IN PRESENCE OF ENGINEER.
4. CROSSWALKS NOT SHOWN FOR VISUAL CLARITY OF TRAFFIC SIGNAL EQUIPMENT.
5. CONTRACTOR SHALL REMOVE ALL EXISTING AND FUTURE UNUSED TRAFFIC SIGNAL PULL BOXES AND CONDUIT WITHIN AREAS OF NEWLY CONSTRUCTED SIDEWALKS.
6. CONTRACTOR SHALL ABANDON ALL EXISTING CONDUIT UNLESS REMOVAL IS NECESSARY DUE TO OTHER CONSTRUCTION CONFLICTS. ALL EXISTING UNUSED CONDUIT ENDS SHALL BE PLUGGED.
7. CONTRACTOR SHALL MAINTAIN EXISTING TRAFFIC SIGNAL OPERATIONS UNTIL NEW TRAFFIC SIGNAL IS FULLY-OPERATIONAL.
8. MAST ARM POLES AND FOUNDATIONS WILL NEED TO BE INSTALLED WITH LOW-PROFILE EXCAVATION AND/OR INSTALLATION EQUIPMENT DUE TO THE CLOSE PROXIMITY WITH EXISTING OVERHEAD PRIMARY POWER LINES THAT CANNOT BE DE-ENERGIZED.
9. CONTRACTOR SHALL COORDINATE WITH UTILITY COMPANY FOR THE SHIELDING AND INSULATION OF TRAFFIC SIGNAL EQUIPMENT AND OVERHEAD WIRES (AS NECESSARY).

0 20 50 100

SCALE: 1" = 20'

LAWRENCE
LMRC RAIL TRAIL

STATE	FED. AID PROJ. NO.	SHEET NO.	TOTAL SHEETS
MA	CMQ-003S(733)X	59	245
PROJECT FILE NO.	608930		

TRAFFIC SIGNAL PLANS - 2 OF 4
BROADWAY &
WATER STREET / CANAL STREET

SEQUENCE AND TIMING CHART FOR FULLY-ACTUATED TRAFFIC SIGNAL CONTROL

BROADWAY AT CANAL STREET AND WATER STREET (LAWRENCE, MASSACHUSETTS)

N

			Ø1	Ø2	Ø3	Ø4	Ø5	Ø6	Ø7	Ø8	Ø9 (PED)
			OLA	PERM		PERM	NOT USED	FYA	NOT USED	FYA	
APPROACH	DIRECTION	HOUSING	1 2 3	4 5 6	7 8 9	10 11 12	13 14 15	16 17 18	19 20 21	22 23 24	25 26 27
WATER STREET	EB-LT	G	R R R	R R R	R R R	G Y R		R R R		R R R	R R R
WATER STREET	EB-R	H	R G Y	R R R	R R R	G Y R		R R R		R R R	R R R
CANAL STREET	WB-L	A	←R- ←R- ←R-	←R- ←R- ←R-	←G- ←Y- ←R-	←R- ←R- ←R-		←R- ←R- ←R-		←FY- ←Y- ←R-	←R- ←R- ←R-
CANAL STREET	WB-TR	B,C	R R R	R R R	R R R	R R R		R R R		G Y R	R R R
BROADWAY	NB-L	D	←G- ←Y- ←R-	←R- ←R- ←R-	←R- ←R- ←R-	←R- ←R- ←R-		←FY- ←Y- ←R-		←R- ←R- ←R-	←R- ←R- ←R-
BROADWAY	NB-TR	E,F	R R R	R R R	R R R	R R R		G Y R		R R R	R R R
BROADWAY	SB-LTR	J,K	R R R	G Y R	R R R	R R R		R R R		R R R	R R R
PEDESTRIAN	ALL	P1-P8	DW DW DW	DW DW DW	DW DW DW	DW DW DW		DW DW DW		DW DW DW	W FDW DW
MINIMUM INTERVAL			6	10	6	6		10		6	
VEHICLE EXTENSION			2	3	2	2		3		2	
MAXIMUM 1			15	35	10	20		50		35	
MAXIMUM 2			25	40	10	35		65		50	
YELLOW CLEARANCE			3.5	4.0	3.5	3.5		4.0		3.5	
RED CLEARANCE			0.0	1.0	0.0	2.5		1.0		2.5	
WALK											7.0
PEDESTRIAN CLEARANCE											13.0 4.0
RECALL			OFF	MIN	OFF	OFF		MIN		OFF	OFF
DETECTOR			NON-LOCK	NON-LOCK	NON-LOCK	NON-LOCK		NON-LOCK		NON-LOCK	LOCK

FLASHING OPERATION: FR | FR | FR | FR | FR | FR | FY | FY | OUT

EMERGENCY ONLY

PRE-EMPTION PHASING AND PRIORITY

	PREEMPT ØA - D1			PREEMPT ØB - D2			PREEMPT ØC - D3			PREEMPT ØD - D4		
	28	29	30	31	32	33	34	35	36	37	38	39
	R	R	R	R	R	R	G	Y	R	R	R	R
	R	R	R	R	R	R	G	Y	R	R	R	R
	←R-	←R-	←R-	←R-	←R-	←R-	←R-	←R-	←R-	←G-	←Y-	←R-
	R	R	R	R	R	R	R	R	R	G	Y	R
	←R-	←R-	←R-	←R-	←R-	←R-	←R-	←R-	←R-	←R-	←R-	←R-
	G	Y	R	R	R	R	R	R	R	R	R	R
	R	R	R	G	Y	R	R	R	R	R	R	R
	DW	DW	DW	DW	DW	DW	DW	DW	DW	DW	DW	DW
	*			*			*			*		

PREEMPTION PHASING AND PRIORITY

	PREEMPT ØA - D1	PREEMPT ØB - D2	PREEMPT ØC - D3	PREEMPT ØD - D4
	Ø1 & Ø6	Ø2	Ø4	Ø3 & Ø8
	NEXT Ø2&Ø6	NEXT Ø2&Ø6	NEXT Ø2&Ø6	NEXT Ø2&Ø6

SEQUENCE & TIMING NOTES:
1. AUTOMATIC FLASHING OPERATION PER M.U.T.C.D. SECTION 4D.12.
2. PEDESTRIAN PHASE UPON PUSH BUTTON ACTIVATION ONLY.
3. PERM = PERMITTED LEFT-TURN | FYA = FLASHING YELLOW ARROW
4. OL = OVERLAP
5. MAXIMUM 1 - FREE OPERATION
   MAXIMUM 2 - M-F (3:00 PM - 7:00 PM)
6. IF THE ASSIGNED RIGHT OF WAY FOR ANY TRAFFIC MOVEMENT IS TO REMAIN IN EFFECT DURING THE NEXT CALLED PHASE, THE SIGNAL INDICATIONS FOR THAT TRAFFIC MOVEMENT WILL NOT CHANGE DURING THE CLEARANCE INTERVAL.
7. THE RIGHT OF WAY MAY BE ASSIGNED TO ANY PHASE OR ANY COMBINATION OF NON-CONFLICTING PHASES.
8. IF CALLS EXIST ON ALL PHASES, THE ASSIGNMENT OF RIGHT OF WAY SHALL BE IN ACCORDANCE WITH THE PREFERENTIAL PHASE SEQUENCE.
9. IF THE ASSIGNED RIGHT-OF-WAY FOR ANY TRAFFIC MOVEMENT IS TO CHANGE DURING THE NEXT CALLED PHASE, THE SIGNAL INDICATION FOR THAT MOVEMENT WILL DISPLAY THE APPROPRIATE CLEARANCE INTERVALS.
10. IF Ø8 IS CALLED IMMEDIATELY FOLLOWING Ø3, THE SEQUENCE FOR SIGNAL HOUSING "A" SHALL BE SOLID GREEN ARROW, SOLID YELLOW ARROW, FLASHING YELLOW ARROW, SOLID YELLOW ARROW, AND SOLID RED ARROW.
11. IF Ø6 IS CALLED IMMEDIATELY FOLLOWING Ø1, THE SEQUENCE FOR SIGNAL HOUSING "D" SHALL BE SOLID GREEN ARROW, SOLID YELLOW ARROW, FLASHING YELLOW ARROW, SOLID YELLOW ARROW, AND SOLID RED ARROW.

EMERGENCY VEHICLE PRE-EMPTION NOTES:
1. EMERGENCY VEHICLE PRE-EMPTION SIGNALS SHALL BE OPTICALLY TRANSMITTED BY OPTICAL EMITTERS MOUNTED IN EMERGENCY VEHICLES AND RECEIVED BY OPTICAL DETECTORS LOCATED AT EACH INTERSECTION.
2. EMERGENCY VEHICLE PRE-EMPTION SIGNALS SHALL BE SERVICED ON A FIRST DETECTED FIRST SERVED BASIS.
3. EMERGENCY PRE-EMPTION SHALL OVERRIDE COORDINATION.
4. IN RESPONSE TO A PRE-EMPTION SIGNAL RECEIVED AT AN INTERSECTION BY OPTICAL DETECTOR D1 (OR D2, D3, D4) THE CONTROLLER SHALL HOLD OR ADVANCE TO AND HOLD IN EMERGENCY VEHICLE PRE-EMPTION PHASE ØA (OR ØB, ØC, ØD) GREEN FOR A MINIMUM OF TEN (10) SECONDS OR A MAXIMUM OF SIXTY (60) SECONDS OR UNTIL PRE-EMPTION SIGNAL CEASES. THE CONTROLLER SHALL THEN TIME PRE-EMPTION PHASE CLEARANCE (AS NOTED IN CHART) AND SERVICE SUBSEQUENT EMERGENCY VEHICLE PRE-EMPTION PHASES AS NECESSARY.
5. NORMAL CLEARANCE SHALL BE PROVIDED ON PHASES THAT ARE TO BE TERMINATED BY PRE-EMPTION DEMAND.
6. CONFIRMATION STROBES (WHITE) SHALL BE ILLUMINATED WHENEVER ANY EMERGENCY VEHICLE PRE-EMPTION GREEN IS ON.

CONSTRUCTION NOTES:
1. THE CONTRACTOR SHALL MAINTAIN EXISTING TRAFFIC SIGNAL OPERATIONS THROUGHOUT CONSTRUCTION UNTIL THE NEW TRAFFIC SIGNAL EQUIPMENT IS FULLY-OPERATIONAL.
2. THE CONSTRUCTION SHALL CONFORM WITH MASSACHUSETTS DEPARTMENT OF TRANSPORTATION, HIGHWAY DIVISION SPECIFICATIONS UNLESS OTHERWISE NOTED.
3. PEDESTRIAN PUSH BUTTONS SHALL BE PERPENDICULAR TO THE CROSSWALK PATH OF TRAVEL, WITH THE ARROW PROVIDED ON THE PUSH BUTTON PARALLEL TO THE CROSSWALK PATH OF TRAVEL.
4. PULL BOXES SHALL NOT BE LOCATED WITHIN THE ACCESSIBLE RAMPS UNLESS OTHERWISE INDICATED.
5. EXISTING CONDUIT LAYOUT IS APPROXIMATE AND SHALL BE CONFIRMED BY THE CONTRACTOR.
6. ALL PROPOSED CONCRETE PULL BOX FOUNDATIONS SHALL BE CONSTRUCTED IN ACCORDANCE WITH MASSACHUSETTS DEPARTMENT OF TRANSPORTATION SIGNAL & LIGHTING STANDARDS.

BROADWAY @ CANAL STREET / WATER STREET
LIST OF MAJOR ITEMS REQUIRED

ITEM #	QUANTITY	DESCRIPTION
804.3	± 270 FT	3" SCH. 80 PVC CONDUIT
811.31	4	PULL BOX 12 X12 INCHES - SD2.031
811.35	2	PULL BOX ADJUSTED
811.39	5	ELECTRIC HANDHOLE REMOVED AND STACKED
816.01	1	ATC CONTROLLER IN A TYPE P4 BASE MOUNTED CAB, ANCILLARY CAB EQUIPMENT, W/ FDN (PAINTED BLACK)
	1	SERVICE CONNECTION W/ RISER, WEATHERHEAD, & DISCONNECT (OVERHEAD)
	2	TS POLE W/ 20' MAST ARM, STEEL MONOLEVER, W/ FDN (PAINTED BLACK)
	1	TS POLE W/ 30' MAST ARM, STEEL MONOLEVER, W/ FDN (PAINTED BLACK)
	1	8' TS POST, BASE, & FDN (PAINTED BLACK)
	7	SIGNAL HEAD, 3-SECTION, 12" L.E.D. MODULES, 5" RETROREFLECTIVE BACKPLATES, & TUNNEL VISORS (PAINTED BLACK)
	2	SIGNAL HEAD, 4-SECTION, 12" L.E.D. MODULES, 5" RETROREFLECTIVE BACKPLATES, & TUNNEL VISORS (PAINTED BLACK)
	1	SIGNAL HEAD, 5-SECTION, 12" L.E.D. MODULES, 5" RETROREFLECTIVE BACKPLATES, & TUNNEL VISORS (PAINTED BLACK)
	6	PEDESTRIAN SIGNAL HEAD, 16" L.E.D. MODULE, COUNTDOWN INDICATOR (PAINTED BLACK)
	6	PEDESTRIAN PUSH BUTTON (VIBRATORY) W/ AUDIBLE WARNING DEVICES (APS) & R10-3e SIGN SADDLE (PAINTED BLACK)
	3	EMERGENCY PREEMPT 2-CH PHASE SELECTORS (2 + 1 SPARE)
	1	EMERGENCY PREEMPT CONFIRMATION STROBE
	4	EMERGENCY PREEMPT DETECTORS
	1	RET TS POLE & MAST ARM (PAINTED BLACK)
	1	CONTROLLER PROGRAMMING & FINE TUNING
	1	INTERSECTION RECABLING
	1	R&R EXIST PREEMPT STROBE
	1	R&R EXIST VIDEO DETECTION CAMERA
	1	R&R EXIST VIDEO DETECTION PROCESSOR TO NEW CAB.
	1	R&R EXIST EXIST RADIO ANTENNA
	1	R&R EXIST CITY PARKING STROBE & CAB.
	4	R&R TS MOUNTED STREET SIGNS
816.80	4	R&D EXIST TS POLE, MAST ARM, & DEMO FDN
	10	R&S EXIST SIGNAL HEADS
	1	R&S EXIST TS CABINET & CONTROLLER W/ ANCILLARY CAB. EQUIPMENT
	6	R&D EXIST PEDESTRIAN SIGNAL HEAD
	3	R&D EXIST PEDESTRIAN PUSH BUTTON
	1	R&D EXIST TS POST & FDN
	4	R&S EXIST PREEMPT DETECTORS
	1	R&D EXIST R10-12
832.	42 SF	SIGNS (R10-11b, MA-R10-12a) AS NOTED ON TS EQUIPMENT

PLUS NECESSARY CONDUIT, CABLE, LABOR, MISCELLANEOUS MATERIAL AND EQUIPMENT TO COMPLETE THE INSTALLATION AND PROVIDE AN OPERATING TRAFFIC CONTROL SIGNAL.

VIDEO DETECTOR DATA

AMPLIFIER NO.	DETECTOR NO.	NO.-SECTION SIZE	PHASE CALLED	PHASE EXT.	DELAY/ EXT.	OPERATIONS
V1	1	±8'x50'	Ø4	Ø4	0	PRESENCE
V1	2	±8'x50'	Ø4	Ø4	0	PRESENCE
V1	3	±8'x50'	Ø1	Ø1 / Ø6	0	PRESENCE
V1	4	±8'x50'	Ø6	Ø6	0	PRESENCE
V1	5	±8'x50'	Ø3	Ø3 / Ø8	0	PRESENCE
V1	6	±8'x50'	Ø8	Ø8	0	PRESENCE
V1	7	±8'x50'	Ø2	Ø2	0	PRESENCE
V1	8	±8'x50'	Ø2	Ø2	0	PRESENCE

VIDEO DETECTOR NOTES:
1. DELAY AND EXTENSION TIMINGS SHALL BE PROGRAMMED IN THE CONTROLLER ONLY.

SIGNAL HOUSING DATA

A,D	B,C,E,F,G,J,K	H	P1-P8
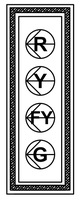	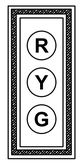	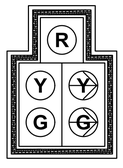	
ALL W/ 12" LED MODULES, 5" BACKPLATES, 3" RETRO-REFLECTIVE STRIP, & TUNNEL VISORS			ALL 16" LED W/ COUNTDOWN INDICATION & VISORS

PREFERENTIAL PHASE SEQUENCE

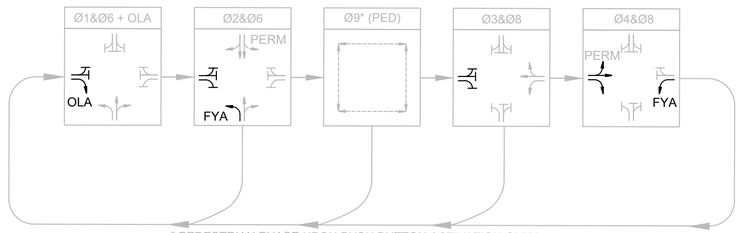

* PEDESTRIAN PHASE UPON PUSH BUTTON ACTIVATION ONLY.

608930_HD7A(TRAFFIC SIGNAL PLANS).DWG Plotted on 6-Sep-2024 10:00 AM

LAWRENCE
LMRC RAIL TRAIL

STATE	FED. AID PROJ. NO.	SHEET NO.	TOTAL SHEETS
MA	CMQ-003S(733)X	60	245
	PROJECT FILE NO. 608930		

TRAFFIC SIGNAL PLANS - 3 OF 4
BROADWAY & ESSEX STREET

608930_HD7A(TRAFFIC SIGNAL PLANS).DWG Plotted on 6-Sep-2024 10:00 AM

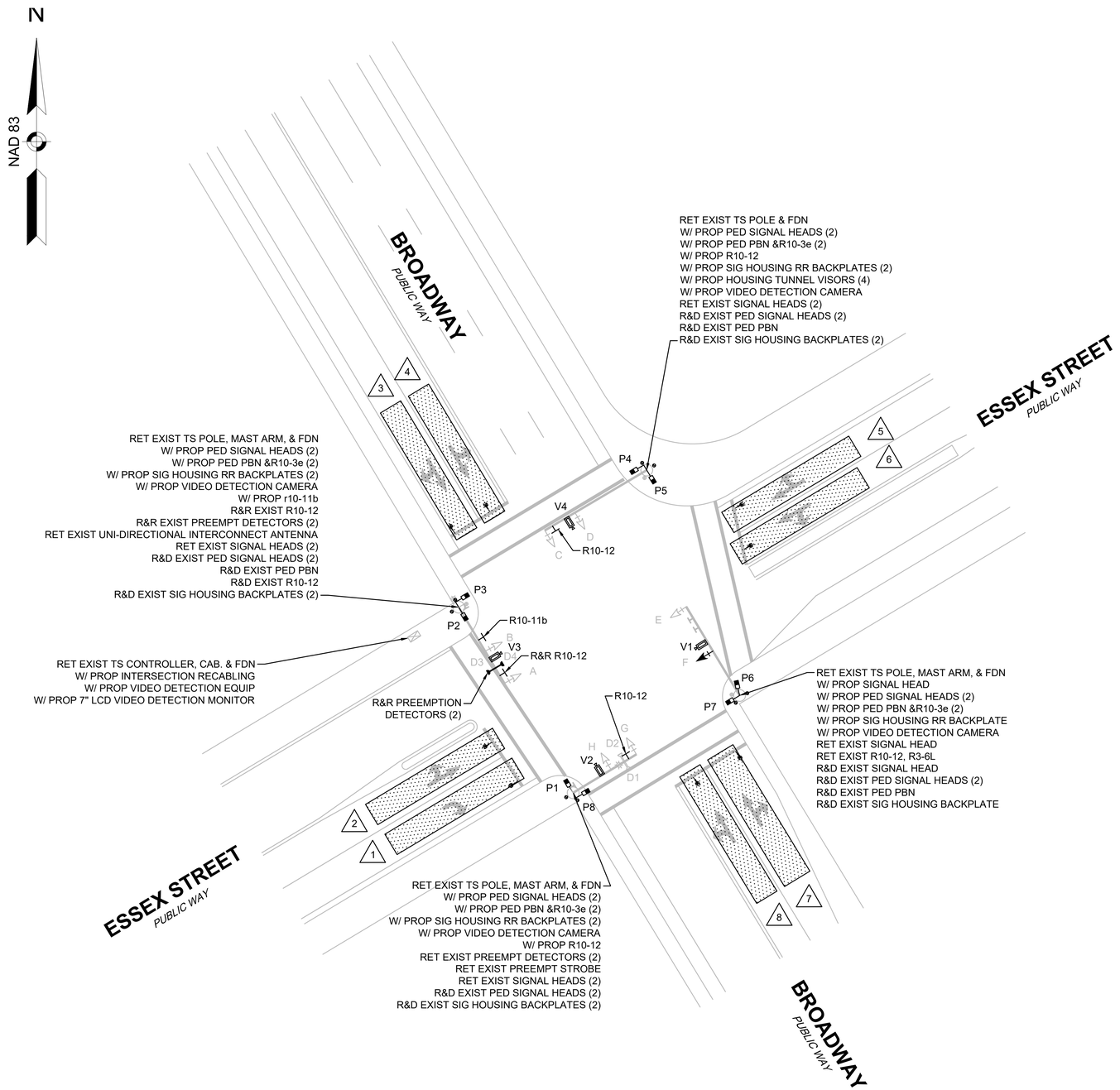

NOTES:

1. RETAIN ALL TRAFFIC SIGNAL EQUIPMENT OR INFRASTRUCTURE UNLESS OTHERWISE NOTED.
2. PEDESTRIAN PUSH BUTTONS SHALL BE PERPENDICULAR TO THE CROSSWALK PATH OF TRAVEL, WITH THE ARROW PROVIDED ON THE PUSH BUTTON PARALLEL TO THE CROSSWALK PATH OF TRAVEL.
3. WHERE TWO APS PEDESTRIAN PUSH BUTTONS ARE NOT SEPARATED BY MORE THAN 10 FEET, THE AUDIBLE WALK INDICATION SHALL BE A SPEECH WALK MESSAGE.
4. CONTRACTOR SHALL R&R ALL SIGNAL HOUSING, WHERE APPLICABLE, TO BE CENTERED ON LANE.
5. VIDEO DETECTION ZONES SHALL BE ADJUSTED IN THE FIELD BY CONTRACTOR IN PRESENCE OF AN ENGINEER.
6. EXISTING RADIO ANTENNA SHALL BE MAINTAINED.
7. ALL EXISTING LOOP DETECTIONS SHALL BE ABANDONED, LEAD-IN CABLES SHALL BE REMOVED BY THE CONTRACTOR.

LAWRENCE
LMRC RAIL TRAIL

STATE	FED. AID PROJ. NO.	SHEET NO.	TOTAL SHEETS
MA	CMQ-003S(733)X	61	245
PROJECT FILE NO.	608930		

TRAFFIC SIGNAL PLANS - 4 OF 4
BROADWAY & ESSEX STREET

608930_HD7A(TRAFFIC SIGNAL PLANS).DWG Plotted on 6-Sep-2024 10:01 AM

SEQUENCE AND TIMING CHART FOR FULLY-ACTUATED TRAFFIC SIGNAL CONTROL

BROADWAY AT AND ESSEX STREET (LAWRENCE, MASSACHUSETTS)

N

			Ø1			Ø2			Ø3			Ø4			Ø5			Ø6			Ø7			Ø8			Ø9 (PED)		
			OLA			PERM			NOT USED			PERM			NOT USED			PERM			NOT USED			PERM					
APPROACH	DIRECTION	HOUSING	1	2	3	4	5	6	7	8	9	10	11	12	13	14	15	16	17	18	19	20	21	22	23	24	25	26	27
ESSEX STREET	EB-LT	E	R	R	R	R	R	R				G	Y	R				R	R	R				R	R	R	R	R	R
ESSEX STREET	EB-R	F	R G	R Y	R	R	R	R				G	Y	R				R	R	R				R	R	R	R	R	R
ESSEX STREET	WB	A,B	R	R	R	R	R	R				R	R	R				R	R	R				G	Y	R	R	R	R
BROADWAY	NB-L	C	G	Y	R	R	R	R				R	R	R				G	Y	R				R	R	R	R	R	R
BROADWAY	NB-TR	D	R	R	R	R	R	R				R	R	R				G	Y	R				R	R	R	R	R	R
BROADWAY	SB	G,H	R	R	R	G	Y	R				R	R	R				R	R	R				R	R	R	R	R	R
PEDESTRIAN	ALL	P1-P8	DW	DW	DW	DW	DW	DW				DW	DW	DW				DW	DW	DW				DW	DW	DW	W	FDW	DW
MINIMUM INTERVAL			6									6						6						10					
VEHICLE EXTENSION			2			2						2						2						2					
MAXIMUM 1			10			20						30						30						30					
MAXIMUM 2			10			30						45						40						45					
YELLOW CLEARANCE				3.5			4.0						3.5						4.0						3.5				
RED CLEARANCE					1.5			1.0						1.5						1.0						1.5			
WALK																											7.0		
PEDESTRIAN CLEARANCE																												14.0	4.0
RECALL			OFF			MIN						OFF						MIN						OFF			OFF		
DETECTOR			NON-LOCK			NON-LOCK						NON-LOCK						NON-LOCK						NON-LOCK			LOCK		
EMERGENCY ONLY																													

PRE-EMPTION PHASING AND PRIORITY

	PREEMPT ØA - D1			PREEMPT ØB - D2			PREEMPT ØC - D3			PREEMPT ØD - D4		
FLASHING OPERATION	28	29	30	31	32	33	34	35	36	37	38	39
FR	R	R	R	R	R	R	G	Y	R	R	R	R
FR	R	R	R	R	R	R	G G	Y Y	R	R	R	R
FR	R	R	R	R	R	R	R	R	R	G	Y	R
FY	G	Y	R	R	R	R	R	R	R	R	R	R
FY	G	Y	R	R	R	R	R	R	R	R	R	R
FY	R	R	R	G	Y	R	R	R	R	R	R	R
OUT	DW	DW	DW	DW	DW	DW	DW	DW	DW	DW	DW	DW
	*			*			*			*		
		4.0			4.0			3.5			3.5	
			1.0			1.0			1.5			1.5
	Ø1&Ø6			Ø2			Ø4			Ø8		
	NEXT Ø2&Ø6			NEXT Ø2&Ø6			NEXT Ø2&Ø6			NEXT Ø2&Ø6		

SEQUENCE & TIMING NOTES:
1. AUTOMATIC FLASHING OPERATION PER M.U.T.C.D. SECTION 4D.12.
2. PEDESTRIAN PHASE UPON PUSH BUTTON ACTIVATION ONLY.
3. PERM = PERMITTED LEFT-TURN
4. OL = OVERLAP
5. MAXIMUM 1 = FREE OPERATION
   MAXIMUM 2 = M-F (3:00 PM - 7:00 PM)
6. IF THE ASSIGNED RIGHT OF WAY FOR ANY TRAFFIC MOVEMENT IS TO REMAIN IN EFFECT DURING THE NEXT CALLED PHASE, THE SIGNAL INDICATIONS FOR THAT TRAFFIC MOVEMENT WILL NOT CHANGE DURING THE CLEARANCE INTERVAL.
7. THE RIGHT OF WAY MAY BE ASSIGNED TO ANY PHASE OR ANY COMBINATION OF NON-CONFLICTING PHASES.
8. IF CALLS EXIST ON ALL PHASES, THE ASSIGNMENT OF RIGHT OF WAY SHALL BE IN ACCORDANCE WITH THE PREFERENTIAL PHASE SEQUENCE.
9. IF THE ASSIGNED RIGHT-OF-WAY FOR ANY TRAFFIC MOVEMENT IS TO CHANGE DURING THE NEXT CALLED PHASE, THE SIGNAL INDICATION FOR THAT MOVEMENT WILL DISPLAY THE APPROPRIATE CLEARANCE INTERVALS.

BROADWAY @ ESSEX STREET
LIST OF MAJOR ITEMS REQUIRED

ITEM #	QUANTITY	DESCRIPTION
816.02	1	SIGNAL HEAD (POLYCARBONATE), 5-SECTION, 12" L.E.D. MODULES, 5" RETROREFLECTIVE BACKPLATE, & TUNNEL VISORS
	8	PEDESTRIAN SIGNAL HEAD, 16" L.E.D. MODULE, COUNTDOWN INDICATOR
	8	PEDESTRIAN PUSH BUTTON (VIBRATORY) W/ AUDIBLE WARNING DEVICES (APS) & R10-3e SIGN SADDLE
	1	VIDEO DETECTION CHASSIS
	1	7" LCD VIDEO DETECTION MONITOR
	2	VIDEO DETECTION PROCESSORS [OR 1 IF SPVD SYSTEM]
	4	VIDEO DETECTION CAMERAS [OR SPVD SYSTEM CAMERA]
	6	3-SECTION - 12" MODULE BACKPLATES W/ 3" RETROREFLECTIVE STRIP
	1	4-SECTION - 12" MODULE BACKPLATES W/ 3" RETROREFLECTIVE STRIP
	4	12" MODULE TUNNEL VISORS
	1	R&R EXIST R10-12
	2	R&R EXIST EMERGENCY PREEMPT DETECTORS AND DETECTOR CABLING
816.80	8	R&D EXIST PEDESTRIAN SIGNAL HEAD
	3	R&D EXIST PEDESTRIAN PUSH BUTTON
	7	R&D EXIST HOUSING BACKPLATES
	1	R&D EXIST R10-12
832.	24 SF	SIGNS (R10-12 & R10-11b) AS NOTED ON TS EQUIPMENT

PLUS NECESSARY CONDUIT, CABLE, LABOR, MISCELLANEOUS MATERIAL AND EQUIPMENT TO COMPLETE THE INSTALLATION AND PROVIDE AN OPERATING TRAFFIC CONTROL SIGNAL.

CONSTRUCTION NOTES:
1. THE CONTRACTOR SHALL MAINTAIN EXISTING TRAFFIC SIGNAL OPERATIONS THROUGHOUT CONSTRUCTION UNTIL THE NEW TRAFFIC SIGNAL EQUIPMENT IS FULLY-OPERATIONAL.
2. THE CONSTRUCTION SHALL CONFORM WITH MASSACHUSETTS DEPARTMENT OF TRANSPORTATION, HIGHWAY DIVISION SPECIFICATIONS UNLESS OTHERWISE NOTED.
3. PEDESTRIAN PUSH BUTTONS SHALL BE PERPENDICULAR TO THE CROSSWALK PATH OF TRAVEL, WITH THE ARROW PROVIDED ON THE PUSH BUTTON PARALLEL TO THE CROSSWALK PATH OF TRAVEL.
4. EXISTING CONDUIT LAYOUT IS APPROXIMATE AND SHALL BE CONFIRMED BY THE CONTRACTOR.

VIDEO DETECTION DATA

CAMERA #	DETECTOR #	SIZE	Ø CALLED	Ø EXTEND	DELAY/EXT	OPERATION
V1	1	±8'x50'	Ø4	Ø4	0 SEC	PRESENCE
V1	2	±8'x50'	Ø4	Ø4	0 SEC	PRESENCE
V2	3	±8'x50'	Ø2	Ø2	0 SEC	PRESENCE
V2	4	±8'x50'	Ø2	Ø2	0 SEC	PRESENCE
V3	5	±8'x50'	Ø8	Ø8	0 SEC	PRESENCE
V3	6	±8'x50'	Ø8	Ø8	0 SEC	PRESENCE
V4	7	±8'x50'	Ø6	Ø6	0 SEC	PRESENCE
V4	8	±8'x50'	Ø1	Ø1&Ø6	0 SEC	PRESENCE

VIDEO DETECTOR NOTES:
1. DELAY AND EXTENSION TIMINGS SHALL BE PROGRAMMED IN THE CONTROLLER ONLY.

EMERGENCY VEHICLE PRE-EMPTION NOTES:
1. EMERGENCY VEHICLE PRE-EMPTION SIGNALS SHALL BE OPTICALLY TRANSMITTED BY OPTICAL EMITTERS MOUNTED IN EMERGENCY VEHICLES AND RECEIVED BY OPTICAL DETECTORS LOCATED AT EACH INTERSECTION.
2. EMERGENCY VEHICLE PRE-EMPTION SIGNALS SHALL BE SERVICED ON A FIRST DETECTED FIRST SERVED BASIS.
3. EMERGENCY PRE-EMPTION SHALL OVERRIDE COORDINATION.
4. IN RESPONSE TO A PRE-EMPTION SIGNAL RECEIVED AT AN INTERSECTION BY OPTICAL DETECTOR D1 (OR D2, D3, D4) THE CONTROLLER SHALL HOLD OR ADVANCE TO AND HOLD IN EMERGENCY VEHICLE PRE-EMPTION PHASE ØA (OR ØB, ØC, ØD) GREEN FOR A MINIMUM OF TEN (10) SECONDS OR A MAXIMUM OF SIXTY (60) SECONDS OR UNTIL PRE-EMPTION SIGNAL CEASES. THE CONTROLLER SHALL THEN TIME PRE-EMPTION PHASE CLEARANCE (AS NOTED IN CHART) AND SERVICE SUBSEQUENT EMERGENCY VEHICLE PRE-EMPTION PHASES AS NECESSARY.
5. NORMAL CLEARANCE SHALL BE PROVIDED ON PHASES THAT ARE TO BE TERMINATED BY PRE-EMPTION DEMAND.
6. CONFIRMATION STROBES (WHITE) SHALL BE ILLUMINATED WHENEVER ANY EMERGENCY VEHICLE PRE-EMPTION GREEN IS ON.

SIGNAL HOUSING DATA

A,B,D,E,G,H	C	F	P1-P8
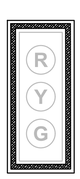	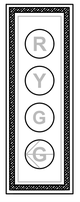	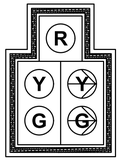	
5" BACKPLATES FOR 12" MODULES, W/ 3" RETRO-REFLECTIVE STRIP, & TUNNEL VISORS ON "C"		POLYCARBONATE W/ 12" LED MODULES, 5" BACKPLATES, 3" RETROREFLECTIVE STRIP, & TUNNEL VISORS	ALL 16" LED W/ COUNTDOWN INDICATION & VISORS

PREFERENTIAL PHASE SEQUENCE

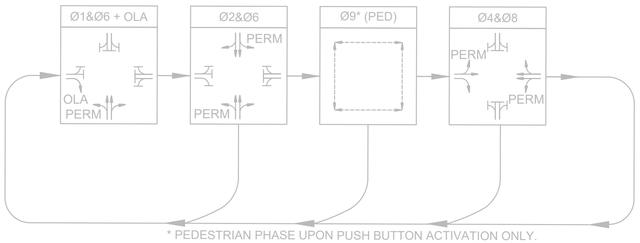

* PEDESTRIAN PHASE UPON PUSH BUTTON ACTIVATION ONLY.

NOTES:

1. ALL TEMPORARY TRAFFIC CONTROL WORK SHALL CONFORM TO THE LATEST EDITION OF THE "MANUAL ON UNIFORM TRAFFIC CONTROL DEVICES" (MUTCD) AND ALL REVISIONS, UNLESS SUPERCEDED BY THESE PLANS.
2. ALL SIGN LEGENDS, BORDERS, AND MOUNTING SHALL BE IN ACCORDANCE WITH THE MUTCD.
3. TEMPORARY CONSTRUCTION SIGNING AND ALL OTHER TRAFFIC CONTROL DEVICES SHALL BE IN PLACE PRIOR TO THE START OF ANY WORK.
4. TEMPORARY CONSTRUCTION SIGNING, BARRICADES, AND ALL OTHER NECESSARY WORK ZONE TRAFFIC CONTROL DEVICES SHALL BE REMOVED FROM THE HIGHWAY OR COVERED WHEN THEY ARE NOT REQUIRED FOR CONTROL OF TRAFFIC.
5. SIGNS AND SIGN SUPPORTS LOCATED ON OR NEAR THE TRAVELED WAY, CHANNELIZING DEVICES, BARRIERS, AND CRASH ATTENUATORS MUST PASS THE CRITERIA SET FORTH IN THE "MANUAL FOR ASSESSING SAFETY HARDWARE" (MASH).
6. CONTRACTORS SHALL NOTIFY EACH ABUTTER AT LEAST 24 HOURS IN ADVANCE OF THE START OF ANY WORK THAT WILL REQUIRE THE TEMPORARY CLOSURE OF ACCESS, SUCH AS CONDUIT INSTALLATION, EXISTING PAVEMENT EXCAVATION, TEMPORARY DRIVEWAY PAVEMENT PLACEMENT, AND SIMILAR OPERATIONS.
7. THE FIRST TEN PLASTIC DRUMS OF A TAPER SHALL BE MOUNTED WITH SEQUENTIAL FLASHING LIGHTS WHEN USED FOR NIGHT WORK BETWEEN DUSK AND DAWN.
8. THE ADVISORY SPEED LIMIT, IF REQUIRED, SHALL BE DETERMINED BY THE ENGINEER.
9. DISTANCES SHOWN IN THIS DOCUMENT MY BE ADJUSTED IN THE FIELD BY THE ENGINEER DUE TO SITE CONSTRAINTS.
10. MAXIMUM SPACING OF TRAFFIC DEVICES IN A TAPER (DRUMS OR CONES) IS EQUAL IN FEET TO THE SPEED LIMIT IN MPH.
11. MINIMUM LANE WIDTH IS TO BE 11 FEET UNLESS OTHERWISE SHOWN. MINIMUM LANE WIDTH TO BE MEASURED FROM THE EDGE OF DRUMS OR MEDIAN BARRIER.
12. ALL SIGNS SHALL BE MOUNTED ON THEIR OWN STANDARD SIGN SUPPORTS.
13. TWO DIRECTIONS OF TRAVEL SHALL BE MAINTAINED ON ALL ROADS WITHIN THE PROJECT LIMITS BEFORE 9:00 AM & AFTER 3:00 PM
14. THE CONTRACTOR SHALL TEMPORARILY REMOVE TELEPHONE MANHOLE CASTINGS AND RISERS, PLACE GRAVEL SUB-BASE MATERIAL AND PLACE STEEL PLATES OVER THE MANHOLE STRUCTURES PRIOR TO OPENING THE ROADWAY TO TRAFFIC IN THE VICINITY OF THE EXISTING TELEPHONE MANHOLES AND CONDUIT.
15. ALL WORK SHALL BE PERFORMED IN ACCORDANCE WITH LAWRENCE STANDARD WORK HOURS FOR CONSTRUCTION AS STATED IN THE SPECIAL PROVISIONS: MONDAY THROUGH FRIDAY (EXCLUDING HOLIDAYS) 7:00 AM TO 3:00 PM

- REFLECTORIZED PLASTIC DRUM OR 36" CONE
- P/F POLICE/FLAGGER DETAIL
- TYPE III BARRICADE
- CHANGEABLE MESSAGE SIGN
- ARROW BOARD
- WORK ZONE
- DIRECTION OF TRAFFIC
- IMPACT ATTENUATOR
- MEDIAN BARRIER
- MEDIAN BARRIER WITH WARNING LIGHTS
- WORK VEHICLE
- TRUCK MOUNTED ATTENUATOR
- TRAFFIC OR PEDESTRIAN SIGNAL
- SIGN

SUGGESTED WORK ZONE WARNING SIGN SPACING

ROAD TYPE	DISTANCE BETWEEN SIGNS (FEET)		
	A	B	C
LOCAL OR LOW VOLUME ROADWAYS	350	350	350
MOST OTHER ROADWAYS	500	500	500
FREEWAYS AND EXPRESSWAYS	1,000	1,500	2,640

ROAD TYPE TO BE DETERMINED BY MASSDOT OFFICE OF TRANSPORTATION PLANNING.

DISTANCES ARE SHOWN IN FEET. THE COLUMN HEADINGS A, B, AND C ARE THE DIMENSIONS SHOWN IN THE DETAIL/ TYPICAL SETUP FIGURES. THE A DIMENSION IS THE DISTANCE FROM THE TRANSITION OR POINT OF RESTRICTION TO THE FIRST SIGN. THE B DIMENSION IS THE DISTANCE BETWEEN THE FIRST AND SECOND SIGNS. THE C DIMENSION IS THE DISTANCE BETWEEN THE SECOND AND THIRD SIGNS. (THE "THIRD" SIGN IS THE FIRST ONE TYPICALLY ENCOUNTERED BY A DRIVER APPROACHING A TEMPORARY TRAFFIC CONTROL (TTC) ZONE.)

THE "THIRD" SIGN ABOVE IS TYPICALLY REFERRED TO AS AN "ADVANCE WARNING" SIGN ON THE TTCP SETUPS. THESE ADVANCE WARNING SIGNS ARE LOCATED PRIOR TO THE PROJECT LIMITS ON ALL APPROACHES (i.e. THE W20-1 SERIES (ROAD WORK XX FT) SIGNS), AND USUALLY REMAIN FOR THE DURATION OF THE PROJECT. ADDITIONAL SIGNS (i.e. "RIGHT LANE CLOSED 1 MILE" AND "LEFT LANE CLOSED 1 MILE") HAVE BEEN SHOWN IN SOME FIGURES AS EXAMPLES OF REINFORCEMENT SIGN PLACEMENT BUT ARE USED IN RARE OCCASIONS.

THE FIRST AND SECOND WARNING SIGNS ABOVE ARE REFERRED TO AS THE OPERATIONAL (DAY-TO-DAY) WORK ZONE SIGNS AND MAY BE MOVED DEPENDING ON WHERE THE SPECIFIC ROADWAY WORK FOR THAT DAY IS LOCATED.

R2-10a SIGNS SHALL BE PLACED BETWEEN THE SECOND AND THIRD SIGNS AS DESCRIBED ABOVE.

R2-10a, R2-10e, AND W20-1 SERIES SIGNS ARE TO BE INCLUDED ON ALL DETAILS/TYPICAL SETUPS.

TAPER LENGTH CRITERIA FOR TEMPORARY TRAFFIC CONTROL ZONES

TYPE OF TAPER	TAPER LENGTH (L)*
MERGING TAPER	AT LEAST L
SHIFTING TAPER	AT LEAST 0.5L
SHOULDER TAPER	AT LEAST 0.33L
ONE-LANE, TWO-WAY TRAFFIC TAPER	50 FT MIN. 100 FT MAX.
DOWNSTREAM TAPER	50 FT MIN. 100 FT MAX. PER LANE

FORMULAS FOR DETERMINING TAPER LENGTHS

SPEED LIMIT (S)	TAPER LENGTH (L) FEET
40 MPH OR LESS	$L = \frac{WS^2}{60}$
45 MPH OR MORE	L= WS

WHERE: L = TAPER LENGTH IN FEET

W = WIDTH OF OFFSET IN FEET

S = POSTED SPEED LIMIT, OR OFF-PEAK 85TH-PERCENTILE SPEED PRIOR TO WORK STARTING, OR THE ANTICIPATED OPERATING SPEED IN MPH

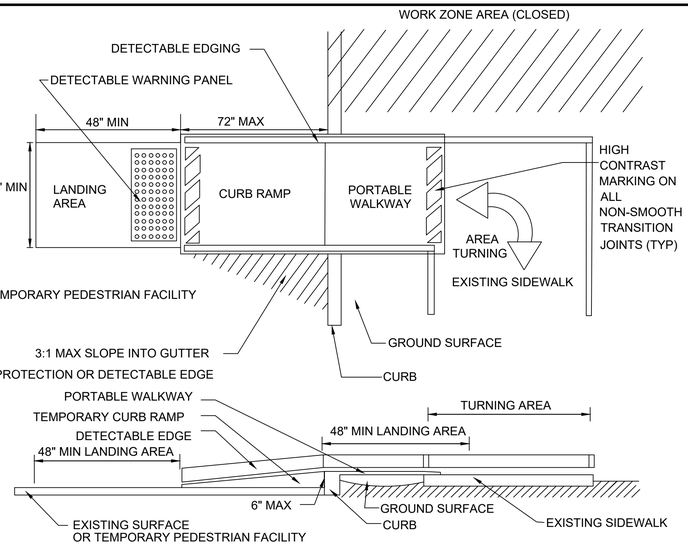

PEDESTRIAN TYPICAL DETAILS

NOTES:

1. CURB RAMPS SHALL BE 48 IN. MINIMUM WIDTH WITH A FIRM, STABLE AND NON-SLIP SURFACE.
2. PROTECTIVE EDGING WITH A 2 IN. MINIMUM HEIGHT SHALL BE INSTALLED WHEN THE CURB RAMP OR LANDING PLATFORM HAS A VERTICAL DROP OF 6 IN. OR GREATER OR HAS A SIDE APRON SLOP STEEPER THAN 1:3 (33%). PROTECTIVE EDGING SHOULD BE CONSIDERED WHEN THE CURB RAMPS OR LANDING PLATFORMS HAVE A VERTICAL DROP OF 3 IN. OR MORE.
3. PROTECTABLE EDGING WITH 6 IN. MINIMUM HEIGHT AND CONTRASTING COLOR SHALL BE INSTALLED ON ALL CURB RAMP LANDINGS WHERE THE WALKWAY CHANGES DIRECTION (TURNS).
4. THE CURB RAMP WALKWAY AND LANDING AREA SURFACE SHALL BE OF A SOLID CONTINUOUS CONTRASTING COLOR ABUTTING UP TO THE EXISTING SIDEWALK.
5. CURB RAMPS AND LANDINGS SHOULD HAVE A 1:50 (2%) MAX CROSS-SLOPE.
6. CLEAR SPACE OF 48x48 IN. MINIMUM SHALL BE PROVIDED ABOVE AND BELOW THE CURB RAMP.
7. WATER FLOW IN THE GUTTER SYSTEM SHALL HAVE MINIMAL RESTRICTION.
8. LATERAL JOINTS OR GAPS BETWEEN SURFACES SHALL BE LESS THAN 0.5 IN. WIDTH.
9. CHANGES BETWEEN SURFACE HEIGHTS SHOULD NOT EXCEED 0.5 IN. LATERAL EDGES SHOULD BE VERTICAL UP TO 0.25 IN. HIGH, AND BEVELED AT 1:2 BETWEEN 0.25 IN. AND 0.5 IN. HEIGHT.
10. IF A TEMPORARY PEDESTRIAN RAMP LEADS TO A CROSSWALK, THEN A DETECTABLE WARNING PAD MUST BE ADHERED TO THE BASE OF THE RAMP. IF IT LEADS TO A PROTECTED PEDESTRIAN BYPASS THAT DOES NOT CONFLICT WITH VEHICULAR TRAFFIC, THEN A PAD SHALL NOT BE INSTALLED ON THE RAMP.

LAWRENCE
LMRC RAIL TRAIL

STATE	FED. AID PROJ. NO.	SHEET NO.	TOTAL SHEETS
MA	CMQ-003S(733)X	62	245
PROJECT FILE NO.	608930		

TEMPORARY TRAFFIC CONTROL PLANS - 1 OF 4

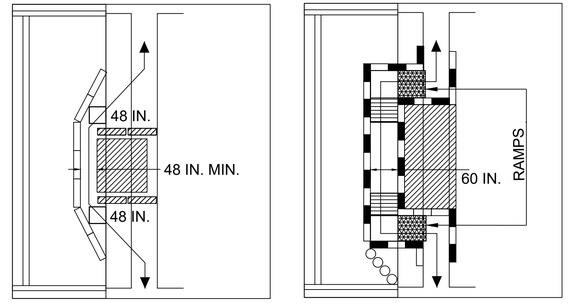

NOTES:

1. PEDESTRIAN DETOUR ROUTES MUST BE ADA/MAAB COMPLIANT.
2. WHEN EXISTING PEDESTRIAN FACILITIES ARE DISRUPTED, CLOSED, OR RELOCATED IN A WORK ZONE, TEMPORARY FACILITIES SHALL BE PROVIDED. THEY SHALL BE DETECTABLE AND INCLUDE ACCESSIBILITY FEATURES CONSISTENT WITH THE FEATURES PRESENT IN THE EXISTING PEDESTRIAN FACILITY.
3. A PEDESTRIAN CHANNELIZING DEVICE THAT IS DETECTABLE BY A PERSON WITH A VISUAL DISABILITY TRAVELING WITH THE AID OF A LONG CANE SHALL BE PLACED ALONG THE FULL WIDTH OF THE CLOSED SIDEWALK.
4. WHEN USED, TEMPORARY RAMPS SHALL COMPLY WITH AMERICANS WITH DISABILITIES ACT.
5. THE ALTERNATE PATHWAY SHOULD HAVE A SMOOTH CONTINUOUS HARD SURFACE FOR THE ENTIRE LENGTH OF THE TEMPORARY PEDESTRIAN FACILITY.
6. THE TEMPORARY SIDEWALK SHOULD BE A MINIMUM OF 5 FEET WIDE.
7. THE PROTECTIVE REQUIREMENTS OF A TTC WORK ZONE MAY HAVE AN IMPACT IN DETERMINING THE NEED FOR TEMPORARY TRAFFIC BARRIERS AND THEIR USE IN PROVIDING PEDESTRIAN DELINEATION SHOULD BE BASED ON ENGINEERING JUDGMENT.
8. THE PEDESTRIAN DETAILS SHOW ONLY CONTROLS FOR PEDESTRIAN TRAFFIC; VEHICULAR TRAFFIC SHOULD BE DESIGNED AS SHOWN ELSEWHERE. THESE DETAILS ARE USED IN CONJUNCTION WITH THE PROPOSED LANE CLOSURE DETAILS AND DURING CONSTRUCTIONS STAGING AS DETERMINED BY THE ENGINEER.
9. AUDIBLE INFORMATION DEVICES SHOULD BE CONSIDERED WHERE MIDBLOCK CLOSINGS AND CHANGED CROSSWALK AREAS CAUSE INADEQUATE COMMUNICATION TO BE PROVIDED TO PEDESTRIANS WHO HAVE VISUAL DISABILITIES.
10. EXISTING AUDIBLE DEVICES NO LONGER APPLICABLE DUE TO CONSTRUCTION SHALL BE DISABLED.

AUDIBLE DEVICES

FOR LONG TERM SIDEWALK CLOSURES (AT A MINIMUM OVERNIGHT) A FORM OF SPEECH MESSAGING FOR PEDESTRIANS WITH VISUAL DISABILITIES SHALL BE PROVIDED. AUDIBLE INFORMATION DEVICES SUCH AS DETECTABLE BARRIERS OR BARRICADES AND OTHER PASSIVE PEDESTRIAN ACTIVATION (MOTION ACTIVATED) DEVICES SHOULD BE CONSIDERED FOR THESE CASES. THESE AUDIBLE DEVICES CAN BE MOUNTABLE OR STAND ALONE.

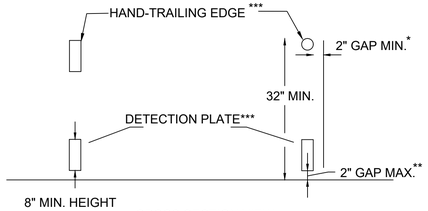

CROSS SECTION VIEW

NOTES:
* THERE SHALL BE A 2 INCH GAP BETWEEN THE HAND-TRAILING EDGE AND ITS SUPPORT.

** A MAXIMUM 2 INCH GAP BETWEEN THE BOTTOM OF THE BOTTOM RAIL AND THE SURFACE MAY BE USED TO PROVIDE DRAINAGE.

*** THE HAND-TRAILING EDGE AND DETECTION PLATE SHALL BE CONTINUOUS THROUGHOUT THE LENGTH OF THE PATH SUCH THAT A PEDESTRIAN USER WITH A LONG CANE CAN FOLLOW IT.

PEDESTRIAN CHANNELIZING DEVICE

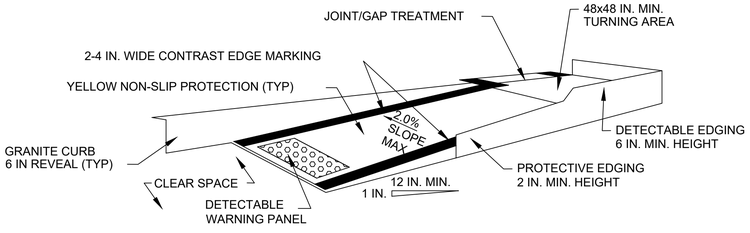

TEMPORARY CURB RAMP-PARALLEL TO CURB

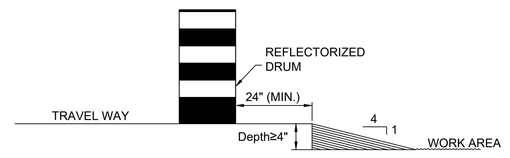

LATERAL DROP OFF-DETAIL
NOT TO SCALE

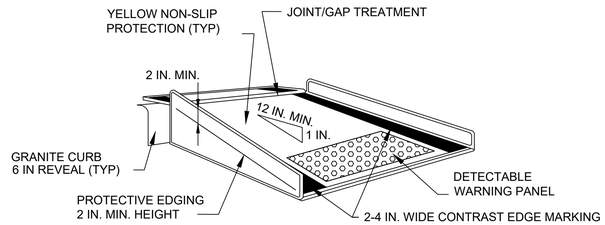

TEMPORARY CURB RAMP-PERPENDICULAR TO CURB

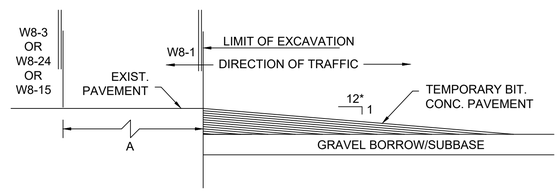

* - INCREASE SLOPE RATIO FOR HIGHER SPEEDS

LONGITUDINAL DROP-OFF DETAIL
NOT TO SCALE

LATERAL AND LONGITUDINAL DROP-OFF DETAILS

608930_HD8(TEMPORARY TRAFFIC CONTROL PLAN).DWG Plotted on 6-Sep-2024 9:03 AM

LAWRENCE
LMRC RAIL TRAIL

STATE	FED. AID PROJ. NO.	SHEET NO.	TOTAL SHEETS
MA	CMQ-003S(733)X	63	245
	PROJECT FILE NO. 608930		

TEMPORARY TRAFFIC CONTROL PLANS - 2 OF 4

608930_HDR(TEMPORARY TRAFFIC CONTROL PLAN).DWG Plotted on 6-Sep-2024 9:03 AM

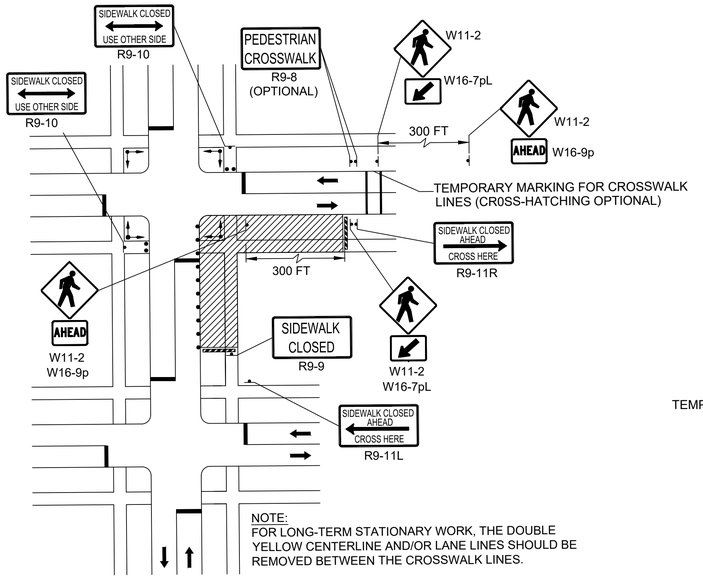

NOTE:
FOR LONG-TERM STATIONARY WORK, THE DOUBLE YELLOW CENTERLINE AND/OR LANE LINES SHOULD BE REMOVED BETWEEN THE CROSSWALK LINES.

PEDESTRIAN DETOUR

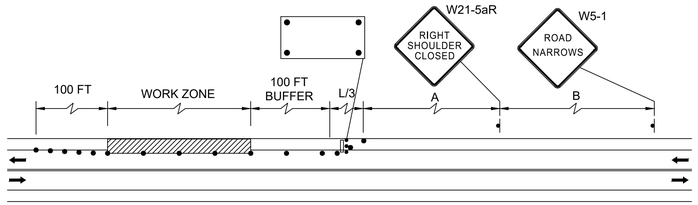

TWO LANE ROAD SHOULDER CLOSED

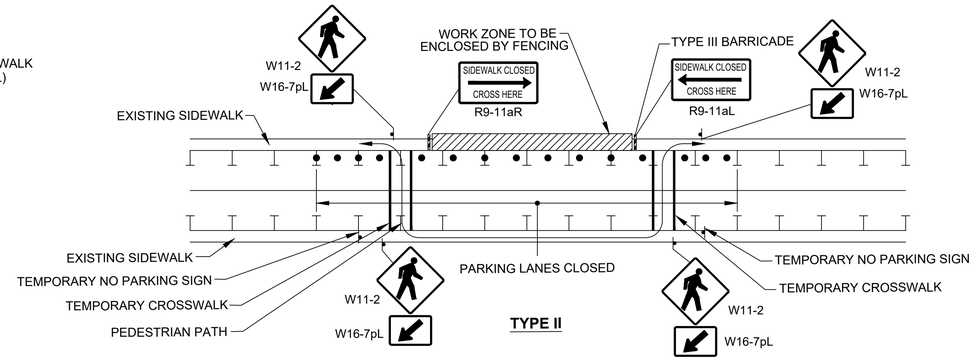

TYPE II

NOTES:
1. ADDITIONAL ADVANCE WARNING MAY BE NECESSARY.
2. CONTROLS ONLY FOR PEDESTRIAN TRAFFIC ARE SHOWN. VEHICULAR TRAFFIC SHOULD BE HANDLED AS SHOWN ELSEWHERE.
3. STREET LIGHTING SHOULD BE CONSIDERED WHEN LOCATING CONTROL DEVICES.
4. IF THE WORK ZONE DOES NOT PERMIT PEDESTRIANS TO TRAVEL ADJACENT TO IT AS SHOWN IN PEDESTRIAN BYPASS TYPE I, TEMPORARY CROSSWALKS WITH APPROPRIATE SIGNS SHOULD BE INSTALLED TO CROSS PEDESTRIANS TO THE OPPOSITE SIDE OF THE STREET AS SHOWN IN PEDESTRIAN BYPASS TYPE II, AND AS DIRECTED BY THE ENGINEER. TEMPORARY CURB RAMPS WILL BE REQUIRED AT ALL TEMPORARY CROSSWALK LOCATIONS.
5. BYPASS IS TO BE USED IN CONJUCTION WITH THE PROPOSED LANE CLOSURE DETAILS AND DURING CONSTRUCTION STAGING, AS DIRECTED BY THE ENGINEER.
6. THE TEMPORARY SIDEWALK SHOULD BE A MINIMUM OF 4 FEET WIDE. IF THIS WALKWAY EXCEEDS 200 FEET THEN A 5 FOOT X 5 FOOT PASSING ZONE. (FOR SHORT TERM SETUPS < 10 HOURS, THIS CONDITION MAY BE WAIVED. A NOTE WOULD NEED TO BE INCLUDED IN THE TTCP THAT STATES HOW THE CONTRACTOR SHOULD ADDRESS THIS ISSUE.)

PEDESTRIAN BYPASS

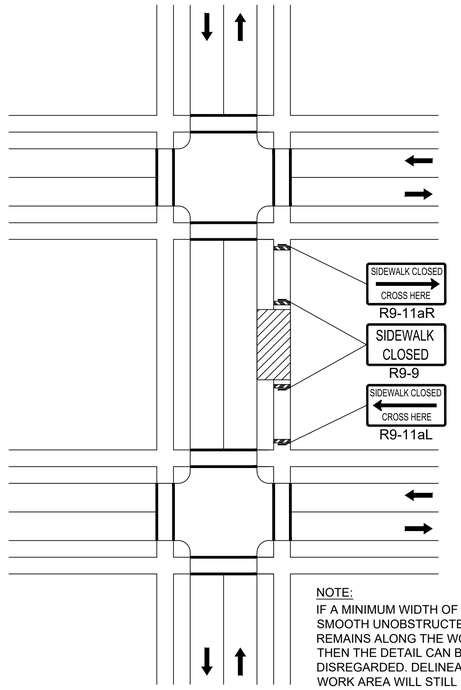

NOTE:
IF A MINIMUM WIDTH OF 48" OF SOLID SMOOTH UNOBSTRUCTED SURFACE REMAINS ALONG THE WORK AREA THEN THE DETAIL CAN BE DISREGARDED. DELINEATION OF THE WORK AREA WILL STILL BE REQUIRED. All PEDESTRIAN DETOUR ROUTES SHALL BE ADA/MAAB COMPLIANT IN THEIR ENTIRETY.

SIDEWALK CLOSED WITHOUT DETOUR

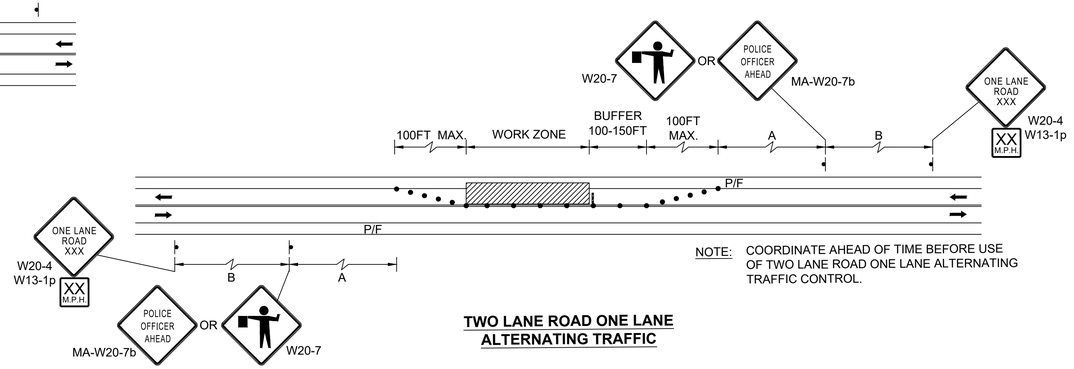

NOTE: COORDINATE AHEAD OF TIME BEFORE USE OF TWO LANE ROAD ONE LANE ALTERNATING TRAFFIC CONTROL.

TWO LANE ROAD ONE LANE ALTERNATING TRAFFIC

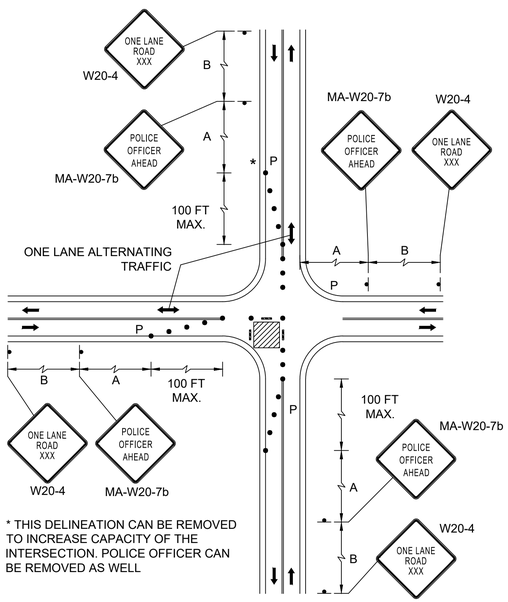

* THIS DELINEATION CAN BE REMOVED TO INCREASE CAPACITY OF THE INTERSECTION. POLICE OFFICER CAN BE REMOVED AS WELL

SINGLE LANE APPROACH ONE QUADRANT CLOSURE

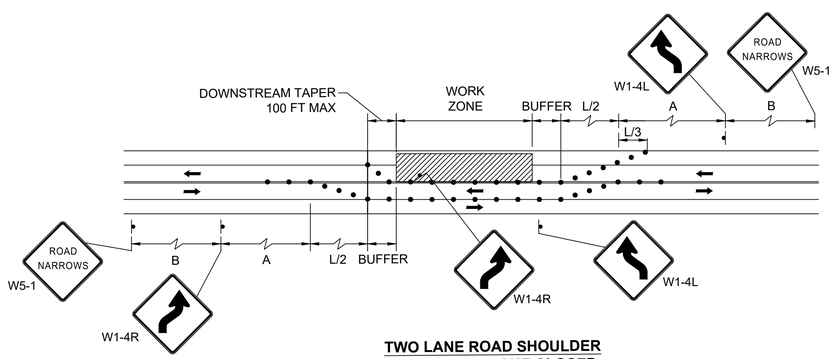

TWO LANE ROAD SHOULDER AND TRAVEL LANE CLOSED

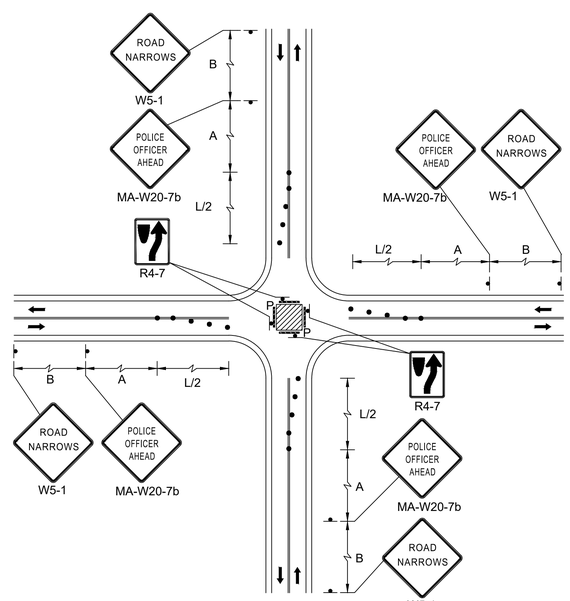

SINGLE LANE APPROACH CENTER CLOSURE

TEMPORARY TRAFFIC CONTROL SIGN SUMMARY

IDENTIFICATION NUMBER	SIZE OF SIGN (in)			TEXT DIMENSIONS (in)			COLOR			NUMBER OF SIGNS REQUIRED	UNIT AREA (SF)	TOTAL AREA (SF)
	WIDTH	HEIGHT	LEGEND	LETTER HEIGHT	VERTICAL SPACING	ARROW RTE. MKR	BACK-GROUND	LEGEND	BORDER			
MA-D3-1a	56	12	SEE RIGHT	6D/4D	3 3	N/A	FL. ORANGE WHITE	BLACK BLACK	BLACK BLACK	8	4.67	37.33
MA-R2-10a	48	36	WORK ZONES SPEEDING FINES DOUBLED	MASSDOT STANDARD SIGN			FL. ORANGE WHITE	BLACK BLACK	BLACK BLACK	13	12.00	156.00
MA-R2-10e	36	48	END ROAD WORK DOUBLE FINES END				FL. ORANGE WHITE	BLACK BLACK	BLACK BLACK	13	12.00	156.00
R4-7	24	30		SEE 2009 MANUAL ON UNIFORM TRAFFIC CONTROL DEVICES FOR STREETS AND HIGHWAYS			WHITE	BLACK	BLACK	4	5.00	20.00
R5-10a	30	36	PEDESTRIANS BICYCLES MOTOR-DRIVEN CYCLES PROHIBITED				WHITE	BLACK	BLACK	2	#####	#####
R9-8	36	18	PEDESTRIAN CROSSWALK				WHITE	BLACK	BLACK	2	4.50	9.00
R9-9	24	12	SIDEWALK CLOSED				WHITE	BLACK	BLACK	5	2.00	10.00
R9-10	24	12	SIDEWALK CLOSED USE OTHER SIDE				WHITE	BLACK	BLACK	2	2.00	4.00
R9-11aL	24	18	SIDEWALK CLOSED AHEAD CROSS HERE				WHITE	BLACK	BLACK	4	3.00	12.00
R9-11aR	24	18	SIDEWALK CLOSED AHEAD CROSS HERE				WHITE	BLACK	BLACK	4	3.00	12.00
R11-2	48	30	ROAD CLOSED				WHITE	BLACK	BLACK	4	10.00	40.00
R11-3	60	30	ROAD CLOSED 100 FT AHEAD LOCAL TRAFFIC ONLY				WHITE	BLACK	BLACK	1	12.50	12.50
R11-3a	60	30	ROAD CLOSED 500 FT AHEAD LOCAL TRAFFIC ONLY				WHITE	BLACK	BLACK	1	12.50	12.50
R11-4	60	30	ROAD CLOSED TO THRU TRAFFIC				WHITE	BLACK	BLACK	2	12.50	25.00
W1-4L	36	36					FL. ORANGE	BLACK	BLACK	2	9.00	18.00
W1-4R	36	36					FL. ORANGE	BLACK	BLACK	2	9.00	18.00
W5-1	36	36	ROAD NARROWS				FL. ORANGE	BLACK	BLACK	7	9.00	63.00
W11-2	36	36					FL. YELLOW/ GREEN	BLACK	BLACK	8	9.00	72.00
W13-1p	18	18	XX MPH				FL. ORANGE	BLACK	BLACK	2	2.25	4.50
W16-7pL	24	12					FL. YELLOW/ GREEN	BLACK	BLACK	6	2.00	12.00
W16-9p	24	12	AHEAD				FL. YELLOW/ GREEN	BLACK	BLACK	2	2.00	4.00
W20-1	36	36	ROAD WORK AHEAD				FL. ORANGE	BLACK	BLACK	13	9.00	117.00
W20-2	36	36	DETOUR AHEAD				FL. ORANGE	BLACK	BLACK	9	9.00	81.00
W20-4	36	36	ONE LANE ROAD AHEAD				FL. ORANGE	BLACK	BLACK	6	9.00	54.00
W21-5aR	36	36	RIGHT SHOULDER CLOSED				FL. ORANGE	BLACK	BLACK	1	9.00	9.00
W20-7	36	36					FL. ORANGE	BLACK	BLACK	2	9.00	18.00

TEMPORARY TRAFFIC CONTROL SIGN SUMMARY (CONTINUED)

IDENTIFICATION NUMBER	SIZE OF SIGN (in)			TEXT DIMENSIONS (in)			COLOR			NUMBER OF SIGNS REQUIRED	UNIT AREA (SF)	TOTAL AREA (SF)
	WIDTH	HEIGHT	LEGEND	LETTER HEIGHT	VERTICAL SPACING	ARROW RTE. MKR	BACK-GROUND	LEGEND	BORDER			
D3-1	36	12	Lowell St	SEE 2009 MANUAL ON UNIFORM TRAFFIC CONTROL DEVICES FOR STREETS AND HIGHWAYS			FL. ORANGE	BLACK	BLACK	10	3.00	30.00
M4-8	24	12	DETOUR				FL. ORANGE	BLACK	BLACK	1	2.00	2.00
M4-8a	24	18	END DETOUR				FL. ORANGE	BLACK	BLACK	4	3.00	12.00
M4-9L	30	24	DETOUR				FL. ORANGE	BLACK	BLACK	9	5.00	45.00
M4-9aL	30	24	DETOUR				FL. ORANGE	BLACK	BLACK	4	5.00	20.00
M4-9R	30	24	DETOUR				FL. ORANGE	BLACK	BLACK	7	5.00	35.00
M4-9aR	30	24	DETOUR				FL. ORANGE	BLACK	BLACK	3	5.00	15.00
M4-9V	30	24	DETOUR				FL. ORANGE	BLACK	BLACK	12	5.00	60.00

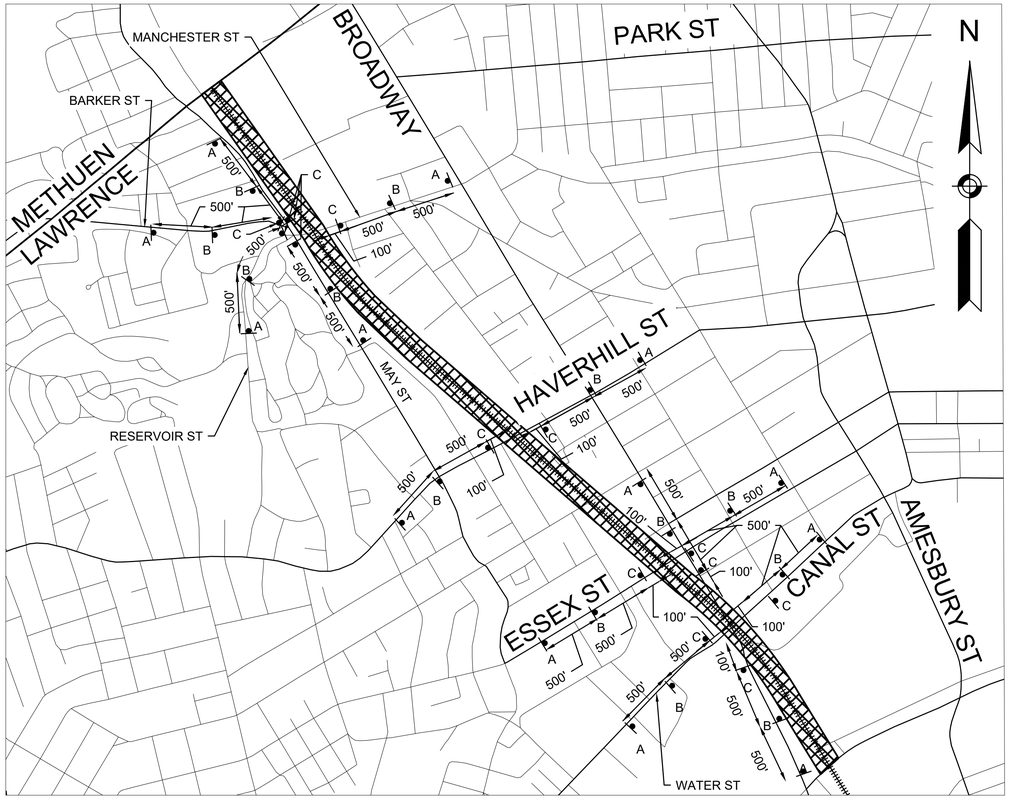

NOTE:

ON SIDE STREETS, ADVANCE SIGNS (W20-1 AND MA-R2-10a) SHALL BE SPACED 350' APART BEGINNING AT MA-R2-10e WHICH WILL BE LOCATED 100' OFF THE LIMIT OF WORK UNLESS OTHERWISE NOTED.

ADVANCED SIGNING SCHEMATIC

N.T.S.

Manchester St

MA-D3-1a

LEGEND		
A	B	C
ROAD WORK AHEAD	WORK ZONES SPEEDING FINES DOUBLED	END ROAD WORK DOUBLE FINES END
W20-1	*MA-R2-10a*	*MA-R2-10e*

LAWRENCE
LMRC RAIL TRAIL

STATE	FED. AID PROJ. NO.	SHEET NO.	TOTAL SHEETS
MA	CMQ-003S(733)X	64	245
PROJECT FILE NO.	608930		

TEMPORARY TRAFFIC CONTROL PLANS - 3 OF 4

608930_HDR(TEMPORARY TRAFFIC CONTROL PLAN).DWG Plotted on 6-Sep-2024 9:04 AM

PCMS MESSAGE TEXT

14 DAYS PRIOR TO START OF WORK	ROAD WORK BEGINS	XX/XX/XX USE CAUTION	7 DAYS AFTER START OF CONSTRUCTION	LOWELL STREET CLOSURE	FOLLOW DETOUR

LAWRENCE
LMRC RAIL TRAIL

STATE	FED. AID PROJ. NO.	SHEET NO.	TOTAL SHEETS
MA	CMQ-003S(733)X	65	245
	PROJECT FILE NO. 608930		

TEMPORARY TRAFFIC CONTROL PLANS - 4 OF 4

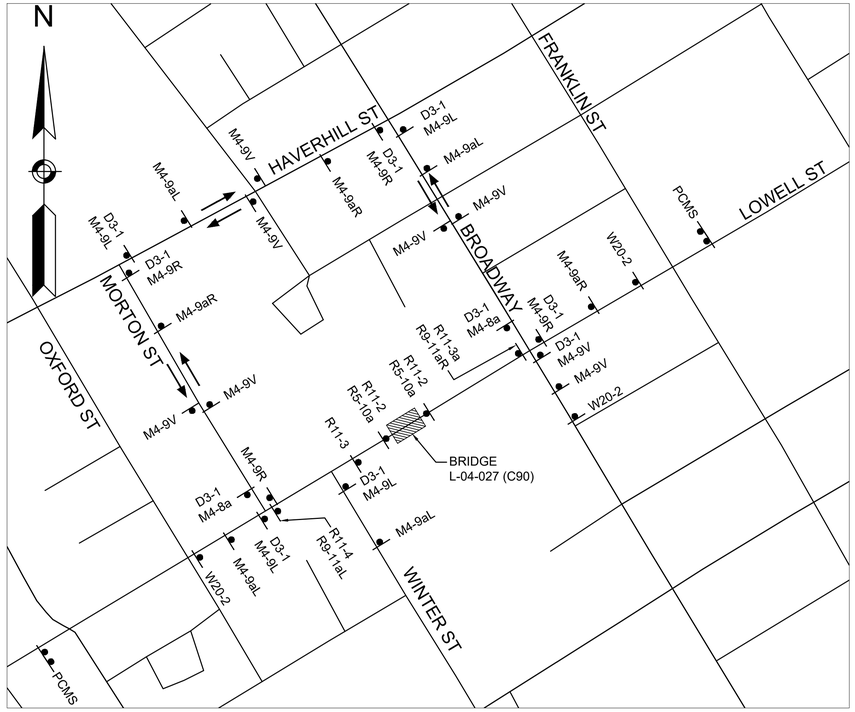

LOWELL STREET DETOUR
N.T.S.

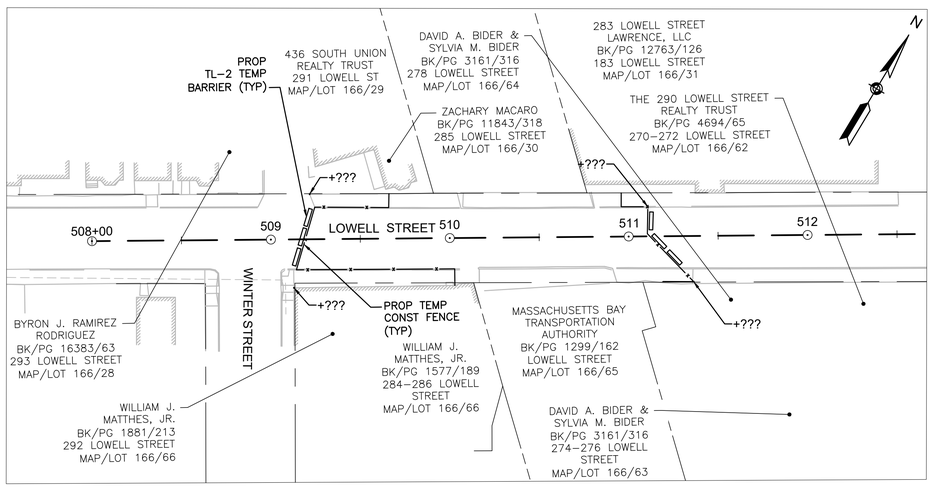

LOWELL STREET BRIDGE CLOSURE SCHEMATIC
1" = 40'

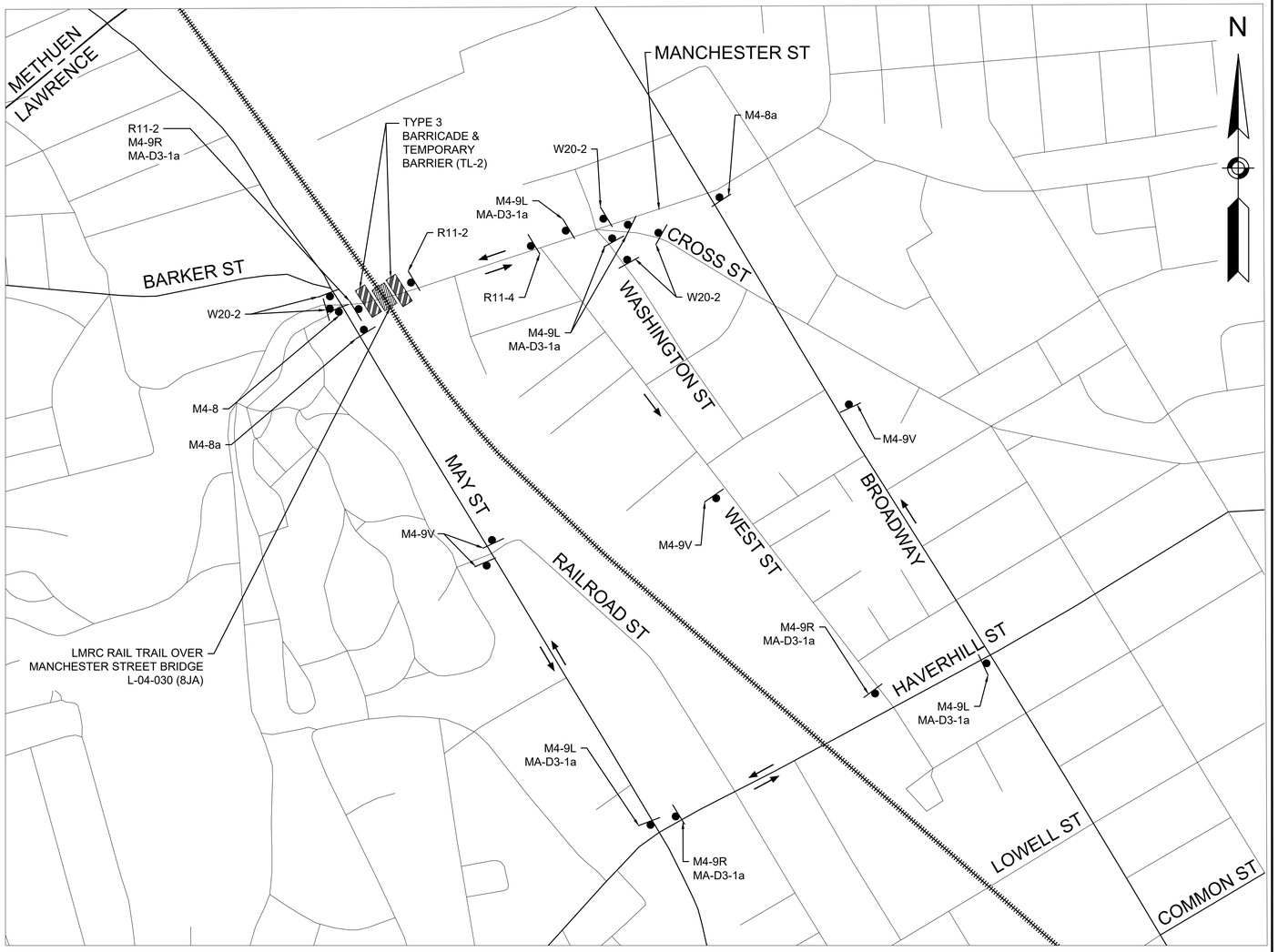

MANCHESTER STREET DETOUR
N.T.S.

DETOUR NOTES:

1. THE MERRIMACK VALLEY REGIONAL TRANSIT AUTHORITY (MVRTA) BUS ROUTE 24 TRAVERSES THE PROJECT. THE CONTRACTOR SHALL NOTIFY THE MVRTA AT LEAST 30 DAYS PRIOR TO THE CLOSURE AND/OR RELOCATION OF AN EXISTING BUS STOP OR REROUTING OF BUS ROUTE DUE TO CONSTRUCTION DETOUR.
2. IN THE EVENT OF BUS STOP CLOSURE FOR CONSTRUCTION ACTIVITIES, THE CONTRACTOR SHALL PROVIDE AN ALTERNATIVE LOCATION, PROVIDING THE NECESSARY TEMPORARY SIGNAGE, AS DIRECTED BY MVRTA.
3. CONTRACTOR SHALL REMOVE OR COVER DETOUR SIGNS WHEN NOT IN USE.
4. DETOUR MAY ONLY BE IMPLEMENTED BETWEEN THE HOURS OF 9 AM AND 3 PM, MON-FRI, UNLESS OTHERWISE DIRECTED BY THE ENGINEER.
5. POLICE DETAILS SHALL BE STATIONED ON EITHER END OF THE WORK ZONE TO STOP WESTBOUND TRAFFIC, AS NEEDED, TO ALLOW LARGE TRUCKS, BUSES, AND EMERGENCY VEHICLES TRAVELING IN THE EASTBOUND THROUGH THE WORK ZONE. EMERGENCY ACCESS TO AND FROM AMES STREET AND ALL OTHER SIDE STREETS SHALL BE PROVIDED THROUGH THE WORK ZONE AT ALL TIMES.

608930_HD8(TEMPORARY TRAFFIC CONTROL PLAN).DWG Plotted on 6-Sep-2024 9:04 AM

LAWRENCE
LMRC RAIL TRAIL

STATE	FED. AID PROJ. NO.	SHEET NO.	TOTAL SHEETS
MA	CMQ-003S(733)X	66	245
PROJECT FILE NO.	608930		

UTILITY PLANS - 1 OF 16

608930_HDBA(UTILITY PLANS).DWG Plotted on 7-Sep-2024 12:00 PM

EXISTING INVERT TABLE
CB1
RIM=50.98'

SMH1
RIM=50.16'
INV.(o)=40.91
INV.(b)=40.78
INV.(c)=42.75

N/F
NUNEZ, LLC
BK/PG 11297/139
5 – 7 MERRIMACK ST
PL 15990
122–26

N/F
ESSEX COMPANY
BK/PG –/–
SOUTH BROADWAY/
MERRIMACK STREET
122–6

N/F
MASSACHUSETTS BAY
TRANSPORTATION AUTHORITY
BK/PG 1299/162
SALEM STREET
121–48

N/F
MERRIMACK STREET, LLC
BK/PG 12934/193
11 MERRIMACK ST
PL 13208
122–23

NF
CHRISTOS ROGARIS, TRUSTEE OF
J.P. REALTY TRUST
BK/PG 2484/97
8 SOUTH BROADWAY
PL 5660
122–5

N/F
18–20 BROADWAY, LLC
BK/PG 14201/101
2 SOUTH BROADWAY
PL 5660
122–4

N/F
ESSEX COMPANY
BK/PG –/–
PARKER STREET
103–2

N/F
MERRIMACK STREET
REDEVELOPMENT
AUTHORITY, LLC
BK/PG 12208/202
SOUTH CANAL ST
PL 13208
PL 13866
122–34

N/F
MASSACHUSETTS BAY
TRANSPORTATION AUTHORITY
BK/PG 1299/162
122–119

N/F
CITY OF LAWRENCE
BK/PG 15538/125
7 SOUTH CANAL ST
123–1

N/F
ESSEX COMPANY
BK/PG –/–
PARKER STREET
103–3

SOUTH BROADWAY (ROUTE 28)
(PUBLIC 66.0' WIDE)

MERRIMACK STREET
(PUBLIC 60.0' WIDE)

SOUTH CANAL

1849 COUNTY LAYOUT

1909 CITY LAYOUT

PROJECT BEGIN
STA 0+70.00
N3080245.3219
E746615.1764

PROP 3-2" FRE CONDUIT OVER THE BRIDGE (ITEM 801.72)

PROP TEMP EASEMENT

PROP TREE TRIMMING

PROP PB (TYP)

PROP ORNAMENTAL LP (ITEM 812.992) (TYP)

PROP PERM EASEMENT

PROP TEMP EASEMENT

PROP 2" PVC CONDUIT (TYP)

PROP CITY 2-4" PVC CONDUIT

ADJ (BO) AT&T MH

ABAN 4" STEEL FIBER–CITY OF LAWRENCE

ADJ CITY OF LAWRENCE HANDHOLE

PROP JUNCTION BOX (TYP), SEE LIGHTING PLANS

PROP RRFB LOCATION NO. 1 (TYP)

PROP TEMP EASEMENT

RET LP

RET UPL

30' RIGHT OF WAY

R&D 2" MCI CONDUIT (BO)

PROP HIGHWAY LIGHTING LOAD CENTER NO. 1

PROP UP (ITEM 813.801); PROP 2" ELECTRICAL CONDUIT TYPE NM - PLASTIC UL (ITEM 804.2); PROP OVERHEAD SERVICE CONNECTION LOC. 1 (ITEM 813.801)

RET UPL

PROP TEMP EASEMENT

ACCESS AND UTILITY EASEMENT FOR THE BENEFIT OF ESSEX COMPANY BK/PG 4099/213

RET UPL

RET UPL 13

RET UPL 13-1

RET UPL

10' STEAMLINE EASEMENT BK/PG 1581/11

APPROX LOG (TYP)

PROP AT&T 2-4" PVC CONDUIT

PROP CMH (ITEM 811.13); PROP F&C (BO-COMAST)

PROP COMCAST 2-4" PVC CONDUIT

ABAN 6" CIP FIBER–COMCAST

R&D 2–6" FRE FIBER–AT&T

PROP 6 - 4" FRE CONDUIT

PROP TEMP EASEMENT

APPROX. LOCATION 96" CLASS III RCP SEWER ENCASED IN CONC.–GREATER LAWRENCE SANITARY DISTRICT BANK B3 SERIES

BANK B2 SERIES

BANK B3 SERIES

RR VAL MAP SEC. 7.4–1

BRIDGE OUTLINE

EXISTING RAILROAD

CONST B

CONC STRUCTURE

4" HDPE FIBER–VZ/MCI

8" WATER

12" WATER

2"PL GAS–EVERSOURCE

WOOD FENCE

WOOD POST GUARDRAIL

ELEC

UGE

UGT

GUY

UPL

SWC

CB1

SMH1

#B1.100

#B1.101

#B1.102

#B1.103

#B1.104

#B1.105

0+50

1

2

3

4

5

CONTINUED ON SHEET NO. 67

NOTES:

1. CONTRACTOR SHALL FURNISH AND INSTALL ALL ELECTRICAL CONDUIT ON AND OFF THE BRIDGE FOR THE RELOCATION OF THE AT&T, COMCAST, AND CITY OWNED COMMUNICATIONS USING CONTRACT ITEMS. THE CONTENTS OF THE EXISTING CONDUIT SHALL BE RELOCATED BY AT&T, COMCAST, AND THE CITY OF LAWRENCE. CONTRACTOR SHALL COORDINATE WITH CITY OF LAWRENCE AS REQUIRED TO DETERMINE LIMITS OF RELOCATION.

2. SEE LIGHTING PLANS (SHEET 81 - 95) FOR PROPOSED LIGHTING INFORMATION.

0 20 50 100

SCALE: 1" = 20'

LAWRENCE
LMRC RAIL TRAIL

STATE	FED. AID PROJ. NO.	SHEET NO.	TOTAL SHEETS
MA	CMQ-003S(733)X	67	245
	PROJECT FILE NO. 608930		

UTILITY PLANS - 2 OF 16

608930_H08A(UTILITY PLANS).DWG Plotted on 7-Sep-2024 12:01 PM

N

SOUTH BROADWAY (ROUTE 28)
(PUBLIC 66.0' WIDE)

MERRIMACK RIVER

1849 COUNTY LAYOUT

PROP TEMP EASEMENT

PROP 2-2" PVC CONDUIT (TYP)

PROP ORNAMENTAL LP (ITEM 812.993) (TYP)

PROP PERM EASEMENT

PROP BRIDGE SCUPPER (TYP); SEE BRIDGE PLANS

CONTINUED ON SHEET NO. 67

BRIDGE OUTLINE

RR VAL MAP SEC. 7.4–1

EXISTING RAILROAD

CONST ℄

N/F
MASSACHUSETTS BAY TRANSPORTATION AUTHORITY
BK/PG 1299/162
MERRIMACK STREET
122–19

10' STEAMLINE EASEMENT BK/PG 1581/11

APPROX LOG (TYP)

BANK B4 SERIES

LPL #6818

CONTINUED ON SHEET NO. 68

R&D (ITEM 114.11)
6" OVER 24"
STEEL STEAM (ABAN)

R&D
2" STEEL
FIBER–MCI

R&D
4" STEEL FIBER–CITY
OF LAWRENCE

R&D
2–6" FRE FIBER–AT&T

R&D
6" CIP FIBER–COMCAST

PROP 6 - 4" FRE CONDUIT

APPROX. LOCATION 96" CONC. GREATER LAWRENCE III RCP IN CONC. GREATER LAWRENCE SANITARY DISTRICT SEWER ENCASED BANK B3 SERIES

PROP TEMP EASEMENT

GREATER LAWRENCE SANITARY DISTRICT SEWER EASEMENT BK/PG 1219/203

N/F
ESSEX COMPANY
BK/PG –/–
PARKER STREET
103–3

PROP JUNCTION BOX (TYP), SEE LIGHTING PLANS

PROP TEMP EASEMENT

PROP PERM EASEMENT

R&S MCI HANDHOLE

PROP TEMP EASEMENT

RET UPL 8815 & GUY

RET UPL 8815-1 & GUY

PROP TEMP EASEMENT

N/F
ESSEX COMPANY
BK/PG –/–
ESSEX ST
124–1

GREATER LAWRENCE SANITARY DISTRICT SEWER EASEMENT BK/PG 1219/303

N/F
MASSACHUSETTS ELECTRIC COMPANY
BK/PG 1011/438
BROADWAY
143–23

2–6"ø FRE CONDUIT (AT&T)
REM. ABANDONED 2"ø STEEL CONDUIT (MCI)
4"ø STEEL CONDUIT (CITY OF LAWRENCE)
6"ø CIP CONDUIT (COMCAST)
REM. ABANDONED EXIST. STEAM LINE AND CONDENSATE RETURN LINE
S7 S8 S9

STAGE 1

PROP. 2–4"ø FRE CONDUIT (CITY OF LAWRENCE)
PROP. 2–4"ø FRE CONDUIT (AT&T)
PROP. 2–4"ø FRE CONDUIT (COMCAST)
S7 S8 S9

STAGE 2

REM. EXIST. DECK TIMBERS AND EXIST. UTILITIES
S7 S8 S9

STAGE 3

UTILITY RELOCATION DETAILS

SCALE: 3/8" = 1'–0"

0 20 50 100
SCALE: 1" = 20'

LAWRENCE
LMRC RAIL TRAIL

STATE	FED. AID PROJ. NO.	SHEET NO.	TOTAL SHEETS
MA	CMQ-003S(733)X	68	245
PROJECT FILE NO.	608930		

UTILITY PLANS - 3 OF 16

608930_HDRA\UTILITY PLANS\.DWG Plotted on 7-Sep-2024 12:02 PM

PROPOSED DRAINAGE STRUCTURE DATA						
NO.	TYPE	STATION	RIM ELEV.	INV. ELEV. IN	INV. ELEV. OUT	REMARKS
1	PROP CB	25+13, 48' LT	51.67	-	46.36 (EX)	OFFSET TOP DEEP SUMP HOODED CB, REM EXIST CB
2	PROP CB	25+29, 13' LT	51.53	-	47.53	DEEP SUMP HOODED CB
3	PROP DMH	25+16, 4' LT	51.38	46.20 (EX) 47.00 (2) 44.20 (4)	44.00 (EX)	

EXISTING INVERT TABLE

CB2
RIM=51.60'
SUMP=47.3

CB3
RIM=52.16'
SUMP=47.56

CB4
RIM=51.64'
SUMP=47.04

CB5
RIM=51.95'

CB6
RIM=51.56'
INV.(a)=46.36
SUMP=43.56

CB7
RIM=51.48'
SUMP=48.64

CB8
RIM=51.47'
SUMP=48.07

CB9
RIM=51.30'
INV.(a)=48.15
SUMP=48.15

CB10
RIM=50.31'
INV.(a)=47.51
SUMP=44.51

DMH1
RIM=51.38'
INV.(a)=47.84
INV.(b)=44.00
INV.(c)=46.20

DMH2
RIM=51.37'
INV.(a)=47.6
SUMP.=36.93

CONTINUED ON SHEET NO. 67

CONTINUED ON SHEET NO. 69

BROADWAY - ROUTE 28

WATER STREET (PUBLIC - 50' WIDE)

NORTH CANAL

CANAL STREET (PUBLIC - 50' WIDE)

1849 COUNTY LAYOUT

1874 CITY LAYOUT

1898 COUNTY LAYOUT

1935 COUNTY LAYOUT

N/F
MASSACHUSETTS BAY TRANSPORTATION AUTHORITY
BK/PG 1299/162
BROADWAY
144–29

N/F
ESSEX COMPANY
BK/PG –/–
ESSEX ST
143–21

N/F
SLEIMAN A. RAMY
BK/PG 7532/159
1 WATER STREET
PL 4296
144–3

N/F
HODEN FAMILY REALTY, LLC
BK/PG 16201/145
3–5 WATER ST
144–2

N/F
ESSEX COMPANY
BK/PG –/–
ESSEX ST
124–1

N/F
MERRIMACK FALLS LLC
BK/PG 12492/11
BROADWAY
PL 7841, PL 8527
143–22

N/F
MASSACHUSETTS ELECTRIC COMPANY
BK/PG 1011/438
BROADWAY
143–23

N/F
NUNEZ LLC
BK/PG 16673/321
468 CANAL STREET
144–28

N/F
ESSEX COMPANY
BK/PG –/–
WATER ST
144–27–1

N/F
6–12 HAMPSHIRE STREET, LLC
BK/PG 13424/72
606 CANAL STREET
144–27–2

N/F
BROADWAYCANAL–1 LLC
BK/PG 16328/128
3 BROADWAY
144–24

PROP PB (TYP)
PROP LP (TYP)
PROP HH (ITEM 811.23)
PROP PERM EASEMENT
ADJ EHH (BO-AT&T)
PROP 2" ELECTRICAL CONDUIT (TYP)
RET HYD
RET
RET UPL 8815 & GUY
RET UPL 8815-1 & GUY
R&D 2–6" FRE FIBER–AT&T
R&D 6" CIP FIBER–COMCAST
REM (BO-VZ) MCI HANDHOLE
PROP CMH (ITEM 811.13); PROP F&C (BO-COMAST)
PROP TEMP EASEMENT
RET UPL
10' STEAMLINE EASEMENT BK/PG 1581/11
PROP TEMP EASEMENT
PROP PERM EASEMENT
PROP TEMP EASEMENT
4" STEEL FIBER–CITY OF LAWRENCE RET
PROP 2-4" PVC CONDUIT (ITEM 804.4)
R&D UT CAB (ITEM 819.9)
RELOC UPL 881-84 (BO-MECO/NG); PROP COBRA HEAD (BO-MECO/NG) PROP RISER (BO-MECO-NG)
RET CB
R&S LPL 6322 (ITEM 823.71)
PROP PERM EASEMENT
PROP TEMP EASEMENT
APPROX LOG (TYP)
40' PASSAGEWAY FOR ABUTTERS PLAN 8527
PROP PERM EASEMENT
RET WG
PROP TEMP EASEMENT
RET EHH
PROP PERM EASEMENT
PROP TEMP EASEMENT
RET 4" STEEL FIBER–CITY OF LAWRENCE
RET 6" OVER 24" STEEL STEAM
RET UPL 8817
PROP PERM EASEMENT
PROP TEMP EASEMENT
1–1/4" HDPE FIBER–VZ(MCI)
RET
RR VAL MAP SEC. 7.4–1
ADJ PB
10' STEAMLINE EASEMENT BK/PG 1581/11
RET ULT 20
R&S EHH
RET MAST ARM
PROP SAWCUT (TYP)
CONST 8
ADJ TMH (BO-VZ)
24+51.00 LAWRENCE RAIL TRAIL B BL = 15+11.53 LAWRENCE RAIL TRAIL A BL
PROP TEMP EASEMENT
RET HYD
PROP PERM EASEMENT
15+45.76 LAWRENCE RAIL TRAIL A BL = 110+78.52 CANAL STREET WATER STREET BL
PROP PERM EASEMENT
RET WG
PROP TEMP EASEMENT
R&D MAST ARM (TYP)
RET UPL
PROP TEMP EASEMENT
RET UPL 8818
R&S EHH
LIMIT OF WORK
ADJ CB
PROP 12'- 12" RCP
REM CB
R&S TS CAB
ADJ EHH
PROP TS CAB
ADJ GG (BO-EVERSOURCE)
PROP 132' - 12" RCP CLASS IV
PROP PERM EASEMENT
PROP TEMP EASEMENT
ADJ EHH (BO-MCI)
RELOC UP (ITEM 813.802); PROP EHH; RELOC ELEC SERVICE RISER LOC. NO. 1
PROP TEMP EASEMENT
ABAN EHH
PROP LIGHTING LOAD CENTER NO. 2
RET LP
PROP PERM EASEMENT
RET ULT 1219; PROP SERVICE CONNECT TO EXIST RISER
R&D CPP
R&S EHH
ADJ EMH (BO)
ADJ DMH
ADJ WG
LIMIT OF WORK
24+51
ADJ PB
16+00
RET LP
PROP TEMP EASEMENT
PROP PB (TYP)
ADJ CB; PROP F&G
R&S EHH
24+98.80 LAWRENCE RAIL TRAIL B BL = 111+15.88 CANAL STREET WATER STREET BL
RET TMH
ABAN PB
ABAN EXIST TRAFFIC SIGNAL CONDUIT (TYP)
PROP MAST ARM (TYP)
PROP TEMP EASEMENT
ADJ GG (BO)
RET TRENCH DRAIN
110+00
112+25
112

0 20 50 100

SCALE: 1" = 20'

LAWRENCE
LMRC RAIL TRAIL

STATE	FED. AID PROJ. NO.	SHEET NO.	TOTAL SHEETS
MA	CMQ-003S(733)X	69	245
	PROJECT FILE NO. 608930		

UTILITY PLANS - 4 OF 16

608930_HDBA(UTILITY PLANS).DWG Plotted on 7-Sep-2024 12:03 PM

PROPOSED DRAINAGE STRUCTURE DATA						
NO.	TYPE	STATION	RIM ELEV.	INV. ELEV. IN	INV. ELEV. OUT	REMARKS
(4)	PROP DMH	26+52, 8' LT	52.53	46.55	45.52	
(5)	PROP OCS	29+39, 20' LT	(a) 51.60	(b) 50.40 48.50	49.50	(a) 48"x48" GRADE (b) 4" DIA ORIFICE

N

PROP TEMP EASEMENT
PROP TEMP EASEMENT
PROP TEMP EASEMENT
PROP TEMP EASEMENT
PROP PERM EASEMENT
RET UPL 8819
PROP PB (TYP)
PROP ORNAMENTAL LP (ITEM 812.992) (TYP)
PROP 2" PVC CONDUIT (TYP)
PROP 284' - 12' RCP CLASS IV
PROP 171' - 6" PERFORATED HDPE INV ELEV = 48.5'
RET UPL 8820; REM GUY WIRES (BO); PROP 20' GUY WIRE (BO)
RET UPL 8821
PROP 132' - 12' RCP
PROP TEMP EASEMENT
PROP TEMP EASEMENT
APPROX LOG (TYP)
CONST ℄
49.50
50.50
51.50

N/F
MASSACHUSETTS BAY TRANSPORTATION AUTHORITY
BK/PG 1299/162
CANAL STREET
144–4

N/F
FACELLA REALTY & INVESTMENT CO., INC.
BK/PG 929/394
600A ESSEX ST
PL 4146
144–15

N/F
BERNARDO PENA
BK/PG 6873/44
10 BROADWAY
PL 3415
144–5

N/F
MASSACHUSETTS BAY TRANSPORTATION AUTHORITY
BK/PG 1299/162
CANAL STREET
144–4

N/F
GREGORY REALTY TRUST
BK/PG 6479/193
14 BROADWAY
PL 1919
144–6

N/F
18–20 BROADWAY, LLC
BK/PG 10906/92
20 BROADWAY
144–8

N/F
CRISTIAN RIVAS
BK/PG 14751/181
598 ESSEX ST
144–13

N/F
BROADWAYCANAL–1 LLC
BK/PG 16328/128
3 BROADWAY
144–24

N/F
18–20 BROADWAY, LLC
BK/PG 10927/25
20 BROADWAY
144–9

RR VAL MAP SEC. 7.4–1
10' STEAMLINE EASEMENT BK/PG 1581/41
10' STEAMLINE EASEMENT BK/PG 1581/11
1–1/4"HDPE FIBER–VZ(MCI)
EXISTING RAILROAD
1898 COUNTY LAYOUT
BROADWAY - ROUTE 28 (PUBLIC)
EOP
CLF
GUY
UPL 8820
UPL 8821

CONTINUED ON SHEET NO. 68

CONTINUED ON SHEET NO. 70

0 20 50 100
SCALE: 1" = 20'

LAWRENCE
LMRC RAIL TRAIL

STATE	FED. AID PROJ. NO.	SHEET NO.	TOTAL SHEETS
MA	CMQ-003S(733)X	70	245
PROJECT FILE NO.	608930		

UTILITY PLANS - 5 OF 16

608930_HDBA(UTILITY PLANS).DWG Plotted on 7-Sep-2024 12:03 PM

N

ESSEX STREET (PUBLIC - 60.0' WIDE)

1856 CITY LAYOUT

30' COMMON RIGHT OF WAY

EXISTING INVERT TABLE

CB11
RIM=51.43'
SUMP=49.34

CB12
RIM=51.62'
SUMP=45.12

N/F
GANGI REALTY CORPORATION
BK/PG 951/121
623 ESSEX ST
165-36-A

N/F
GANGI REALTY CORPORATION
BK/PG 1617/157
621 ESSEX ST
165-36-B

N/F
GANGI REALTY CORPORATION
BK/PG -/-
19 WINTER STREET
PL 5746
165-33

N/F
FACELLA REALTY & INVESTMENT
BK/PG 39/557
600 ESSEX ST
144-16

N/F
CRISTIAN RIVAS
BK/PG 14751/181
598 ESSEX ST
144-13

N/F
MASSACHUSETTS BAY TRANSPORTATION AUTHORITY
BK/PG 1299/162
LOWELL STREET
166-65

N/F
MCDONALD'S CORPORATION
BK/PG 3122/53
50 BROADWAY
145-1

N/F
CROW FLOOR & WALL COVERING CO.
BK/PG 1112/450
619 ESSEX STREET
165-37

N/F
JOAQUIN ROSA
BK/PG 9397/270
621 COMMON ST
PL 4211
166-45

N/F
FULTON STREET CORPORATION
BK/PG 3936/289
REAR 92-98 BROADWAY
PL 4226
166-51

N/F
AJ WOLF REALTY, LLC
BK/PG 5711/309
613 COMMON STREET
PL 5746
166-47

N/F
CITY OF LAWRENCE
BK/PG -/-
617 COMMON STREET
PL 5746
166-46

COMMON STREET (PUBLIC - 60.0' WIDE)

14' COMMON PASSAGEWAY

1932 CITY LAYOUT

CITY LAYOUT

LIMIT OF WORK

90+00

91+00

92+00

93+00

32+89.30 LAWRENCE RAIL TRAIL B BL =
91+36.49 ESSEX STREET BL

CONST ℄

ADJ GG (BO-EVERSOURCE)
RET CB
ADJ EMH (BO)
RET UPL 1455
ADJ EHH (BO-MCI)
RET BOLLARD
ADJ EHH (BO)
PROP TEMP EASEMENT
RET UPL
PROP PERM EASEMENT
ADJ OMH (BO)
PROP TEMP EASEMENT
PROP 2" PVC CONDUIT (TYP)
PROP ORNAMENTAL LP (ITEM 812.992) (TYP)
RET UPL 917 & GUY
15' ACCESS EASEMENT PLAN# 10150
PROP TEMP EASEMENT
REM EXIST ABAN STEAM LINE; REPLACE WITH FILL AS REQUIRED
10' STEAMLINE EASEMENT BK/PG 1581/11
ADJ EHH (BO)
ADJ EHH (BO-AT&T)
PROP PB (TYP)
CONST ℄
RET UPL
PROP RRFB LOCATION NO. 2 (TYP)
ADJ EHH (BO)
RET UPL 8822
PROP TEMP EASEMENT
PROP TEMP EASEMENT
ADJ EMH (BO)
RET UPL 1454 & GUY
ADJ WSO
PROP SAWCUT (TYP)
ADJ TMH (BO-AT&T)
PROP TEMP EASEMENT
RET LPL
RET UPL 8823
RET UPL 8824
APPROX LOG (TYP)
PROP SEDIMENT FOREBAY OUTLET; SEE DETAIL ON SHEET 125
PROP DRAINAGE SWALE
PROP PERM EASEMENT

RR VAL MAP SEC. 7.4-1

CONTINUED ON SHEET NO. 69

CONTINUED ON SHEET NO. 71

0 20 50 100
SCALE: 1" = 20'

LAWRENCE
LMRC RAIL TRAIL

STATE	FED. AID PROJ. NO.	SHEET NO.	TOTAL SHEETS
MA	CMQ-003S(733)X	71	245
PROJECT FILE NO.	608930		

UTILITY PLANS - 6 OF 16

608930_HDR\(UTILITY PLANS).DWG Plotted on 7-Sep-2024 12:04 PM

CONTINUED ON SHEET NO. 70

CONTINUED ON SHEET NO. 72

N

WINTER STREET
(PUBLIC)

1877 CITY LAYOUT

LIMIT OF RESOURCE AREA AS FLAGGED BY NOVER ARMSTRONG ON MARCH 10, 2017. (TYP.) (REVISED PER CONCOM DETERMINATION BASED UPON MAY 19, 2017 SITE WALK)

N/F
MERRIMACK STREET LLC
BK/PG 15698/44
33–37 WINTER STREET
166–69

N/F
GANGI REALTY CORPORATION
BK/PG –/–
19 WINTER STREET
PL 5746
165–33

N/F
THE 620 ESSEX STREET LLC
BK/PG 14245/39
27 WINTER STREET
PL 15028
166–70

14' COMMON PASSAGEWAY
BK/PG 1577/189

N/F
WILLIAM J. MATTHES, JR.
1881/213
292 LOWELL ST
166–66

1853 CITY LAYOUT

LOWELL STREET
(ABOVE)
(PUBLIC - 50.0' WIDE)

CONST ℄

509

N/F
436 SOUTH UNION REALTY TRUST
BK/PG 16629/144
291 LOWELL ST
PL 1011
166–29

N/F
ZACHARY MACARO
BK/PG 11843/318
285 LOWELL ST
PL 1011
166–30

PROP PB (TYP)

REM EXIST ABAN STEAM LINE; REPLACE WITH FILL AS REQUIRED

PROP TEMP EASEMENT

10' STEAMLINE EASEMENT BK/PG 1581/11

PROP TEMP EASEMENT

PROP 2" PVC CONDUIT (TYP)

41+15.40 LAWRENCE RAIL TRAIL B BL = 510+49.07 LOWELL STREET BL

RET GPL

R&R CONDUIT (BO-AT&T); PROP CLASS A TRENCH

MASSDOT BRIDGE EASEMENT BK/PG 1280/493

PROP 2" PVC CONDUIT (TYP)

RR VAL MAP SEC. 7.4–1

10' STEAMLINE EASEMENT BK/PG 1581/11

PROP DRAINAGE SWALE

RET CB

ADJ EHH (BO-MCI)

RET UPL 8826

510

RETAINING WALL (BRIDGE PIER)

BRIDGE OUTLINE

37 38 39 40 41 42

CONST ℄

50.75 49.75 50.75 50.25 50.75

EXISTING RAILROAD

1–1/4"HDPE FIBER–VZ(MCI)

STEEL FIBER–AT&T

STEAM LINE (ABAN)

PROP SEDIMENT FOREBAY OUTLET; SEE DETAIL ON SHEET 125

APPROX LOG (TYP)

RET UPL 8825

PROP CHECK DAM (TYP); SEE DETAIL SHEET 125

PROP PERM EASEMENT

MASSDOT BRIDGE EASEMENT BK/PG 1280/493

PROP ORNAMENTAL LP (ITEM 812.992) (TYP)

FOR LOWELL STREET GRADING, SEE SHEET 45

PROP PERM EASEMENT

ENCROACHMENT EASEMENT BK/PG 3036/317

3' MAINTAINENCE EASEMENT BK/PG 3036/317

N/F
FULTON STREET CORPORATION
BK/PG 3936/289
REAR 92–98 BROADWAY
PL 4226
166–51

N/F
CITY OF LAWRENCE
BK/PG –/–
617 COMMON STREET
PL 5746
166–46

14' COMMON PASSAGEWAY

N/F
MASSACHUSETTS BAY TRANSPORTATION AUTHORITY
BK/PG 1299/162
LOWELL STREET
166–65

N/F
FULTON STREET CORPORATION
BK/PG 3936/289
REAR 617 COMMON STREET
166–58

N/F
DAVID A. BIDER & SYLVIA M. BIDER
BK/PG 3161/316
278 LOWELL ST
PL 7005
166–64

N/F
DAVID A. BIDER & SYLVIA M. BIDER
BK/PG 3161/316
274–276 LOWELL ST
166–63

N/F
THE 290 LOWELL STREET REALTY TRUST
BK/PG 4694/65
270–272 LOWELL ST
166–62

512

511

N/F
283 LOWELL STREET LAWRENCE, LLC
BK/PG 12763/126
283 LOWELL ST
166–31

0 20 50 100

SCALE: 1" = 20'

LAWRENCE
LMRC RAIL TRAIL

STATE	FED. AID PROJ. NO.	SHEET NO.	TOTAL SHEETS
MA	CMQ-003S(733)X	72	245
	PROJECT FILE NO. 608930		

UTILITY PLANS - 7 OF 16

608930_HDR(UTILITY PLANS).DWG Plotted on 7-Sep-2024 12:04 PM

N

N/F
436 SOUTH UNION
REALTY TRUST
BK/PG 16629/144
291 LOWELL ST
PL 1011
166–29

N/F
HECTOR B. CHECO
BK/PG 16108/310
17 MORTON ST
166–21

N/F
GLADYS A. GORDON
BK/PG 15802/220
21 MORTON ST
166–20

N/F
MASSACHUSETTS BAY
TRANSPORTATION AUTHORITY
BK/PG 1299/162
HAVERHILL STREET
167–2

N/F
DAKE, LLC
BK/PG 9501/326
27–31 MORTON ST
PL 4418
166–19

11' PASSAGEWAY

N/F
LAWRENCE HOUSING
AUTHORITY
BK/PG –/–
33–47 MORTON ST
166–18

MASSDOT
BRIDGE EASEMENT
BK/PG 1280/493

PROP TREE TRIMMING

RR VAL MAP SEC. 7.4–1

RR VAL MAP SEC. 7.4–2

10' STEAMLINE EASEMENT
BK/PG 1581/11

RET UPL 8827

RET UPL 8828

RET UPL 8829

1-1/4"HDPE FIBER-VZ(MCI)

EXISTING RAILROAD

43 44 45 46 47 48

CONST ℄

IVW

CLF

APPROX LOG (TYP)

PROP PERM
EASEMENT

PROP 2" PVC
CONDUIT (TYP)

LIMIT OF RESOURCE AREA AS
FLAGGED BY NOVER ARMSTRONG
ON MARCH 10, 2017. (TYP.)
(REVISED PER CONCOM
DETERMINATION BASED UPON
MAY 19, 2017 SITE WALK)

PROP ORNAMENTAL LP
(ITEM 812.992) (TYP)

PROP PB (TYP)

ENCROACHMENT
EASEMENT
BK/PG 3036/317

3' MAINTAINENCE
EASEMENT
BK/PG 3036/317

N/F
283 LOWELL STREET LAWRENCE, LLC
BK/PG 12763/126
283 LOWELL ST
166–31

CLYDE LANE
(PRIVATE)

OLIVER PLACE (PRIVATE)

OLIVER PLACE (PRIVATE)

N/F
MONICAH M. MARSH
BK/PG 14131/253
10–14 BRADFORD PLACE
166–40

N/F
CITY OF LAWRENCE
BK/PG 10095/356
8 BRADFORD PLACE
166–41

N/F
5–9 MILL STREET, LLC
BK/PG 15947/238
135 BRADFORD
167–1

CONTINUED ON SHEET NO. 71

CONTINUED ON SHEET NO. 73

0 20 50 100

SCALE: 1" = 20'

LAWRENCE
LMRC RAIL TRAIL

STATE	FED. AID PROJ. NO.	SHEET NO.	TOTAL SHEETS
MA	CMQ-003S(733)X	73	245
PROJECT FILE NO.	608930		

UTILITY PLANS - 8 OF 16

PROPOSED DRAINAGE STRUCTURE DATA						
NO.	TYPE	STATION	RIM ELEV.	INV. ELEV. IN	INV. ELEV. OUT	REMARKS
(8)	PROP CB	100+87, 17' LT	57.92	-	MATCH EXIST*	OFFSET TOP

NOTE: THERE IS NO PROPOSED STRUCTURE NO. 6 OR NO. 7

*CONTRACTOR SHALL TEST PIT PRIOR TO CONSTRUCTION TO CONFIRM EXISTING DRAINAGE PIPE

EXISTING INVERT TABLE

CB13
RIM=57.88
INV. A=55.00 (8" PVC)
INV. B=55.37 (8" PVC)

CB14
RIM=58.09
INV. A=55.41 (8" PVC)

CB15
RIM=61.42'
INV.(o)=59.17
SUMP=59.17

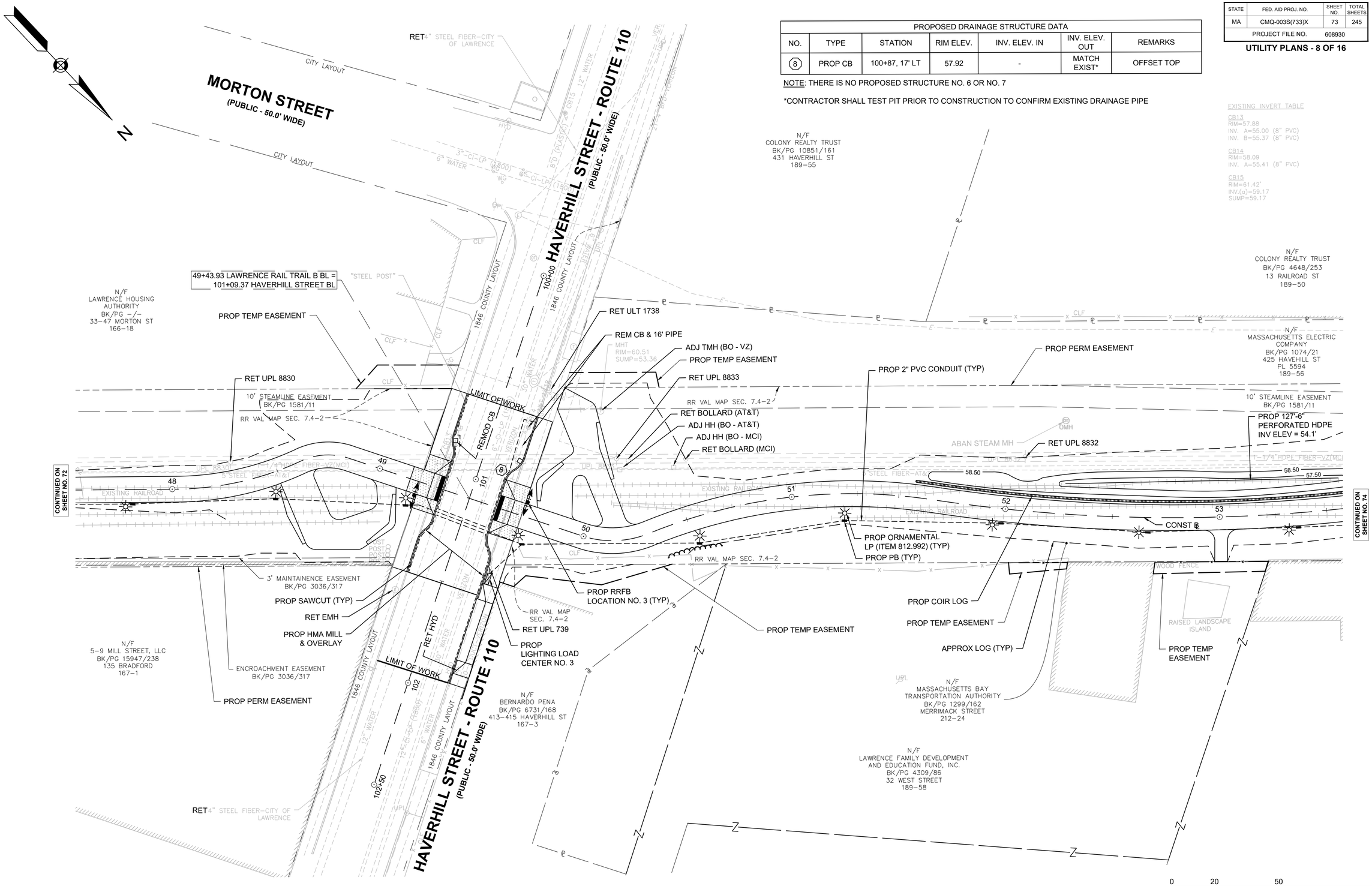

608930_HDBA(UTILITY PLANS).DWG Plotted on 7-Sep-2024 12:05 PM

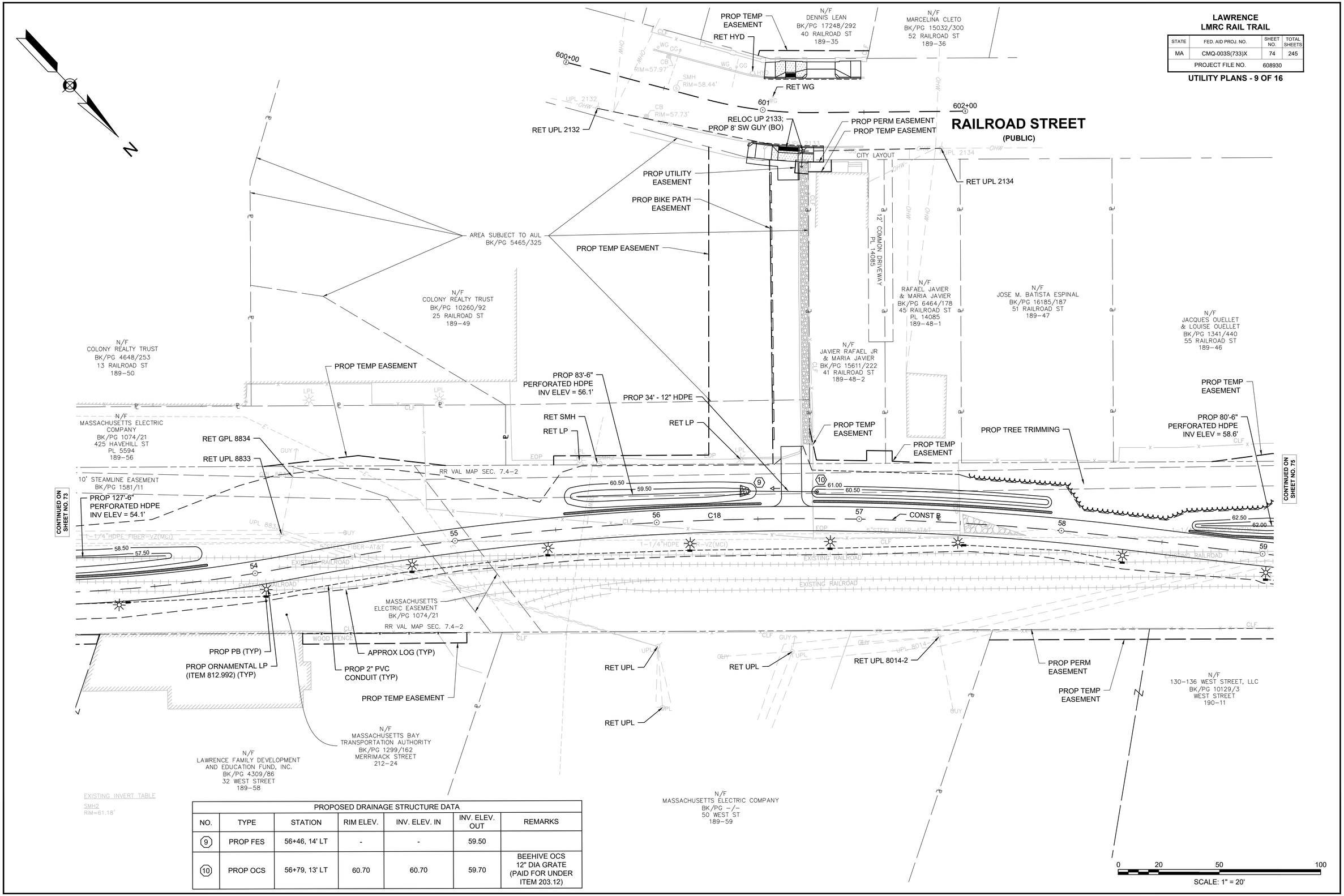

PROPOSED DRAINAGE STRUCTURE DATA						
NO.	TYPE	STATION	RIM ELEV.	INV. ELEV. IN	INV. ELEV. OUT	REMARKS
9	PROP FES	56+46, 14' LT	-	-	59.50	
10	PROP OCS	56+79, 13' LT	60.70	60.70	59.70	BEEHIVE OCS 12" DIA GRATE (PAID FOR UNDER ITEM 203.12)

608930_HD8A(UTILITY PLANS).DWG Plotted on 7-Sep-2024 12:06 PM

LAWRENCE
LMRC RAIL TRAIL

STATE	FED. AID PROJ. NO.	SHEET NO.	TOTAL SHEETS
MA	CMQ-003S(733)X	75	245
	PROJECT FILE NO.	608930	

UTILITY PLANS - 10 OF 16

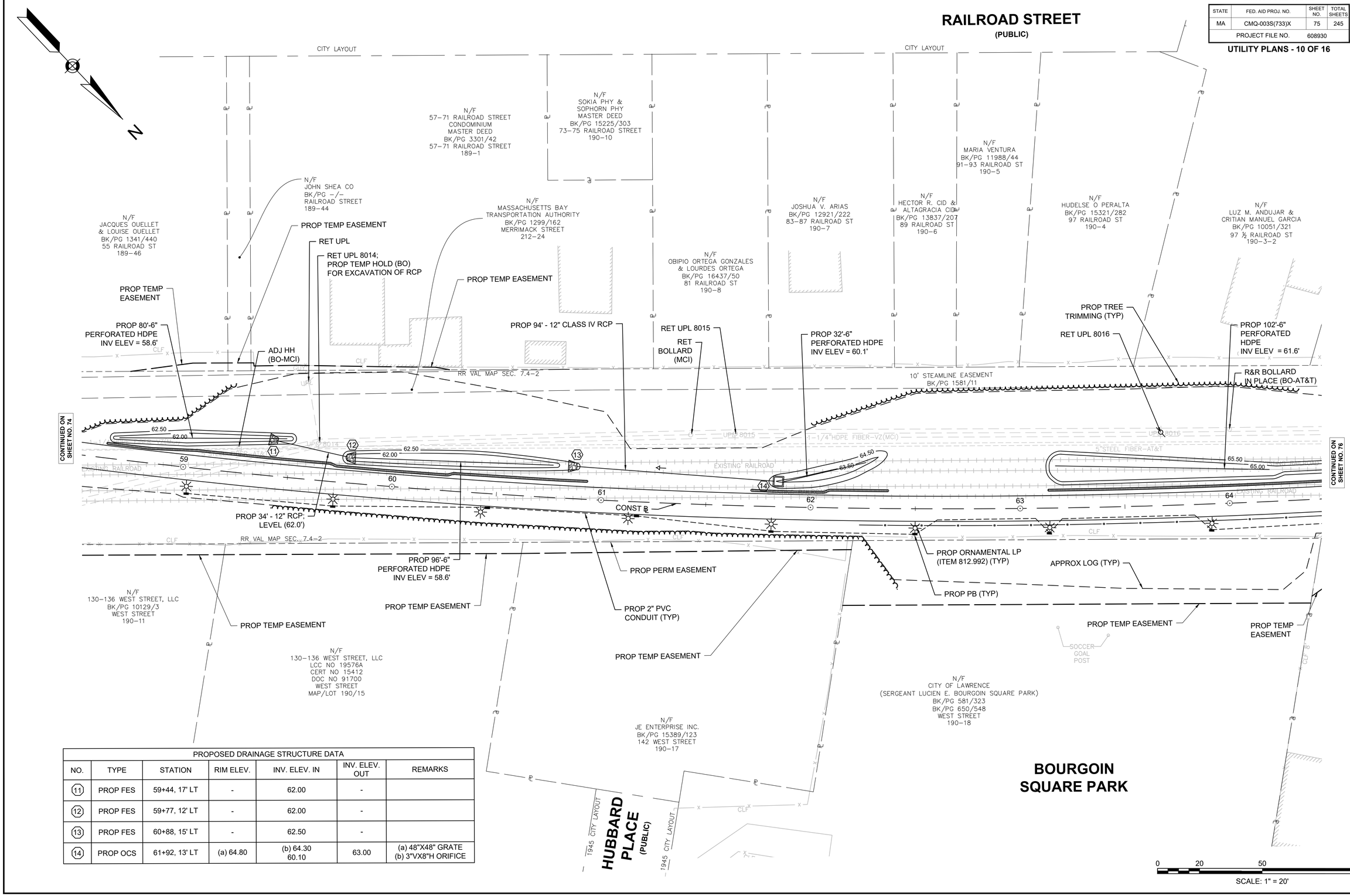

PROPOSED DRAINAGE STRUCTURE DATA						
NO.	TYPE	STATION	RIM ELEV.	INV. ELEV. IN	INV. ELEV. OUT	REMARKS
11	PROP FES	59+44, 17' LT	-	62.00	-	
12	PROP FES	59+77, 12' LT	-	62.00	-	
13	PROP FES	60+88, 15' LT	-	62.50	-	
14	PROP OCS	61+92, 13' LT	(a) 64.80	(b) 64.30 60.10	63.00	(a) 48"X48" GRATE (b) 3"VX8"H ORIFICE

608930_HD8A(UTILITY PLANS).DWG Plotted on 7-Sep-2024 12:06 PM

LAWRENCE
LMRC RAIL TRAIL

STATE	FED. AID PROJ. NO.	SHEET NO.	TOTAL SHEETS
MA	CMQ-003S(733)X	76	245
PROJECT FILE NO.	608930		

UTILITY PLANS - 11 OF 16

608930_HDBA(UTILITY PLANS).DWG Plotted on 7-Sep-2024 12:07 PM

N

N/F
LUZ M. ANDUJAR &
CRITIAN MANUEL GARCIA
BK/PG 10051/321
97 ½ RAILROAD ST
190-3-2

N/F
SOLANGE ACEVEDO
BK/PG 7575/167
103 MAY ST
211-14

N/F
LORENZO RODRIQUEZ
BK/PG 5918/26
109 MAY ST
211-13

DRIVEWAY EASEMENT
FOR THE BENEFIT OF
#103 MAY STREET
BK/PG 1740/244

N/F
111 MAY STREET TRUST
BK/PG 4482/130
119 MAY ST
211-10

N/F
GILBERTO MOSQUEA &
ARSENIA TORRES MANON
BK/PG 15178/187
123 MAY ST
211-9

N/F
GILCITA MARTINEZ
BK/PG 11269/46
125 MAY ST
211-8

N/F
OLGA CRUZ
BK/PG 17319/10
127 MAY ST
211-7

N/F
VICTOR HERNANDEZ
BK/PG 9665/119
131-133 MAY ST
211-6

N/F
AA REAL ESTATE
GROUP LLC
BK/PG 17290/6
139-143 MAY ST
211-4

N/F
JUANA E. VASQUEZ
BK/PG 11983/179
135-137 MAY ST
211-5

1855 CITY LAYOUT

MAY STREET
(PUBLIC)

PROP 102'-6"
PERFORATED
HDPE
INV ELEV = 61.6'

R&R BOLLARD
IN PLACE (BO-AT&T)

POINT OF TRANSITION
TO SWALE FOLLOWING
PATH SLOPE

PROP TREE
TRIMMING (TYP)

10' STEAMLINE EASEMENT
BK/PG 1581/11

RET UPL 8017

PROP DRAINAGE SWALE

PROP TEMP
EASEMENT

RET UPL 8018

PROP TEMP
EASEMENT

10' STEAMLINE
EASEMENT BK/PG
1581/11

PROP TEMP
EASEMENT

PROP TEMP
EASEMENT

RR VAL MAP SEC. 7.4-2

CLF

RET UPL 8019

UPL 8017

UPL 8018

UPL 8019

1-1/4"HDPE FIBER-VZ(MCI)

5"STEEL FIBER-AT&T

EXISTING RAILROAD

65.50

65.00

64

65

66

67

68

69

CONST ℄

CLF WITH BARBED WIRE

DOWN

RR VAL MAP SEC. 7.4-2

PROP 2" PVC
CONDUIT (TYP)

APPROX LOG (TYP)

PROP ORNAMENTAL LP (ITEM 812.992) (TYP)

PROP PB (TYP)

CONC. PIERS

SLOPE OF SWALE TO
MATCH MAIN PATH
SLOPING (0.75%) FROM
TRANSITION TO START
OF SWALE STA 66+21

PROP TEMP
EASEMENT

PROP PERM
EASEMENT

PROP TEMP EASEMENT

N/F
MASSACHUSETTS BAY
TRANSPORTATION AUTHORITY
BK/PG 1299/162
MERRIMACK STREET
212-24

N/F
ARCHER AUTO CO., INC.
BK/PG 1728/288
30-34 ARCHER ST
PL 15983
190-37

N/F
EIGHT BLAKELIN, LLC
BK/PG 11407/199
8 BLAKELIN ST
211-17

N/F
DISMANTLING, LLC
BK/PG 15225/52
26 WENDELL STREET
190-26

WENDELL STREET
(PUBLIC)

1886 CITY LAYOUT

1886 CITY LAYOUT

ARCHER STREET
(PUBLIC)

1886 CITY LAYOUT

1886 CITY LAYOUT

N/F
ARCHER AUTO CO., INC.
BK/PG 4482/160
25-27 ARCHER ST
PL 15983
190-38

BLAKELIN STREET
(PUBLIC)

CITY LAYOUT

CITY LAYOUT

CONTINUED ON SHEET NO. 75

CONTINUED ON SHEET NO. 77

0 20 50 100

SCALE: 1" = 20'

LAWRENCE
LMRC RAIL TRAIL

STATE	FED. AID PROJ. NO.	SHEET NO.	TOTAL SHEETS
MA	CMQ-003S(733)X	77	245
PROJECT FILE NO.	608930		

UTILITY PLANS - 12 OF 16

608930_HDBA(UTILITY PLANS).DWG Plotted on 7-Sep-2024 12:07 PM

N

N/F
AA REAL ESTATE GROUP LLC
BK/PG 17290/6
139–143 MAY ST
211–4

PROP TEMP EASEMENT

N/F
ANTONIO A. RAMOS JR
& ELIZABETH A. LOPEZ
BK/PG 11798/140
149 MAY ST
211–3

ACCESS EASEMENT
FOR THE BENEFIT OF
#139–143 MAY STREET
BK/PG 11798/140

N/F
OSAGIE MATTHEW
BK/PG 16477/92
151–153 MAY ST
212–28

PROP 72'-6"
PERFORATED HDPE
INV ELEV = 69.3'

RET UPL 8020 & GUY

RET BOLLARD (MCI)

MAY STREET
(PUBLIC)

1855 CITY LAYOUT

74+03.04 LAWRENCE RAIL TRAIL B BL =
10+69.42 MANCHESTER STREET BL

N/F
ROBINSON DEJESUS
& RAQUEL CEPEDA
BK/PG 15145/206
167 MAY ST
212–25

N/F
CAROLINA FLORES
BK/PG 16467/190
157 MAY ST
212–27

N/F
CARMEN UBILEZ
BK/PG 13463/161
161–163 MAY ST
212–26

10' STEAMLINE
EASEMENT BK/PG
1581/11

PROP 2" PVC
CONDUIT (TYP)

ADJ HH (BO-MCI)

ADJ HH (BO-AT&T)

RR VAL MAP SEC. 7.4–2

RET UPL 8019

UPL 8019

5"STEEL FIBER–AT&T

CONTINUED ON
SHEET NO. 76

73.50

72.75

70

71

72

73

74

75

EXISTING RAILROAD

WOOD LIMIT

PILE LIMIT

CONST B

RET UPL 8021

UPL 8021

WOOD FENCE

1894 CITY LAYOUT

MANCHESTER STREET
(PUBLIC - 50.0' WIDE)

10+00

SMH7

RET UPL 2688 & GUY

UPL 2688

RET CB

10' STEAMLINE EASEMENT
BK/PG 1581/11

POST

CONC. PIERS

PROP ORNAMENTAL LP
(ITEM 812.992) (TYP)

PROP PB (TYP)

PROP TREE TRIMMING (TYP)

APPROX LOG (TYP)

RET UPL 820-3

RET UPL & GUY

ABAN
STEAM MH

PROP JUNCTION
BOX (TYP)

PROP HH (ITEM 811.24)

CITY OF LAWRENCE BRIDGE
EASEMENT (SEE VAL MAP)

PROP TEMP
EASEMENT

10' STEAMLINE EASEMENT
BK/PG 1581/11

PROP PERM EASEMENT

EXIST LIGHTING
LOAD CENTER NO. 4

RET ULT & GUY

CONTINUED ON
SHEET NO. 78

N/F
EIGHT BLAKELIN, LLC
BK/PG 11407/199
8 BLAKELIN ST
211–17

N/F
N & J PROPERTIES LLC
BK/PG 16176/231
72 MANCHESTER ST
212–23

N/F
EIGHT BLAKELIN, LLC
BK/PG 11407/201
10–12 BLAKELIN ST
212–17

N/F
MASSACHUSETTS BAY
TRANSPORTATION AUTHORITY
BK/PG 1299/162
MERRIMACK STREET
212–24

N/F
ROGER A. FARAH
BK/PG 9768/57
80 MANCHESTER ST
PL 6921, PL 13776
212–22

N/F
N & J PROPERTIES LLC
BK/PG 16176/231
74–76 MANCHESTER ST
212–21

10' ACCESS EASEMENT
BK/PG 1229/778

N/F
JOSE M. FERNANDEZ
& JOSE F. FERNANDEZ
BK/PG 16175/70
14–16 BLAKELIN ST
212–18

N/F
MIGUEL A. FERNANDEZ
& IDALIS FERNANDEZ
BK/PG 16911/228
18–20 BLAKELIN ST
212–19

N/F
& ALFREDO GIVSEPPI BIAJOLI
& ROBERTA P. BIAJOLI
BK/PG 17023/98
60–70 MANCHESTER ST
212–20

N/F
CITY OF LAWRENCE
BK/PG 15166/315
85 MANCHESTER ST
212–3–1

N/F
REYES LLC
BK/PG 15337/183
75 MANCHESTER ST
212–4

30' PRIVATE WAY

BLAKELIN STREET
(PUBLIC)

CITY LAYOUT

MANCHESTER STREET

1894 CITY LAYOUT

12"OI GAS-EVERSOURCE

8"PVC GAS-EVERSOURCE

EXISTING INVERT TABLE

CB16		SMH5	
RIM=60.12'		RIM=62.42'	
		INV.(a)=55.27	
CBC17		INV.(b)=55.01	
RIM=60.54'		INV.(c)=57.86	
TOP DEBRIS=58.24			
		SMH6	
SMH3		RIM=62.26'	
RIM=60.59'		INV.(a)=57.86	
INV.(a)=52.39		INV.(b)=56.66	
INV.(b)=53.31			
INV.(c)=52.65		SMH7	
		RIM=63.01	
SMH4		INV.(a)=57.21	
RIM=60.96'		INV.(b)=57.21	
INV.(a)=54.33		INV.(c)=59.41	
INV.(b)=54.43		INV.(d)=56.51	
INV.(c)=54.86			

0 20 50 100

SCALE: 1" = 20'

LAWRENCE
LMRC RAIL TRAIL

STATE	FED. AID PROJ. NO.	SHEET NO.	TOTAL SHEETS
MA	CMQ-003S(733)X	78	245
	PROJECT FILE NO.	608930	

UTILITY PLANS - 13 OF 16

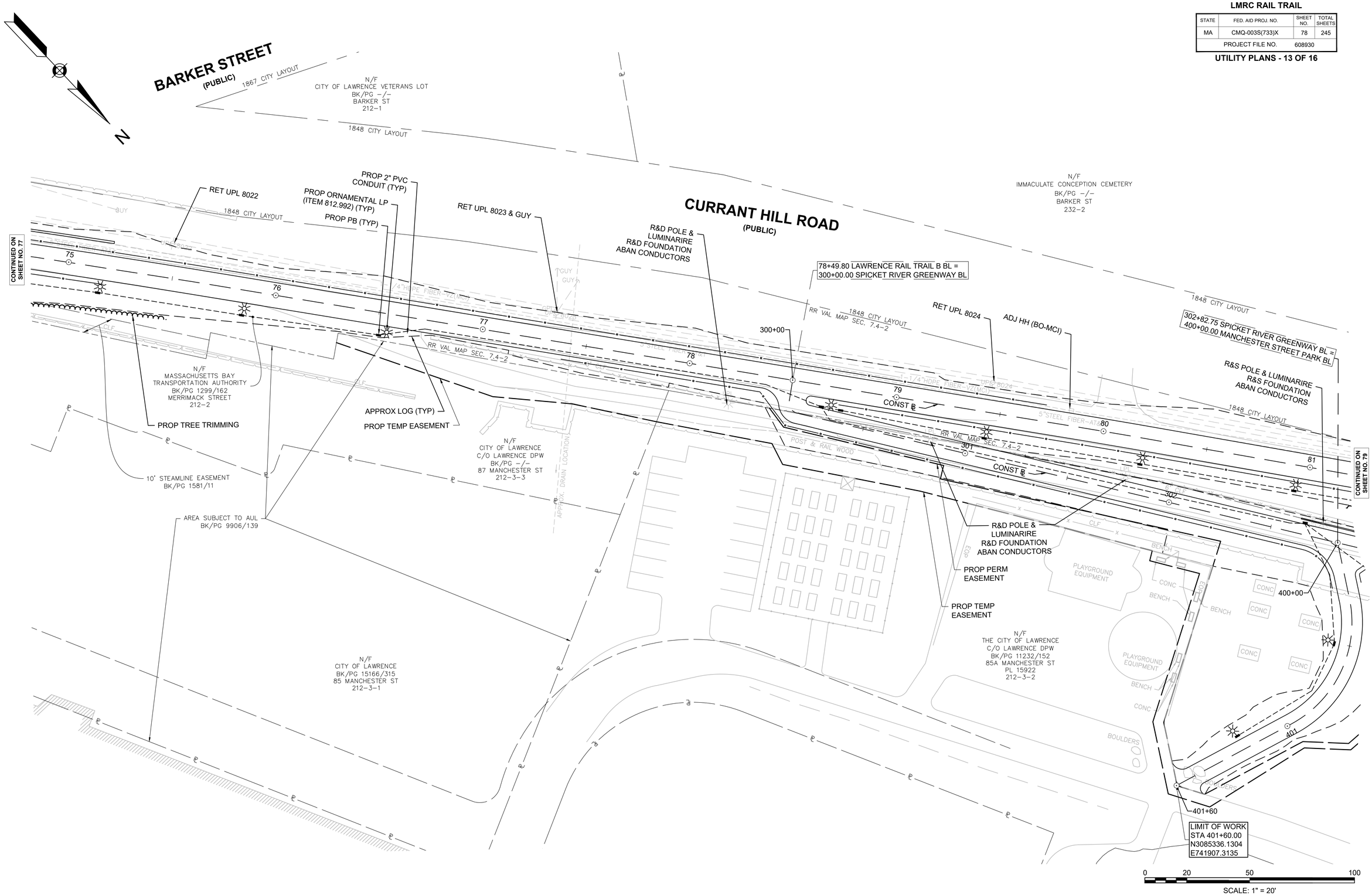

608930_HD8A(UTILITY PLANS).DWG Plotted on 7-Sep-2024 12:08 PM

LAWRENCE
LMRC RAIL TRAIL

STATE	FED. AID PROJ. NO.	SHEET NO.	TOTAL SHEETS
MA	CMQ-003S(733)X	79	245
PROJECT FILE NO.	608930		

UTILITY PLANS - 14 OF 16

608930_HD&N(UTILITY PLANS).DWG Plotted on 7-Sep-2024 12:08 PM

N

CONTINUED ON SHEET NO. 78

CURRANT HILL ROAD
(PUBLIC)

R&D POLE & LUMINARIRE
R&D FOUNDATION
ABAN CONDUCTORS

302+82.75 SPICKET RIVER GREENWAY BL =
400+00.00 MANCHESTER STREET PARK BL

RET UPL 8025

1848 CITY LAYOUT

UPL 8025
1-1/4"HDPE FIBER-VZ(MCI)
5"STEEL FIBER-AT&T

81 82 83 84 85 86

302 303 304 305 306 307 308

RET UPL 8026

CONST ℄

1848 CITY LAYOUT
RR VAL MAP SEC. 7.4-2

PROP TREE TRIMMING (TYP)

PROP 2" PVC CONDUIT (TYP)

RET UPL 8027 & GUY

GUY

R&D POLE & LUMINARIRE
R&D FOUNDATION
ABAN CONDUCTORS

400+00

RR VAL MAP SEC. 7.4-2

N/F
MASSACHUSETTS BAY
TRANSPORTATION AUTHORITY
BK/PG 1299/162
MERRIMACK STREET
212-2

C23

APPROX LOG (TYP)

6" CLP

R&D POLE & LUMINARIRE
R&D FOUNDATION
ABAN CONDUCTORS

REM DMH

PROP ORNAMENTAL LP
(ITEM 812.992) (TYP)

PROP PB (TYP)

CONTINUED ON SHEET NO. 80

REM DMH;
REM PIPE AS NECESSARY;
PROP MASONRY PLUG

REM DMH & PIPE

PROP PERM EASEMENT

PROP TEMP EASEMENT

R&D POLE & LUMINARIRE
R&D FOUNDATION
ABAN CONDUCTORS

401 401+60

LIMIT OF WORK
STA 401+60.00
N3085336.1304
E741907.3135

N/F
THE CITY OF LAWRENCE
C/O LAWRENCE DPW
BK/PG 11232/152
85A MANCHESTER ST
PL 15922
212-3-2

12 ' SPICKET RIVER GREENWAY

#2.105 #2.104 #2.103 #2.102 BVW #2.106 #2.107 #2.100 #B7.121 #B7.120 #B7.122 #B7.119 BANK #B7.118 #B7.117 #B7.116 #B7.115 #B7.114 #B7.113 BANK #B7.112 #B7.111 #B7.110 #B7.109 #B7.108 #B7.107 BANK #B7.106

25-FT RIVERFRONT AREA
LIMIT OF RESOURCE AREA
AS FLAGGED BY NOVER ARMSTRONG
ON MARCH 10, 2017. (TYP.)

0 20 50 100
SCALE: 1" = 20'

LAWRENCE
LMRC RAIL TRAIL

STATE	FED. AID PROJ. NO.	SHEET NO.	TOTAL SHEETS
MA	CMQ-003S(733)X	80	245
PROJECT FILE NO.	608930		

UTILITY PLANS - 15 OF 16

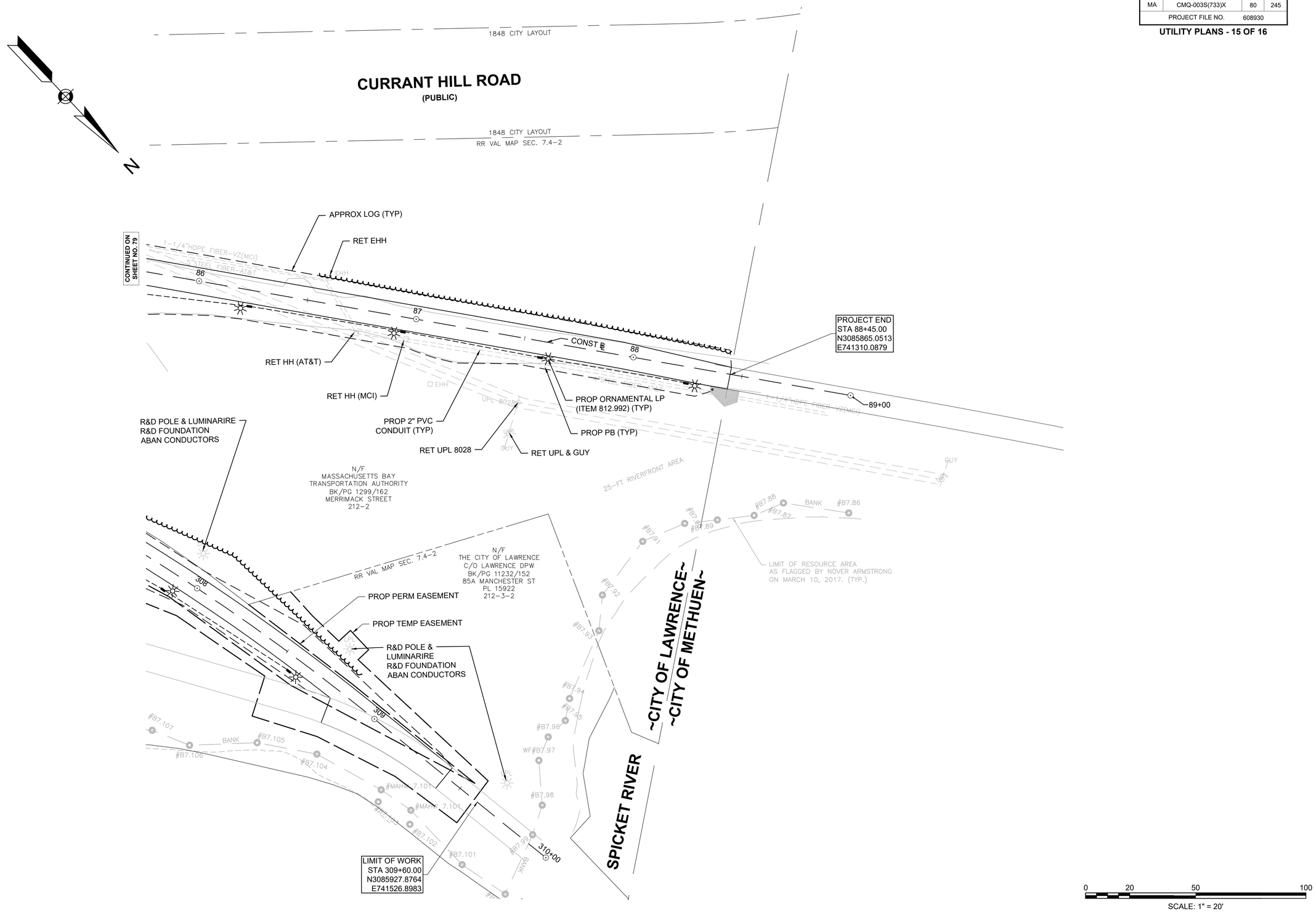

608930_HD8A(UTILITY PLANS).DWG Plotted on 7-Sep-2024 12:08 PM

LAWRENCE
LMRC RAIL TRAIL

STATE	FED. AID PROJ. NO.	SHEET NO.	TOTAL SHEETS
MA	CMQ-003S(733)X	81	245
PROJECT FILE NO.	608930		

UTILITY PLANS - 16 OF 16

608930_HDR(UTILITY PLANS).DWG Plotted on 7-Sep-2024 12:20 PM

N

BYRON J. RAMIREZ RODRIGUEZ
BK/PG 16383/63
293 LOWELL STREET
MAP/LOT 166/28

ZACHARY MACARO
BK/PG 11843/318
285 LOWELL STREET
MAP/LOT 166/30

MASSACHUSETTS BAY TRANSPORTATION AUTHORITY
BK/PG 1299/162
LOWELL STREET
MAP/LOT 167/2

436 SOUTH UNION REALTY TRUST
BK/PG 16629/144
291 LOWELL ST
MAP/LOT 166/29

283 LOWELL STREET LAWRENCE, LLC
BK/PG 12763/126
283 LOWELL STREET
MAP/LOT 166/31

PROP RAIL TRAIL WORK (SEE SHEET 71)

ENCROACHMENT EASEMENT BK/PG 3036/317

3' MAINTAINENCE EASEMENT BK/PG 3036/317

MASSDOT BRIDGE EASEMENT BK/PG 1280/493

10' STREAMLINE EASEMENT BK/PG 1581/11

N47°20'32"W 827.94'

510+49.07 LOWELL STREET BL = 41+15.40 LAWRENCE RAIL TRAIL BL

R&R AT&T CONDUIT; PROP CLASS A TRENCH (BELOW BRIDGE - SEE SHEET 71)

CLEAN AND ABAN TMH (BO-VZ)

PROP TEMP EASEMENT

ADJ WSO

PROP 1" COPPER TUBING, TYPE K & 1" CORPORATION

VERIZON UTILITY CONDUITS UNDER WD PLANK WALK (5 LARGE COPPER CABLES IN DUCT)

REM EXIST BRIDGE (SEE BRIDGE PLANS)

PROP TEMP EASEMENT

R&D TELE DUCT (TMH 255A TO TMH255); NO ASBESTOS FOUND VIA TESTING

ADJ TMH 255 (BO)

ADJ WG

RET HYD

ADJ SMH

PROP 6-4" PVC TELE CONDUIT

RET GPL 1569-1

PROP FDP PATCH

RET GPL 84

PROP 1-4" PVC SCH 40 CONDUIT (CONC ENCASED)

PROP FDP PATCH

LOWELL STREET

1853 CITY LAYOUT

508+00

509

510

511

512

513

CONST ℄

ADJ WG

PROP FDP

R&D WG & PIPE

PROP 8" WG

PROP 6" CAP

PROP 1-4" PVC TELE CONDUIT

PROP 1" COPPER TUBING, TYPE K & 1" CORPORATION

PROP 45° BEND RELOC UPL 1571 (BO-NGRID)

R&D WG; PROP 8" WG

RET UPL 1570; PROP TELE RISER (BO-VZ)

PROP 8" CLDI

PROP TELE OHW FROM POLE 1570 TO POLE 1576 (BO-VZ)

PROP TEMP EASEMENT

PROP 8" CLDI W/ INSULATION FROM STA 9+85 TO 11+02

PROP SHLO ALT NO. 8983

PROP 45° BEND

RET ULT 1572

PROP REDUCER 8"x6"; PROP 8"X6" TEE

ADJ WG

ADJ HYD

PROP TEMP EASEMENT

PROP CITY LO ALT NO. 8983

RET UPL 1567

RET ULT 1569

RET UPL 1573

RET UPL 1574

RET ULT #1576

PROJECT BEGIN
STA 508+75.00
N3082371.2488
E744401.9855

PROJECT END
STA 513+75.00
N3082632.4552
E744828.3319

LMRC RAIL TRAIL

WINTER STREET

1877 CITY LAYOUT

WILLIAM J. MATTHES, JR.
BK/PG 1571/4
292 LOWELL ST
MAP/LOT 166/66

WILLIAM J. MATTHES, JR.
BK/PG 1577/189
284–286 LOWELL ST
MAP/LOT 166/66

RET UPL #85/1

14' COMMON PASSAGEWAY BK/PG 1577/189

PROP RAIL TRAIL WORK (SEE SHEET 71)

MASSACHUSETTS BAY TRANSPORTATION AUTHORITY
BK/PG 1299/162
LOWELL STREET
MAP/LOT 166/65

MERRIMACK STREET LLC
BK/PG 15698/44
33–37 WINTER STREET
MAP/LOT 166/69

DAVID A. BIDER & SYLVIA M. BIDER
BK/PG 3161/316
278 LOWELL STREET
MAP/LOT 166/64

FULTON STREET CORPORATION
BK/PG 3936/289
BROADWAY
(REAR OF 92–98)
MAP/LOT 166/51

FULTON STREET CORPORATION
BK/PG 3936/289
266 LOWELL STREET
MAP/LOT 166/61

RAYPROGRESS, LLC
BK/PG 17116/342
364 LOWELL STREET
MAP/LOT 166/60

FULTON STREET CORPORATION
BK/PG 3936/289
262 LOWELL STREET
MAP/LOT 166/59

14' COMMON PASSAGEWAY

THE 290 LOWELL STREET REALTY TRUST
BK/PG 4694/65
270–272 LOWELL STREET
MAP/LOT 166/62

DAVID A. BIDER & SYLVIA M. BIDER
BK/PG 3161/316
274–276 LOWELL STREET
MAP/LOT 166/63

RAYPROGRESS, LLC
BK/PG 17116/342
617 REAR
COMMON STREET
MAP/LOT 166/58

MASSDOT BRIDGE EASEMENT BK/PG 1280/493

NOTE: THE CONTRACTOR SHALL INSTALL AND PROPERLY CAP TELE CONDUIT UP TO TMH 266 & TMH 255.
THE CONTRACTOR SHALL NOT ENTER INTO TMH 266 OR TMH 255 WITHOUT COORDINATION WITH VERIZON.

0 20 50 100
SCALE: 1" = 20'

LAWRENCE
LMRC RAIL TRAIL

STATE	FED. AID PROJ. NO.	SHEET NO.	TOTAL SHEETS
MA	CMQ-003S(733)X	82	245
PROJECT FILE NO.	608930		

LIGHTING PLANS - 1 OF 15

608930_HDS(CONSTRUCTION PLANS)_LIGHTING_FINAL_120.DWG Plotted on 4-Sep-2024 2:36 PM

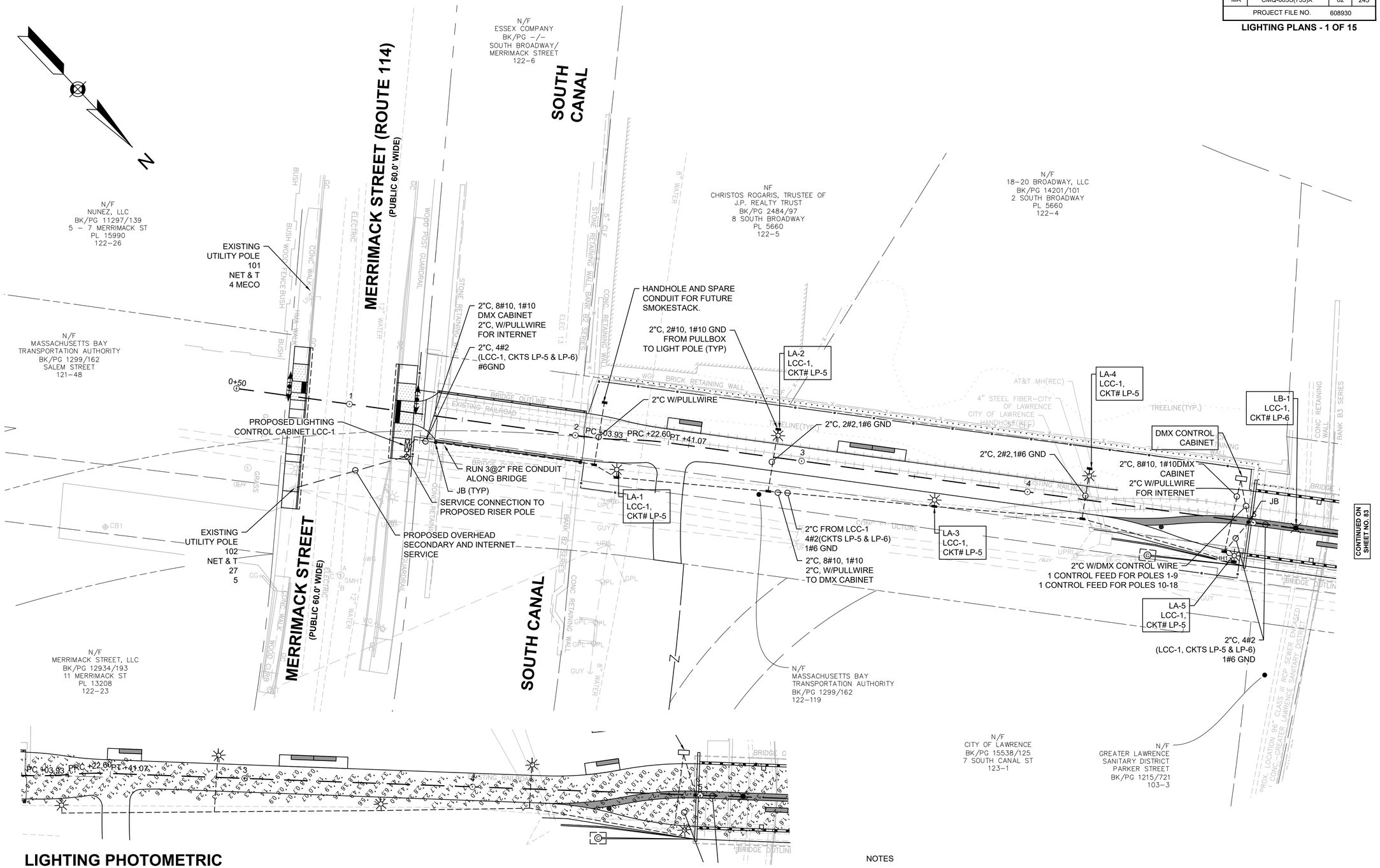

LIGHTING PHOTOMETRIC

Statistics						
Description	Symbol	Avg	Max	Min	Max/Min	Avg/Min
BEGINNING OF PATH + BRIDGE	+	1.8 fc	7.1 fc	0.5 fc	14.2:1	3.6:1

NOTES

1. DMX WIRE MUST DAISY CHAIN AND BE CONTINUOUS FROM CONTROLLER TO DRIVER; NO T-TAPS OR START TOPOLOGY OR SPLICES
2. DMX TERMINATOR MUST BE INSTALLED AT THE END OF EACH DMX RUN

0 20 50 100

SCALE: 1" = 20'

LAWRENCE
LMRC RAIL TRAIL

STATE	FED. AID PROJ. NO.	SHEET NO.	TOTAL SHEETS
MA	CMQ-003S(733)X	83	245
PROJECT FILE NO.	608930		

LIGHTING PLANS - 2 OF 15

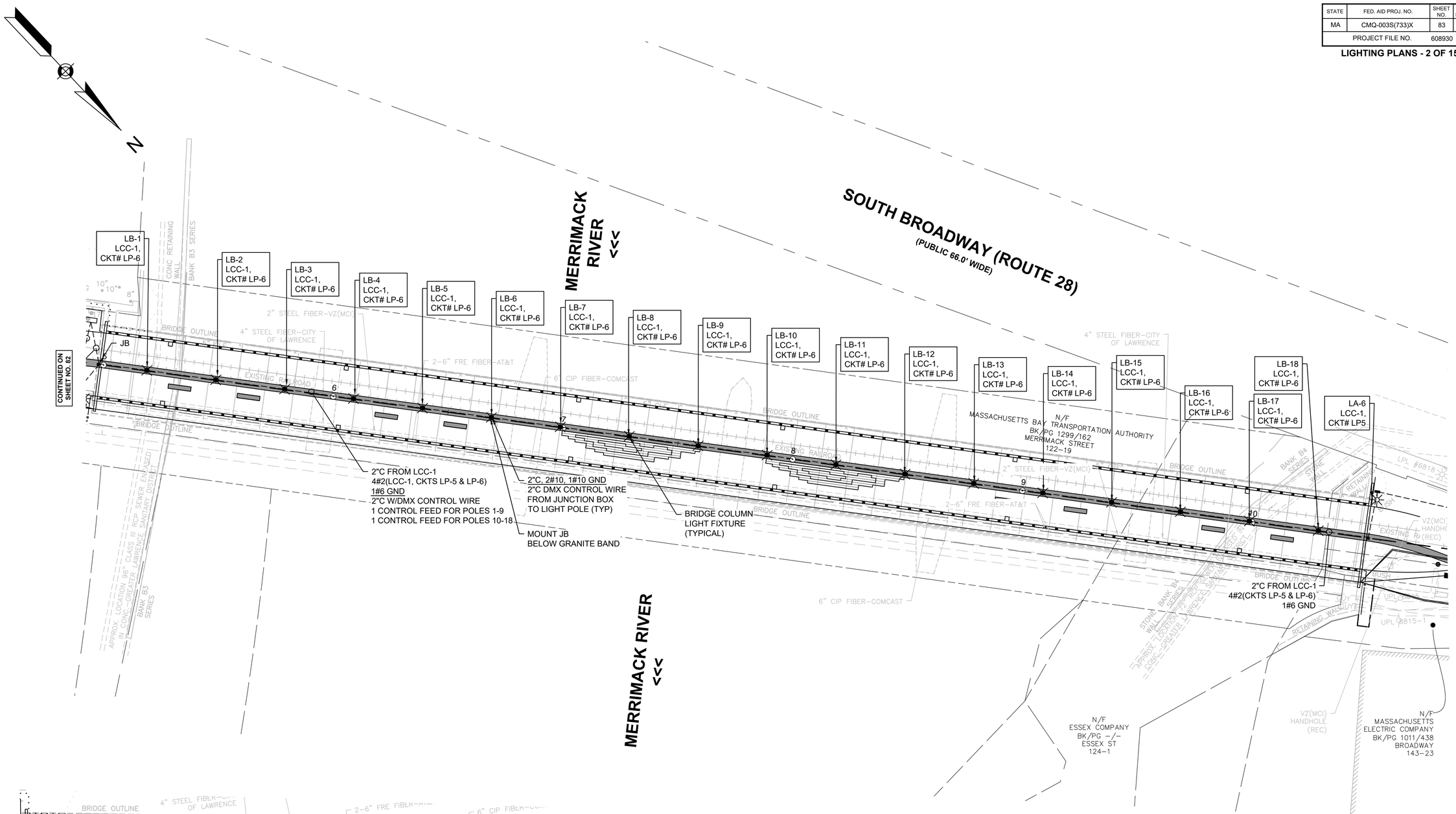

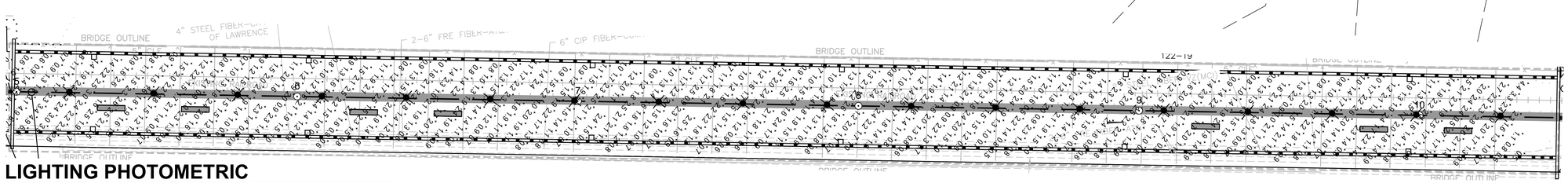

LIGHTING PHOTOMETRIC

Statistics						
Description	Symbol	Avg	Max	Min	Max/Min	Avg/Min
BEGINNING OF PATH + BRIDGE	+	1.8 fc	7.1 fc	0.5 fc	14.2:1	3.6:1

NOTES

1. DMX WIRE MUST DAISY CHAIN AND BE CONTINUOUS FROM CONTROLLER TO DRIVER; NO T-TAPS OR START TOPOLOGY OR SPLICES
2. DMX TERMINATOR MUST BE INSTALLED AT THE END OF EACH DMX RUN

0 20 50 100
SCALE: 1" = 20'

608930_HD5(CONSTRUCTION PLANS)_LIGHTING_FINAL_120.DWG Plotted on 4-Sep-2024 2:36 PM

LAWRENCE
LMRC RAIL TRAIL

STATE	FED. AID PROJ. NO.	SHEET NO.	TOTAL SHEETS
MA	CMQ-003S(733)X	84	245
PROJECT FILE NO.	608930		

LIGHTING PLANS - 3 OF 15

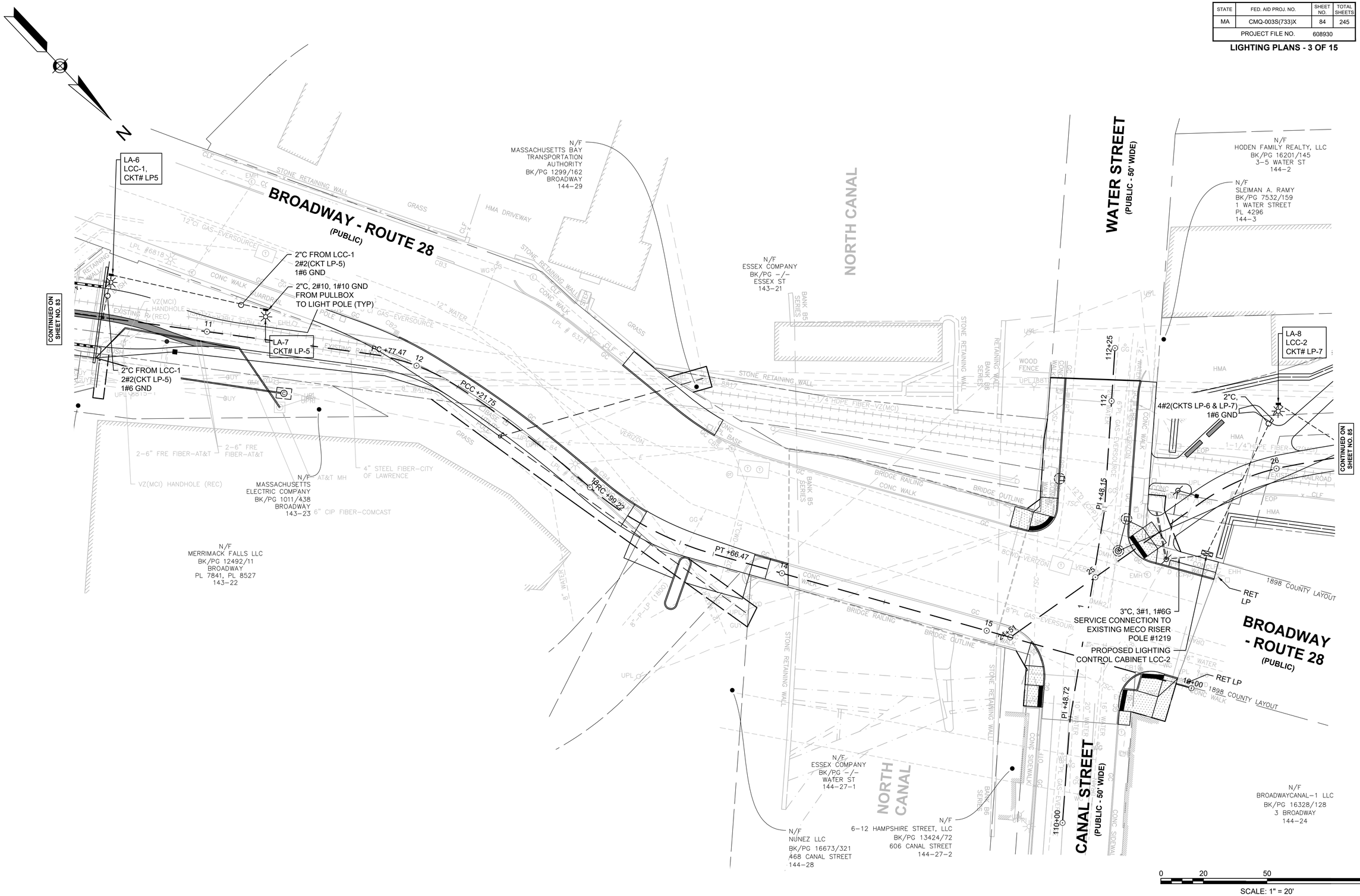

608930_HD5(CONSTRUCTION PLANS)_LIGHTING_FINAL_120.DWG Plotted on 4-Sep-2024 2:36 PM

LAWRENCE
LMRC RAIL TRAIL

STATE	FED. AID PROJ. NO.	SHEET NO.	TOTAL SHEETS
MA	CMQ-003S(733)X	85	245
PROJECT FILE NO.	608930		

LIGHTING PLANS - 4 OF 15

608930_HDS\CONSTRUCTION PLANS_LIGHTING_FINAL_120.DWG Plotted on 4-Sep-2024 2:37 PM

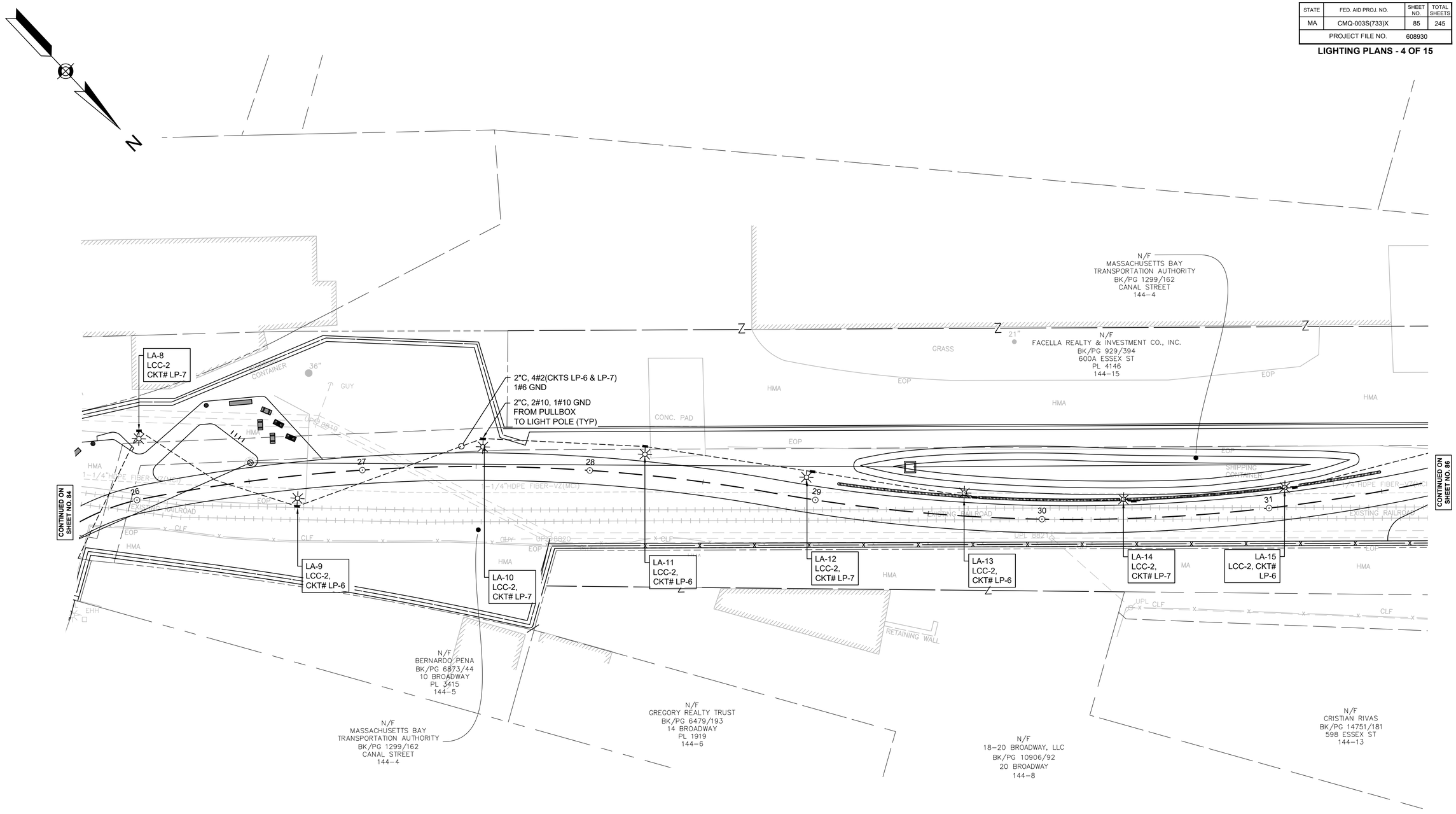

TYPICAL LIGHTING PHOTOMETRIC - 70' SPACING

Statistics						
Description	Symbol	Avg	Max	Min	Max/Min	Avg/Min
TYPICAL SPACING @ 70' OC	+	3.3 fc	7.2 fc	0.8 fc	9.0:1	4.1:1

0 20 50 100

SCALE: 1" = 20'

LAWRENCE
LMRC RAIL TRAIL

STATE	FED. AID PROJ. NO.	SHEET NO.	TOTAL SHEETS
MA	CMQ-003S(733)X	86	245
PROJECT FILE NO.	608930		

LIGHTING PLANS - 5 OF 15

608930_HDS(CONSTRUCTION PLANS)_LIGHTING_FINAL_120.DWG Plotted on 4-Sep-2024 2:37 PM

N

ESSEX STREET
(PUBLIC - 60.0' WIDE)

90+00

N/F
FACELLA REALTY & INVESTMENT
BK/PG 39/557
600 ESSEX ST
144-16

N/F
GANGI REALTY CORPORATION
BK/PG 1617/157
621 ESSEX ST
165-36-B

N/F
GANGI REALTY CORPORATION
BK/PG -/-
19 WINTER STREET
PL 5746
165-33

2"C FROM LCC-2
4#2(CKTS LP-6 & LP-7)
1#6 GND

LA-17
LCC-2,
CKT# LP-6

2"C FROM LCC-2
4#2(CKTS LP-6 & LP-7)
1#6 GND
2"C SPARE

2"C FROM LCC-2
4#2(CKTS LP-6 & LP-7)
1#6 GND

2"C, 2#10, 1#10 GND
FROM PULLBOX
TO LIGHT POLE (TYP)

LA-16
LCC-2,
CKT# LP-7

LA-18
LCC-2,
CKT# LP-7

LA-19
LCC-2,
CKT# LP-6

LA-20
LCC-2,
CKT# LP-7

LA-21
LCC-2,
CKT# LP-6

LA-22
LCC-2,
CKT# LP-7

LA-23
LCC-2,
CKT# LP-6

CONTINUED ON SHEET NO. 85

CONTINUED ON SHEET NO. 87

N/F
ARROW FLOOR & WALL
COVERING CO.
BK/PG 1112/450
619 ESSEX STREET
165-37

N/F
JOAQUIN ROSA
BK/PG 9397/270
621 COMMON ST
PL 4211
166-45

N/F
FULTON STREET CORPORATION
BK/PG 3936/289
REAR 92-98 BROADWAY
PL 4226
166-51

N/F
CRISTIAN RIVAS
BK/PG 14751/181
598 ESSEX ST
144-13

N/F
MASSACHUSETTS BAY
TRANSPORTATION AUTHORITY
BK/PG 1299/162
LOWELL STREET
166-65

ESSEX STREET
(PUBLIC - 80.0' WIDE)

93+00

COMMON STREET
(PUBLIC - 60.0' WIDE)

N/F
MCDONALD'S CORPORATION
BK/PG 3122/53
50 BROADWAY
145-1

N/F
AJ WOLF REALTY, LLC
BK/PG 5711/309
613 COMMON STREET
PL 5746
166-47

N/F
CITY OF LAWRENCE
BK/PG -/-
617 COMMON STREET
PL 5746
166-46

0 20 50 100
SCALE: 1" = 20'

LAWRENCE
LMRC RAIL TRAIL

STATE	FED. AID PROJ. NO.	SHEET NO.	TOTAL SHEETS
MA	CMQ-003S(733)X	87	245
PROJECT FILE NO.	608930		

LIGHTING PLANS - 6 OF 15

608930_HDS(CONSTRUCTION PLANS)_LIGHTING_FINAL_120.DWG Plotted on 4-Sep-2024 2:37 PM

N

WINTER STREET
(PUBLIC)

LOWELL STREET
(PUBLIC - 50.0' WIDE)

N/F
GANGI REALTY CORPORATION
BK/PG -/-
19 WINTER STREET
PL 5746
165-33

N/F
THE 620 ESSEX STREET LLC
BK/PG 14245/39
27 WINTER STREET
PL 15028
166-70

N/F
MERRIMACK STREET LLC
BK/PG 15698/44
33-37 WINTER STREET
166-69

N/F
WILLIAM J. MATTHES, JR.
1881/213
292 LOWELL ST
166-66

N/F
ZACHARY MACARO
BK/PG 11843/318
285 LOWELL ST
PL 1011
166-30

N/F
436 SOUTH UNION REALTY TRUST
BK/PG 16629/144
291 LOWELL ST
PL 1011
166-29

PROPOSED INVASIVE SPECIES REMOVAL WITHIN LAYOUT LIMITS

CONTINUED ON SHEET NO. 86

2"C, 2#10, 1#10 GND FROM PULLBOX TO LIGHT POLE (TYP)

LA-24 LCC-2, CKT# LP-7

LA-25 LCC-3, CKT# LP-7

LA-26 LCC-3, CKT# LP-8

2"C, 4#2(CKTS LP-7 & LP-8) 1#6 GND

LA-27 LCC-3, CKT# LP-7

2"C FROM LCC-3 4#2(CKTS LP-7 & LP-8) 1#6 GND

LA-28 LCC-3, CKT# LP-8

LA-29 LCC-3, CKT# LP-7

LA-30 LCC-3, CKT# LP-8

LA-31 LCC-3, CKT# LP-7

CONTINUED ON SHEET NO. 88

BRIDGE OUTLINE

BRIDGE PIER(WOOD)

RETAINING WALL (BRIDGE PIER)

N/F
FULTON STREET CORPORATION
BK/PG 3936/289
REAR 92-98 BROADWAY
PL 4226
166-51

N/F
CITY OF LAWRENCE
BK/PG -/-
617 COMMON STREET
PL 5746
166-46

N/F
MASSACHUSETTS BAY TRANSPORTATION AUTHORITY
BK/PG 1299/162
LOWELL STREET
166-65

N/F
FULTON STREET CORPORATION
BK/PG 3936/289
REAR 617 COMMON STREET
166-58

N/F
DAVID A. BIDER & SYLVIA M. BIDER
BK/PG 3161/316
278 LOWELL ST
PL 7005
166-64

N/F
THE 290 LOWELL STREET REALTY TRUST
BK/PG 4694/65
270-272 LOWELL ST
166-62

N/F
DAVID A. BIDER & SYLVIA M. BIDER
BK/PG 3161/316
274-276 LOWELL ST
166-63

N/F
283 LOWELL STREET LAWRENCE, LLC
BK/PG 12763/126
283 LOWELL ST
166-31

0 20 50 100
SCALE: 1" = 20'

LAWRENCE
LMRC RAIL TRAIL

STATE	FED. AID PROJ. NO.	SHEET NO.	TOTAL SHEETS
MA	CMQ-003S(733)X	88	245
PROJECT FILE NO.	608930		

LIGHTING PLANS - 7 OF 15

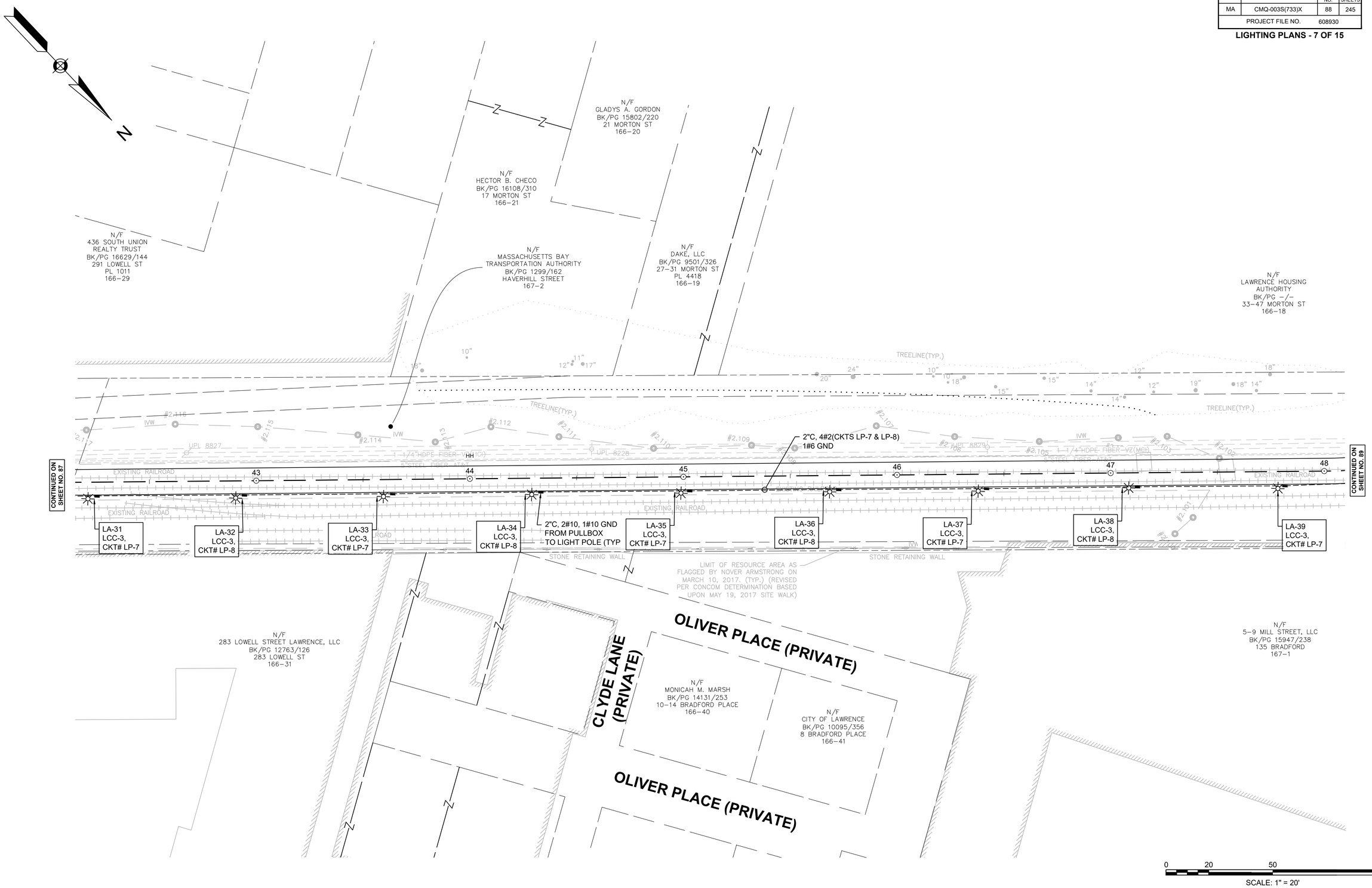

608930_HD5(CONSTRUCTION PLANS)_LIGHTING_FINAL_120.DWG Plotted on 4-Sep-2024 2:37 PM

LAWRENCE
LMRC RAIL TRAIL

STATE	FED. AID PROJ. NO.	SHEET NO.	TOTAL SHEETS
MA	CMQ-003S(733)X	89	245
PROJECT FILE NO.	608930		

LIGHTING PLANS - 8 OF 15

608930_HDS(CONSTRUCTION PLANS)_LIGHTING_FINAL_120.DWG Plotted on 4-Sep-2024 2:37 PM

N

MORTON STREET
(PUBLIC - 50.0' WIDE)

HAVERHILL STREET - ROUTE 110
(PUBLIC - 50.0' WIDE)

N/F
LAWRENCE HOUSING AUTHORITY
BK/PG -/-
33-47 MORTON ST
166-18

N/F
COLONY REALTY TRUST
BK/PG 10851/161
431 HAVERHILL ST
189-55

N/F
COLONY REALTY TRUST
BK/PG 4648/253
13 RAILROAD ST
189-50

N/F
MASSACHUSETTS ELECTRIC COMPANY
BK/PG 1074/21
425 HAVEHILL ST
PL 5594
189-56

N/F
5-9 MILL STREET, LLC
BK/PG 15947/238
135 BRADFORD
167-1

N/F
BERNARDO PENA
BK/PG 6731/168
413-415 HAVERHILL ST
167-3

N/F
LAWRENCE FAMILY DEVELOPMENT AND EDUCATION FUND, INC.
BK/PG 4309/86
32 WEST STREET
189-58

N/F
MASSACHUSETTS BAY TRANSPORTATION AUTHORITY
BK/PG 1299/162
MERRIMACK STREET
212-24

CONTINUED ON SHEET NO. 88

CONTINUED ON SHEET NO. 90

LA-39 LCC-3, CKT# LP-7

LA-40 LCC-3, CKT# LP-8

LA-41 LCC-3, CKT# LP-7

LA-42 LCC-3, CKT# LP-6

LA-43 LCC-3, CKT# LP-5

LA-44 LCC-3, CKT# LP-6

LA-45 LCC-3, CKT# LP-5

LA-46 LCC-3, CKT# LP-6

LA-47 LCC-3, CKT# LP-5

2@2"C FROM LCC-3 (1-SPARE) 4#2(CKTS LP-7 & LP-8) 1#6 GND

2"C FROM LCC-3 8#2(CKTS LP-5,6,7,8) 1#6 GND

3"C, 3#1, 1#6G SERVICE CONNECTION TO EXISTING MECO RISER POLE #1739

PROPOSED LIGHTING CONTROL CABINET LCC-3

2"C FROM LCC-3 4#2(CKTS LP-7 & LP-8) 1#6 GND

2"C, 2#10, 1#10 GND FROM PULLBOX TO LIGHT POLE (TYP)

"CONC STEP"

"STEEL POST"

MHT RIM=60.51 SUMP=53.36

BUSH

WOOD FENCE

RAISED LANDSCAPE ISLAND

EXISTING RAILROAD

5"STEEL FIBER-AT&T

1-1/4"HDPE FIBER-VZ(MCI

UPL 8832

0 20 50 100

SCALE: 1" = 20'

LAWRENCE
LMRC RAIL TRAIL

STATE	FED. AID PROJ. NO.	SHEET NO.	TOTAL SHEETS
MA	CMQ-003S(733)X	90	245
PROJECT FILE NO.	608930		

LIGHTING PLANS - 9 OF 15

RAILROAD STREET
(PUBLIC)

N/F
COLONY REALTY TRUST
BK/PG 10260/92
25 RAILROAD ST
189-49

N/F
COLONY REALTY TRUST
BK/PG 4648/253
13 RAILROAD ST
189-50

N/F
MASSACHUSETTS ELECTRIC COMPANY
BK/PG 1074/21
425 HAVEHILL ST
PL 5594
189-56

N/F
JAVIER RAFAEL JR
& MARIA JAVIER
BK/PG 15611/222
41 RAILROAD ST
189-48-2

N/F
RAFAEL JAVIER
& MARIA JAVIER
BK/PG 6464/178
45 RAILROAD ST
PL 14085
189-48-1

N/F
JOSE M. BATISTA ESPINAL
BK/PG 16185/187
51 RAILROAD ST
189-47

N/F
JACQUES OUELLET
& LOUISE OUELLET
BK/PG 1341/440
55 RAILROAD ST
189-46

N/F
MASSACHUSETTS BAY
TRANSPORTATION AUTHORITY
BK/PG 1299/162
MERRIMACK STREET
212-24

N/F
LAWRENCE FAMILY DEVELOPMENT
AND EDUCATION FUND, INC.
BK/PG 4309/86
32 WEST STREET
189-58

N/F
MASSACHUSETTS ELECTRIC COMPANY
BK/PG -/-
50 WEST ST
189-59

N/F
130-136 WEST STREET, LLC
BK/PG 10129/3
CERT# 15412
LCC 19576A
WEST STREET
190-11

2"C, 4#2(CKTS LP-5 & LP-6)
1#6 GND

2"C, 2#10, 1#10 GND
FROM PULLBOX
TO LIGHT POLE (TYP)

LA-47 LCC-3, CKT# LP-5
LA-48 LCC-3, CKT# LP-6
LA-49 LCC-3, CKT# LP-5
LA-50 LCC-3, CKT# LP-6
LA-51 LCC-3, CKT# LP-5
LA-52 LCC-3, CKT# LP-6
LA-53 LCC-3, CKT# LP-5
LA-54 LCC-3, CKT# LP-6
LA-55 LCC-4, CKT# LP-1

CONTINUED ON SHEET NO. 89
CONTINUED ON SHEET NO. 91

EXISTING INVERT TABLE

SMH2
RIM=61.18'

0 20 50 100
SCALE: 1" = 20'

608930_HDS(CONSTRUCTION PLANS)_LIGHTING_FINAL_120.DWG Plotted on 4-Sep-2024 2:37 PM

LAWRENCE
LMRC RAIL TRAIL

STATE	FED. AID PROJ. NO.	SHEET NO.	TOTAL SHEETS
MA	CMQ-003S(733)X	91	245
PROJECT FILE NO.	608930		

LIGHTING PLANS - 10 OF 15

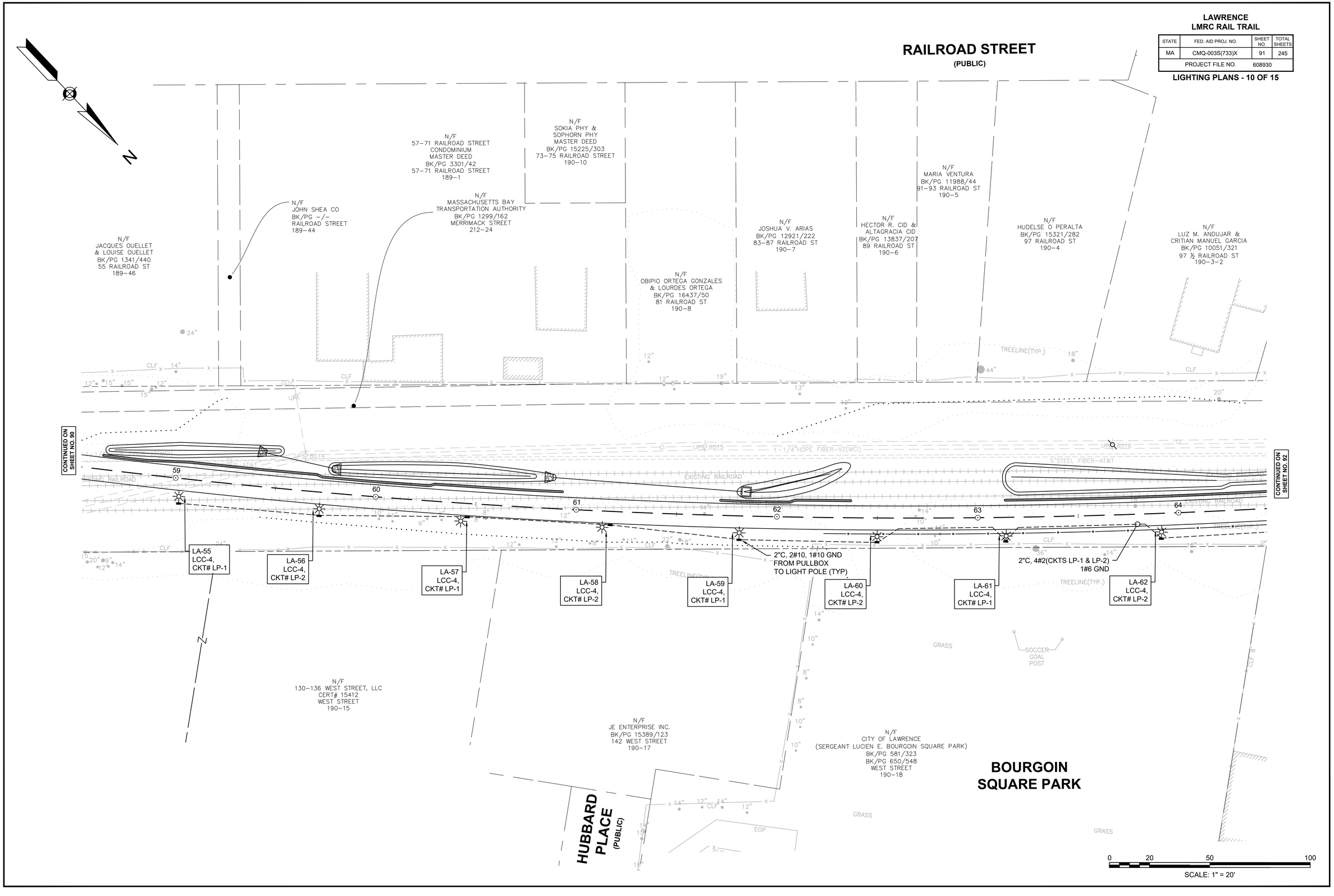

608930_HD5(CONSTRUCTION PLANS)_LIGHTING_FINAL_120.DWG Plotted on 4-Sep-2024 2:38 PM

LAWRENCE
LMRC RAIL TRAIL

STATE	FED. AID PROJ. NO.	SHEET NO.	TOTAL SHEETS
MA	CMQ-003S(733)X	92	245
PROJECT FILE NO.	608930		

LIGHTING PLANS - 11 OF 15

608930_HDS(CONSTRUCTION PLANS)_LIGHTING_FINAL_120.DWG Plotted on 4-Sep-2024 2:38 PM

N

N/F
LUZ M. ANDUJAR &
CRITIAN MANUEL GARCIA
BK/PG 10051/321
97 ½ RAILROAD ST
190–3–2

N/F
SOLANGE ACEVEDO
BK/PG 7575/167
103 MAY ST
211–14

N/F
LORENZO RODRIQUEZ
BK/PG 5918/26
109 MAY ST
211–13

N/F
111 MAY STREET TRUST
BK/PG 4482/130
119 MAY ST
211–10

N/F
GILBERTO MOSQUEA &
ARSENIA TORRES MANON
BK/PG 15178/187
123 MAY ST
211–9

N/F
GILCITA MARTINEZ
BK/PG 11269/46
125 MAY ST
211–8

N/F
OLGA CRUZ
BK/PG 17319/10
127 MAY ST
211–7

N/F
VICTOR HERNANDEZ
BK/PG 9665/119
131–133 MAY ST
211–6

N/F
AA REAL ESTATE
GROUP LLC
BK/PG 17290/6
139–143 MAY ST
211–4

N/F
JUANA E. VASQUEZ
BK/PG 11983/179
135–137 MAY ST
211–5

MAY STREET
(PUBLIC)

TREELINE(TYP.)
27"
24"
50"
20"
20"
CLF
CLF
CLF
CLF

CONTINUED ON SHEET NO. 91

1–1/4"HDPE FIBER–VZ(MCI)
UPC 8017
UPC 8018
UPC 8019
5"STEEL FIBER–AT&T
EXISTING RAILROAD
64
65
66
67
68
69
TREELINE(TYP.)
CLF WITH BARBED WIRE
RETAINING WALL
CONC.
STONE RETAINING WALL
CLF
STONE RETAINING WALL
CONC. PIERS
10"
14"
10"

2"C, 4#2(CKTS LP-1 & LP-2)
1#6 GND

2"C, 2#10, 1#10 GND
FROM PULLBOX
TO LIGHT POLE (TYP)

LA-63
LCC-4,
CKT# LP-1

LA-64
LCC-4,
CKT# LP-1

LA-65
LCC-4,
CKT# LP-2

LA-66
LCC-4,
CKT# LP-1

LA-67
LCC-4,
CKT# LP-2

LA-68
LCC-4,
CKT# LP-1

LA-69
LCC-4,
CKT# LP-2

LA-70
LCC-4,
CKT# LP-1

CONTINUED ON SHEET NO. 93

N/F
MASSACHUSETTS BAY
TRANSPORTATION AUTHORITY
BK/PG 1299/162
MERRIMACK STREET
212–24

N/F
ARCHER AUTO CO., INC.
BK/PG 1728/288
30–34 ARCHER ST
PL 15983
190–37

N/F
EIGHT BLAKELIN, LLC
BK/PG 11407/199
8 BLAKELIN ST
211–17

N/F
DISMANTLING, LLC
BK/PG 15225/52
26 WENDELL STREET
190–26

WENDELL STREET
(PUBLIC)

ARCHER STREET
(PUBLIC)

N/F
ARCHER AUTO CO., INC.
BK/PG 4482/160
25–27 ARCHER ST
PL 15983
190–38

BLAKELIN STREET
(PUBLIC)

0 20 50 100
SCALE: 1" = 20'

LAWRENCE
LMRC RAIL TRAIL

STATE	FED. AID PROJ. NO.	SHEET NO.	TOTAL SHEETS
MA	CMQ-003S(733)X	93	245
PROJECT FILE NO.	608930		

LIGHTING PLANS - 12 OF 15

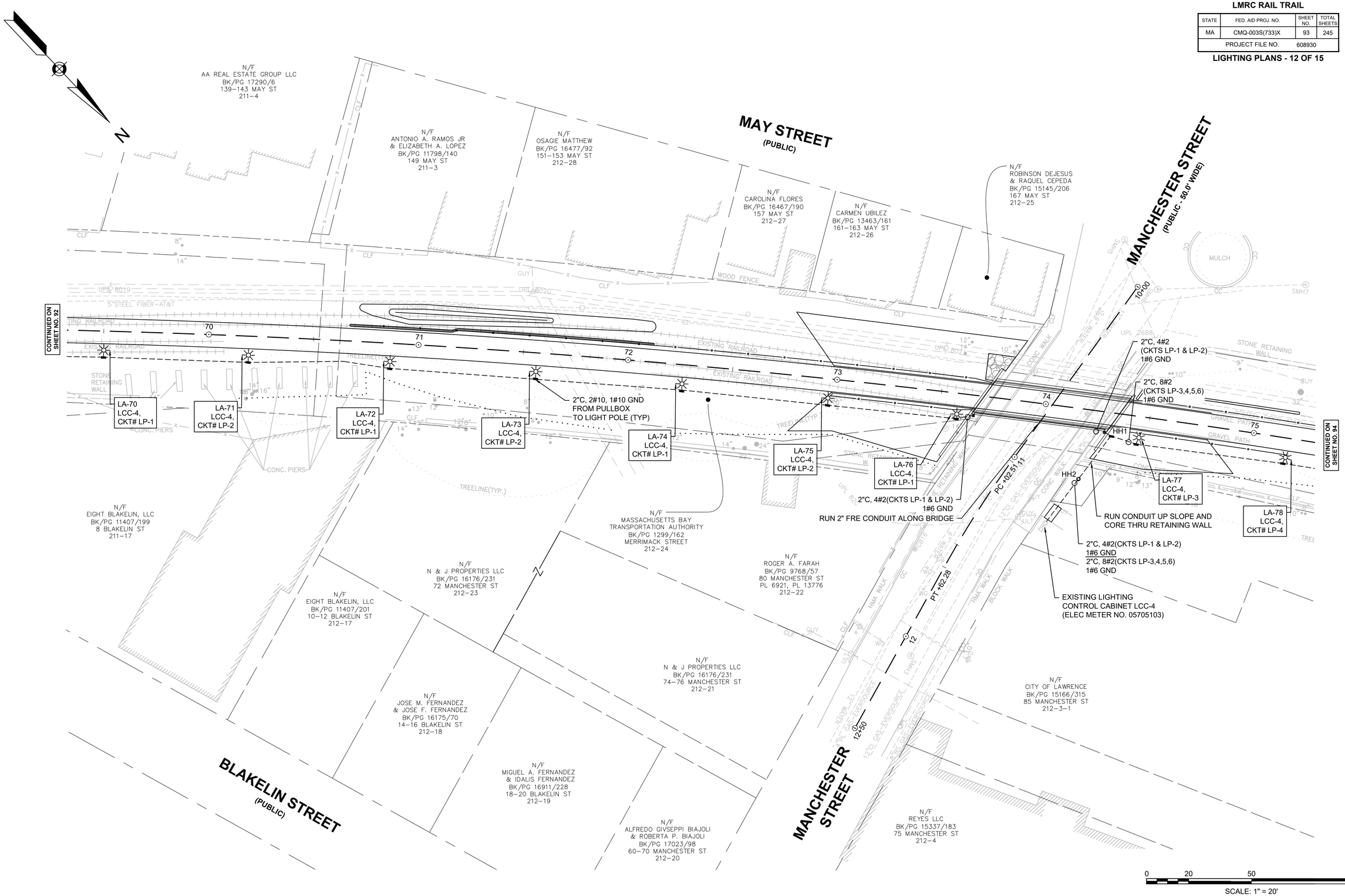

608930_HD5(CONSTRUCTION PLANS)_LIGHTING_FINAL_120.DWG Plotted on 4-Sep-2024 2:38 PM

LAWRENCE
LMRC RAIL TRAIL

STATE	FED. AID PROJ. NO.	SHEET NO.	TOTAL SHEETS
MA	CMQ-003S(733)X	94	245
PROJECT FILE NO.	608930		

LIGHTING PLANS - 13 OF 15

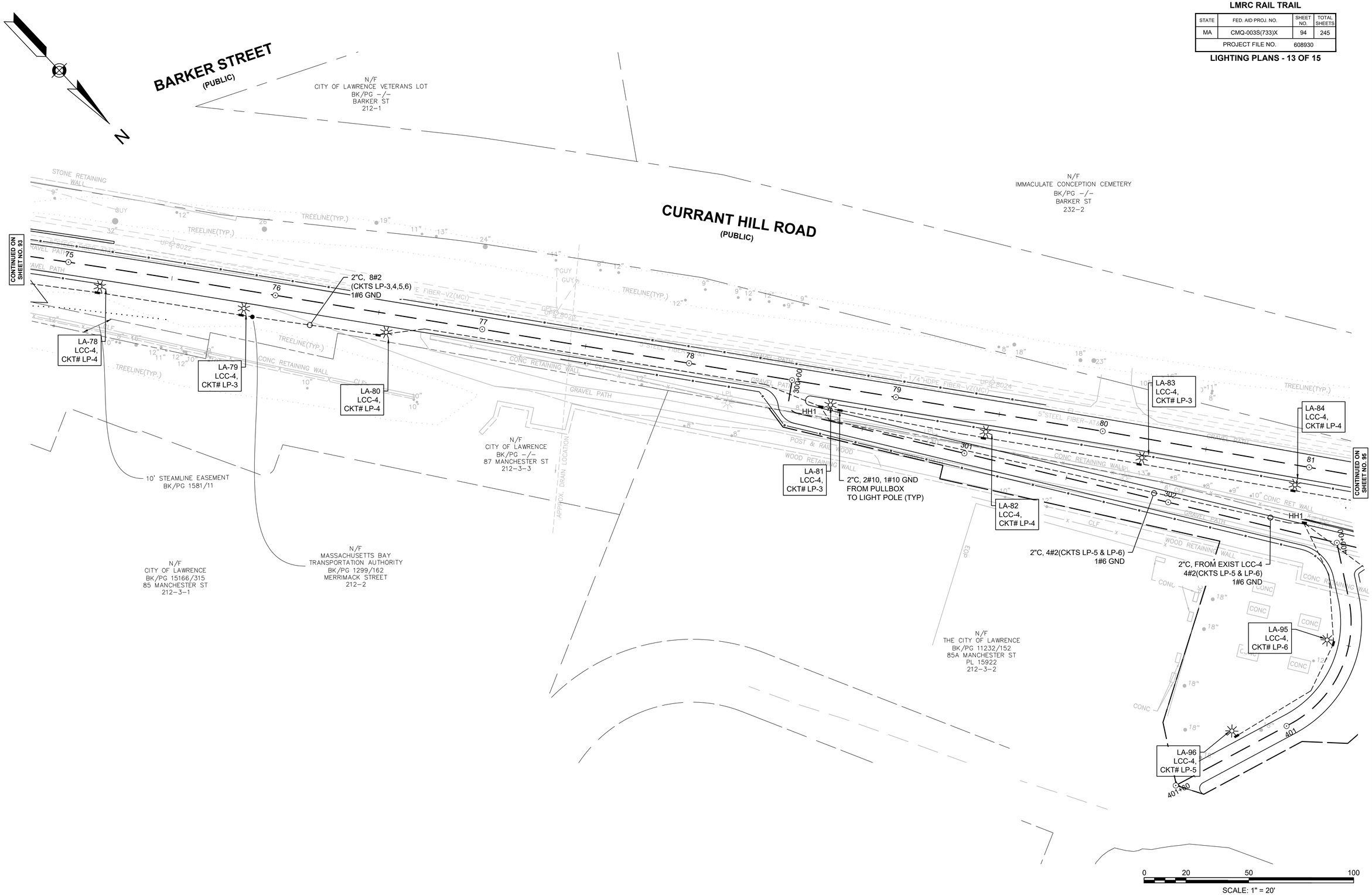

608930_HD5(CONSTRUCTION PLANS)_LIGHTING_FINAL_120.DWG Plotted on 4-Sep-2024 2:38 PM

LAWRENCE
LMRC RAIL TRAIL

STATE	FED. AID PROJ. NO.	SHEET NO.	TOTAL SHEETS
MA	CMQ-003S(733)X	95	245
PROJECT FILE NO.	608930		

LIGHTING PLANS - 14 OF 15

608930_HDS(CONSTRUCTION PLANS)_LIGHTING_FINAL_120.DWG Plotted on 4-Sep-2024 2:38 PM

N

CONTINUED ON SHEET NO. 94

CONTINUED ON SHEET NO. 96

CURRANT HILL ROAD
(PUBLIC)

LA-84 LCC-4, CKT# LP-4
LA-85 LCC-4, CKT# LP-3
LA-86 LCC-4, CKT# LP-4
LA-87 LCC-4, CKT# LP-3
LA-88 LCC-4, CKT# LP-4
LA-89 LCC-4, CKT# LP-3
LA-90 LCC-4, CKT# LP-4
LA-91 LCC-4, CKT# LP-3
LA-95 LCC-4, CKT# LP-6
LA-96 LCC-4, CKT# LP-5
LA-97 LCC-4, CKT# LP-6
LA-98 LCC-4, CKT# LP-5
LA-99 LCC-4, CKT# LP-6
LA-100 LCC-4, CKT# LP-5
LA-101 LCC-4, CKT# LP-6
LA-102 LCC-4, CKT# LP-5
LA-103 LCC-4, CKT# LP-6
LA-104 LCC-4, CKT# LP-5

HH1

2"C, FROM EXIST LCC-4 4#2(CKTS LP-5 & LP-6) 1#6 GND

2"C, FROM EXIST LCC-4 4#2(CKTS LP-3 & LP-4) 1#6 GND

2"C, 2#10, 1#10 GND FROM PULLBOX TO LIGHT POLE (TYP)

N/F
MASSACHUSETTS BAY TRANSPORTATION AUTHORITY
BK/PG 1299/162
MERRIMACK STREET
212-2

N/F
THE CITY OF LAWRENCE
BK/PG 11232/152
85A MANCHESTER ST
PL 15922
212-3-2

LIMIT OF RESOURCE AREA AS FLAGGED BY NOVER ARMSTRONG ON MARCH 10, 2017. (TYP.)

25-FT RIVERFRONT AREA

#2.105 #2.104 #2.103 #2.106

#B7.110 #B7.109 #B7.108 #B7.107 #B7.106

TREELINE(TYP.)
GRAVEL PATH
CONC RET WALL
WOOD RETAINING WALL
CONC RETAINING WALL
6' CLF
UPL 8025
UPL 8026
LPL
GUY
5"STEEL FIBER-AT&T
1-1/4"HDPE FIBER-VZ(MCI)
CONC

0 20 50 100
SCALE: 1" = 20'

LAWRENCE
LMRC RAIL TRAIL

STATE	FED. AID PROJ. NO.	SHEET NO.	TOTAL SHEETS
MA	CMQ-003S(733)X	96	245
PROJECT FILE NO.	608930		

LIGHTING PLANS - 15 OF 15

608930_HDS(CONSTRUCTION PLANS)_LIGHTING_FINAL_120.DWG Plotted on 4-Sep-2024 2:38 PM

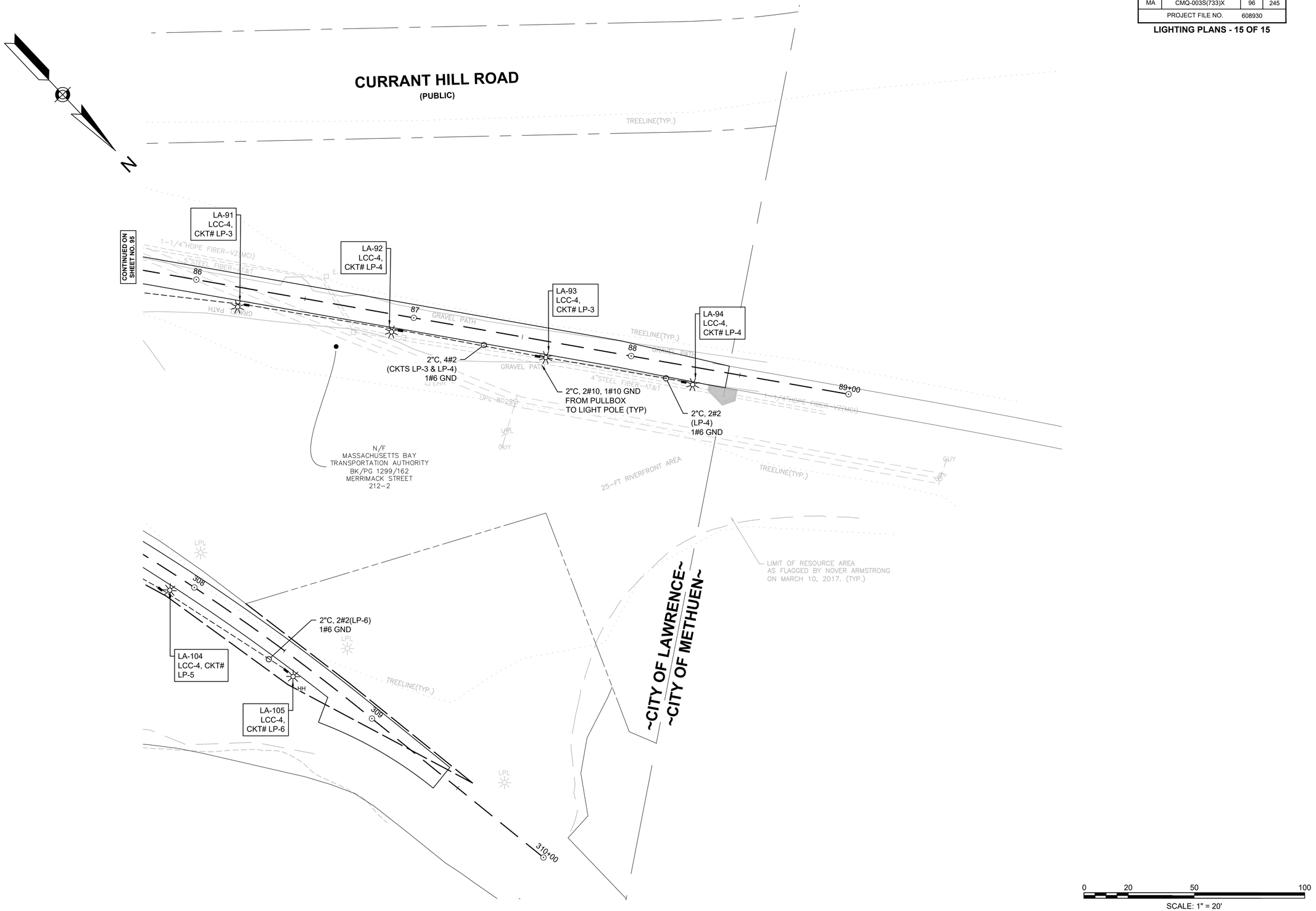

ELECTRICAL LEGEND

- PATH LIGHT POLE MOUNTED FIXTURE
- BRIDGE LIGHT COLUMN FIXTURE
- RELOCATED EXISTING FIXTURE
- 8" X 23" PULLBOX SD2.030 (AT EVERY POLE)
- HH1 — 24" X 13" HANDHOLE SD2.022 (AT JUNCTION POINTS)
- HH2 — 36" X 36" HANDHOLE SD2.024
- CONTROL CABINET
- JUNCTION BOX
- CONDUIT ROADWAY CROSSING

GENERAL NOTES

1. DRAWINGS ARE DIAGRAMMATIC AND INDICATE THE GENERAL ARRANGEMENT OF WORK. BASIC DESIGN CONCEPTS INDICATED ARE TO BE EITHER FOLLOWED OR BETTERED. WORK IS INTENDED TO INCLUDE ALL ITEMS NECESSARY FOR PROPER OPERATION AND COMPLETION. FIELD VERIFY ALL LOCATIONS, ELEVATIONS, AND DIMENSIONS.
2. EXECUTE ALL WORK IN A NEAT WORKINGMAN MANNER IN CONFORMANCE WITH THE BEST MODERN TRADE PRACTICES, BY COMPETENT, EXPERIENCED MECHANICS, PRESENTING A NEAT APPEARANCE WHEN COMPLETED. REPLACE WORK NOT APPROVED BY OWNER WITHOUT ADDITIONAL CHARGE.
3. AS THERE MAY BE VARIOUS CONDITIONS AT THE SITE WHICH DO NOT SHOW ON THE ACCOMPANYING DRAWINGS, OR WHICH ARE AT THE VARIANCE WITH THE CONDITIONS INDICATED ON THE DRAWINGS, IT IS IMPORTANT THAT EACH BIDDER VISIT THE SITE AND ACQUAINT HIMSELF WITH EXISTING CONDITIONS AND TAKE THESE CONDITIONS INTO CONSIDERATION WHEN PREPARING HIS BID. EACH BIDDER SHALL OBTAIN INFORMATION OR MAKE ANY MEASUREMENT DESIRED. LACK OF KNOWLEDGE RELATIVE TO THE EXISTING SITE CONDITIONS WILL NOT BE ALLOWED S A BASIS OF EXTRA COMPENSATIONS.

CONSTRUCTION NOTES

1. WHERE CONDUIT IS TO BE INSTALLED UNDER EXISTING PAVED WALKWAY, PAVEMENT SHALL BE CUT AND PATCHED.
2. LOCATION OF PROPOSED ELECTRICAL SERVICES ARE INTENDED TO NOT DISTURB ROOT SYSTEM OF EXISTING TREES OR SHRUBS. CONTRACTOR SHALL EXERCISE DUE CARE TO PREVENT DAMAGE THERETO. ALL GRASS AREAS DISTURBED SHALL BE RESTORED TO ROUGH GRADE, TOPSOIL AND GRASS SEEDING. CONTRACTOR IS RESPONSIBLE FOR THE REMOVAL, CARE AND REPLANTING OF ALL PLANTINGS AND SHRUBS DISTURBED DURING CONSTRUCTION.
3. ALL EXISTING OVERHEAD UTILITIES ARE SHOWN USING THE BEST AVAILABLE RECORD PLAN INFORMATION. EXPLORATORY EXCAVATION BY CONTRACTOR SHALL BE PERFORMED AT ALL POTENTIAL UTILITY CONFLICTS TO LOCATE EXISTING UTILITIES, PRIOR TO INSTALLATION OF UNDERGROUND CONDUITS, DUCTBANKS AND BASES. CONTRACTOR IS RESPONSIBLE FOR PROTECTION OF ALL UTILITIES WHETHER OR NOT THEY ARE SHOWN ON THE PLANS. ALL REPAIRS TO DAMAGED UTILITIES SHALL BE MADE BY THE THE CONTRACTOR USING MATERIALS APPROVED BY THE ENGINEER AT NO ADDITIONAL COST TO THE OWNER.
4. CONTRACTOR TO CONTACT DIG SAFE, PRIOR TO COMMENCING WORK. CONTRACTOR SHALL VERIFY LOCATION OF ALL OVERHEAD AND UNDERGROUND ELECTRIC AND TELEPHONE LINES AND TAKE NECESSARY PRECAUTIONS IN STRICT ACCORDANCE WITH OSHA STANDARDS DURING CONSTRUCTION. CONTRACTOR SHALL CONTACT LOCAL ELECTRICAL, CABLE AND TELEPHONE UTILITIES REGARDING ANY NECESSARY SUPPORT OF ANY UTILITY POLES DURING CONSTRUCTION. CONTRACTOR IS RESPONSIBLE FOR THE SUPPORT OF TEMPORARY RELOCATION OF ALL UTILITY POLES AFFECTED BY THE CONSTRUCTION.

LAWRENCE
LMRC RAIL TRAIL

STATE	FED. AID PROJ. NO.	SHEET NO.	TOTAL SHEETS
MA	CMQ-003S(733)X	97	245
PROJECT FILE NO.	608930		

LIGHTING DETAILS - 1 OF 4

LUMINAIRE SCHEDULE

LUMNAIRE	MANUFACTURER	CATALOG NUMBER	DESCRIPTION	LUMENS PER LAMP	WATTAGE	DISTRIBUTION TYPE	BUG / LPW	POLE	POLE BASE	NOTES
☼	STERNBERG	1A SL730 24L40T3 MDL014 SV1	POLE MOUNTED LED FIXTURE	7011	88.5	III	B2-U0-G1 / 79	VALMONT 18' STEEL W/25' BEND RADIUS	SD3.010 SEE NOTE 2	1. LPW IMPACTED BY ANTI-GLARE SHIELD OVER THE LEDS 2. ANCHOR BOLTS SIZED PER MANUFACTURER'S RECOMMENDATION
✦	HESS	MSC300M-F 16 30K DIM RGBW40K DMX-RDM GG	LED LIGHT COLUMN	-	37	-			BRIDGE MOUNTED	1. DMX CONTROL WIRING FROM CONTROL BOX

608930_HDS\CONSTRUCTION PLANS_LIGHTING_DETAILS_FINAL_120.DWG Plotted on 4-Sep-2024 2:39 PM

LAWRENCE
LMRC RAIL TRAIL

STATE	FED. AID PROJ. NO.	SHEET NO.	TOTAL SHEETS
MA	CMQ-003S(733)X	98	245
PROJECT FILE NO.	608930		

LIGHTING DETAILS - 2 OF 4

608930_HDS(CONSTRUCTION PLANS)_LIGHTING_DETAILS_FINAL_120.DWG Plotted on 4-Sep-2024 5:14 PM

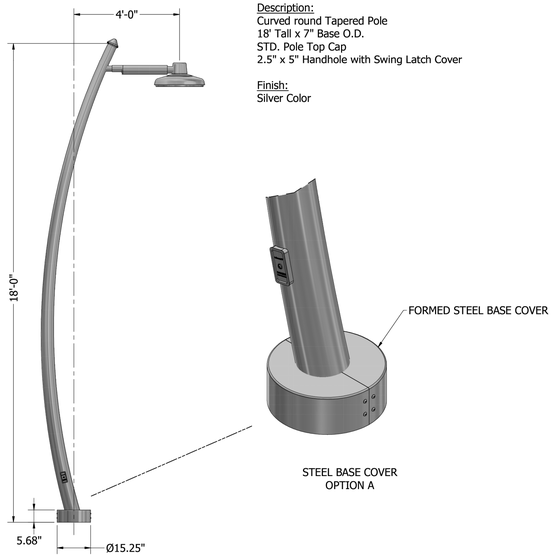

Description:
Curved round Tapered Pole
18' Tall x 7" Base O.D.
STD. Pole Top Cap
2.5" x 5" Handhole with Swing Latch Cover

Finish:
Silver Color

STEEL BASE COVER
OPTION A

WALKWAY LIGHTING DETAIL
NOT TO SCALE

DESCRIPTION

MOSAIC MONTAGE enhances exterior spaces with dynamic colors while providing subtle striation-free ambient illumination with white LEDs. The column body is illuminated from within by a secondary luminaire with dynamic light sources in RGBW or tunable white to create colorful scenes and effects or static white for an understated appearance. Fabricated from high-quality aluminum extrusions with a choice of five precisely cut panel designs, the column delivers a sophisticated presentation as an architectural element. Finish may be finely textured matte silver grey metallic, dark grey, graphite grey, or black. Special RAL colors and premium anodized finishes available on request. Consult factory for custom panel designs. All hardware is stainless steel. CSA Certified for Wet Locations.

PROTECTED BY PRIMAR®

Date: _____ Type: _____ Catalog Number: _____

Project Name: _____

ORDERING INFORMATION

LUMINAIRE							
MODEL	TOP MODULE	LOWER MODULE	VOLT	POLE	FINISH	PREMIUM FINISH	OPTION
MSC300M-F Fracture	WW- 3000K	WW- 3000K	UNV- 120-277v	12AS- 12' Aluminum Square	SG - Silver Grey	SA - Satin Anodized	DIM- 0-10v dimming for Top Module *
	NW- 4000K	NW- 4000K		14AS- 14' Aluminum Square	DG - Dark Grey	BKA - Black Anodized	N- None
	WW/HP- 3000K High Output	DW- Dynamic White 2700K-6500K		16AS- 16' Aluminum Square	GG - Graphite Grey	BZA - Bronze Anodized	
	NW/HP- 4000K High Output	RGBW- RGBW (4000K White)			MB - Matte Black		
					DB - Dark Bronze		
					CC - Custom RAL Color		
					*Make only one Finish selection total within this box		*(Contact factory for 0-10v DC dimming options of secondary column luminaire)

BRIDGE LIGHTING FIXTURE
NOT TO SCALE

REFER TO ANCHORING DETAIL ON BRIDGE / LANDSCAPE PLANS

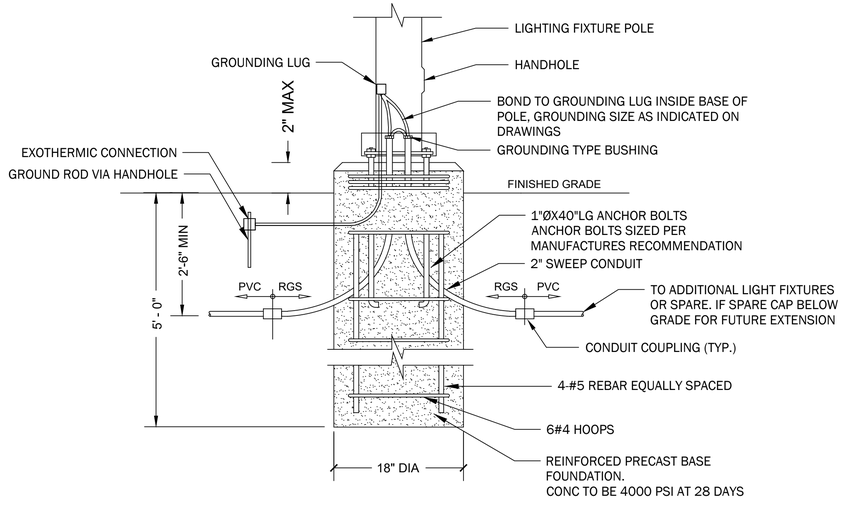

PATH LIGHT POLE BASE DETAIL SD3.010
NOT TO SCALE

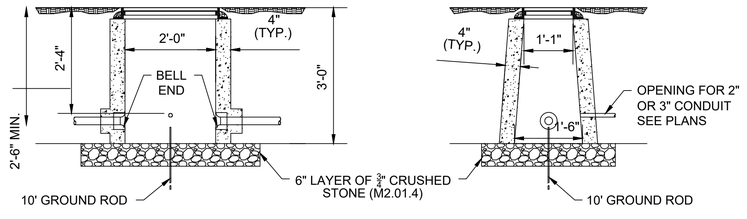

SECTIONS THROUGH ELECTRIC HANDHOLE (SD2.022)
NOT TO SCALE

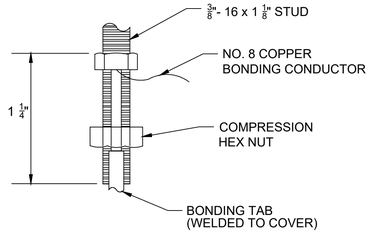

BONDING LUG
NOT TO SCALE

NOTES:

1. BONDING POST CONNECTOR SHALL BE LONG STUD TYPE WHICH WILL ACCOMMODATE A DOUBLE CONDUCTOR INSTALLATION.
2. ATTACH 3 FOOT LENGTH OF NO. 8 COPPER BONDING CONDUCTOR FROM BONDING POST CONNECTOR INSTALLED ON COVER TO BONDING POST CONNECTOR INSTALLED ON FRAME.
3. ATTACH FREE END OF BONDING CONDUCTOR ROUTED THROUGH CONDUIT SYSTEM TO BONDING POST CONNECTOR INSTALLED IN THE FRAME.
4. LUG SHALL BE EITHER COPPER OR BRASS.

LAWRENCE
LMRC RAIL TRAIL

STATE	FED. AID PROJ. NO.	SHEET NO.	TOTAL SHEETS
MA	CMQ-003S(733)X	99	245
PROJECT FILE NO.	608930		

LIGHTING DETAILS - 3 OF 4

608930_HDS(CONSTRUCTION PLANS)_LIGHTING_DETAILS_FINAL_120.DWG Plotted on 4-Sep-2024 2:39 PM

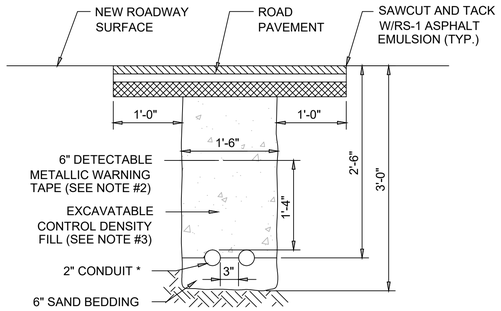

* = UNLESS OTHERWISE NOTED ON PLANS

NOTES:

1. SCHEDULE 80 ELECTRICAL CONDUIT TYPE NM-PLASTIC (UL) WITH PULL ROPE.
2. WARNING TAPE SHALL BE PER CURRENT APWA STANDARDS.
3. CONTROL DENSITY FILL SHALL MEET THE REQUIREMENTS OF SUBSECTION M4.08.0 AND SHALL BE USED WHEN CROSSING EXISTING PAVEMENT.
4. SERVICE CONNECTION TO LIGHTING CONTROL BOX SHALL BE PER NGRID STANDARDS AND SPECIFICATIONS.

TRENCH DETAIL (ASPHALT)
NOT TO SCALE

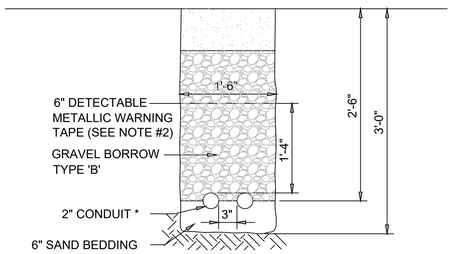

* = UNLESS OTHERWISE NOTED ON PLANS
** = BACKFILL DEEMED SUITABLE CAN BE USED AS BACKFILL WITH THE APPROVAL OF THE ENGINEER

NOTES:

1. SCHEDULE 80 ELECTRICAL CONDUIT TYPE NM-PLASTIC (UL) WITH PULL ROPE.
2. WARNING TAPE SHALL BE PER CURRENT APWA STANDARDS.

TRENCH DETAIL (CONCRETE SIDEWALK)
NOT TO SCALE

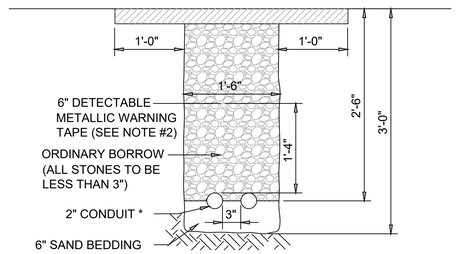

* = UNLESS OTHERWISE NOTED ON PLANS

NOTES:

1. SCHEDULE 80 ELECTRICAL CONDUIT TYPE NM-PLASTIC (UL) WITH PULL ROPE.
2. WARNING TAPE SHALL BE PER CURRENT APWA STANDARDS.

TRENCH DETAIL (GRASS)
NOT TO SCALE

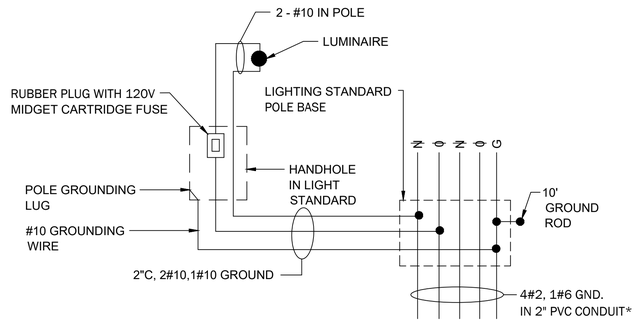

* = UNLESS OTHERWISE NOTED ON PLANS

WIRING DIAGRAM FOR PATHWAY LUMINAIRE
NOT TO SCALE

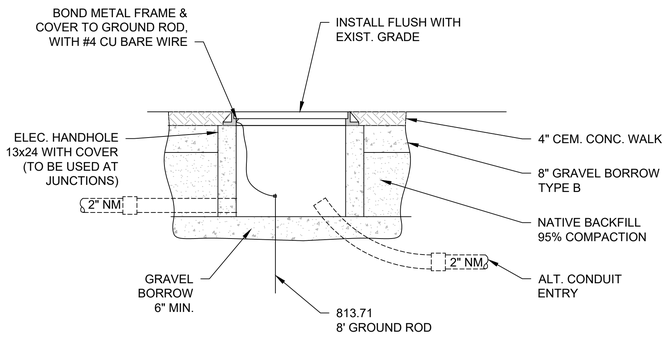

NOTES:

1. HANDHOLE ORIENTATION TO BE SUCH THAT ALL SUPPLY DUCTS ENTER ON SAME SHORT SIDE.
2. SIZE AND NUMBER OF CONDUITS AS REQUIRED.
3. CONDUIT LOCATIONS SHOWN ARE TYPICAL.
4. CEMENT SIDEWALK SHOWN. FOR OTHER SURFACE TREATMENTS, SEE CONSTRUCTION DETAILS SHEET.

HANDHOLE INSTALLATION DETAIL
NOT TO SCALE

LAWRENCE
LMRC RAIL TRAIL

STATE	FED. AID PROJ. NO.	SHEET NO.	TOTAL SHEETS
MA	CMQ-003S(733)X	100	245
PROJECT FILE NO.	608930		

LIGHTING DETAILS - 4 OF 4

608930_HDS(CONSTRUCTION PLANS)_LIGHTING_DETAILS_FINAL_120.DWG Plotted on 4-Sep-2024 2:39 PM

MERRIMACK STREET LCC-1 PANELBOARD 'LP' SCHEDULE - 100A, 120/240, 1Ø, 24 POLE										
	CIRCUIT BREAKER					WIRE SIZE				
CIRCUIT NUMBER	FRAME SIZE AMPS	TRIP SETTING	I C AMPS	POLES	VOLTAGE	NO.	WIRE SIZE	GROUND WIRE	NAME PLATE INSCRIPTION	REMARKS
1	100	20	10KAIC	1	120	2	12	12	CABINET EXHAUST FAN	
2	100	20	10KAIC	2	240	2	10	12	CABINET HEATER	
3	100	20	10KAIC	1	120	2	12	12	PHOTOCELL	
4	100	20	10KAIC	1	120	2	12	12	CABINET LIGHT AND RECP	
5	100	20	10KAIC	1	120	2	2	6	PATH LIGHTING	
6	100	20	10KAIC	1	120	2	2	6	BRIDGE LIGHTING	
7	100	20	10KAIC	1	120	2	10	12	DMX CABINET FAN AND HEATER	
8	100	20	10KAIC	1	120	2	10	12	DMX CABINET EQUIPMENT	
9	100	20	10KAIC	1	120	2	10	12	DMX CABINET RECEPTACLE	
10	100	20	10KAIC	1	120	2	10	12	DMX CABINET SPARE	
12	100	20	10KAIC	1	120				SPARE	
14	100	20	10KAIC	1	120				SPARE	

WATER STREET LCC-2 PNLBD 'LP' SCHEDULE - 100A, 120/240, 1Ø, 24 POLE										
	CIRCUIT BREAKER					WIRE SIZE				
CIRCUIT NUMBER	FRAME SIZE AMPS	TRIP SETTING	I C AMPS	POLES	VOLTAGE	NO.	WIRE SIZE	GROUND WIRE	NAME PLATE INSCRIPTION	REMARKS
1	100	20	10KAIC	1	120	2	12	12	CABINET EXHAUST FAN	
2	100	20	10KAIC	2	240	2	10	12	CABINET HEATER	
3	100	20	10KAIC	1	120	2	12	12	PHOTOCELL	
4	100	20	10KAIC	1	120	2	12	12	CABINET LIGHT AND RECP	
5	100	20	10KAIC	1	120	2	2	6	SPARE	
6	100	20	10KAIC	1	120	2	2	6	PATH LIGHTING	
7	100	20	10KAIC	1	120	2	2	6	PATH LIGHTING	
8	100	20	10KAIC	1	120	2	2	6	SPARE	
9	100	20	10KAIC	1	120	2	2	6	SPARE	
10	100	20	10KAIC	1	120	2	2	6	SPARE	

HAVERHILL LCC-3 PANELBOARD 'LP' SCHEDULE - 100A, 120/240, 1Ø, 24 POLE										
	CIRCUIT BREAKER					WIRE SIZE				
CIRCUIT NUMBER	FRAME SIZE AMPS	TRIP SETTING	I C AMPS	POLES	VOLTAGE	NO.	WIRE SIZE	GROUND WIRE	NAME PLATE INSCRIPTION	REMARKS
1	100	20	10KAIC	1	120	2	12	12	CABINET EXHAUST FAN	
2	100	20	10KAIC	2	240	2	10	12	CABINET HEATER	
3	100	20	10KAIC	1	120	2	12	12	PHOTOCELL	
4	100	20	10KAIC	1	120	2	12	12	CABINET LIGHT AND RECP	
5	100	20	10KAIC	1	120	2	2	6	PATH LIGHTING	
6	100	20	10KAIC	1	120	2	2	6	PATH LIGHTING	
7	100	20	10KAIC	1	120	2	2	6	PATH LIGHTING	LCC-2 ONLY
8	100	20	10KAIC	1	120	2	2	6	PATH LIGHTING	LCC-2 ONLY
9	100	20	10KAIC	1	120	2	2	6	PATH LIGHTING	LCC-2 ONLY
10	100	20	10KAIC	1	120	2	2	6	PATH LIGHTING	LCC-2 ONLY

EXISTING PANELBOARD IN CABINET LCC-4										
	CIRCUIT BREAKER					WIRE SIZE				
CIRCUIT NUMBER	FRAME SIZE AMPS	TRIP SETTING	I C AMPS	POLES	VOLTAGE	NO.	WIRE SIZE	GROUND WIRE	NAME PLATE INSCRIPTION	REMARKS
1	100	20	10KAIC	1	120	2	2	6	PATH LIGHTING	
2	100	20	10KAIC	1	120	2	2	6	PATH LIGHTING	
3	100	20	10KAIC	1	120	2	2	6	PATH LIGHTING	
4	100	20	10KAIC	1	120	2	2	6	PATH LIGHTING	
5	100	20	10KAIC	1	120	2	2	6	PATH LIGHTING	
6	100	20	10KAIC	1	120	2	2	6	PATH LIGHTING	
7	-	-	-	-	-	-	-	-	EXISTING CKT	
8	-	-	-	-	-	-	-	-	EXISTING CKT	
8	-	-	-	-	-	-	-	-	EXISTING CKT	
9	-	-	-	-	-	-	-	-	EXISTING CKT	

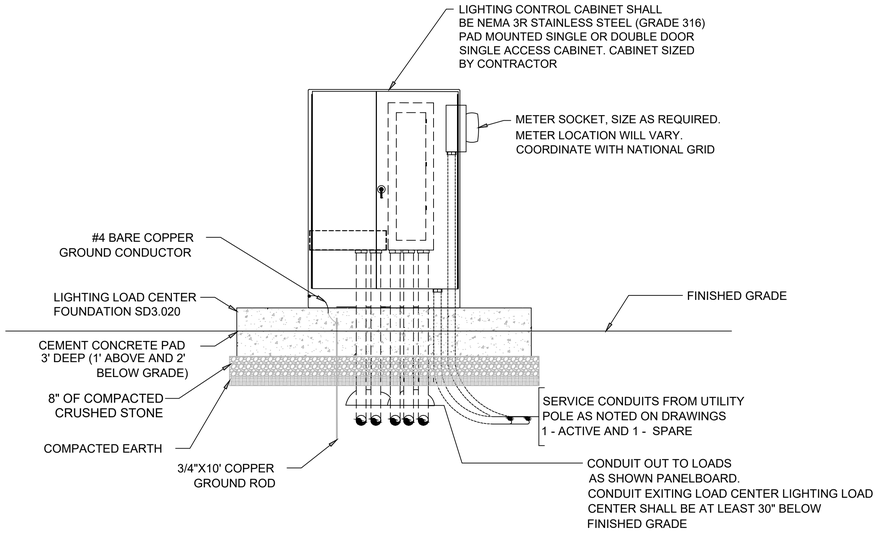

HIGHWAY LIGHTING LOAD CENTER EXTERIOR
TYPICAL FOR LCC1- & LCC-2 & LCC-3

NOT TO SCALE

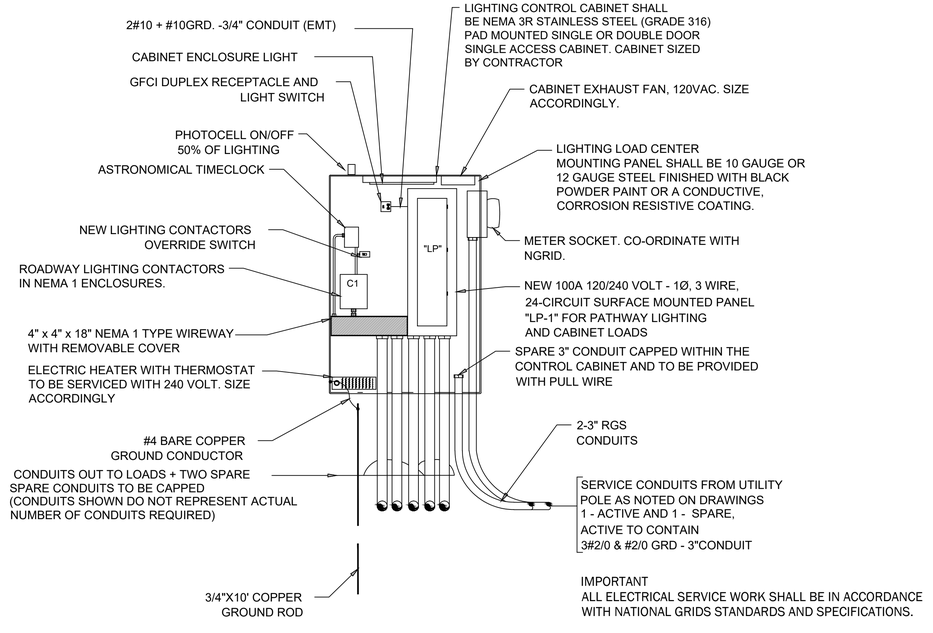

HIGHWAY LIGHTING LOAD CENTER INTERIOR
TYPICAL FOR LCC1- & LCC-2 & LCC-3

NOT TO SCALE

LIMIT OF WORK

TEMPORARY EASEMENT LINE

PERMANENT EASEMENT LINE

SEED MIX LEGEND

SEEDING TURF/LAWN MIX
M6.03-1, ITEM 765.11
SOIL DEPTH: 4"

SHORT GRASSLAND MIX,
ITEM 765.411
SOIL DEPTH: 4"

LOW GROWING SHOWY UPLAND MIX, ITEM 765.414;
SOIL DEPTH: 4" FOR FUTURE PLANTING

URBAN RAIN GARDEN MIX (DRAINAGE SWALE, BIO RETENTION BASIN, AND INFILTRATION BASIN)
ITEM 765.554;

WETLAND SEED MIX, WETLAND SPECIALIST TO DETERMINE FINAL SEED MIX; ITEM 765.551 OR 765.552.

SITE IMPROVEMENT LEGEND

S1 TRAIL SIGN; SEE DETAIL 1/LD6

S2 BRIDGE RAIL TRAIL SIGN; SEE DETAIL 2/LD6

S3 PROP HMA CURB - TYPE 2; SEE CONSTRUCTION PLANS

S4 GRAVEL MAINTENANCE STRIP; SEE DETAIL 13/LD3

S5 TRAIL PATH LIGHT; SEE DETAIL 2/LD8

S6 BRIDGE DECORATIVE COLUMN LIGHT; SEE DETAIL 1/LD8

S7 STACKED TIMBER SEATING STRUCTURE; SEE DETAIL 5/LD7

S8 TIMBER BENCH; SEE DETAIL 4/LD7

S9 NOT USED

S10 SPECIAL CONCRETE SEAT WALL WITH TIMBER SEAT; SEE SHEET LD4

S11 GAMING TABLE AND CHAIRS (FIXED); SEE DETAIL 2/LD7

S12 TABLE AND CHAIRS (FIXED); SEE DETAIL 1/LD7

S13 BICYCLE RACK; SEE DETAIL 3/LD8

S14 TRASH RECEPTACLE; SEE DETAIL 4/LD8

S15 PROP BRIDGE RAIL; SEE CONSTRUCTION PLANS

S16 6 FT CHAIN LINK FENCE; SEE PROVISIONS

S17 VERTICAL WELDED WIRE SCREEN FENCE; SEE SHEET LD5

S18 WOOD FENCE; SEE CONSTRUCTION PLANS

S19 PROP WOODEN SAFETY RAIL; SEE CONSTRUCTION PLANS

S20 WOOD RAIL FENCE WITH GUARDRAIL; SEE CONSTRUCTION PLANS

S21 BENCH COMPANION SEATING; SEE ADA REQUIREMENTS

LAWRENCE
LMRC RAIL TRAIL

STATE	FED. AID PROJ. NO.	SHEET NO.	TOTAL SHEETS
MA	CMQ-003S(733)X	101	245
PROJECT FILE NO.	608930		

LANDSCAPE PLANS - 1 OF 15

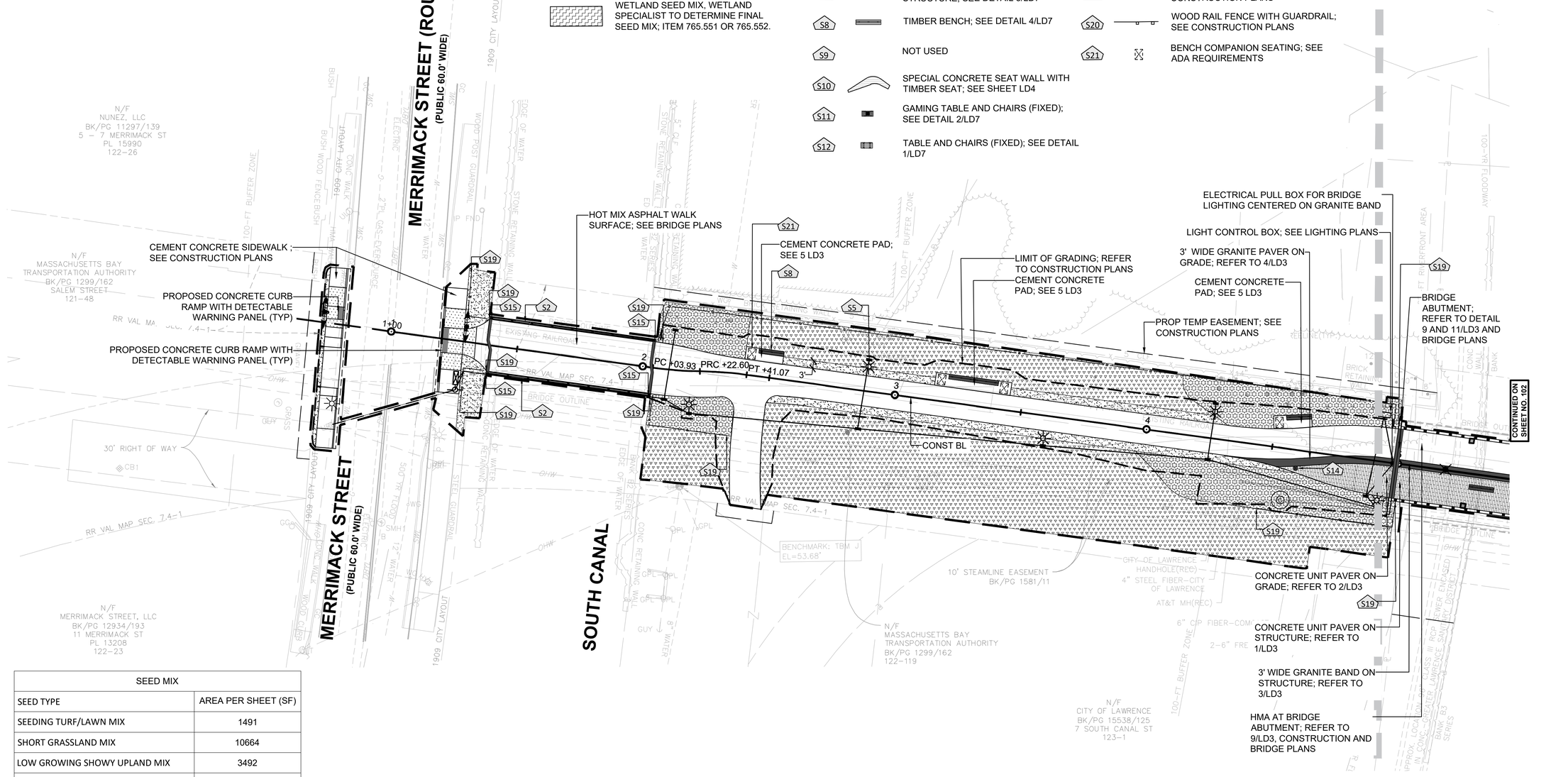

SEED MIX	
SEED TYPE	AREA PER SHEET (SF)
SEEDING TURF/LAWN MIX	1491
SHORT GRASSLAND MIX	10664
LOW GROWING SHOWY UPLAND MIX	3492
URBAN RAIN GARDEN MIX	0
WETLAND SEED MIX	0

0 20 50 100

SCALE: 1" = 20'

_LP1 SOUTH CANAL PLAN.DWG Plotted on 6-Sep-2024 9:52 AM

LIMIT OF WORK
TEMPORARY EASEMENT LINE
PERMANENT EASEMENT LINE

SEED MIX LEGEND

- SEEDING TURF/LAWN MIX M6.03-1, ITEM 765.11 SOIL DEPTH: 4"
- SHORT GRASSLAND MIX, ITEM 765.411 SOIL DEPTH: 4"
- LOW GROWING SHOWY UPLAND MIX, ITEM 765.414; SOIL DEPTH: 4" FOR FUTURE PLANTING
- URBAN RAIN GARDEN MIX (DRAINAGE SWALE, BIO RETENTION BASIN, AND INFILTRATION BASIN) ITEM 765.554;
- WETLAND SEED MIX, WETLAND SPECIALIST TO DETERMINE FINAL SEED MIX; ITEM 765.551 OR 765.552.

SITE IMPROVEMENT LEGEND

- S1 TRAIL SIGN; SEE DETAIL 1/LD6
- S2 BRIDGE RAIL TRAIL SIGN; SEE DETAIL 2/LD6
- S3 PROP HMA CURB - TYPE 2; SEE CONSTRUCTION PLANS
- S4 GRAVEL MAINTENANCE STRIP; SEE DETAIL 13/LD3
- S5 TRAIL PATH LIGHT; SEE DETAIL 2/LD8
- S6 BRIDGE DECORATIVE COLUMN LIGHT; SEE DETAIL 1/LD8
- S7 STACKED TIMBER SEATING STRUCTURE; SEE DETAIL 5/LD7
- S8 TIMBER BENCH; SEE DETAIL 4/LD7
- S9 NOT USED
- S10 SPECIAL CONCRETE SEAT WALL WITH TIMBER SEAT; SEE SHEET LD4
- S11 GAMING TABLE AND CHAIRS (FIXED); SEE DETAIL 2/LD7
- S12 TABLE AND CHAIRS (FIXED); SEE DETAIL 1/LD7
- S13 BICYCLE RACK; SEE DETAIL 3/LD8
- S14 TRASH RECEPTACLE; SEE DETAIL 4/LD8
- S15 PROP BRIDGE RAIL; SEE CONSTRUCTION PLANS
- S16 6 FT CHAIN LINK FENCE; SEE PROVISIONS
- S17 VERTICAL WELDED WIRE SCREEN FENCE; SEE SHEET LD5
- S18 WOOD FENCE; SEE CONSTRUCTION PLANS
- S19 PROP WOODEN SAFETY RAIL; SEE CONSTRUCTION PLANS
- S20 WOOD RAIL FENCE WITH GUARDRAIL; SEE CONSTRUCTION PLANS
- S21 BENCH COMPANION SEATING; SEE ADA REQUIREMENTS

LAWRENCE
LMRC RAIL TRAIL

STATE	FED. AID PROJ. NO.	SHEET NO.	TOTAL SHEETS
MA	CMQ-003S(733)X	102	245
PROJECT FILE NO.	608930		

LANDSCAPE PLANS - 2 OF 15

_LP2 MERRIMACK BRIDGE PLAN.DWG Plotted on 6-Sep-2024 9:53 AM

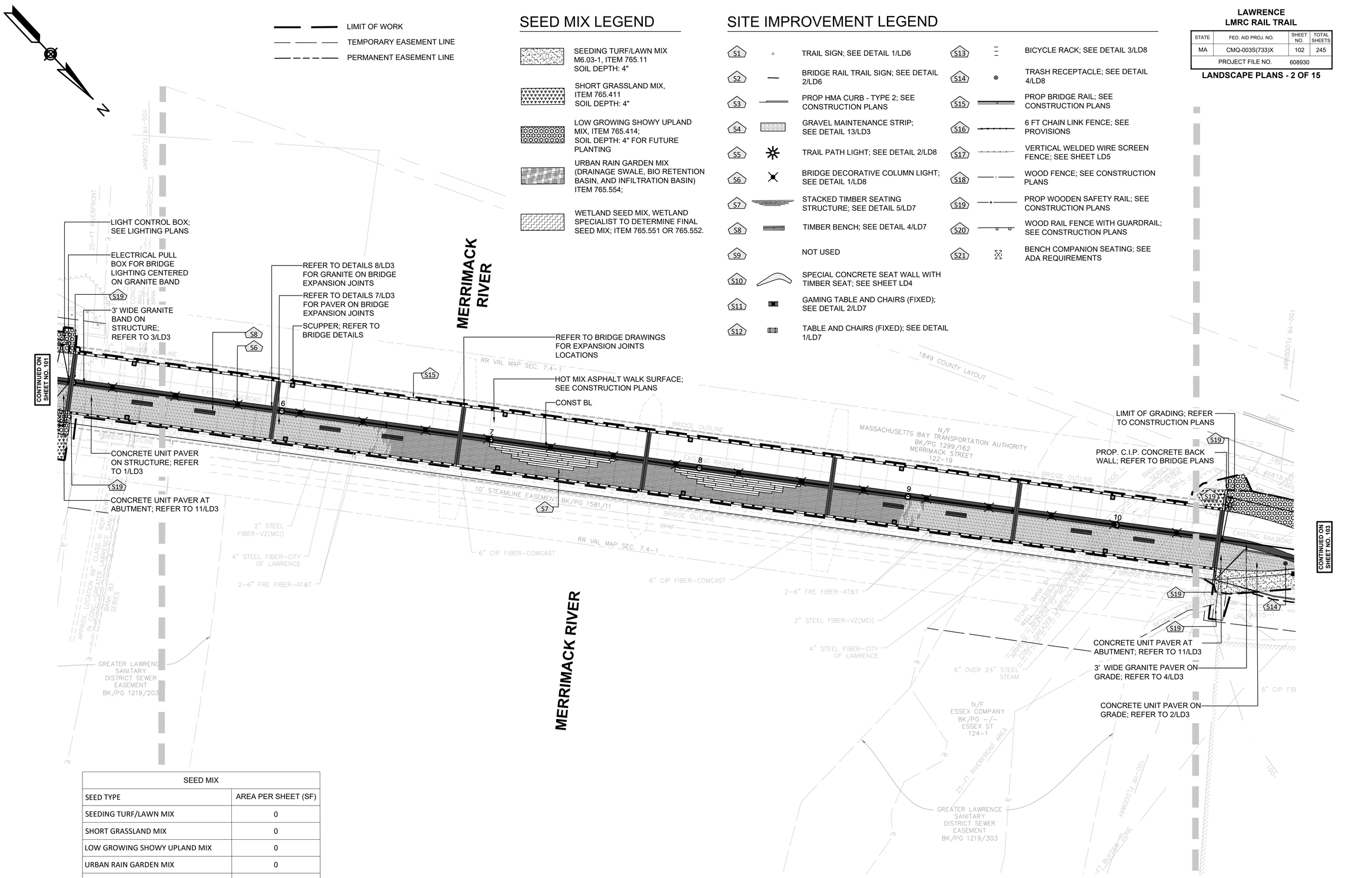

SEED MIX	
SEED TYPE	AREA PER SHEET (SF)
SEEDING TURF/LAWN MIX	0
SHORT GRASSLAND MIX	0
LOW GROWING SHOWY UPLAND MIX	0
URBAN RAIN GARDEN MIX	0
WETLAND SEED MIX	0

LIMIT OF WORK
TEMPORARY EASEMENT LINE
PERMANENT EASEMENT LINE

SEED MIX LEGEND

- SEEDING TURF/LAWN MIX M6.03-1, ITEM 765.11 SOIL DEPTH: 4"
- SHORT GRASSLAND MIX, ITEM 765.411 SOIL DEPTH: 4"
- LOW GROWING SHOWY UPLAND MIX, ITEM 765.414; SOIL DEPTH: 4" FOR FUTURE PLANTING
- URBAN RAIN GARDEN MIX (DRAINAGE SWALE, BIO RETENTION BASIN, AND INFILTRATION BASIN) ITEM 765.554;
- WETLAND SEED MIX, WETLAND SPECIALIST TO DETERMINE FINAL SEED MIX; ITEM 765.551 OR 765.552.

SITE IMPROVEMENT LEGEND

- S1 TRAIL SIGN; SEE DETAIL 1/LD6
- S2 BRIDGE RAIL TRAIL SIGN; SEE DETAIL 2/LD6
- S3 PROP HMA CURB - TYPE 2; SEE CONSTRUCTION PLANS
- S4 GRAVEL MAINTENANCE STRIP; SEE DETAIL 13/LD3
- S5 TRAIL PATH LIGHT; SEE DETAIL 2/LD8
- S6 BRIDGE DECORATIVE COLUMN LIGHT; SEE DETAIL 1/LD8
- S7 STACKED TIMBER SEATING STRUCTURE; SEE DETAIL 5/LD7
- S8 TIMBER BENCH; SEE DETAIL 4/LD7
- S9 NOT USED
- S10 SPECIAL CONCRETE SEAT WALL WITH TIMBER SEAT; SEE SHEET LD4
- S11 GAMING TABLE AND CHAIRS (FIXED); SEE DETAIL 2/LD7
- S12 TABLE AND CHAIRS (FIXED); SEE DETAIL 1/LD7
- S13 BICYCLE RACK; SEE DETAIL 3/LD8
- S14 TRASH RECEPTACLE; SEE DETAIL 4/LD8
- S15 PROP BRIDGE RAIL; SEE CONSTRUCTION PLANS
- S16 6 FT CHAIN LINK FENCE; SEE PROVISIONS
- S17 VERTICAL WELDED WIRE SCREEN FENCE; SEE SHEET LD5
- S18 WOOD FENCE; SEE CONSTRUCTION PLANS
- S19 PROP WOODEN SAFETY RAIL; SEE CONSTRUCTION PLANS
- S20 WOOD RAIL FENCE WITH GUARDRAIL; SEE CONSTRUCTION PLANS
- S21 BENCH COMPANION SEATING; SEE ADA REQUIREMENTS

LAWRENCE
LMRC RAIL TRAIL

STATE	FED. AID PROJ. NO.	SHEET NO.	TOTAL SHEETS
MA	CMQ-003S(733)X	103	245
PROJECT FILE NO.	608930		

LANDSCAPE PLANS - 3 OF 15

3' WIDE GRANITE BAND ON STRUCTURE; REFER TO 3/LD3
LIMIT OF GRADING; REFER TO CONSTRUCTION PLANS
PROP. C.I.P. CONCRETE BACK WALL; REFER TO BRIDGE PLANS
CONTINUED ON SHEET NO. 102
HOT MIX ASPHALT WALK SURFACE; SEE CONSTRUCTION PLANS
CONST BL
PROP. CEM CONCRETE; SEE CONSTRUCTION PLANS
3 FT WIDE GRANITE BAND ON GRADE; REFER TO 4/LD3
CONCRETE UNIT PAVER ON GRADE; REFER TO 2/LD3
BRIDGE ABUTMENT; REFER TO BRIDGE PLANS
CONCRETE UNIT PAVER ON STRUCTURE; REFER TO 1/LD3
PROP. GRANITE CURB; SEE CONSTRUCTION PLANS
PROP. CEM CONCRETE MEDIAN; SEE CONSTRUCTION PLANS
CONCRETE UNIT PAVER ON GRADE; REFER TO 2/LD3 AND REFER TO 6/LD3 FOR PAVING PATTERN
PROPOSED CONCRETE CURB RAMP WITH DETECTABLE WARNING PANEL (TYP)
CONTINUED ON SHEET NO. 104

BROADWAY - ROUTE 28 (PUBLIC)
CANAL STREET (PUBLIC - 50' WIDE)
NORTH CANAL

SEED MIX	
SEED TYPE	AREA PER SHEET (SF)
SEEDING TURF/LAWN MIX	2828
SHORT GRASSLAND MIX	0
LOW GROWING SHOWY UPLAND MIX	1319
URBAN RAIN GARDEN MIX	0
WETLAND SEED MIX	0

SCALE: 1" = 20'

_LP3 BROADWAY PLAN.DWG Plotted on 6-Sep-2024 9:54 AM

LIMIT OF WORK
TEMPORARY EASEMENT LINE
PERMANENT EASEMENT LINE

SEED MIX LEGEND

- SEEDING TURF/LAWN MIX M6.03-1, ITEM 765.11 SOIL DEPTH: 4"
- SHORT GRASSLAND MIX, ITEM 765.411 SOIL DEPTH: 4"
- LOW GROWING SHOWY UPLAND MIX, ITEM 765.414; SOIL DEPTH: 4" FOR FUTURE PLANTING
- URBAN RAIN GARDEN MIX (DRAINAGE SWALE, BIO RETENTION BASIN, AND INFILTRATION BASIN) ITEM 765.554;
- WETLAND SEED MIX, WETLAND SPECIALIST TO DETERMINE FINAL SEED MIX; ITEM 765.551 OR 765.552.

SITE IMPROVEMENT LEGEND

- S1 TRAIL SIGN; SEE DETAIL 1/LD6
- S2 BRIDGE RAIL TRAIL SIGN; SEE DETAIL 2/LD6
- S3 PROP HMA CURB - TYPE 2; SEE CONSTRUCTION PLANS
- S4 GRAVEL MAINTENANCE STRIP; SEE DETAIL 13/LD3
- S5 TRAIL PATH LIGHT; SEE DETAIL 2/LD8
- S6 BRIDGE DECORATIVE COLUMN LIGHT; SEE DETAIL 1/LD8
- S7 STACKED TIMBER SEATING STRUCTURE; SEE DETAIL 5/LD7
- S8 TIMBER BENCH; SEE DETAIL 4/LD7
- S9 NOT USED
- S10 SPECIAL CONCRETE SEAT WALL WITH TIMBER SEAT; SEE SHEET LD4
- S11 GAMING TABLE AND CHAIRS (FIXED); SEE DETAIL 2/LD7
- S12 TABLE AND CHAIRS (FIXED); SEE DETAIL 1/LD7
- S13 BICYCLE RACK; SEE DETAIL 3/LD8
- S14 TRASH RECEPTACLE; SEE DETAIL 4/LD8
- S15 PROP BRIDGE RAIL; SEE CONSTRUCTION PLANS
- S16 6 FT CHAIN LINK FENCE; SEE PROVISIONS
- S17 VERTICAL WELDED WIRE SCREEN FENCE; SEE SHEET LD5
- S18 WOOD FENCE; SEE CONSTRUCTION PLANS
- S19 PROP WOODEN SAFETY RAIL; SEE CONSTRUCTION PLANS
- S20 WOOD RAIL FENCE WITH GUARDRAIL SEE CONSTRUCTION PLANS
- S21 BENCH COMPANION SEATING; SEE ADA REQUIREMENTS

LAWRENCE
LMRC RAIL TRAIL

STATE	FED. AID PROJ. NO.	SHEET NO.	TOTAL SHEETS
MA	CMQ-003S(733)X	104	245
PROJECT FILE NO.	608930		

LANDSCAPE PLANS - 4 OF 15

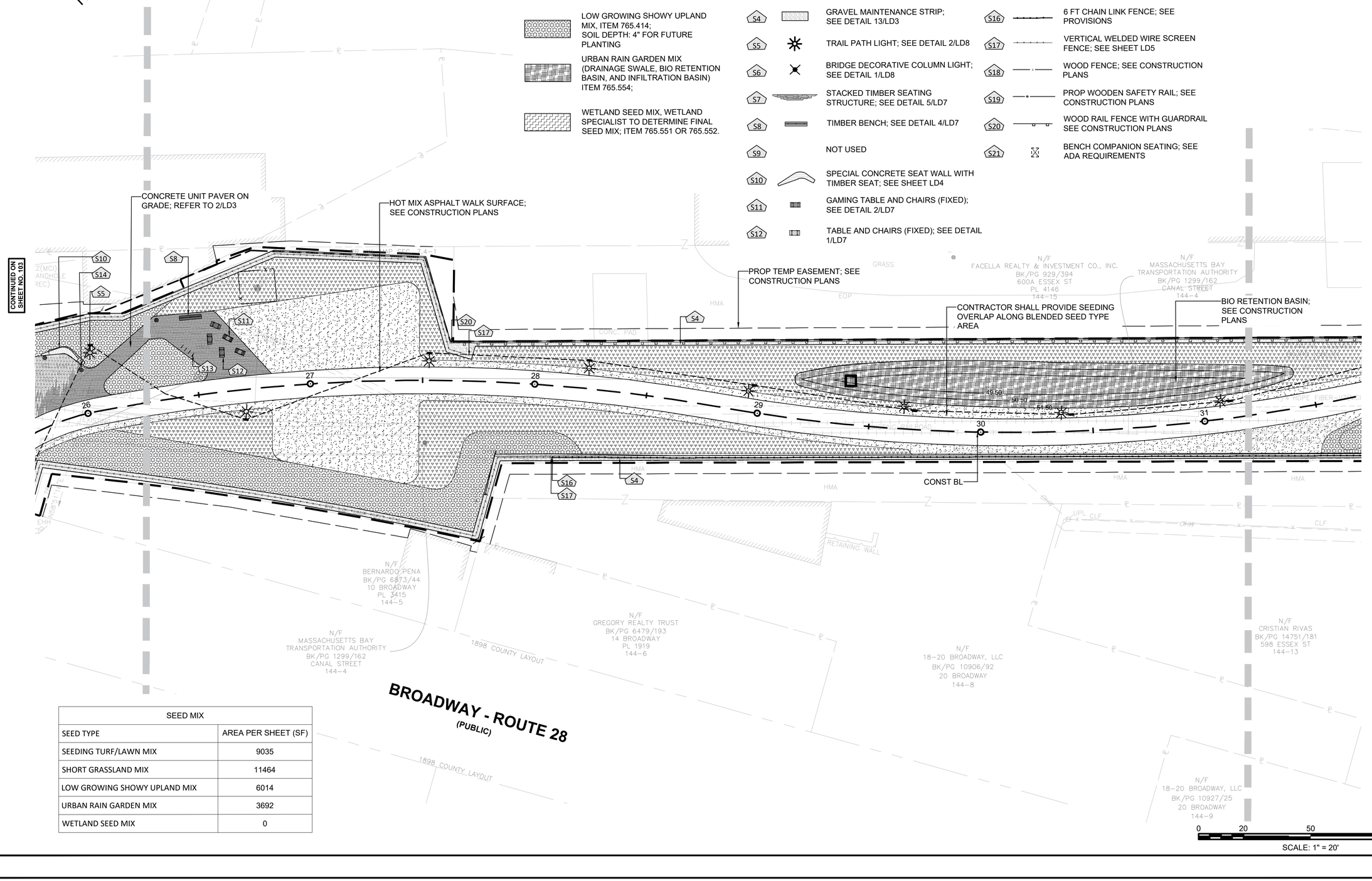

SEED MIX	
SEED TYPE	AREA PER SHEET (SF)
SEEDING TURF/LAWN MIX	9035
SHORT GRASSLAND MIX	11464
LOW GROWING SHOWY UPLAND MIX	6014
URBAN RAIN GARDEN MIX	3692
WETLAND SEED MIX	0

_LP4 WATER ST INTERSECTION PLAN.DWG Plotted on 6-Sep-2024 9:55 AM

LAWRENCE
LMRC RAIL TRAIL

STATE	FED. AID PROJ. NO.	SHEET NO.	TOTAL SHEETS
MA	CMQ-003S(733)X	105	245
	PROJECT FILE NO.	608930	

LANDSCAPE PLANS - 5 OF 15

LIMIT OF WORK
TEMPORARY EASEMENT LINE
PERMANENT EASEMENT LINE

SEED MIX LEGEND

- SEEDING TURF/LAWN MIX M6.03-1, ITEM 765.11 SOIL DEPTH: 4"
- SHORT GRASSLAND MIX, ITEM 765.411 SOIL DEPTH: 4"
- LOW GROWING SHOWY UPLAND MIX, ITEM 765.414; SOIL DEPTH: 4" FOR FUTURE PLANTING
- URBAN RAIN GARDEN MIX (DRAINAGE SWALE, BIO RETENTION BASIN, AND INFILTRATION BASIN) ITEM 765.554;
- WETLAND SEED MIX, WETLAND SPECIALIST TO DETERMINE FINAL SEED MIX; ITEM 765.551 OR 765.552.

SITE IMPROVEMENT LEGEND

- S1 TRAIL SIGN; SEE DETAIL 1/LD6
- S2 BRIDGE RAIL TRAIL SIGN; SEE DETAIL 2/LD6
- S3 PROP HMA CURB - TYPE 2; SEE CONSTRUCTION PLANS
- S4 GRAVEL MAINTENANCE STRIP; SEE DETAIL 13/LD3
- S5 TRAIL PATH LIGHT; SEE DETAIL 2/LD8
- S6 BRIDGE DECORATIVE COLUMN LIGHT; SEE DETAIL 1/LD8
- S7 STACKED TIMBER SEATING STRUCTURE; SEE DETAIL 5/LD7
- S8 TIMBER BENCH; SEE DETAIL 4/LD7
- S9 NOT USED
- S10 SPECIAL CONCRETE SEAT WALL WITH TIMBER SEAT; SEE SHEET LD4
- S11 GAMING TABLE AND CHAIRS (FIXED); SEE DETAIL 2/LD7
- S12 TABLE AND CHAIRS (FIXED); SEE DETAIL 1/LD7
- S13 BICYCLE RACK; SEE DETAIL 3/LD8
- S14 TRASH RECEPTACLE; SEE DETAIL 4/LD8
- S15 PROP BRIDGE RAIL; SEE CONSTRUCTION PLANS
- S16 6 FT CHAIN LINK FENCE; SEE PROVISIONS
- S17 VERTICAL WELDED WIRE SCREEN FENCE; SEE SHEET LD5
- S18 WOOD FENCE; SEE CONSTRUCTION PLANS
- S19 PROP WOODEN SAFETY RAIL; SEE CONSTRUCTION PLANS
- S20 WOOD RAIL FENCE WITH GUARDRAIL SEE CONSTRUCTION PLANS
- S21 BENCH COMPANION SEATING; SEE ADA REQUIREMENTS

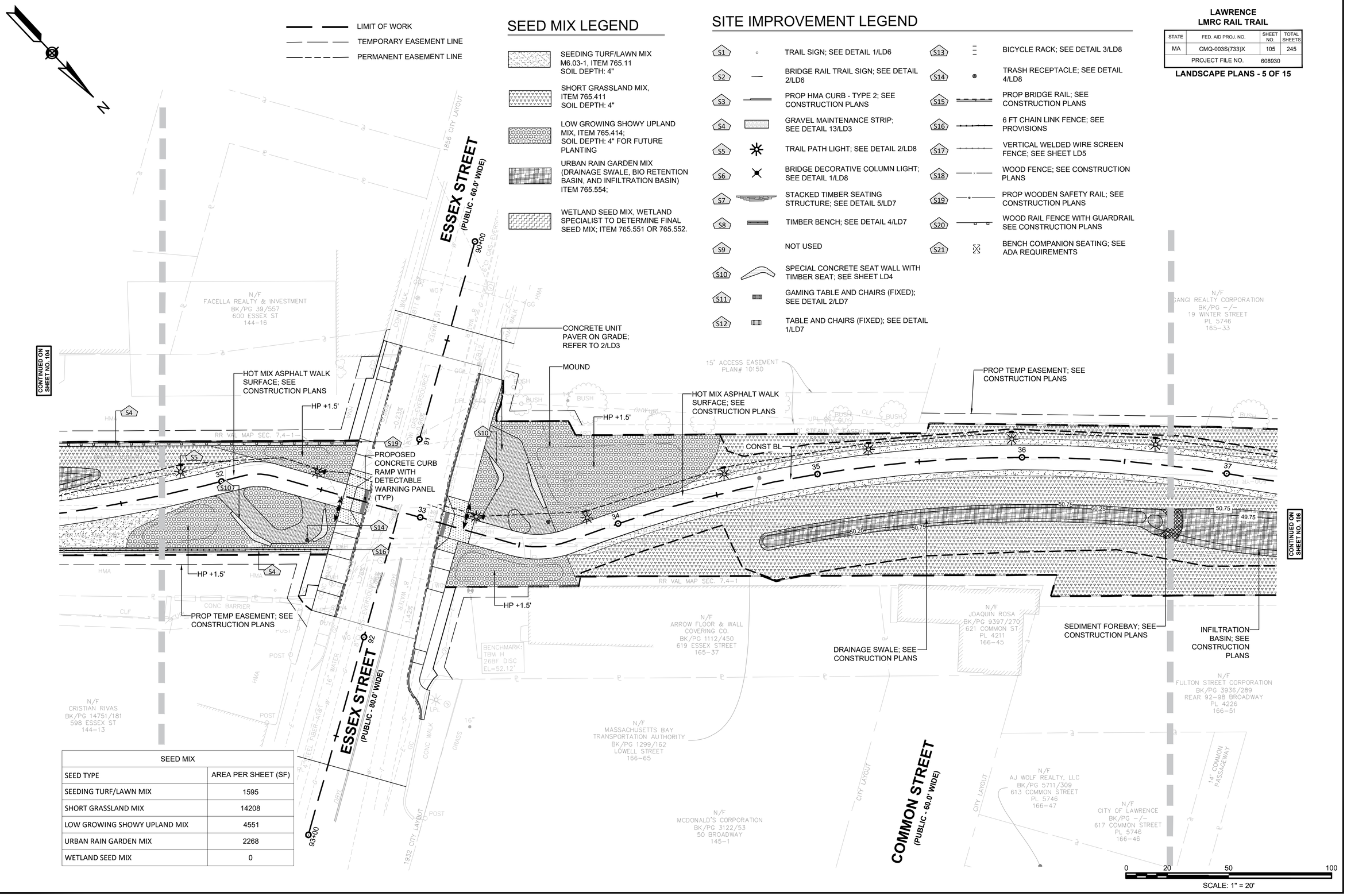

SEED MIX	
SEED TYPE	AREA PER SHEET (SF)
SEEDING TURF/LAWN MIX	1595
SHORT GRASSLAND MIX	14208
LOW GROWING SHOWY UPLAND MIX	4551
URBAN RAIN GARDEN MIX	2268
WETLAND SEED MIX	0

_LP5 ESSEX ST PLAN.DWG Plotted on 6-Sep-2024 9:56 AM

LIMIT OF WORK
TEMPORARY EASEMENT LINE
PERMANENT EASEMENT LINE

SEED MIX LEGEND

SEEDING TURF/LAWN MIX
M6.03-1, ITEM 765.11
SOIL DEPTH: 4"

SHORT GRASSLAND MIX,
ITEM 765.411
SOIL DEPTH: 4"

LOW GROWING SHOWY UPLAND MIX, ITEM 765.414;
SOIL DEPTH: 4" FOR FUTURE PLANTING

URBAN RAIN GARDEN MIX (DRAINAGE SWALE, BIO RETENTION BASIN, AND INFILTRATION BASIN) ITEM 765.554;

WETLAND SEED MIX, WETLAND SPECIALIST TO DETERMINE FINAL SEED MIX; ITEM 765.551 OR 765.552.

SEED MIX	
SEED TYPE	AREA PER SHEET (SF)
SEEDING TURF/LAWN MIX	1595
SHORT GRASSLAND MIX	14208
LOW GROWING SHOWY UPLAND MIX	522
URBAN RAIN GARDEN MIX	2268
WETLAND SEED MIX	5072

SITE IMPROVEMENT LEGEND

S1 TRAIL SIGN; SEE DETAIL 1/LD6
S2 BRIDGE RAIL TRAIL SIGN; SEE DETAIL 2/LD6
S3 PROP HMA CURB - TYPE 2; SEE CONSTRUCTION PLANS
S4 GRAVEL MAINTENANCE STRIP; SEE DETAIL 13/LD3
S5 TRAIL PATH LIGHT; SEE DETAIL 2/LD8
S6 BRIDGE DECORATIVE COLUMN LIGHT; SEE DETAIL 1/LD8
S7 STACKED TIMBER SEATING STRUCTURE; SEE DETAIL 5/LD7
S8 TIMBER BENCH; SEE DETAIL 4/LD7
S9 NOT USED
S10 SPECIAL CONCRETE SEAT WALL WITH TIMBER SEAT; SEE SHEET LD4
S11 GAMING TABLE AND CHAIRS (FIXED); SEE DETAIL 2/LD7
S12 TABLE AND CHAIRS (FIXED); SEE DETAIL 1/LD7
S13 BICYCLE RACK; SEE DETAIL 3/LD8
S14 TRASH RECEPTACLE; SEE DETAIL 4/LD8
S15 PROP BRIDGE RAIL; SEE CONSTRUCTION PLANS
S16 6 FT CHAIN LINK FENCE; SEE PROVISIONS
S17 VERTICAL WELDED WIRE SCREEN FENCE; SEE SHEET LD5
S18 WOOD FENCE; SEE CONSTRUCTION PLANS
S19 PROP WOODEN SAFETY RAIL; SEE CONSTRUCTION PLANS
S20 WOOD RAIL FENCE WITH GUARDRAIL; SEE CONSTRUCTION PLANS
S21 BENCH COMPANION SEATING; SEE ADA REQUIREMENTS

LAWRENCE
LMRC RAIL TRAIL

STATE	FED. AID PROJ. NO.	SHEET NO.	TOTAL SHEETS
MA	CMQ-003S(733)X	106	245
PROJECT FILE NO.	608930		

LANDSCAPE PLANS - 6 OF 15

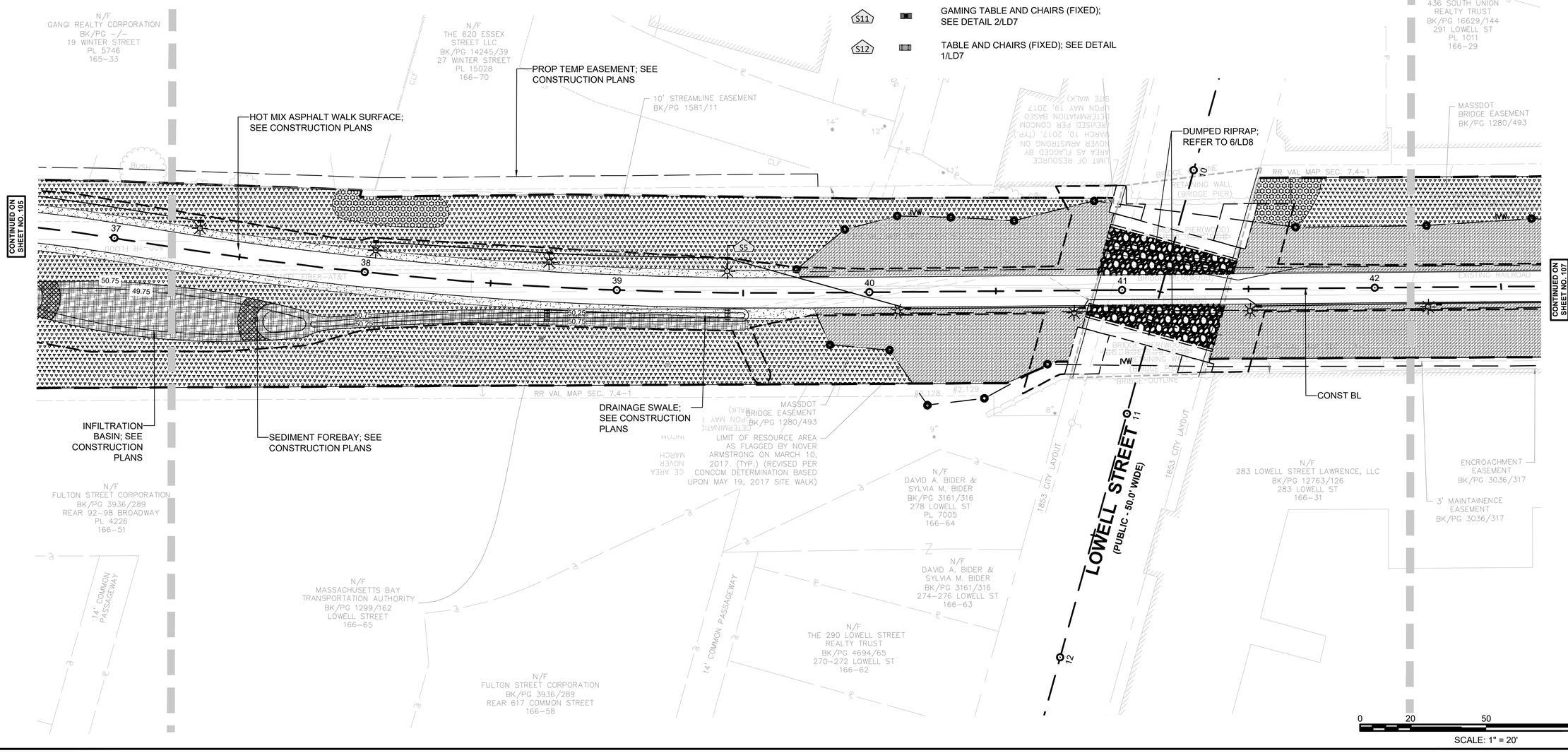

_LP6 LOWELL ST BRIDGE PLAN.DWG Plotted on 6-Sep-2024 9:57 AM

LIMIT OF WORK
TEMPORARY EASEMENT LINE
PERMANENT EASEMENT LINE

N

SEED MIX	
SEED TYPE	AREA PER SHEET (SF)
SEEDING TURF/LAWN MIX	747
SHORT GRASSLAND MIX	12831
LOW GROWING SHOWY UPLAND MIX	1094
URBAN RAIN GARDEN MIX	0
WETLAND SEED MIX	25100

SEED MIX LEGEND

SEEDING TURF/LAWN MIX
M6.03-1, ITEM 765.11
SOIL DEPTH: 4"

SHORT GRASSLAND MIX,
ITEM 765.411
SOIL DEPTH: 4"

LOW GROWING SHOWY UPLAND MIX, ITEM 765.414;
SOIL DEPTH: 4" FOR FUTURE PLANTING

URBAN RAIN GARDEN MIX (DRAINAGE SWALE, BIO RETENTION BASIN, AND INFILTRATION BASIN)
ITEM 765.554;

WETLAND SEED MIX, WETLAND SPECIALIST TO DETERMINE FINAL SEED MIX; ITEM 765.551 OR 765.552.

SITE IMPROVEMENT LEGEND

S1 — TRAIL SIGN; SEE DETAIL 1/LD6
S2 — BRIDGE RAIL TRAIL SIGN; SEE DETAIL 2/LD6
S3 — PROP HMA CURB - TYPE 2; SEE CONSTRUCTION PLANS
S4 — GRAVEL MAINTENANCE STRIP; SEE DETAIL 13/LD3
S5 — TRAIL PATH LIGHT; SEE DETAIL 2/LD8
S6 — BRIDGE DECORATIVE COLUMN LIGHT; SEE DETAIL 1/LD8
S7 — STACKED TIMBER SEATING STRUCTURE; SEE DETAIL 5/LD7
S8 — TIMBER BENCH; SEE DETAIL 4/LD7
S9 — NOT USED
S10 — SPECIAL CONCRETE SEAT WALL WITH TIMBER SEAT; SEE SHEET LD4
S11 — GAMING TABLE AND CHAIRS (FIXED); SEE DETAIL 2/LD7
S12 — TABLE AND CHAIRS (FIXED); SEE DETAIL 1/LD7
S13 — BICYCLE RACK; SEE DETAIL 3/LD8
S14 — TRASH RECEPTACLE; SEE DETAIL 4/LD8
S15 — PROP BRIDGE RAIL; SEE CONSTRUCTION PLANS
S16 — 6 FT CHAIN LINK FENCE; SEE PROVISIONS
S17 — VERTICAL WELDED WIRE SCREEN FENCE; SEE SHEET LD5
S18 — WOOD FENCE; SEE CONSTRUCTION PLANS
S19 — PROP WOODEN SAFETY RAIL; SEE CONSTRUCTION PLANS
S20 — WOOD RAIL FENCE WITH GUARDRAIL SEE CONSTRUCTION PLANS
S21 — BENCH COMPANION SEATING; SEE ADA REQUIREMENTS

LAWRENCE
LMRC RAIL TRAIL

STATE	FED. AID PROJ. NO.	SHEET NO.	TOTAL SHEETS
MA	CMQ-003S(733)X	107	245
PROJECT FILE NO.	608930		

LANDSCAPE PLANS - 7 OF 15

_LP7 WETLANDS CORRIDOR PLAN.DWG Plotted on 6-Sep-2024 9:58 AM

100-FT BUFFER ZONE

N/F
HECTOR B. CHECO
BK/PG 16108/310
17 MORTON ST
166-21

N/F
436 SOUTH UNION
REALTY TRUST
BK/PG 16629/144
291 LOWELL ST
PL 1011
166-29

N/F
MASSACHUSETTS BAY
TRANSPORTATION AUTHORITY
BK/PG 1299/162
HAVERHILL STREET
167-2

N/F
DAKE, LLC
BK/PG 9501/326
27-31 MORTON ST
PL 4418
166-19

N/F
LAWRENCE HOUSING
AUTHORITY
BK/PG -/-
33-47 MORTON ST
166-18

MASSDOT
BRIDGE EASEMENT
BK/PG 1280/493

WETLAND REPLICATION AREA, SEE CONSTRUCTION PLANS

TREELINE(TYP.)

RR VAL MAP SEC. 7.4-1

RR VAL MAP SEC. 7.4-2

10" STEAMLINE EASEMENT

EXISTING RAILROAD

IVW

43 44 45 46 47 48

S5

CONST BL

STONE RETAINING WALL

LIMIT OF RESOURCE AREA AS FLAGGED BY NOVER ARMSTRONG ON MARCH 10, 2017. (TYP.) (REVISED PER CONCOM DETERMINATION BASED UPON MAY 19, 2017 SITE WALK)

WETLAND REPLICATION AREA, SEE CONSTRUCTION PLANS

CONTINUED ON SHEET NO. 106

CONTINUED ON SHEET NO. 108

ENCROACHMENT EASEMENT
BK/PG 3036/317

3' MAINTAINENCE EASEMENT
BK/PG 3036/317

N/F
283 LOWELL STREET LAWRENCE, LLC
BK/PG 12763/126
283 LOWELL ST
166-31

CLYDE LANE (PRIVATE)

OLIVER PLACE (PRIVATE)

OLIVER PLACE (PRIVATE)

N/F
MONICAH M. MARSH
BK/PG 14131/253
10-14 BRADFORD PLACE
166-40

N/F
CITY OF LAWRENCE
BK/PG 10095/356
8 BRADFORD PLACE
166-41

N/F
5-9 MILL STREET, LLC
BK/PG 15947/238
135 BRADFORD
167-1

0 20 50 100
SCALE: 1" = 20'

LIMIT OF WORK

TEMPORARY EASEMENT LINE

PERMANENT EASEMENT LINE

SEED MIX	
SEED TYPE	AREA PER SHEET (SF)
SEEDING TURF/LAWN MIX	2405
SHORT GRASSLAND MIX	12167
LOW GROWING SHOWY UPLAND MIX	6723
URBAN RAIN GARDEN MIX	1923
WETLAND SEED MIX	0

SEED MIX LEGEND

SEEDING TURF/LAWN MIX
M6.03-1, ITEM 765.11
SOIL DEPTH: 4"

SHORT GRASSLAND MIX,
ITEM 765.411
SOIL DEPTH: 4"

LOW GROWING SHOWY UPLAND MIX, ITEM 765.414;
SOIL DEPTH: 4" FOR FUTURE PLANTING

URBAN RAIN GARDEN MIX (DRAINAGE SWALE, BIO RETENTION BASIN, AND INFILTRATION BASIN) ITEM 765.554;

WETLAND SEED MIX, WETLAND SPECIALIST TO DETERMINE FINAL SEED MIX; ITEM 765.551 OR 765.552.

SITE IMPROVEMENT LEGEND

S1 TRAIL SIGN; SEE DETAIL 1/LD6

S2 BRIDGE RAIL TRAIL SIGN; SEE DETAIL 2/LD6

S3 PROP HMA CURB - TYPE 2; SEE CONSTRUCTION PLANS

S4 GRAVEL MAINTENANCE STRIP; SEE DETAIL 13/LD3

S5 TRAIL PATH LIGHT; SEE DETAIL 2/LD8

S6 BRIDGE DECORATIVE COLUMN LIGHT; SEE DETAIL 1/LD8

S7 STACKED TIMBER SEATING STRUCTURE; SEE DETAIL 5/LD7

S8 TIMBER BENCH; SEE DETAIL 4/LD7

S9 NOT USED

S10 SPECIAL CONCRETE SEAT WALL WITH TIMBER SEAT; SEE SHEET LD4

S11 GAMING TABLE AND CHAIRS (FIXED); SEE DETAIL 2/LD7

S12 TABLE AND CHAIRS (FIXED); SEE DETAIL 1/LD7

S13 BICYCLE RACK; SEE DETAIL 3/LD8

S14 TRASH RECEPTACLE; SEE DETAIL 4/LD8

S15 PROP BRIDGE RAIL; SEE CONSTRUCTION PLANS

S16 6 FT CHAIN LINK FENCE; SEE PROVISIONS

S17 VERTICAL WELDED WIRE SCREEN FENCE; SEE SHEET LD5

S18 WOOD FENCE; SEE CONSTRUCTION PLANS

S19 PROP WOODEN SAFETY RAIL; SEE CONSTRUCTION PLANS

S20 WOOD RAIL FENCE WITH GUARDRAIL; SEE CONSTRUCTION PLANS

S21 BENCH COMPANION SEATING; SEE ADA REQUIREMENTS

LAWRENCE
LMRC RAIL TRAIL

STATE	FED. AID PROJ. NO.	SHEET NO.	TOTAL SHEETS
MA	CMQ-003S(733)X	108	245
PROJECT FILE NO.	608930		

LANDSCAPE PLANS - 8 OF 15

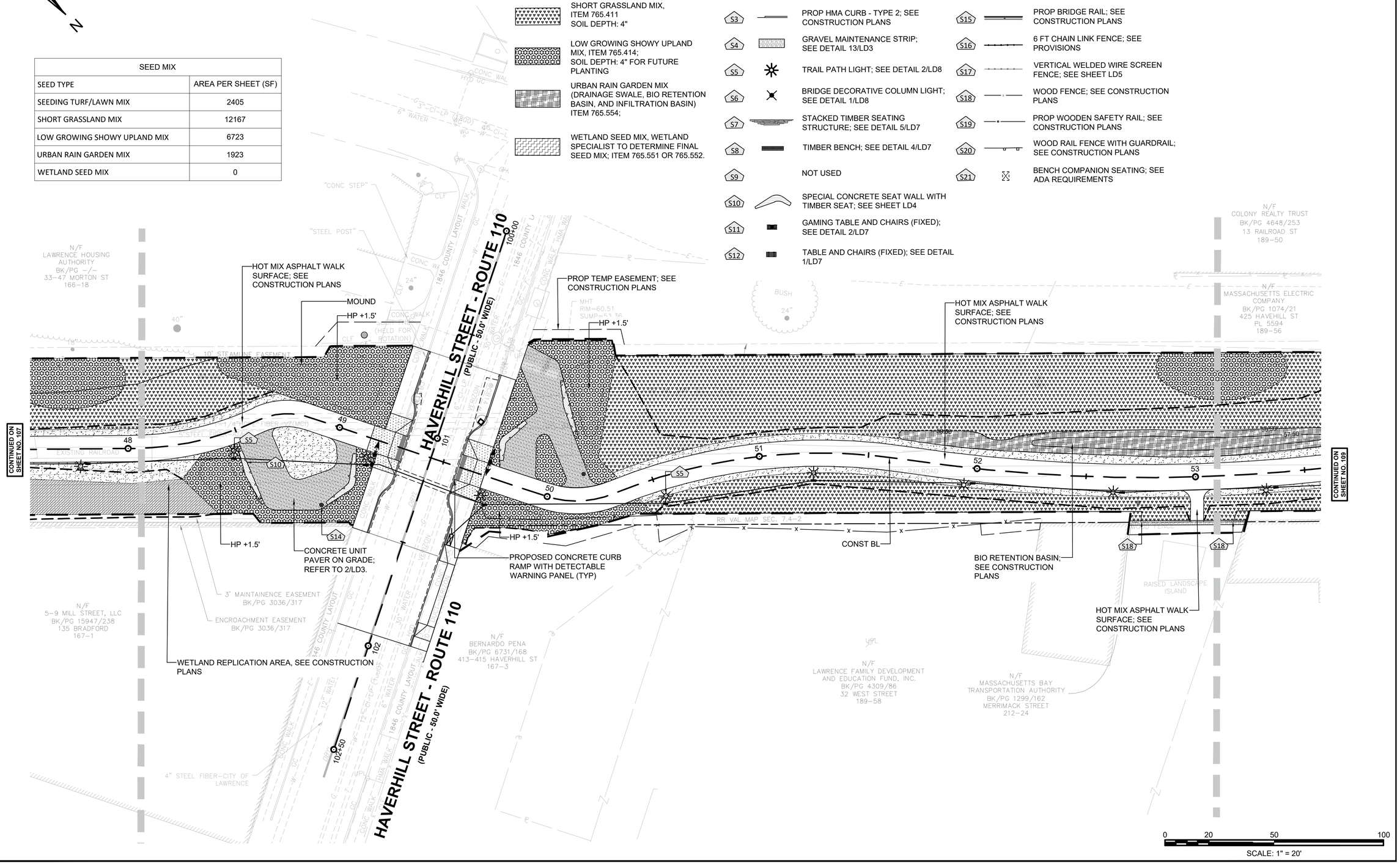

_LP8 HAVERHILL INTERSECTION PLAN.DWG Plotted on 6-Sep-2024 9:59 AM

SITE IMPROVEMENT LEGEND

S1	◦	TRAIL SIGN; SEE DETAIL 1/LD6	S13		BICYCLE RACK; SEE DETAIL 3/LD8
S2	—	BRIDGE RAIL TRAIL SIGN; SEE DETAIL 2/LD6	S14		TRASH RECEPTACLE; SEE DETAIL 4/LD8
S3		PROP HMA CURB - TYPE 2; SEE CONSTRUCTION PLANS	S15		PROP BRIDGE RAIL; SEE CONSTRUCTION PLANS
S4		GRAVEL MAINTENANCE STRIP; SEE DETAIL 13/LD3	S16		6 FT CHAIN LINK FENCE; SEE PROVISIONS
S5		TRAIL PATH LIGHT; SEE DETAIL 2/LD8	S17		VERTICAL WELDED WIRE SCREEN FENCE; SEE SHEET LD5
S6		BRIDGE DECORATIVE COLUMN LIGHT; SEE DETAIL 1/LD8	S18		WOOD FENCE; SEE CONSTRUCTION PLANS
S7		STACKED TIMBER SEATING STRUCTURE; SEE DETAIL 5/LD7	S19		PROP WOODEN SAFETY RAIL; SEE CONSTRUCTION PLANS
S8		TIMBER BENCH; SEE DETAIL 4/LD7	S20		WOOD RAIL FENCE WITH GUARDRAIL SEE CONSTRUCTION PLANS
S9		NOT USED	S21		BENCH COMPANION SEATING; SEE ADA REQUIREMENTS
S10		SPECIAL CONCRETE SEAT WALL WITH TIMBER SEAT; SEE SHEET LD4			
S11		GAMING TABLE AND CHAIRS (FIXED); SEE DETAIL 2/LD7			
S12		TABLE AND CHAIRS (FIXED); SEE DETAIL 1/LD7			

SEED MIX LEGEND

- SEEDING TURF/LAWN MIX M6.03-1, ITEM 765.11 SOIL DEPTH: 4"
- SHORT GRASSLAND MIX, ITEM 765.411 SOIL DEPTH: 4"
- LOW GROWING SHOWY UPLAND MIX, ITEM 765.414; SOIL DEPTH: 4" FOR FUTURE PLANTING
- URBAN RAIN GARDEN MIX (DRAINAGE SWALE, BIO RETENTION BASIN, AND INFILTRATION BASIN) ITEM 765.554;
- WETLAND SEED MIX, WETLAND SPECIALIST TO DETERMINE FINAL SEED MIX; ITEM 765.551 OR 765.552.

LIMIT OF WORK
TEMPORARY EASEMENT LINE
PERMANENT EASEMENT LINE

LAWRENCE
LMRC RAIL TRAIL

STATE	FED. AID PROJ. NO.	SHEET NO.	TOTAL SHEETS
MA	CMQ-003S(733)X	109	245
PROJECT FILE NO.	608930		

LANDSCAPE PLANS - 9 OF 15

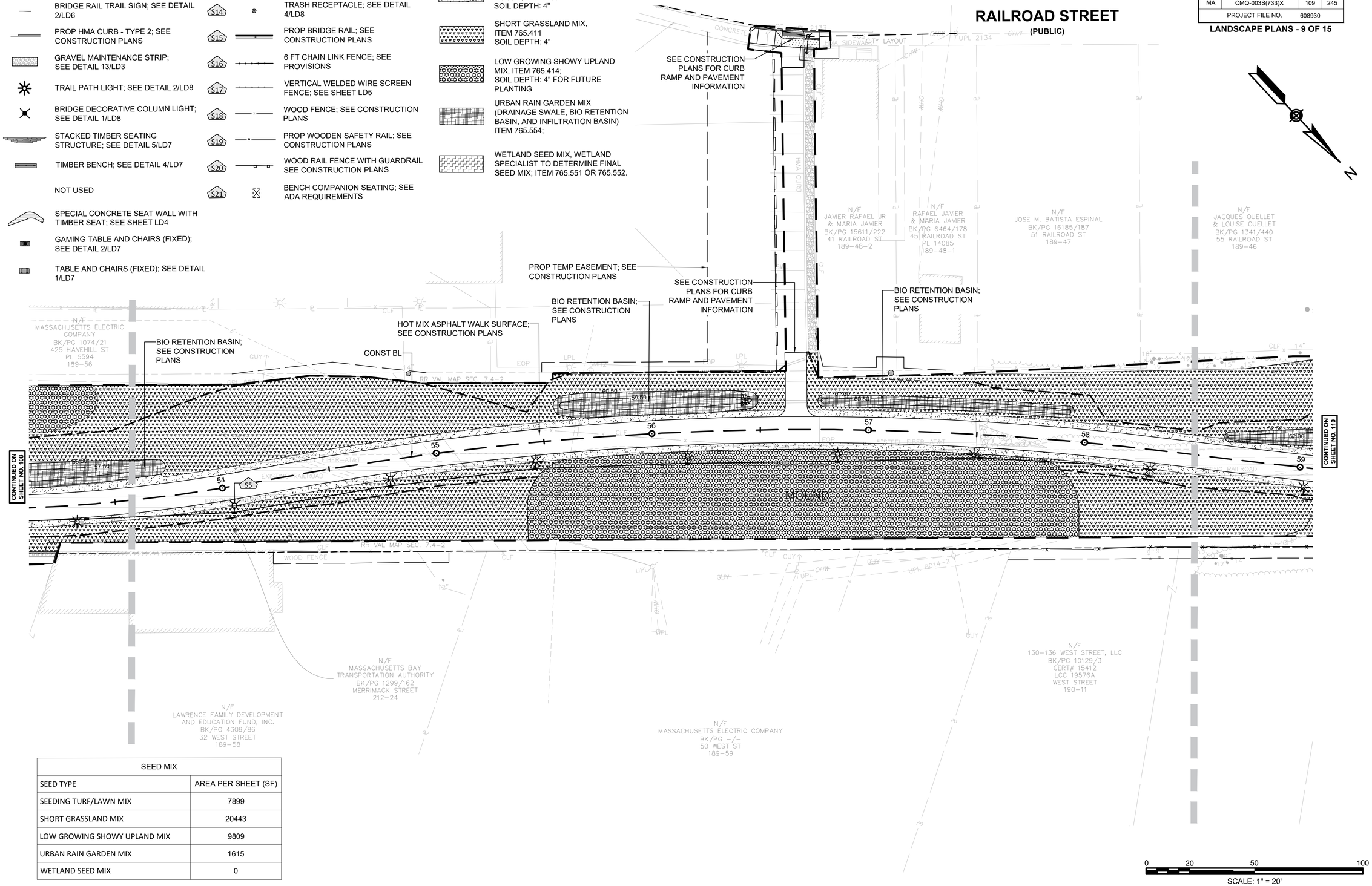

SEED MIX	
SEED TYPE	AREA PER SHEET (SF)
SEEDING TURF/LAWN MIX	7899
SHORT GRASSLAND MIX	20443
LOW GROWING SHOWY UPLAND MIX	9809
URBAN RAIN GARDEN MIX	1615
WETLAND SEED MIX	0

_LP9 RAILROAD ST CONNECTOR PLAN.DWG Plotted on 6-Sep-2024 10:00 AM

LIMIT OF WORK
TEMPORARY EASEMENT LINE
PERMANENT EASEMENT LINE

SEED MIX LEGEND

SEEDING TURF/LAWN MIX
M6.03-1, ITEM 765.11
SOIL DEPTH: 4"

SHORT GRASSLAND MIX,
ITEM 765.411
SOIL DEPTH: 4"

LOW GROWING SHOWY UPLAND MIX, ITEM 765.414;
SOIL DEPTH: 4" FOR FUTURE PLANTING

URBAN RAIN GARDEN MIX (DRAINAGE SWALE, BIO RETENTION BASIN, AND INFILTRATION BASIN) ITEM 765.554;

WETLAND SEED MIX, WETLAND SPECIALIST TO DETERMINE FINAL SEED MIX; ITEM 765.551 OR 765.552.

SITE IMPROVEMENT LEGEND

S1 TRAIL SIGN; SEE DETAIL 1/LD6
S2 BRIDGE RAIL TRAIL SIGN; SEE DETAIL 2/LD6
S3 PROP HMA CURB - TYPE 2; SEE CONSTRUCTION PLANS
S4 GRAVEL MAINTENANCE STRIP; SEE DETAIL 13/LD3
S5 TRAIL PATH LIGHT; SEE DETAIL 2/LD8
S6 BRIDGE DECORATIVE COLUMN LIGHT; SEE DETAIL 1/LD8
S7 STACKED TIMBER SEATING STRUCTURE; SEE DETAIL 5/LD7
S8 TIMBER BENCH; SEE DETAIL 4/LD7
S9 NOT USED
S10 SPECIAL CONCRETE SEAT WALL WITH TIMBER SEAT; SEE SHEET LD4
S11 GAMING TABLE AND CHAIRS (FIXED); SEE DETAIL 2/LD7
S12 TABLE AND CHAIRS (FIXED); SEE DETAIL 1/LD7
S13 BICYCLE RACK; SEE DETAIL 3/LD8
S14 TRASH RECEPTACLE; SEE DETAIL 4/LD8
S15 PROP BRIDGE RAIL; SEE CONSTRUCTION PLANS
S16 6 FT CHAIN LINK FENCE; SEE PROVISIONS
S17 VERTICAL WELDED WIRE SCREEN FENCE; SEE SHEET LD5
S18 WOOD FENCE; SEE CONSTRUCTION PLANS
S19 PROP WOODEN SAFETY RAIL; SEE CONSTRUCTION PLANS
S20 WOOD RAIL FENCE WITH GUARDRAIL; SEE CONSTRUCTION PLANS
S21 BENCH COMPANION SEATING; SEE ADA REQUIREMENTS

LAWRENCE
LMRC RAIL TRAIL

STATE	FED. AID PROJ. NO.	SHEET NO.	TOTAL SHEETS
MA	CMQ-003S(733)X	110	245
PROJECT FILE NO.	608930		

LANDSCAPE PLANS - 10 OF 15

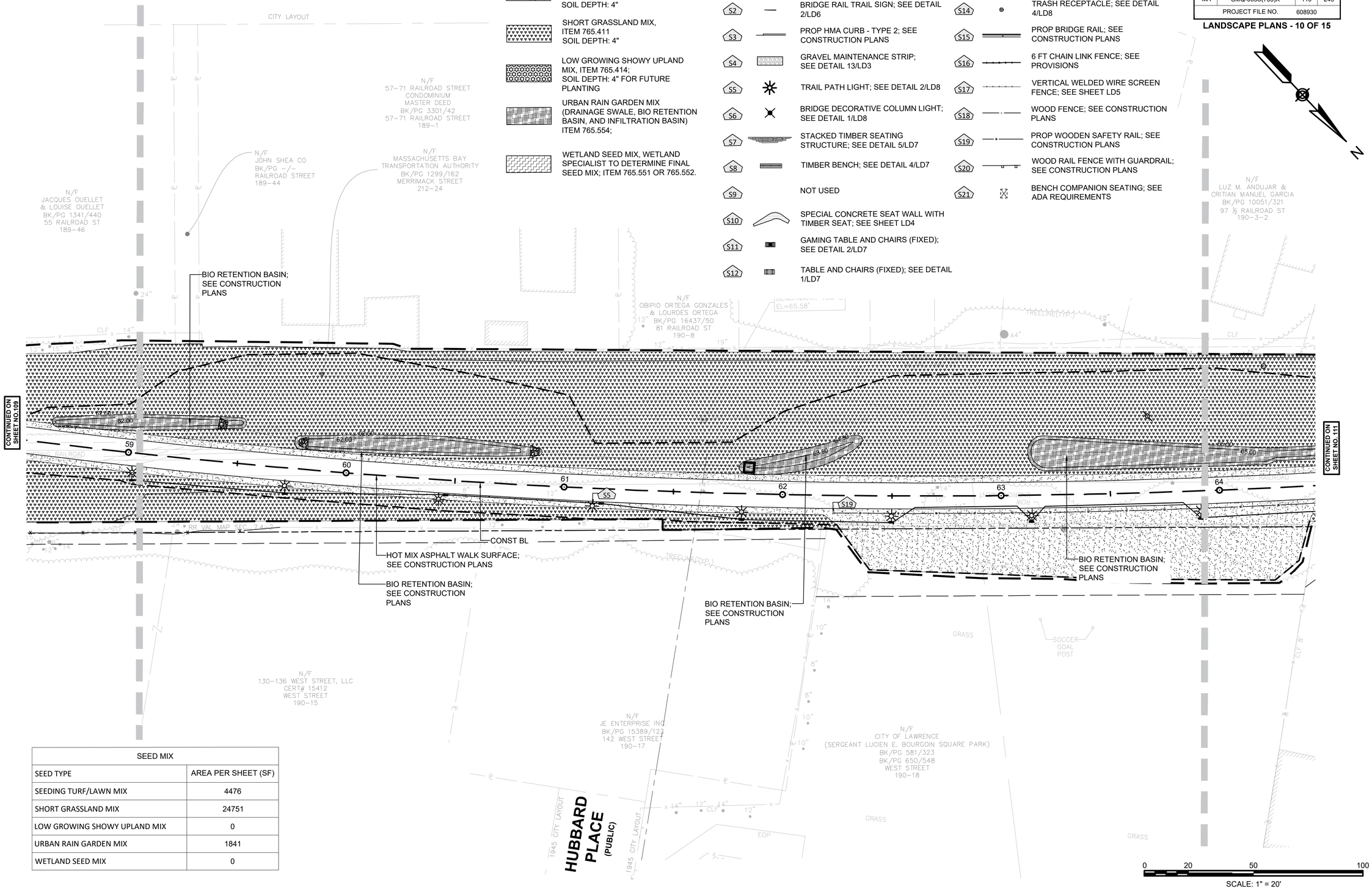

SEED MIX	
SEED TYPE	AREA PER SHEET (SF)
SEEDING TURF/LAWN MIX	4476
SHORT GRASSLAND MIX	24751
LOW GROWING SHOWY UPLAND MIX	0
URBAN RAIN GARDEN MIX	1841
WETLAND SEED MIX	0

0 20 50 100
SCALE: 1" = 20'

_LP10 BOURGOIN PARK PLAN.DWG Plotted on 6-Sep-2024 10:01 AM

SEED MIX	
SEED TYPE	AREA PER SHEET (SF)
SEEDING TURF/LAWN MIX	2435
SHORT GRASSLAND MIX	25536
LOW GROWING SHOWY UPLAND MIX	0
URBAN RAIN GARDEN MIX	1246
WETLAND SEED MIX	0

LIMIT OF WORK

TEMPORARY EASEMENT LINE

PERMANENT EASEMENT LINE

SEED MIX LEGEND

SEEDING TURF/LAWN MIX
M6.03-1, ITEM 765.11
SOIL DEPTH: 4"

SHORT GRASSLAND MIX,
ITEM 765.411
SOIL DEPTH: 4"

LOW GROWING SHOWY UPLAND MIX, ITEM 765.414;
SOIL DEPTH: 4" FOR FUTURE PLANTING

URBAN RAIN GARDEN MIX (DRAINAGE SWALE, BIO RETENTION BASIN, AND INFILTRATION BASIN) ITEM 765.554;

WETLAND SEED MIX, WETLAND SPECIALIST TO DETERMINE FINAL SEED MIX; ITEM 765.551 OR 765.552.

SITE IMPROVEMENT LEGEND

S1 — TRAIL SIGN; SEE DETAIL 1/LD6

S2 — BRIDGE RAIL TRAIL SIGN; SEE DETAIL 2/LD6

S3 — PROP HMA CURB - TYPE 2; SEE CONSTRUCTION PLANS

S4 — GRAVEL MAINTENANCE STRIP; SEE DETAIL 13/LD3

S5 — TRAIL PATH LIGHT; SEE DETAIL 2/LD8

S6 — BRIDGE DECORATIVE COLUMN LIGHT; SEE DETAIL 1/LD8

S7 — STACKED TIMBER SEATING STRUCTURE; SEE DETAIL 5/LD7

S8 — TIMBER BENCH; SEE DETAIL 4/LD7

S9 — NOT USED

S10 — SPECIAL CONCRETE SEAT WALL WITH TIMBER SEAT; SEE SHEET LD4

S11 — GAMING TABLE AND CHAIRS (FIXED); SEE DETAIL 2/LD7

S12 — TABLE AND CHAIRS (FIXED); SEE DETAIL 1/LD7

S13 — BICYCLE RACK; SEE DETAIL 3/LD8

S14 — TRASH RECEPTACLE; SEE DETAIL 4/LD8

S15 — PROP BRIDGE RAIL; SEE CONSTRUCTION PLANS

S16 — 6 FT CHAIN LINK FENCE; SEE PROVISIONS

S17 — VERTICAL WELDED WIRE SCREEN FENCE; SEE SHEET LD5

S18 — WOOD FENCE; SEE CONSTRUCTION PLANS

S19 — PROP WOODEN SAFETY RAIL; SEE CONSTRUCTION PLANS

S20 — WOOD RAIL FENCE WITH GUARDRAIL; SEE CONSTRUCTION PLANS

S21 — BENCH COMPANION SEATING; SEE ADA REQUIREMENTS

LAWRENCE
LMRC RAIL TRAIL

STATE	FED. AID PROJ. NO.	SHEET NO.	TOTAL SHEETS
MA	CMQ-003S(733)X	111	245
	PROJECT FILE NO. 608930		

LANDSCAPE PLANS - 11 OF 15

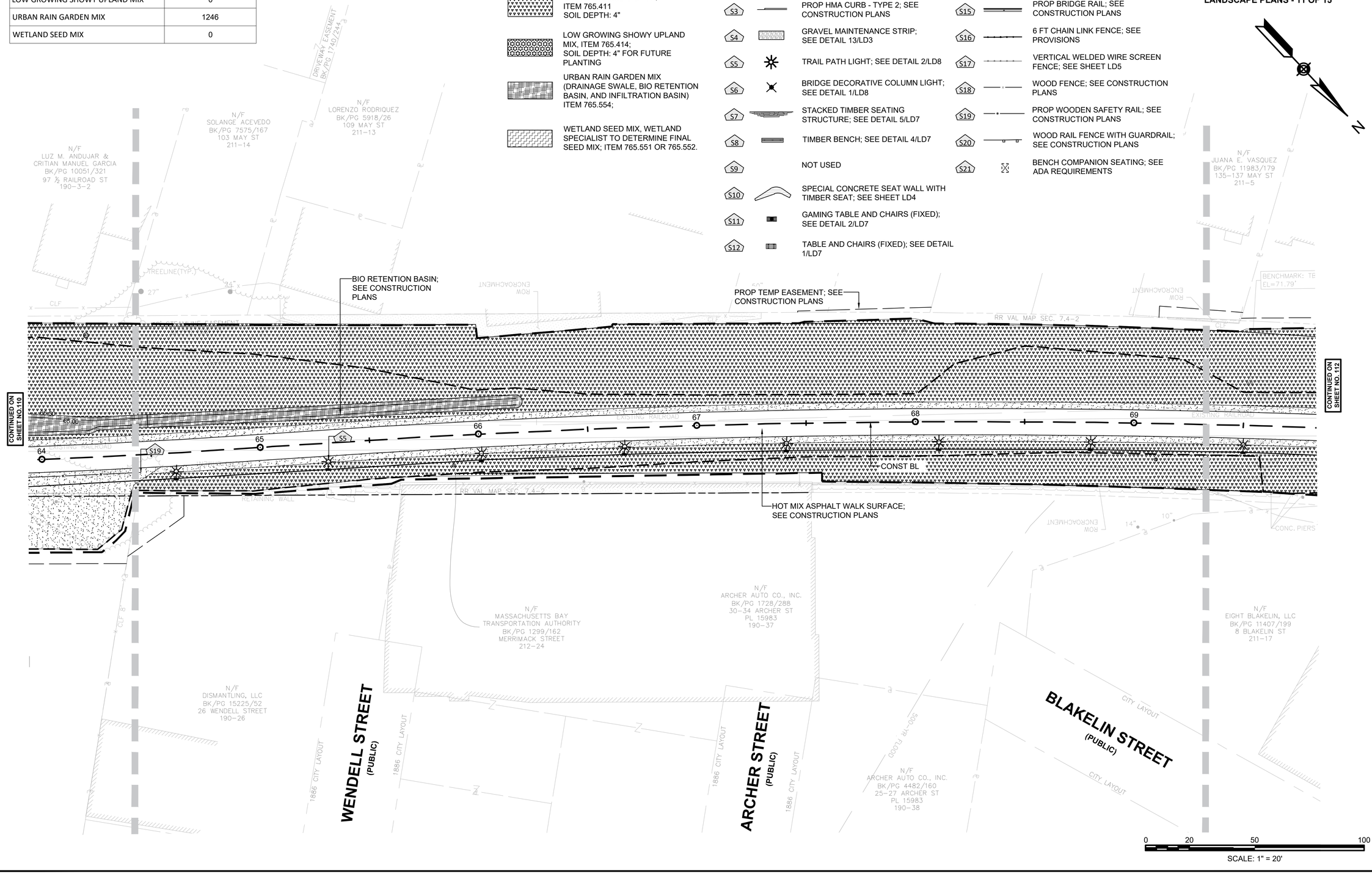

_LP11 CORRIDOR PLAN.DWG Plotted on 6-Sep-2024 10:02 AM

SEED MIX	
SEED TYPE	AREA PER SHEET (SF)
SEEDING TURF/LAWN MIX	2531
SHORT GRASSLAND MIX	25536
LOW GROWING SHOWY UPLAND MIX	6805
URBAN RAIN GARDEN MIX	1016
WETLAND SEED MIX	0

LAWRENCE
LMRC RAIL TRAIL

STATE	FED. AID PROJ. NO.	SHEET NO.	TOTAL SHEETS
MA	CMQ-003S(733)X	112	245
	PROJECT FILE NO. 608930		

LANDSCAPE PLANS - 12 OF 15

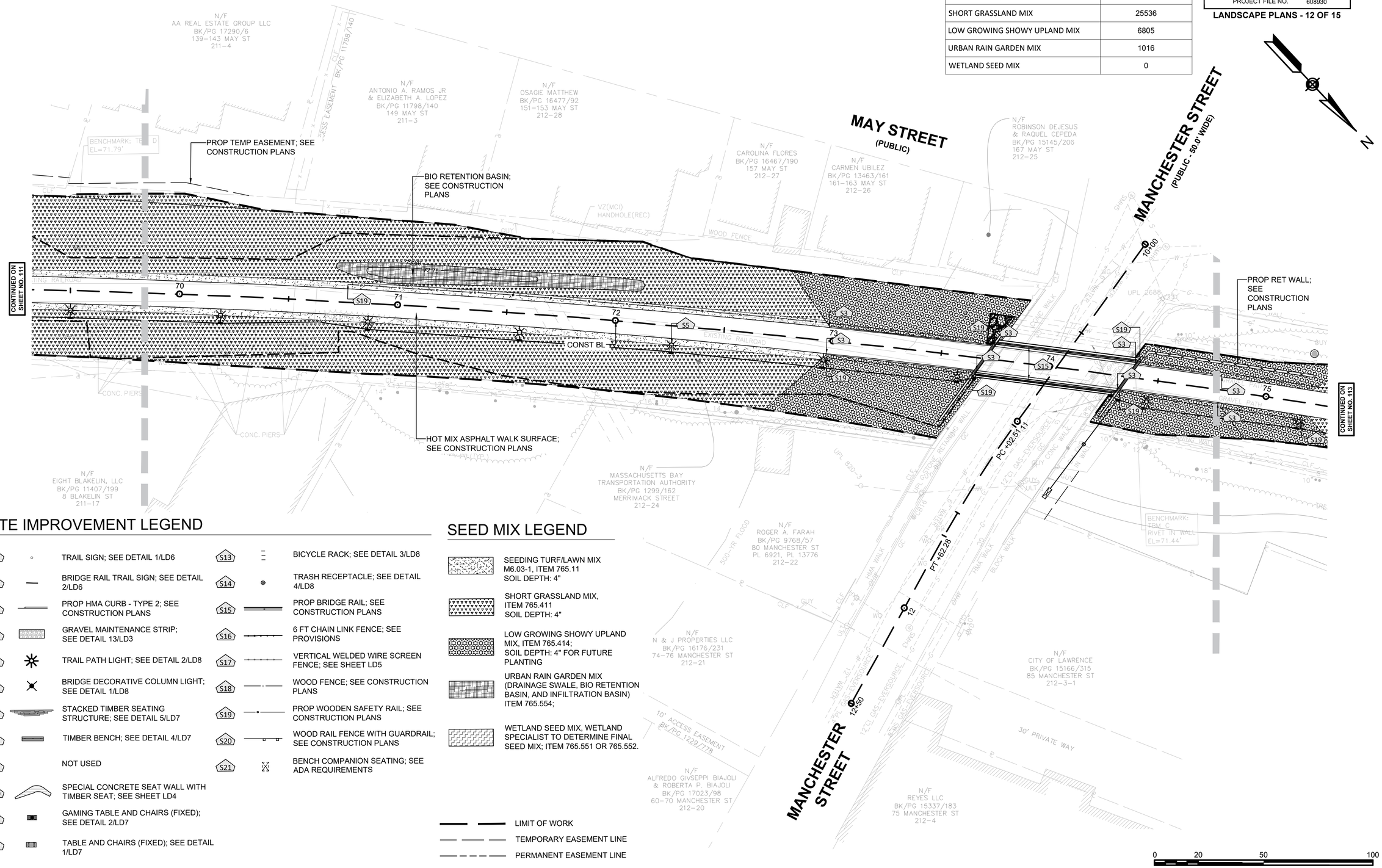

SITE IMPROVEMENT LEGEND

S1	TRAIL SIGN; SEE DETAIL 1/LD6	S13	BICYCLE RACK; SEE DETAIL 3/LD8
S2	BRIDGE RAIL TRAIL SIGN; SEE DETAIL 2/LD6	S14	TRASH RECEPTACLE; SEE DETAIL 4/LD8
S3	PROP HMA CURB - TYPE 2; SEE CONSTRUCTION PLANS	S15	PROP BRIDGE RAIL; SEE CONSTRUCTION PLANS
S4	GRAVEL MAINTENANCE STRIP; SEE DETAIL 13/LD3	S16	6 FT CHAIN LINK FENCE; SEE PROVISIONS
S5	TRAIL PATH LIGHT; SEE DETAIL 2/LD8	S17	VERTICAL WELDED WIRE SCREEN FENCE; SEE SHEET LD5
S6	BRIDGE DECORATIVE COLUMN LIGHT; SEE DETAIL 1/LD8	S18	WOOD FENCE; SEE CONSTRUCTION PLANS
S7	STACKED TIMBER SEATING STRUCTURE; SEE DETAIL 5/LD7	S19	PROP WOODEN SAFETY RAIL; SEE CONSTRUCTION PLANS
S8	TIMBER BENCH; SEE DETAIL 4/LD7	S20	WOOD RAIL FENCE WITH GUARDRAIL; SEE CONSTRUCTION PLANS
S9	NOT USED	S21	BENCH COMPANION SEATING; SEE ADA REQUIREMENTS
S10	SPECIAL CONCRETE SEAT WALL WITH TIMBER SEAT; SEE SHEET LD4		
S11	GAMING TABLE AND CHAIRS (FIXED); SEE DETAIL 2/LD7		
S12	TABLE AND CHAIRS (FIXED); SEE DETAIL 1/LD7		

SEED MIX LEGEND

- SEEDING TURF/LAWN MIX M6.03-1, ITEM 765.11 SOIL DEPTH: 4"
- SHORT GRASSLAND MIX, ITEM 765.411 SOIL DEPTH: 4"
- LOW GROWING SHOWY UPLAND MIX, ITEM 765.414; SOIL DEPTH: 4" FOR FUTURE PLANTING
- URBAN RAIN GARDEN MIX (DRAINAGE SWALE, BIO RETENTION BASIN, AND INFILTRATION BASIN) ITEM 765.554;
- WETLAND SEED MIX, WETLAND SPECIALIST TO DETERMINE FINAL SEED MIX; ITEM 765.551 OR 765.552.

- LIMIT OF WORK
- TEMPORARY EASEMENT LINE
- PERMANENT EASEMENT LINE

_LP12 MANCHESTER ST BRIDGE PLAN.DWG Plotted on 6-Sep-2024 10:03 AM

LAWRENCE
LMRC RAIL TRAIL

STATE	FED. AID PROJ. NO.	SHEET NO.	TOTAL SHEETS
MA	CMQ-003S(733)X	113	245
	PROJECT FILE NO. 608930		

LANDSCAPE PLANS - 13 OF 15

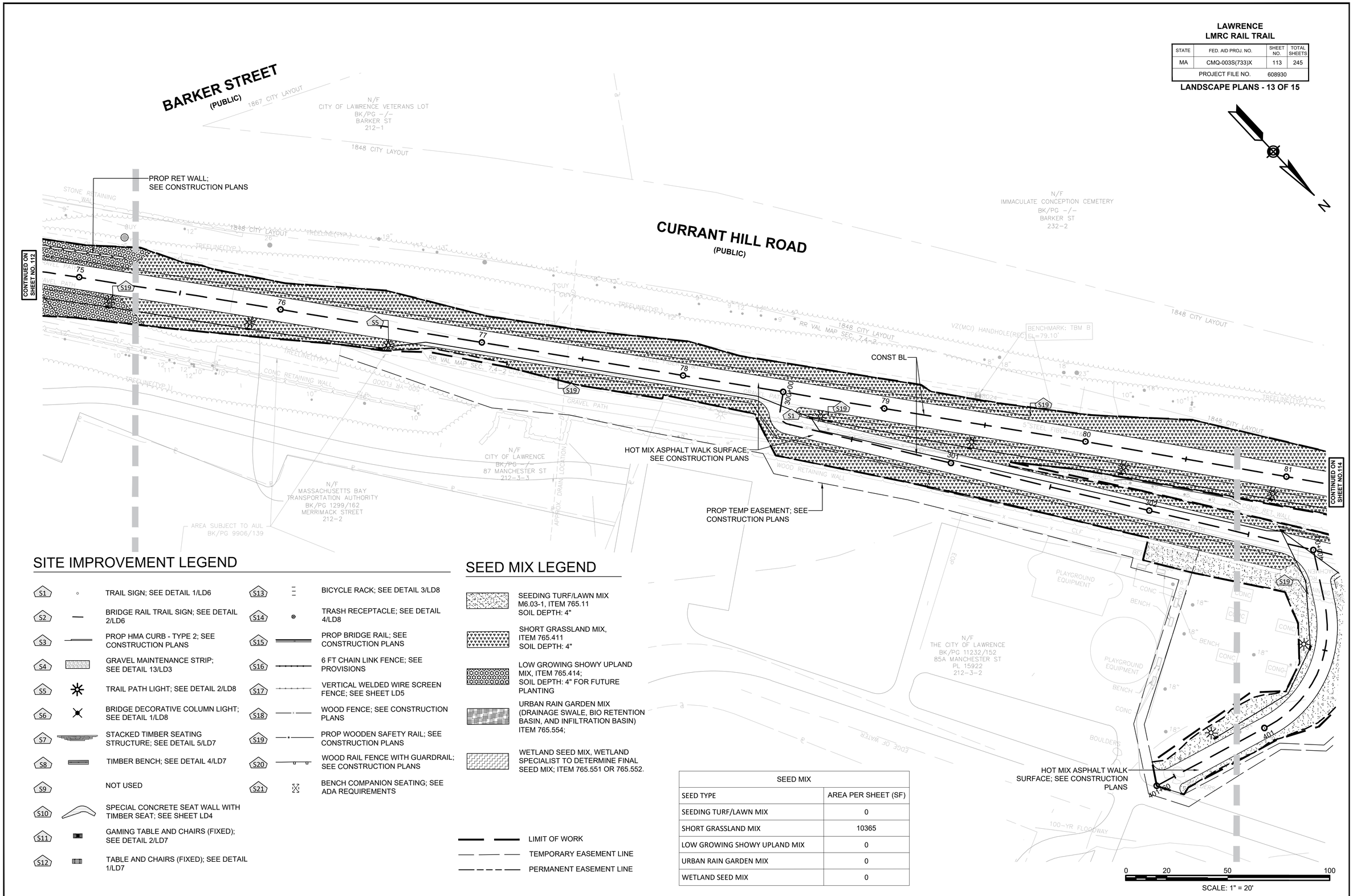

SITE IMPROVEMENT LEGEND

S1	◦	TRAIL SIGN; SEE DETAIL 1/LD6	S13	⁞	BICYCLE RACK; SEE DETAIL 3/LD8
S2	—	BRIDGE RAIL TRAIL SIGN; SEE DETAIL 2/LD6	S14	◉	TRASH RECEPTACLE; SEE DETAIL 4/LD8
S3		PROP HMA CURB - TYPE 2; SEE CONSTRUCTION PLANS	S15		PROP BRIDGE RAIL; SEE CONSTRUCTION PLANS
S4		GRAVEL MAINTENANCE STRIP; SEE DETAIL 13/LD3	S16		6 FT CHAIN LINK FENCE; SEE PROVISIONS
S5	✳	TRAIL PATH LIGHT; SEE DETAIL 2/LD8	S17		VERTICAL WELDED WIRE SCREEN FENCE; SEE SHEET LD5
S6	✳	BRIDGE DECORATIVE COLUMN LIGHT; SEE DETAIL 1/LD8	S18		WOOD FENCE; SEE CONSTRUCTION PLANS
S7		STACKED TIMBER SEATING STRUCTURE; SEE DETAIL 5/LD7	S19		PROP WOODEN SAFETY RAIL; SEE CONSTRUCTION PLANS
S8		TIMBER BENCH; SEE DETAIL 4/LD7	S20		WOOD RAIL FENCE WITH GUARDRAIL; SEE CONSTRUCTION PLANS
S9		NOT USED	S21		BENCH COMPANION SEATING; SEE ADA REQUIREMENTS
S10		SPECIAL CONCRETE SEAT WALL WITH TIMBER SEAT; SEE SHEET LD4			
S11		GAMING TABLE AND CHAIRS (FIXED); SEE DETAIL 2/LD7			
S12		TABLE AND CHAIRS (FIXED); SEE DETAIL 1/LD7			

SEED MIX LEGEND

- SEEDING TURF/LAWN MIX M6.03-1, ITEM 765.11 SOIL DEPTH: 4"
- SHORT GRASSLAND MIX, ITEM 765.411 SOIL DEPTH: 4"
- LOW GROWING SHOWY UPLAND MIX, ITEM 765.414; SOIL DEPTH: 4" FOR FUTURE PLANTING
- URBAN RAIN GARDEN MIX (DRAINAGE SWALE, BIO RETENTION BASIN, AND INFILTRATION BASIN) ITEM 765.554;
- WETLAND SEED MIX, WETLAND SPECIALIST TO DETERMINE FINAL SEED MIX; ITEM 765.551 OR 765.552.

- LIMIT OF WORK
- TEMPORARY EASEMENT LINE
- PERMANENT EASEMENT LINE

SEED MIX	
SEED TYPE	AREA PER SHEET (SF)
SEEDING TURF/LAWN MIX	0
SHORT GRASSLAND MIX	10365
LOW GROWING SHOWY UPLAND MIX	0
URBAN RAIN GARDEN MIX	0
WETLAND SEED MIX	0

_LP13 SPICKET PARK CORRIDOR PLAN.DWG Plotted on 6-Sep-2024 10:03 AM

LAWRENCE
LMRC RAIL TRAIL

STATE	FED. AID PROJ. NO.	SHEET NO.	TOTAL SHEETS
MA	CMQ-003S(733)X	114	245
	PROJECT FILE NO.	608930	

LANDSCAPE PLANS - 14 OF 15

_LP14 SPICKET PARK CORRIDOR PLAN.DWG Plotted on 6-Sep-2024 10:04 AM

CONTINUED ON SHEET NO. 115

CONTINUED ON SHEET NO. 115

CURRANT HILL ROAD
(PUBLIC)

HOT MIX ASPHALT WALK SURFACE; SEE CONSTRUCTION PLANS

CONST BL

CONST BL

HOT MIX ASPHALT WALK SURFACE; SEE CONSTRUCTION PLANS

GRAVEL SURFACE; REFER TO 7/LD8

PROP PERM EASEMENT; SEE CONSTRUCTION PLANS

PROP TEMP EASEMENT; SEE CONSTRUCTION PLANS

HOT MIX ASPHALT WALK SURFACE; SEE CONSTRUCTION PLANS

N/F MASSACHUSETTS BAY TRANSPORTATION AUTHORITY BK/PG 1299/162 MERRIMACK STREET 212-2

1848 CITY LAYOUT

RR VAL MAP SEC. 7.4-2

100-FT BUFFER ZONE

25-FT RIVERFRONT AREA

LIMIT OF RESOURCE AREA AS FLAGGED BY NOVER ARMSTRONG ON MARCH 10, 2017. (TYP.)

EDGE OF WATER

BANK

SITE IMPROVEMENT LEGEND

S1	◦	TRAIL SIGN; SEE DETAIL 1/LD6	S13	⁞	BICYCLE RACK; SEE DETAIL 3/LD8
S2	—	BRIDGE RAIL TRAIL SIGN; SEE DETAIL 2/LD6	S14	◉	TRASH RECEPTACLE; SEE DETAIL 4/LD8
S3		PROP HMA CURB - TYPE 2; SEE CONSTRUCTION PLANS	S15		PROP BRIDGE RAIL; SEE CONSTRUCTION PLANS
S4		GRAVEL MAINTENANCE STRIP; SEE DETAIL 13/LD3	S16		6 FT CHAIN LINK FENCE; SEE PROVISIONS
S5	✳	TRAIL PATH LIGHT; SEE DETAIL 2/LD8	S17		VERTICAL WELDED WIRE SCREEN FENCE; SEE SHEET LD5
S6	✶	BRIDGE DECORATIVE COLUMN LIGHT; SEE DETAIL 1/LD8	S18		WOOD FENCE; SEE CONSTRUCTION PLANS
S7		STACKED TIMBER SEATING STRUCTURE; SEE DETAIL 5/LD7	S19		PROP WOODEN SAFETY RAIL; SEE CONSTRUCTION PLANS
S8		TIMBER BENCH; SEE DETAIL 4/LD7	S20		WOOD RAIL FENCE WITH GUARDRAIL; SEE CONSTRUCTION PLANS
S9		NOT USED	S21		BENCH COMPANION SEATING; SEE ADA REQUIREMENTS
S10		SPECIAL CONCRETE SEAT WALL WITH TIMBER SEAT; SEE SHEET LD4			
S11		GAMING TABLE AND CHAIRS (FIXED); SEE DETAIL 2/LD7			
S12		TABLE AND CHAIRS (FIXED); SEE DETAIL 1/LD7			

SEED MIX LEGEND

- SEEDING TURF/LAWN MIX M6.03-1, ITEM 765.11 SOIL DEPTH: 4"
- SHORT GRASSLAND MIX, ITEM 765.411 SOIL DEPTH: 4"
- LOW GROWING SHOWY UPLAND MIX, ITEM 765.414; SOIL DEPTH: 4" FOR FUTURE PLANTING
- URBAN RAIN GARDEN MIX (DRAINAGE SWALE, BIO RETENTION BASIN, AND INFILTRATION BASIN) ITEM 765.554;
- WETLAND SEED MIX, WETLAND SPECIALIST TO DETERMINE FINAL SEED MIX; ITEM 765.551 OR 765.552.

LIMIT OF WORK

TEMPORARY EASEMENT LINE

PERMANENT EASEMENT LINE

SEED MIX	
SEED TYPE	AREA PER SHEET (SF)
SEEDING TURF/LAWN MIX	3140
SHORT GRASSLAND MIX	12459
LOW GROWING SHOWY UPLAND MIX	8279
URBAN RAIN GARDEN MIX	0
WETLAND SEED MIX	0

0 20 50 100

SCALE: 1" = 20'

SEED MIX	
SEED TYPE	AREA PER SHEET (SF)
SEEDING TURF/LAWN MIX	0
SHORT GRASSLAND MIX	4013
LOW GROWING SHOWY UPLAND MIX	0
URBAN RAIN GARDEN MIX	0
WETLAND SEED MIX	0

LIMIT OF WORK

TEMPORARY EASEMENT LINE

PERMANENT EASEMENT LINE

SEED MIX LEGEND

SEEDING TURF/LAWN MIX
M6.03-1, ITEM 765.11
SOIL DEPTH: 4"

SHORT GRASSLAND MIX,
ITEM 765.411
SOIL DEPTH: 4"

LOW GROWING SHOWY UPLAND MIX, ITEM 765.414;
SOIL DEPTH: 4" FOR FUTURE PLANTING

URBAN RAIN GARDEN MIX (DRAINAGE SWALE, BIO RETENTION BASIN, AND INFILTRATION BASIN) ITEM 765.554;

WETLAND SEED MIX, WETLAND SPECIALIST TO DETERMINE FINAL SEED MIX; ITEM 765.551 OR 765.552.

SITE IMPROVEMENT LEGEND

- S1 — TRAIL SIGN; SEE DETAIL 1/LD6
- S2 — BRIDGE RAIL TRAIL SIGN; SEE DETAIL 2/LD6
- S3 — PROP HMA CURB - TYPE 2; SEE CONSTRUCTION PLANS
- S4 — GRAVEL MAINTENANCE STRIP; SEE DETAIL 13/LD3
- S5 — TRAIL PATH LIGHT; SEE DETAIL 2/LD8
- S6 — BRIDGE DECORATIVE COLUMN LIGHT; SEE DETAIL 1/LD8
- S7 — STACKED TIMBER SEATING STRUCTURE; SEE DETAIL 5/LD7
- S8 — TIMBER BENCH; SEE DETAIL 4/LD7
- S9 — NOT USED
- S10 — SPECIAL CONCRETE SEAT WALL WITH TIMBER SEAT; SEE SHEET LD4
- S11 — GAMING TABLE AND CHAIRS (FIXED); SEE DETAIL 2/LD7
- S12 — TABLE AND CHAIRS (FIXED); SEE DETAIL 1/LD7
- S13 — BICYCLE RACK; SEE DETAIL 3/LD8
- S14 — TRASH RECEPTACLE; SEE DETAIL 4/LD8
- S15 — PROP BRIDGE RAIL; SEE CONSTRUCTION PLANS
- S16 — 6 FT CHAIN LINK FENCE; SEE PROVISIONS
- S17 — VERTICAL WELDED WIRE SCREEN FENCE; SEE SHEET LD5
- S18 — WOOD FENCE; SEE CONSTRUCTION PLANS
- S19 — PROP WOODEN SAFETY RAIL; SEE CONSTRUCTION PLANS
- S20 — WOOD RAIL FENCE WITH GUARDRAIL; SEE CONSTRUCTION PLANS
- S21 — BENCH COMPANION SEATING; SEE ADA REQUIREMENTS

LAWRENCE
LMRC RAIL TRAIL

STATE	FED. AID PROJ. NO.	SHEET NO.	TOTAL SHEETS
MA	CMQ-003S(733)X	115	245
PROJECT FILE NO.	608930		

LANDSCAPE PLANS - 15 OF 15

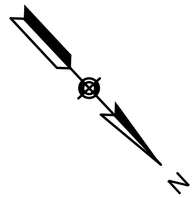

_LP15 METHUEN TERMINUS PLAN.DWG Plotted on 6-Sep-2024 10:05 AM

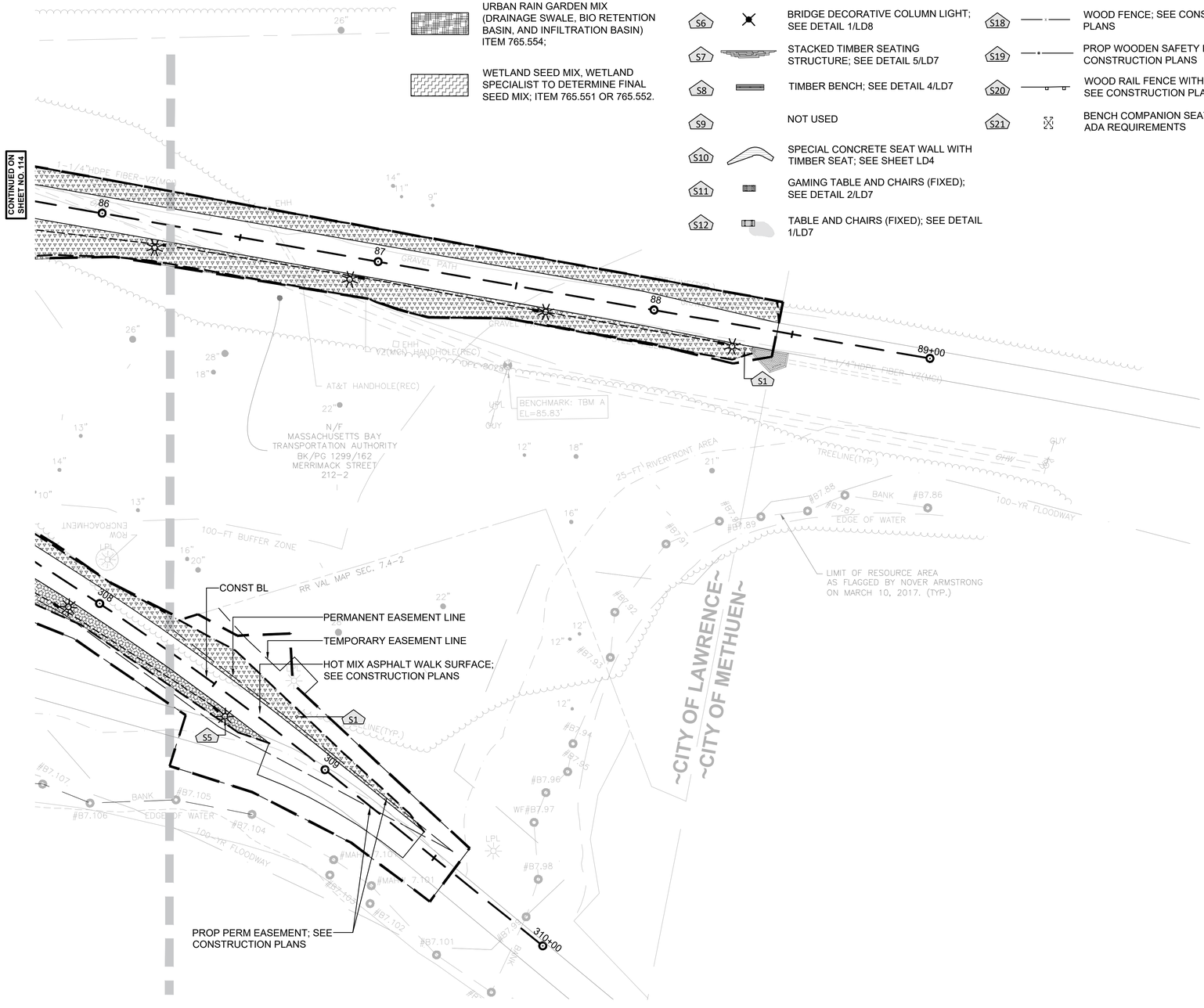

0 20 50 100

SCALE: 1" = 20'

LAWRENCE
LMRC RAIL TRAIL

STATE	FED. AID PROJ. NO.	SHEET NO.	TOTAL SHEETS
MA	CMQ-003S(733)X	116	245
PROJECT FILE NO.	608930		

LANDSCAPE DETAILS - 1 OF 8

LD1 SITE PROTECTION.DWG Plotted on 9-Sep-2024 2:51 PM

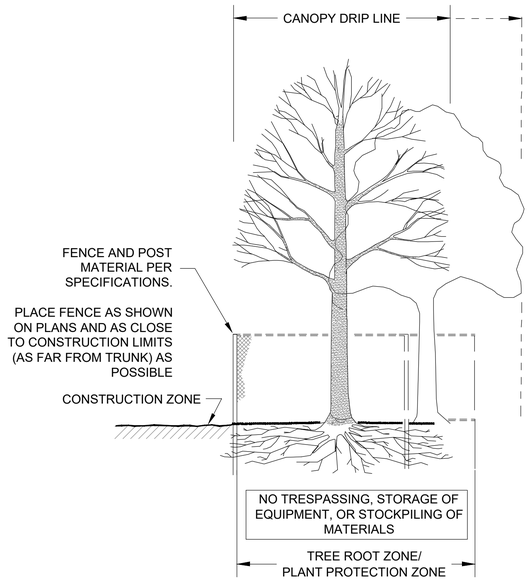

SECTION - FENCE PROTECTION OF ROOT ZONE

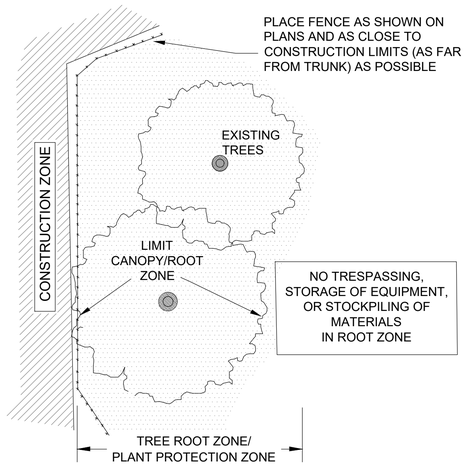

PLAN VIEW - FENCE PROTECTION OF ROOT ZONE

1 TREE PROTECTION-ROOT ZONE
Scale: NTS

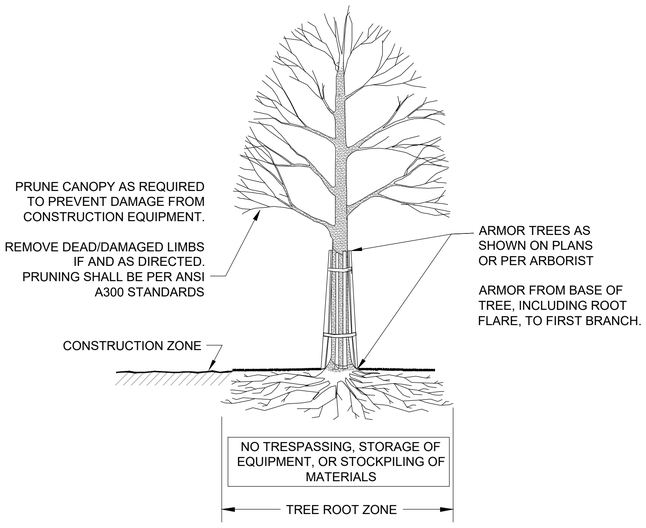

SECTION - TRUNK ARMORING & PRUNING

2 TREE PROTECTION-TRUNK
Scale: NTS

LAWRENCE
LMRC RAIL TRAIL

STATE	FED. AID PROJ. NO.	SHEET NO.	TOTAL SHEETS
MA	CMQ-003S(733)X	117	245
PROJECT FILE NO.	608930		

LANDSCAPE DETAILS - 2 OF 8

LD2 MERRIMACK BRIDGE SECTIONS.DWG Plotted on 9-Sep-2024 2:52 PM

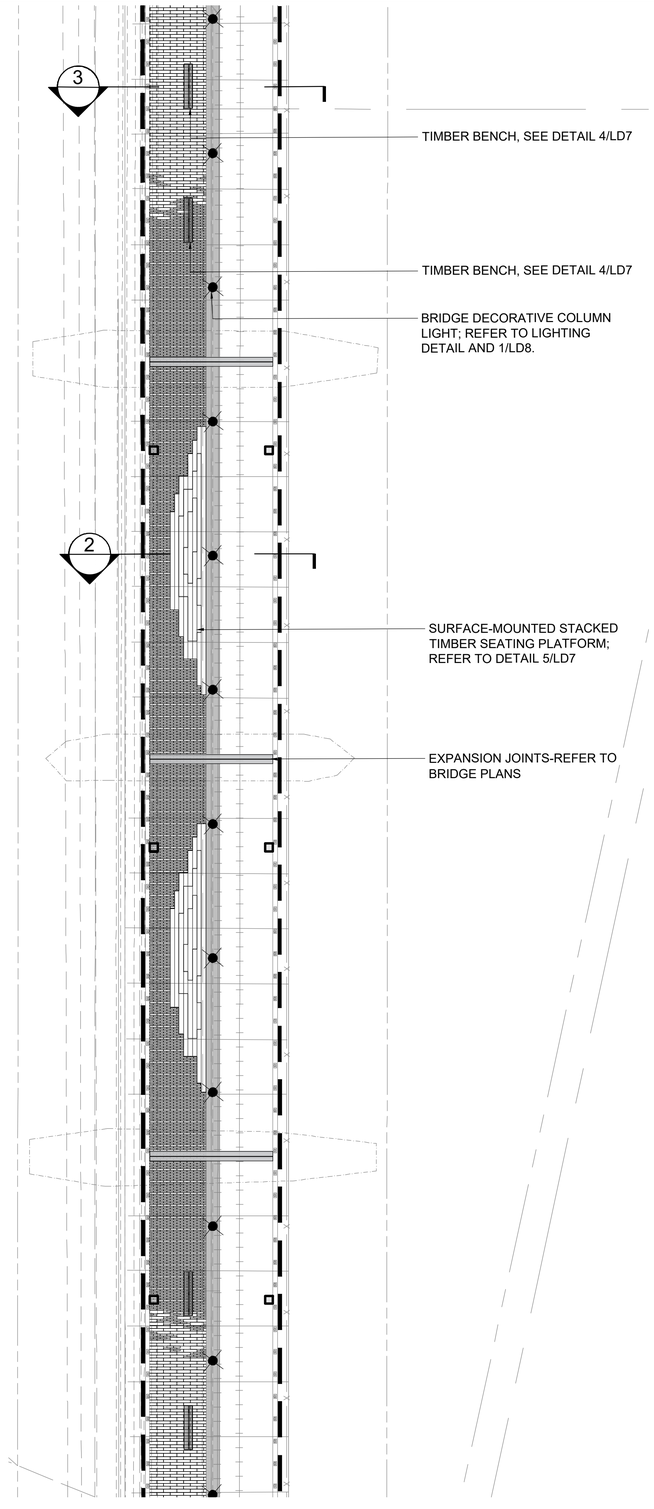

1 MERRIMACK BRIDGE KEY PLAN
Scale: 1/16" = 1'-0"

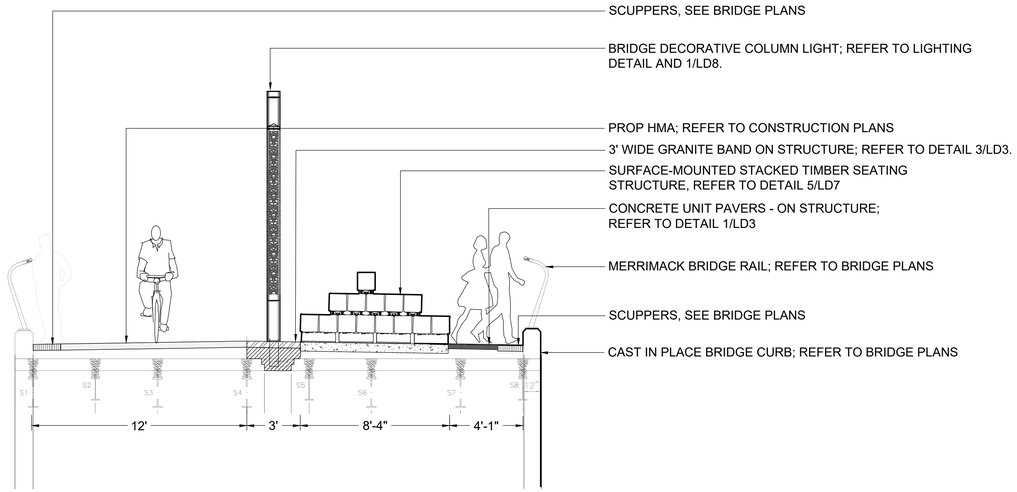

2 MERRIMACK BRIDGE SECTION AT STACKED TIMBER SEATING STRUCTURE
Scale: 1/4" = 1'-0"

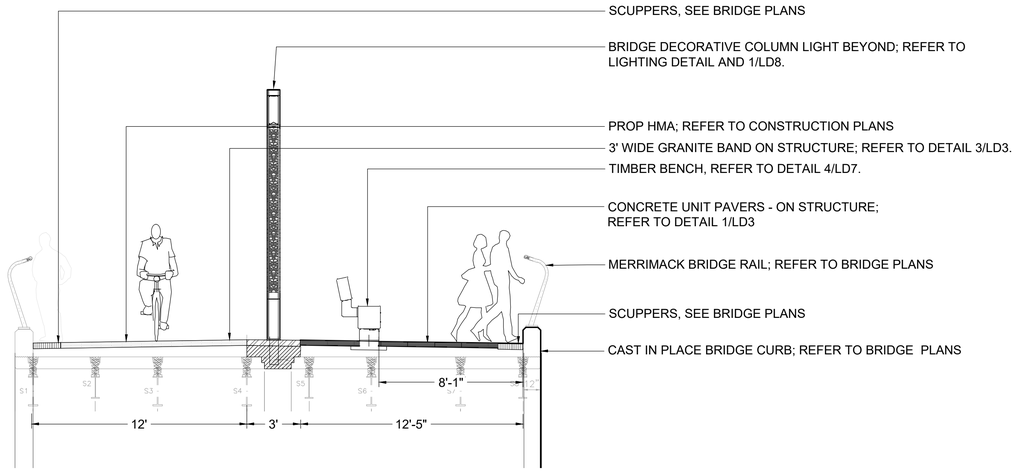

3 MERRIMACK BRIDGE SECTION AT TIMBER BENCH
Scale: 1/4" = 1'-0"

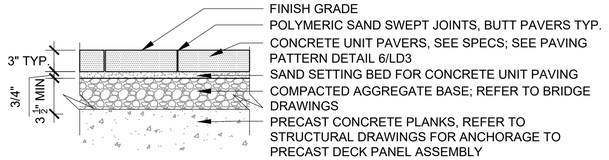

1 CONCRETE UNIT PAVERS - ON STRUCTURE

1 1/2" = 1'-0"

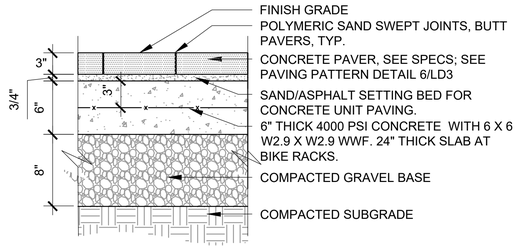

2 CONCRETE UNIT PAVERS - ON GRADE

1 1/2" = 1'-0"

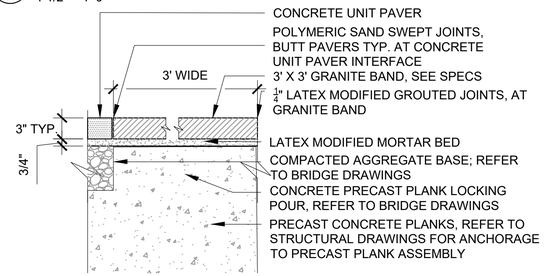

3 GRANITE BAND - ON STRUCTURE

1 1/2" = 1'-0"

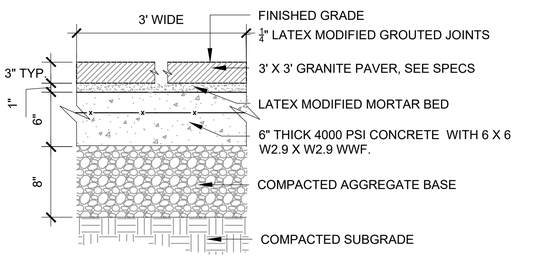

4 GRANITE BAND - ON GRADE

1 1/2" = 1'-0"

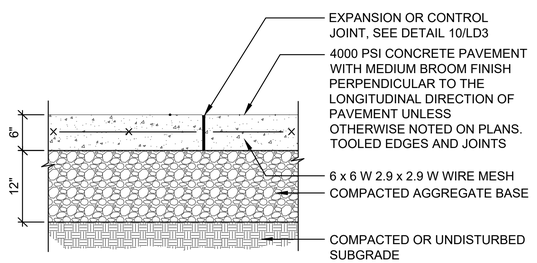

5 CEMENT CONCRETE PAD

1 1/2" = 1'-0"

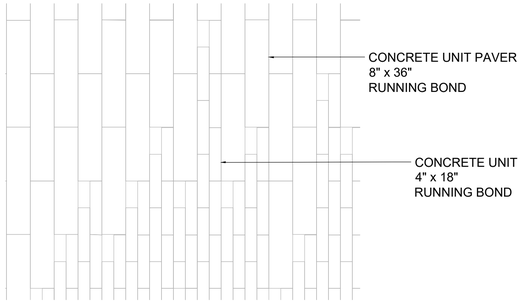

NOTE: DESIGN INTENT IS FOR LARGE AND SMALL PAVER MODULES TO INTERLOCK WITH $\frac{1}{8}$" JOINT BETWEEN ALL UNI T PAVERS. BOTH SIZE PAVERS TO BE LAID IN SAME TWO COLORS IN UNIFORM DISTRIBUTION.

6 CONCRETE PAVER PATTERN

1" = 1'-0"

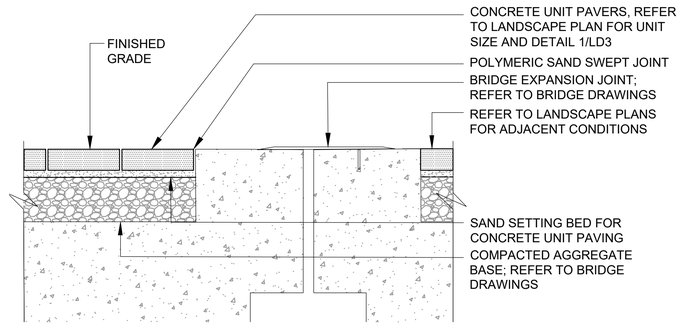

7 CONCRETE UNIT PAVERS AT BRIDGE EXPANSION JOINT

1 1/2" = 1'-0"

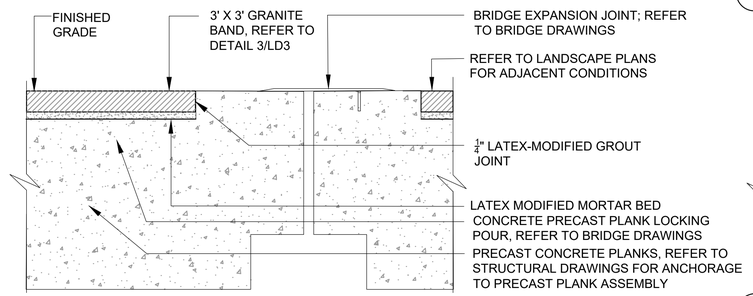

8 GRANITE BAND AT BRIDGE EXPANSION JOINT

1 1/2" = 1'-0"

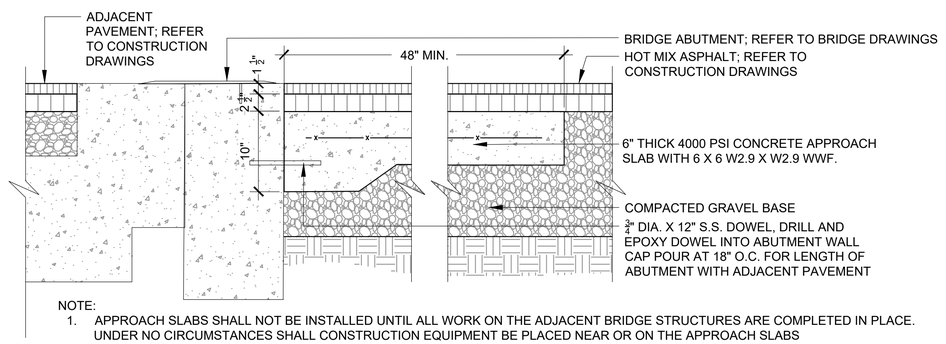

NOTE:
1. APPROACH SLABS SHALL NOT BE INSTALLED UNTIL ALL WORK ON THE ADJACENT BRIDGE STRUCTURES ARE COMPLETED IN PLACE. UNDER NO CIRCUMSTANCES SHALL CONSTRUCTION EQUIPMENT BE PLACED NEAR OR ON THE APPROACH SLABS

9 HMA AT BRIDGE ABUTMENT

1 1/2" = 1'-0"

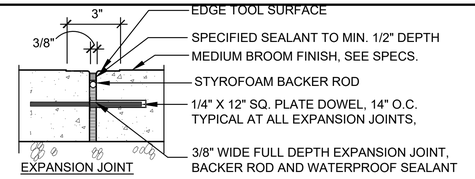

EXPANSION JOINT

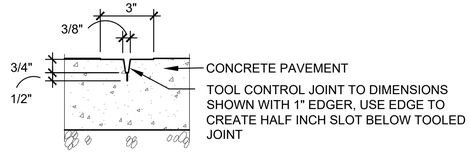

CONTROL JOINT IN PLAIN CONCRETE

NOTE: DOWEL IS TYPICAL AT ALL EJ'S EXCEPT AGAINST VERTICAL JOINTS WITH WALLS, CURBS OR SITE IMPROVEMENTS

INSTALLATION NOTES:

1. SEE PLANS FOR CONTROL JOINTS LOCATIONS.
2. TOOLED PAVEMENT EDGES AND JOINTS, ALL PANELS.

10 EXPANSION AND CONTROL JOINTS

1 1/2" = 1'-0"

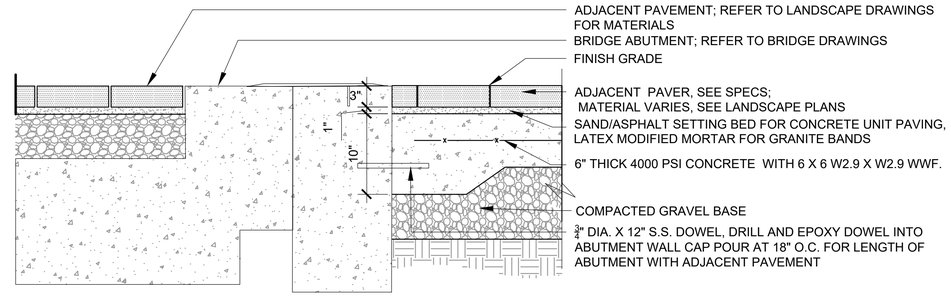

NOTE:
1. APPROACH SLABS SHALL NOT BE INSTALLED UNTIL ALL WORK ON THE ADJACENT BRIDGE STRUCTURES ARE COMPLETED IN PLACE. UNDER NO CIRCUMSTANCES SHALL TEMPORARY CONSTRUCTION EQUIPMENT BE PLACES NEAR OR ON THE APPROACH SLABS

11 UNIT PAVER AT BRIDGE ABUTMENT

1 1/2" = 1'-0"

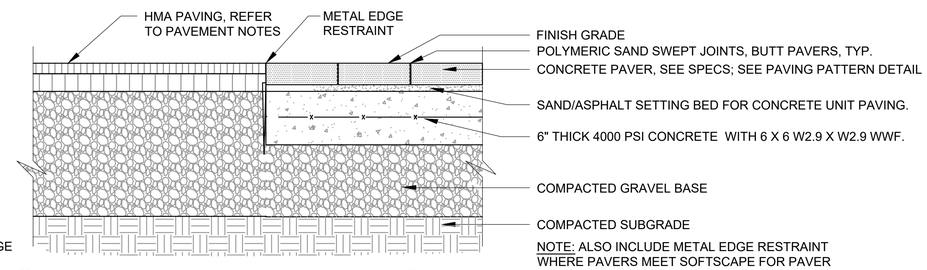

12 CONCRETE UNIT PAVERS AT HMA PAVING

1 1/2" = 1'-0"

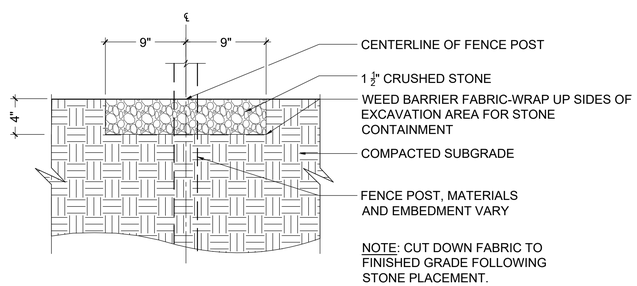

13 GRAVEL MAINTENANCE STRIP

1 1/2" = 1'-0"

LAWRENCE
LMRC RAIL TRAIL

STATE	FED. AID PROJ. NO.	SHEET NO.	TOTAL SHEETS
MA	CMQ-003S(733)X	118	245
PROJECT FILE NO.	608930		

LANDSCAPE DETAILS - 3 OF 8

LD3 PAVING.DWG Plotted on 9-Sep-2024 2:53 PM

LAWRENCE
LMRC RAIL TRAIL

STATE	FED. AID PROJ. NO.	SHEET NO.	TOTAL SHEETS
MA	CMQ-003S(733)X	119	245
PROJECT FILE NO.	608930		

LANDSCAPE DETAILS - 4 OF 8

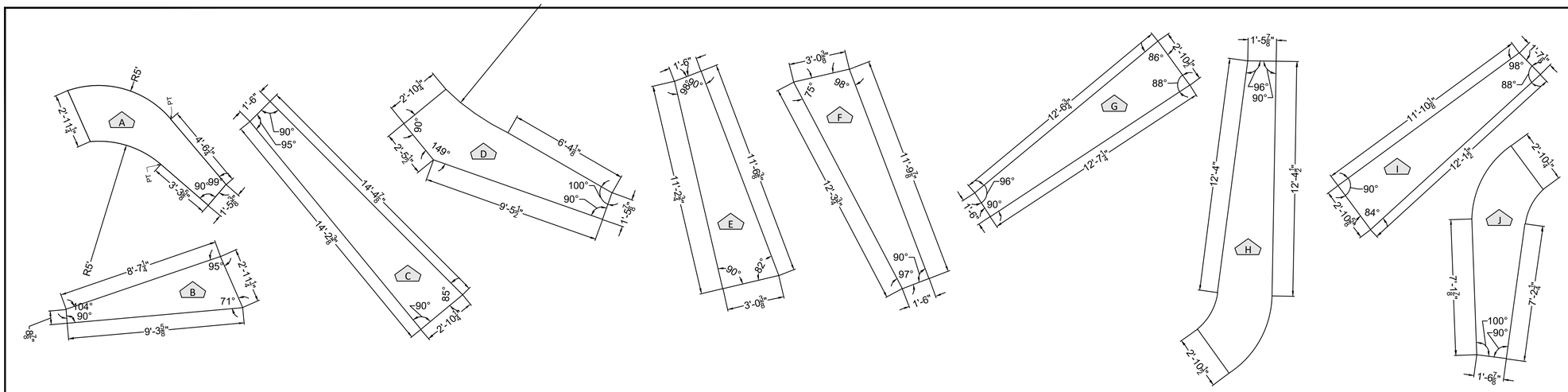

1 SPECIAL CONCRETE SEAT WALL WITH TIMBER SEAT
1/2" = 1'-0"

NOTE: CONTRACTOR SHALL PROVIDE A 3' LONG MOCK-UP TO BE REVIEWED BY ENGINEER, CITY OF LAWRENCE, LA OF RECORD, FOR APPROVAL. MOCK -UP SHALL INCLUDE THE FOLLOWING: PRECAST, FULL FINISH, SEAT TOPPER WITH WOOD AND STEEL FABRICATION.

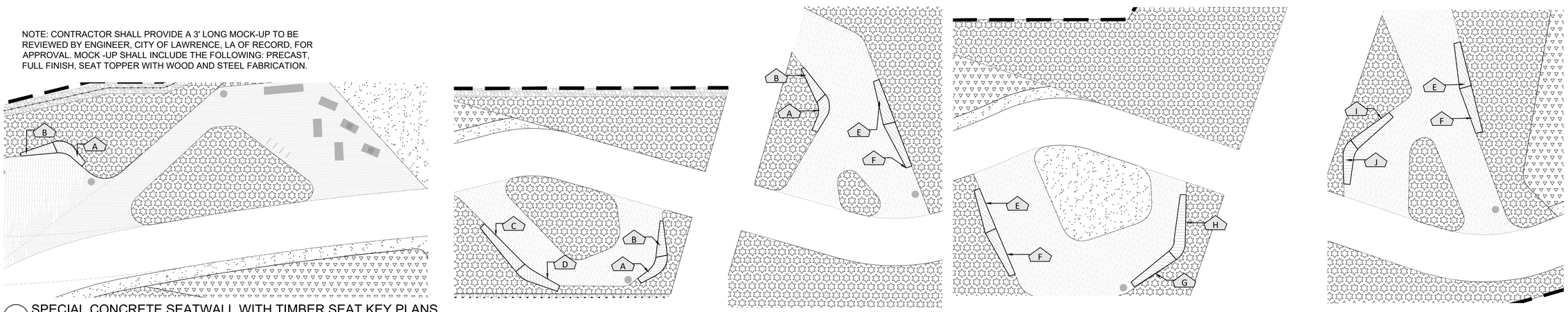

2 SPECIAL CONCRETE SEATWALL WITH TIMBER SEAT KEY PLANS
NTS

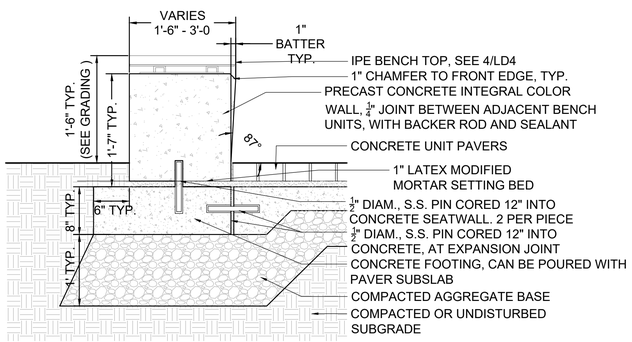

3 SPECIAL CONCRETE SEATWALL WITH TIMBER SEAT; TYPICAL DETAIL

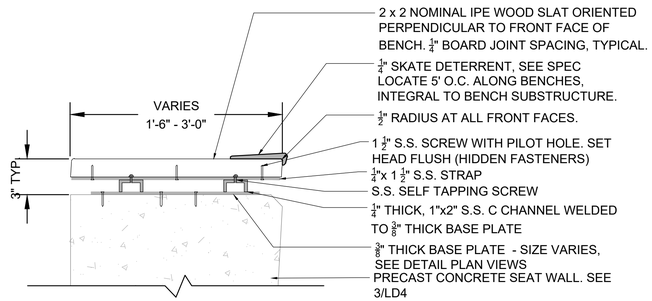

NOTE: PROVIDE SHOP DRAWINGS FOR CONCRETE FORM SHAPES, STAINLESS STEEL BENCH FRAME SHAPES AND DIMENSIONS, TIMBER SEAT SLAT ORIENTATION AND JOINTING LAYOUT, ALL HARDWARE FOR ASSEMBLY.

4 SPECIAL CONCRETE SEATWALL WITH TIMBER SEAT; BENCH TOP DETAIL ENLARGEMENT

LD4 PRECAST SEATWALLS WITH WOOD BENCH.DWG Plotted on 9-Sep-2024 2:53 PM

LAWRENCE
LMRC RAIL TRAIL

STATE	FED. AID PROJ. NO.	SHEET NO.	TOTAL SHEETS
MA	CMQ-003S(733)X	120	245
PROJECT FILE NO.	608930		

LANDSCAPE DETAILS - 5 OF 8

LD5 WIRE MESH FENCE.DWG Plotted on 9-Sep-2024 2:53 PM

DETAIL A - LINE POST CONNECTION

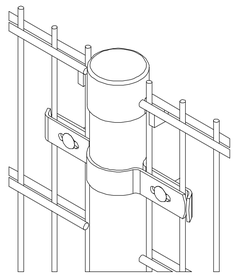

5/16-18 x 1.5 [38]
CARRIAGE BOLT

DETAIL B - CORNER POST CONNECTION

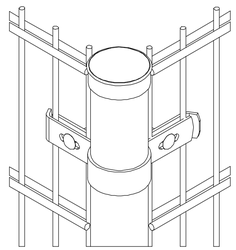

NOTE: FOR CORNERS THAT ARE NOT 90 DEGREES USE TWO END BRACKETS (STACKED)

DETAIL C - END POST CONNECTION

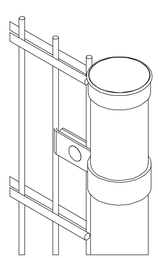

DETAIL D - PANEL CONNECTION DETAIL (LINE POST SHOWN)

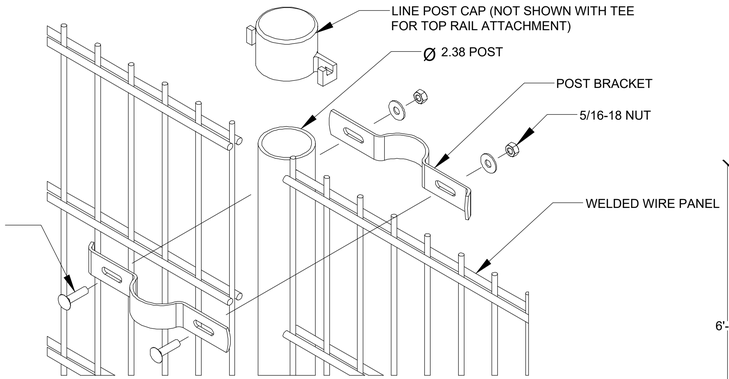

DETAIL E - WIRE MESH DIMENSIONS

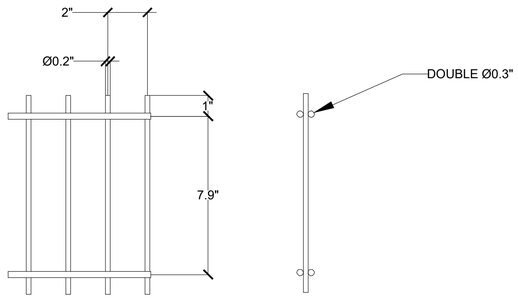

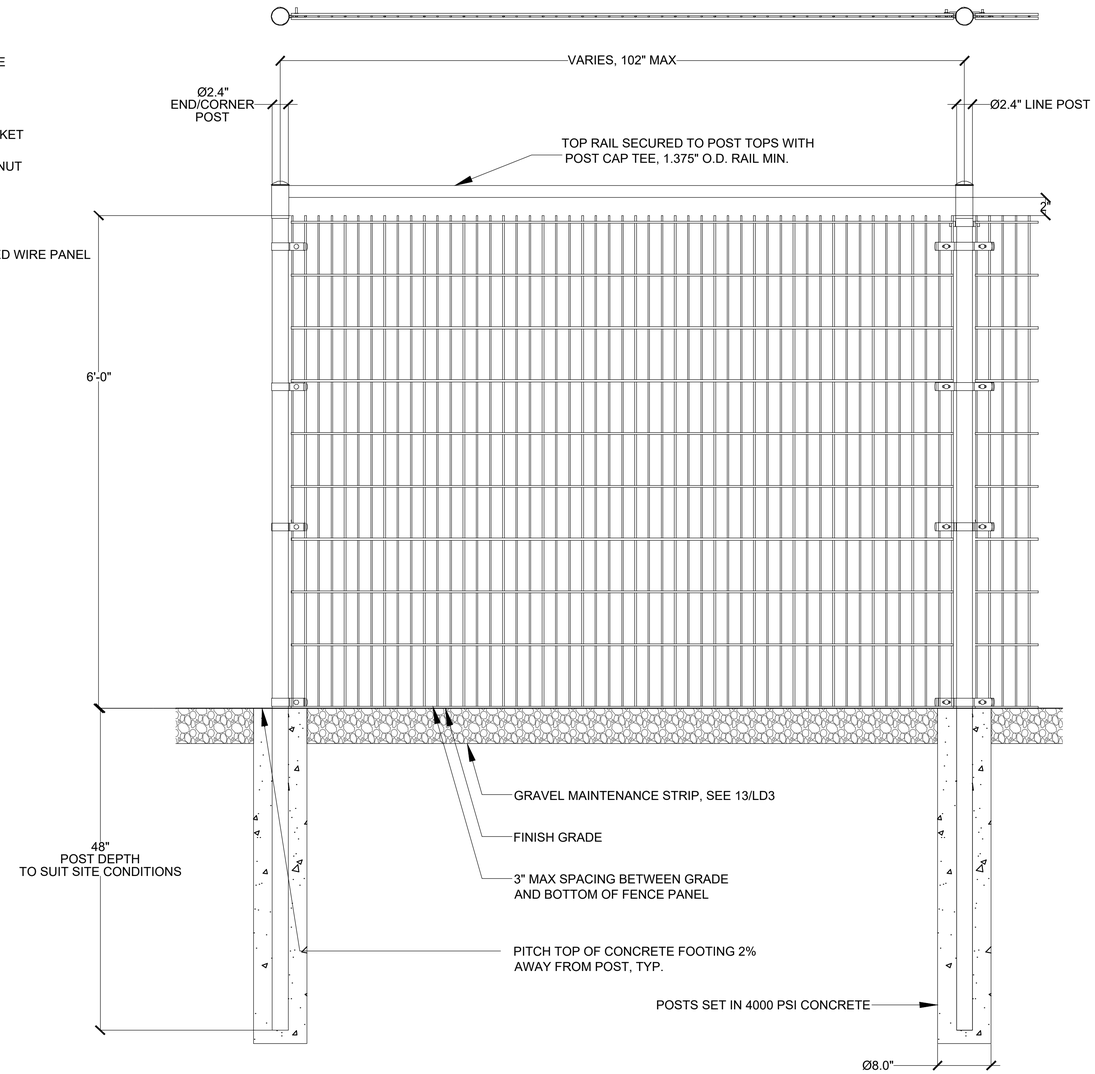

NOTES:
1. ALL METAL FENCE COMPONENTS SHALL BE HOT DIP GALVANIZED AND POWDER COATED
2. POSTS, RAILS AND CAPS SHALL BE CUSTOM POWDERCOAT COLOR 1-REFER TO SPECIFICATIONS
3. WELDED WIRE PANELS, BRACKETS, AND HARDWARE SHALL BE CUSTOM POWDERCOAT COLOR 2-REFER TO SPECIFICATIONS
4. FULL SHOP DRAWINGS REQUIRED
5. SAMPLES REQUIRED INCLUDING MATERIAL AND COLOR SAMPLES
6. PROVIDE ADJUSTABLE BRACKET FOR ATTACHMENT OF TOP RAIL AT CORNERS

1 VERTICAL WELDED WIRE FENCE
NTS

TYPE 1 - FRONT

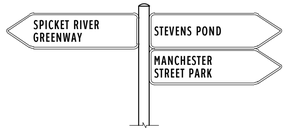

TYPE 2 - FRONT

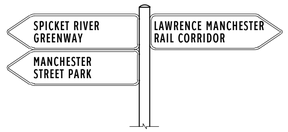

TYPE 1 - BACK

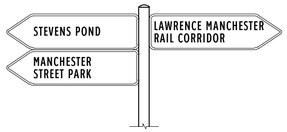

TYPE 2 - BACK

TYPE 3 - FRONT

TYPE 4 - FRONT

TYPE 3 - BACK

TYPE 4 - BACK

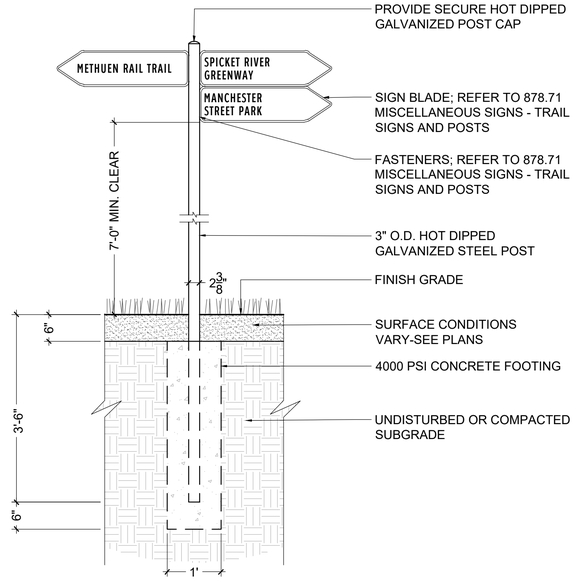

POST INSTALLATION

LAWRENCE
LMRC RAIL TRAIL

STATE	FED. AID PROJ. NO.	SHEET NO.	TOTAL SHEETS
MA	CMQ-003S(733)X	121	245
PROJECT FILE NO.	608930		

LANDSCAPE DETAILS - 6 OF 8

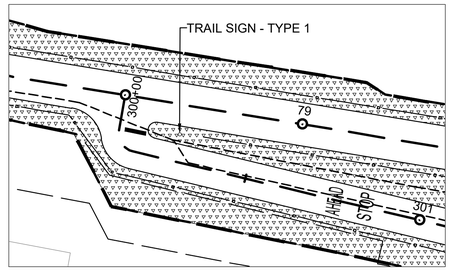

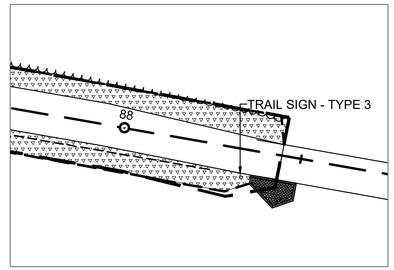

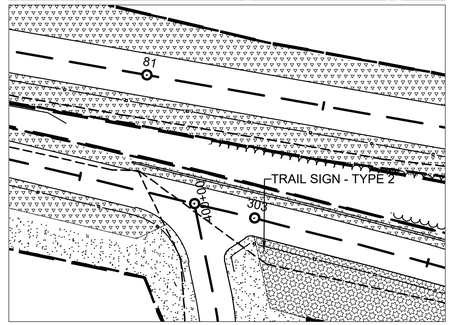

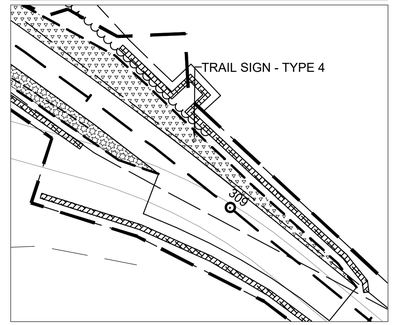

TRAIL SIGN - KEY PLANS

1 TRAIL SIGN
NTS

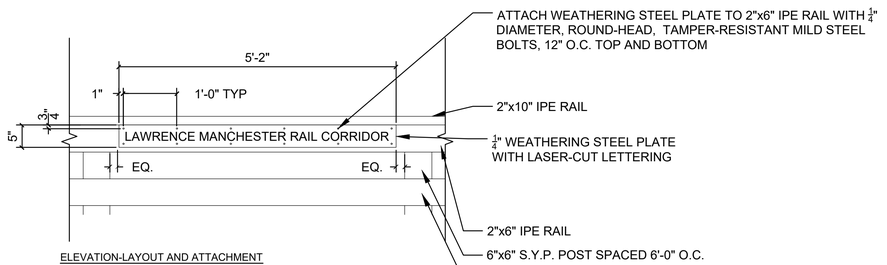

ELEVATION-LAYOUT AND ATTACHMENT

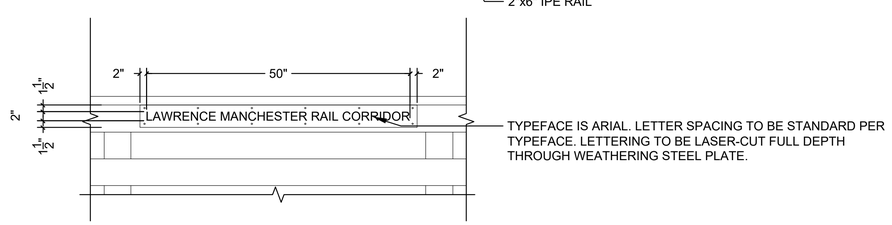

ELEVATION-TEXT

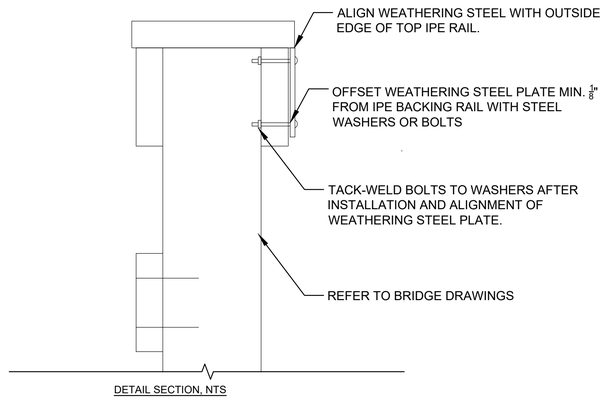

DETAIL SECTION, NTS

2 BRIDGE RAIL TRAIL SIGN
NTS

LAWRENCE
LMRC RAIL TRAIL

STATE	FED. AID PROJ. NO.	SHEET NO.	TOTAL SHEETS
MA	CMQ-003S(733)X	122	245
PROJECT FILE NO.	608930		

LANDSCAPE DETAILS - 7 OF 8

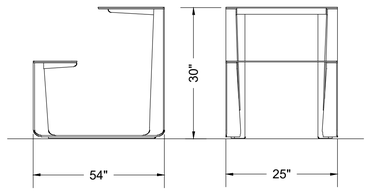

1 TABLE AND CHAIRS (FIXED)
NTS

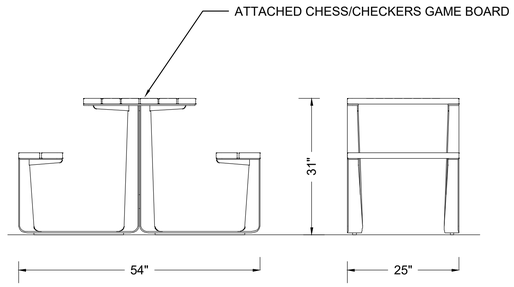

2 GAMING TABLE AND CHAIRS (FIXED)
NTS

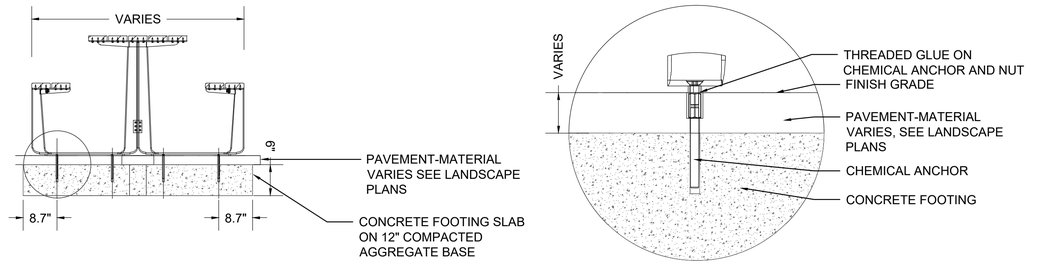

3 TABLE MOUNTING DETAIL
NTS

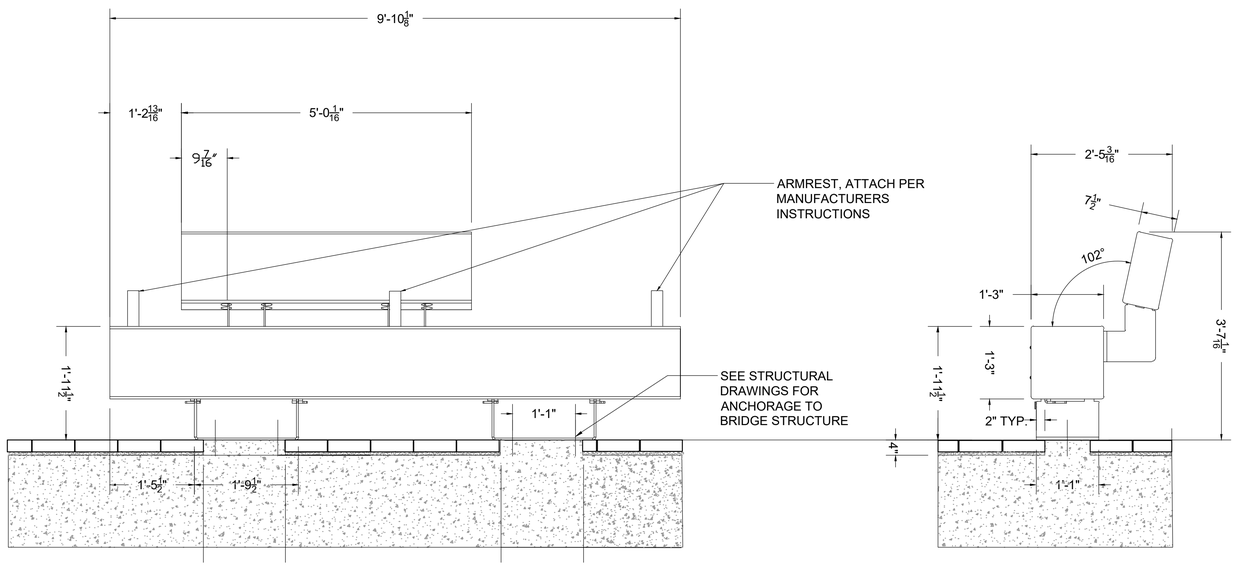

4 TIMBER BENCH
NTS

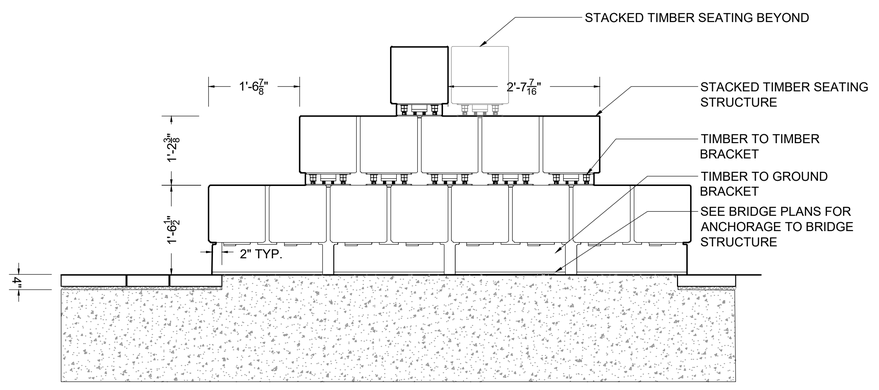

5 STACKED TIMBER SEATING STRUCTURE
NTS

LAWRENCE
LMRC RAIL TRAIL

STATE	FED. AID PROJ. NO.	SHEET NO.	TOTAL SHEETS
MA	CMQ-003S(733)X	123	245
PROJECT FILE NO.	608930		

LANDSCAPE DETAILS - 8 OF 8

LD8 SITE IMPROVEMENTS.DWG Plotted on 9-Sep-2024 2:56 PM

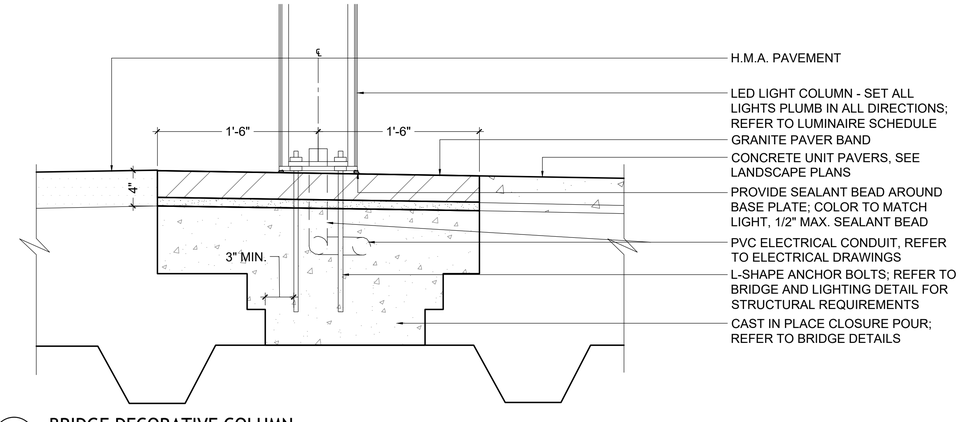

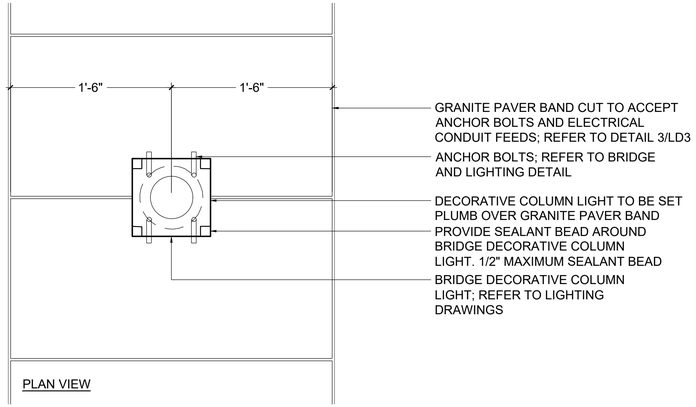

1 BRIDGE DECORATIVE COLUMN
SCALE: 1 1/2" = 1' - 0"

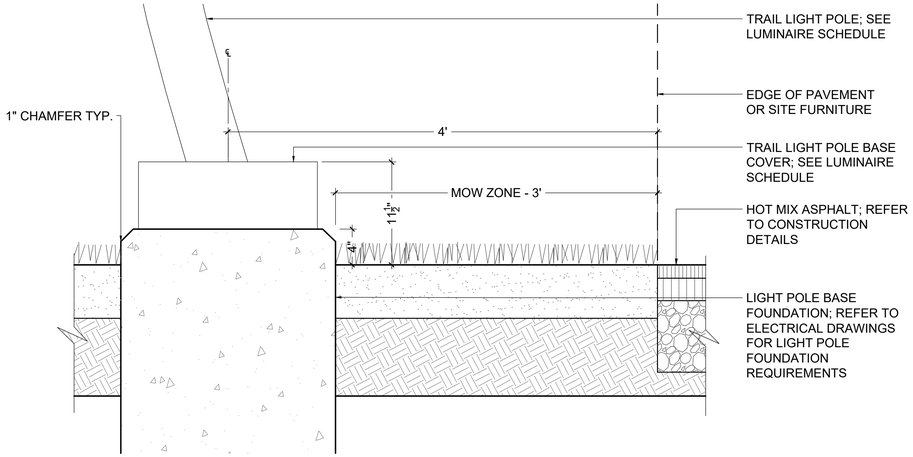

2 TRAIL PATH LIGHT
SCALE: 1 1/2" = 1' - 0"

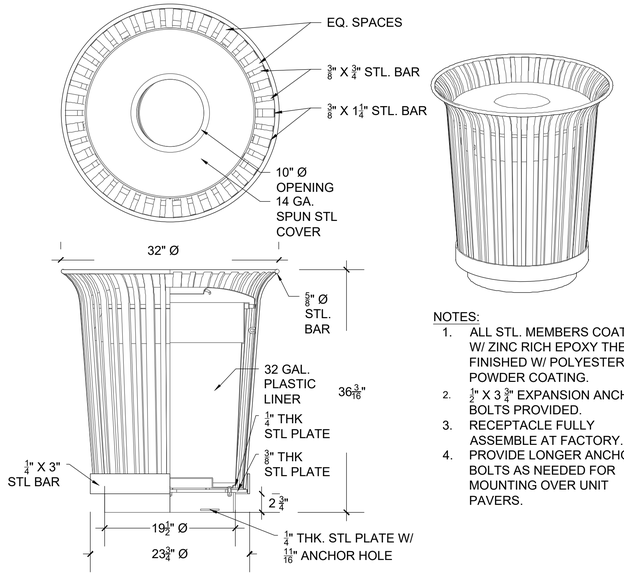

NOTES:
1. ALL STL. MEMBERS COATED W/ ZINC RICH EPOXY THEN FINISHED W/ POLYESTER POWDER COATING.
2. ½" X 3 ¾" EXPANSION ANCHOR BOLTS PROVIDED.
3. RECEPTACLE FULLY ASSEMBLE AT FACTORY.
4. PROVIDE LONGER ANCHOR BOLTS AS NEEDED FOR MOUNTING OVER UNIT PAVERS.

4 TRASH RECEPTACLE
SCALE: NTS

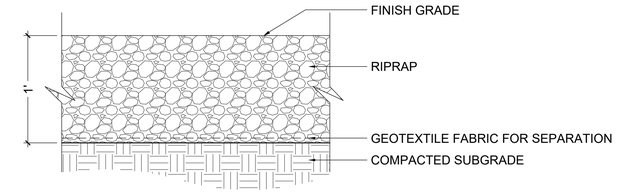

6 DUMPED RIPRAP
SCALE: 1 1/2" = 1' - 0"

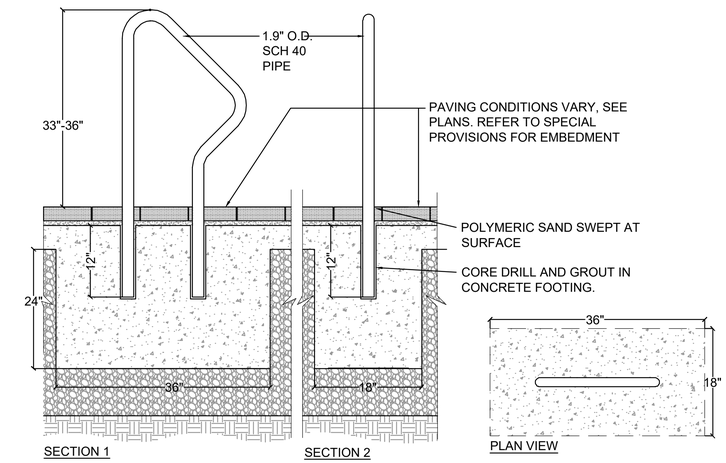

3 BICYCLE RACK
1" = 1'-0"

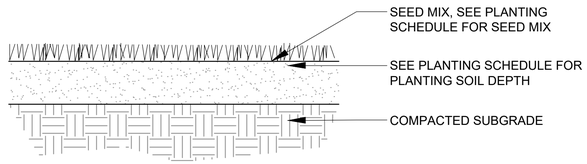

5 SEED PLANTING
SCALE: NTS

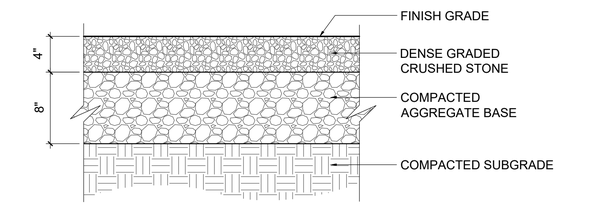

7 GRAVEL SURFACE
SCALE: 1 1/2" = 1' - 0"

LAWRENCE
LMRC RAIL TRAIL

STATE	FED. AID PROJ. NO.	SHEET NO.	TOTAL SHEETS
MA	CMQ-003S(733)X	124	245
	PROJECT FILE NO.	608930	

WETLAND DETAILS - 1 OF 1

608930_HD10(CONSTRUCTION DETAILS).DWG Plotted on 6-Sep-2024 11:36 AM

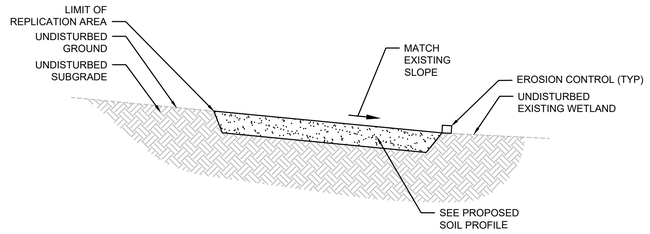

WETLAND REPLICATION AREA

N.T.S.

REPLICATION AREA CONSTRUCTION SEQUENCING

THE FOLLOWING IS A PROPOSED SEQUENCE OF CONSTRUCTION FOR THE COMPLETION OF THE WETLAND REPLICATION:

1. A PRE-CONSTRUCTION CONFERENCE WITH THE CONTRACTOR AND A QUALIFIED WETLAND SPECIALIST SHALL BE CONDUCTED TO ENSURE ALL ASPECTS OF THE PROJECT, AS WELL AS ANY ORDER OF CONDITIONS ARE UNDERSTOOD. EQUIPMENT NEEDS AND ACCESS ROUTES TO THE PROPOSED REPLICATION AREA SHALL BE FIRMLY ESTABLISHED.
2. EROSION CONTROL BARRIERS SHALL BE INSTALLED ALONG THE EXISTING WETLAND EDGE OF THE REPLICATION AREAS. THE EROSION CONTROL BARRIERS SHALL ALSO SERVE AS A LIMIT OF WORK.
3. VEGETATION SHALL BE CLEARED FROM THE REPLICATION AREA AND ANY INVASIVE SPECIES SHALL BE PROPERLY REMOVED AND DISPOSED.
4. CONTRACTOR SHALL EXCAVATE TO APPROXIMATELY 26 INCHES BELOW FINAL GRADE.
5. SOIL SHALL BE INSTALLED TO AN ELEVATION APPROXIMATELY 12 INCHES BELOW FINAL GRADE. ALL EXCAVATION EQUIPMENT OPERATING WITHIN THE REPLICATION AREA SHALL BE ON TRACKS TO REDUCE SOIL COMPACTION. MACHINE MOVEMENT SHALL BE MINIMIZED TO THE EXTENT PRACTICABLE.
6. ROUGH GRADES SHALL BE VERIFIED BY FIELD SURVEY TO CONFIRM DESIGN ELEVATIONS HAVE BEEN MET. ADJUSTMENTS SHALL BE MADE AS APPROPRIATE.
7. 12-16" OF THE NATURALLY OCCURRING EXCAVATED B SOILS SHALL BE PLACED ON SUBGRADE IN ONE LOOSE LIFT. TOP SOIL LAYER SHALL CONSIST OF 12" OF CLEAN LOAM WITH A MINIMUM OF 15% ORGANIC MATTER CONTENT BY DRY WEIGHT OR 50% BY VOLUME. LEAF COMPOST SHALL BE USED TO AMEND LOAM TO ACHIEVE DESIRED ORGANIC MATTER CONTENT.
8. THE REPLICATION AREAS SHALL BE GENTLY COMPACTED AND HAND RAKED TO ENHANCE SURFACE WATER RETENTION. SPOT ELEVATIONS SHALL BE TAKEN AGAIN TO CONFIRM DESIGN ELEVATIONS.
9. A WETLAND SEED MIX SHALL BE HAND SOWN AS AN UNDERSTORY COVER TO PROVIDE SHORT-TERM EROSION CONTROL, WILDLIFE FOOD, AND COVER, AND TO DISCOURAGE THE ESTABLISHMENT OF INVASIVE, NON-NATIVE SPECIES SUCH AS PURPLE LOOSESTRIFE (*LYTHRUM SALICARIA*) AND COMMON REED (*PHRAGMITES AUSTRALIS*).
10. THE REPLICATION AREA SHALL BE MONITORED IN ACCORDANCE WITH ANY ENFORCEMENT ORDER ISSUED FOR THIS PROJECT BY THE LAWRENCE CONSERVATION COMMISSION.

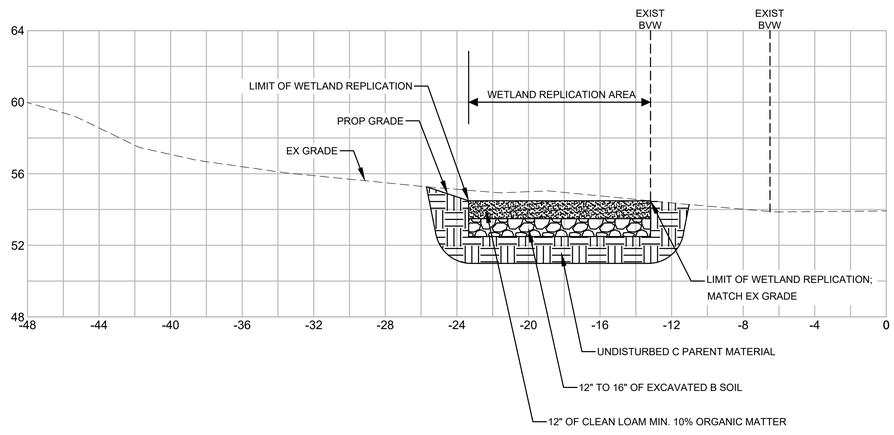

WETLAND REPLICATION AREA PROFILE

LAWRENCE
LMRC RAIL TRAIL

STATE	FED. AID PROJ. NO.	SHEET NO.	TOTAL SHEETS
MA	CMQ-003S(733)X	125	245
PROJECT FILE NO.	608930		

CONSTRUCTION DETAILS - 1 OF 5

608930_HD10(CONSTRUCTION DETAILS).DWG Plotted on 6-Sep-2024 11:37 AM

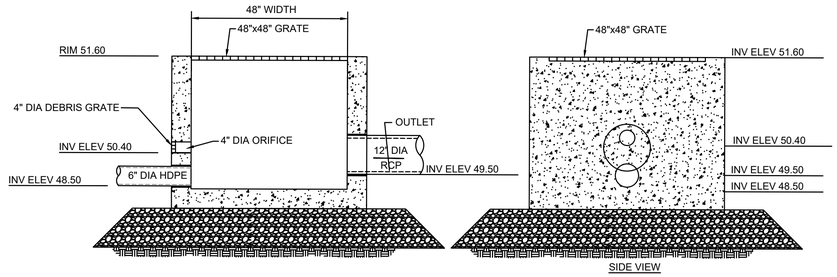

NOTES:
1. STRUCTURE SHALL BE 48"x48" (INNER DIMENSIONS) PRECAST CONCRETE BOX STRUCTURE
2. ALL SECTIONS SHALL BE DESIGNED FOR HS-20 LOADING.
3. PROVIDE "V" KNOCKOUTS FOR PIPES WITH 2" MAX CLEARANCE TO OUTSIDE OF PIPE. MORTAR ALL PIPE CONNECTIONS.
4. JOINT SEALANT BETWEEN PRECAST SECTIONS SHALL BE PREFORMED BUTYL RUBBER.

OUTLET CONTROL STRUCTUE 5 (OCS 5) DETAIL
N.T.S.

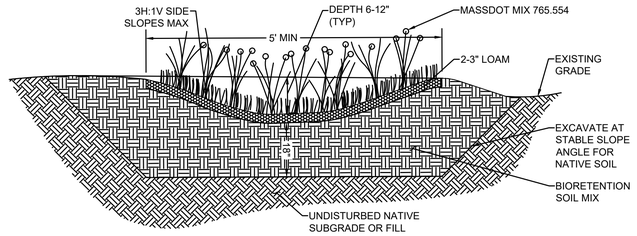

DRAINAGE SWALE DETAIL
N.T.S.

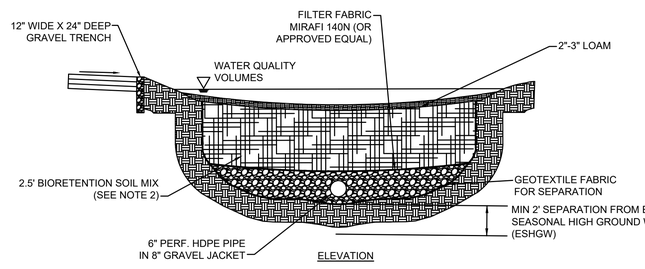

NOTES:

1. UNDERDRAIN PIPING SHOULD BE SET IN 1 TO 2-INCH DIAMETER STONE OR GRAVEL WASHED FREE OF FINES AND ORGANIC MATERIAL.

2. BIORETENTION SOIL MIX SHALL BE I ACCORDANCE WITH ITEM 751.999 OF THE SPECIAL PROVISIONS

BIORETENTION BASIN LAYOUT
N.T.S.

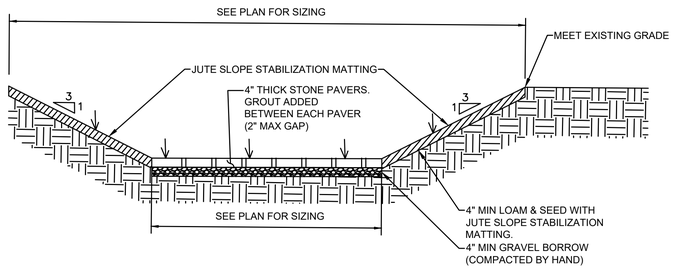

SEDIMENT FOREBAY TYPICAL CROSS SECTION
N.T.S.

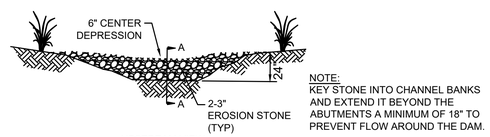

UPSTREAM VIEW

NOTE:
KEY STONE INTO CHANNEL BANKS AND EXTEND IT BEYOND THE ABUTMENTS A MINIMUM OF 18" TO PREVENT FLOW AROUND THE DAM.

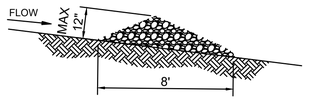

SECTION A-A

L = THE DISTANCE SUCH THAT POINTS A AND B ARE OF EQUAL ELEVATION

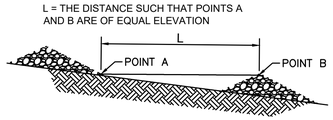

CHECK DAM SPACING

STONE CHECK DAM
N.T.S.

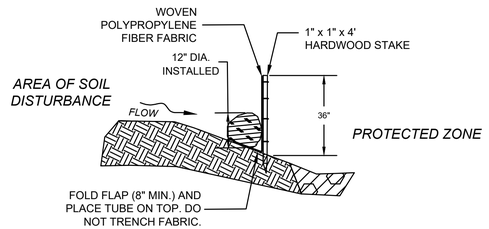

SECTION

COMPOST FILTER TUBE & SILT FENCE
N.T.S.

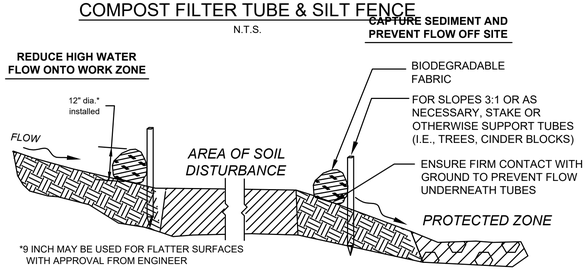

SECTION

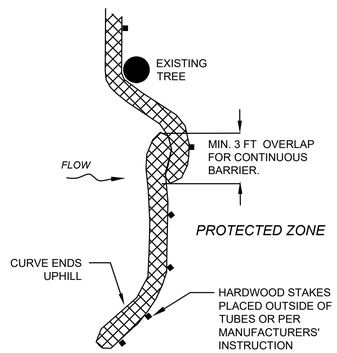

PLACE TUBE ALONG CONTOURS AND PERPENDICULAR TO FLOW.

PLACE AS CLOSE TO LIMIT OF SOIL DISTURBANCE AS POSSIBLE

ADJUST LOCATION AS REQUIRED FOR OPTIMUM EFFECTIVENESS. DO NOT INSTALL IN WATERWAYS.

PLACE STAKES AS NEEDED TO SECURE TUBES IN PLACE.

PLAN VIEW

SEDIMENT CONTROL BARRIER
N.T.S.

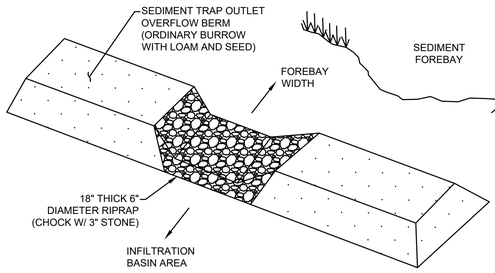

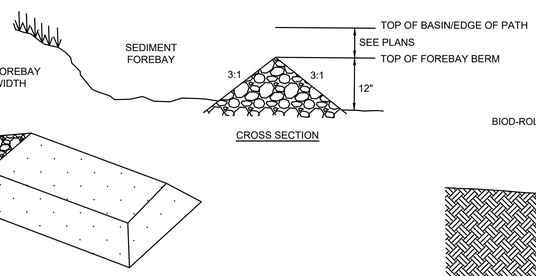

CROSS SECTION

SEDIMENT FOREBAY OUTLET DETAIL
N.T.S.

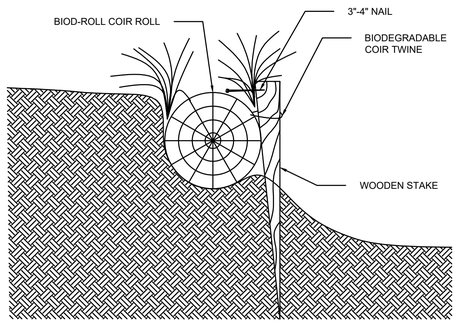

NOTES:
1. CLEAR AREA OF ANY DEBRIS, TREES, ROCKS OR LARGE OBSTRUCTIONS PRIOR TO INSTALLATION.
2. LOGS ARE PLACED IN A SMALL PRE-DUG TRENCH ALONG BASIN BANK.
3. COIR LOGS ARE CONSTRUCTED FROM CYLINDER/ROUND SHAPE COIR NETTING PACKED WITH BIODEGRADABLE COIR FIBER.
4. LOGS ARE SECURED INTO POSITION USING WOODEN STAKES, COIR TWINE AND A NAIL.
5. ADJACENT LOGS ARE TIED TOGETHER END TO END USING COIR TWINE.

COIR LOG
N.T.S.

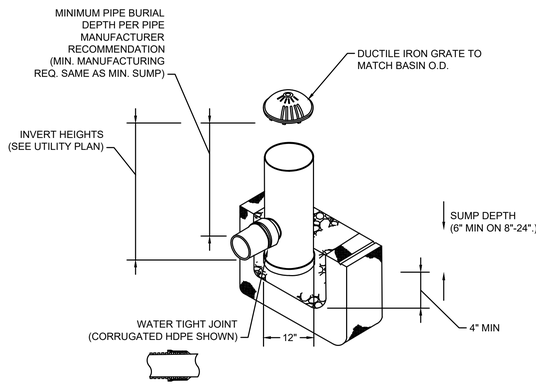

"BEEHIVE" DRAIN (OCS 10) DETAIL
N.T.S.

STATE	FED. AID PROJ. NO.	SHEET NO.	TOTAL SHEETS
MA	CMQ-003S(733)X	126	245
PROJECT FILE NO.	608930		

CONSTRUCTION DETAILS - 2 OF 5

608930_HD10(CONSTRUCTION DETAILS).DWG Plotted on 6-Sep-2024 8:55 AM

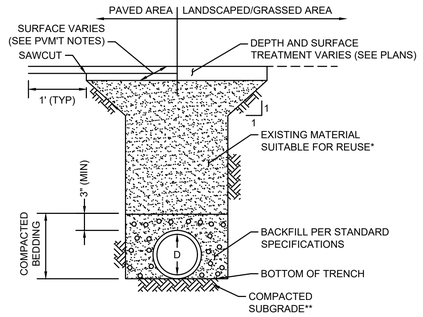

NOTES:

* EXISTING MATERIAL OBTAINED FROM EXCAVATION THAT IS DETERMINED TO BE SUITABLE, AND APPROVED BY THE ENGINEER SHALL BE USED. BACKFILL SHALL BE PLACED IN LAYERS NO MORE THAN 6" IN DEPTH AND THOROUGHLY COMPACTED. BACKFILLING TO A POINT 2' OVER THE PIPE SHALL CONTAIN NO STONES LARGER THAN 3".

**SOFT OR UNSUITABLE MATERIAL EXISTING BELOW THE REQUIRED BEDDING GRADE SHALL BE REMOVED AS DIRECTED AND REPLACED WITH SAND, GRAVEL, CRUSHED STONE OR OTHER SUITABLE MATERIAL AND THOROUGHLY COMPACTED.

UTILITY TRENCH

N.T.S.

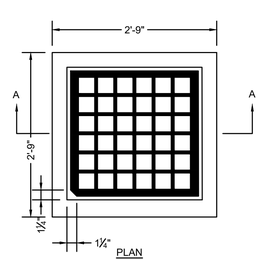

NOTES:

1. FRAME AND COVER SHALL BE RATED FOR HL-93 LOADING.
2. MATERIAL - CAST IRON.
3. MINIMUM FRAME WEIGHT:
   4 FLANGE - 295 LB
   3 FLANGE - 264 LB

CATCH BASIN FRAME & GRATE (MUNICIPAL STANDARD)

N.T.S.

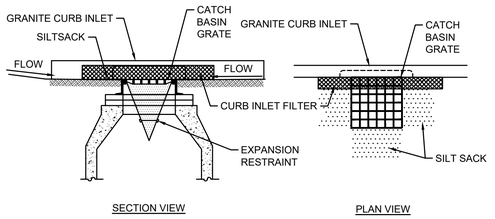

NOTES:

1. INSTALL SILT SACK IN EXISTING CATCH BASINS BEFORE COMMENCING WORK, AND IN NEW CATCH BASINS IMMEDIATELY AFTER INSTALLATION OF STRUCTURE. MAINTAIN UNTIL BINDER COURSE PAVING IS COMPLETE OR A PERMANENT STAND OF GRASS HAS BEEN ESTABLISHED.
2. GRATE TO BE PLACED OVER SILT SACK.
3. SILT SACK SHALL BE INSPECTED PERIODICALLY AND AFTER ALL STORM EVENTS AND CLEANING OR REPLACEMENT SHALL BE PERFORMED PROMPTLY AS NEEDED.

INLET PROTECTION SILT SACK IN CATCH BASIN WITH CURB INLET

N.T.S.

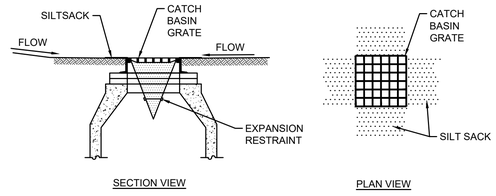

NOTES:

1. INSTALL SILT SACK IN EXISTING CATCH BASINS BEFORE COMMENCING WORK, AND IN NEW CATCH BASINS IMMEDIATELY AFTER INSTALLATION OF STRUCTURE. MAINTAIN UNTIL BINDER COURSE PAVING IS COMPLETE OR A PERMANENT STAND OF GRASS HAS BEEN ESTABLISHED.
2. GRATE TO BE PLACED OVER SILT SACK.
3. SILT SACK SHALL BE INSPECTED PERIODICALLY AND AFTER ALL STORM EVENTS AND CLEANING OR REPLACEMENT SHALL BE PERFORMED PROMPTLY AS NEEDED.

INLET PROTECTION SILT SACK IN CATCH BASIN

N.T.S.

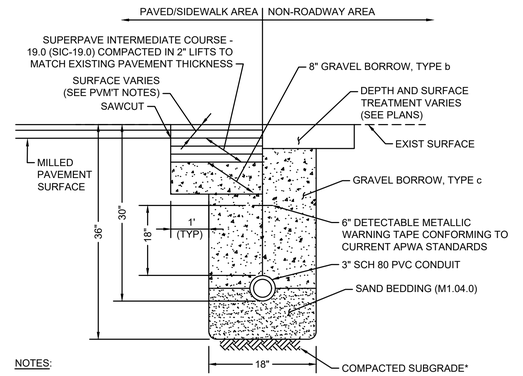

NOTES:

* SOFT OR UNSUITABLE MATERIAL EXISTING BELOW THE REQUIRED BEDDING GRADE SHALL BE REMOVED AS DIRECTED AND REPLACED WITH SAND, GRAVEL, CRUSHED STONE OR OTHER SUITABLE MATERIAL AND THOROUGHLY COMPACTED.

CONDUIT TRENCH

N.T.S.

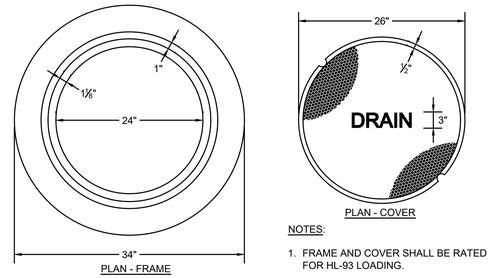

NOTES:

1. FRAME AND COVER SHALL BE RATED FOR HL-93 LOADING.
2. MATERIAL - CAST IRON.
3. MINIMUM MASS - 265 LBS.
4. ALL MH FRAMES AND COVERS SHALL BE ADA AND AAB COMPLIANT.
5. MANHOLE COVERS SHALL HAVE A DIAMOND PATTERN, PICK HOLES, AND THE WORD "DRAIN" OR "SEWER" CAST IN 3-INCH LETTERS.

MANHOLE FRAME & COVER

N.T.S.

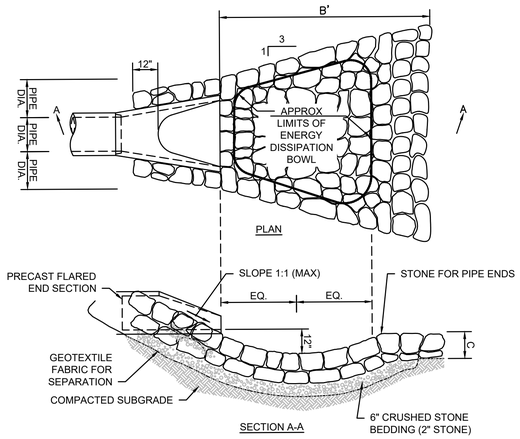

NOTE:
SEE PLANS FOR STONE LENGTH AND DEPTH

STONE AT FLARED END SECTION

N.T.S.

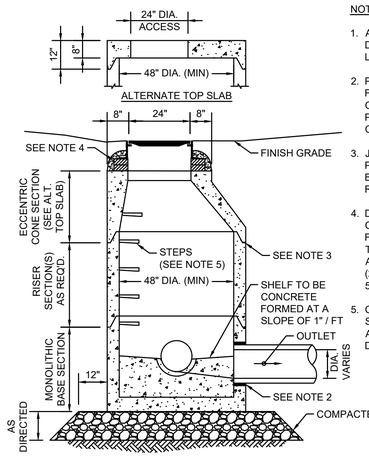

NOTES:

1. ALL SECTIONS SHALL BE DESIGNED FOR HL-93 LOADING.
2. PROVIDE "V" KNOCKOUTS FOR PIPES WITH 2" MAX CLEARANCE TO OUTSIDE OF PIPE. MORTAR ALL PIPE CONNECTIONS.
3. JOINT SEALANT BETWEEN PRECAST SECTIONS SHALL BE PREFORMED BUTYL RUBBER.
4. DRAIN MANHOLE FRAME AND COVER SHALL BE SET IN FULL MORTAR BED. ADJUST TO GRADE WITH CLAY BRICK AND MORTAR. (2 COURSES TYP 5 COURSES MAX)
5. COPOLYMER MANHOLE STEPS SHALL BE INSTALLED AT 12" O.C. FOR THE FULL DEPTH OF THE STRUCTURE.

DRAIN MANHOLE

N.T.S.

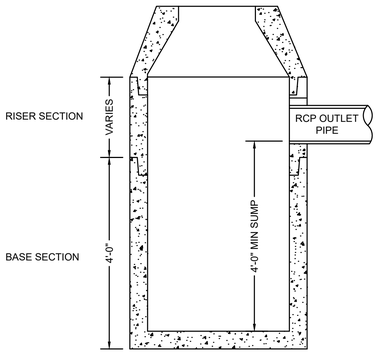

NOTE:

ALL CATCH BASINS SHALL CONFORM TO MASSDOT CONSTRUCTION STANDARD E 201.4.0 EXCEPT FOR 4' SUMP DEPTH AS SHOWN

DEEP SUMP CATCH BASIN

N.T.S.

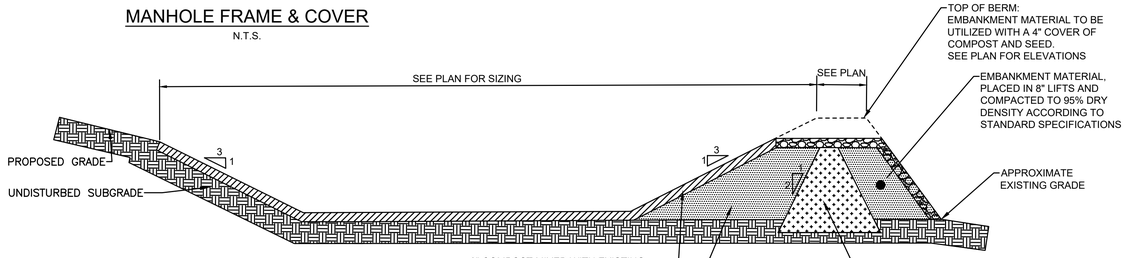

BERM MATERIALS (SEE SPECIAL NOTE BELOW)

1) IMPERVIOUS CORE (CLAY SILT & SAND SHALL CONFORM TO AASHTO T27 HAVING A COEFFICIENT OF PERMEABILITY OF 1 X 10 CM/SEC AND MEET THE GRADATION AS FOLLOWS:
ROLLED TO 6 LAYERS (95% COMPACTION)

PERCENT FINER	SIEVE SIZE
100	#4
30 TO 85	#40
20 TO 50	#200

2) FILTER LAYER F2
EMBANKMENT MATERIAL SHALL CONFORM TO AASHTO M57 AND MEET THE FOLLOWING GRADATION:

PERCENT FINER	SIEVE SIZE
100	3 IN.
95-100	2 IN.
55-85	1 IN.
27-52	#4
50 MAX	#40
25 MAX	#200

NOTES:

1. PROPOSED GRADING AND LAYOUT OF BASIN TO MATCH DESIGN SHOWN IN THE CONSTRUCTION PLANS AND CROSS SECTION PLANS.
2. SUBSURFACE SOILS TO MATCH MATERIALS SPECIFIED WITHIN THE INFILTRATION BASIN SPECIFICATION AND LANDSCAPE PLANS.
3. ALL PLANTINGS SHALL BE WILL BE CONSIDERED WELL-ESTABLISHED FOLLOWING APPROVAL FROM THE ENGINEER AND MASSDOT LANDSCAPE ARCHITECT AFTER A MINIMUM OF FULL GROWING SEASON FOLLOWING PLANTING.

*** SPECIAL NOTE ***
SPECIAL MATERIALS 1, 2 AND ANTI-SEEP COLLARS CAN BE ELIMINATED AND REPLACED WITH GENERAL MATERIALS IN AREAS OF OVERALL EMBANKMENT CUT AND IN AREAS WHERE THE GEOTECHNICAL & CITY ENGINEERS DETERMINE THAT FIELD CONDITIONS DO NOT WARRANT THESE ITEMS.

INFILTRATION BASIN

N.T.S.

LAWRENCE
LMRC RAIL TRAIL

STATE	FED. AID PROJ. NO.	SHEET NO.	TOTAL SHEETS
MA	CMQ-003S(733)X	127	245
PROJECT FILE NO.	608930		

CONSTRUCTION DETAILS - 3 OF 5

608930_HD10(CONSTRUCTION DETAILS).DWG Plotted on 6-Sep-2024 8:56 AM

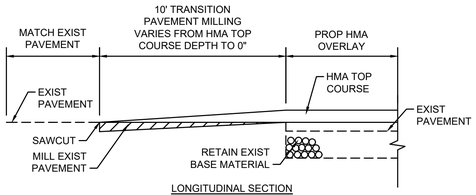

HMA OVERLAY TRANSITION
N.T.S.

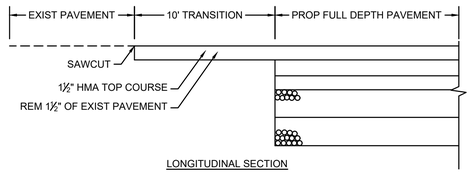

FULL DEPTH PAVEMENT TRANSITION
N.T.S.

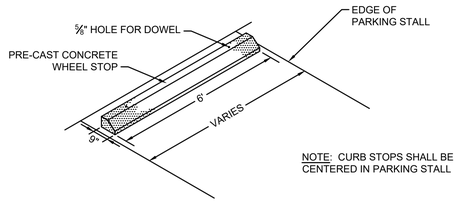

CONCRETE WHEEL STOP
N.T.S.

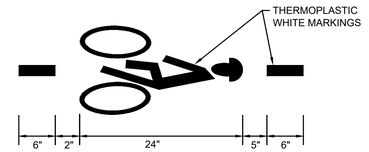

BICYCLE DETECTOR PAVEMENT MARKING
N.T.S.

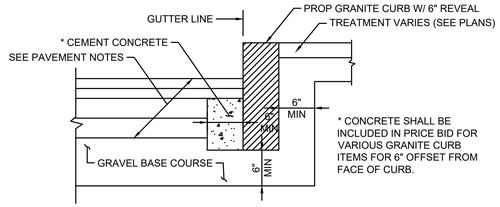

GRANITE CURB IN FULL DEPTH PAVEMENT
N.T.S.

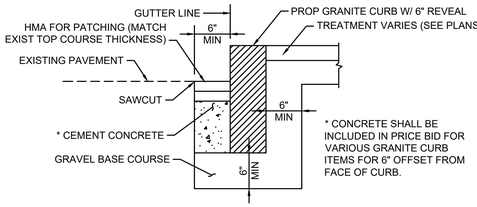

GRANITE CURB IN EXISTING PAVEMENT
N.T.S.

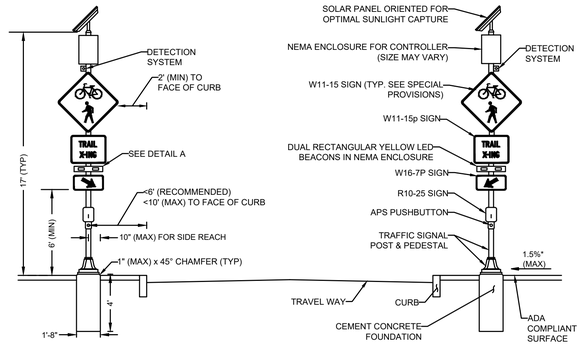

RRFB CLEARANCE TIMING

APPROACH	LENGTH (FT)	CLEARANCE (S)
MERRIMACK STREET	39	18.0
ESSEX STREET	37	17.5
HAVERHILL STREET	26	14.5

RECTANGULAR RAPID FLASHING BEACON (RRFB)
N.T.S.

NOTES:
1. CROSSWALK AND ADA-COMPLIANT RAMPS NOT SHOWN. SEE PLANS FOR LOCATIONS.
2. REFER TO THE SPECIAL PROVISIONS FOR SIGN DIMENSIONS.
3. ACCESS TO ALL PEDESTRIAN ACTUATED CONTROLS SHALL BE ADA/AAB COMPLIANT
4. *0.5% CONSTRUCTION TOLERANCE FOR CROSS-SLOP
5. OMIT DETECTION SYSTEM AT LOCATION 1 (MERRIMACK STREET)

MAJOR ITEMS LIST
2 CEMENT CONCRETE FOUNDATIONS PER 812.30.1
2 17' TRAFFIC SIGNAL POSTS & PEDESTALS
2 APS PUSHBUTTON SYSTEMS
2 DUAL RECTANGULAR YELLOW LED BEACONS IN NEMA ENCLOSURES
2 R10-25 SIGNS
4 W11-15 SIGNS
4 W11-15p SIGNS
2 W16-7pL SIGNS
2 W16-7pR SIGNS
2 SOLAR PANEL SYSTEMS
2 DETECTION SYSTEMS (RADIO, MICROWAVE, OR VIDEO)
2 NEMA ENCLOSURES FOR ALL COMPONENTS NEEDED TO MEET FUNCTIONAL REQUIREMENTS PER SPECIAL PROVISIONS
2 BATTERY SYSTEMS

PLUS ALL MOUNTING AND SUPPORTING HARDWARE AND WIRING NECESSARY TO COMPLETE A WORKING SYSTEM.

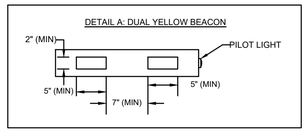

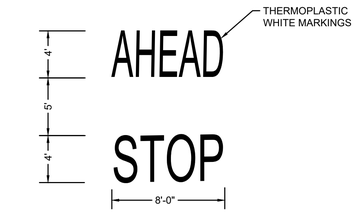

STOP AHEAD PAVEMENT MARKING
N.T.S.

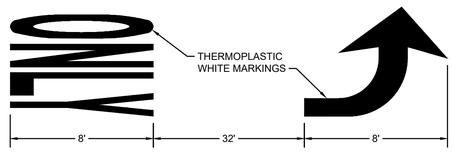

NOTE: SPACING SHALL BE SAME FOR RIGHT TURN LANE AND THRU ONLY PAVEMENT MARKING (REFER TO MASSDOT STANDARD DRAWING TR.6.1)

LEFT TURN LANE PAVEMENT MARKING
N.T.S.

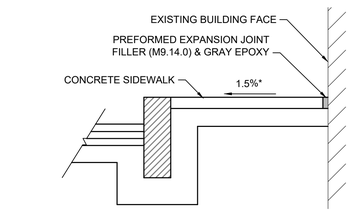

SIDEWALK AT BUILDING FACE
N.T.S.

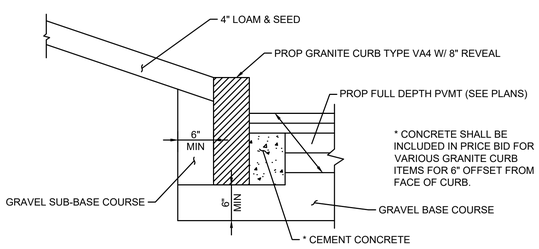

GRANITE BACK CURB
N.T.S.

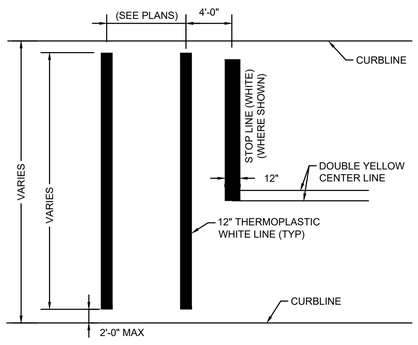

NOTES:
1. ALL 12" LINES SHALL BE APPLIED IN ONE APPLICATION, NO COMBINATION OF LINES (TWO - 6" LINES) WILL BE ACCEPTED.
2. LAYOUT OF CROSSWALKS SHALL BE APPROVED BY THE ENGINEER PRIOR TO APPLICATION.

CROSSWALK PAVEMENT MARKING (SIGNALIZED APPROACH)
N.T.S.

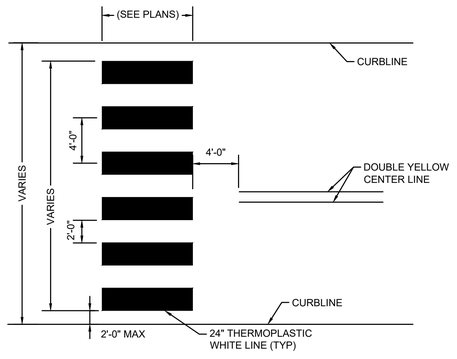

NOTES:
1. ALL 12" LINES SHALL BE APPLIED IN ONE APPLICATION, NO COMBINATION OF LINES (TWO - 6" LINES) WILL BE ACCEPTED. ALL 24" LINES MAY BE EITHER ONE 24" LINE OR A COMBINATION OF TWO - 12" LINES.
2. LAYOUT OF CROSSWALKS SHALL BE APPROVED BY THE ENGINEER PRIOR TO APPLICATION.
3. CROSSWALK BARS SHALL BE PLACED OUTSIDE THE VEHICULAR WHEEL PATH WHEREVER POSSIBLE.

CROSSWALK PAVEMENT MARKING (LADDER); UNSIGNALIZED APPROACH
N.T.S.

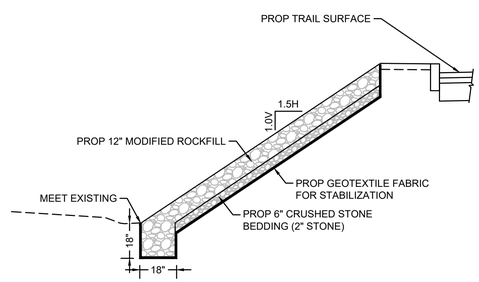

MODIFIED ROCKFILL SLOPE STABILIZATION
N.T.S.

LAWRENCE
LMRC RAIL TRAIL

STATE	FED. AID PROJ. NO.	SHEET NO.	TOTAL SHEETS
MA	CMQ-003S(733)X	128	245
	PROJECT FILE NO.	608930	

CONSTRUCTION DETAILS - 4 OF 5

608930_HD10(CONSTRUCTION DETAILS).DWG Plotted on 6-Sep-2024 8:57 AM

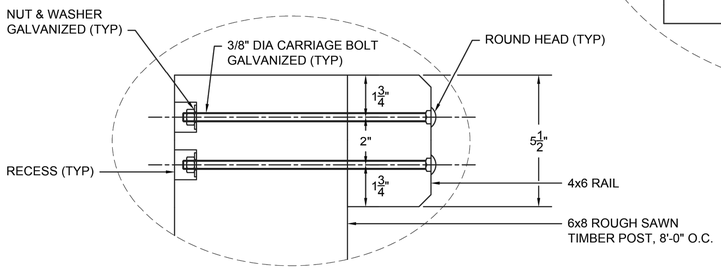

DETAIL A
NOT TO SCALE

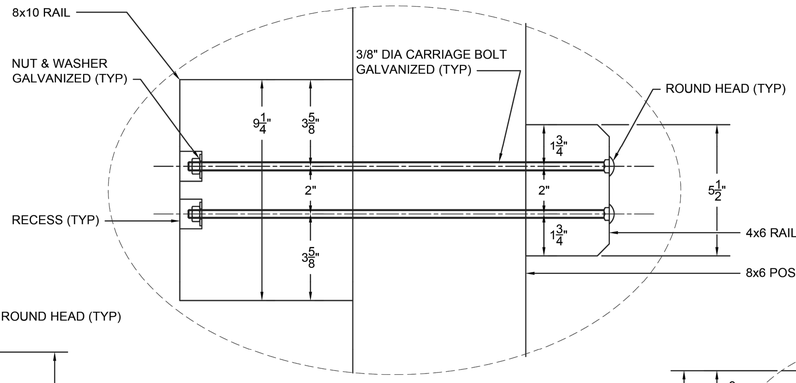

DETAIL B
NOT TO SCALE

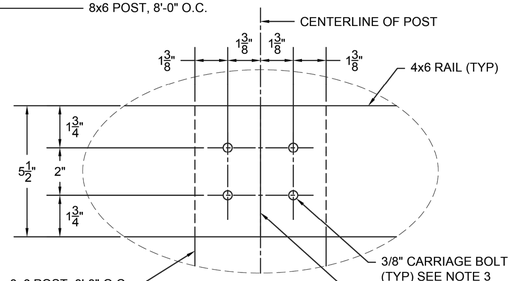

DETAIL C
NOT TO SCALE

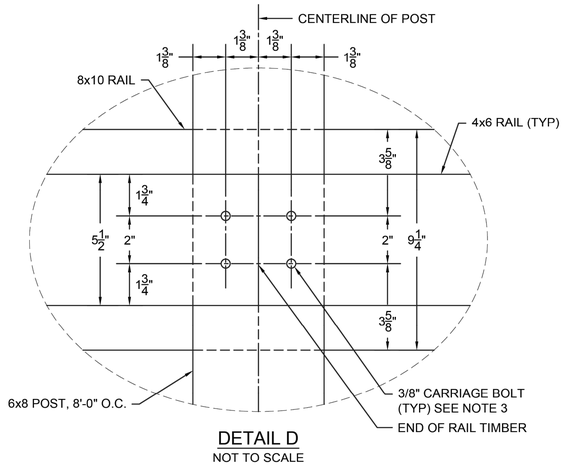

DETAIL D
NOT TO SCALE

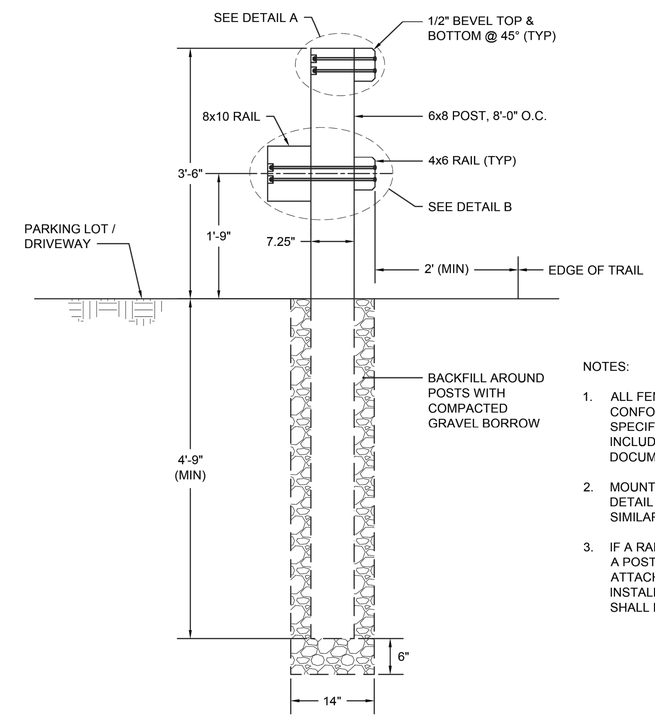

SECTION A-A
NOT TO SCALE

NOTES:

1. ALL FENCING MATERIAL SHALL CONFORM TO THE STANDARD SPECIFICATIONS & SPECIAL PROVISIONS INCLUDED IN THE CONTRACT DOCUMENTS.
2. MOUNTING FOR UPPER RAIL IS SHOWN IN DETAIL A. MOUNT LOWER RAIL IN SIMILAR FASHION.
3. IF A RAIL TIMBER IS CONTINUOUS OVER A POST ONLY 2 BOLTS ARE REQUIRED TO ATTACH RAIL TO POST. BOLTS INSTALLED ON CONTINUOUS RAILS SHALL BE CENTERED ON POST.

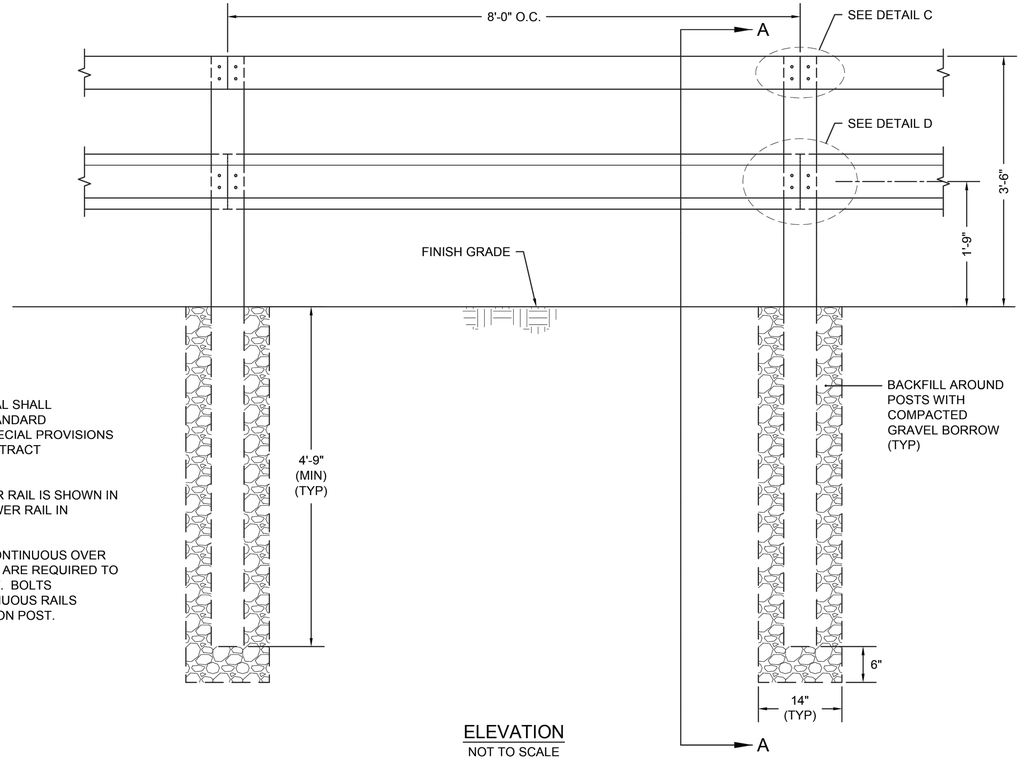

ELEVATION
NOT TO SCALE

WOOD RAIL FENCE WITH GUARDRAIL

N.T.S.

STATE	FED. AID PROJ. NO.	SHEET NO.	TOTAL SHEETS
MA	CMQ-003S(733)X	129	245
PROJECT FILE NO.	608930		

CONSTRUCTION DETAILS - 5 OF 5

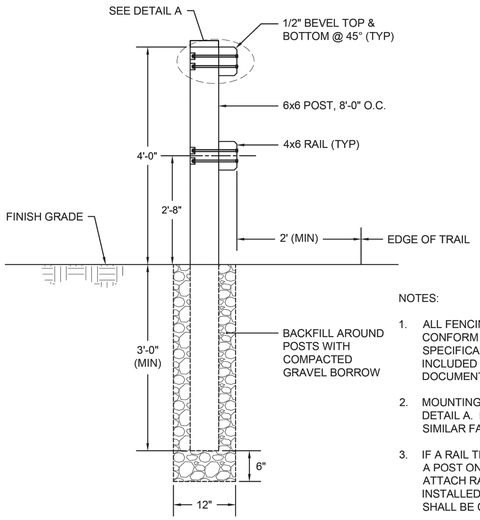

SECTION A-A
NOT TO SCALE

NOTES:

1. ALL FENCING MATERIAL SHALL CONFORM TO THE STANDARD SPECIFICATIONS & SPECIAL PROVISIONS INCLUDED IN THE CONTRACT DOCUMENTS.
2. MOUNTING FOR UPPER RAIL IS SHOWN IN DETAIL A. MOUNT LOWER RAIL IN SIMILAR FASHION.
3. IF A RAIL TIMBER IS CONTINUOUS OVER A POST ONLY 2 BOLTS ARE REQUIRED TO ATTACH RAIL TO POST. BOLTS INSTALLED ON CONTINUOUS RAILS SHALL BE CENTERED ON POST.

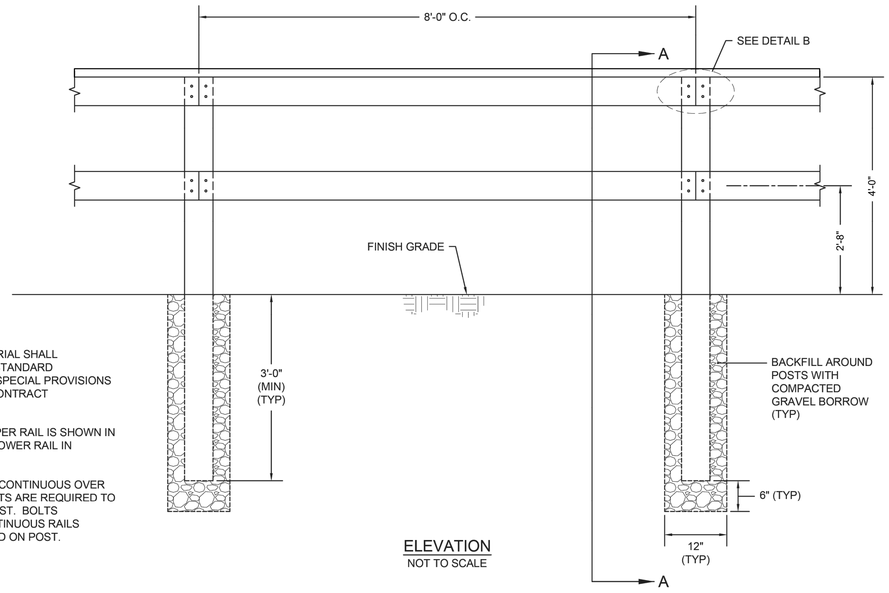

ELEVATION
NOT TO SCALE

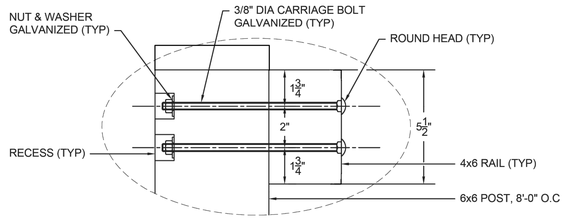

DETAIL A

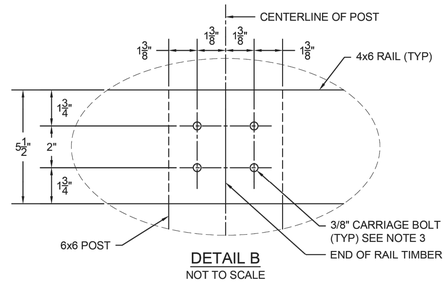

DETAIL B
NOT TO SCALE

WOODEN SAFETY RAIL
N.T.S.

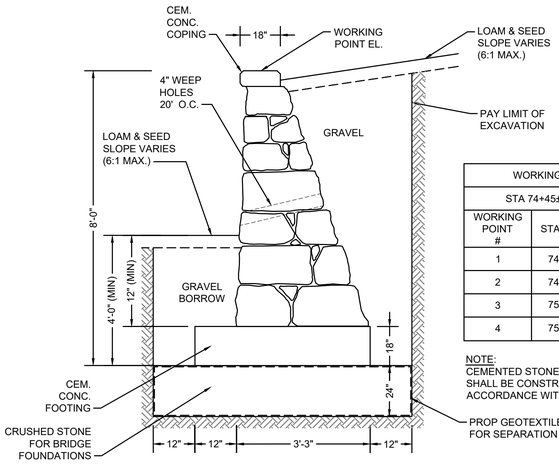

WORKING POINT TABLE		
STA 74+45± TO STA 75+20±		
WORKING POINT #	STATION	ELEVATION
1	74+43	78.30
2	74+50	77.96
3	75+00	76.17
4	75+20	75.45

NOTE:
CEMENTED STONE MASONRY WALL SHALL BE CONSTRUCTED IN ACCORDANCE WITH E 302.2.0.

CEMENTED STONE MASONRY RETAINING WALL
N.T.S.

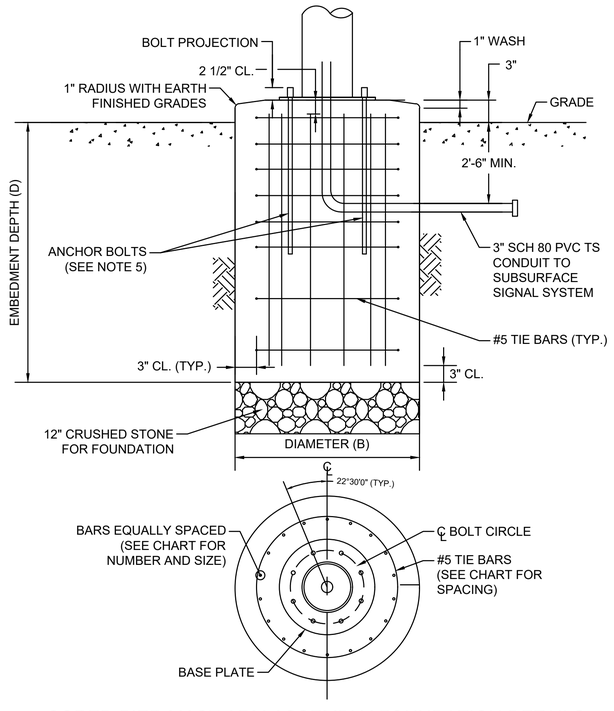

CORED PIER MAST ARM ASSEMBLY FOUNDATION DETAILS
N.T.S.

MAST ARM ASSEMBLY FOUNDATION DATA				
MAST ARM LOCATION	DIA. (B)	DEPTH (D)	VERTICAL BARS	TIE BARS
BASELIINE STA 15+26.2 RT 8.0'	3'-6"	9'-6"	18 - #8	#5 @ 12"
BASELINE STA 15+57.0 LT 77.6'	3'-6"	9'-6"	18 - #8	#5 @ 12"
BASELINE STA 15+73.7 RT 6.2'	3'-6"	11'-6"	18 - #8	#5 @ 12"

FOUNDATION NOTES:

1. ALL COMPONENTS OF THE MAST ARM FOUNDATION SHALL COMPLY WITH THE MASSDOT 2015 STANDARD DRAWINGS FOR OVERHEAD SIGNAL STRUCTURE AND FOUNDATION UNLESS OTHERWISE NOTED. THE DIAMETER, DEPTH AND REBAR SHALL BE AS SHOWN IN THE ACCOMPANYING TABLE.
2. ALL CONCRETE FOR CAST IN PLACE PIER FOUNDATION SHALL BE 4000 PSI, 1½ ", 565 CEMENT CONCRETE.
3. FOUNDATIONS SHALL BE INSTALLED IN ACCORDANCE WITH MASSDOT STANDARD ITEM 945 - DRILLED SHAFTS. THE BASE OF THE DRILLED SHAFT SHALL NOT BE FOUNDED WITH THE ORGANIC LAYER AND AT LEAST 1 DIA. ABOVE THE ORGANIC LAYER.
4. REFER TO BORING LOGS ON PAGE 4.
5. REINFORCEMENT SHALL BE ASTM A615 GRADE 60.
6. ANCHOR BOLTS SHALL BE SET BY TEMPLATE.
7. THE EARTH WALLS OF THE FOUNDATION SHALL BE ADEQUATELY AND SECURELY PROTECTED AT ALL TIMES AGAINST CAVE-INS, DISPLACEMENT OF THE SURROUNDING EARTH AND FOR THE EXCLUSION OF GROUND WATER. THIS MAY BE DONE BY THE USE OF STEEL CYLINDER LINERS OR CASINGS THAT ARE APPROVED BY THE ENGINEER. IF LINERS ARE USED THEY MAY BE RECLAIMED PROVIDED THAT THEY ARE WITHDRAWN AS THE CONCRETE IS BEING PLACED. MAINTAIN A SUFFICIENT HEAD OF CONCRETE WITHIN THE LINER TO PREVENT REDUCTION IN THE FOUNDATION DIAMETER AND TO PREVENT EXTRANEOUS MATERIAL FROM FALLING IN FROM THE SIDES AND MIXING WITH THE CONCRETE.
8. IF THE SOIL IS DISTRIBUTED OR REMOVED BEYOND THE NEAT LINES OF THE OUTSIDE DIMENSION OF THE FOUNDATION, IT SHALL BE REPLACED WITH CONCRETE. ANY ADDITIONAL COST FOR THE CONCRETE SHALL BE PAID FOR BY THE CONTRACTOR.
9. SPECIAL CARE SHOULD BE GIVEN TO AREAS WHERE WET SOIL IS ENCOUNTERED, TO INSURE THAT THE PREAUGERED HOLE DOES NOT COLLAPSE. THIS MAY REQUIRE THE USE OF STEEL CYLINDER LINERS OR CASINGS TO HOLD THE SOIL IN PLACE UNTIL READY FOR CONCRETE PLACEMENT, UPON APPROVAL FROM THE ENGINEER. THE STEEL CYLINDERS OR CASINGS SHALL BE WITHDRAWN AS THE FOUNDATION CONCRETE IS PLACED.

608930_HD10(CONSTRUCTION DETAILS).DWG Plotted on 6-Sep-2024 8:58 AM

LAWRENCE
LMRC RAIL TRAIL

STATE	FED. AID PROJ. NO.	SHEET NO.	TOTAL SHEETS
MA	CMQ-003S(733)X	130	245
	PROJECT FILE NO. 608930		

CURB RAMP & DRIVEWAY DETAILS - 1 OF 2

608930_HD10(CONSTRUCTION DETAILS).DWG Plotted on 6-Sep-2024 8:59 AM

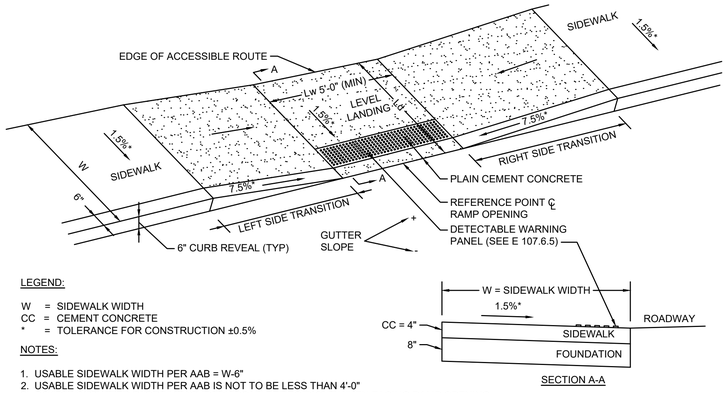

LEGEND:

W = SIDEWALK WIDTH
CC = CEMENT CONCRETE
* = TOLERANCE FOR CONSTRUCTION ±0.5%

NOTES:

1. USABLE SIDEWALK WIDTH PER AAB = W-6"
2. USABLE SIDEWALK WIDTH PER AAB IS NOT TO BE LESS THAN 4'-0"
3. ROADWAY GUTTER SLOPE MEASURED FROM LEFT TO RIGHT WHEN FACING RAMP OPENING
4. SEE E 107.6.5 FOR DETECTABLE WARNING PANEL DETAILS
5. SEE E 107.2.1 FOR ALL OTHER DETAILS

CURB RAMP TYPE A

N.T.S.

PEDESTRIAN CURB RAMP DATA												
RAMP #	BASELINE REFERENCE	STATION	OFFSET	LEVEL LANDING		ROADWAY GUTTER SLOPE	LEFT SIDE			RIGHT SIDE		
				WIDTH (Lw)	DEPTH (Ld)		TRANSITION LENGTH	CURB REVEAL	SIDEWALK WIDTH (W)	TRANSITION LENGTH	CURB REVEAL	SIDEWALK WIDTH (W)
1	LAWRENCE RAIL TRAIL A	0+80.7	4.5' LT	5'-0"	7'-0"	-0.38%	3'-3"	0'-3"	7'-0"	7'-8"	0'-6"	7'-0"

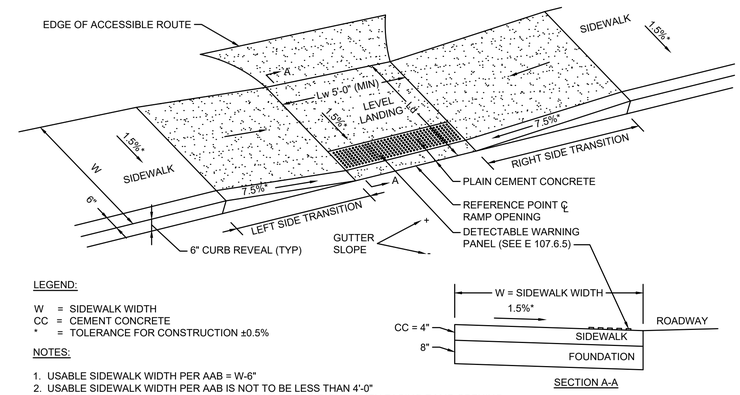

LEGEND:

W = SIDEWALK WIDTH
CC = CEMENT CONCRETE
* = TOLERANCE FOR CONSTRUCTION ±0.5%

NOTES:

1. USABLE SIDEWALK WIDTH PER AAB = W-6"
2. USABLE SIDEWALK WIDTH PER AAB IS NOT TO BE LESS THAN 4'-0"
3. ROADWAY GUTTER SLOPE MEASURED FROM LEFT TO RIGHT WHEN FACING RAMP OPENING
4. SEE E 107.6.5 FOR DETECTABLE WARNING PANEL DETAILS
5. SEE E 107.2.1 FOR ALL OTHER DETAILS

CURB RAMP TYPE B

N.T.S.

PEDESTRIAN CURB RAMP DATA												
RAMP #	BASELINE REFERENCE	STATION	OFFSET	LEVEL LANDING		ROADWAY GUTTER SLOPE	LEFT SIDE			RIGHT SIDE		
				WIDTH (Lw)	DEPTH (Ld)		TRANSITION LENGTH	CURB REVEAL	SIDEWALK WIDTH (W)	TRANSITION LENGTH	CURB REVEAL	SIDEWALK WIDTH (W)
2	LAWRENCE RAIL TRAIL A	1+20.1	0.5' RT	10'-0"	8'-6"	-0.51%	7'-8"	0'-6"	8'-6"	6'-6"	0'-6"	8'-6"

CURB RAMP NOTES:

1. A MINIMUM OF 3'-0" CLEAR (EXCLUDING CURB WIDTH) SHALL BE MAINTAINED AT ANY PERMANENT OBSTACLE IN ACCESSIBLE ROUTE (I.E., HYDRANTS, UTILITY POLES, TREE WELLS, SIGNS, ETC.).
2. CURB TREATMENT VARIES, SEE PLANS FOR CURB TYPE.
3. RAMP, CURB AND ADJACENT PAVEMENTS SHALL BE GRADED TO PREVENT PONDING.
4. ELIMINATE CURBING AT RAMP WHERE IT ABUTS ROADWAY.
5. DETECTABLE WARNING PANELS ARE REQUIRED ON ALL OF THE PROPOSED WHEELCHAIR RAMPS AND ARE TO BE INSTALLED IN ACCORDANCE WITH CONSTRUCTION STANDARD E 107.6.5 (OCTOBER 2017). CONTRACTOR SHALL PROVIDE 6" BETWEEN DETECTABLE WARNING PANEL AND EDGE OF CONCRETE WHERE IT ABUTS LOAM & SEED.`
6. WHEELCHAIR RAMP SLOPES AND CROSS SLOPES SHALL HAVE A CONSTRUCTION TOLERANCE OF ±0.5%.
7. DETECTABLE WARNING PANELS SHALL BE BRICK RED IN COLOR.
8. IT IS THE RESPONSIBILITY OF THE CONTRACTOR TO VERIFY EXISTING GUTTER SLOPES AND ENSURE CURB AND SIDEWALK TRANSITIONS ARE CONSTRUCTED TO MEET ADA REQUIREMENTS.

CURB RAMP NOTES

N.T.S.

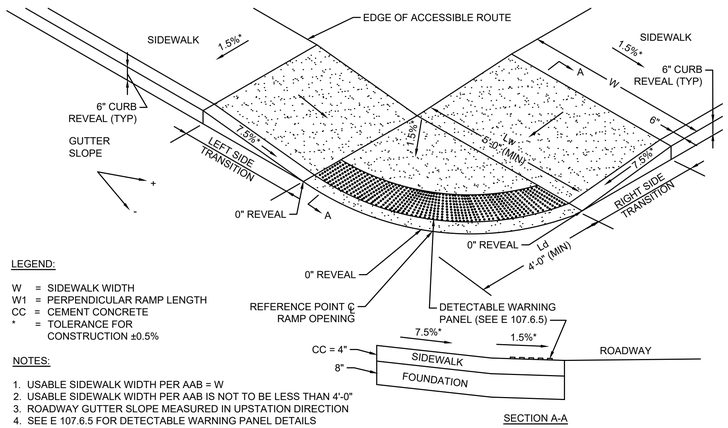

LEGEND:

W = SIDEWALK WIDTH
W1 = PERPENDICULAR RAMP LENGTH
CC = CEMENT CONCRETE
* = TOLERANCE FOR CONSTRUCTION ±0.5%

NOTES:

1. USABLE SIDEWALK WIDTH PER AAB = W
2. USABLE SIDEWALK WIDTH PER AAB IS NOT TO BE LESS THAN 4'-0"
3. ROADWAY GUTTER SLOPE MEASURED IN UPSTATION DIRECTION
4. SEE E 107.6.5 FOR DETECTABLE WARNING PANEL DETAILS

CURB RAMP TYPE C

N.T.S.

PEDESTRIAN CURB RAMP DATA												
RAMP #	BASELINE REFERENCE	STATION	OFFSET	LEVEL LANDING		ROADWAY GUTTER SLOPE	LEFT SIDE			RIGHT SIDE		
				WIDTH (Lw)	DEPTH (Ld)		TRANSITION LENGTH	CURB REVEAL	SIDEWALK WIDTH (W)	TRANSITION LENGTH	CURB REVEAL	SIDEWALK WIDTH (W)
3	LAWRENCE RAIL TRAIL B	24+94.4	32.4' LT	10'-0"	9'-5"	-0.85%	9'-0"	0'-6"	9'-10"	9'-5"	0'-6"	8'-6"

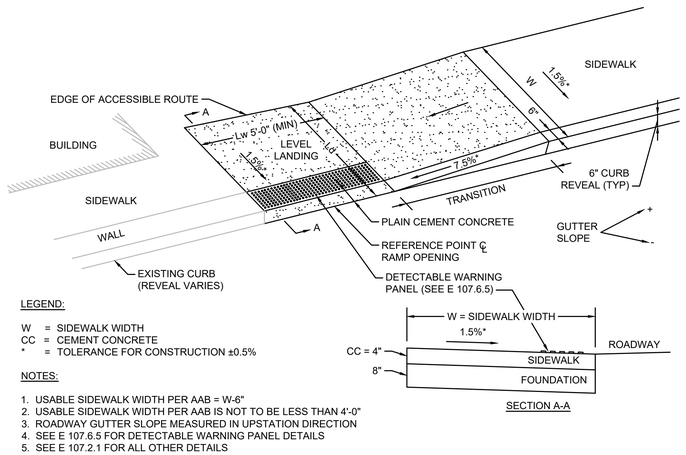

LEGEND:

W = SIDEWALK WIDTH
CC = CEMENT CONCRETE
* = TOLERANCE FOR CONSTRUCTION ±0.5%

NOTES:

1. USABLE SIDEWALK WIDTH PER AAB = W-6"
2. USABLE SIDEWALK WIDTH PER AAB IS NOT TO BE LESS THAN 4'-0"
3. ROADWAY GUTTER SLOPE MEASURED IN UPSTATION DIRECTION
4. SEE E 107.6.5 FOR DETECTABLE WARNING PANEL DETAILS
5. SEE E 107.2.1 FOR ALL OTHER DETAILS

CURB RAMP TYPE D

N.T.S.

PEDESTRIAN CURB RAMP DATA									
RAMP #	BASELINE REFERENCE	STATION	OFFSET	LEVEL LANDING		ROADWAY GUTTER SLOPE	RIGHT SIDE		
				WIDTH (Lw)	DEPTH (Ld)		TRANSITION LENGTH	CURB REVEAL	SIDEWALK WIDTH (W)
4	LAWRENCE RAIL TRAIL A	15+34.1	22.6' RT	10'-0"	9'-0"	1.54%	9'-0"	0'-6"	9'-3"

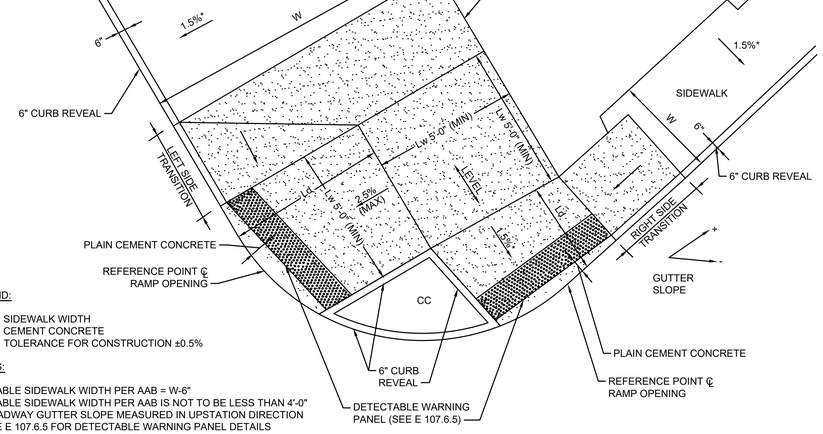

LEGEND:

W = SIDEWALK WIDTH
CC = CEMENT CONCRETE
* = TOLERANCE FOR CONSTRUCTION ±0.5%

NOTES:

1. USABLE SIDEWALK WIDTH PER AAB = W-6"
2. USABLE SIDEWALK WIDTH PER AAB IS NOT TO BE LESS THAN 4'-0"
3. ROADWAY GUTTER SLOPE MEASURED IN UPSTATION DIRECTION
4. SEE E 107.6.5 FOR DETECTABLE WARNING PANEL DETAILS
5. SEE E 107.2.1 FOR ALL OTHER DETAILS

CURB RAMP TYPE E

N.T.S.

PEDESTRIAN CURB RAMP DATA												
RAMP #	BASELINE REFERENCE	STATION	OFFSET	LEVEL LANDING		ROADWAY GUTTER SLOPE	LEFT SIDE			RIGHT SIDE		
				WIDTH (Lw)	DEPTH (Ld)		TRANSITION LENGTH	CURB REVEAL	SIDEWALK WIDTH (W)	TRANSITION LENGTH	CURB REVEAL	SIDEWALK WIDTH (W)
5	LAWRENCE RAIL TRAIL A	15+68.8	14.2' RT	10'-0"	17'-6"	-0.05%	-	-	-	6'-6"	0'-6"	6'-0"
6	LAWRENCE RAIL TRAIL A	15+80.7	2.8' LT	10'-0"	9'-3"	0.75%	6'-6"	0'-6"	21'-4"	-	-	-

LAWRENCE
LMRC RAIL TRAIL

STATE	FED. AID PROJ. NO.	SHEET NO.	TOTAL SHEETS
MA	CMQ-003S(733)X	131	245
PROJECT FILE NO.	608930		

CURB RAMP & DRIVEWAY DETAILS - 2 OF 2

608930_HD10(CONSTRUCTION DETAILS).DWG Plotted on 6-Sep-2024 7:31 PM

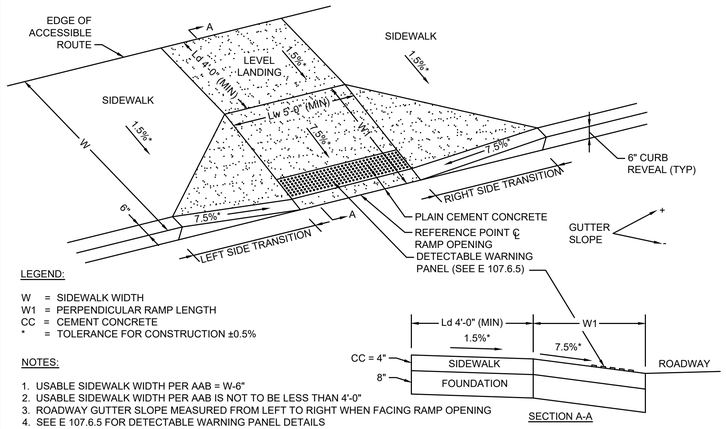

LEGEND:

W = SIDEWALK WIDTH
W1 = PERPENDICULAR RAMP LENGTH
CC = CEMENT CONCRETE
* = TOLERANCE FOR CONSTRUCTION ±0.5%

NOTES:

1. USABLE SIDEWALK WIDTH PER AAB = W-6"
2. USABLE SIDEWALK WIDTH PER AAB IS NOT TO BE LESS THAN 4'-0"
3. ROADWAY GUTTER SLOPE MEASURED FROM LEFT TO RIGHT WHEN FACING RAMP OPENING
4. SEE E 107.6.5 FOR DETECTABLE WARNING PANEL DETAILS

CURB RAMP TYPE F

N.T.S.

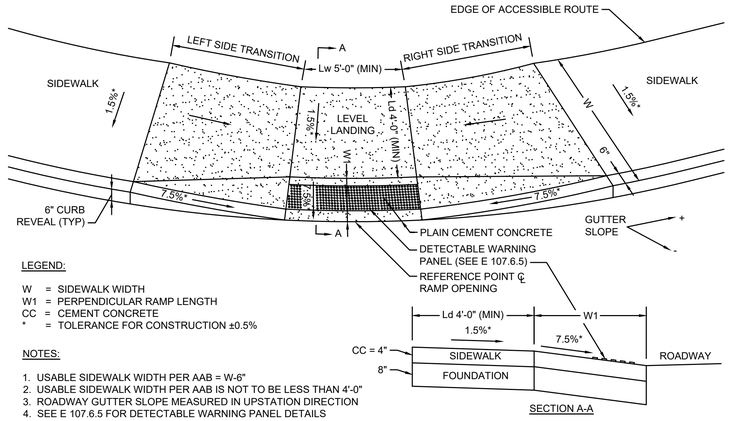

LEGEND:

W = SIDEWALK WIDTH
W1 = PERPENDICULAR RAMP LENGTH
CC = CEMENT CONCRETE
* = TOLERANCE FOR CONSTRUCTION ±0.5%

NOTES:

1. USABLE SIDEWALK WIDTH PER AAB = W-6"
2. USABLE SIDEWALK WIDTH PER AAB IS NOT TO BE LESS THAN 4'-0"
3. ROADWAY GUTTER SLOPE MEASURED IN UPSTATION DIRECTION
4. SEE E 107.6.5 FOR DETECTABLE WARNING PANEL DETAILS

CURB RAMP TYPE G

N.T.S.

PEDESTRIAN CURB RAMP DATA													
RAMP #	BASELINE REFERENCE	STATION	OFFSET	LEVEL LANDING		RAMP (W1)	ROADWAY GUTTER SLOPE	LEFT SIDE			RIGHT SIDE		
				WIDTH (Lw)	DEPTH (Ld)			TRANSITION LENGTH	CURB REVEAL	SIDEWALK WIDTH (W)	TRANSITION LENGTH	CURB REVEAL	SIDEWALK WIDTH (W)
7	LAWRENCE RAIL TRAIL B	25+22.0	0.0' LT/RT	12'-0"	5'-0"	9'-8"	-2.11%	11'-0"	0'-6"	6'-6"	6'-6"	0'-6"	8'-6"

PEDESTRIAN CURB RAMP DATA													
RAMP #	BASELINE REFERENCE	STATION	OFFSET	LEVEL LANDING		RAMP (W1)	ROADWAY GUTTER SLOPE	LEFT SIDE			RIGHT SIDE		
				WIDTH (Lw)	DEPTH (Ld)			TRANSITION LENGTH	CURB REVEAL	SIDEWALK WIDTH (W)	TRANSITION LENGTH	CURB REVEAL	SIDEWALK WIDTH (W)
8	ESSEX STREET	91+36.5	16.0' RT	12'-0"	5'-0"	7'-0"	0.52%	6'-6"	0'-6"	12'-0"	7'-8"	0'-6"	12'-0"
9	ESSEX STREET	91+36.5	20.9' LT	12'-0"	10'-0"	5'-6"	-0.58%	7'-8"	0'-6"	11'-6"	6'-6"	0'-6"	9'-9"
10	HAVERHILL STREET	101+09.0	13.0' RT	12'-0"	10'-0"	6'-0"	0.58%	6'-6"	0'-6"	11'-0"	7'-8"	0'-6"	11'-0"
11	HAVERHILL STREET	101+09.4	13.0' LT	12'-0"	5'-0"	7'-6"	-0.45%	7'-8"	0'-6"	12'-6"	6'-6"	0'-6"	12'-6"
12	RAILROAD STREET	601+13.6	16.7' RT	9'-10"	4'-0"	3'-6"	-0.85%	7'-8"	0'-6"	7'-6"	3'-3"	0'-3"	7'-6"

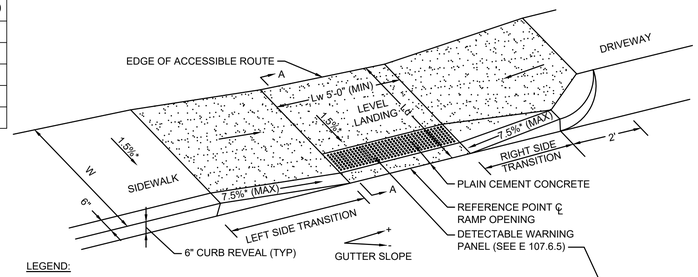

LEGEND:

W = SIDEWALK WIDTH
CC = CEMENT CONCRETE
* = TOLERANCE FOR CONSTRUCTION ±0.5%
** = CONTRACTOR TO DETERMINE GUTTER SLOPE IN FIELD AND REFER TO MASSDOT CONSTRUCTION DETAIL E107.9.0

NOTES:

1. USABLE SIDEWALK WIDTH PER AAB = W-6"
2. USABLE SIDEWALK WIDTH PER AAB IS NOT TO BE LESS THAN 4'-0"
3. ROADWAY GUTTER SLOPE MEASURED FROM LEFT TO RIGHT WHEN FACING RAMP OPENING
4. SEE E 107.6.5 FOR DETECTABLE WARNING PANEL DETAILS
5. SEE E 107.2.1 FOR ALL OTHER DETAILS

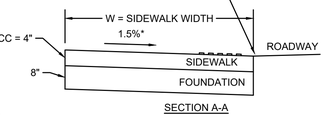

CURB RAMP TYPE H

N.T.S.

PEDESTRIAN CURB RAMP DATA													
RAMP #	BASELINE REFERENCE	STATION	OFFSET	LEVEL LANDING		ROADWAY GUTTER SLOPE	LEFT SIDE			RIGHT SIDE			
				WIDTH (Lw)	DEPTH (Ld)		TRANSITION LENGTH	CURB REVEAL	SIDEWALK WIDTH (W)	TRANSITION LENGTH	CURB REVEAL	SIDEWALK WIDTH (W)	
13	RAILROAD STREET	601+13.0	16.7' LT	5'-0"	5'-6"	0.48%	5'-0"	0'-4"	8'-0"	3'-10"	0'-3"	--	

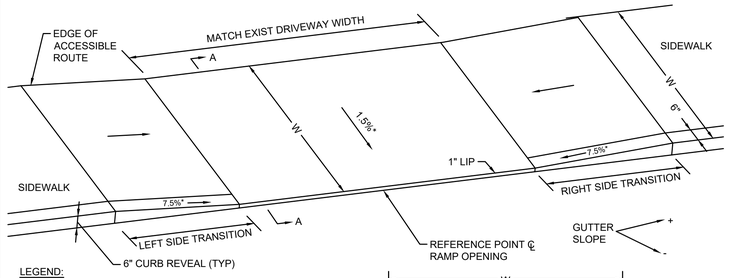

LEGEND:

W = SIDEWALK WIDTH
Wc = CURB WIDTH
CC = CEMENT CONCRETE
HMA = HOT MIX ASPHALT
* = TOLERANCE FOR CONSTRUCTION ±0.5%

NOTES:

1. USABLE SIDEWALK WIDTH PER AAB = W-6"
2. USABLE SIDEWALK WIDTH PER AAB IS NOT TO BE LESS THAN 4'-0"
3. ROADWAY GUTTER SLOPE MEASURED FROM LEFT TO RIGHT WHEN FACING RAMP OPENING
4. SURFACE TREATMENT VARIES; SEE PLANS

SIDEWALK THROUGH DRIVEWAY TYPE A

N.T.S.

DRIVEWAY DATA													
DWY #	BASELINE REFERENCE	STATION	OFFSET	DRIVEWAY SURFACE	DWY WIDTH @ GUTTER	ROADWAY GUTTER SLOPE	WIDTH OF ACCESSIBLE ROUTE	LEFT SIDE TRANSITION			RIGHT SIDE TRANSITION		
								LENGTH	CURB REVEAL	SW WIDTH (W)	LENGTH	CURB REVEAL	SW WIDTH (W)
1	LAWRENCE RAIL TRAIL A	0+81.9	17.0' RT	CEM CONC	16'-0"	0.26%	7'-0"	3'-3"	0'-3"	7'-0"	3'-10"	0'-3"	7'-0"
2	LAWRENCE RAIL TRAIL A	13+57.7	6.5' RT	CEM CONC	54'-10"	-0.43%	10'-0"	7'-8"	0'-6"	10'-0"	6'-6"	0'-6"	12'-1"
3	LAWRENCE RAIL TRAIL B	32+73.3	35.2' RT	CEM CONC	12'-0"	2.15%	12'-0"	6'-6"	0'-6"	12'-0"	11'-0"	0'-6"	12'-0"
4	LAWRENCE RAIL TRAIL B	32+68.5	41.1' LT	CEM CONC	30'-0"	-0.37%	7'-3"	7'-8"	0'-6"	10'-5"	6'-6"	0'-6"	7'-5"
5	LAWRENCE RAIL TRAIL B	33+13.4	47.3' RT	CEM CONC	30'-1"	-2.21%	6'-5"	11'-0"	0'-6"	9'-2"	6'-6"	0'-6"	6'-0"
7	RAILROAD STREET	601+29.0	16.9' LT	CEM CONC	18'-0"	0.25%	8'-0"	--	--	--	7'-8"	0'-6"	8'-6"

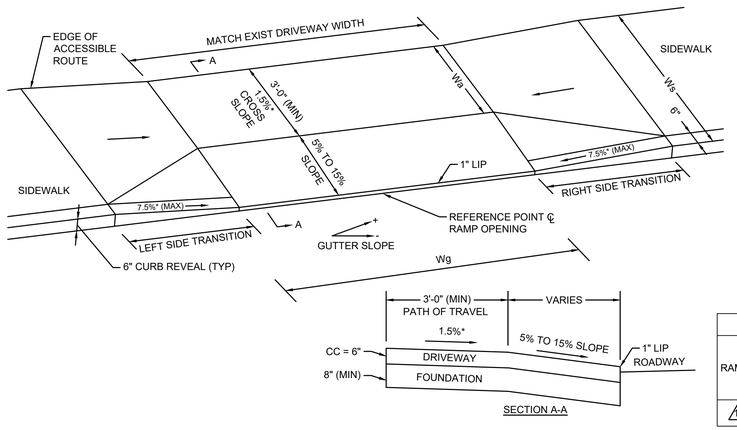

SIDEWALK THROUGH DRIVEWAY TYPE B

N.T.S.

DRIVEWAY DATA													
DWY #	BASELINE REFERENCE	STATION	OFFSET	DRIVEWAY SURFACE	DWY WIDTH @ GUTTER (Wg)	ROADWAY GUTTER SLOPE	WIDTH OF ACCESSIBLE ROUTE (Wa)	LEFT SIDE TRANSITION			RIGHT SIDE TRANSITION		
								LENGTH	CURB REVEAL	SW WIDTH (Ws)	LENGTH	CURB REVEAL	SW WIDTH (Ws)
6	LAWRENCE RAIL TRAIL B	49+61.9	58.3' RT	CEM CONC	30'-0"	-0.51%	7'-6"	7'-8"	0'-6"	7'-6"	6'-6"	0'-6"	7'-6"
8	LOWELL STREET	11+21.4	16.3' LT	CEM CONC	15'-0"	-2.83%	5'-0"	5'-6"	0'-3"	7'-9"	3'-3"	0'-3"	7'-10"

LAWRENCE
LMRC RAIL TRAIL OVER MANCHESTER STREET

STATE	FED. AID PROJ. NO.	SHEET NO.	TOTAL SHEETS
MA	CMQ-003S(733)X	132	245
	PROJECT FILE NO. 608930		

KEY PLAN, PROFILES, LOCUS AND INDEX

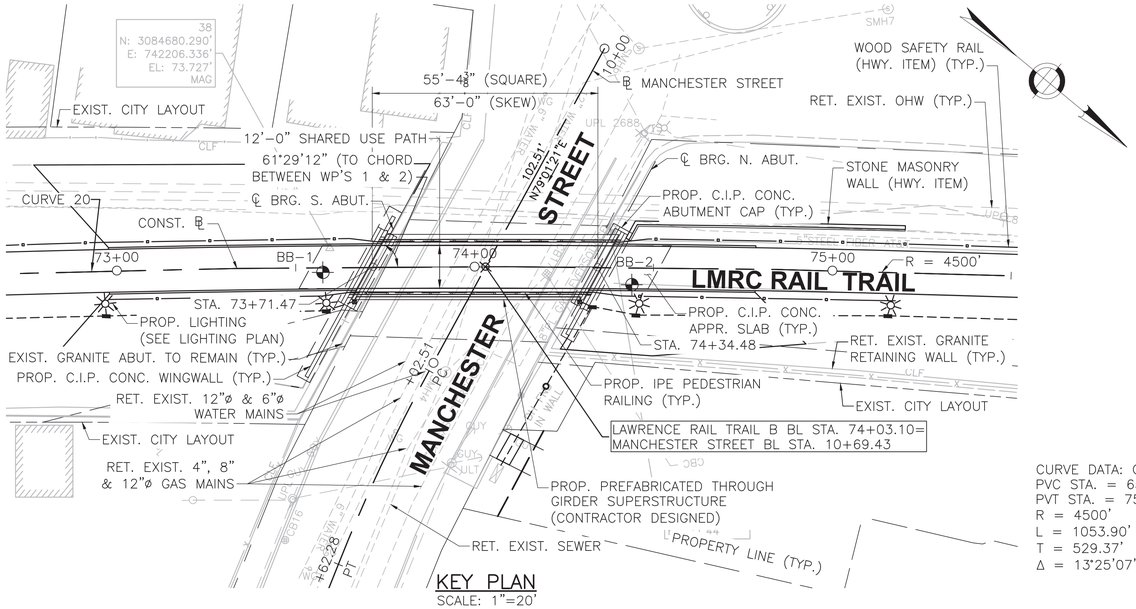

KEY PLAN
SCALE: 1"=20'

CURVE DATA: CURVE 20
PVC STA. = 65+05.38
PVT STA. = 75+59.38
R = 4500'
L = 1053.90'
T = 529.37'
Δ = 13°25'07"

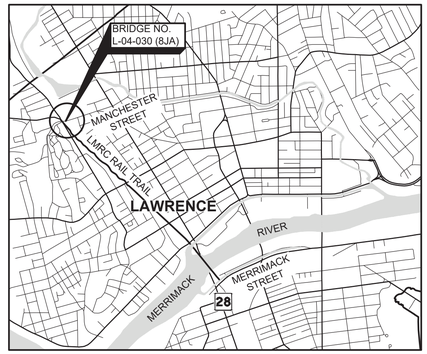

LOCUS MAP
SCALE: 1"=2000'

INDEX OF SHEETS

SHEET NO.	DESCRIPTION
1	KEY PLAN, PROFILES, LOCUS AND INDEX
2	GENERAL NOTES
3	BORING LOGS
4	DEMOLITION DETAILS
5	PLAN AND ELEVATION
6	ABUTMENT PLAN AND ELEVATION
7	CROSS SECTION & MISCELLANEOUS DETAILS

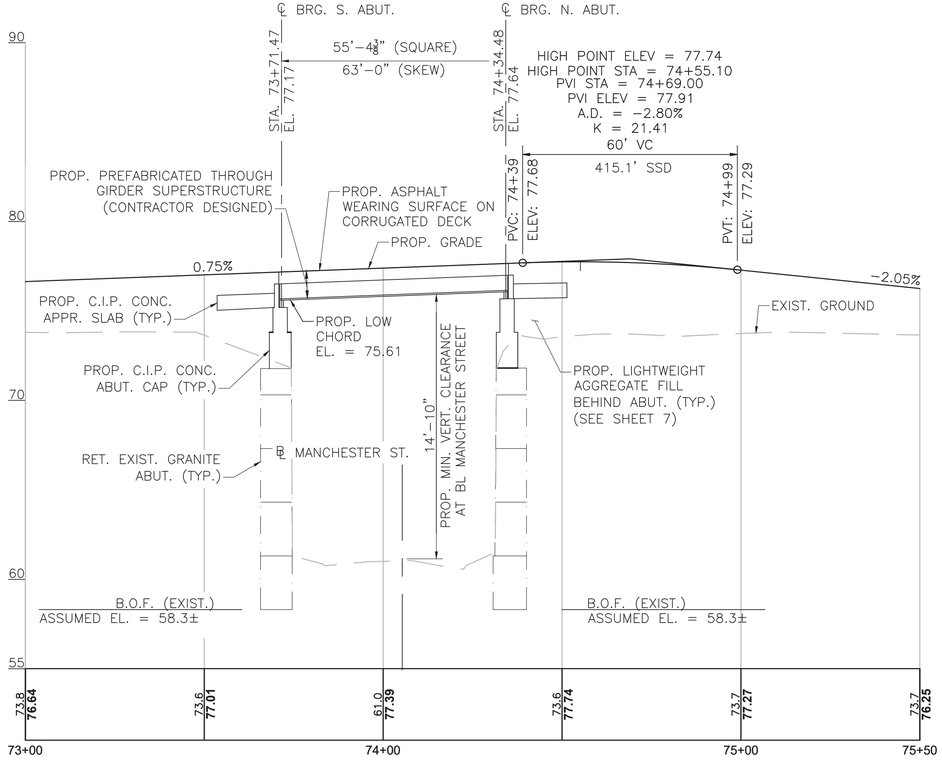

LMRC RAIL TRAIL PROFILE
HORIZONTAL SCALE: 1" = 20'-0"
VERTICAL SCALE" 1" = 4'-0"

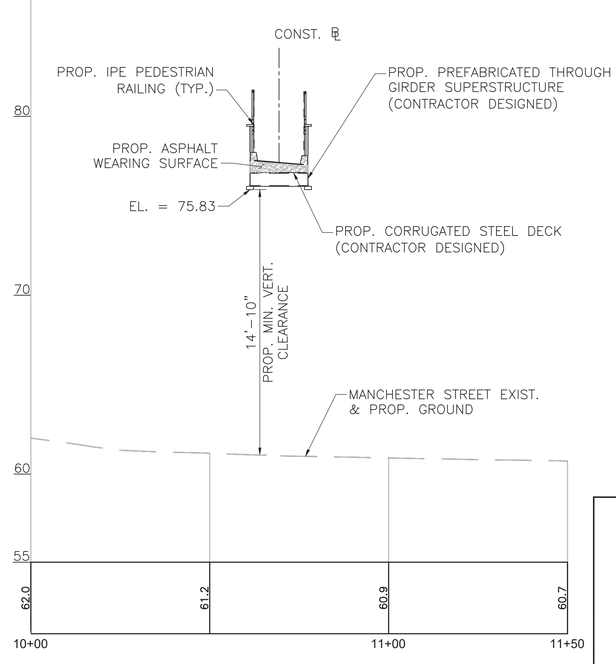

MANCHESTER STREET PROFILE
HORIZONTAL SCALE: 1" = 20'-0"
VERTICAL SCALE" 1" = 4'-0"

NOTE:
EXISTING SUPERSTRUCTURE PREVIOUSLY REMOVED.

COMMONWEALTH OF MASSACHUSETTS
JODY P. TRUNFIO
STRUCTURAL
No. 46075
PROFESSIONAL ENGINEER

Jody P. Trunfio Digitally signed by Jody P. Trunfio Date: 2024.09.16 16:40:06 -04'00'

TEC
The Engineering Corp
282 Merrimack Street, Second Floor
Lawrence, MA 01843
978-794-1792

SEP. 7, 2024 | ISSUED FOR CONSTRUCTION

MassDOT Massachusetts Department of Transportation Highway Division

SUPERSTRUCTURE REPLACEMENT
LAWRENCE
LMRC RAIL TRAIL
OVER MANCHESTER STREET

MASSACHUSETTS DEPARTMENT OF TRANSPORTATION
HIGHWAY DIVISION
10 PARK PLAZA BOSTON, MASS

Alexander K. Bardow, P.E. Digitally signed by Alexander K. Bardow, P.E. Date: 2024.09.20 09:32:54 -04'00'
STATE BRIDGE ENGINEER

Carrie Lavallee Digitally signed by Carrie Lavallee, P.E. Date: 2024.09.23 17:00:06 -04'00'
CHIEF ENGINEER

SHEET 1 OF 7 SHEETS BRIDGE NO. L-04-030 (8JA)

608930_BR1(L04030).DWG Plotted on 5-Sep-2024 9:46 PM

07-September-2024 Fourth Structural Submittal (S4)

LAWRENCE
LMRC RAIL TRAIL OVER MANCHESTER STREET

STATE	FED. AID PROJ. NO.	SHEET NO.	TOTAL SHEETS
MA	CMQ-003S(733)X	133	245
	PROJECT FILE NO. 608930		

GENERAL NOTES

DESIGN:

IN ACCORDANCE WITH THE 2020 AMERICAN ASSOCIATION OF STATE HIGHWAY AND TRANSPORTATION OFFICIALS (AASHTO) LRFD BRIDGE DESIGN SPECIFICATIONS, 9TH EDITION WITH CURRENT INTERIM SPECIFICATIONS THROUGH 2021, AND THE 2009 AASHTO LRFD GUIDE SPECIFICATIONS FOR THE DESIGN OF PEDESTRIAN BRIDGES WITH INTERIM SPECIFICATIONS THROUGH 2015 FOR PEDESTRIAN LOADING OF 90 PSF AND H10 LOADING.

BENCHMARKS:

RIVET IN WALL
EL: 71.44'
N: 3084737.4728
E: 742152.4000

ELEVATIONS ARE BASED ON THE NORTH AMERICAN VERTICAL DATUM (NAVD) OF 1988.

SURVEY

THE CONTRACTOR SHALL CONDUCT HIS/HER OWN SURVEY TO REESTABLISH THE CENTERLINE OF CONSTRUCTION PRIOR TO ANY CONSTRUCTION ACTIVITIES. THE CONTRACTOR SHALL VERIFY ALL DIMENSIONS REQUIRED FOR THE PROPER PERFORMANCE OF HIS/HER WORK. FIELD CONDITIONS MAY EXIST THAT DEVIATE FROM THE TYPICAL AND THEORETICAL DIMENSIONS SHOWN ON THE PLANS. THE CONTRACTOR SHALL BE SOLELY RESPONSIBLE FOR THE FABRICATION AND FIT OF HIS/HER WORK.

SCALES:

SCALES NOTED ON THE PLANS ARE NOT APPLICABLE TO REDUCED SIZE PRINTS. DIVIDE SCALES BY 2 FOR HALF-SIZE PRINTS (A3).

FOUNDATIONS:

1. FOUNDATIONS MAY BE ALTERED, IF NECESSARY, TO SUIT CONDITIONS ENCOUNTERED DURING CONSTRUCTION, WITH APPROVAL OF THE ENGINEER.
2. REFER TO THE GEOTECHNICAL ENGINEERING REPORT DATED FEBRUARY 2019 WITH DECEMBER 2022 REVISIONS BY TRC INC.
3. SEE ADDITIONAL FOUNDATION NOTES ON SHEET 6.

UNSUITABLE MATERIAL:

ALL UNSUITABLE MATERIAL SHALL BE REMOVED WITHIN THE LIMITS OF THE FOUNDATIONS OF THE STRUCTURE, AS DIRECTED BY THE ENGINEER.

ANCHOR BOLTS:

ALL ANCHOR BOLTS SHALL BE SET BY TEMPLATE BEFORE THE CONCRETE IS PLACED. ANCHOR BOLTS SHALL CONFORM TO THE REQUIREMENTS OF ASTM F1554 GRADE 36 UNLESS OTHERWISE NOTED ON THE PLANS.

CONCRETE:

1. ALL EXPOSED EDGE CORNERS SHALL BE FINISHED WITH A $\frac{3}{4}$" CHAMFER UNLESS OTHERWISE NOTED OR DIRECTED.
2. THE CONTRACTOR SHALL BE RESPONSIBLE FOR PREVENTING CONCRETE STAINS AND DISCOLORATION DURING CONSTRUCTION UNTIL SUCH TIME AS THE SURFACES ARE APPROVED AND ACCEPTED. ANY CONCRETE STAINS AND DISCOLORATION OCCURRING PRIOR TO ACCEPTANCE OF SURFACES SHALL BE REMOVED BY THE CONTRACTOR AT ITS OWN EXPENSE USING AN APPROVED PROCEDURE.
3. ALL CONCRETE SHALL BE 5000 PSI, 3/4 INCH, 585 HP CEMENT CONCRETE.

STRUCTURAL STEEL:

ALL STRUCTURAL STEEL BE AASHTO M270 (A992) GRADE 50. ALL STRUCTURAL STEEL SHALL BE HOT DIP GALVANIZED AND PAINTED. PAINT COLOR SHALL BE COORDINATED WITH THE ENGINEER AND THE CITY OF LAWRENCE. THE CONTRACTOR SHALL USE FED. STANDARD 595 COLORS.

REINFORCEMENT:

REINFORCING STEEL SHALL BE EPOXY COATED AND CONFORM TO THE REQUIREMENTS OF AASHTO M 31 GRADE 60. UNLESS OTHERWISE NOTED ON THE CONSTRUCTION DRAWINGS, ALL BARS SHALL BE LAPPED AS FOLLOWS:

MODIFICATION CONDITION:	#4 BARS	#5 BARS
1. NONE	16"	19"
2. 12" OF CONCRETE BELOW BAR	20"	25"
3. EPOXY COATED BARS, COVER < 3db, OR CLEAR SPACING < 6db	23"	29"
4. COATED BARS, ALL OTHER CASES	18"	23"
5. CONDITION 2. AND 3.	26"	32"
6. CONDITION 2. AND 4.	24"	30"

ALL OTHER BARS SHALL BE LAPPED AS SHOWN ON THE CONSTRUCTION DRAWINGS.

UTILITIES:

ALL EXISTING UTILITIES SHALL BE LOCATED AND PROTECTED BY THE CONTRACTOR. THE CONTRACTOR IS RESPONSIBLE FOR COORDINATING WITH UTILITY OWNERS.

LUMBER:

LUMBER FOR RAIL POST SHALL BE PRESSURE TREATED VISUALLY GRADED SOUTHERN YELLOW PINE, SELECT STRUCTURAL OR BETTER. LUMBER SHALL BE KILN DRIED TO A MOISTURE CONTENT OF NO MORE THAN 19% AFTER TREATMENT.

ALL TIMBER DIMENSIONS SHOWN ARE NOMINAL.

MINIMUM DESIGN VALUES FOR VISUALLY GRADED SOUTHERN YELLOW PINE						
SIZE	BENDING Fb (PSI)	TENSION PARALLEL TO GRAIN F_t (PSI)	SHEAR PARALLEL TO GRAIN F_v (PSI)	COMPRESSION PERPENDICULAR TO GRAIN $F_{c\perp}$ (PSI)	COMPRESSION PARALLEL TO GRAIN $F_{c\parallel}$ (PSI)	MODULUS OF ELASTICITY E (PSI)
5"X5" AND LARGER	1500	1000	165	375	950	1,500,000

LUMBER FOR HAND RAILS AND RAIL CAPS SHALL BE IPE.

MINIMUM DESIGN VALUES FOR IPE			
SIZE	BENDING Fb (PSI)	CRUSHING STRENGTH (PSI)	MODULUS OF ELASTICITY E (PSI)
ALL	22,500	10,000	2,900,000

IPE TIMBER SHALL BE FINISHED WITH A PRESERVATIVE OIL COATING.

ESTIMATED QUANTITIES
(NOT GUARANTEED)

ITEM DESCRIPTION	QUANTITY	UNITS
BRIDGE EXCAVATION	13	CY
CRUSHED STONE FOR BRIDGE FOUNDATIONS	5	TON
LIGHTWEIGHT AGGREGATE FILL	40	CY
REPOINTING MORTAR JOINTS	650	FT
GEOTEXTILE FABRIC FOR SEPARATION	130	SY
BRIDGE STRUCTURE BRIDGE NO. L-04-030 (8JA)	1	LS

TRAFFIC DATA		
	ROADWAY OVER	ROADWAY UNDER
DESIGN YEAR	N/A	N/A
AVERAGE DAILY TRAFFIC - PRESENT	N/A	6128
AVERAGE DAILY TRAFFIC - DESIGN YEAR	N/A	N/A
DESIGN HOURLY VOLUME	N/A	558
DIRECTIONAL DISTRIBUTION	N/A	53%
TRUCK PERCENTAGE - AVERAGE DAY	N/A	N/A
TRUCK PERCENTAGE - PEAK HOUR	N/A	N/A
DESIGN SPEED	N/A	25 MPH
DIRECTIONAL DESIGN HOURLY VOLUME	N/A	N/A

SEISMIC DESIGN CRITERIA	
DESIGN RETURN PERIOD: PEDESTRIAN BRIDGE	1000
DESIGN SPECTRA	
As	0.222
SDs	0.435
SD1	0.148
SITE CLASS	E
SEISMIC DESIGN CATEGORY (SDC)	A

DATE	DESCRIPTION
SEP. 7, 2024	ISSUED FOR CONSTRUCTION

THIS SHEET IS APPROVED FOR CONSTRUCTION BY MASSDOT
AUTHORIZED SIGNATORY: STATE BRIDGE ENGINEER
USE ONLY PRINTS OF LATEST DATE

608930_BR2-3(L04030).DWG Plotted on 5-Sep-2024 9:47 PM
Fourth Structural Submittal (S4) 07-September-2024

BORING BB–1

MassDOT	TRC Environmental Corporation 650 Suffolk Street Lowell, MA 01854	Phone: (978) 970-5600 Fax: (978) 453-1995 E Mail: gmischel@trcsolutions.com	**Boring No.** BB-1 Scale 1" = 5'

City/Town: Lawrence	Bridge: L-04-030 (8JA)	Project File No: 608930	Contract No:
Project: RR BMRR over HWY, Manchester St.		Date & Time Started: 7-10-17 1145	Total Hours: 2
Groundwater Depth: 17'		Date & Time Completed: 7-10-17 1340	
Coordinates: N 3084683.1	E 742212.8	Driller: Geosearch, Inc.	Driller's Name: Joe Keenan and Josh Houde
Ground Elevation: 73.06'	Inspector's Name: Lauren Hopp	Inspector's Company: TRC Environmental, Corporation	

Sample Number	Depth Range (Feet)	Blow Counts per 6 Inches Coring Times Minute Per Foot	Recovery Inches	Field Description	Strata Changes
				0 - 4": TOPSOIL	4"
S-1	0-2'	WOH 4 5 4	14"	4 - 14": Dry, loose, light brown, FINE TO COARSE SAND, trace fine to medium gravel, trace silt (fill).	
S-2	5'-7'	WOH 2 2 2	16"	Dry, very loose, tan, FINE TO COARSE SAND, trace fine gravel, trace silt. Note: Top 3" contain ash, slag and glass (fill).	
S-3	10'-12'	1 1 2 12	14"	0-8", S-3a: Dry, very loose, tan, FINE TO COARSE SAND, trace fine gravel, trace silt, trace slag (fill). 8-14", S-3b: Moist, very loose, reddish brown, FINE SAND, trace silt and roots, trace gravel, (fill).	
S-4	12'-14'	4 4 4 4	12"	Moist, loose, reddish brown, FINE SAND, trace silt. Note: Top 3" contain slag and ash (fill).	
S-5	14'-16'	3 4 4 3	13"	Moist, loose, tan and black FINE SAND, trace silt, ash, roots, (fill).	
S-6	16'-18'	10 12 12 14	17.5"	Wet, medium dense, tan, FINE SAND, trace silt. Note: Top 4" contain fine sand mixed with ash and slag (fill).	
S-7	18'-20'	3 6 6 8	24"	Wet, medium dense, tan to light brown, FINE TO COARSE SAND, trace silt.	18'
S-8	20'-22'	2 2 2 3	12"	Wet, very loose, tan to light brown, FINE TO COARSE SAND, trace silt.	
S-9	25'-27'	12 21 23 24	15"	0-10", S-9a: Wet, dense, tan to light brown, FINE TO COARSE SAND, trace silt. 10-15", S-9a: Wet, dense, brown to gray FINE TO COARSE SAND, some fine to coarse gravel, some silt.	25.8'
S-10	30-32'	12 10 10 11	12"	Wet, medium dense, brown to gray, FINE TO COARSE SAND, some fine to coarse gravel, some silt.	
				Boring Terminated at 32'.	32'

EL. 75.0
EL. 70.0
EL. 60.0
EL. 50.0
EL. 40.0

EXIST. GROUND SURFACE
EL. = 73.06
EL. 71.80
PROP. BOT. OF
S. ABUT. CAP

BOT. OF EXIST. S. ABUT. FTG.
ASSUMED EL. = 58.3±
EL. 56.06 (OBSERVED 7/10/17)
EL. 55.06

EL. 47.26

EL. 41.06

Remarks: Hollow-stem Auger with automatic hammer to drive SPT split spoons.

Driller notes gravel and difficult drilling around 28 feet bgs.

Protective Device - Stand: Box:
Well Depth: Solid Pipe:
Stick Up Pipe: Screen Pipe:

Type of Drill Rig: 55-LC
Arrow-Board: Signs: Cones:
Hollow Stem Auger.

Sampler Type: SPT Size: 2'
Automatic Hammer Weight: 140 lbs.
Fall: 30"

Core Barrel Type: Size:

Penetration Resistance (N) Guide:

Cohesionless Soils (Sands, Gravels)		Cohesive Soils (Silts, Clays)	
Relative Density	Penetration Resistance	Consistency	Penetration Resistance
Very Loose	0 - 4	Very Soft	0 - 2
Loose	4 - 10	Soft	2 - 4
Medium Dense	10 - 30	Medium Stiff	4 - 8
Dense	30 - 50	Stiff	8 - 15
Very Dense	Over 50	Very Stiff	15 - 30
N=Sum of Second and Third 6" Blow Counts		Hard	Over 30

Terms Used for Second Entry of Descriptions: and = 40-50%, some = 10-40%, trace = 10% or less

BORING BB–2

MassDOT	TRC Environmental Corporation 650 Suffolk Street Lowell, MA 01854	Phone: (978) 970-5600 Fax: (978) 453-1995 E Mail: gmischel@trcsolutions.com	**Boring No.** BB-2 Scale 1" = 5'

City/Town: Lawrence	Bridge: L-04-030 (8JA)	Project File No: 608930	Contract No:
Project: RR BMRR over HWY, Manchester St.		Date & Time Started: 7-7-17 0930	Total Hours: 2.25
Groundwater Depth: 17'		Date & Time Completed: 7-7-17 1140	
Coordinates: N 3084751.9	E 742160.5	Driller: Geosearch, Inc.	Driller's Name: Joe Keenan and Josh Houde
Ground Elevation: 73.71'	Inspector's Name: Lauren Hopp	Inspector's Company: TRC Environmental, Corporation	

Sample Number	Depth Range (Feet)	Blow Counts per 6 Inches Coring Times Minute Per Foot	Recovery Inches	Field Description	Strata Changes
S-1	0-2'	2 4 2 3	11"	0 - 4": TOPSOIL	4"
				4 - 11": Dry, loose, tan to light brown, FINE SAND, trace fine to medium gravel, trace silt (fill).	
S-2	5'-7'	3 3 2 2	11"	Moist, loose, tan to light brown, FINE SAND, trace fine to medium gravel, trace silt, trace ash. (fill).	
S-3	10'-12'	1 1 2 2	12"	Moist, very loose, tan and black, FINE SAND, trace silt. (fill)	
S-4	12'-14'	2 2 2 2	9.5"	Moist, very loose, tan and black, FINE SAND, trace silt, trace glass.(fill).	
S-5	14'-16'	1 WOH 1 WOH	13.5"	Moist, very loose, tan, FINE SAND, trace silt (fill).	
S-6	16'-18'	2 2 WOH WOH	10"	Moist to wet, very loose, tan, FINE SAND, some silt, (fill).	
S-7	18'-20'	WOH WOH 1 for 12"	24"	0-2", S-7a: Wet, very loose, tan, FINE SAND, trace silt, (fill). 2-24", S-7b: Wet, very soft, black, ORGANIC SILT.	18.2'
S-8	20'-22'	WOH	20"	0-20" S-8: Wet, very soft, dark black, ORGANIC SILT, trace sand.	
S-9	22'-24'	WOH	24"	0-24" S-9: Wet, very loose, black, FINE SAND and, ORGANIC SILT.	
S-10	24'-26'	6 7 8 7	24"	0-12" S-10a: Wet, Stiff, Black, ORGANIC SILT. 12-24", S-10b: Wet, medium dense, tan, FINE SAND, trace silt.	25'
S-11	30-32'	16 15 15 14	5"	Wet, dense, tan to light brown, FINE TO COARSE SAND, some gravel, some silt.	
S-12	32'-34'	16 15 30 20	20"	Wet, dense, FINE TO COARSE SAND AND FINE TO MEDIUM GRAVEL, some silt, trace clay.	
				Boring Terminated at 34'.	34'

EL. 75.0
EL. 70.0
EL. 60.0
EL. 50.0
EL. 40.0

EXIST. GROUND SURFACE
EL. = 73.71
EL. 71.77
PROP. BOT. OF
N. ABUT. CAP

BOT. OF EXIST. N. ABUT. FTG.
ASSUMED EL. = 58.3±
EL. 56.71 (OBSERVED 7/7/17)

EL. 48.71

EL. 39.71

Remarks: Hollow-stem Auger with automatic hammer to drive SPT split spoons.

Driller notes gravel and difficult drilling around 28'.

Protective Device - Stand: Box:
Well Depth: Solid Pipe:
Stick Up Pipe: Screen Pipe:

Type of Drill Rig: 850 Track Rig
Arrow-Board: Signs: Cones:
Hollow Stem Auger.

Sampler Type: SPT Size: 2'
Automatic Hammer Weight: 140 lbs.
Fall: 30"

Core Barrel Type: Size:

Penetration Resistance (N) Guide:

Cohesionless Soils (Sands, Gravels)		Cohesive Soils (Silts, Clays)	
Relative Density	Penetration Resistance	Consistency	Penetration Resistance
Very Loose	0 - 4	Very Soft	0 - 2
Loose	4 - 10	Soft	2 - 4
Medium Dense	10 - 30	Medium Stiff	4 - 8
Dense	30 - 50	Stiff	8 - 15
Very Dense	Over 50	Very Stiff	15 - 30
N=Sum of Second and Third 6" Blow Counts		Hard	Over 30

Terms Used for Second Entry of Descriptions: and = 40-50%, some = 10-40%, trace = 10% or less

LAWRENCE
LMRC RAIL TRAIL OVER MANCHESTER STREET

STATE	FED. AID PROJ. NO.	SHEET NO.	TOTAL SHEETS
MA	CMQ-003S(733)X	134	245
PROJECT FILE NO.	608930		

BORING LOGS

BORING NOTES:

1. LOCATION OF BORINGS ARE SHOWN ON THE PLANS THUS: ⌖
2. BORINGS ARE TAKEN FOR PURPOSE OF DESIGN AND SHOW CONDITIONS AT BORING POINTS ONLY, BUT DO NOT NECESSARILY SHOW THE NATURE OF THE MATERIALS TO BE ENCOUNTERED DURING CONSTRUCTION.
3. WATER LEVELS SHOWN ON THE BORING LOGS WERE OBSERVED AT THE TIME OF TAKING BORINGS AND DO NOT NECESSARILY SHOW THE TRUE GROUND WATER LEVEL.
4. FIGURES IN COLUMNS INDICATE NUMBER OF BLOWS REQUIRED TO DRIVE A 1 $\frac{3}{8}$"I.D. SPLIT SPOON SAMPLER 6" USING A 140 POUND WEIGHT FALLING 30".
5. BORING SAMPLES ARE STORED AT A STORAGE FACILITY LOCATED ON ROUTE 114 (219 WINTHROP AVE) IN LAWRENCE, MA. THE CONTRACTOR MAY EXAMINE THE SOIL AND ROCK SAMPLES BY CONTACTING THE MASSDOT GEOTECHNICAL SECTION AT 10 PARK PLAZA, BOSTON, MA.
6. ALL BORINGS WERE MADE IN JULY 2017.
7. BORINGS WERE MADE BY GEOSEARCH, INC, 11 CHOCKSETT RD, STERLING, MA 01564.
8. THE NORTH AMERICAN VERTICAL DATUM (NAVD) OF 1988 IS USED THROUGHOUT.

DATE	DESCRIPTION
SEP. 7, 2024	ISSUED FOR CONSTRUCTION

THIS SHEET IS APPROVED FOR CONSTRUCTION BY MASSDOT
AUTHORIZED SIGNATORY: STATE BRIDGE ENGINEER
USE ONLY PRINTS OF LATEST DATE

608930_BR2-3(L04030).DWG Plotted on 5-Sep-2024 9:47 PM
Fourth Structural Submittal (S4) 07-September-2024

LAWRENCE
LMRC RAIL TRAIL OVER MANCHESTER STREET

STATE	FED. AID PROJ. NO.	SHEET NO.	TOTAL SHEETS
MA	CMQ-003S(733)X	135	245
PROJECT FILE NO.	608930		

DEMOLITION DETAILS

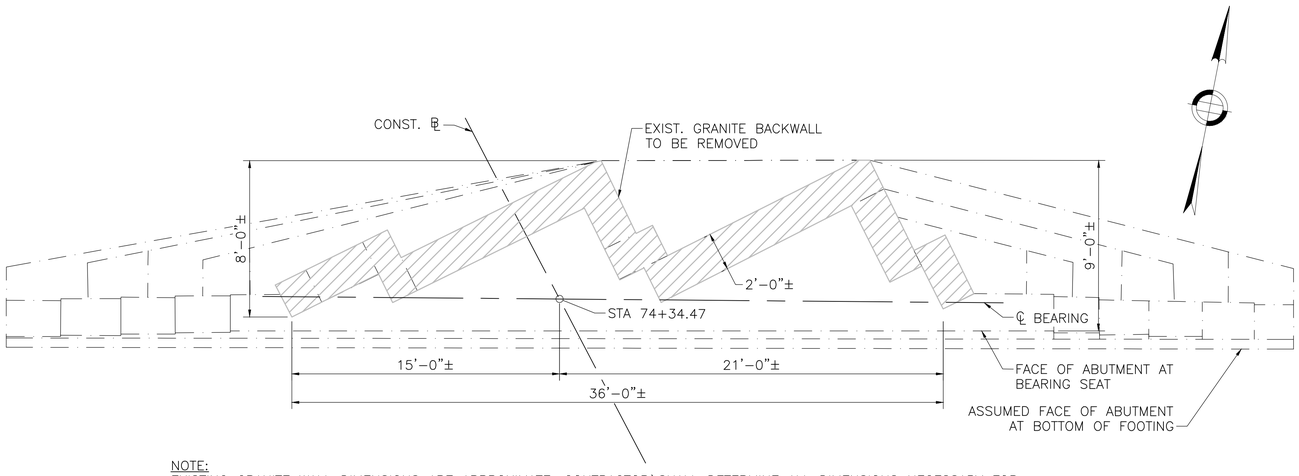

NOTE:
EXISTING GRANITE WALL DIMENSIONS ARE APPROXIMATE. CONTRACTOR SHALL DETERMINE ALL DIMENSIONS NECESSARY FOR COMPLETION OF ALL WORK BY FIELD MEASUREMENTS AND SURVEY.

PLAN – EXISTING NORTH ABUTMENT
(SOUTH ABUTMENT SIMILAR)
SCALE: ¼" = 1'-0"

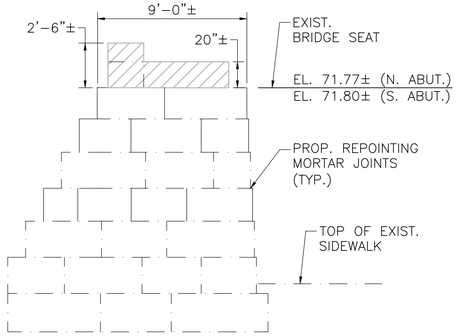

EXISTING ABUTMENT SECTION
SCALE: ¼" = 1'-0"

NOTES:
1. FOR REPOINTING REQUIREMENTS, SEE SPECIAL PROVISIONS, ITEM 690.01.
2. REPOINTING MORTAR SHALL BE LISTED ON THE CURRENT MASSDOT QUALIFIED MATERIALS LIST.

LEGEND:

DENOTES LIMIT OF EXISTING SUBSTRUCTURE TO BE DEMOLISHED

SEP. 7, 2024	ISSUED FOR CONSTRUCTION
DATE	DESCRIPTION

THIS SHEET IS APPROVED FOR CONSTRUCTION BY MASSDOT
AUTHORIZED SIGNATORY: STATE BRIDGE ENGINEER
USE ONLY PRINTS OF LATEST DATE

608930_BR4(L04030).DWG Plotted on 5-Sep-2024 9:47 PM
07-September-2024 Fourth Structural Submittal (S4)

LAWRENCE
LMRC RAIL TRAIL OVER MANCHESTER STREET

STATE	FED. AID PROJ. NO.	SHEET NO.	TOTAL SHEETS
MA	CMQ-003S(733)X	136	245
PROJECT FILE NO.	608930		

PLAN AND ELEVATION

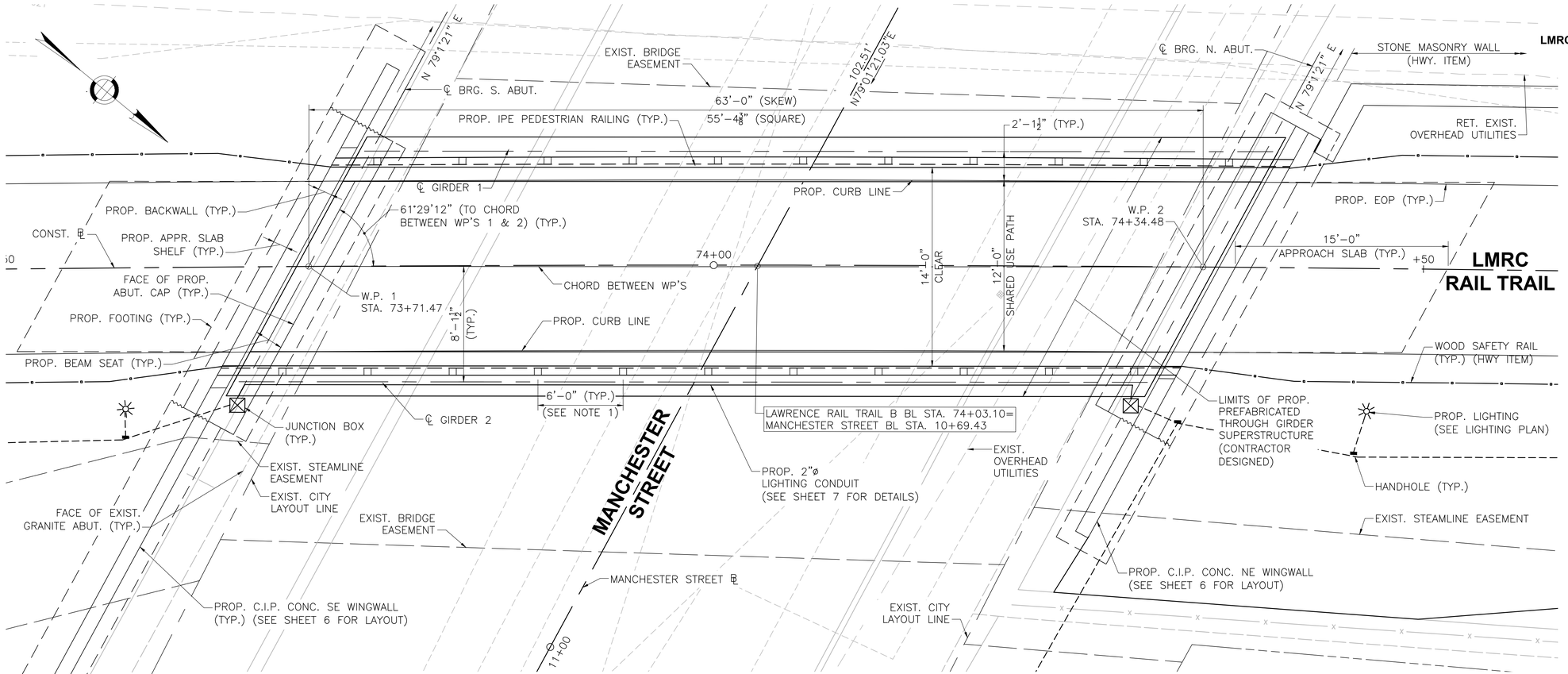

PLAN

SCALE: ¼"=1'-0"

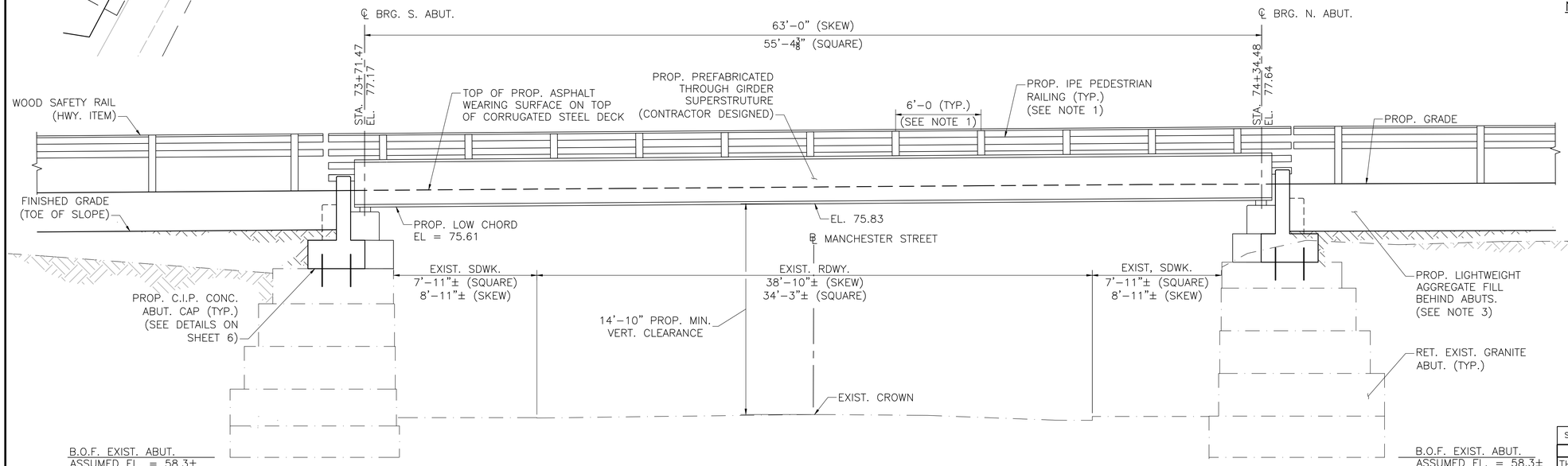

NOTE:
THE BOTTOM OF THE FOOTING ELEVATIONS PROVIDED ARE ASSUMED. THE ACTUAL BOTTOM ELEVATION IS UNKNOWN.

EAST ELEVATION

SCALE: ¼" = 1'-0"

NOTES:

1. PEDESTRIAN RAILING TO BE PROVIDED BY BRIDGE FABRICATOR AND SHALL BE CONSISTENT AND COMPATIBLE WITH WOOD SAFETY RAIL, SEE HIGHWAY PLANS. POST SPACING SHOWN MAY BE ADJUSTED AS NEEDED BY THE BRIDGE FABRICATOR BUT SHALL NOT EXCEED 6'-0".
2. PEDESTRIAN RAILING SHALL MEET ADA AND MA AAB REQUIREMENTS.
3. LIMITS OF LIGHTWEIGHT AGGREGATE FILL AND GRAVEL BORROW FOR BACKFILLING SHOWN ON SHEET 7.

DATE	DESCRIPTION
SEP. 7, 2024	ISSUED FOR CONSTRUCTION

THIS SHEET IS APPROVED FOR CONSTRUCTION BY MASSDOT
AUTHORIZED SIGNATORY: STATE BRIDGE ENGINEER
USE ONLY PRINTS OF LATEST DATE

608930_BR5(L04030).DWG Plotted on 5-Sep-2024 9:48 PM
07-September-2024 Fourth Structural Submittal (S4)

LAWRENCE
LMRC RAIL TRAIL OVER MANCHESTER STREET

STATE	FED. AID PROJ. NO.	SHEET NO.	TOTAL SHEETS
MA	CMQ-003S(733)X	137	245
PROJECT FILE NO.	608930		

ABUTMENT PLAN AND ELEVATION

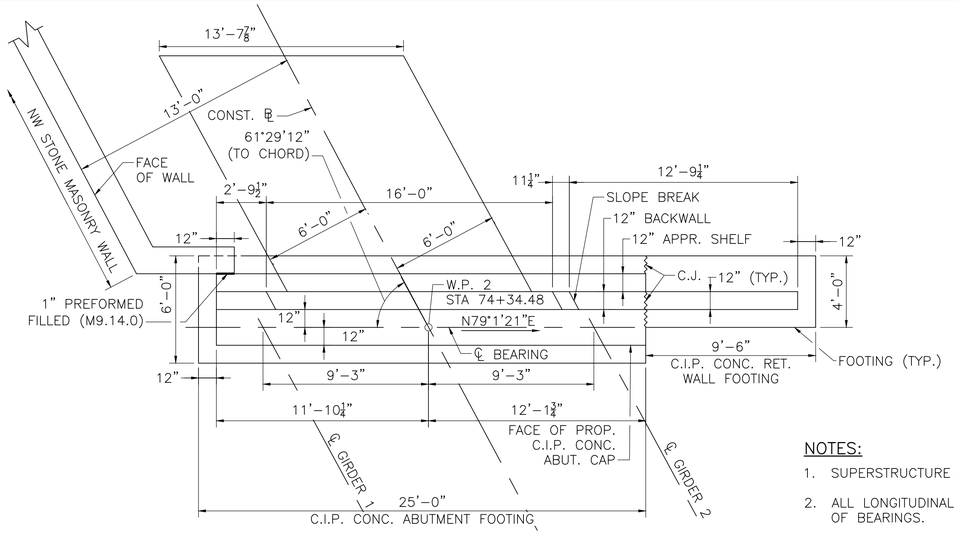

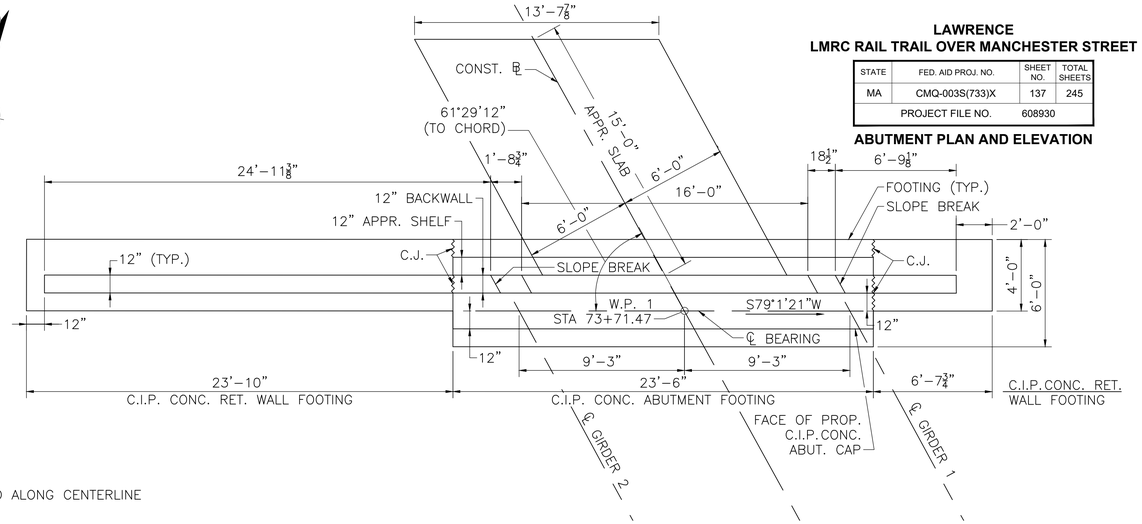

PLAN – NORTH ABUTMENT

SCALE: ¼" = 1'–0"

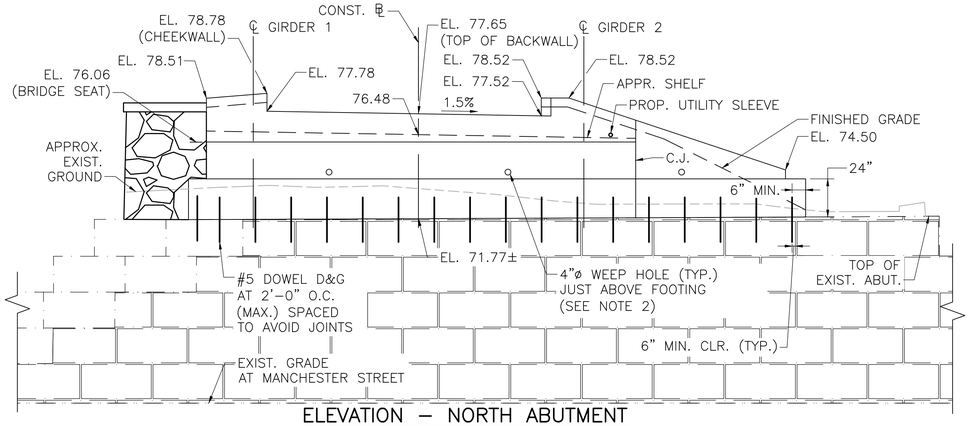

ELEVATION – NORTH ABUTMENT

SCALE: ¼" = 1'–0"

PLAN – SOUTH ABUTMENT

SCALE: ¼" = 1'–0"

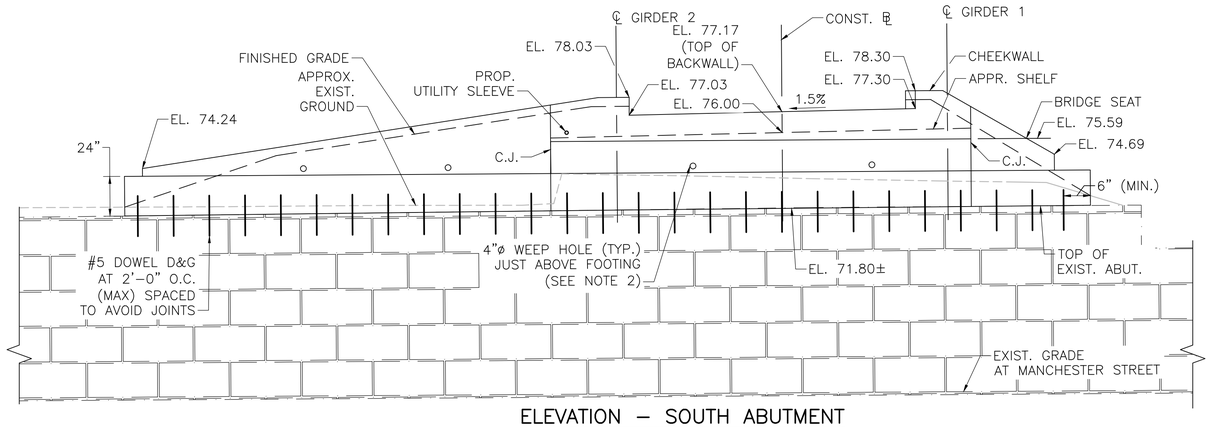

ELEVATION – SOUTH ABUTMENT

SCALE: ¼" = 1'–0"

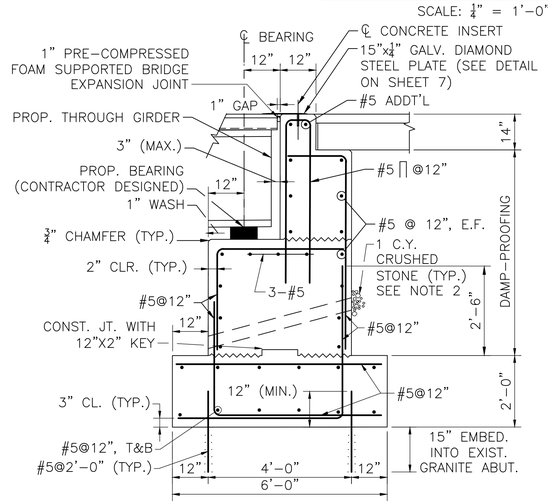

TYPICAL ABUTMENT SECTION

SCALE: ½" = 1'–0"

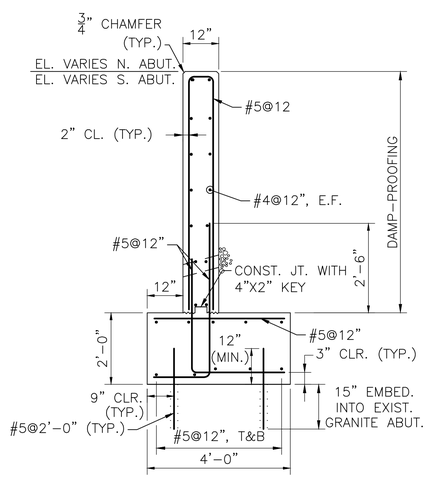

TYPICAL WINGWALL SECTION

SCALE: ½" = 1'–0"

NOTES:

1. SUPERSTRUCTURE NOT SHOWN FOR CLARITY
2. ALL LONGITUDINAL DIMENSIONS ARE MEASURED ALONG CENTERLINE OF BEARINGS.
3. ALL ABUTMENT AND WINGWALL ELEVATIONS ARE TAKEN AT THE BACK FACE OF THE WALLS.

ABUTMENT AND WINGWALL NOTES:

1. LIMITS OF DAMP–PROOFING SHALL INCLUDE BACK OF ABUTMENT, WINGWALL, AND TOP OF FOOTING HEEL.
2. WEEP HOLES SPACED AT 10'–0" O.C. PROVIDE 1 CUBIC YARD OF CRUSHED STONE ON BACK SIDE, AS DETAILED.
3. ALL CONCRETE SHALL BE 5000 PSI, 3/4 INCH, 585 HP CEMENT CONCRETE.
4. BRIDGE SEAT ELEVATIONS ARE BOTTOM OF MASONRY PLATE ELEVATIONS AT CENTERLINE OF BEARING. THE BRIDGE SEAT ELEVATIONS SHOWN ARE PRELIMINARY AND BASED ON AN ASSUMED MAXIMUM STRUCTURE DEPTH OF 18" FROM TOP OF DECK AT ℄ OF CONSTRUCTION TO BOTTOM OF MASONRY PLATE AND AN ASSUMED BEARING DEPTH OF 2½". ACTUAL ELEVATION SHALL BE BASED ON CONTRACTOR DESIGN CHOSEN TYPE AS REQUIRED BY THE BRIDGE MANUFACTURER. MINIMUM LOW CHORD ELEVATION IS SHOWN ON THE ELEVATION VIEW. THE CONTRACTOR SHALL DETERMINE THE FINAL BRIDGE SEAT ELEVATIONS PRIOR TO SUBMITTING REINFORCING STEEL FABRICATION DRAWINGS.
5. THE FACTORED BEARING PRESSURE AT THE EXISTING STONE ABUTMENT = 6.35 KSF, PER AASHTO LRFD BRIDGE DESIGN SPECIFICATIONS STRENGTH IV LIMIT STATE.

   FACTORED BEARING RESISTANCE AT THE EXISTING STONE ABUTMENTS = 7.2 KSF. FACTORED BEARING RESISTANCE IS THE PRODUCT OF THE NOMINAL BEARING RESISTANCE AND A RESISTANCE FACTOR OF 0.45.
6. SEE MISCELLANEOUS DETAILS, SHEET 7 OF 7, FOR LIMITS OF LIGHTWEIGHT AGGREGATE FILL. USE GRAVEL BORROW FOR AREA BEYOND LIMITS OF LIGHTWEIGHT AGGREGATE FILL.
7. THE FACTORED BEARING PRESSURE AT THE EXISTING STONE WINGWALLS = 5.53 KSF, PER AASHTO LRFD BRIDGE DESIGN SPECIFICATIONS STRENGTH IV LIMIT STATE.

   FACTORED BEARING RESISTANCE AT THE EXISTING STONE WINGWALLS = 8.1 KSF. FACTORED BEARING RESISTANCE IS THE PRODUCT OF THE NOMINAL BEARING RESISTANCE AND A RESISTANCE FACTOR OF 0.45.
8. THE FACTORED BEARING PRESSURE AT THE NORTHWEST STONE MASONRY WINGWALL = 2.16 KSF, PER AASHTO LRFD BRIDGE DESIGN SPECIFICATIONS STRENGTH I LIMIT STATE.

   FACTORED BEARING RESISTANCE AT THE NORTHWEST STONE MASONRY WINGWALL = 11.3 KSF. FACTORED BEARING RESISTANCE IS THE PRODUCT OF THE NOMINAL BEARING RESISTANCE AND A RESISTANCE FACTOR OF 0.45.
9. DOWELS EMBEDDED INTO THE EXISTING BLOCK WALLS SHALL BE LOCATED A MINIMUM OF 6" AWAY FROM EXISTING MASONRY JOINTS. IN NO CASE SHALL THE DOWELS BE SPACED FURTHER THAN 2'–0" ON CENTER.

SEP. 7, 2024	ISSUED FOR CONSTRUCTION
DATE	DESCRIPTION

THIS SHEET IS APPROVED FOR CONSTRUCTION BY MASSDOT AUTHORIZED SIGNATORY: STATE BRIDGE ENGINEER

USE ONLY PRINTS OF LATEST DATE

608930_BR6(L04030).DWG Plotted on 5-Sep-2024 9:48 PM
Fourth Structural Submittal (S4) 07-September-2024

STATE	FED. AID PROJ. NO.	SHEET NO.	TOTAL SHEETS
MA	CMQ-003S(733)X	138	245
	PROJECT FILE NO. 608930		

CROSS SECTION & MISCELLANEOUS DETAILS

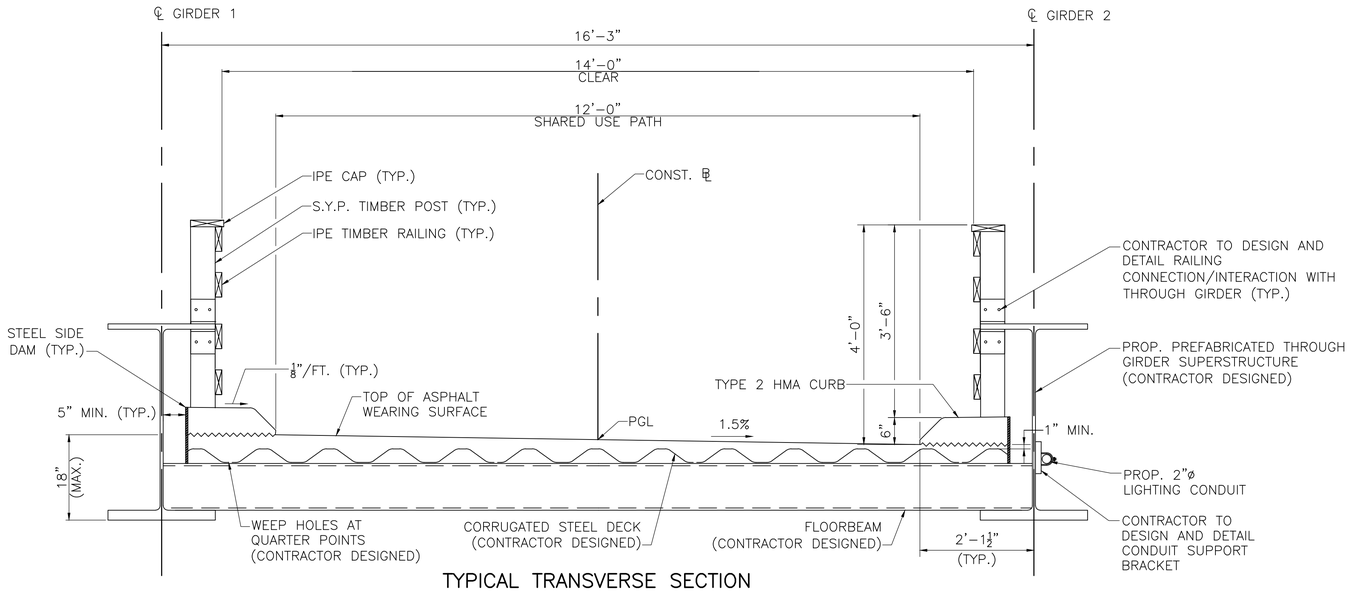

TYPICAL TRANSVERSE SECTION
(LOOKING UPSTATION)
SCALE: 3/4" = 1'–0"

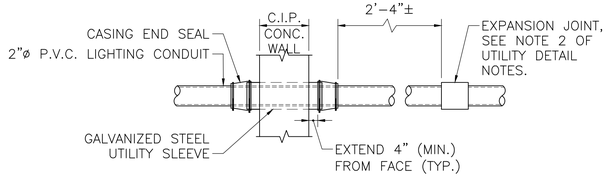

UTILITY DETAIL NOTES:

1. UTILITY SLEEVES SHALL BE STEEL PIPE CONFORMING TO ASTM A53, TYPE S, GRADE B, STANDARD WEIGHT, PLAIN ENDS, HOT–DIP GALVANIZED AND SHALL BE SET IN THE FORMS PRIOR TO PLACING CONCRETE RETAINER.
2. PROVIDE EXPANSION JOINT IN FRONT OF C.I.P. CONCRETE WALL.
3. BRIDGE EXPANSION JOINT NOT SHOWN FOR CLARITY.

UTILITY SLEEVE DETAIL
NOT TO SCALE

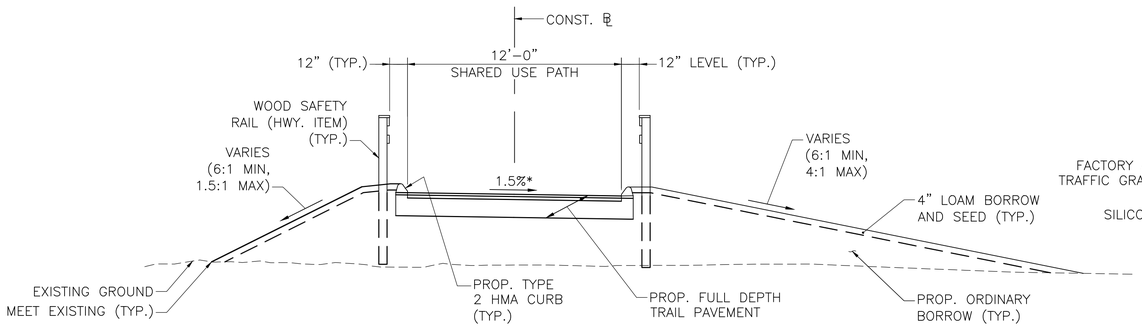

* TOLERANCE FOR CONSTRUCTION ±0.5%

TYPICAL APPROACH SECTION
SCALE: 1/4" = 1'–0"

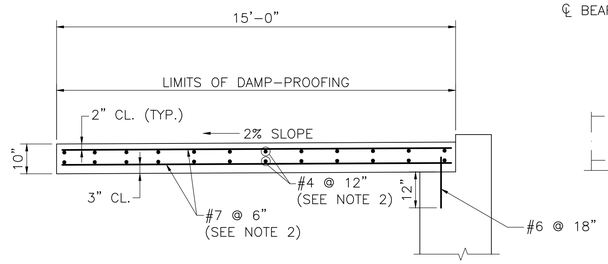

APPROACH SLAB NOTES:

1. APPROACH SLAB TO BE 5000 PSI, 3/4 INCH, 585 HP CEMENT CONCRETE.
2. PLACE LONGITUDINAL REINFORCEMENT PARALLEL TO CENTERLINE OF CONSTRUCTION. PLACE TRANSVERSE REINFORCEMENT PARALLEL TO ABUTMENT.

APPROACH SLAB DETAILS
SCALE: 1/2" = 1'–0"

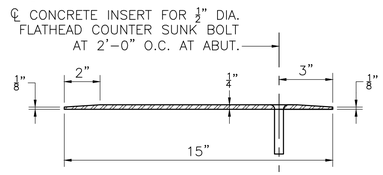

DIAMOND STEEL PLATE DETAIL
SCALE: 3" = 1'–0"

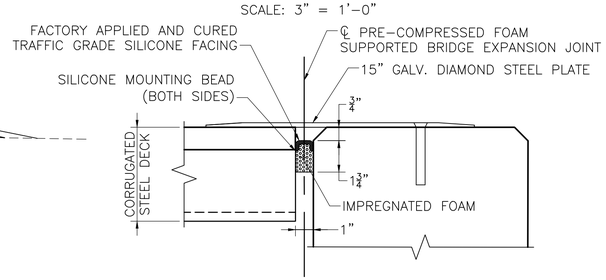

DIAMOND STEEL PLATE DETAIL
SCALE: 3" = 1'–0"

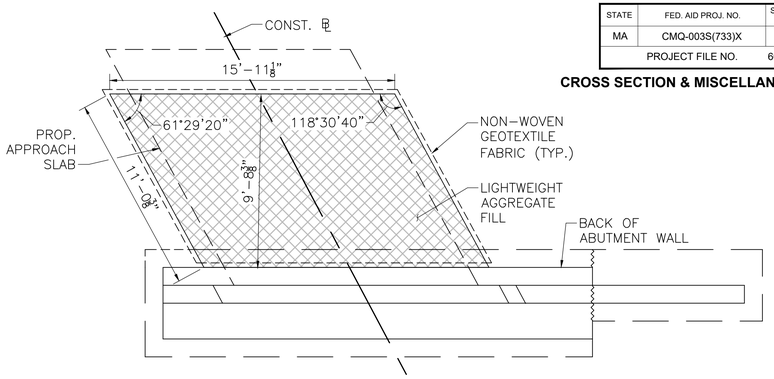

LIGHTWEIGHT AGGREGATE FILL PLAN VIEW
SCALE: 1" = 4'

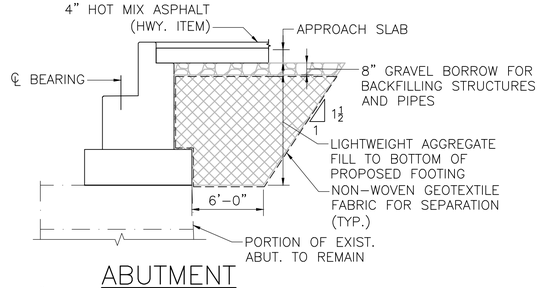

ABUTMENT

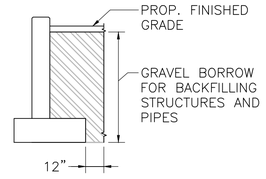

WINGWALL

NOTES:

1. HATCHED AREA INDICATES LIMITS OF BACKFILL.
2. LIGHTWEIGHT AGGREGATE FILL SHALL BE EXPANDED SHALE AGGREGATE.

PAYMENT LIMITS FOR LIGHTWEIGHT AGGREGATE FILL AND GRAVEL BORROW
NOT TO SCALE

PREFABRICATED BRIDGE NOTES:

1. BRIDGE SHALL BE DESIGNED IN ACCORDANCE WITH THE 2009 AASHTO LRFD GUIDE SPECIFICATIONS FOR THE DESIGN OF PEDESTRIAN BRIDGES WITH INTERIM SPECIFICATIONS THROUGH 2015 FOR PEDESTRIAN LOADING OF 90 PSF AND H10 LOADING.
2. TOTAL ASSUMED PREFABRICATED WEIGHT OF SUPERSTRUCTURE, INCLUDING DECK AND ASPHALT WEARING SURFACE, SHALL NOT EXCEED 50 KIPS WITHOUT WRITTEN APPROVAL OF THE ENGINEER.
3. STRUCTURAL MEMBERS ARE SHOWN FOR CONCEPTUAL PRESENTATION ONLY AND TO BE FINALIZED BY APPROVED BRIDGE MANUFACTURER.
4. PREFABRICATED BRIDGE SHALL BE GALVANIZED AND PAINTED.
5. CONTRACTOR'S DESIGN SHALL INCLUDE ALL BEARING DEVICES AND VERIFICATION OF ALL ELEVATIONS TO ACCOMMODATE THE DESIGN.
6. ASPHALT WEARING SURFACE SHALL CONFORM TO THE REQUIREMENTS OF SUBSECTION 450 OF THE STANDARD SPECIFICATIONS.

SEP. 7, 2024	ISSUED FOR CONSTRUCTION
DATE	DESCRIPTION
THIS SHEET IS APPROVED FOR CONSTRUCTION BY MASSDOT AUTHORIZED SIGNATORY:	STATE BRIDGE ENGINEER
USE ONLY PRINTS OF LATEST DATE	

608930_BR7(L04030).DWG Plotted on 5-Sep-2024 9:49 PM
07-September-2024 Fourth Structural Submittal (S4)

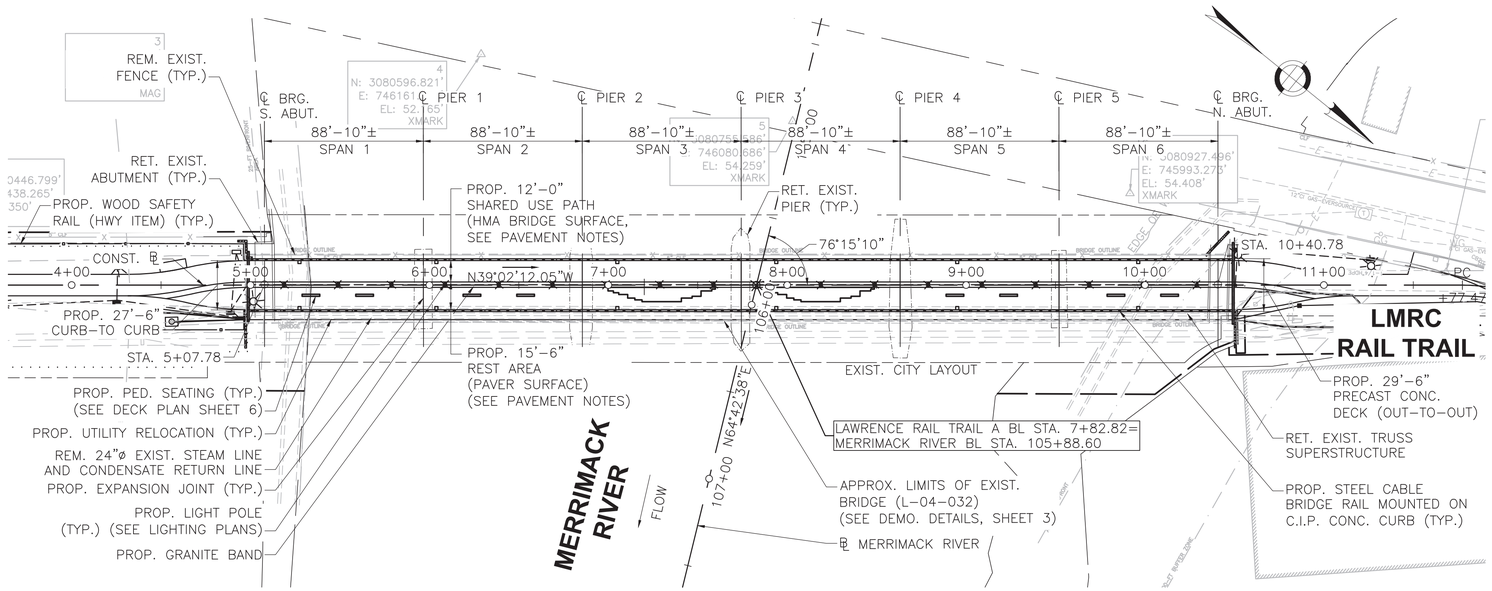

KEY PLAN
SCALE: 1"=40'

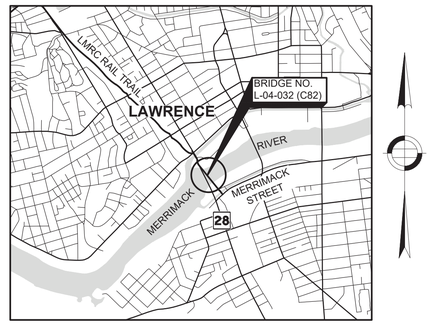

LOCUS MAP
SCALE: 1"=2000'

LAWRENCE
LMRC RAIL TRAIL OVER MERRIMACK RIVER

STATE	FED. AID PROJ. NO.	SHEET NO.	TOTAL SHEETS
MA	CMQ-003S(733)X	139	245
	PROJECT FILE NO.	608930	

KEY PLAN, PROFILES, LOCUS AND INDEX

INDEX OF SHEETS

SHEET NUMBER	SHEET TITLE
1	KEY PLAN, PROFILES, LOCUS AND INDEX
2	GENERAL NOTES
3	DEMOLITION DETAILS
4	PLAN AND ELEVATION
5	FRAMING PLAN
6	DECK PLAN
7	STRINGER REPLACEMENT DETAILS
8	DECK DETAILS (1 OF 3)
9	DECK DETAILS (2 OF 3)
10	DECK DETAILS (3 OF 3)
11	MISCELLANEOUS DETAILS
12	EXPANSION JOINT DETAILS
13	RAILING DETAILS (1 OF 2)
14	RAILING DETAILS (2 OF 2)

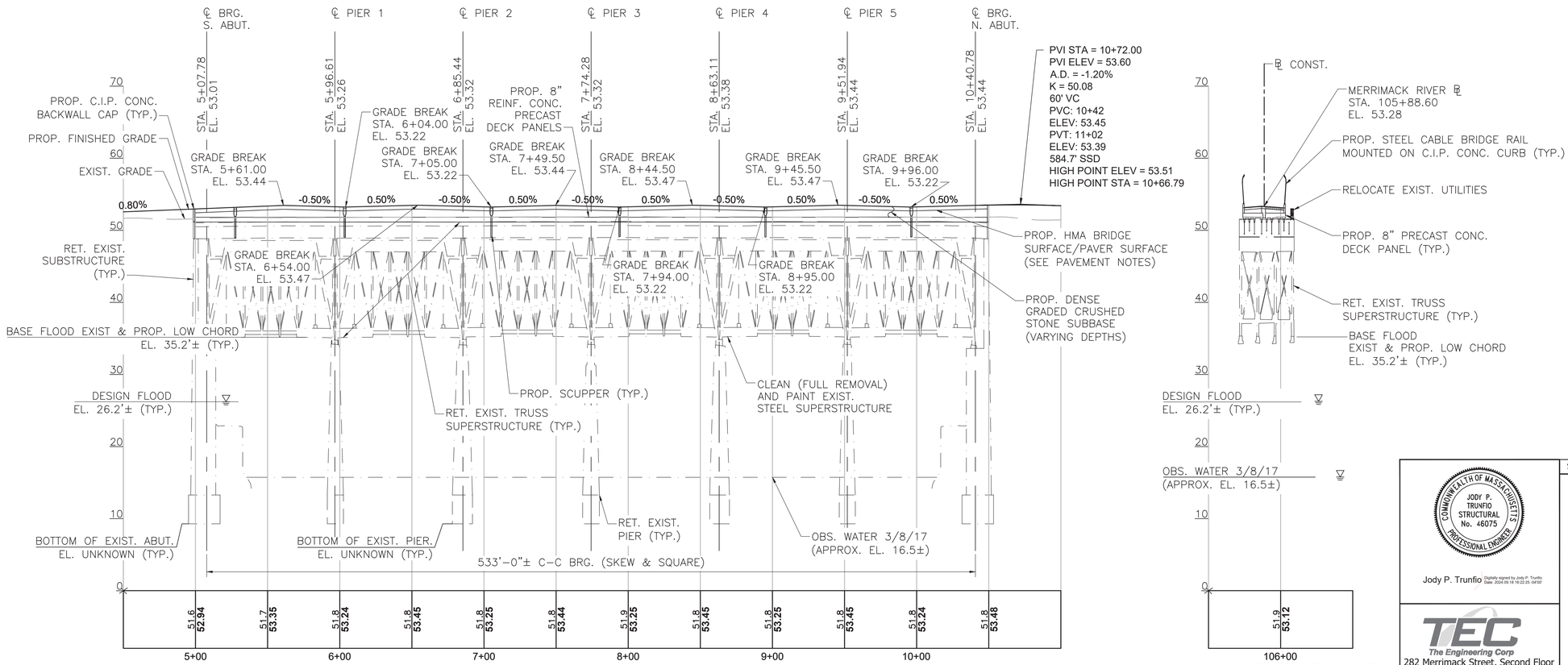

LMRC RAIL TRAIL PROFILE
HORIZONTAL SCALE: 1" = 40'
VERTICAL SCALE" 1" = 8'

MERRIMACK RIVER PROFILE
HORIZONTAL SCALE: 1" = 40'
VERTICAL SCALE" 1" = 8'

COMMONWEALTH OF MASSACHUSETTS
JODY P. TRUNFIO
STRUCTURAL
No. 46075
PROFESSIONAL ENGINEER

Jody P. Trunfio Digitally signed by Jody P. Trunfio Date: 2024.09.18 16:22:25 -04'00'

TEC The Engineering Corp
282 Merrimack Street, Second Floor
Lawrence, MA 01843
978-794-1792

SEP. 7, 2024 | ISSUED FOR CONSTRUCTION

MassDOT Massachusetts Department of Transportation Highway Division

PROPOSED BRIDGE REHABILITATION
LAWRENCE
LMRC RAIL TRAIL
OVER MERRIMACK RIVER

MASSACHUSETTS DEPARTMENT OF TRANSPORTATION
HIGHWAY DIVISION
10 PARK PLAZA BOSTON, MASS

Alexander K. Bardow, P.E. Digitally signed by Alexander K. Bardow, P.E. Date: 2024.09.20 09:34:01 -04'00'
STATE BRIDGE ENGINEER

Carrie Lavallee, P.E. Digitally signed by Carrie Lavallee, P.E. Date: 2024.09.23 16:57:13 -04'00'
CHIEF ENGINEER

608930_BR1(L04032).DWG Plotted on 5-Sep-2024 9:56 PM

07-September-2024 Fourth Structural Submission (S4)

LAWRENCE
LMRC RAIL TRAIL OVER MERRIMACK RIVER

STATE	FED. AID PROJ. NO.	SHEET NO.	TOTAL SHEETS
MA	CMQ-003S(733)X	140	245
PROJECT FILE NO.	608930		

GENERAL NOTES

DESIGN:

IN ACCORDANCE WITH THE 2020 AASHTO LRFD BRIDGE DESIGN SPECIFICATIONS, 9TH EDITION, AND THE 2ND EDITION AASHTO LRFD GUIDE SPECIFICATIONS FOR THE DESIGN OF PEDESTRIAN BRIDGES WITH INTERIM REVISIONS THROUGH 2015, FOR H10 LOADING AND 90 PSF PEDESTRIAN LOADING.

EXISTING CONDITIONS:

ALL DIMENSIONS AND DETAILS OF THE EXISTING STRUCTURE SHOWN ON THESE CONSTRUCTION DRAWINGS ARE NOT GUARANTEED. THE CONTRACTOR SHALL DETERMINE AND ESTABLISH ALL DIMENSIONS AND EXISTING DETAILS NECESSARY FOR THE COMPLETION OF ALL WORK BY FIELD MEASUREMENTS AND SURVEY. THE CONTRACTOR SHALL BE RESPONSIBLE FOR THE ADEQUACY AND ACCURACY THEREOF, AND SHALL NOT ORDER ANY MATERIAL OR COMMENCE FABRICATION UNTIL HE/SHE HAS MADE THE REQUIRED MEASUREMENTS ON THE ACTUAL STRUCTURE AND THE EXTENT OF THE PROPOSED WORK HAS BEEN APPROVED BY THE ENGINEER.

SURVEY BENCHMARKS:

BENCHMARK 2: MAG NAIL (38)
N: 30080446.799
E: 746438.265
ELEVATION= 51.350'

BENCHMARK 3: MAG NAIL (40)
N: 3080483.024
E: 746268.082
ELEVATION= 44.630'

BENCHMARK 4: XMARK
N: 3080596.821
E: 746161.334
ELEVATION= 52.165'

BENCHMARK 5: XMARK
N: 3080755.586
E: 746080.686
ELEVATION= 54.259'

BENCHMARK 6: XMARK
N: 3080927.496
E: 745993.273
ELEVATION= 54.408'

ELEVATIONS ARE BASED ON THE NORTH AMERICAN VERTICAL DATUM (NAVD) OF 1988.

THE CONTRACTOR SHALL BE RESPONSIBLE FOR CONDUCTING A SURVEY TO FIELD VERIFY ALL EXISTING CONDITIONS AND DIMENSIONS PRIOR TO THE FABRICATION OF ANY PRECAST CONCRETE ELEMENTS.

SCALES:

SCALES NOTED ON THE PLANS ARE NOT APPLICABLE TO REDUCED SIZE PRINTS. DIVIDE SCALES BY 2 FOR HALF-SIZE PRINTS (A3).

UTILITIES:

PRIOR TO CONSTRUCTION, THE CONTRACTOR SHALL LOCATE AND PROTECT FROM DAMAGE ALL UTILITIES THAT ARE TO REMAIN IN PLACE.

GEOTECHNICAL:

NO GEOTECHNICAL TESTING WAS PERFORMED AT THIS LOCATION.

SEE ABUTMENT REUSE MEMO, DATED FEBRUARY 2021 BY TEC, INC.

STRUCTURAL STEEL:

1. ALL STRUCTURAL STEEL SHALL BE AASHTO M270 (A709) GRADE 50, UNLESS OTHERWISE NOTED.
2. ALL BOLTS SHALL BE IN ACCORDANCE WITH ASTM F3125 GRADE 325 UNLESS OTHERWISE NOTED.
3. ALL BOLT HOLES SHALL BE $\frac{15}{16}$"ø UNLESS NOTED OTHERWISE.
4. ALL BOLTED CONNECTIONS SHALL BE CONSIDERED SLIP CRITICAL CONNECTIONS WITH CLASS C FAYING SURFACES.
5. SHEAR CONNECTORS SHALL BE IN ACCORDANCE WITH AASHTO M169 GRADES 1015 OR 1020.
6. ALL PROPOSED STRUCTURAL STEEL SHALL BE HOT DIP GALVANIZED.
7. ANCHOR BOLTS FOR LIGHT POLE BASES SHALL BE SPECIFIED BY THE MANUFACTURER.

ALL EXISTING AND PROPOSED STRUCTURAL STEEL SHALL BE PAINTED. PAINT COLOR SHALL BE COORDINATED WITH THE ENGINEER AND THE CITY OF LAWRENCE. THE CONTRACTOR SHALL USE FED. STANDARD 595 COLORS. INTERMEDIATE AND FINISH COATS SHALL NOT BE APPLIED UNTIL THE STRINGER REPLACEMENTS ARE COMPLETE. NOTE THAT THE TOP OF THE TOP FLANGES OF THE EXISTING STRINGERS AND PROPOSED STRINGERS SHALL BE PRIMED ONLY. PRIMER APPLIED BEFORE THESE ACTIVITIES SHALL BE BLAST CLEANED AND REPRIMED BY THE CONTRACTOR.

INSPECTIONS HAVE NOT INDICATED THAT THE BRIDGE IS PAINTED. HOWEVER, BASED ON THE AGE OF CONSTRUCTION, THE POTENTIAL EXISTS FOR THE PRESENCE OF LEAD PAINT ON COMPONENTS THAT MAY NOT HAVE BEEN OBSERVED DURING INSPECTIONS. THE CONTRACTOR IS ALERTED TO THIS POTENTIAL AND SHOULD CONFIRM THERE ARE NO PAINTED COMPONENTS OF THE BRIDGE PRIOR TO BLAST CLEANING. REFER TO THE SPECIAL PROVISIONS FOR MORE INFORMATION.

TEMPORARY PROTECTIVE SHIELDING:

THE CONTRACTOR SHALL INSTALL SHIELDING PRIOR TO START OF WORK AND SHALL ONLY BE REMOVED UPON APPROVAL OF THE ENGINEER.

REINFORCEMENT:

ALL REINFORCING STEEL SHALL BE EPOXY COATED.

REINFORCING STEEL SHALL CONFORM TO THE REQUIREMENTS OF AASHTO M 31 GRADE 60. UNLESS OTHERWISE NOTED ON THE CONSTRUCTION DRAWINGS, ALL BARS SHALL BE LAPPED AS FOLLOWS:

MODIFICATION CONDITION:	#4 BARS	#5 BARS	#6 BARS
1. NONE	16"	19"	23"
2. 12" OF CONCRETE BELOW BAR	20"	25"	30"
3. EPOXY COATED BARS, COVER < 3db, OR CLEAR SPACING < 6db	23"	29"	34"
4. COATED BARS, ALL OTHER CASES	18"	23"	27"
5. CONDITION 2. AND 3.	26"	32"	39"
6. CONDITION 2. AND 4.	24"	30"	36"

ALL OTHER BARS SHALL BE LAPPED AS SHOWN ON THE CONSTRUCTION DRAWINGS.

CONCRETE MIXES:

PRECAST ELEMENTS:

THE FABRICATOR IS RESPONSIBLE FOR THE DESIGN AND INSTALLATION OF LIFT HOOKS FOR ALL PRECAST ELEMENTS. UNDER NO CIRCUMSTANCES WILL THE REBAR ELEMENTS SHOWN ON THE PLAN BE USED TO LIFT THE PRECAST ELEMENTS. FOR ADDITIONAL REQUIREMENTS, REFER TO THE "PRECAST DECK PANELS" SECTION OF ITEM 992.1.

PRECAST CONCRETE:
5000 PSI, $\frac{3}{4}$", 585 HP CEMENT CONCRETE: DECK PANELS

CAST-IN-PLACE CONCRETE:
5000 PSI, $\frac{3}{4}$", 585 HP CEMENT CONCRETE: SAFETY CURB, CLOSURE POUR, CONCRETE RETAINER, CONCRETE BACKWALL CAP, TIMBER SEATING FOOTING

MEMBRANE WATERPROOFING:

ALL MEMBRANE WATERPROOFING USED ON BRIDGE DECKS SHALL BE MEMBRANE WATERPROOFING FOR BRIDGE DECKS, SPRAY APPLIED.

ESTIMATED QUANTITIES
(NOT GUARANTEED)

ITEM DESCRIPTION	QUANTITY	UNITS
STRUCTURAL STEEL REPAIRS, BRIDGE NO. L-04-032 (C82)	4500	LB
PARTIAL DEMOLITION OF SUPERSTRUCTURE OF BRIDGE NO. L-04-032 (C82)	1	LS
SUPERPAVE BRIDGE SURFACE COURSE - 9.5 (SSC-B - 9.5)	65	TON
SUPERPAVE BRIDGE PROTECTIVE COURSE - 12.5 (SPC-B - 12.5)	105	TON
CONCRETE UNIT PAVER ON STRUCTURE - LARGE PAVERS	450	SY
CONCRETE UNIT PAVER ON STRUCTURE - SMALL PAVERS	375	SY
GRANITE PAVER BAND - ON STRUCTURE	200	SY
4 INCH ELECTRICAL CONDUIT TYPE NM - FIBERGLASS (UL)	3300	FT
SHEAR CONNECTORS	620	EA
STRUCTURAL STEEL-COATED STEEL BRIDGE NO. L-04-032 (C82)	102000	LB
STRUCTURAL STEEL INSPECTION, BRIDGE NO. L-04-032 (C82)	1	LS
CLEAN (FULL REMOVAL) AND PAINT STEEL BRIDGE NO. L-04-032 (C82)	1	LS
ALTERATION TO BRIDGE STRUCTURE NO. L-04-032 (C82)	1	LS
TEMPORARY PROTECTIVE SHIELDING, BRIDGE NO. L-04-032 (C82)	1	LS

SEISMIC DESIGN CRITERIA	
DESIGN RETURN PERIOD:	1000
DESIGN SPECTRA	
As	N/A
SDs	N/A
SD1	N/A
SITE CLASS	N/A
SEISMIC DESIGN CATEGORY (SDC)	N/A

HYDRAULIC DESIGN DATA	
DRAINAGE AREA (SQ. MILES)	4660
DESIGN FLOOD DISCHARGE (C.F.S.)	58,000
DESIGN FLOOD FREQUENCY (YEARS)	10
DESIGN FLOOD VELOCITY (F.P.S.)	N/A
DESIGN FLOOD ELEVATION (FEET, NAVD)	26.20
BASE (100-YEAR) FLOOD DATA	
BASE FLOOD DISCHARGE (C.F.S.)	111,000
BASE FLOOD ELEVATION (FEET, NAVD)	35.20
DESIGN AND CHECK SCOUR DATA	
DESIGN SCOUR FLOOD EVENT RETURN FREQUENCY (YEARS)	N/A
DESIGN FLOOD ABUTMENT SCOUR DEPTH (FEET)	N/A
DESIGN FLOOD PIER SCOUR DEPTH (FEET)	N/A
CHECK SCOUR FLOOD EVENT RETURN FREQUENCY (YEARS)	N/A
CHECK FLOOD ABUTMENT SCOUR DEPTH (FEET)	N/A
CHECK FLOOD PIER SCOUR DEPTH (FEET)	N/A
FLOOD OF RECORD	
DISCHARGE (C.F.S.)	N/A
FREQUENCY (IF KNOWN, YEARS)	N/A
MAXIMUM ELEVATION (FEET, NAVD)	N/A
DATE (MM/YYYY)	N/A
HISTORY OF ICE FLOES	N/A
EVIDENCE OF SCOUR AND EROSION	N/A

SEP. 7, 2024	ISSUED FOR CONSTRUCTION
DATE	DESCRIPTION

THIS SHEET IS APPROVED FOR CONSTRUCTION BY MASSDOT
AUTHORIZED SIGNATORY: STATE BRIDGE ENGINEER

USE ONLY PRINTS OF LATEST DATE

608930_BR2(L04032).DWG Plotted on 5-Sep-2024 9:56 PM
07-September-2024
Fourth Structural Submission (S4)

LAWRENCE
LMRC RAIL TRAIL OVER MERRIMACK RIVER

STATE	FED. AID PROJ. NO.	SHEET NO.	TOTAL SHEETS
MA	CMQ-003S(733)X	141	245
	PROJECT FILE NO.	608930	

DEMOLITION DETAILS

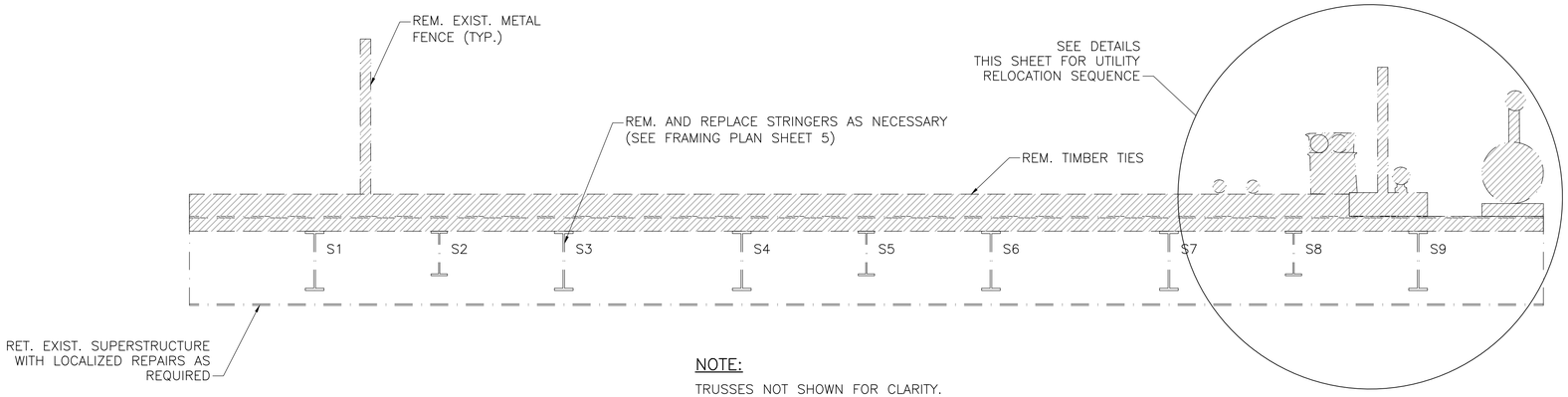

NOTE:

TRUSSES NOT SHOWN FOR CLARITY.

DEMOLITION SECTION

SCALE: $\frac{1}{2}$" = 1'–0"

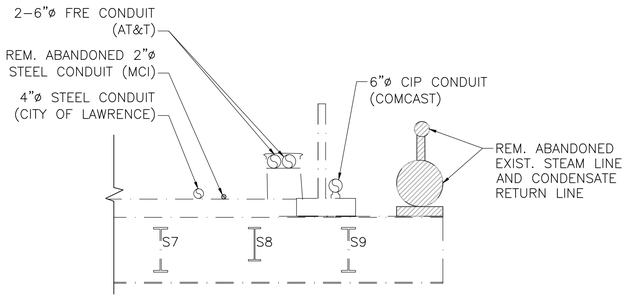

STAGE 1

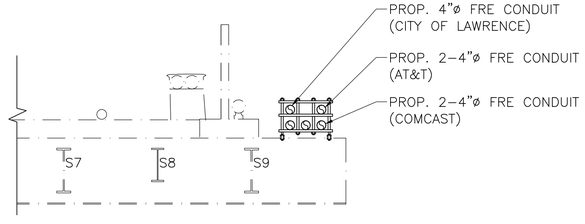

STAGE 2A

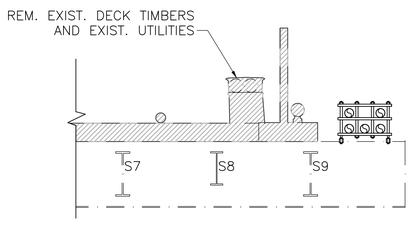

STAGE 2B

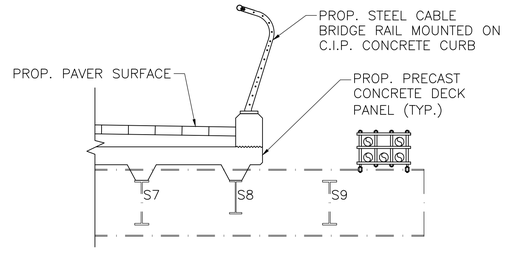

STAGE 3

UTILITY RELOCATION DETAILS

SCALE: $\frac{3}{8}$" = 1'–0"

STAGED CONSTRUCTION NOTES

STAGE 1: DEMOLISH EXISTING STEAM LINE AND CONDENSATE RETURN LINE.

STAGE 2A: RELOCATE EXISTING UTILITIES.

STAGE 2B: REMOVE EXISTING DECK TIMBERS AND EXISTING UTILITIES

STAGE 3: CONSTRUCT PROPOSED DECK AND RAILING.

DATE	DESCRIPTION
SEP. 7, 2024	ISSUED FOR CONSTRUCTION

THIS SHEET IS APPROVED FOR CONSTRUCTION BY MASSDOT
AUTHORIZED SIGNATORY: STATE BRIDGE ENGINEER

USE ONLY PRINTS OF LATEST DATE

608930_BR3(L04032).DWG Plotted on 5-Sep-2024 9:56 PM
Fourth Structural Submission (S4) 07-September-2024

LAWRENCE
LMRC RAIL TRAIL OVER MERRIMACK RIVER

STATE	FED. AID PROJ. NO.	SHEET NO.	TOTAL SHEETS
MA	CMQ-003S(733)X	142	245
PROJECT FILE NO.	608930		

PLAN AND ELEVATION

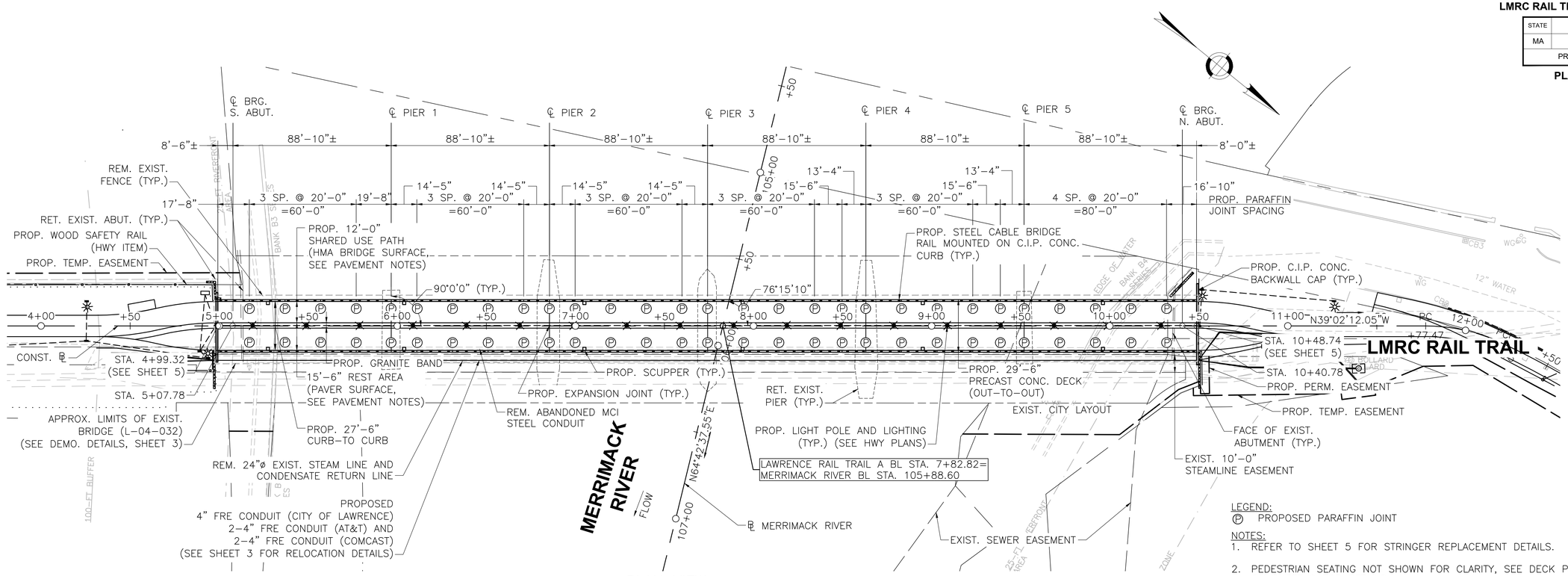

PLAN VIEW
SCALE: 1" = 30'

LEGEND:
Ⓟ PROPOSED PARAFFIN JOINT

NOTES:
1. REFER TO SHEET 5 FOR STRINGER REPLACEMENT DETAILS.
2. PEDESTRIAN SEATING NOT SHOWN FOR CLARITY, SEE DECK PLAN ON SHEET 6 FOR DETAILS.

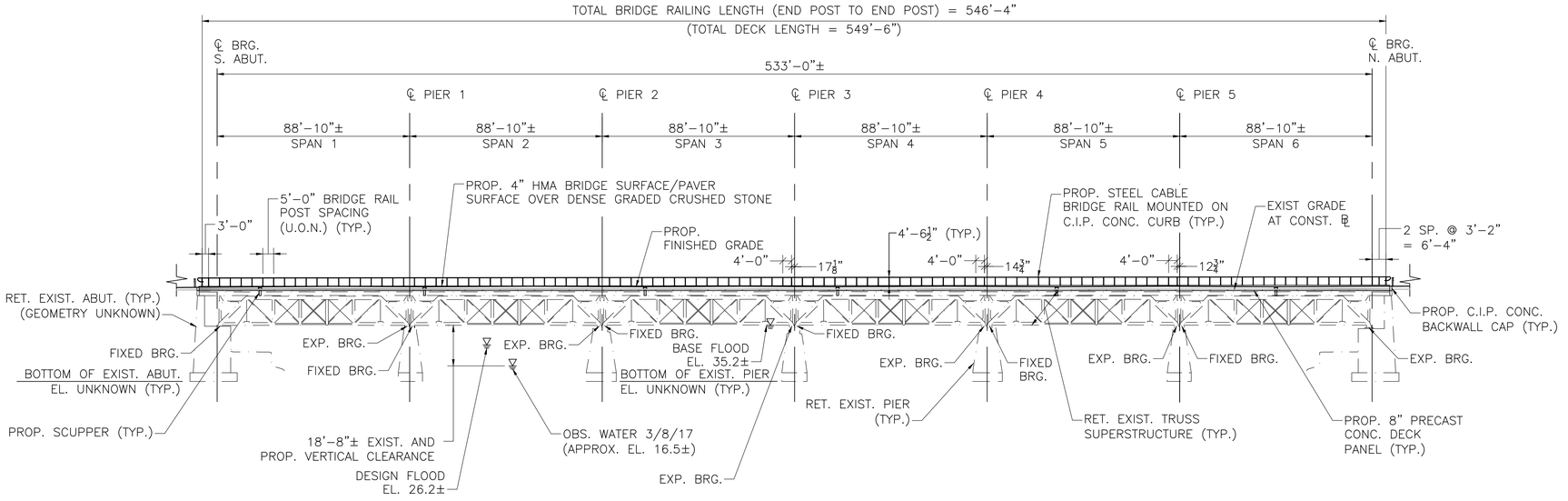

NOTES:
1. ALL EXISTING TRUSS BEARINGS WILL REMAIN IN PLACE AND UNDISTURBED.
2. GEOMETRY OF EXISTING SUBSTRUCTURE IS APPROXIMATE BASED OFF OF VISUAL INSPECTION AND AVAILABLE SURVEY.

ELEVATION VIEW (LOOKING WEST)
SCALE: 1" = 30'

SEP. 7, 2024	ISSUED FOR CONSTRUCTION
DATE	DESCRIPTION

THIS SHEET IS APPROVED FOR CONSTRUCTION BY MASSDOT
AUTHORIZED SIGNATORY: STATE BRIDGE ENGINEER
USE ONLY PRINTS OF LATEST DATE

608930_BR4(L04032).DWG Plotted on 5-Sep-2024 9:57 PM
Fourth Structural Submission (S4) 07-September-2024

LAWRENCE
LMRC RAIL TRAIL OVER MERRIMACK RIVER

STATE	FED. AID PROJ. NO.	SHEET NO.	TOTAL SHEETS
MA	CMQ-003S(733)X	143	245
	PROJECT FILE NO. 608930		

FRAMING PLAN

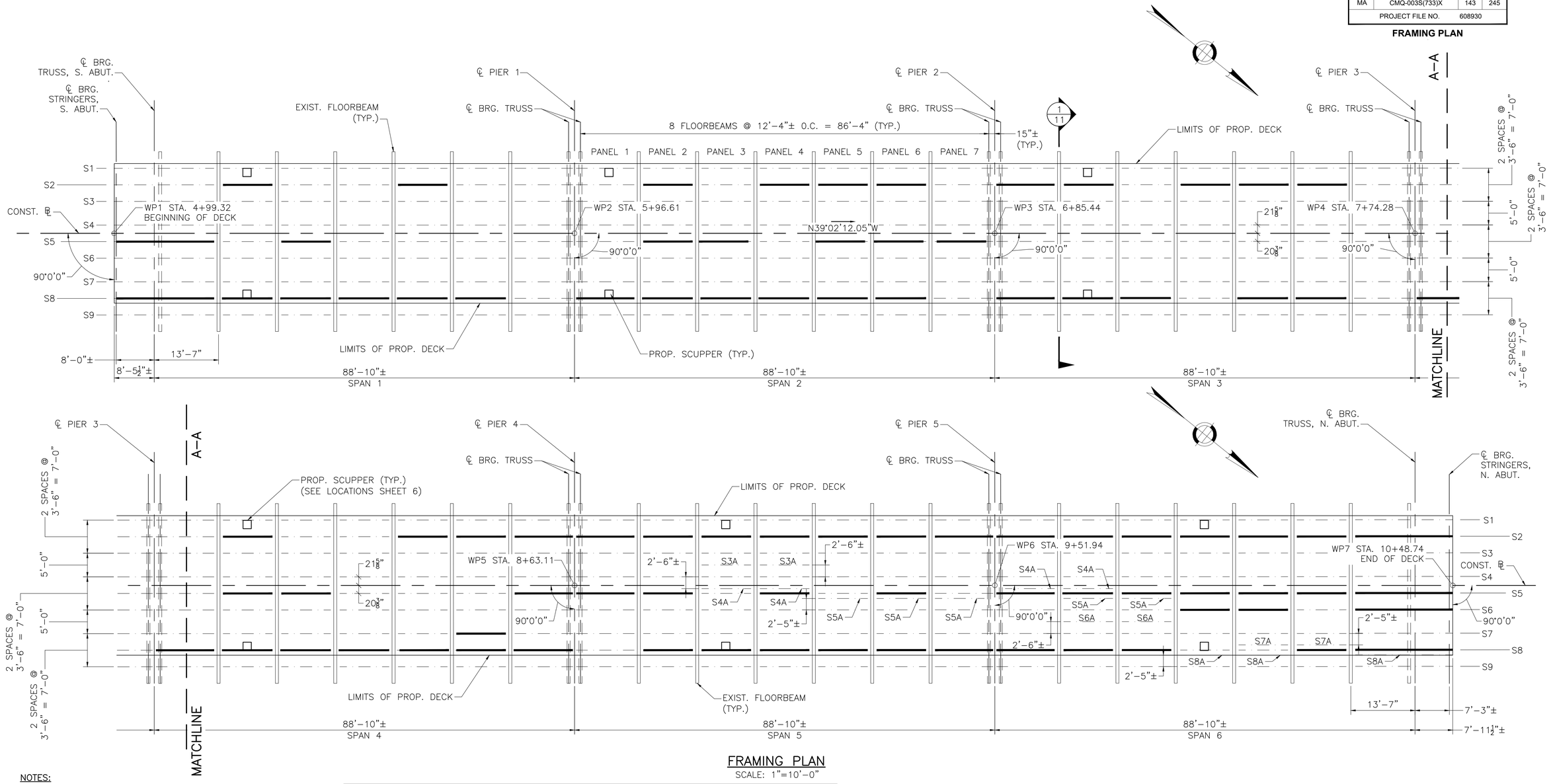

FRAMING PLAN

SCALE: 1"=10'–0"

NOTES:

1. STRINGER NOMENCLATURE AND REPLACEMENT LOCATIONS BASED ON THE WSP USA, INC. BRIDGE INSPECTION REPORT (DATED MAY 2020) AND FOLLOW UP INSPECTIONS BY WSP IN NOVEMBER 2023.
2. CONTRACTOR SHALL FIELD VERIFY REPLACEMENT LOCATIONS AND COORDINATE WITH THE ENGINEER TO DETERMINE ADDITIONAL STRINGER REPLACEMENTS AS NEEDED.
3. ALL STEEL SHALL CONFORM TO AASHTO M270 (ASTM A709) GRADE 50.
4. FOR STRINGER REPLACEMENT DETAILS, SEE SHEET 7.

SCHEDULE OF STRINGER REPLACEMENTS

STRINGER	LOCATION		STRINGER	LOCATION	
	SPAN NO.	PANEL(S)		SPAN NO.	PANEL(S)
S2	1	2,5	S6	6	4,5,7
	2	2,4,5,6			
	3	1,2,4,5,6	S7	4	6
	4	2,5,6,7			
	5	ALL			
	6	ALL	S8	1	1,2,3,4,5,6
S5	1	1,3		2	1,2,3,4,5,6
	2	2,3,5,6,7		3	1,2,3,5,6
	4	2,3,7		4	ALL
	5	1,2,4,6		5	2,3,4,5,6,7
	6	ALL		6	1,2,3,6,7

LEGEND:
EXISTING STRINGER
STRINGER REPLACEMENT

SUMMARY OF STRINGER REPLACEMENTS

STRINGER	REPLACEMENT SIZE	QUANTITY
S2	W14x74	29
S5	W14x74	21
S6	W18x71	3
S7	W18x71	1
S8	W14x74	35

SEP. 7, 2024	ISSUED FOR CONSTRUCTION
DATE	DESCRIPTION
THIS SHEET IS APPROVED FOR CONSTRUCTION BY MASSDOT AUTHORIZED SIGNATORY:	STATE BRIDGE ENGINEER
USE ONLY PRINTS OF LATEST DATE	

608930_BRS&T(L04032).DWG Plotted on 5-Sep-2024 9:57 PM
Fourth Structural Submission (S4) 07-September-2024

LAWRENCE
LMRC RAIL TRAIL OVER MERRIMACK RIVER

STATE	FED. AID PROJ. NO.	SHEET NO.	TOTAL SHEETS
MA	CMQ-003S(733)X	144	245
PROJECT FILE NO.	608930		

DECK PLAN

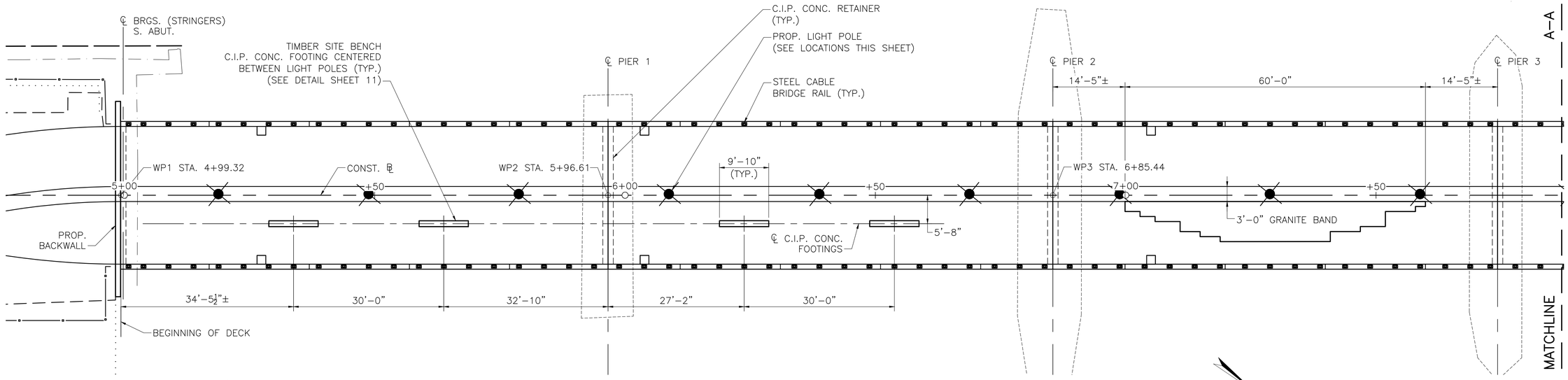

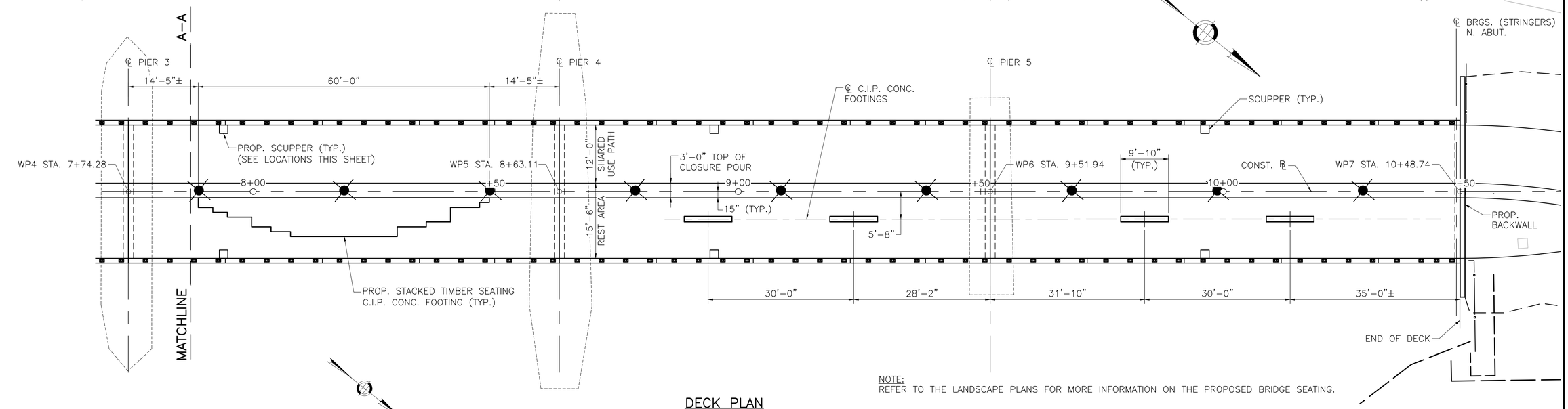

NOTE:
REFER TO THE LANDSCAPE PLANS FOR MORE INFORMATION ON THE PROPOSED BRIDGE SEATING.

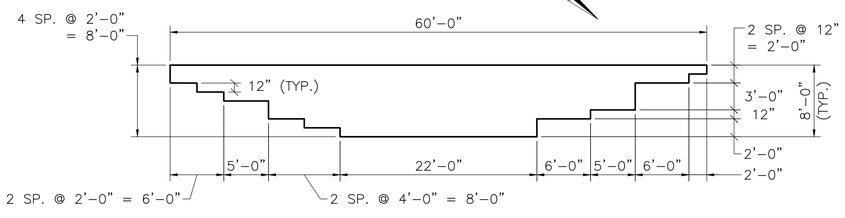

STACKED TIMBER SEATING FOOTING PLAN

SCALE: 1" = 8'

DECK PLAN

SCALE: 1" = 10'

LIGHT POLE LOCATIONS			
STATION	OFFSET	STATION	OFFSET
5+18.78	0.25' LT	7+88.81	0.25' LT
5+48.79	0.25' LT	8+18.78	0.25' LT
5+78.78	0.25' LT	8+48.82	0.25' LT
6+08.76	0.25' LT	8+78.78	0.25' LT
6+38.81	0.25' LT	9+08.82	0.25' LT
6+68.79	0.25' LT	9+38.80	0.25' LT
6+98.76	0.25' LT	9+68.78	0.25' LT
7+28.79	0.25' LT	9+98.78	0.25' LT
7+58.80	0.25' LT	10+28.79	0.25' LT

SCUPPER LOCATIONS	
STATION	OFFSET TO FRONT FACE
5+27.39	12.0 LT & RT
6+03.90	12.0 LT & RT
7+05.07	12.0 LT & RT
7+93.91	12.0 LT & RT
8+95.07	12.0 LT & RT
9+96.23	12.0 LT & RT

DATE	DESCRIPTION
SEP. 7, 2024	ISSUED FOR CONSTRUCTION

THIS SHEET IS APPROVED FOR CONSTRUCTION BY MASSDOT
AUTHORIZED SIGNATORY: STATE BRIDGE ENGINEER
USE ONLY PRINTS OF LATEST DATE

608930_BR6(L04032).DWG Plotted on 5-Sep-2024 9:58 PM
Fourth Structural Submission (S4) 07-September-2024

STATE	FED. AID PROJ. NO.	SHEET NO.	TOTAL SHEETS
MA	CMQ-003S(733)X	145	245
PROJECT FILE NO.	608930		

STRINGER REPLACEMENT DETAILS

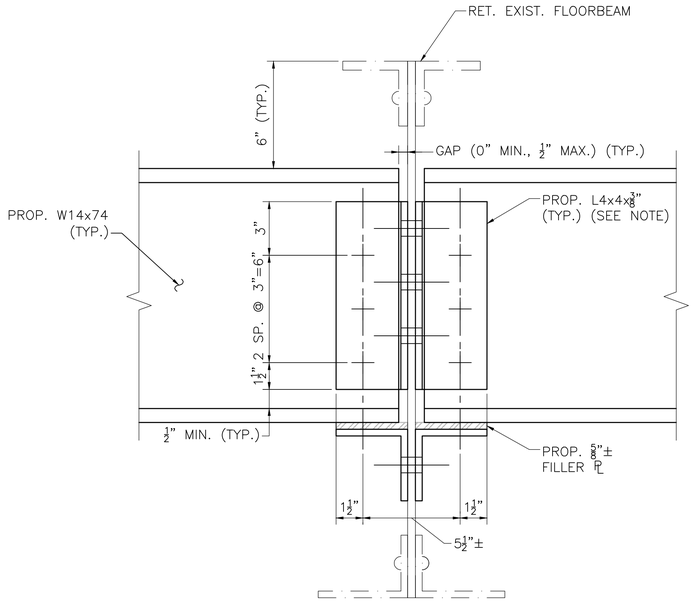

ELEVATION

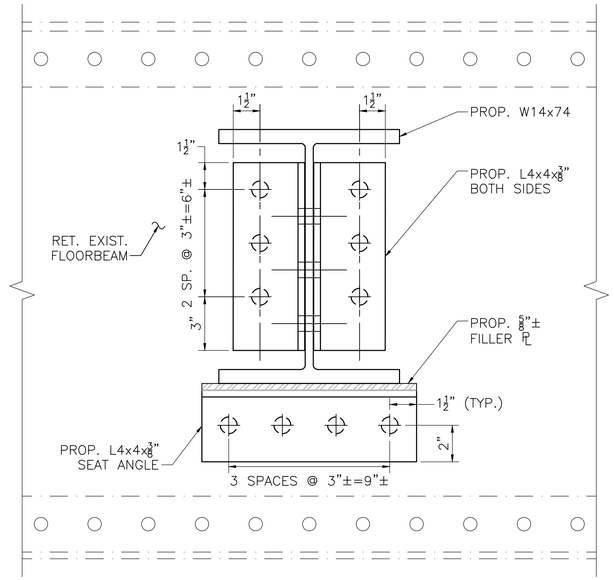

SECTION

NOTE:
DETAIL SHOWS TWO ADJACENT STRINGER REPLACEMENTS. EXISTING CONNECTION PLATES SHALL BE REPLACED AS SHOWN FOR ANY ADJACENT EXISTING STRINGER NOT SCHEDULE FOR REPLACEMENT. SEAT ANGLE NEED NOT BE REPLACED AT EXISTING STRINGERS UNLESS OTHERWISE DETERMINED BY THE ENGINEER.

TYPICAL STRINGER REPLACEMENT AT S2, S5 & S8

SCALE: 3" = 1'-0"

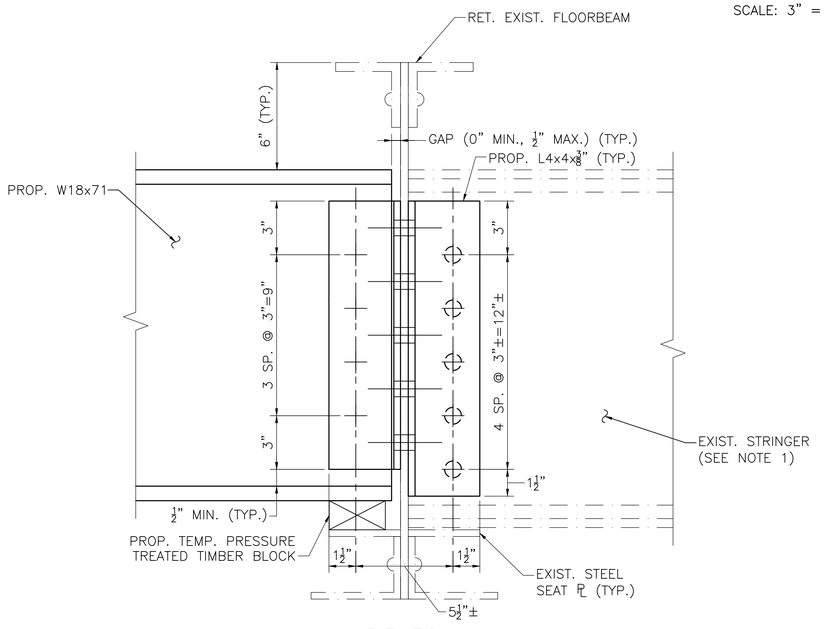

ELEVATION

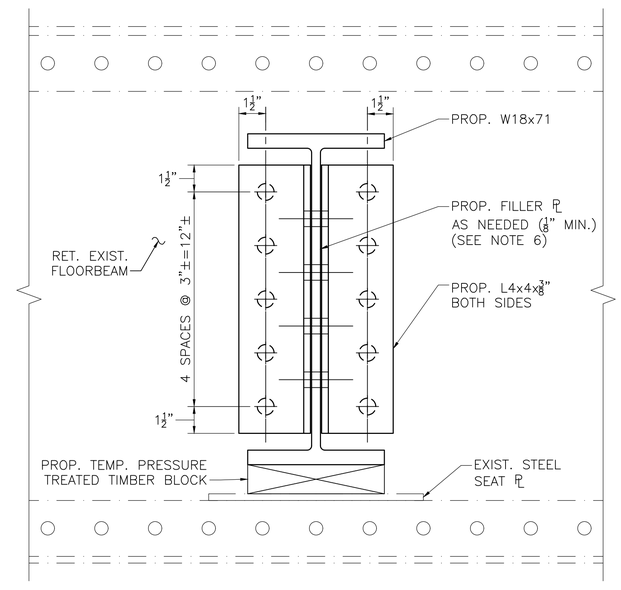

SECTION

STRINGER S6 & S7 REPLACEMENT

SCALE: 3" = 1'-0"

STRINGER REPLACEMENT CONNECTION DETAILS

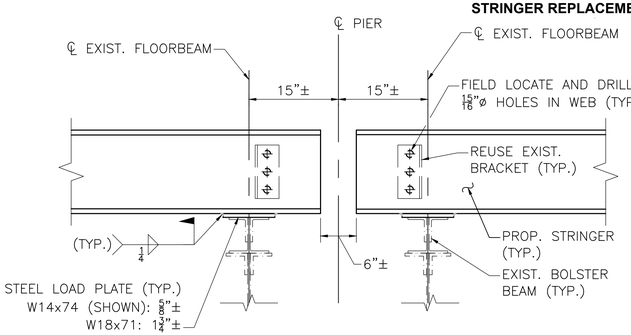

NOTE:
CONTRACTOR SHALL REMOVE AND RESET EXISTING DIAPHRAGMS WITH 7/8"ø A325 BOLTS.

TYPICAL STRINGER REPLACEMENT AT PIER

SCALE: 1" = 1'-0"

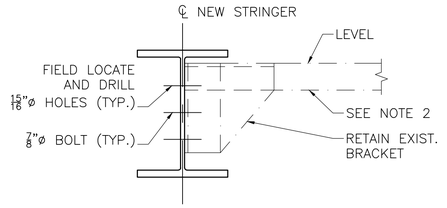

NOTES:
1. CONTRACTOR TO PROVIDE TEMPORARY DIAPHRAGM SUPPORT AS REQUIRED.
2. EXISTING DIAPHRAGM AND CONNECTION PLATES TO REMAIN. CONTRACTOR SHALL MAKE SURE NOT TO DAMAGE DURING REMOVAL OF EXISTING STRINGER.
3. FLOORBEAMS NOT SHOWN FOR CLARITY.

STRINGER DIAPHRAGM CONNECTION DETAIL AT PIER

NOT TO SCALE

STRINGER REPLACEMENT NOTES

1. ANY ADJACENT STRINGERS NOT SCHEDULED FOR REPLACEMENT SHALL BE TEMPORARILY SUPPORTED DURING CONSTRUCTION.
2. CONTRACTOR SHALL VERIFY THAT EXISTING ADJACENT STRINGERS DO NOT BECOME MISALIGNED DURING STRINGER REPLACEMENT.
3. FASTENER DIMENSIONS SHOWN ARE APPROXIMATE AND NOT GUARANTEED. CONTRACTOR SHALL FIELD VERIFY LOCATION, SPACING AND SIZE OF ALL EXISTING BOLT HOLES THAT ARE DESIGNATED FOR REUSE.
4. FOR STRINGER REPLACEMENT LOCATIONS, SEE SHEET 5.
5. TIMBER BLOCKS SHALL BE REMOVED AFTER INSTALLATION OF STRINGERS.
6. FILLER PLATE THICKNESS OF 1/16" OR LESS ARE NOT REQUIRED. FILLER PLATES SHALL CONFORM TO AASHTO M270 (ASTM A709) GRADE 50.
7. LOAD PLATE THICKNESSES SHALL BE DETERMINED AFTER FIELD MEASUREMENTS HAVE BEEN COMPLETED AND SIZED TO ACHIEVE A 6" DISTANCE FROM THE TOP SURFACE OF THE FLOORBEAM TOP FLANGE TO THE TOP SURFACE OF THE PROPOSED STRINGER TOP FLANGE. IF FIELD MEASUREMENTS INDICATE A LOAD PLATE THICKNESS OF LESS THAN 3/8", THE ENGINEER SHALL BE CONTACTED.

LEGEND

- PROP. 7/8"ø A325 BOLT IN 15/16"ø PROP. HOLE.
- PROP. 7/8"ø A325 BOLT IN 15/16"ø FIELD LOCATED HOLE
- EXIST. RIVET TO REMAIN

SEP. 7, 2024	ISSUED FOR CONSTRUCTION
DATE	DESCRIPTION

THIS SHEET IS APPROVED FOR CONSTRUCTION BY MASSDOT
AUTHORIZED SIGNATORY: STATE BRIDGE ENGINEER
USE ONLY PRINTS OF LATEST DATE

608930_BRS&T(L04032).DWG Plotted on 5-Sep-2024 9:58 PM
07-September-2024 Fourth Structural Submission (S4)

LAWRENCE
LMRC RAIL TRAIL OVER MERRIMACK RIVER

STATE	FED. AID PROJ. NO.	SHEET NO.	TOTAL SHEETS
MA	CMQ-003S(733)X	146	245
PROJECT FILE NO.	608930		

DECK DETAILS (1 OF 3)

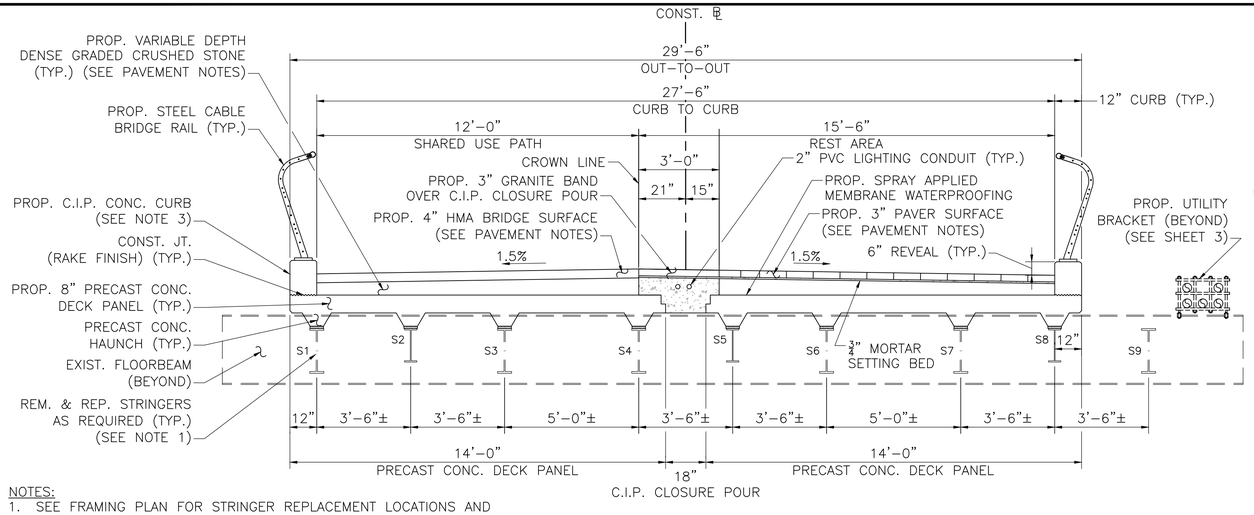

NOTES:
1. SEE FRAMING PLAN FOR STRINGER REPLACEMENT LOCATIONS AND SHEET 7 FOR STRINGER REPLACEMENT DETAILS. INTERMEDIATE STRINGERS NOT SHOWN FOR CLARITY.
2. SEE SECTION 1, SHEET 11 FOR RELOCATED UTILITY DETAILS.
3. C.I.P. CONCRETE SAFETY CURB SHALL BE 5000 PSI, ¾", 585 HP CEMENT CONCRETE.

TYPICAL SECTION
SCALE: ⅜" = 1'–0"

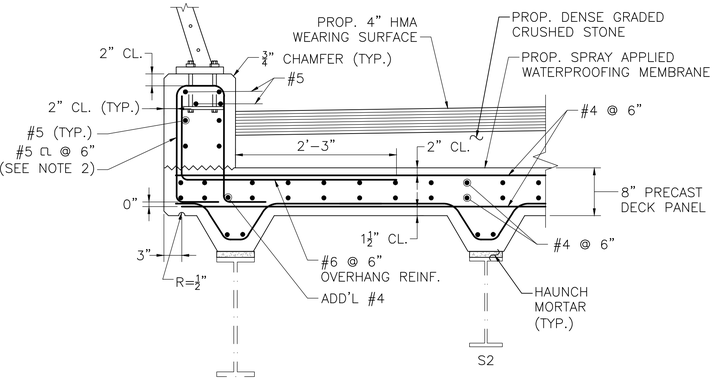

NOTES:
1. DECK PANEL LONGITUDINAL REINFORCEMENT NOT SHOWN FOR CLARITY.
2. ALL OVERHANG REINFORCEMENT SHALL BE CAST INTO THE DECK PANELS. THE USE OF DOWEL BAR SPLICERS IS NOT PERMITTED.
3. FABRICATOR SHALL DETAIL PLACEMENT OF OVERHANG REINFORCEMENT PER PANEL SUCH THAT REINFORCEMENT WILL NOT INTERFERE WITH ANTICIPATED RAIL POST LOCATIONS.

SECTION THRU SAFETY CURB
SCALE: 1" = 1'–0"

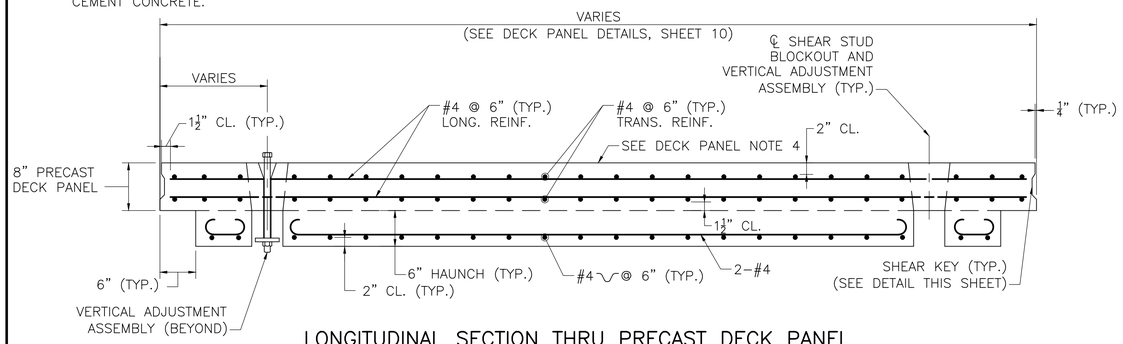

LONGITUDINAL SECTION THRU PRECAST DECK PANEL
SCALE: 1" = 1'–0"

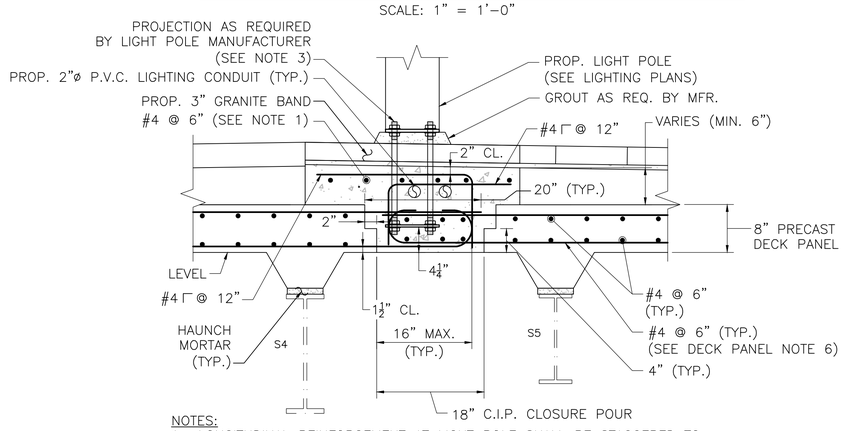

NOTES:
1. LONGITUDINAL REINFORCEMENT AT LIGHT POLE SHALL BE STAGGERED TO ALLOW ROOM FOR ANCHOR BOLTS AND CONDUIT.
2. HAUNCH REINFORCEMENT NOT SHOWN FOR CLARITY.
3. SIZE, NUMBER, AND BOLT LOCATIONS FROM LIGHT POLE MANUFACTURER.
4. CLOSURE POUR SHALL BE 5000 PSI, ¾", HP CEMENT CONCRETE.

CAST–IN–PLACE CLOSURE POUR DETAILS
SCALE: 1" = 1'–0"

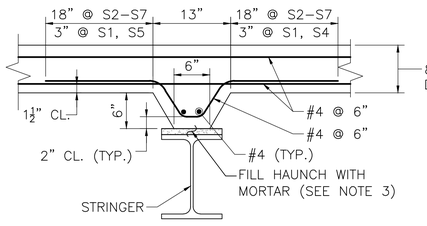

NOTES:
1. LONGITUDINAL REINFORCEMENT NOT SHOWN FOR CLARITY.
2. HAUNCH DETAIL SHOWN AT INTERIOR STRINGERS. SEE SECTION THRU SAFETY CURB DETAIL FOR HAUNCH AT EXTERIOR STRINGERS.
3. MORTAR THICKNESS WILL VARY DEPENDING ON EXISTING CONDITIONS AND ELEVATIONS OF STRINGERS. IF FIELD CONDITIONS INDICATE MORTAR THICKNESSES WILL EXCEED 3", THE ENGINEER SHALL BE CONTACTED PRIOR TO PLACEMENT OF MORTAR. MORTAR SHALL BE PLACED OVER THE FULL WIDTH OF THE EXISTING AND PROPOSED STRINGER TOP FLANGE.

PRECAST HAUNCH DETAIL
SCALE: 1" = 1'–0"

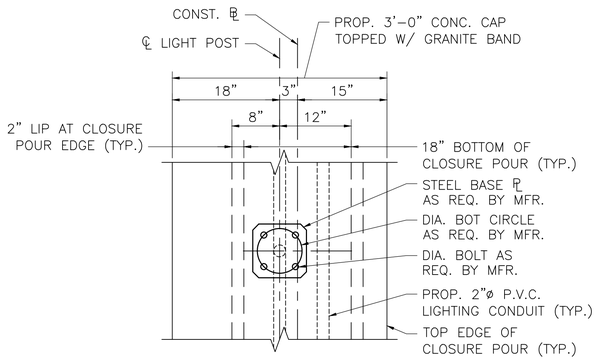

PLAN – DETAILS AT LIGHT POLE
SCALE: 1" = 1'–0"

PAVEMENT NOTES:

HMA BRIDGE SURFACE
SURFACE: 1½" SUPERPAVE BRIDGE SURFACE COURSE (SSC–B–9.5) OVER
2½" SUPERPAVE BRIDGE PROTECTIVE COURSE (SPC–B–12.5) OVER
BASE: VARIABLE DEPTH DENSE GRADED CRUSHED STONE (VARIES BETWEEN APPROX. 3½"–8½")

PAVER SURFACE
SURFACE: 3" CONCRETE PAVERS OVER
¾" MORTAR SETTING BED
BASE: VARIABLE DEPTH DENSE GRADED CRUSHED STONE (VARIES BETWEEN APPROX. 3½"–8½")

1. MORTAR SETTING BED ONLY SHOWN ON BRIDGE SECTIONS FOR CLARITY. REFER TO THE LANDSCAPE PLANS FOR ADDITIONAL INFORMATION.
2. CONTRACTOR SHALL EXERCISE CAUTION WHEN PLACING DENSE GRADED CRUSH STONE TO ENSURE MEMBRANE WATERPROOFING DOES NOT PUNCTURE.

PRECAST DECK PANEL NOTES:

1. PRECAST CONCRETE DECK PANELS SHALL BE 5000 PSI, ¾ IN, 585 HP CEMENT CONCRETE. SUBSTITUTIONS OF OTHER MIX DESIGNS WILL NOT BE ALLOWED.
2. LONGITUDINAL REINFORCEMENT SHALL BE PLACED PARALLEL TO THE ℄ OF CONSTRUCTION. TRANSVERSE (PRIMARY) REINFORCEMENT SHALL BE PLACED PERPENDICULAR TO THE ℄ OF CONSTRUCTION.
3. ALL REINFORCEMENT AND SUPPORT DEVICES SHALL BE EPOXY COATED.
4. THE FINISHED SURFACE OF BRIDGE DECK SHALL BE SMOOTH AND WITHOUT ANY PROJECTIONS THAT COULD PUNCTURE THE MEMBRANE WATERPROOFING OR DEPRESSIONS THAT COULD RETAIN WATER.
5. THE EDGE SURFACE OF THE PRECAST CONCRETE DECK PANELS SHALL BE BLAST CLEANED AND WETTED WITH CLEAN WATER, IMMEDIATELY PRIOR TO PLACING CLOSURE POUR CONCRETE.
6. THE FABRICATOR SHALL STAGGER REINFORCING BARS EXTENDING FROM THE PRECAST DECK PANELS INTO THE CLOSURE POUR JOINT TO AVOID REINFORCING BAR CONFLICTS WITHIN THE CLOSURE POUR.
7. CLOSURE POUR CONCRETE SHALL BE 5000 PSI, ¾" IN., 585 HP CONCRETE.

DATE	DESCRIPTION
SEP. 7, 2024	ISSUED FOR CONSTRUCTION

THIS SHEET IS APPROVED FOR CONSTRUCTION BY MASSDOT AUTHORIZED SIGNATORY: STATE BRIDGE ENGINEER

USE ONLY PRINTS OF LATEST DATE

LAWRENCE
LMRC RAIL TRAIL OVER MERRIMACK RIVER

STATE	FED. AID PROJ. NO.	SHEET NO.	TOTAL SHEETS
MA	CMQ-003S(733)X	147	245
	PROJECT FILE NO. 608930		

DECK DETAILS (2 OF 3)

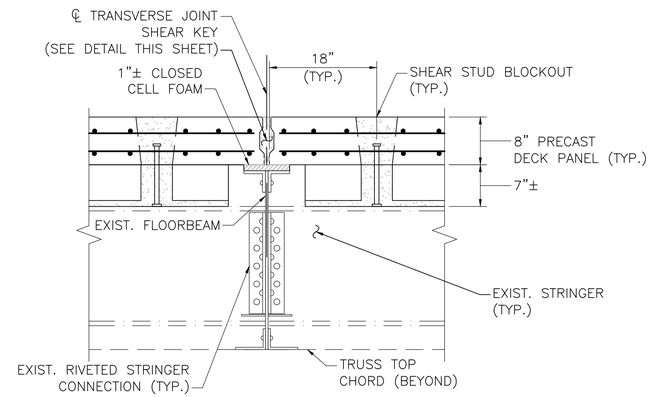

LONGITUDINAL SECTION AT FLOORBEAM
SCALE: 1" = 1'–0"

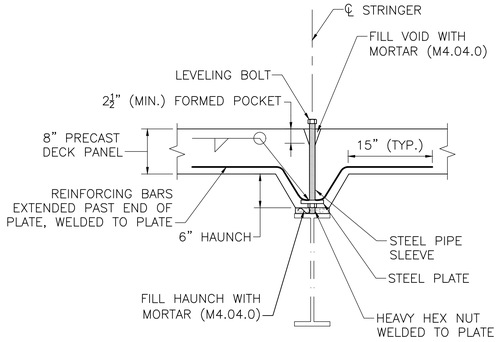

NOTES:
1. VERTICAL ADJUSTMENT ASSEMBLY SHOWN IS SUGGESTED AND SHALL BE DESIGNED BY THE CONTRACTOR. THE NUMBER OF DEVICES SHALL ENSURE PROPER DEAD LOAD DISTRIBUTION TO THE STRINGERS.
2. VERTICAL ADJUSTMENT ASSEMBLIES CONSISTING OF ADJUSTMENT BOLTS SHALL BE NON–COATED AND THE REINFORCING STEEL SHALL CONFORM TO ASTM A706 FOR WELDING.
3. PANEL REINFORCEMENT NOT SHOWN FOR CLARITY.

VERTICAL ADJUSTMENT ASSEMBLY
SCALE: 1" = 1'–0"

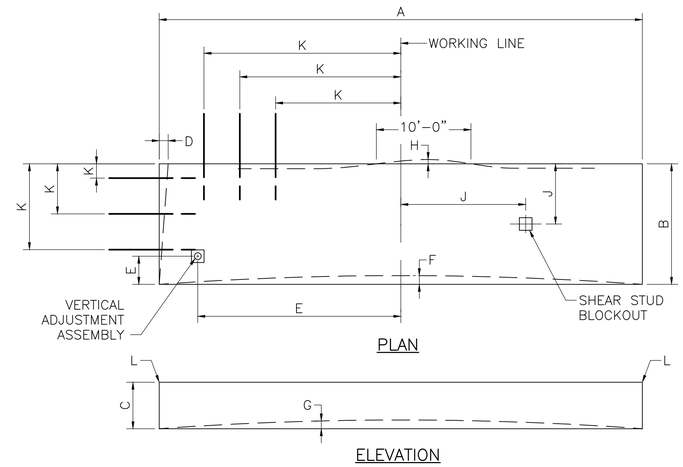

PLAN

ELEVATION

PRECAST DECK PANEL TOLERANCES
NOT TO SCALE

DECK PANEL FABRICATION TOLERANCES		
TOLERANCE	DESCRIPTION	TOLERANCE
A	LENGTH (OVERALL)	±⅜"
B	WIDTH (OVERALL)	±¼"
C	DEPTH (OVERALL)	±¼"
D	VARIATION FROM SPECIFIED PLAN END SQUARENESS OR SKEW	±¼"
E	LOCATION OF VERTICAL ADJUSTMENT ASSEMBLY	±1"
F	SWEEP OVER MEMBER LENGTH	±¼"
G	CAMBER VARIATION FROM DESIGN CAMBER	±¼"
H	LOCAL SMOOTHNESS OF ANY SURFACE	±¼" IN 10'
J	LOCATION OF BLOCKOUT FOR SHEAR CONNECTORS	±½"
K	LOCATION OF REINFORCEMENT (MEASURED FROM WORKING LINE)	±¼"
DECK PANEL ELEVATION ERECTION TOLERANCES		
L	DEVIATION FROM SPECIFIED ELEVATION	±⅛"

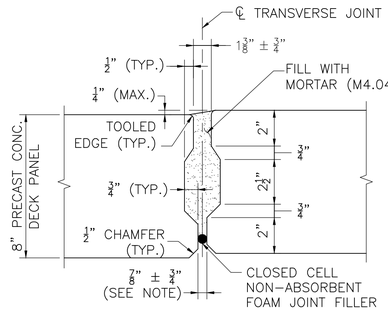

NOTE:
VARIATION IN JOINT WIDTH TO ACCOMMODATE FABRICATION TOLERANCES WHEN ERECTING PANELS.

SHEAR KEY DETAILS
SCALE: 3" = 1'–0"

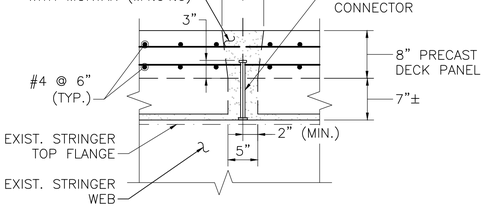

LONGITUDINAL SECTION

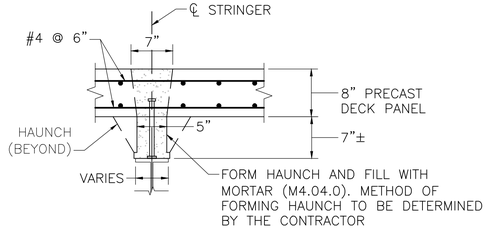

TRANSVERSE SECTION

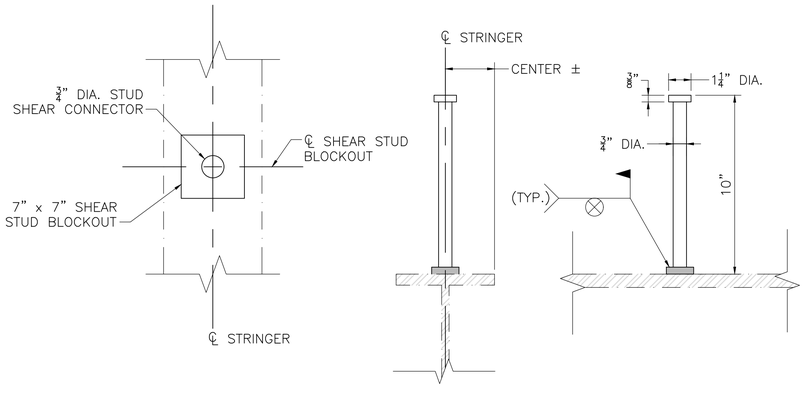

SHEAR STUD BLOCKOUT DETAILS
SCALE: 1" = 1'–0"

SHEAR CONNECTION DETAILS
NOT TO SCALE

SEP. 7, 2024	ISSUED FOR CONSTRUCTION
DATE	DESCRIPTION
THIS SHEET IS APPROVED FOR CONSTRUCTION BY MASSDOT AUTHORIZED SIGNATORY:	STATE BRIDGE ENGINEER
USE ONLY PRINTS OF LATEST DATE	

608930_BRB-10(L04032).DWG Plotted on 5-Sep-2024 9:58 PM
07-September-2024 Fourth Structural Submission (S4)

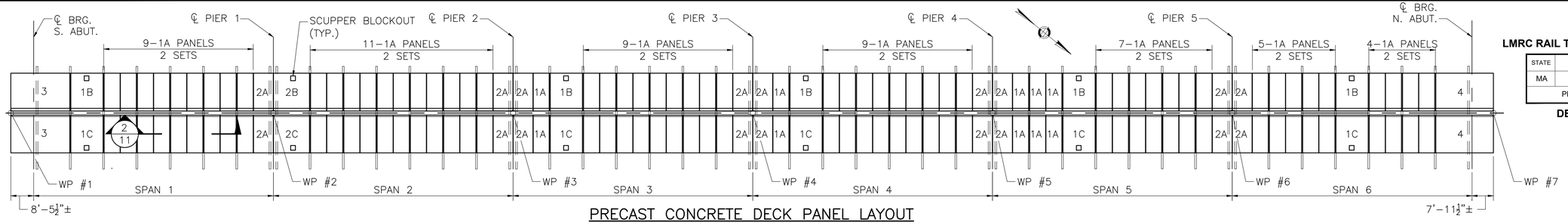

PRECAST CONCRETE DECK PANEL LAYOUT

NOT TO SCALE

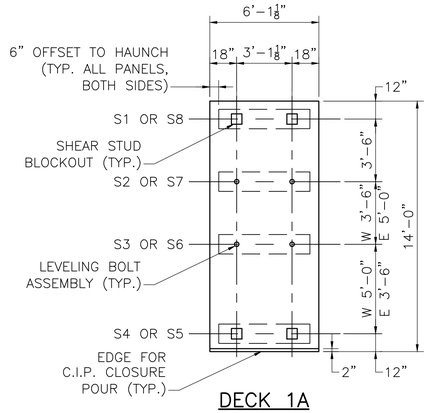

DECK 1A

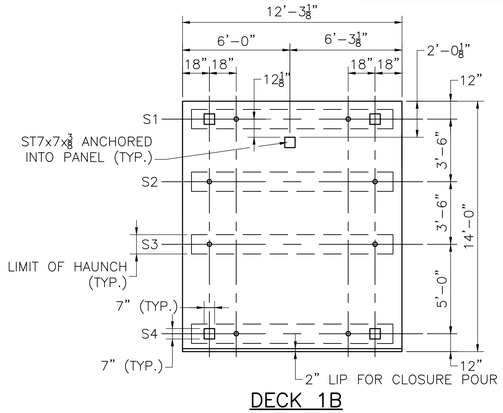

DECK 1B

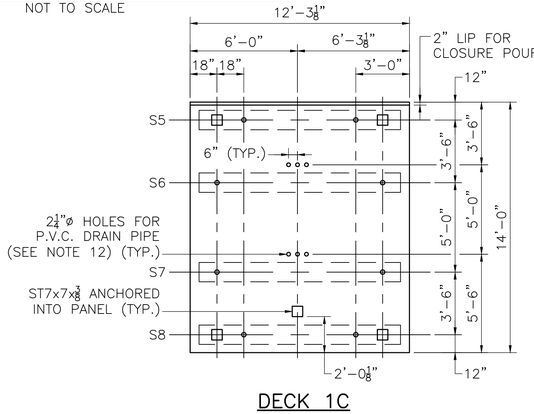

DECK 1C

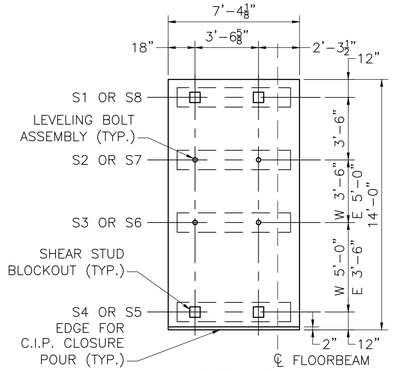

DECK 2A

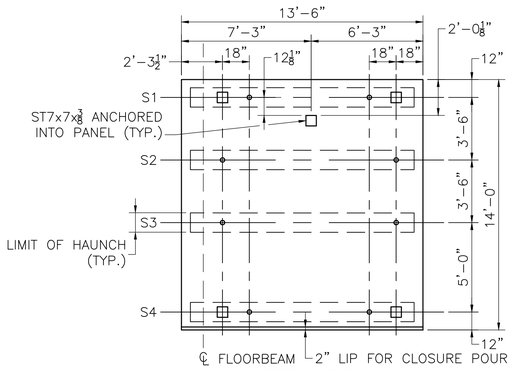

DECK 2B

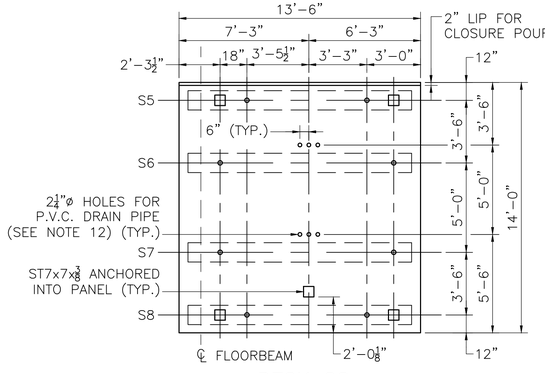

DECK 2C

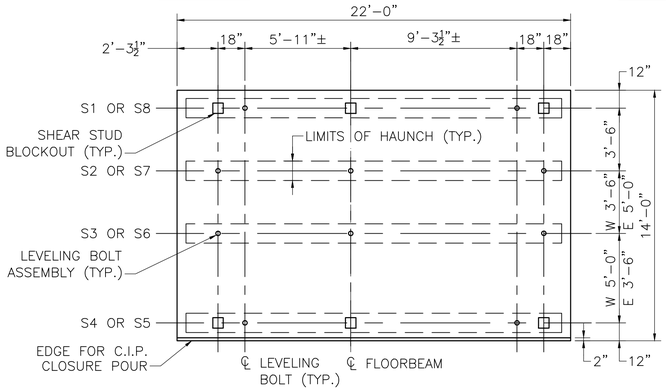

DECK 3

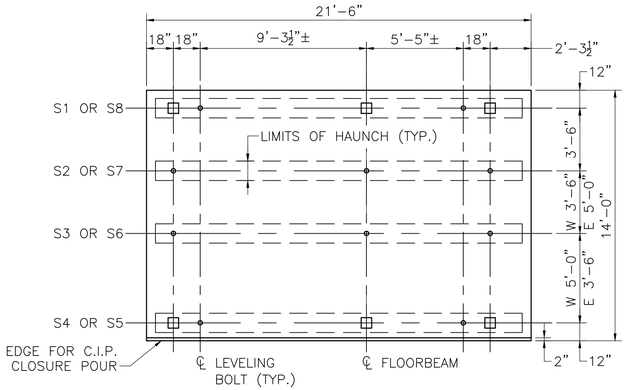

DECK 4

PRECAST DECK PANEL DETAILS

SCALE: ¼" = 1'–0"

NOTES:

1. PANEL LENGTHS ARE MEASURED FROM THE BOTTOM EDGE OF THE SHEAR KEY.
2. FOR PANEL FABRICATION TOLERANCES SEE SHEET 9.
3. REBAR SPACING SHOWN ON DETAILS REPRESENTS AVERAGE SPACING REQUIRED IN THE PANELS. BARS MAY BE BUNDLED AT LEVELING DEVICE LOCATIONS OR SHEAR CONNECTOR BLOCKOUTS.
4. ALL PANEL EDGES IN CLOSURE POURS SHALL HAVE AN EXPOSED AGGREGATE FINISH.
5. THE FINISHED TOP SURFACE OF PANELS SHALL BE PREPARED IN ACCORDANCE WITH THE REQUIREMENTS OF THE MEMBRANE WATERPROOFING APPLICATION.
6. FABRICATOR SHALL DESIGN THE LIFTING DEVICES AND SHALL DETERMINE THEIR REQUIRED NUMBER AND LOCATIONS, WHICH SHALL BE PROVIDED ON THE SHOP DRAWINGS. DESIGN CALCULATIONS OF THE LIFTING DEVICES WITH ALL SUPPORTING DESIGN INFORMATION (CHARTS, TABLES, ETC.) SHALL BE SUBMITTED TO THE ENGINEER FOR APPROVAL.
7. VERTICAL ADJUSTMENT ASSEMBLIES TO BE DESIGNED BY THE CONTRACTOR TO PROVIDE TRIBUTARY DEAD LOAD DISTRIBUTION TO THE BEAMS. A MINIMUM OF TWO ASSEMBLIES AT EACH BEAM'S CENTERLINE SHALL BE PROVIDED.
8. DECK PANELS SHALL BE CONNECTED BY SHEAR KEYS AT INTERIOR TRANSVERSE JOINTS AND BY EXPANSION JOINTS AT PIERS AND ABUTMENTS.
9. REINFORCEMENT MUST BE STAGGERED IN THE CLOSURE POUR JOINT. EXACT OFFSETS FROM PANEL FACES MUST BE PROVIDED IN THE SHOP DRAWINGS TO ENSURE REINFORCEMENT DOES NOT CONFLICT BETWEEN PANELS WITHIN THE CLOSURE POUR.
10. FABRICATOR SHALL DETAIL ALL REINFORCING BARS EXTENDING OUT OF THE SLAB INTO THE SAFETY CURB AND RETAINER. REINFORCEMENT FOR C.I.P. CONCRETE RETAINERS SHALL BE INCLUDED IN PANELS 2A, 2B, 2C, 3 AND 4.
11. STRINGER SPACING EAST AND WEST OF THE CLOSURE POUR VARY. FABRICATOR SHALL NOTE THE HAUNCH LOCATIONS OF PANELS 1A, 2A, 3 AND 4 DEPENDING ON WHETHER THE PANEL IS EAST OR WEST OF THE CLOSURE POUR.
12. HOLE DIAMETER FOR P.V.C DRAIN PIPE SHALL BE SIZED TO MATCH THE OUTER DIAMETER OF THE P.V.C. COUPLING.

CONSTRUCTION SEQUENCE NOTES:

1. CONTRACTOR SHALL ENSURE STABILITY OF ALL PANELS THROUGHOUT THE CONSTRUCTION.
2. USE FASCIA AS WORKING LINE FOR INSTALLATION OF PRECAST CONCRETE DECK PANELS WITH THE ERECTION TOLERANCE OF ±¼".
3. PLACE PANELS. JOINT WIDTH WILL VARY TO ACCOUNT FOR FABRICATION AND ERECTION TOLERANCES TO MAINTAIN THE REQUIRED OVERALL BRIDGE GEOMETRY.
4. SET PANELS TO GRADE BY USING THE VERTICAL ADJUSTMENT ASSEMBLIES TO ACHIEVE THE NECESSARY MORTAR PAD THICKNESS AND EQUAL LOAD DISTRIBUTION TO ALL STRINGERS.
5. INSTALL REINFORCEMENT IN CLOSURE POURS.
6. INSTALL SHEAR STUDS IN BLOCKOUTS (MAY BE DONE AT ANY TIME AFTER PANELS HAVE BEEN VERTICALLY LEVELED).
7. FORM STRINGER HAUNCHES. METHOD OF FORMING TO BE DETERMINED BY THE CONTRACTOR. MEASURE HAUNCH THICKNESS TO ENSURE 3" MORTAR PAD LIMIT IS NOT EXCEEDED. PLACE MORTAR.
8. FILL TRANSVERSE KEYS.
9. PLACE CLOSURE POUR CONCRETE.
10. REMOVE LEVELING DEVICE EXTENDING ABOVE TOP OF CONCRETE AND GROUT RECESSES WITH NON–SHRINK GROUT.
11. PANELS SHALL NOT BE SUBJECTED TO LIVE LOAD OR STOCKPILING OF DEAD LOADS UNTIL ALL TRANSVERSE JOINTS HAVE BEEN FILLED AND THE CLOSURE POUR CONCRETE HAS REACHED A COMPRESSIVE STRENGTH OF 2500 PSI.

PRECAST DECK PANEL SCHEDULE		
DECK	SIZE (L x W)	QUANTITY
1A	6'–1⅛" x 14'–0"	118
1B	12'–3⅛" x 14'–0"	5
1C	12'–3⅛" x 14'–0"	5
2A	7'–4⅛" x 14'–0"	18
2B	13'–6" x 14'–0"	1
2C	13'–6" x 14'–0"	1
3	22'–0" x 14'–0"	2
4	21'–6" x 14'–0"	2

LAWRENCE
LMRC RAIL TRAIL OVER MERRIMACK RIVER

STATE	FED. AID PROJ. NO.	SHEET NO.	TOTAL SHEETS
MA	CMQ-003S(733)X	148	245
PROJECT FILE NO.	608930		

DECK DETAILS (3 OF 3)

SEP. 7, 2024	ISSUED FOR CONSTRUCTION
DATE	DESCRIPTION
THIS SHEET IS APPROVED FOR CONSTRUCTION BY MASSDOT AUTHORIZED SIGNATORY:	STATE BRIDGE ENGINEER
USE ONLY PRINTS OF LATEST DATE	

608930_BRB-10(L04032).DWG Plotted on 5-Sep-2024 9:58 PM
Fourth Structural Submission (S4) 07-September-2024

LAWRENCE
LMRC RAIL TRAIL OVER MERRIMACK RIVER

STATE	FED. AID PROJ. NO.	SHEET NO.	TOTAL SHEETS
MA	CMQ-003S(733)X	149	245
	PROJECT FILE NO. 608930		

MISCELLANEOUS DETAILS

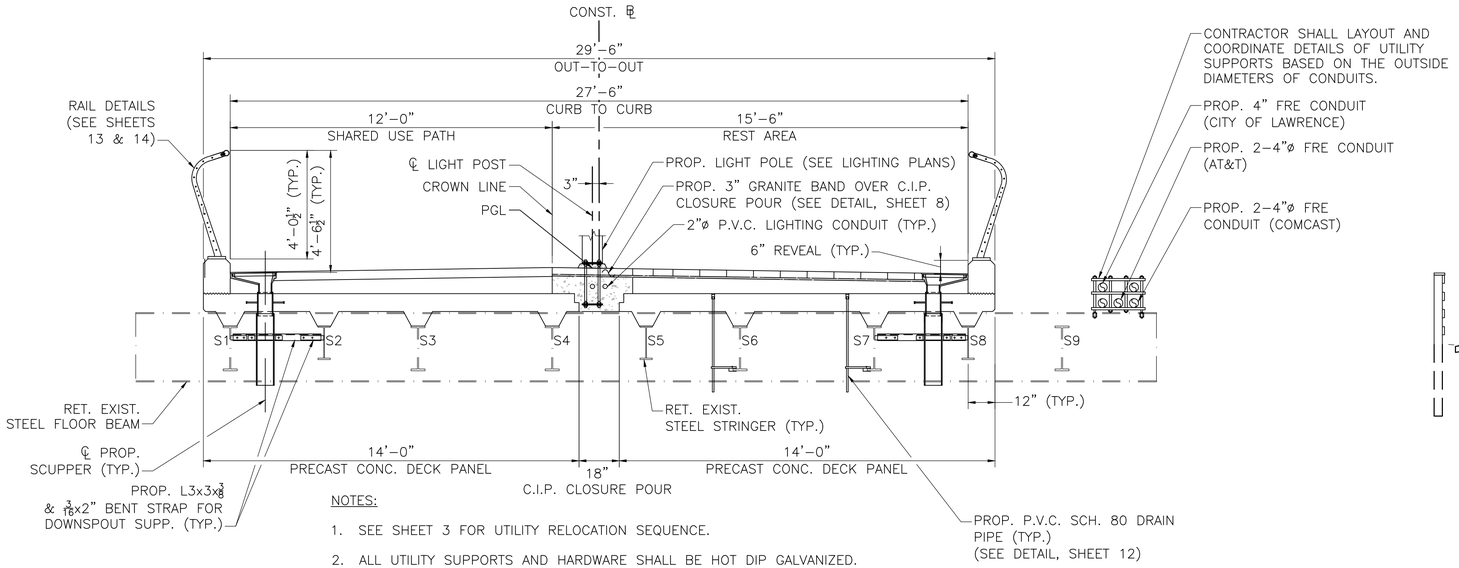

NOTES:

1. SEE SHEET 3 FOR UTILITY RELOCATION SEQUENCE.
2. ALL UTILITY SUPPORTS AND HARDWARE SHALL BE HOT DIP GALVANIZED.
3. ALL CONDUITS SHALL BE FIBERGLASS.
4. ADDITIONAL SUPPORTS AS REQUIRED FOR THE TRANSITION INTO THE ABUTMENTS ARE INCIDENTAL TO THE PAYMENT FOR THE CONDUITS.

SECTION 1
SCALE: ⅜" = 1'–0"

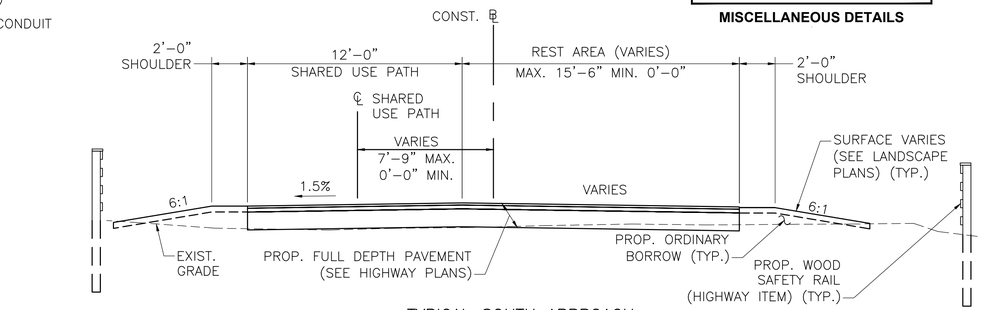

TYPICAL SOUTH APPROACH
STA. 4+32± TO 4+98±

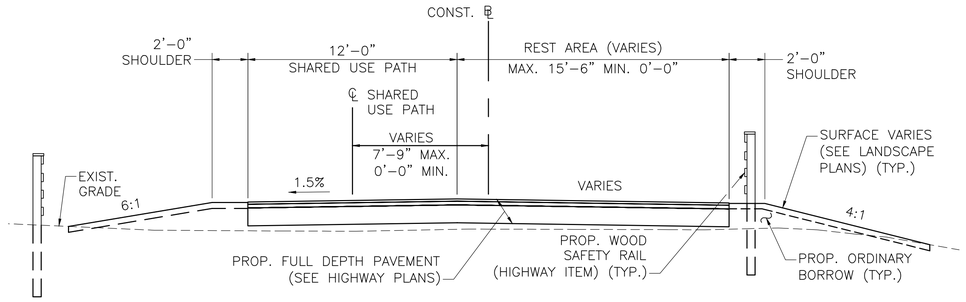

TYPICAL NORTH APPROACH
STA. 10+50± TO 11+16±

ROADWAY APPROACH SECTIONS
NOT TO SCALE

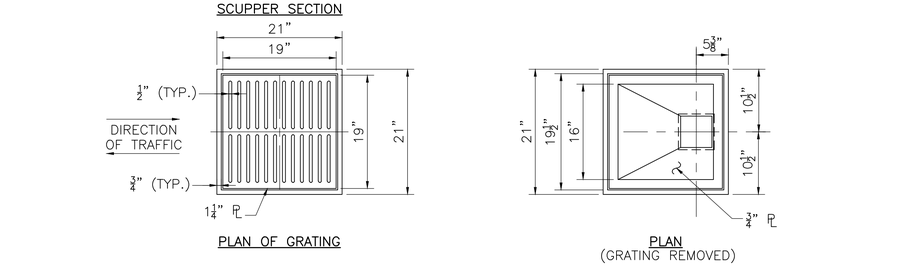

SECTION 3

SCUPPER SECTION

PLAN OF GRATING

PLAN
(GRATING REMOVED)

SCUPPER DETAILS
SCALE: 1" = 1'–0"

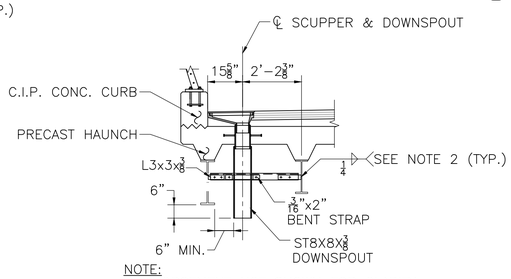

NOTE:
REINFORCEMENT NOT SHOWN FOR CLARITY.

SCUPPER SECTION AT SAFETY CURB
SCALE: ⅜" = 1'–0"

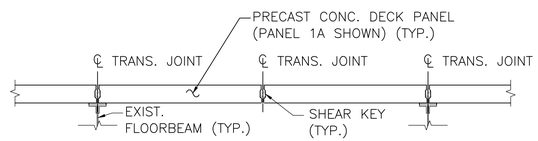

NOTES:
HAUNCH AND STRINGERS NOT SHOWN FOR CLARITY.

SECTION 2
SCALE: ⅜"=1'–0"

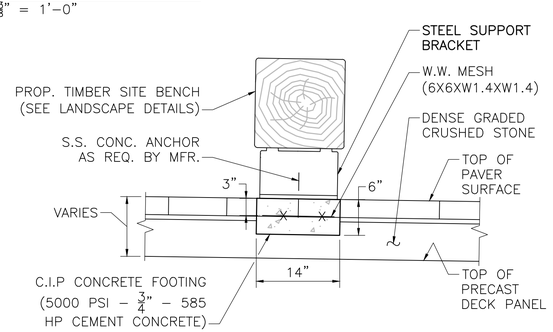

NOTE:
TIMBER SITE BENCH FOOTING SHOWN. STACKED TIMBER SEATING FOOTING SIMILAR. SEE SHEET 6 FOR LOCATIONS.

TIMBER SEATING FOOTING SECTION
SCALE: 1" = 1'–0"

SCUPPER NOTES:

1. ALL STEEL PLATES SHALL BE AASHTO M 270 GRADE 36 AND SQUARE TUBE SHALL BE ASTM A 500 GRADE A OR B.
2. ALL WELDS SHALL BE CONTINUOUS. ALL JOINTS SHALL BE WELDED USING TWO– SIDED ¼" FILLET WELDS OR ¼" PJP WELDS WITH A BACKING SEAL WELD, AS APPLICABLE.
3. LENGTH OF OVERLAP BETWEEN SECTIONS SHALL BE ADJUSTED AS REQUIRED TO SET THE SCUPPER TO THE PROPOSED FINISHED GRADES.
4. SQUARE TUBE SHALL PROJECT A MINIMUM OF ½" ABOVE THE TOP AND 2" BELOW THE BOTTOM SURFACE OF THE DECK PANEL.
5. GRATING SHALL BE ADA COMPLIANT.
6. ALL STEEL TO BE HOT–DIP GALVANIZED. 8" SQUARE TUBE TO BE GALVANIZED AND PAINTED TO MATCH COLOR OF THE STEEL GIRDERS.
7. IF TEMPORARY SUPPORT OF THE SCUPPER IS REQUIRED, THE CONTRACTOR SHALL SUBMIT THE SUPPORT DESIGN TO THE ENGINEER FOR APPROVAL.
8. SCUPPER STATION LOCATIONS SHOWN ON SHEET 6 ARE APPROXIMATE AND ARE SUBJECT TO MINOR VARIATIONS FOR PANEL FABRICATION AND ERECTION TOLERANCES.

SEP. 7, 2024	ISSUED FOR CONSTRUCTION
DATE	DESCRIPTION

THIS SHEET IS APPROVED FOR CONSTRUCTION BY MASSDOT
AUTHORIZED SIGNATORY: STATE BRIDGE ENGINEER

USE ONLY PRINTS OF LATEST DATE

608930_BR11-12(L04032).DWG Plotted on 5-Sep-2024 9:59 PM
07-September-2024 Fourth Structural Submission (S4)

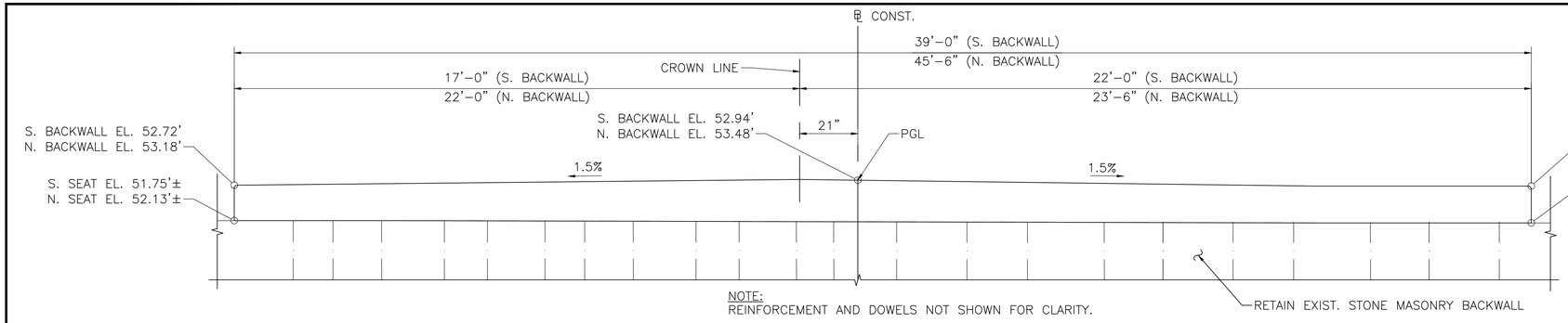

NOTE:
REINFORCEMENT AND DOWELS NOT SHOWN FOR CLARITY.

BACKWALL ELEVATION (LOOKING UPSTATION)

SCALE: ½" = 1'–0"

LAWRENCE
LMRC RAIL TRAIL OVER MERRIMACK RIVER

STATE	FED. AID PROJ. NO.	SHEET NO.	TOTAL SHEETS
MA	CMQ-003S(733)X	150	245
PROJECT FILE NO.	608930		

EXPANSION JOINT DETAILS

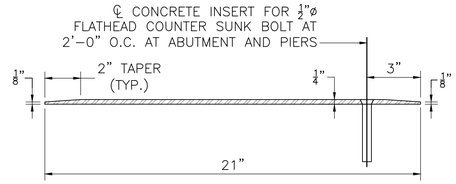

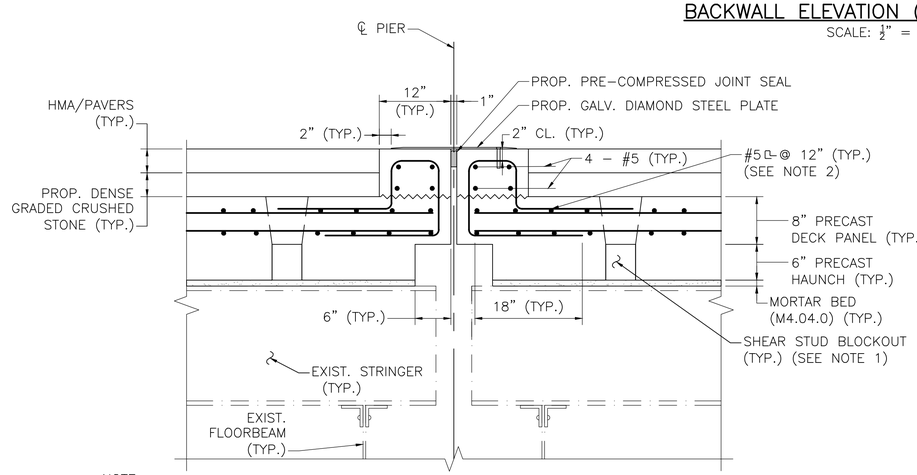

NOTE:
1. SHEAR CONNECTORS NOT SHOWN FOR CLARITY, SEE DETAIL SHEET 9.
2. #5 BARS TO BE CAST INTO DECK PANELS. THE PROJECTION HEIGHT OF THESE BARS WILL VARY. HOLD MINIMUM 2" COVER. RETAINER DOES NOT EXTEND THROUGH CURBS.

LONGITUDINAL SECTION AT PIER

SCALE: 1" = 1'–0"

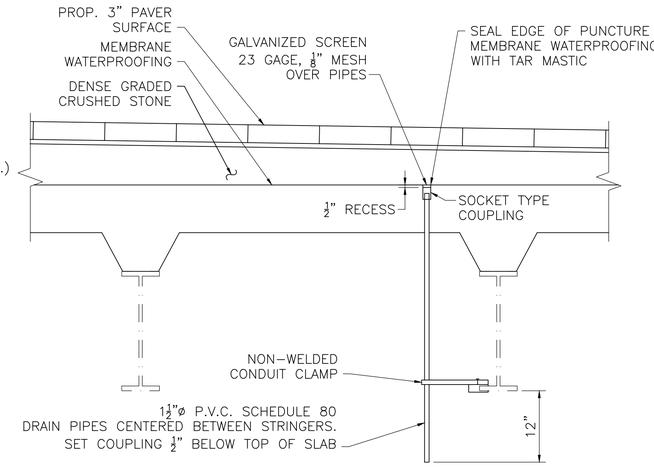

DECK DRAIN PIPES

SCALE: 1" = 1'–0"

DIAMOND STEEL PLATE DETAIL

SCALE: 3"=1'–0"

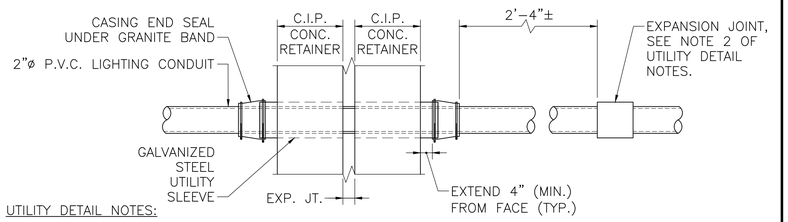

UTILITY DETAIL NOTES:

1. UTILITY SLEEVES SHALL BE STEEL PIPE CONFORMING TO ASTM A53, TYPE S, GRADE B, STANDARD WEIGHT, PLAIN ENDS, HOT–DIP GALVANIZED AND SHALL BE SET IN THE FORMS PRIOR TO PLACING CONCRETE RETAINER.
2. PROVIDE EXPANSION JOINT IN FRONT OF EACH CONCRETE RETAINER.

UTILITY SLEEVE DETAIL

SCALE: NOT TO SCALE

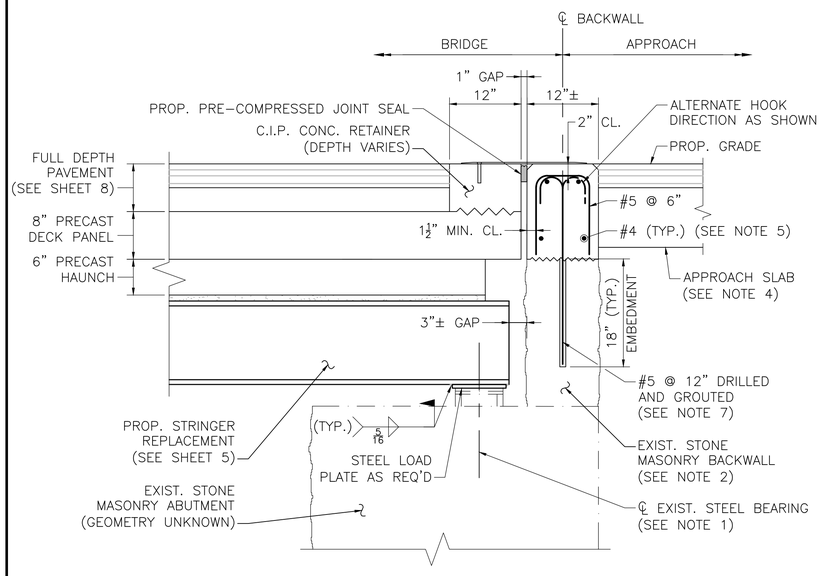

ABUTMENT SECTION

SCALE: 1" = 1'–0"

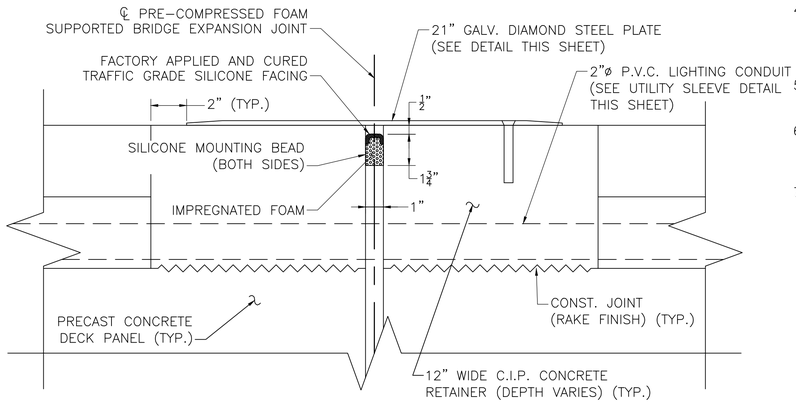

NOTE:
1. EXPANSION JOINT AT PIER SHOWN, JOINT AT ABUTMENT SIMILAR.
2. REINFORCEMENT NOT SHOWN FOR CLARITY.

EXPANSION JOINT DETAIL

SCALE: 3"=1'–0"

ABUTMENT SECTION NOTES:

1. THE EXISTING STRINGER BEARINGS SHALL BE RETAINED AND CLEANED PRIOR TO INSTALLATION OF THE PROPOSED STRINGERS.
2. CONTRACTOR TO VERIFY MASONRY BACKWALL DIMENSIONS FOR PROPOSED CONCRETE BACKWALL CAP. CAP WIDTH SHALL MATCH EXISTING BACKWALL WIDTH. IF BACKWALL IS LESS THAN 11" THICK, THE CONTRACTOR SHALL CONTACT THE ENGINEER PRIOR TO DRILL AND GROUT OPERATIONS.
3. C.I.P. CONCRETE BACKWALL CAP SHALL BE 5000 PSI, ¾" IN., 585 HP CONCRETE.
4. SEE LANDSCAPE PLANS FOR APPROACH SLAB DETAILS. APPROACH SLABS SHALL NOT BE INSTALLED UNTIL ALL WORK ON THE ADJACENT BRIDGE STRUCTURE IS COMPLETED IN PLACE. UNDER NO CIRCUMSTANCES SHALL TEMPORARY CONSTRUCTION EQUIPMENT BE PLACED ON OR NEAR THE APPROACH SLABS.
5. BOTTOM #4 BARS IN BACKWALL SHALL BE PLACE LEVEL. TOP #4 BARS SHOULD BE PLACED SLOPED TO MATCH TOP OF BACKWALL SLOPE.
6. DOWELS CONNECTING THE PROPOSED BACKWALL TO THE EXISTING MASONRY WALL SHALL BE LOCATED NO CLOSER THAN 6" FROM ANY MASONRY JOINT, AND SHALL NOT EXCEED 12" SPACING ALONG THE LENGTH OF THE BACKWALL.
7. DOWELS SHALL NOT BE ORDERED UNTIL THE WIDTH OF THE EXISTING BACKWALL HAS BEEN CONFIRMED. BEND RADIUS OF DOWEL MAY VARY BETWEEN 4 AND 6 BAR DIAMETERS TO ACHIEVE 1½" MINIMUM COVER. IF COVER CANNOT BE ACHIEVED WITH $4d_b$, THE ENGINEER SHALL BE CONTACTED.

SEP. 7, 2024	ISSUED FOR CONSTRUCTION
DATE	DESCRIPTION

THIS SHEET IS APPROVED FOR CONSTRUCTION BY MASSDOT
AUTHORIZED SIGNATORY: STATE BRIDGE ENGINEER
USE ONLY PRINTS OF LATEST DATE

608930_BR11-12(L04032).DWG Plotted on 5-Sep-2024 9:59 PM
Fourth Structural Submission (S4) 07-September-2024

LAWRENCE
LMRC RAIL TRAIL OVER MERRIMACK RIVER

STATE	FED. AID PROJ. NO.	SHEET NO.	TOTAL SHEETS
MA	CMQ-003S(733)X	151	245
	PROJECT FILE NO. 608930		

RAILING DETAILS (1 OF 2)

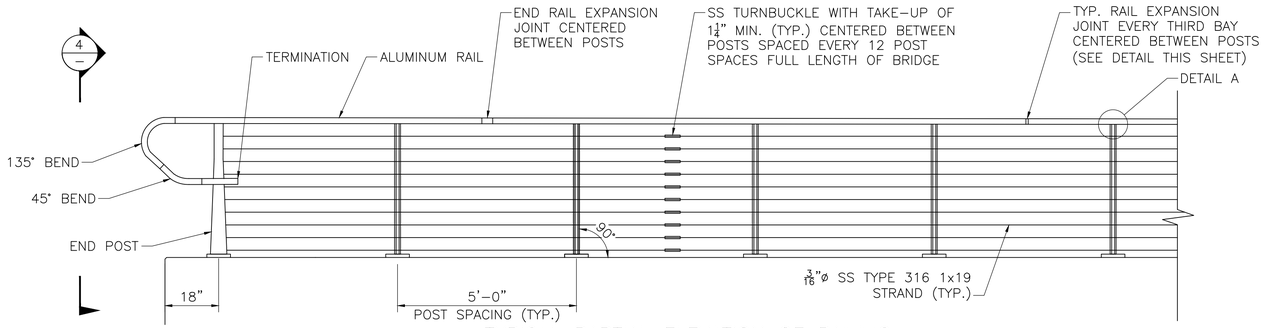

TYPICAL PARTIAL ELEVATION OF RAILING

SCALE: ½" = 1'-0"

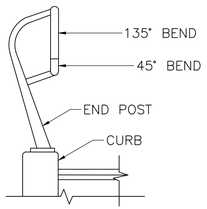

SECTION 4

SCALE: ½" = 1'-0"

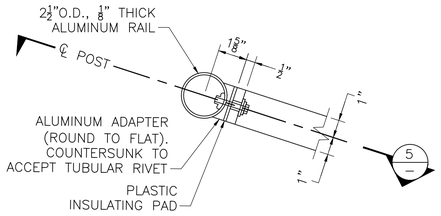

DETAIL A – RAIL MOUNTING

SCALE: 3" = 1'-0"

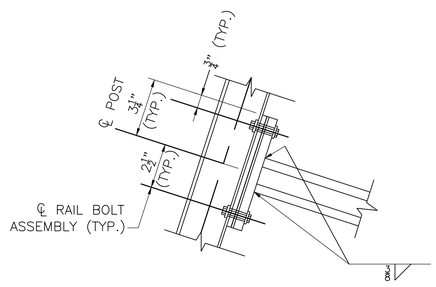

SECTION 5

SCALE: 3" = 1'-0"

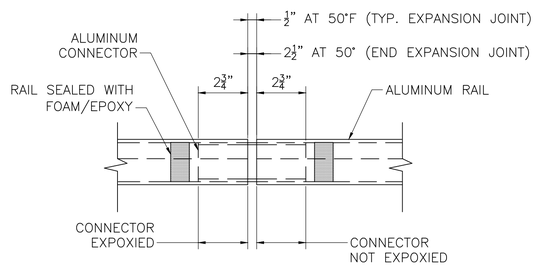

RAIL EXPANSION JOINT DETAIL

SCALE: 3" = 1'-0"

NOTES:

1. SPACING SHOWN IS VALID FOR ENTIRE LENGTH OF SUPERSTRUCTURE, UNLESS OTHERWISE NOTED.
2. RAIL BOLT ASSEMBLY CONSISTS OF A ¼-20 SS BOLT, A STEEL LOCK WASHER, AN ISOLATING PLASTIC TOP HAT WASHER, AND A HEAVY DUTY ALUMINUM TUBULAR RIVET NUT.
3. ALL CONNECTION HARDWARE SHALL BE STAINLESS STEEL.
4. ALL POSTS SHALL CONFORM TO THE REQUIREMENTS OF AASHTO M270 GRADE 36.
5. ALL RAILS SHALL CONFORM TO THE REQUIREMENTS OF ASTM B 221.
6. ALL 3/16"ø SS STRANDS TO BE TYPE 316 1X19. ALL STRANDS TO BE TENSIONED TO 600 POUNDS.
7. STRANDS TO BE TENSIONED USING ALL TURNBUCKLES EVENLY.
8. PROVIDE ALUMINUM END CAP AT ALL RAIL TERMINATIONS.
9. FOR STRAND SPACING AND SLEEVED BOLT LOCATIONS, SEE SHEET 14.
10. IF NECESSARY, STRAND ANCHORAGE TAB DATA SHOWN MAY BE ADJUSTED WITH ENGINEER'S APPROVAL. TABS TO BE ORIENTED VERTICALLY AND SPACED WITH STRANDS. TABS TO BE PLACED ONLY BRIDGE SIDE OF A GIVEN ENDPOST.

SEP. 7, 2024	ISSUED FOR CONSTRUCTION
DATE	DESCRIPTION
THIS SHEET IS APPROVED FOR CONSTRUCTION BY MASSDOT AUTHORIZED SIGNATORY:	STATE BRIDGE ENGINEER
USE ONLY PRINTS OF LATEST DATE	

608930_BR13-14(L04032).DWG Plotted on 5-Sep-2024 9:59 PM
Fourth Structural Submission (S4) 07-September-2024

LAWRENCE
LMRC RAIL TRAIL OVER MERRIMACK RIVER

STATE	FED. AID PROJ. NO.	SHEET NO.	TOTAL SHEETS
MA	CMQ-003S(733)X	152	245
	PROJECT FILE NO. 608930		

RAILING DETAILS (2 OF 2)

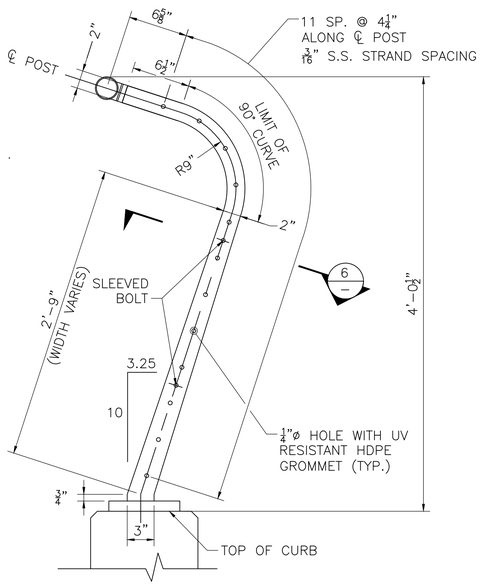

INTERMEDIATE POST DIMENSIONS

SCALE: 1½" = 1'–0"

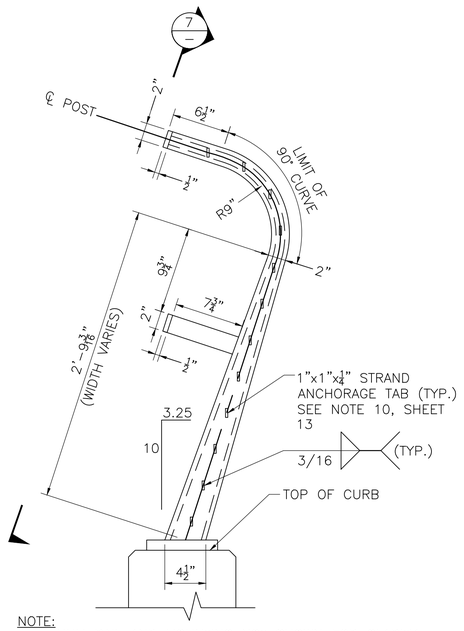

NOTE:
ALUMINUM RAIL AND MOUNTING NOT SHOWN FOR CLARITY.

END POST DIMENSIONS

SCALE: 1½" = 1'–0"

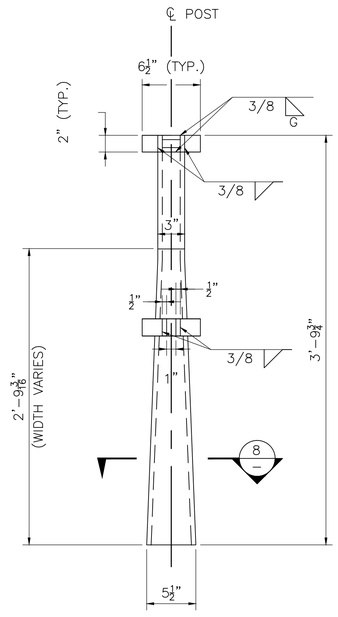

SECTION 7

SCALE: 1½" = 1'–0"

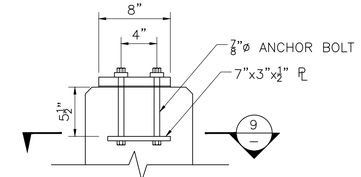

ANCHOR BOLT DETAIL

SCALE: 1½" = 1'–0"

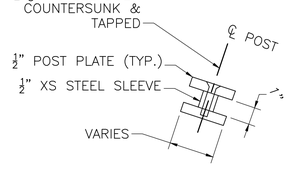

SECTION 6

SCALE: 3" = 1'–0"

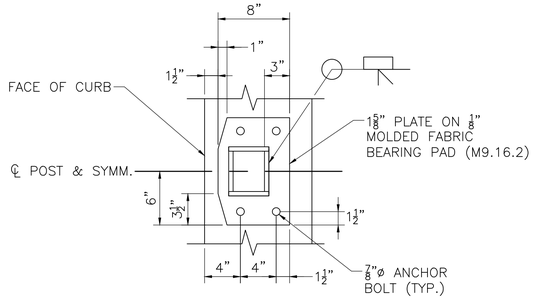

END POST BASE PLATE PLAN

SCALE: 1½" = 1'–0"

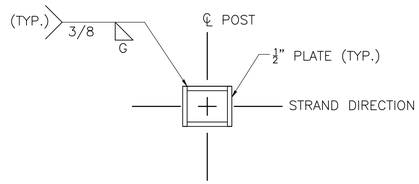

SECTION 8

SCALE: 1½" = 1'–0"

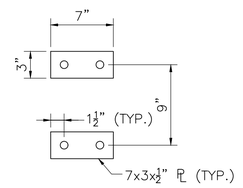

SECTION 9

SCALE: 1½" = 1'–0"

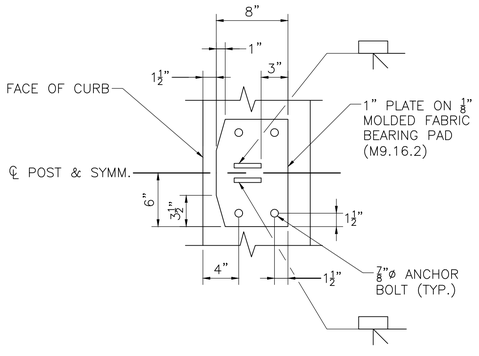

TYPICAL POST BASE PLATE PLAN

SCALE: 1½" = 1'–0"

SEP. 7, 2024	ISSUED FOR CONSTRUCTION
DATE	DESCRIPTION

THIS SHEET IS APPROVED FOR CONSTRUCTION BY MASSDOT
AUTHORIZED SIGNATORY: STATE BRIDGE ENGINEER
USE ONLY PRINTS OF LATEST DATE

608930_BR13-14(L04032).DWG Plotted on 5-Sep-2024 9:59 PM
Fourth Structural Submission (S4) 07-September-2024

LAWRENCE
LMRC RAIL TRAIL OVER SOUTH CANAL

STATE	FED. AID PROJ. NO.	SHEET NO.	TOTAL SHEETS
MA	CMQ-003S(733)X	153	245
	PROJECT FILE NO. 608930		

KEY PLAN, PROFILES, LOCUS, AND INDEX

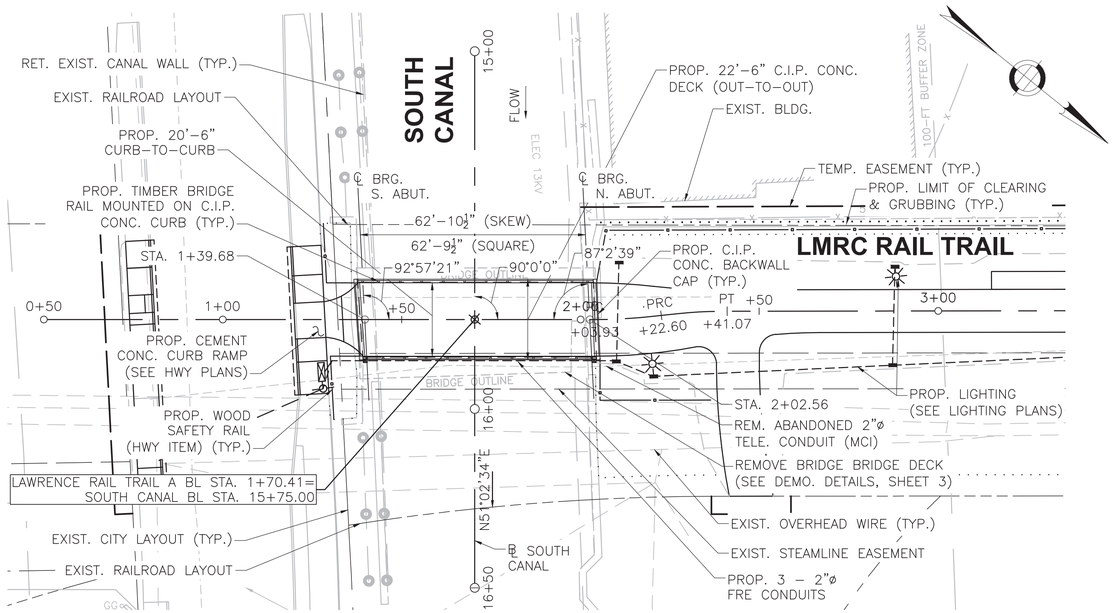

KEY PLAN
SCALE: 1"=20'

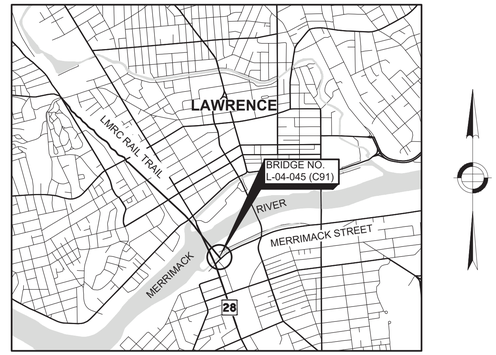

LOCUS MAP
SCALE: 1"=2000'

INDEX OF SHEETS

SHEET NO.	DESCRIPTION
1	KEY PLAN, PROFILES, LOCUS, AND INDEX
2	GENERAL NOTES
3	PLAN AND ELEVATION
4	SUPERSTRUCTURE DETAILS (1 OF 2)
5	SUPERSTRUCTURE DETAILS (2 OF 2)
6	RAILING DETAILS

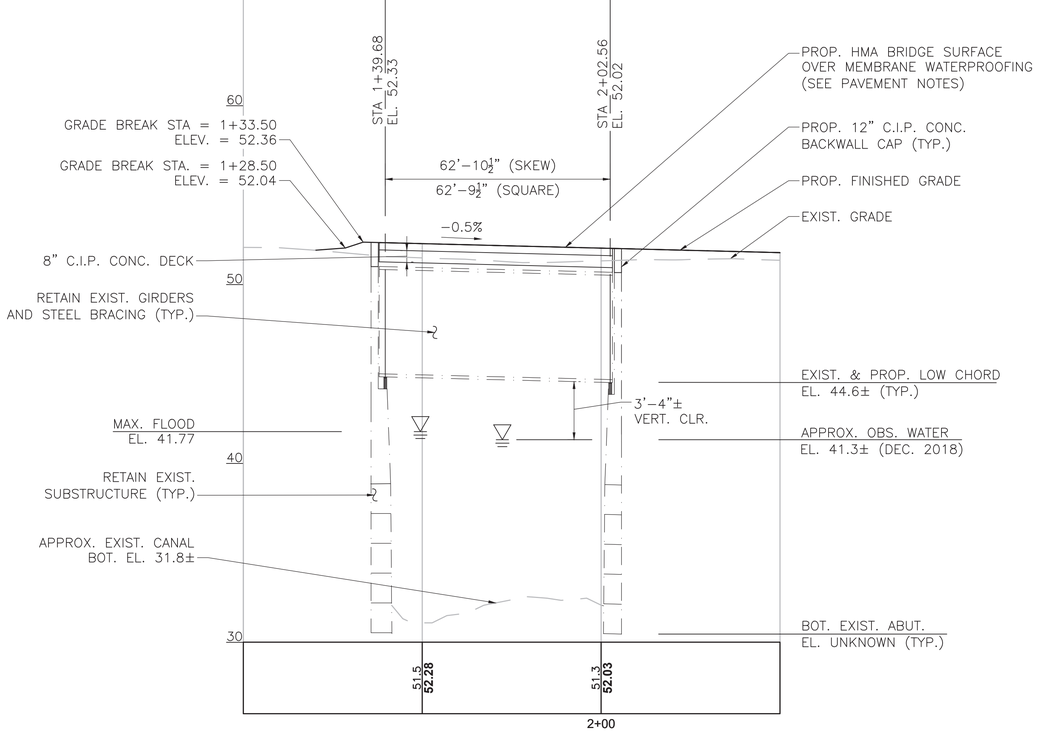

LMRC RAIL TRAIL PROFILE
HORIZONTAL SCALE: 1" = 20'
VERTICAL SCALE" 1" = 4'

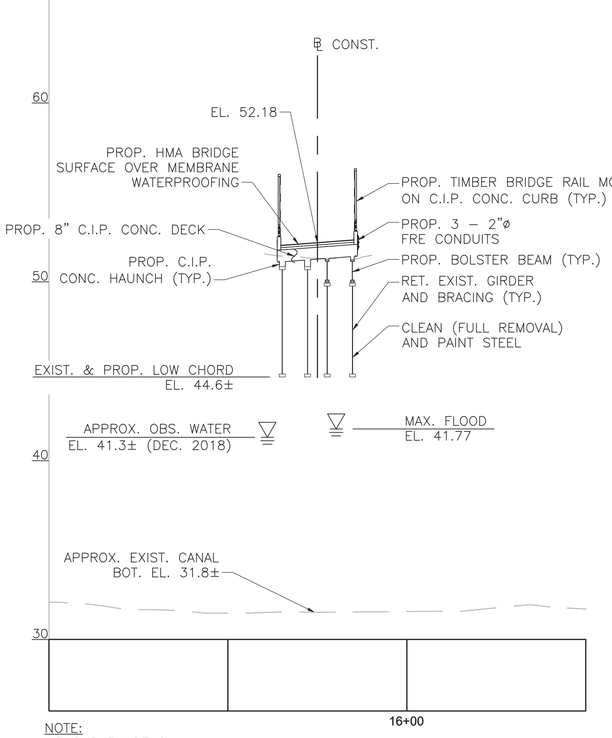

NOTE:
NO SURVEY OF CANAL.

SOUTH CANAL PROFILE
HORIZONTAL SCALE: 1" = 20'
VERTICAL SCALE" 1" = 4'

COMMONWEALTH OF MASSACHUSETTS
JODY P. TRUNFIO
STRUCTURAL
No. 46075
PROFESSIONAL ENGINEER

Jody P. Trunfio Digitally signed by Jody P. Trunfio Date: 2024.09.18 15:50:13 -04'00'

TEC
The Engineering Corp
282 Merrimack Street, Second Floor
Lawrence, MA 01843
978-794-1792

SEP. 7, 2024 | ISSUED FOR CONSTRUCTION

MassDOT Massachusetts Department of Transportation Highway Division

PROPOSED BRIDGE REHABILITATION

LAWRENCE

LMRC RAIL TRAIL
OVER SOUTH CANAL

MASSACHUSETTS DEPARTMENT OF TRANSPORTATION
HIGHWAY DIVISION
10 PARK PLAZA BOSTON, MASS

Alexander K. Bardow, P.E. Digitally signed by Alexander K. Bardow, P.E. Date: 2024.09.20 09:36:26 -04'00'
STATE BRIDGE ENGINEER

Carrie Lavallee, P.E. Digitally signed by Carrie Lavallee, P.E. Date: 2024.09.23 16:58:16 -04'00'
CHIEF ENGINEER

SHEET 1 OF 6 SHEETS BRIDGE NO. L-04-045 (C91)

608930_BR1(L04045).DWG Plotted on 5-Sep-2024 10:06 PM

07-September-2024 Fourth Structural Submittal (S4)

LAWRENCE
LMRC RAIL TRAIL OVER SOUTH CANAL

STATE	FED. AID PROJ. NO.	SHEET NO.	TOTAL SHEETS
MA	CMQ-003S(733)X	154	245
	PROJECT FILE NO. 608930		

GENERAL NOTES

DESIGN:

IN ACCORDANCE WITH THE 2020 AMERICAN ASSOCIATION OF STATE HIGHWAY TRANSPORTATION OFFICIALS (AASHTO) LRFD BRIDGE DESIGN SPECIFICATION, 9TH EDITION WITH CURRENT INTERIM SPECIFICATIONS THROUGH 2021, AND THE 2009 AASHTO LRFD GUIDE SPECIFICATIONS FOR THE DESIGN OF PEDESTRIAN BRIDGES WITH INTERIM SPECIFICATIONS THROUGH 2015 FOR H10 VEHICULAR LOADING AND 90 PSF PEDESTRIAN LOADING.

EXISTING CONDITIONS:

ALL DIMENSIONS AND DETAILS OF THE EXISTING STRUCTURE SHOWN ON THESE CONSTRUCTION DRAWINGS ARE NOT GUARANTEED. THE CONTRACTOR SHALL DETERMINE AND ESTABLISH ALL DIMENSIONS AND EXISTING DETAILS NECESSARY FOR THE COMPLETION OF ALL WORK BY FIELD MEASUREMENTS AND SURVEY. THE CONTRACTOR SHALL BE RESPONSIBLE FOR THE ADEQUACY AND ACCURACY THEREOF, AND SHALL NOT ORDER ANY MATERIAL OR COMMENCE FABRICATION UNTIL HE/SHE HAS MADE THE REQUIRED MEASUREMENTS ON THE ACTUAL STRUCTURE AND THE EXTENT OF THE PROPOSED WORK HAS BEEN APPROVED BY THE ENGINEER.

MASSDOT BENCHMARKS:

BENCHMARK 1: MAG NAIL (42)
N: 3080300.036
E: 746593.348
ELEVATION= 52.01'

BENCHMARK 2: MAG NAIL (41)
N: 3080446.799
E: 746438.265
ELEVATION= 51.35'

ELEVATIONS ARE BASED ON THE NORTH AMERICAN VERTICAL DATUM (NAVD) OF 1988.

SCALES:

SCALES NOTED ON THE PLANS ARE NOT APPLICABLE TO REDUCED SIZE PRINTS. DIVIDE SCALES BY 2 FOR HALF-SIZE PRINTS (A3).

UNSUITABLE MATERIAL:

ALL UNSUITABLE MATERIAL SHALL BE REMOVED WITHIN THE LIMITS OF THE FOUNDATIONS OF THE STRUCTURE, AS DIRECTED BY THE ENGINEER.

CONCRETE:

ALL CONCRETE SHALL BE 5000 PSI, ¾", 585 HP CEMENT CONCRETE.

DRILLED AND GROUTED DOWELS:

DOWELS SHALL MEET THE REQUIREMENTS OF AASHTO M 31 GRADE 60. ALL DOWELS SHALL BE EPOXY COATED.

REINFORCEMENT:

ALL REINFORCING STEEL SHALL BE EPOXY COATED.

REINFORCING STEEL SHALL CONFORM TO THE REQUIREMENTS OF AASHTO M 31 GRADE 60. UNLESS OTHERWISE NOTED ON THE CONSTRUCTION DRAWINGS, ALL BARS SHALL BE LAPPED AS FOLLOWS:

MODIFICATION CONDITION:	#4 BARS	#5 BARS	#6 BARS
1. NONE	16"	19"	23"
2. 12" OF CONCRETE BELOW BAR	20"	25"	30"
3. EPOXY COATED BARS, COVER < 3db, OR CLEAR SPACING < 6db	23"	29"	34"
4. COATED BARS, ALL OTHER CASES	18"	23"	27"
5. CONDITION 2. AND 3.	26"	32"	39"
6. CONDITION 2. AND 4.	24"	30"	36"

ALL OTHER BARS SHALL BE LAPPED AS SHOWN ON THE CONSTRUCTION DRAWINGS.

MEMBRANE WATERPROOFING:

ALL MEMBRANE WATERPROOFING USED ON BRIDGE DECKS SHALL BE MEMBRANE WATERPROOFING FOR BRIDGE DECKS – SPRAY APPLIED.

STRUCTURAL STEEL:

ALL STRUCTURAL STEEL SHALL CONFORM TO THE REQUIREMENTS OF AASHTO M 270, GRADE 36 AND SHALL BE HOT-DIP GALVANIZED, EXCEPT AS NOTED. ALL BOLTS SHALL BE ASTM 3125. DIAMETERS AS SHOWN ON PLANS. ALL BOLT HOLES SHALL BE 1/16" LARGER THAN BOLTS. ALL BOLTED CONNECTIONS SHALL BE CONSIDERED SLIP CRITICAL WITH CLASS C FAYING SURFACES.

ALL EXISTING AND PROPOSED STRUCTURAL STEEL SHALL BE PAINTED. PAINT COLOR SHALL BE COORDINATED WITH THE ENGINEER AND THE CITY OF LAWRENCE. THE CONTRACTOR SHALL USE FED. STANDARD 595 COLORS. INTERMEDIATE AND FINISH COATS SHALL NOT BE APPLIED UNTIL THE BOLSTER BEAM INSTALLATION IS COMPLETE. NOTE THE TOP OF THE TOP FLANGE OF G1 AND G2 AND THE TOP OF THE TOP FLANGE OF THE BOLSTER BEAMS AT G3 AND G4 SHALL BE PRIMED ONLY. PRIMER APPLIED BEFORE THESE ACTIVITIES SHALL BE BLAST CLEANED AND REPRIMED BY THE CONTRACTOR.

INSPECTIONS HAVE NOT INDICATED THAT THE BRIDGE IS PAINTED. HOWEVER, BASED ON THE AGE OF CONSTRUCTION, THE POTENTIAL EXISTS FOR THE PRESENCE OF LEAD PAINT ON COMPONENTS THAT MAY NOT HAVE BEEN OBSERVED DURING INSPECTIONS. THE CONTRACTOR IS ALERTED TO THIS POTENTIAL AND SHOULD CONFIRM THERE ARE NO PAINTED COMPONENTS OF THE BRIDGE PRIOR TO BLAST CLEANING. REFER TO THE SPECIAL PROVISIONS FOR MORE INFORMATION.

CONTRACTOR SHALL PERFORM A VISUAL INSPECTION OF THE EXISTING STRUCTURAL STEEL PRIOR TO COMMENCEMENT OF CONSTRUCTION. ANY MAJOR STRUCTURAL DEFICIENCY OR DISCREPANCY FROM WHAT IS SHOWN ON THE PLANS SHALL BE IMMEDIATELY PRESENTED TO THE ENGINEER FOR CONFIRMATION. NO PROCUREMENT OF MATERIALS OR FABRICATION SHALL TAKE PLACE UNTIL THIS INSPECTION IS FINALIZED AND REVIEWED BY THE ENGINEER. REFER TO THE SPECIAL PROVISIONS FOR MORE INFORMATION.

TEMPORARY PROTECTIVE SHIELDING:
THE CONTRACTOR SHALL INSTALL SHIELDING PRIOR TO START OF WORK AND SHALL ONLY BE REMOVED UPON APPROVAL OF THE ENGINEER.

UTILITIES:

PRIOR TO CONSTRUCTION, THE CONTRACTOR SHALL LOCATE AND PROTECT FROM DAMAGE ALL UTILITIES THAT ARE TO REMAIN IN PLACE.

GEOTECHNICAL:

NO GEOTECHNICAL TESTING WAS PERFORMED AT THIS LOCATION.

SEE ABUTMENT REUSE MEMO, DATED FEBRUARY 2021 BY TEC, INC.

LUMBER:

LUMBER FOR RAIL POST SHALL BE PRESSURE TREATED VISUALLY GRADED SOUTHERN YELLOW PINE, SELECT STRUCTURAL OR BETTER.

LUMBER SHALL BE KILN DRIED TO A MOISTURE CONTENT OF NO MORE THAN 19% AFTER TREATMENT.

ALL TIMBER DIMENSIONS SHOWN ARE NOMINAL.

MINIMUM DESIGN VALUES FOR VISUALLY GRADED SOUTHERN YELLOW PINE						
SIZE	BENDING Fb (PSI)	TENSION PARALLEL TO GRAIN F_t (PSI)	SHEAR PARALLEL TO GRAIN F_v (PSI)	COMPRESSION PERPENDICULAR TO GRAIN $F_{c\perp}$ (PSI)	COMPRESSION PARALLEL TO GRAIN $F_{c\parallel}$ (PSI)	MODULUS OF ELASTICITY E (PSI)
5"X5" AND LARGER	1500	1000	165	375	950	1,500,000

LUMBER FOR HAND RAILS AND RAIL CAPS SHALL BE IPE.

MINIMUM DESIGN VALUES FOR IPE			
SIZE	BENDING Fb (PSI)	CRUSHING STRENGTH (PSI)	MODULUS OF ELASTICITY E (PSI)
ALL	22,500	10,000	2,900,000

IPE TIMBER SHALL BE FINISHED WITH A PRESERVATIVE OIL COATING.

ESTIMATED QUANTITIES
(NOT GUARANTEED)

ITEM DESCRIPTION	QUANTITY	UNITS
STRUCTURAL STEEL REPAIRS, BRIDGE NO. L-04-045 (C91)	1	LS
PARTIAL DEMOLITION OF SUPERSTRUCTURE OF BRIDGE NO. L-04-045 (C91)	1	LS
SUPERPAVE BRIDGE SURFACE COURSE – 9.5 – (SSC-B-9.5)	15	TON
SUPERPAVE BRIDGE PROTECTIVE COURSE – 12.5 (SPC-B-12.5)	15	TON
CLEAN (FULL REMOVAL) AND PAINT STEEL BRIDGE NO. L-04-045 (C91)	1	LS
ALTERATION TO BRIDGE STRUCTURE NO. L-04-045 (C91)	1	LS
STRUCTURAL STEEL INSPECTION, BRIDGE NO. L-04-045 (C91)	1	LS
TEMPORARY PROTECTIVE SHIELDING BRIDGE NO. L-04-045 (C91)	1	LS

SEISMIC DESIGN CRITERIA	
DESIGN RETURN PERIOD:	1000
DESIGN SPECTRA	
As	N/A
SDs	N/A
SD1	N/A
SITE CLASS	N/A
SEISMIC DESIGN CATEGORY (SDC)	N/A

HYDRAULIC DESIGN DATA	
DRAINAGE AREA (SQ. MILES)	N/A
DESIGN FLOOD DISCHARGE (C.F.S.)	N/A
DESIGN FLOOD FREQUENCY (YEARS)	N/A
DESIGN FLOOD VELOCITY (F.P.S.)	N/A
DESIGN FLOOD ELEVATION (FEET, NAVD)	N/A
BASE (100-YEAR) FLOOD DATA	
BASE FLOOD DISCHARGE (C.F.S.)	N/A
BASE FLOOD ELEVATION (FEET, NAVD)	N/A
DESIGN AND CHECK SCOUR DATA	
DESIGN SCOUR FLOOD EVENT RETURN FREQUENCY (YEARS)	N/A
DESIGN FLOOD ABUTMENT SCOUR DEPTH (FEET)	N/A
DESIGN FLOOD PIER SCOUR DEPTH (FEET)	N/A
CHECK SCOUR FLOOD EVENT RETURN FREQUENCY (YEARS)	N/A
CHECK FLOOD ABUTMENT SCOUR DEPTH (FEET)	N/A
CHECK FLOOD PIER SCOUR DEPTH (FEET)	N/A
FLOOD OF RECORD	
DISCHARGE (C.F.S.)	N/A
FREQUENCY (IF KNOWN, YEARS)	N/A
MAXIMUM ELEVATION (FEET, NAVD)	41.77'
DATE (MM/YYYY)	N/A
HISTORY OF ICE FLOES	N/A
EVIDENCE OF SCOUR AND EROSION	N/A

SEP. 7, 2024	ISSUED FOR CONSTRUCTION
DATE	DESCRIPTION

THIS SHEET IS APPROVED FOR CONSTRUCTION BY MASSDOT
AUTHORIZED SIGNATORY: STATE BRIDGE ENGINEER

USE ONLY PRINTS OF LATEST DATE

608930_BR2(L04045).DWG Plotted on 5-Sep-2024 10:06 PM
07-September-2024
Fourth Structural Submittal (S4)

LAWRENCE
LMRC RAIL TRAIL OVER SOUTH CANAL

STATE	FED. AID PROJ. NO.	SHEET NO.	TOTAL SHEETS
MA	CMQ-003S(733)X	155	245
	PROJECT FILE NO. 608930		

PLAN AND ELEVATION

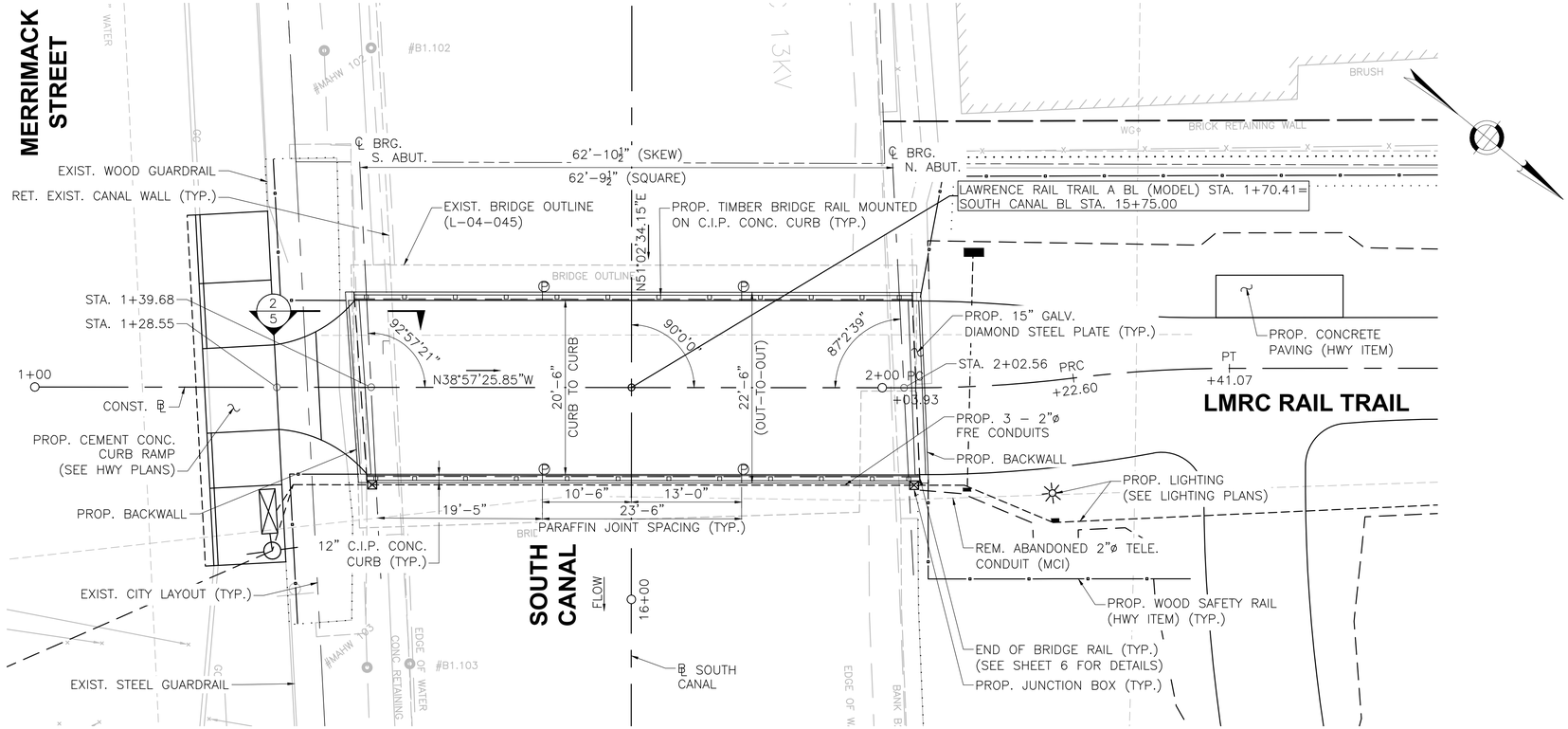

LEGEND:
Ⓟ PROPOSED PARAFFIN JOINT

PLAN
SCALE: ⅛"=1'-0"

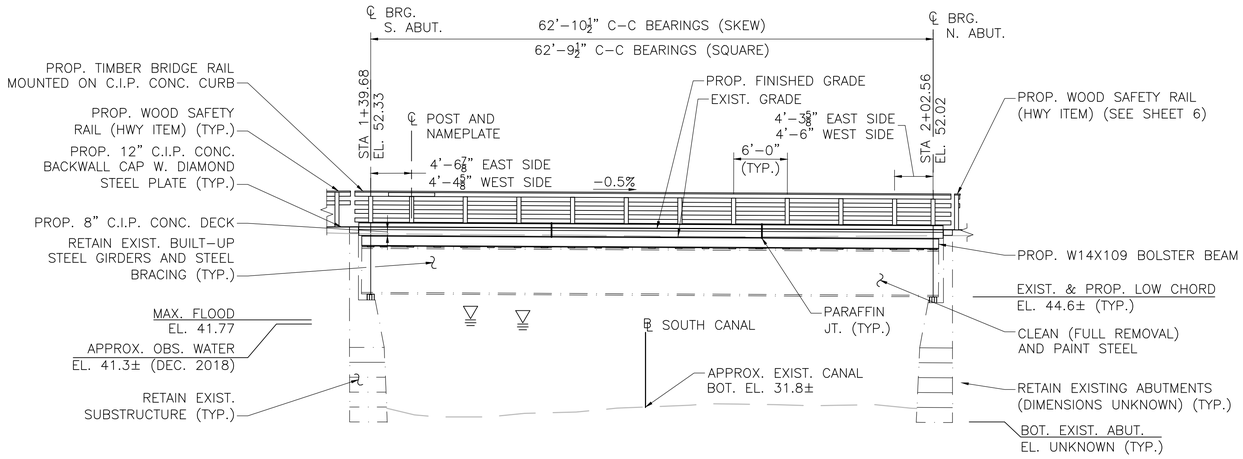

NOTES:
1. PROPOSED FRE CONDUITS NOT SHOWN FOR CLARITY.
2. GEOMETRY OF EXISTING SUBSTRUCTURE IS APPROXIMATE BASED OFF OF VISUAL INSPECTION AND AVAILABLE SURVEY. LIMITS, BATTER AND ELEVATIONS UNKNOWN.

EAST ELEVATION
SCALE: ⅛"=1'-0"

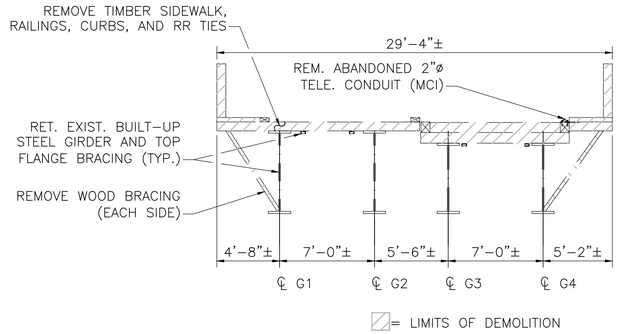

DEMOLITION SCHEMATIC
NTS

SEP. 7, 2024	ISSUED FOR CONSTRUCTION
DATE	DESCRIPTION

THIS SHEET IS APPROVED FOR CONSTRUCTION BY MASSDOT
AUTHORIZED SIGNATORY: STATE BRIDGE ENGINEER
USE ONLY PRINTS OF LATEST DATE

608930_BR3(L04045).DWG Plotted on 5-Sep-2024 10:08 PM
07-September-2024 Fourth Structural Submittal (S4)

LAWRENCE
LMRC RAIL TRAIL OVER SOUTH CANAL

STATE	FED. AID PROJ. NO.	SHEET NO.	TOTAL SHEETS
MA	CMQ-003S(733)X	156	245
PROJECT FILE NO.	608930		

SUPERSTRUCTURE DETAILS (1 OF 2)

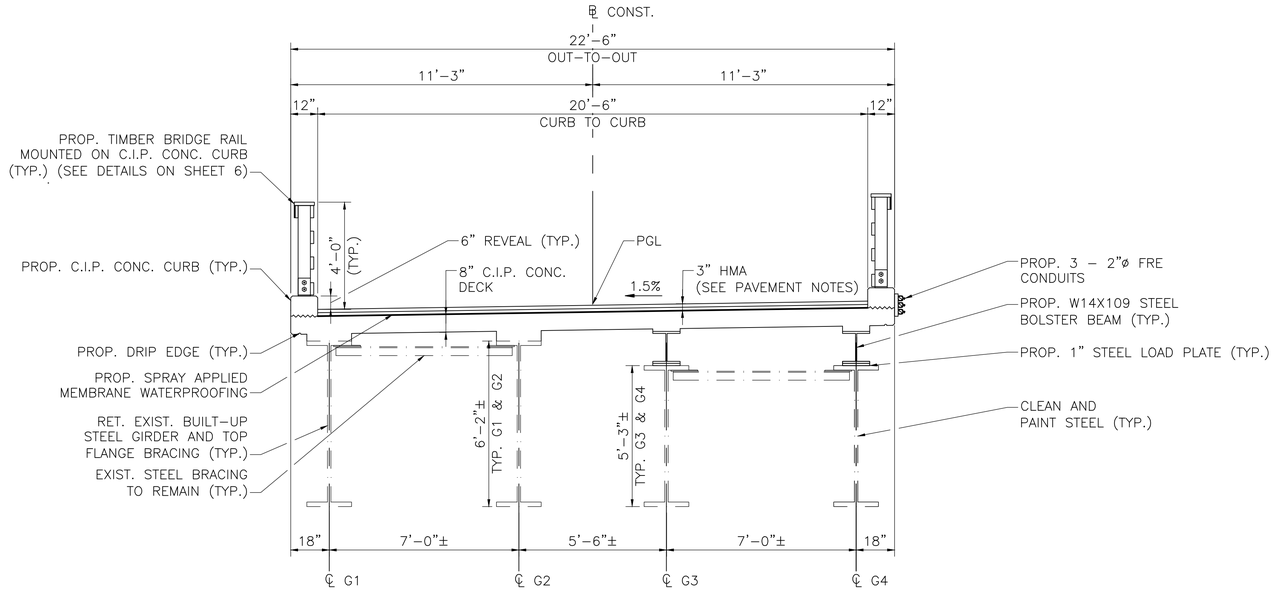

TYPICAL SECTION
SCALE: $\frac{3}{8}$" = 1'–0"

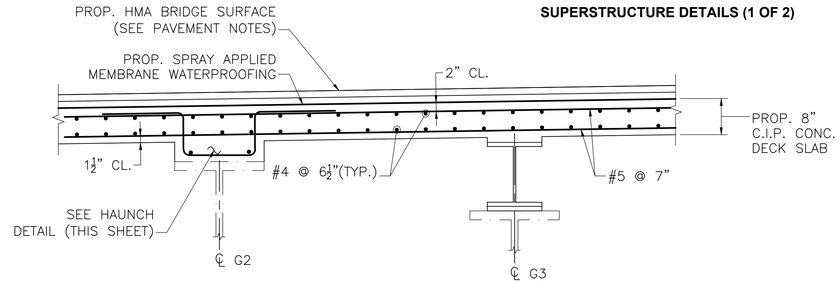

NOTES:
1. DECK SLAB AND CURBS SHALL BE 5000 PSI, $\frac{3}{4}$ IN, 585 HP CEMENT CONCRETE.
2. LONGITUDINAL REINFORCEMENT SHALL BE PLACED PARALLEL TO THE ℄ OF CONSTRUCTION.

   TRANSVERSE (PRIMARY) REINFORCEMENT SHALL BE PLACED PERPENDICULAR TO THE ℄ OF CONSTRUCTION.
3. ALL REINFORCEMENT AND SUPPORT DEVICES SHALL BE EPOXY COATED.
4. THE FINISHED SURFACE OF BRIDGE DECK SHALL BE SMOOTH AND WITHOUT ANY PROJECTIONS THAT COULD PUNCTURE THE MEMBRANE WATERPROOFING OR DEPRESSIONS THAT COULD RETAIN WATER.

TYPICAL DECK REINFORCEMENT
SCALE: $\frac{3}{4}$" = 1'–0"

PAVEMENT NOTES:

HMA BRIDGE SURFACE
SURFACE: 1½" SUPERPAVE BRIDGE SURFACE COURSE (SSC–B–9.5) OVER
1½" SUPERPAVE BRIDGE PROTECTIVE COURSE (SPC–B–12.5)

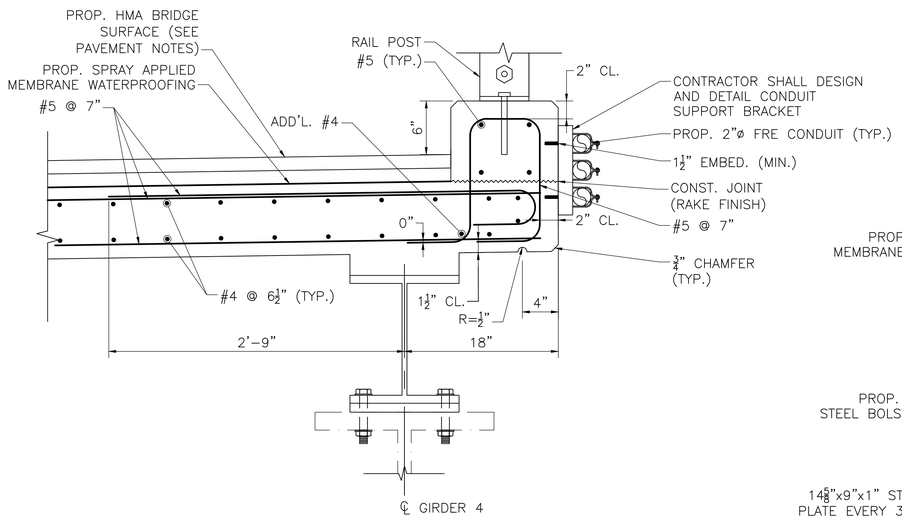

SECTION THROUGH CURB AND OVERHANG (EAST SIDE SHOWN, WEST SIDE SIMILAR)
SCALE: 1½" = 1'–0"

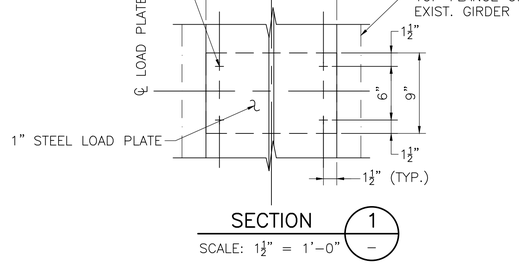

SECTION 1 – 1
SCALE: 1½" = 1'–0"

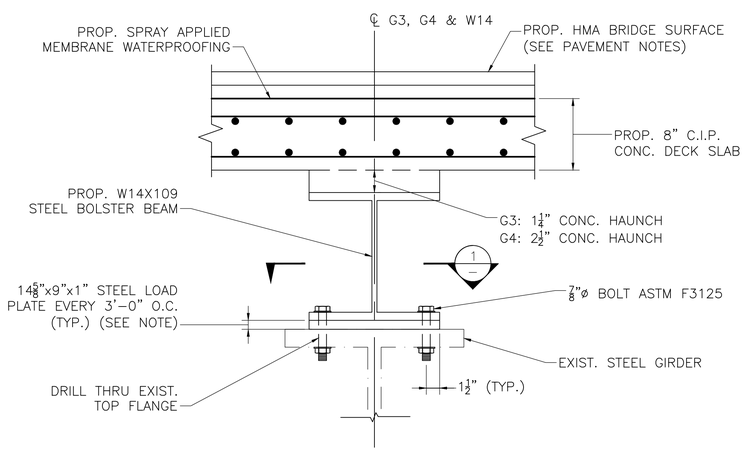

NOTE:
SPACE STEEL LOAD PLATES TO AVOID EXISTING TOP FLANGE BRACING. SPACING SHOWN IS APPROXIMATE. SPACING SHALL NOT EXCEED 3'–0".

HAUNCH DETAIL (G3 AND G4)
SCALE: 1½" = 1'–0"

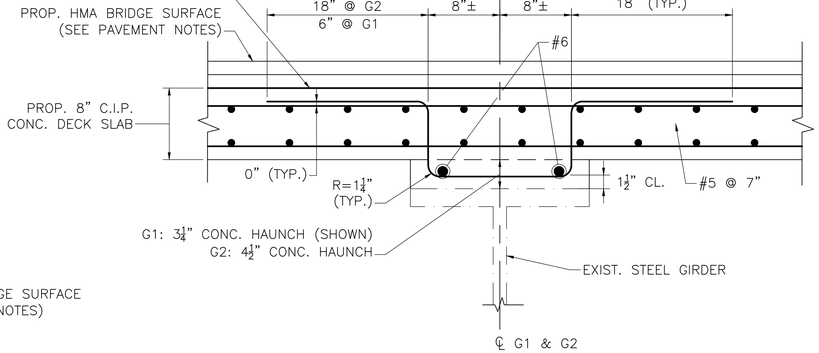

REINFORCED HAUNCH DETAIL (G1 AND G2)
SCALE: 1½" = 1'–0"

HAUNCH NOTES:

1. HAUNCH HEIGHTS SHOWN ARE ESTIMATED AT THE CENTERLINE OF BEARING.
2. HAUNCH HEIGHTS WILL VARY WITHIN THE SPAN LENGTH. THE REINFORCED HAUNCH DETAIL SHOWN FOR G1 AND G2 SHALL BE APPLIED TO ANY LOCATION WHERE THE HAUNCH THICKNESS EXCEEDS 3½". THE ADDITIONAL REINFORCEMENT MAY BE OMITTED FOR HAUNCH HEIGHTS LESS THAN OR EQUAL TO 3½".

DATE	DESCRIPTION
SEP. 7, 2024	ISSUED FOR CONSTRUCTION

THIS SHEET IS APPROVED FOR CONSTRUCTION BY MASSDOT
AUTHORIZED SIGNATORY: STATE BRIDGE ENGINEER
USE ONLY PRINTS OF LATEST DATE

608930_BR4-7(L04045).DWG Plotted on 5-Sep-2024 10:08 PM
07-September-2024 Fourth Structural Submittal (S4)

LAWRENCE
LMRC RAIL TRAIL OVER SOUTH CANAL

STATE	FED. AID PROJ. NO.	SHEET NO.	TOTAL SHEETS
MA	CMQ-003S(733)X	157	245
	PROJECT FILE NO. 608930		

SUPERSTRUCTURE DETAILS (2 OF 2)

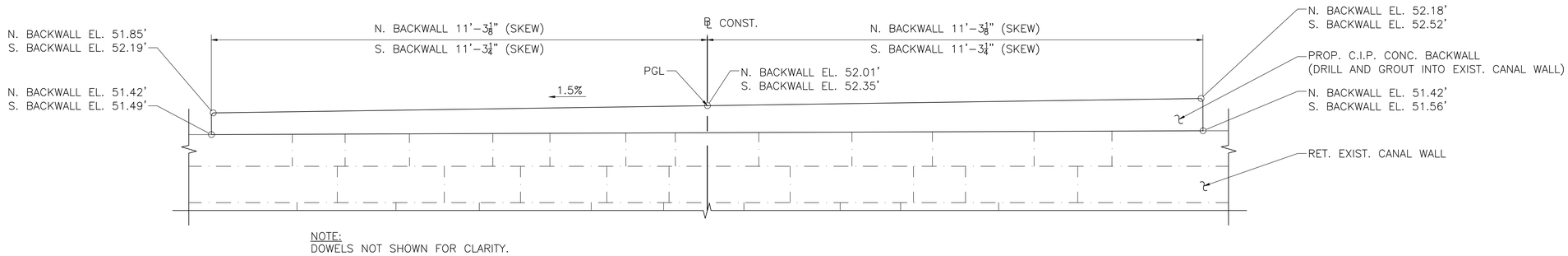

NOTE:
DOWELS NOT SHOWN FOR CLARITY.

BACKWALL ELEVATION
SCALE: ¾" = 1'-0"

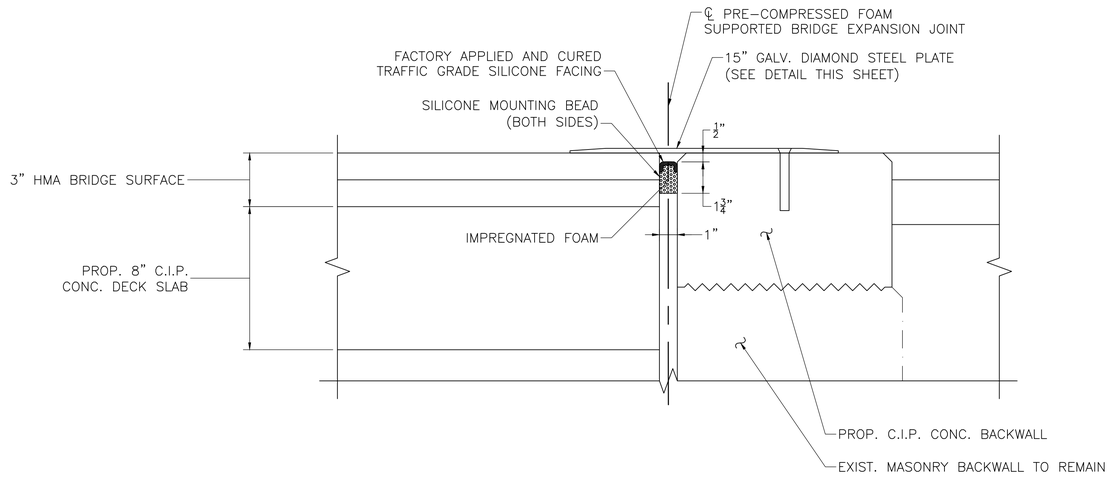

DECK JOINT DETAIL
SCALE: 3"=1'-0"

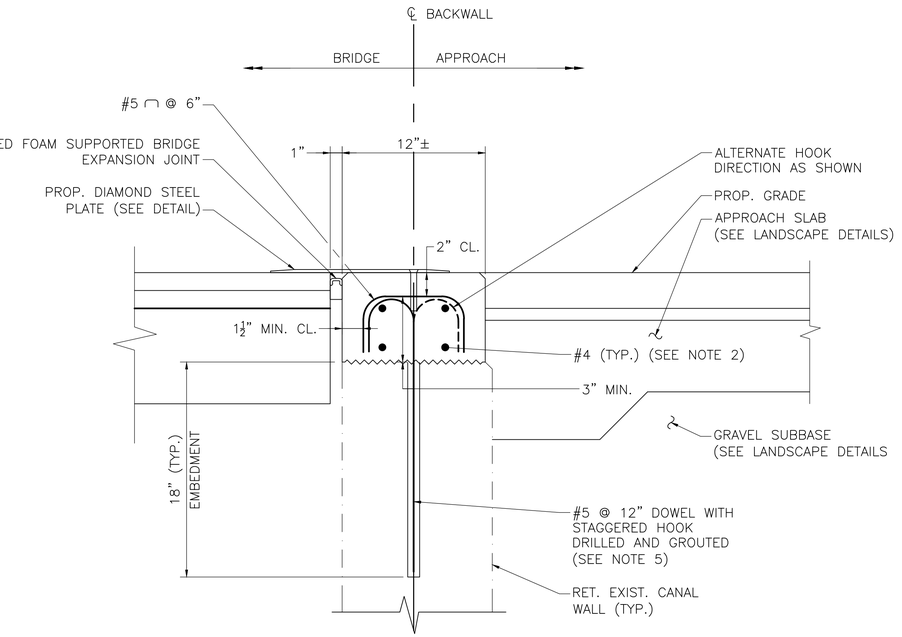

SECTION 2/3
SCALE: 2" = 1'-0"

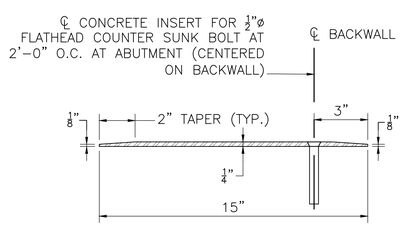

DIAMOND STEEL PLATE DETAIL
SCALE: 3" = 1'-0"

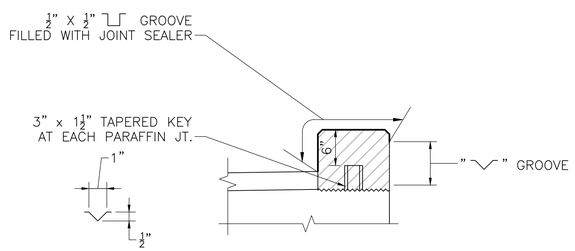

PARAFFIN JOINT NOTES:

1. ALL CONCRETE ABOVE SLAB SHALL BE POURED IN ALTERNATING SECTIONS WITH NO LESS THAN 3 DAYS BETWEEN POURS.
2. DO NOT CARRY LONGITUDINAL BARS THROUGH THE PARAFFIN JOINTS. END THE REINFOCEMENT 2" CLEAR OF JOINT.
3. JOINT SHALL BE SQUARE TO FACE OF CURB.

PARAFFIN JOINT DETAIL
SCALE: 1" = 1'-0"

BACKWALL NOTES:

1. DOWELS CONNECTING THE PROPOSED BACKWALL TO THE EXISTING MASONRY WALL SHALL BE LOCATED NO CLOSER THAN 6" FROM ANY MASONRY JOINT, AND SHALL NOT EXCEED 12" SPACING ALONG THE LENGTH OF THE BACKWALL.
2. BOTTOM #4 BARS IN BACKWALL SHALL BE PLACE LEVEL. TOP #4 BARS SHALL BE PLACED SLOPED TO MATCH TOP OF BACKWALL SLOPE.
3. CONTRACTOR TO VERIFY MASONRY ABUTMENT DIMENSIONS FOR THE PROPOSED CONCRETE CAP PRIOR TO ORDERING HOOKED DOWELS.
4. THE PROPOSED CONCRETE BACKWALL SHALL BE 5000 PSI, ¾", 585 HP CONCRETE.
5. DOWELS SHALL NOT BE ORDERED UNTIL THE WIDTH OF THE EXISTING BACKWALL HAS BEEN CONFIRMED. BEND RADIUS OF DOWEL MAY VARY BETWEEN 4 AND 6 BAR DIAMETERS TO ACHIEVE 1½" MINIMUM COVER. IF COVER CANNOT BE ACHIEVED WITH $4d_b$, THE ENGINEER SHALL BE CONTACTED.

SEP. 7, 2024	ISSUED FOR CONSTRUCTION
DATE	DESCRIPTION
THIS SHEET IS APPROVED FOR CONSTRUCTION BY MASSDOT AUTHORIZED SIGNATORY:	STATE BRIDGE ENGINEER
USE ONLY PRINTS OF LATEST DATE	

608930_BR4-7(L04045).DWG Plotted on 5-Sep-2024 10:08 PM
07-September-2024
Fourth Structural Submittal (S4)

LAWRENCE
LMRC RAIL TRAIL OVER SOUTH CANAL

STATE	FED. AID PROJ. NO.	SHEET NO.	TOTAL SHEETS
MA	CMQ-003S(733)X	158	245
	PROJECT FILE NO. 608930		

RAILING DETAILS

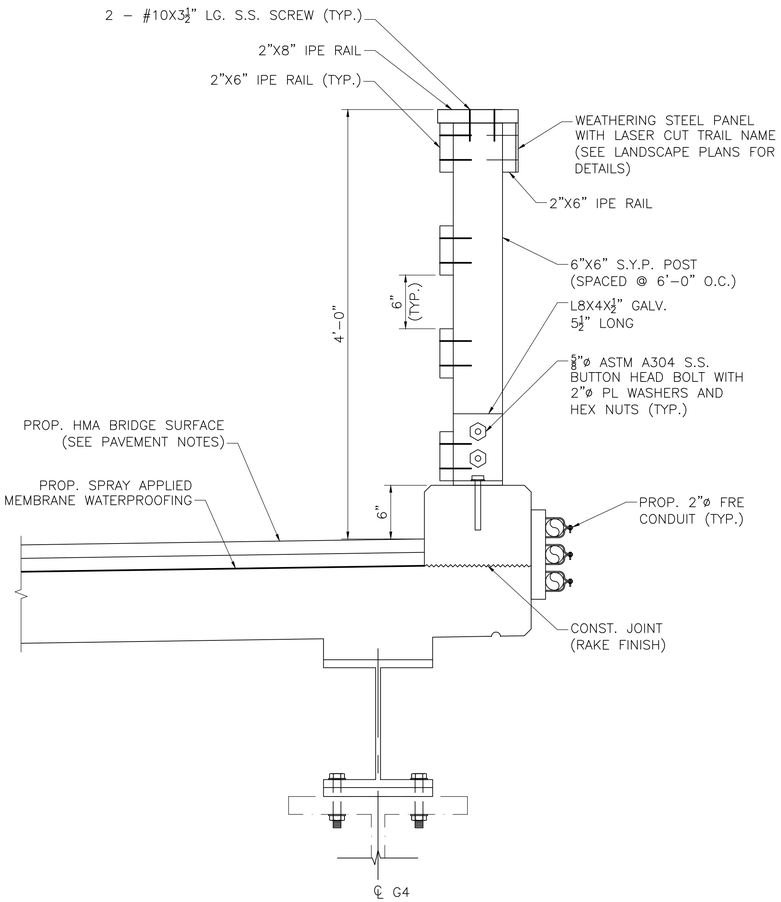

TRANSVERSE SECTION AT EAST SIDE, WEST SIDE SIMILAR

SCALE: 1½" = 1'–0"

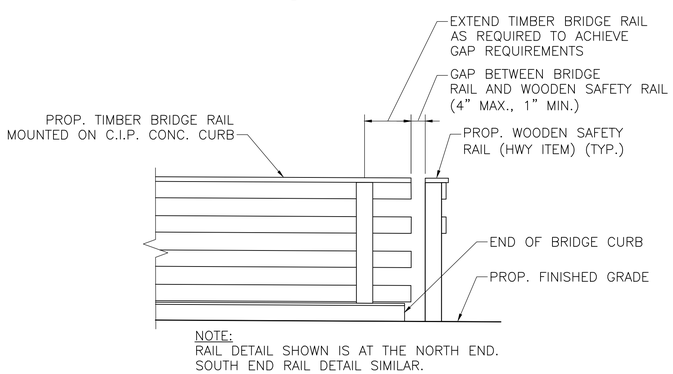

NOTE:
RAIL DETAIL SHOWN IS AT THE NORTH END.
SOUTH END RAIL DETAIL SIMILAR.

RAIL DETAIL

SCALE: ½"=1'–0"

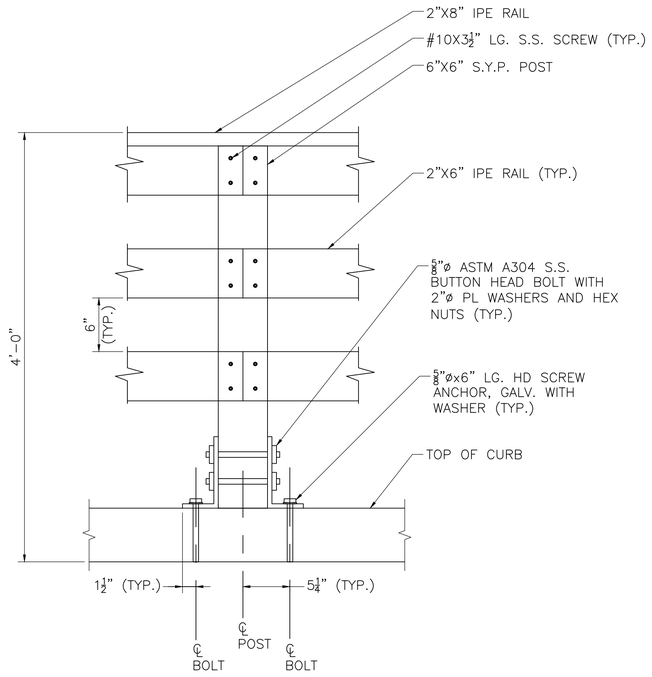

NOTE:
BOTTOM RAIL NOT SHOWN FOR CLARITY

RAIL TO POST CONNECTION

SCALE: 1½" = 1'–0"

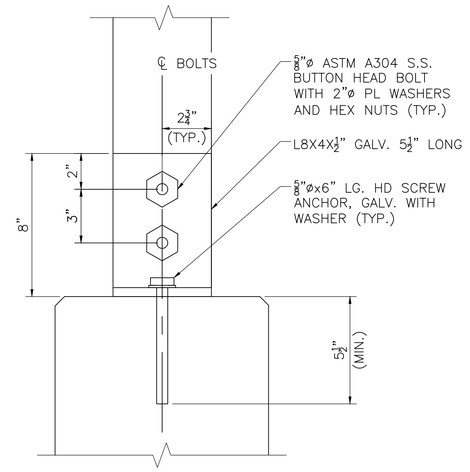

POST TO CURB CONNECTION

SCALE: 3" = 1'–0"

SEP. 7, 2024	ISSUED FOR CONSTRUCTION
DATE	DESCRIPTION
THIS SHEET IS APPROVED FOR CONSTRUCTION BY MASSDOT AUTHORIZED SIGNATORY:	STATE BRIDGE ENGINEER
USE ONLY PRINTS OF LATEST DATE	

608930_BR4-7(L04045).DWG Plotted on 5-Sep-2024 10:08 PM
07-September-2024
Fourth Structural Submittal (S4)

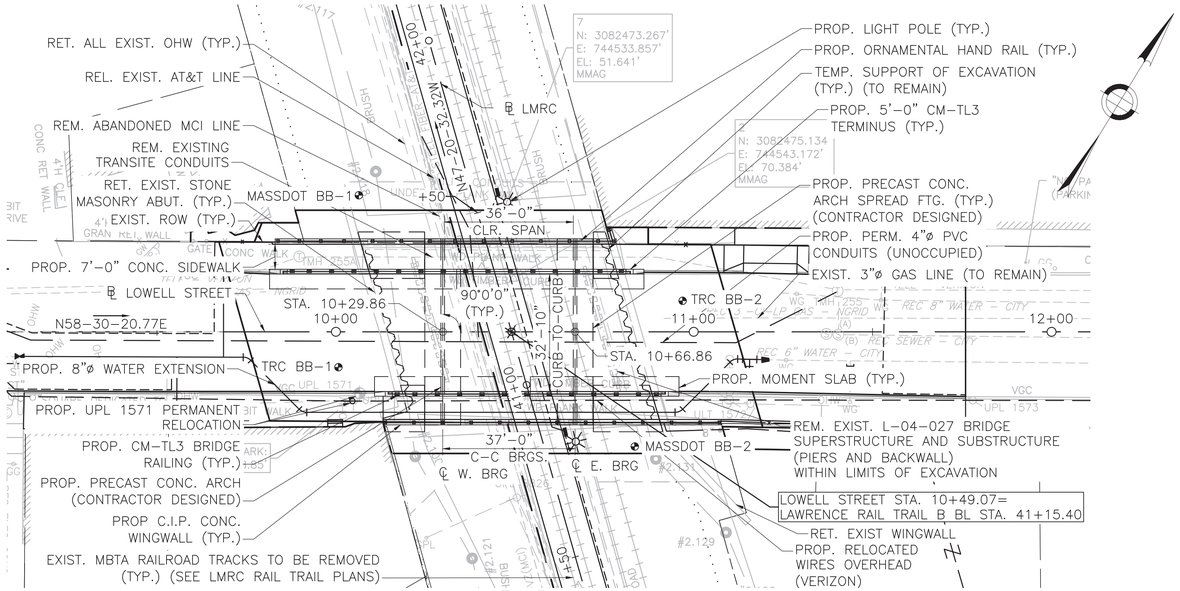

KEY PLAN
SCALE: 1"=20'

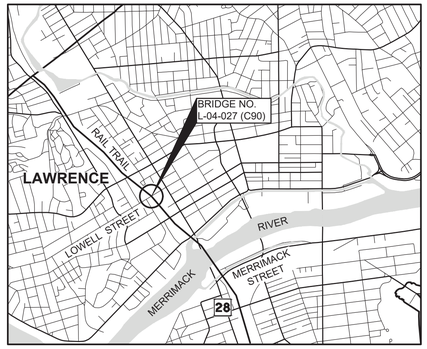

LOCUS MAP
SCALE: 1"=2000'

LAWRENCE
LOWELL STREET

STATE	FED. AID PROJ. NO.	SHEET NO.	TOTAL SHEETS
MA	CMQ-003S(733)X	159	245
	PROJECT FILE NO. 608930		

KEY PLAN, PROFILES, LOCUS, & INDEX

INDEX OF SHEETS

SHEET NUMBER	SHEET TITLE
1	KEY PLAN, PROFILES, LOCUS, & INDEX
2	GENERAL NOTES
3	BORING LOGS (1 OF 4)
4	BORING LOGS (2 OF 4)
5	BORING LOGS (3 OF 4)
6	BORING LOGS (4 OF 4)
7	PLAN AND ELEVATION
8	DEMOLITION DETAILS
9	WINGWALL DETAILS (1 OF 2)
10	WINGWALL DETAILS (2 OF 2)
11	SUPERSTRUCTURE DETAILS
12	MISCELLANEOUS DETAILS
13	CM-TL3 RAILING DETAILS
14	CM-TL3 TERMINUS DETAILS

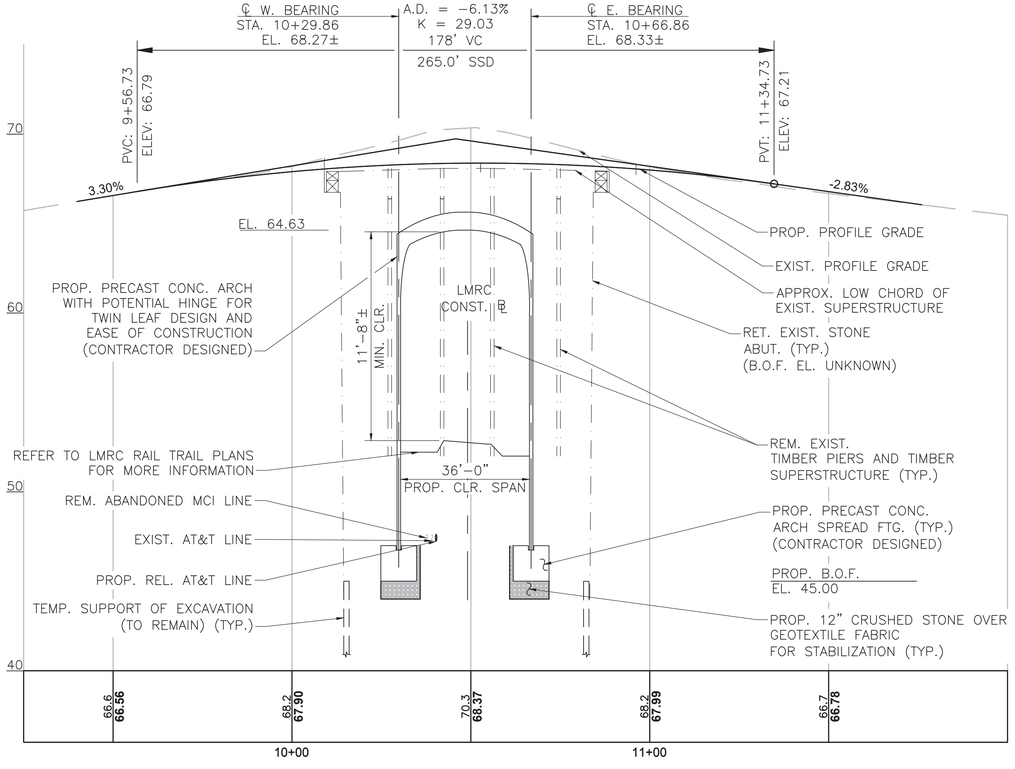

LOWELL STREET PROFILE
HORIZONTAL SCALE: 1"=20'
VERTICAL SCALE: 1"=4'

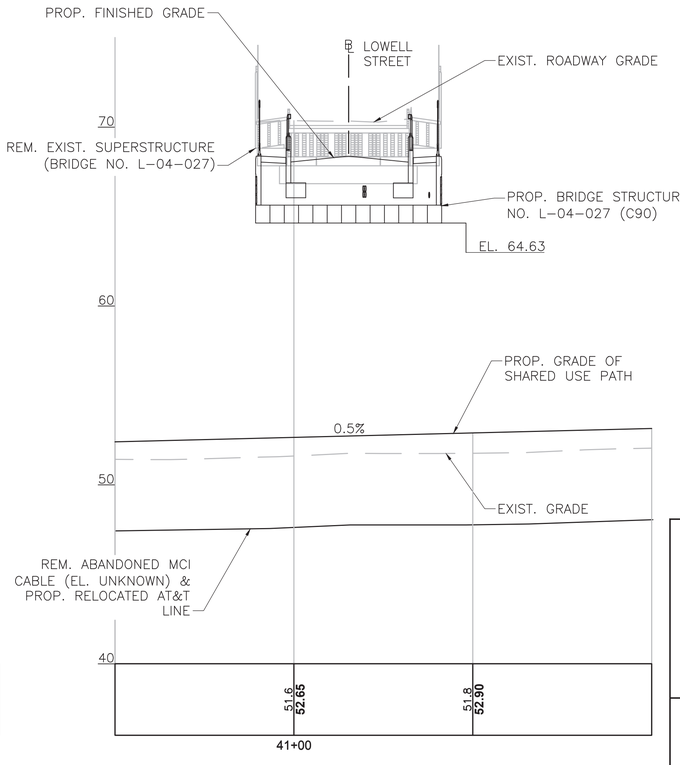

LMRC RAIL TRAIL PROFILE
HORIZONTAL SCALE: 1"=20'
VERTICAL SCALE: 1"=4'

COMMONWEALTH OF MASSACHUSETTS
JODY P. TRUNFIO
STRUCTURAL
No. 46075
PROFESSIONAL ENGINEER

Jody P. Trunfio Digitally signed by Jody P. Trunfio Date: 2024.09.18 16:20:43 -04'00'

The Engineering Corp
282 Merrimack Street, Second Floor
Lawrence, MA 01843
978-794-1792

SEP. 7, 2024 | ISSUED FOR CONSTRUCTION

MassDOT Massachusetts Department of Transportation Highway Division

PROPOSED BRIDGE

LAWRENCE

LOWELL STREET
OVER LMRC RAIL TRAIL

MASSACHUSETTS DEPARTMENT OF TRANSPORTATION
HIGHWAY DIVISION
10 PARK PLAZA BOSTON, MASS

Alexander K. Bardow, P.E. Digitally signed by Alexander K. Bardow, P.E. Date: 2024.09.20 09:35:27 -04'00'
STATE BRIDGE ENGINEER

Carrie Lavallee, P.E. Digitally signed by Carrie Lavallee, P.E. Date: 2024.09.23 16:59:08 -04'00'
CHIEF ENGINEER

608930_BR1 (L04027).DWG Plotted on 5-Sep-2024 9:27 PM

07-September-2024 Fourth Structrual Submittal (S4)

LAWRENCE
LOWELL STREET

STATE	FED. AID PROJ. NO.	SHEET NO.	TOTAL SHEETS
MA	CMQ-003S(733)X	160	245
	PROJECT FILE NO. 608930		

GENERAL NOTES

DESIGN:

IN ACCORDANCE WITH THE 2020 AASHTO LRFD BRIDGE DESIGN SPECIFICATIONS FOR HL-93 LOADING.

ALL WORK UNDER THIS CONTRACT SHALL BE DONE IN CONFORMANCE WITH THE 2024 STANDARD SPECIFICATIONS FOR HIGHWAYS AND BRIDGES, THE 2017 CONSTRUCTION STANDARD DETAILS, THE TRAFFIC MANAGEMENT PLANS AND DETAIL DRAWINGS, MASSDOT WORK ZONE SAFETY TEMPORARY TRAFFIC CONTROL, THE 1990 STANDARD DRAWINGS FOR SIGNS AND SUPPORTS; THE 2015 OVERHEAD SIGNAL STRUCTURE AND FOUNDATION STANDARD DRAWINGS, THE 2009 MANUAL ON UNIFORM TRAFFIC CONTROL DEVICES (MUTCD) WITH MASSACHUSETTS AMENDMENTS; THE 1968 STANDARD DRAWINGS FOR TRAFFIC SIGNALS AND HIGHWAY LIGHTING; THE AMERICAN STANDARD FOR NURSERY STOCK; THE PLANS AND SPECIAL PROVISIONS.

SURVEY BENCHMARKS:

BENCHMARK 1: MMAG (POINT #7)
N: 3082473.267'
E: 744533.857'
ELEVATION= 51.641'

BENCHMARK 2: MMAG (POINT #2)
N: 3082475.134'
E: 744543.172'
ELEVATION= 70.384'

ELEVATIONS ARE BASED ON THE NORTH AMERICAN VERTICAL DATUM (NAVD) OF 1988.

DATE:
TO BE PLACED ON THE INSIDE FACE OF THE SOUTHEAST AND NORTHWEST CM-TL3 END TERMINUS'. THE DATE USED SHALL BE THE LATEST YEAR OF CONTRACT COMPLETION AS OF THE DATE THE FIRST CM-TL3 END TERMINUS IS CONSTRUCTED. BOTH CM-TL3 END TERMINUS' SHALL FEATURE THE SAME DATE.

SCALES:
SCALES NOTED ON THE PLANS ARE NOT APPLICABLE TO REDUCED SIZE PRINTS. DIVIDE SCALES BY 2 FOR HALF-SIZE PRINTS (A3).

FOUNDATIONS:
FOUNDATIONS MAY BE ALTERED, IF NECESSARY TO SUIT CONDITIONS ENCOUNTERED DURING CONSTRUCTION WITH THE APPROVAL OF THE ENGINEER.

REFER TO THE GEOTECHNICAL REPORT PREPARED BY TRC ENVIRONMENTAL DATED SEPTEMBER 2020, WITH JANUARY 2023 REVISIONS.

UNSUITABLE MATERIAL:
ALL UNSUITABLE MATERIAL SHALL BE REMOVED WITHIN THE LIMITS OF THE FOUNDATIONS OF THE STRUCTURE, AS DIRECTED BY THE ENGINEER.

ANCHOR BOLTS:
ALL ANCHOR BOLTS SHALL BE SET BY TEMPLATE BEFORE CONCRETE IS PLACED.

CONCRETE:
PRECAST ELEMENTS:

THE FABRICATOR IS RESPONSIBLE FOR THE DESIGN AND INSTALLATION OF LIFT HOOKS FOR ALL PRECAST ELEMENTS. UNDER NO CIRCUMSTANCES WILL THE REBAR ELEMENTS SHOWN ON THE PLAN BE USED TO LIFT THE PRECAST ELEMENTS. FOR ADDITIONAL REQUIREMENTS, REFER TO THE "PRECAST CONCRETE ELEMENTS" PORTION OF THE ITEM 995.1 IN THE SPECIAL PROVISIONS.

PRECAST CONCRETE:
5000 PSI, HP CEMENT CONCRETE: ARCH, ARCH FOOTINGS, AND HEADWALLS

CAST-IN-PLACE CONCRETE:
5000 PSI, ¾", 585 HP CEMENT CONCRETE: WINGWALL FOOTINGS, AND WINGWALL STEMS

4000 PSI, ¾", 610 CEMENT CONCRETE: SIDEWALKS

5000 PSI, ¾", 685 HP CEMENT CONCRETE: CM-TL3 PEDESTALS AND MOMENT SLAB, AND CM-TL3 TERMINUS

REINFORCEMENT:
REINFORCING STEEL SHALL BE EPOXY COATED AND CONFORM TO THE REQUIREMENTS OF AASHTO M 31 GRADE 60. UNLESS OTHERWISE NOTED ON THE CONSTRUCTION DRAWINGS, ALL BARS SHALL BE LAPPED AS FOLLOWS:

MODIFICATION CONDITION:	#4 BARS	#5 BARS	#6 BARS
1. NONE	16"	19"	23"
2. 12" OF CONCRETE BELOW BAR	20"	25"	30"
3. EPOXY COATED BARS, COVER < 3db, OR CLEAR SPACING < 6db	23"	29"	34"
4. COATED BARS, ALL OTHER CASES	18"	23"	27"
5. CONDITION 2. AND 3.	26"	32"	39"
6. CONDITION 2. AND 4.	24"	30"	36"

ALL OTHER BARS SHALL BE LAPPED AS SHOWN ON THE CONSTRUCTION DRAWINGS.

MEMBRANE WATERPROOFING:
ALL MEMBRANE WATERPROOFING USED SHALL BE MEMBRANE WATERPROOFING FOR BRIDGE DECKS – SPRAY APPLIED.

TRAFFIC:
THE BRIDGE WILL BE CLOSED TO VEHICULAR TRAFFIC DURING ALL PHASES OF DEMOLITION AND CONSTRUCTION. VEHICULAR TRAFFIC WILL BE DETOURED AS SHOWN ON THE PLANS.

UTILITIES:
DURING CONSTRUCTION, THE CONTRACTOR SHALL LOCATE AND PROTECT FROM DAMAGE ALL UTILITIES THAT ARE TO REMAIN IN PLACE. UTILITY POLE RELOCATIONS SHALL BE CLOSELY COORDINATED WITH THE UTILITY OWNERS AND THE ENGINEER.

PAVEMENT MARKINGS:
ALL PAVEMENT MARKINGS SHALL BE THERMOPLASTIC AND SHALL SMOOTHLY TRANSITION INTO THE EXISTING PAVEMENT MARKINGS AT THE PROJECT LIMITS. A MINOR (NEGLIGIBLE) VARIATION IN THE SPECIFIED LANE WIDTHS IS PERMISSIBLE IN ORDER TO MAKE A SMOOTH TRANSITION FROM PROPOSED TO EXISTING PAVEMENT MARKINGS.

CONSTRUCTION SURVEY AND MONITORING
FOR PRE- AND POST-CONSTRUCTION SURVEY AND VIBRATION MONITORING REQUIREMENTS , SEE SPECIAL PROVISIONS ITEM NO. 100.91.

ESTIMATED QUANTITIES
(NOT GUARANTEED)

ITEM DESCRIPTION	QUANTITY	UNITS
PRE- AND POST- CONSTRUCTION SURVEY AND VIBRATION MONITORING.....	1	LS
DEMOLITION OF BRIDGE NO. L-04-027 (C90).....	1	LS
BRIDGE EXCAVATION.....	587	CY
GRAVEL BORROW FOR BACKFILLING STRUCTURES AND PIPES.....	1400	CY
CRUSHED STONE FOR BRIDGE FOUNDATIONS.....	95	TON
DENSE GRADED CRUSHED STONE FOR SUB-BASE.....	170	TON
GEOTEXTILE FABRIC FOR STABILIZATION.....	225	SY
4000 PSI, ¾", 610 CEMENT CONCRETE.....	70	CY
STEEL REINFORCEMENT FOR STRUCTURES – EPOXY COATED.....	6000	LB
TEMPORARY SUPPORT OF EXCAVATION BRIDGE NO. L-04-027 (C90).....	1	LS
BRIDGE STRUCTURE, BRIDGE NO. L-04-027 (C90).....	1	LS

TRAFFIC DATA

	ROADWAY OVER	ROADWAY UNDER
DESIGN YEAR	2041	N/A
AVERAGE DAILY TRAFFIC – PRESENT	6160 VPD	N/A
AVERAGE DAILY TRAFFIC – DESIGN YEAR	9065 VPD	N/A
DESIGN HOURLY VOLUME	745	N/A
DIRECTIONAL DISTRIBUTION	60.6%	N/A
TRUCK PERCENTAGE – AVERAGE DAY	2.0%	N/A
TRUCK PERCENTAGE – PEAK HOUR	2.0%	N/A
DESIGN SPEED	35 MPH	N/A
DIRECTIONAL DESIGN HOURLY VOLUME	450	N/A

SEISMIC DESIGN CRITERIA

DESIGN RETURN PERIOD:	1000
DESIGN SPECTRA	
As	0.142
SDs	0.278
SD1	0.101
SITE CLASS	D
SEISMIC DESIGN CATEGORY (SDC)	A

SEP. 7, 2024	ISSUED FOR CONSTRUCTION
DATE	DESCRIPTION

THIS SHEET IS APPROVED FOR CONSTRUCTION BY MASSDOT
AUTHORIZED SIGNATORY: STATE BRIDGE ENGINEER
USE ONLY PRINTS OF LATEST DATE

608930_BR2-6 (L04027).DWG Plotted on 5-Sep-2024 9:27 PM
07-September-2024 Fourth Structrual Submittal (S4)

BORING 1 (TRC BB–1)

EXIST. GROUND SURFACE EL. = 68.0

EL. = 60.0

OBS. GROUNDWATER (1/15/19) EL. = 50.0

PROP. BOT. OF ARCH & WEST WINGWALL FTGS. EL. = 45.0

SOIL BORING LOG — **BORING NO. TRC - BB - 1** — Page 1 of 5

Facility/Project Name:	Boring Location:	Surface Elev. (ft):	Total Depth (ft bgs.)	Borehole Dia. (in):
Lowell Street Bridge -Lawrence, MA	N: 3082429.6 E: 744512.8	68.0	114.0	4.25

Drilling Firm:	Drilling Method:	Personnel:	Date Started:	Date Completed:	Water Depth (ft bgs):
GeoSearch Drilling	HSA / Wash and Drive with 3" Casing SPT w/ Automatic Hammer	Logged By - S. Sullivan Driller - R. Dean	10/9/18	1/15/19	~18

SAMPLE NUMBER AND TYPE	RECOVERY (%)	BLOW COUNTS	DEPTH IN FEET	LITHOLOGIC DESCRIPTION	USCS	GRAPHIC LOG	N VALUE (BLOWS)	DENSITY (PCF)	COMPRESSIVE STRENGTH (TSF)	MOISTURE CONTENT (%)	LIQUID LIMIT	PLASTICITY INDEX	P 200 (%)	COMMENTS
			0	Bituminous Pavement, ~ 1-foot thick										
SS 1	50	2 4 4 5		brown, loose, fine to coarse **SAND**, trace gravel, dry, fill										
SS 2	25	11 7 4 5		top 3 inches: gray, medium dense **CONCRETE**, dry, fill brown, medium dense, fine to coarse **SAND**, some gravel, dry, fill										
SS 3	34	1 1 1 1	5	brown, very loose, fine to coarse **SAND**, some gravel, moist, fill brown, very loose, fine **SAND**, dry, fill										
SS 4	25	3 1 1 1		brown, very loose, fine **SAND**, some gravel, dry, fill						6.2			14.9	
SS 5	8	3 1 2 1		brown, very loose, fine **SAND**, trace gravel, dry, fill										
SS 6	42	4 3 8 3	10	brown, medium dense, fine **SAND**, some gravel, dry, fill										
				cobbles ~13 to ~15 ft bgs, fill										
SS 7	34	2 3 8 11	15	brown, medium dense, fine **SAND**, trace gravel, moist, fill brown, medium dense, fine to coarse **SAND**, some gravel, moist, fill										
SS 8	58	13 18 31 43		brown, medium dense, fine **SAND**, wet, fill brown, dense, fine **SAND AND SILT**, some gravel, trace weathered rock, wet, till						10.6			36.8	
			20											

GEOTECH LOG_LAWRENCE BRIDGE.GPJ - 8/11/20

Checked By:	Date:	Approved By:	Date:	Firm:
Z. Bauman	8/11/20			TRC 2 Liberty Square, 6th Floor, Boston, MA Boston, MA 02109 Fax

EL. = 40.0

EL. = 30.0

EL. = 20.0

SOIL BORING LOG — **BORING NO. TRC - BB - 1** — Page 2 of 5

SAMPLE NUMBER AND TYPE	RECOVERY (%)	BLOW COUNTS	DEPTH IN FEET	LITHOLOGIC DESCRIPTION	USCS	GRAPHIC LOG	N VALUE (BLOWS)	DENSITY (PCF)	COMPRESSIVE STRENGTH (TSF)	MOISTURE CONTENT (%)	LIQUID LIMIT	PLASTICITY INDEX	P 200 (%)	COMMENTS
SS 9	100	30 47 70 90	25	brown, very dense, fine **SAND**, some silt, trace gravel, dry, till			117			7.7			46.9	
RC 10	0	50/.5 - - -	30											Auger refusal at 28.5 ft bgs SPT Refusal at 29.0 ft bgs Core through boulder 28.5 to 29.5 ft bgs Drive casing to 34 ft bgs
SS 11	90	48 57 55 69	35	brown, very dense, fine **SAND AND SILT**, some gravel, dry			110							
SS 12	54	24 33 100/5	40	brown, very dense, coarse **SAND**, moist to wet			97							
SS 13	58	41 80 100/5 -	45	brown, very dense, fine **SAND**, trace gravel, some silt, moist			119							End of Boring at 46 ft bgs on 10/09/2018 Drive casing to 49 ft bgs and continue boring from 01/14/2019 to 01/15/2019; Drill open hole below 49 ft bgs
RC 14	100	100/4 - - -	50	light brown, very dense, fine **SAND**, trace gravel, some silt, wet										

GEOTECH LOG_LAWRENCE BRIDGE.GPJ - 8/11/20

BORING 1 (TRC BB–1) CONT.

EL. = 10.0

EL. = 00.0

EL. = −10.0

SOIL BORING LOG — **BORING NO. TRC - BB - 1** — Page 3 of 5

SAMPLE NUMBER AND TYPE	RECOVERY (%)	BLOW COUNTS	DEPTH IN FEET	LITHOLOGIC DESCRIPTION	USCS	GRAPHIC LOG	N VALUE (BLOWS)	DENSITY (PCF)	COMPRESSIVE STRENGTH (TSF)	MOISTURE CONTENT (%)	LIQUID LIMIT	PLASTICITY INDEX	P 200 (%)	COMMENTS
SS 15	92	33 47 58 59	55	light brown, very dense, coarse **SAND**, trace gravel, trace silt, moist			105							
SS 16	75	59 75 72 100/4	60	brown, very dense, fine **SAND**, trace gravel, moist			147							
SS 17	75	30 28 74 100/4	65	brown, very dense, fine **SAND**, some gravel, some silt, moist			102							
SS 18	13	100/3 - - -	70	brown to black, very dense, fine **SAND**, trace silt, moist										
SS 19	33	90 100/3 - -	75	light brown, very dense, fine **SAND**, trace gravel, some silt, moist			100							
SS 20	167	44 74 76	80	brown, very dense, fine **SAND**, moist			150							

GEOTECH LOG_LAWRENCE BRIDGE.GPJ - 8/11/20

EL. = −20.0

EL. = −30.0

EL. = −40.0

SOIL BORING LOG — **BORING NO. TRC - BB - 1** — Page 4 of 5

SAMPLE NUMBER AND TYPE	RECOVERY (%)	BLOW COUNTS	DEPTH IN FEET	LITHOLOGIC DESCRIPTION	USCS	GRAPHIC LOG	N VALUE (BLOWS)	DENSITY (PCF)	COMPRESSIVE STRENGTH (TSF)	MOISTURE CONTENT (%)	LIQUID LIMIT	PLASTICITY INDEX	P 200 (%)	COMMENTS
		100/4	85											
SS 22	88	46 70 78 87		brown, very dense, fine **SAND**, trace silt, moist			148							
SS 23	42	55 100/4 - -	90	brown, very dense, fine **SAND**, some gravel, trace silt, moist			100							
SS 24	46	50 100/5 - -	95	brown, very dense, fine **SAND**, trace silt, moist			100							
SS 25	42	87 100/1 - -	100	brown, very dense, fine **SAND**, some silt, trace clay, moist			100							
														Roller bit to 104 ft bgs and start coring
RC 26	100		105	moderately hard, fresh, slightly to moderately fractured, gray to dark gray, fine to very fine grained, **QUARTZITE**, thin horizontal bedded, shallow dipping fractures; RQD = 52%										Rock coring with NQ-2 core barrel 1.2 minutes / foot 1.3 minutes / foot 2.2 minutes / foot 2.2 minutes / foot 2.1 minutes / foot

GEOTECH LOG_LAWRENCE BRIDGE.GPJ - 8/11/20

BORING 1 (TRC BB–1) CONT.

EL. = −50.0

EL. = −30.0

SOIL BORING LOG — **BORING NO. TRC - BB - 1** — Page 5 of 5

SAMPLE NUMBER AND TYPE	RECOVERY (%)	BLOW COUNTS	DEPTH IN FEET	LITHOLOGIC DESCRIPTION	USCS	GRAPHIC LOG	N VALUE (BLOWS)	DENSITY (PCF)	COMPRESSIVE STRENGTH (TSF)	MOISTURE CONTENT (%)	LIQUID LIMIT	PLASTICITY INDEX	P 200 (%)	COMMENTS
RC 25	100		110	hard, fresh, slightly to moderately fractured, gray to dark gray, very fine grained, **META SILTSTONE**, thin horizontal bedded, shallow dipping fractures; RQD = 75%										1.8 minutes / foot 3.6 minutes / foot 2.8 minutes / foot 2.6 minutes / foot 3.1 minutes / foot
			115	BORING TERMINATED AT 114' BGS.										
			120											
			125											
			130											
			135											

GEOTECH LOG_LAWRENCE BRIDGE.GPJ - 8/11/20

BORING NOTES:

1. LOCATION OF BORINGS ARE SHOWN ON THE PLANS THUS: ⊕
2. BORINGS ARE TAKEN FOR THE PURPOSE OF DESIGN AND SHOW CONDITIONS AT BORING POINTS ONLY, BUT DO NOT NECESSARILY SHOW THE NATURE OF THE MATERIALS TO BE ENCOUNTERED DURING CONSTRUCTION.
3. WATER LEVELS SHOWN ON THE BORING LOGS WERE OBSERVED AT THE TIME OF TAKING BORINGS AND DO NOT NECESSARILY SHOW THE TRUE GROUND WATER LEVEL.
4. FIGURES IN COLUMNS INDICATE NUMBER OF BLOWS REQUIRED TO DRIVE A 1 3/8" I.D. SPLIT SPOON SAMPLER 6" USING A 140 POUND WEIGHT FALLING 30".
5. BORING SAMPLES ARE STORED AT A STORAGE FACILITY LOCATED ON ROUTE 114 (219 WINTHROP AVE.) IN LAWRENCE, MA. THE CONTRACTOR MAY EXAMINE THE SOIL AND ROCK SAMPLES BY CONTACTING THE MASSDOT GEOTECHNICAL SECTION AT 10 PARK PLAZA, BOSTON, MA.
6. BORINGS TRC BB–1 AND TRC BB–2 WERE BEGUN IN OCTOBER 2018 AND FINISHED IN JANUARY 2019 TO OBTAIN BEDROCK CORES.
7. BORINGS TRC BB–1 AND TRC BB–2 WERE MADE BY GEOSEARCH DRILLING, 11 CHOCKSETT ROAD, STERLING, MA 01564.
8. BORINGS MASSDOT BB–1 AND MASSDOT BB–2 WERE COMPLETED IN JUNE 2012.
9. BORINGS MASSDOT BB–1 AND MASSDOT BB–2 WERE MADE BY NEW HAMPSHIRE BORING, INC. P.O. BOX 165 DERRY, NH 03038.
10. THE NORTH AMERICAN VERTICAL DATUM (NAVD) OF 1988 IS USED THROUGHOUT.

LAWRENCE
LOWELL STREET

STATE	FED. AID PROJ. NO.	SHEET NO.	TOTAL SHEETS
MA	CMQ-003S(733)X	161	245
	PROJECT FILE NO.	608930	

BORING LOGS (1 OF 4)

SEP. 7, 2024	ISSUED FOR CONSTRUCTION
DATE	DESCRIPTION

THIS SHEET IS APPROVED FOR CONSTRUCTION BY MASSDOT
AUTHORIZED SIGNATORY: STATE BRIDGE ENGINEER

USE ONLY PRINTS OF LATEST DATE

608930_BR2-6 (L04027).DWG Plotted on 5-Sep-2024 9:28 PM

07-September-2024 Fourth Structual Submittal (S4)

BORING 2 (TRC BB–2)

EXIST. GROUND SURFACE EL. = 68.0

EL. = 60.0

EL. = 50.0

OBS. GROUNDWATER (1/17/19) EL. = 48.0

PROP. BOT. OF ARCH & EAST WINGWALL FTGS. EL. = 45.0

SOIL BORING LOG — **BORING NO. TRC - BB - 2** — Page 1 of 4

Facility/Project Name	Boring Location:	Surface Elev. (ft):	Total Depth (ft bgs):	Borehole Dia. (in):
Lowell Street Bridge - Lawrence, MA	N: 3082494.4 E: 744587.1	68.0	97.0	

Drilling Firm:	Drilling Method:	Personnel:	Date Started:	Date Completed:	Water Depth (ft bgs):
GeoSearch Drilling	HSA / Wash and Drive with 3" Casing SPT w/ Automatic Hammer	Logged By - S. Sullivan Driller - R. Dean	10/10/18	1/17/19	~20

SAMPLE NUMBER AND TYPE	RECOVERY (%)	BLOW COUNTS	DEPTH IN FEET	LITHOLOGIC DESCRIPTION	USCS	GRAPHIC LOG	N VALUE (BLOWS)	DENSITY (PCF)	COMPRESSIVE STRENGTH (TSF)	MOISTURE CONTENT (%)	LIQUID LIMIT	PLASTICITY INDEX	P 200 (%)	COMMENTS
1 SS	90	70 32 15 12		Bituminous Pavement: ~ 1-foot thick brown, dense, coarse **SAND**, some gravel, dry (fill)										
2 SS	54	11 10 7 5		brown, dense, fine to coarse **SAND**, trace gravel, dry (fill)										
3 SS	63	3 3 4 10	5	brown, medium dense, fine to coarse **SAND**, trace gravel (fill) brown, loose, fine **SAND**, trace gravel, dry, (fill)										
4 SS	29	5 6 5 6		gray, medium dense, fine to coarse **SAND**, some gravel, dry, (fill)						8.7			39.3	
5 SS	46	6 6 7 8		brown, medium dense, fine **SAND**, some gravel, dry, (fill)										
6 SS	46	- 41 19 15	10	brown, very dense, fine to coarse **SAND**, trace gravel, trace silt, moist			50/6"							
7 SS	92	14 19 18 17		brown, dense, fine to coarse **SAND**, some gravel, trace silt, wet brown, dense, fine **SAND**, trace gravel, trace silt, moist						10.9			40.8	
8 SS	75	15 18 22 42	20	brown, dense, fine to coarse **SILT**, trace gravel, trace sand, moist, (till) brown, dense, coarse **SAND AND SILT**, trace gravel, moist, (till)										

Checked By:	Date:	Approved By:	Date:	Firm:
Z. Bauman	8/11/20			TRC 2 Liberty Square, 6th Floor, Boston, MA Boston, MA 02109 Fax

GEOTECH LOG_LAWRENCE BRIDGE.GPJ 8/11/20

EL. = 40.0

EL. = 30.0

EL. = 20.0

SOIL BORING LOG — **BORING NO. TRC - BB - 2** — Page 2 of 4

SAMPLE NUMBER AND TYPE	RECOVERY (%)	BLOW COUNTS	DEPTH IN FEET	LITHOLOGIC DESCRIPTION	USCS	GRAPHIC LOG	N VALUE (BLOWS)	DENSITY (PCF)	COMPRESSIVE STRENGTH (TSF)	MOISTURE CONTENT (%)	LIQUID LIMIT	PLASTICITY INDEX	P 200 (%)	COMMENTS
9 SS	50	35 75 35 72	25	brown, very dense **SILT**, some gravel, moist, (till) brown, very dense **GRAVEL**, some coarse sand, trace silt, wet, (till)			100+			11.8			31.2	
10 SS	79	28 49 51 71	30	brown, very dense **SILT**, some gravel, trace sand, moist, (till)			100+							
11 SS	33	28 100/1.5 - -	35	brown, very dense **SILT**, trace gravel, moist, (till)			100+							
12 SS	71	18 31 35 35	40	brown, very dense, coarse **SAND**, moist			66							
13 SS	63	61 100 100/4.5 -	45	gray, very dense **GRAVEL**, wet brown, very dense, coarse **SAND**, trace gravel, some silt, moist			200+							
14 SS	54	46 62 100/5.5 -	50	brown, very dense, fine **SAND**, trace silt, moist			100+							

GEOTECH LOG_LAWRENCE BRIDGE.GPJ 8/11/20

BORING 2 (TRC BB–2) CONT.

EL. = 10.0

EL. = 00.0

EL. = −10.0

SOIL BORING LOG — **BORING NO. TRC - BB - 2** — Page 3 of 4

SAMPLE NUMBER AND TYPE	RECOVERY (%)	BLOW COUNTS	DEPTH IN FEET	LITHOLOGIC DESCRIPTION	USCS	GRAPHIC LOG	N VALUE (BLOWS)	DENSITY (PCF)	COMPRESSIVE STRENGTH (TSF)	MOISTURE CONTENT (%)	LIQUID LIMIT	PLASTICITY INDEX	P 200 (%)	COMMENTS
15 SS	42	62 100 100/4 -	55	brown, very dense, fine **SAND**, trace silt, moist			200+							
16 SS	63	44 66 100/5.5 -	60	brown, very dense, fine **SAND**, trace silt, moist brown, very dense, fine **SILT**, trace gravel, moist			100+							
17 SS	33	78 100/4 - -	65	brown, very dense, fine **SAND**, trace silt, moist			100+							
18 SS	38	66 100/4 - -	70	brown, very dense, fine **SAND**, trace silt, moist, (till)			100+							
19 SS	33	100 100/2 - -	75	gray, very dense, fine **SILT**, some gravel, some sand, moist, (till)			100+							
20 SS	58	35 85 100/4 -	80	gray, very dense **SILT**, trace gravel, some fine sand, moist			100+							

GEOTECH LOG_LAWRENCE BRIDGE.GPJ 8/11/20

EL. = −20.0

EL. = −30.0

EL. = −40.0

SOIL BORING LOG — **BORING NO. TRC - BB - 2** — Page 4 of 4

SAMPLE NUMBER AND TYPE	RECOVERY (%)	BLOW COUNTS	DEPTH IN FEET	LITHOLOGIC DESCRIPTION	USCS	GRAPHIC LOG	N VALUE (BLOWS)	DENSITY (PCF)	COMPRESSIVE STRENGTH (TSF)	MOISTURE CONTENT (%)	LIQUID LIMIT	PLASTICITY INDEX	P 200 (%)	COMMENTS
			85											Rock coring with NQ-2 core barrel
21 RC	75		90	hard, fresh, slightly to moderately fractured, gray to dark gray, fine to very fine grained, **META SILTSTONE**, thin to medium bedding, moderately dipping joints; RQD = 45%										0.8 minutes / foot 2.5 minutes / foot 2.9 minutes / foot 2.1 minutes / foot
22 RC	98		95	hard, fresh, slightly to moderately fractured, gray to dark gray, very fine grained, **META SILTSTONE**, thin to medium bedding, moderately dipping joints; RQD = 48%				168	1200					2.9 minutes / foot 2.1 minutes / foot 2.1 minutes / foot 2.0 minutes / foot 3.5 minutes / foot
			100	BORING TERMINATED AT 97' BGS.										
			105											

GEOTECH LOG_LAWRENCE BRIDGE.GPJ 8/11/20

LAWRENCE
LOWELL STREET

STATE	FED. AID PROJ. NO.	SHEET NO.	TOTAL SHEETS
MA	CMQ-003S(733)X	162	245
	PROJECT FILE NO.	608930	

BORING LOGS (2 OF 4)

BORING NOTES:

1. SEE BORING NOTES ON SHEET 3.

SEP. 7, 2024	ISSUED FOR CONSTRUCTION
DATE	DESCRIPTION

THIS SHEET IS APPROVED FOR CONSTRUCTION BY MASSDOT AUTHORIZED SIGNATORY: STATE BRIDGE ENGINEER

USE ONLY PRINTS OF LATEST DATE

SHEET 4 OF 14 SHEETS BRIDGE NO. L–04–027 (C90)

608930_BR2-6 (L04027).DWG Plotted on 5-Sep-2024 9:28 PM

Fourth Structrual Submittal (S4) 07-September-2024

LAWRENCE
LOWELL STREET

STATE	FED. AID PROJ. NO.	SHEET NO.	TOTAL SHEETS
MA	CMQ-003S(733)X	163	245
	PROJECT FILE NO. 608930		

BORING LOGS (3 OF 4)

BORING 3 (MASSDOT BB–1)

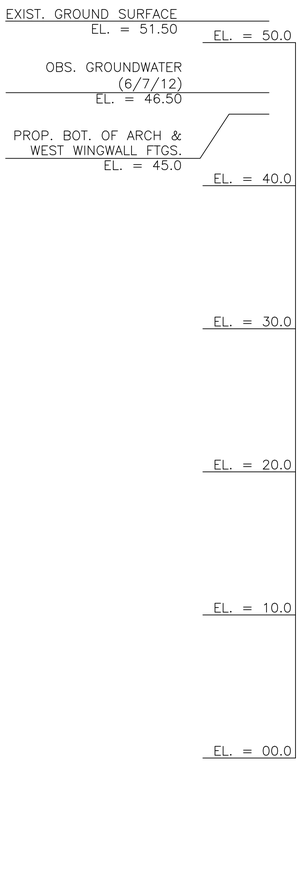

massDOT Highway

NEW HAMPSHIRE BORING, INC.
P.O. Box 165
Derry, NH 03038

Phone: (603)437-1610
Fax: (603) 437-0034
E Mail: nhb@nhboring.com

Boring No. BB-1
Scale 1" = 5'

City/Town: Lawrence	Bridge: L-04-027	Project File No: 604839	Contract No: 57734
Project: Lowell Street over the B&M Railroad		Date & Time Started: 06-04-12 12:00 pm	Total Hours: 26
Groundwater Depth: 5'	Date & Time: 06-07-12 1:00 pm	Date & Time Completed: 06-07-12 1:30 pm	
Coordinates: N 3082472.43 E 744505.92	Driller's Name: Michael Misiaszek	Helper's Name: Shawn Burto	
Ground Elevation: 51.50	Inspector's Name: Cory St. Sauveur	Inspector's Company: Massachusetts Department of Transportation	

Sample Number	Depth Range (Feet)	Blow Counts per 6 Inches Coring Times Minute Per Foot				Recovery Inches	Field Description	Strata Changes
S-1	0' - 2'	4	3	4	7	9"	Wet, loose, dark brown, FINE TO COARSE SAND, some organic silt.	
S-2	4' - 6'	9	11	15	19	15"	Wet, medium dense, gray, FINE TO COARSE SAND, some inorganic silt.	
S-3	9' - 11'	40	40	40	50	20"	Wet, very dense, gray, FINE TO COARSE SAND, some inorganic silt.	
S-4	14' - 15'9"	12	21	35	85/3"	12"	Wet, very dense, gray, FINE TO COARSE SAND, some inorganic silt.	
S-5	19' - 21'	27	31	30	31	17"	Wet, very dense, brown, FINE TO COARSE SAND, some inorganic silt, trace fine gravel.	
S-6	24' - 24'7"	70	50/1"			4"	Wet, very dense, brown, FINE TO COARSE SAND, some inorganic silt.	
S-7	29' - 29'6"	106	14/0"			5"	Wet, very dense, brown, FINE TO COARSE SAND, some inorganic silt.	
S-8	34' - 34'5"	120/5"				5"	Wet, very dense, brown, FINE TO COARSE SAND, some inorganic silt.	
S-9	39' - 39'11"	48	72/5""			7"	Wet, very dense, brown, FINE SAND, some inorganic silt.	
S-10	44' - 45'	55	71			10"	Wet, very dense, brown, FINE SAND, some inorganic silt.	
S-11	49' - 49'7"	65	55/1"			5"	Wet, very dense, brown, FINE SAND, some inorganic silt.	
S-12	54' - 54'10"	33	87/4"			6"	Wet, very dense, brown, FINE SAND, some inorganic silt.	
S-13	59' - 59'5"	120/5"				3"	Wet, very dense, brown, FINE TO COARSE SAND, some inorganic silt, trace fine gravel.	

EL. = 10.0
EL. = 00.0
EL. = −10.0
EL. = −20.0
EL. = −30.0
EL. = −40.0

BORING 3 (MASSDOT BB–1) CONT.

S-10	44' - 45'	55	71	10"	Wet, very dense, brown, FINE SAND, some inorganic silt.	
S-11	49' - 49'7"	65	55/1"	5"	Wet, very dense, brown, FINE SAND, some inorganic silt.	
S-12	54' - 54'10"	33	87/4"	6"	Wet, very dense, brown, FINE SAND, some inorganic silt.	
S-13	59' - 59'5"	120/5"		3"	Wet, very dense, brown, FINE TO COARSE SAND, some inorganic silt, trace fine gravel.	
S-14	64' - 64'10"	37	83/4"	7"	Wet, very dense, brown, FINE SAND, some inorganic silt.	
S-15	69' - 69'7"	95	25/1"	5"	Wet, very dense, brown, FINE SAND, some inorganic silt.	
S-16	74' - 74'10"	52	68/4"	7"	Wet, very dense, brown, FINE SAND, some inorganic silt.	
S-17	79' - 79'6"	123		5"	Wet, very dense, brown, FINE SAND, some inorganic silt.	
					Top of BEDROCK at 83'	83'
C-1	84' - 89'	7	9 12 12 13	60"	Roller bit to 84' and began coring. Hard, gray, slightly weathered, some fratures, APHANITIC SCHIST. Percent Recovery = 100%	
C-2	89' - 94'	13	12 14 10 9	60"	Hard, gray, slightly weathered, some fratures, APHANITIC SCHIST. Percent Recovery = 100%	
						94'
					Bottom of Exploration = 94'	

Remarks:
Boring moved prior to drilling from N3082470.57, E744502.92 to N3082472.43, E744505.92 for access constraints (slopes, adjacent structure, etc.) Borings on railroad property and will be grouted upon completion. The moisture content in S-1 and S-2 are wet due to the water introduced during the drilling process.

Protective Device - Stand: Box:
Well Depth: Solid Pipe:
Stick Up Pipe: Screen Pipe:

Penetration Resistance (N) Guide:

Cohesionless Soils (Sands, Gravels)		Cohesive Soils (Silts, Clays)	
Relative Density	Penetration Resistance	Consistency	Penetration Resistance
Very Loose	0 - 4	Very Soft	0 - 2
Loose	4 - 10	Soft	2 - 4
Medium Dense	10 - 30	Medium Stiff	4 - 8
Dense	30 - 50	Stiff	8 - 15
Very Dense	Over 50	Very Stiff	15 - 30
N=Sum of Second and Third 6" Blow Counts		Hard	Over 30

Terms Used for Second Entry of Descriptions: and = 40-50%, some = 10-40%, trace = 10% or less

Type of Drill Rig: CME-750
Arrow-Board: Signs: Cones: 1
Casing HW Size: 4" Depth: 83'6"
Hammer Weight: 300 lbs. Fall: 30"
Sampler Type: S/S Size: 1 3/8"
Automatic Hammer Weight:
Safety Hammer Weight: 140 lbs.
Donut Hammer Weight:
Fall: 30"
Core Barrel Type NX: Size: 2.15"

BORING NOTES:

1. SEE BORING NOTES ON SHEET 3.

SEP. 7, 2024	ISSUED FOR CONSTRUCTION
DATE	DESCRIPTION

THIS SHEET IS APPROVED FOR CONSTRUCTION BY MASSDOT
AUTHORIZED SIGNATORY: STATE BRIDGE ENGINEER
USE ONLY PRINTS OF LATEST DATE

608930_BR2-6 (L040227).DWG Plotted on 5-Sep-2024 9:28 PM
07-September-2024 Fourth Structrual Submittal (S4)

LAWRENCE
LOWELL STREET

STATE	FED. AID PROJ. NO.	SHEET NO.	TOTAL SHEETS
MA	CMQ-003S(733)X	164	245
	PROJECT FILE NO.	608930	

BORING LOGS (4 OF 4)

BORING 4 (MASSDOT BB–2)

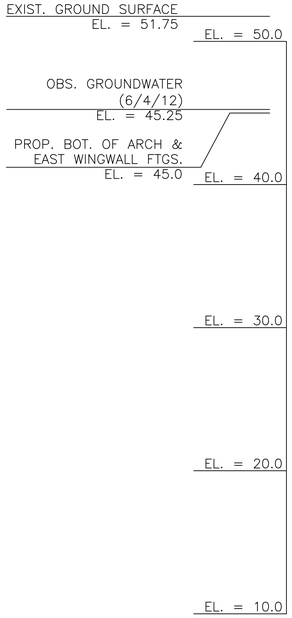

NEW HAMPSHIRE BORING, INC.
P.O. Box 165
Derry, NH 03038

Phone: (603)437-1610
Fax: (603) 437-0034
E Mail: nhb@nhboring.com

Boring No. BB-2
Scale 1" = 5'

City/Town: Lawrence	Bridge: L-04-027	Project File No: 604839	Contract No: 57734
Project: Lowell Street over the B&M Railroad		Date & Time Started: 5-30-12 9:00 am	Total Hours: 26.5
Groundwater Depth: 6'6"	Date & Time: 06-04-12 11:00 am	Date & Time Completed: 06-04-12 11:30 am	
Coordinates: N 3082452.83 E 744596.52	Driller's Name: Michael Misiaszek	Helper's Name: Thomas Garside Jr.	
Ground Elevation: 51.75	Inspector's Name: Cory St. Sauveur	Inspector's Company: Massachusetts Department of Transportation	

Sample Number	Depth Range (Feet)	Blow Counts per 6 Inches Coring Times Minute Per Foot	Recovery Inches	Field Description	Strata Changes
S-1	0' - 2'	3 5 7 9	4"	Wet, medium dense, dark brown, ORGANIC SILT, trace fine to coarse sand.	
S-2	4' - 6'	15 23 32 41	15"	Wet, very dense, gray, FINE SAND AND INORGANIC SILT, trace coarse sand.	
S-3	9' - 9'11"	43 77/5"	9"	Wet, very dense, brown, FINE TO COARSE SAND AND INORGANIC SILT.	
S-4	14' - 14'9"	80 40/3"	6"	Wet, very dense, gray, FINE SAND AND INORGANIC SILT, trace gravel.	
S-5	19' - 20'11"	15 35 45 75/5"	15"	Wet, very dense, gray, FINE TO COARSE SAND, some inorganic silt, some fine gravel.	
S-6	24' - 24'6"	120/6"	3"	Wet, very dense, gray, FINE TO COARSE SAND, some inorganic silt, some fine gravel.	
S-7	29' - 29'11"	47 73/5"	3"	Wet, very dense, brown, FINE SAND, some inorganic silt, trace coarse sand.	
S-8	34' - 34'5"	120/5"	4"	Wet, very dense, brown, FINE TO COARSE SAND, some inorganic silt.	
S-9	39' - 39'4"	120/4"	4"	Wet, very dense, brown, FINE SAND, some inorganic silt, trace coarse sand.	

BORING 4 (MASSDOT BB–2) CONT.

EL. = 10.0
EL. = 00.0
EL. = −10.0
EL. = −20.0

S-10	44' - 44'7"	82	38/1"	7"	Wet, very dense, brown, FINE SAND, some inorganic silt.	
S-11	49' - 49'11"	69	51/5"	9"	Wet, very dense, brown, FINE SAND, some inorganic silt.	
S-12	54' - 54'4"	120/4"		3"	Wet, very dense, gray, FINE SAND, some inorganic silt, trace coarse sand.	
S-13	59' - 59'10"	51	69/4"	9"	Wet, very dense, brown, FINE SAND, some inorganic silt.	
S-14	64' - 64'3"	60	60/3"	9"	Wet, very dense, gray, FINE SAND, some inorganic silt.	68'
S-15	69' - 69'9"	56	64/3"	5"	Wet, very dense, gray, FINE TO COARSE SAND, some inorganic silt. Top of BEDROCK at 70'	70'
C-1	70'6" - 75'6"	12 11 11 14 10		42"	Advanced to 70'6" and began coring. Hard, gray, fractured, APHANITIC SCHIST. Percent Recovery = 70%	
C-2	75'6" - 78'6"	9 14 13		36"	Hard, gray, fractured, APHANITIC SCHIST. Percent Recovery = 100%	78'6"
					Bottom of Exploration = 78'6"	

Remarks:
Boring moved prior to drilling from N3082452.30, E744598.84 to N3082452.83, E744596.52 for access constraints (slopes, adjacent structure, etc.) Borings on railroad property and will be grouted upon completion. Retrieved only 8' of rock due to hitting sand seams and jamming barrell, hole called at 78'6" per on site inspector.

Protective Device - Stand: Box:
Well Depth: Solid Pipe:
Stick Up Pipe: Screen Pipe:

Penetration Resistance (N) Guide:

Cohesionless Soils (Sands, Gravels)		Cohesive Soils (Silts, Clays)	
Relative Density	Penetration Resistance	Consistency	Penetration Resistance
Very Loose	0 - 4	Very Soft	0 - 2
Loose	4 - 10	Soft	2 - 4
Medium Dense	10 - 30	Medium Stiff	4 - 8
Dense	30 - 50	Stiff	8 - 15
Very Dense	Over 50	Very Stiff	15 - 30
N=Sum of Second and Third 6" Blow Counts		Hard	Over 30

Terms Used for Second Entry of Descriptions: and = 40-50%, some = 10-40%, trace = 10% or less

Type of Drill Rig: CME-750
Arrow-Board: Signs: Cones: 1
Casing HW Size: 4" Depth: 70'
Hammer Weight: 300 lbs. Fall: 30"
Sampler Type: S/S Size: 1 3/8"
Automatic Hammer Weight:
Safety Hammer Weight: 140 lbs.
Donut Hammer Weight:
Fall: 30"
Core Barrel Type NX: Size: 2.15"

BORING NOTES:

1. SEE BORING NOTES ON SHEET 3.

SEP. 7, 2024	ISSUED FOR CONSTRUCTION
DATE	DESCRIPTION

THIS SHEET IS APPROVED FOR CONSTRUCTION BY MASSDOT AUTHORIZED SIGNATORY: STATE BRIDGE ENGINEER

USE ONLY PRINTS OF LATEST DATE

608930_BR2-6 (L04027).DWG Plotted on 5-Sep-2024 9:28 PM
07-September-2024 Fourth Structrual Submittal (S4)

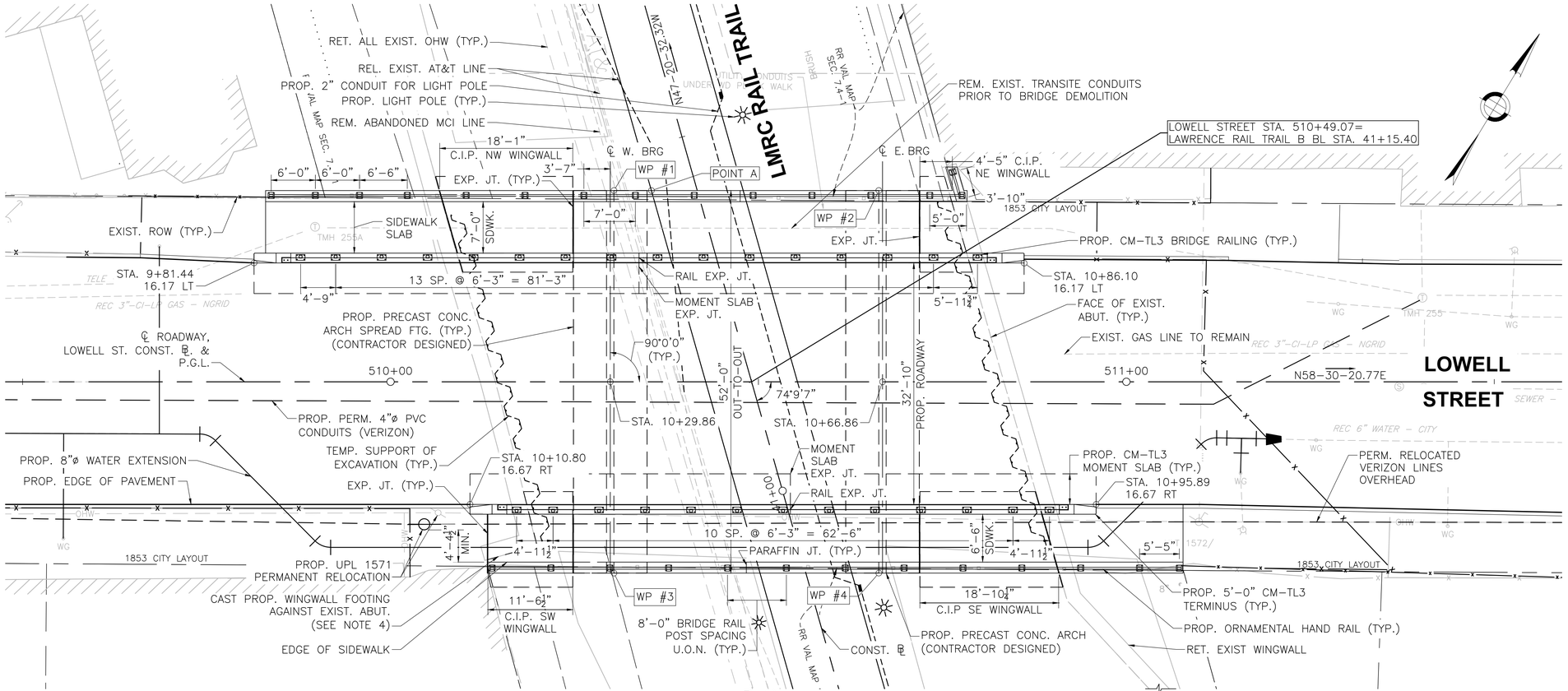

PLAN
SCALE: ⅛"=1'-0"

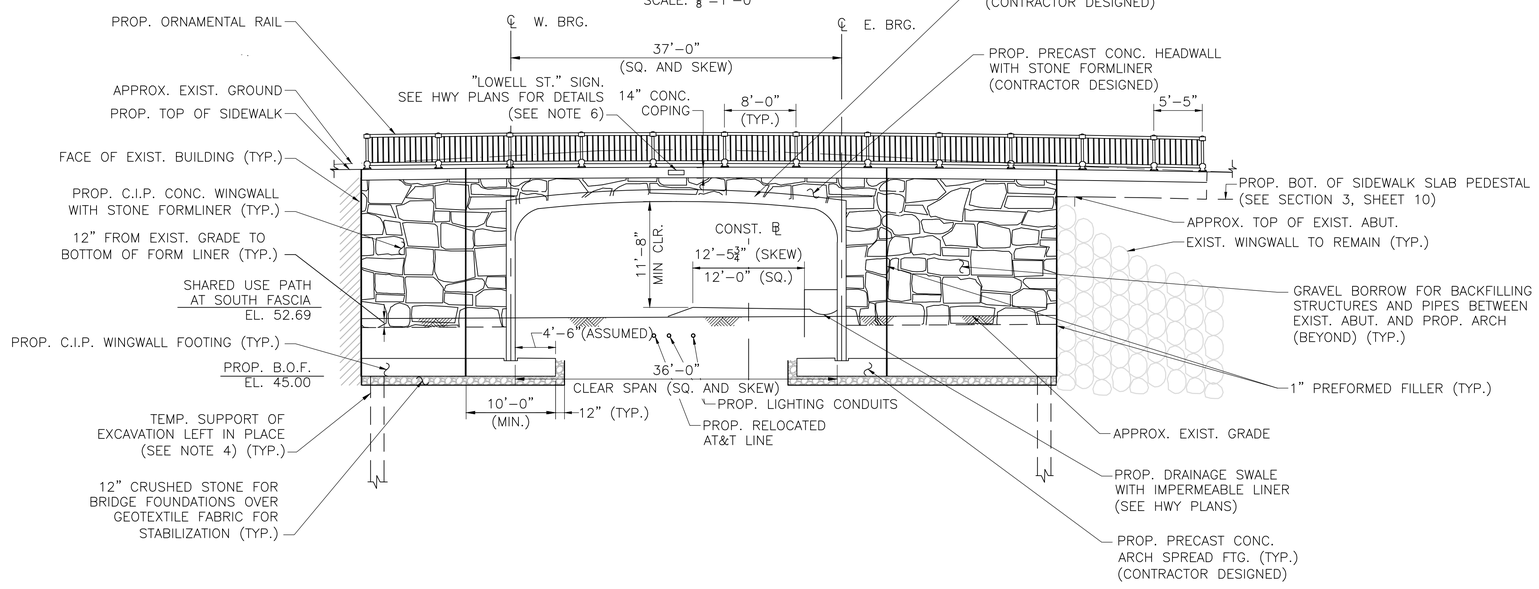

SOUTH ELEVATION
SCALE: ⅛" = 1'-0"

LAWRENCE
LOWELL STREET

STATE	FED. AID PROJ. NO.	SHEET NO.	TOTAL SHEETS
MA	CMQ-003S(733)X	165	245
PROJECT FILE NO. 608930			

PLAN AND ELEVATION

PRECAST CONCRETE ARCH WORKING POINTS		
WORKING POINT	STATION	OFFSET (FT)
WP #1	10+30.36	26.00 LT
WP #2	10+66.36	26.00 LT
WP #3	10+30.36	26.00 RT
WP #4	10+66.36	26.00 RT
POINT A	10+35.45	26.00 LT

NOTE:

WORKING POINTS ARE PROVIDED AT THE INSIDE CULVERT FACE ALONG THE THEORETICAL FACE OF WALL. POINT A REPRESENTS THE POINT OF MINIMUM VERTICAL CLEARANCE AND IS ALSO PROVIDED AT THE THEORETICAL FACE OF WALL.

PARAFFIN JOINT LOCATIONS		
ELEMENT	STATION	OFFSET
SOUTH CM-TL3 PEDESTAL	10+48.35	26.0' RT
NORTH CM-TL3 PEDESTAL	10+47.52	26.0' LT

EXPANSION JOINT LOCATIONS		
ELEMENT	STATION	OFFSET
SOUTH CM-TL3 PEDESTAL	10+54.34	16.67' RT
NORTH CM-TL3 PEDESTAL	10+33.77	16.17' LT
NORTHWEST WINGWALL & SIDEWALK	10+07.04	24.5' LT
	10+24.86	24.5' LT
NORTHEAST WINGWALL & SIDEWALK	10+71.86	24.5' LT
SOUTHWEST WINGWALL & SIDEWALK	10+13.19	24.5' RT
	10+24.86	24.5' RT
SOUTHEAST WINGWALL & SIDEWALK	10+71.86	24.5' RT
	10+90.45	24.5' RT

NOTES:

1. CONTROL JOINTS IN THE SIDEWALK SHALL BE PLACED EVERY 5 FEET AT MINIMUM.
2. EXPANSION JOINTS SHALL BE PLACED AS NOTED IN THE TABLE ABOVE AND AS SHOWN ON THE PLANS
3. SEE SHEETS 9 & 10 FOR C.I.P. WINGWALL DETAILS.
4. PRIOR TO INSTALLATION OF TEMPORARY SUPPORT OF EXCAVATION THE CONTRACTOR SHALL VERIFY LOCATION OF EXISTING FOOTING WITH TEST PITS. TEST PITS SHALL BE INCIDENTAL TO ITEM 950.19 – TEMPORARY SUPPORT OF EXCAVATION.
5. ALL FOOTING GEOMETRY FOR THE PRECAST CONCRETE ARCH IS ASSUMED AND SHALL BE DESIGNED BY THE CONTRACTOR.
6. ATTACH SIGN TO CONCRETE COPING WITH 4–SS SCREW ANCHORS OR APPROVED EQUIVALENT. NORTH ELEVATION SIMILAR.

SEP. 7, 2024	ISSUED FOR CONSTRUCTION
DATE	DESCRIPTION
THIS SHEET IS APPROVED FOR CONSTRUCTION BY MASSDOT AUTHORIZED SIGNATORY:	STATE BRIDGE ENGINEER
USE ONLY PRINTS OF LATEST DATE	

608930_BR7 (L04027).DWG Plotted on 11-Sep-2024 10:11 PM
Fourth Structrual Submittal (S4) 07-September-2024

LAWRENCE
LOWELL STREET

STATE	FED. AID PROJ. NO.	SHEET NO.	TOTAL SHEETS
MA	CMQ-003S(733)X	166	245
PROJECT FILE NO.	608930		

DEMOLITION DETAILS

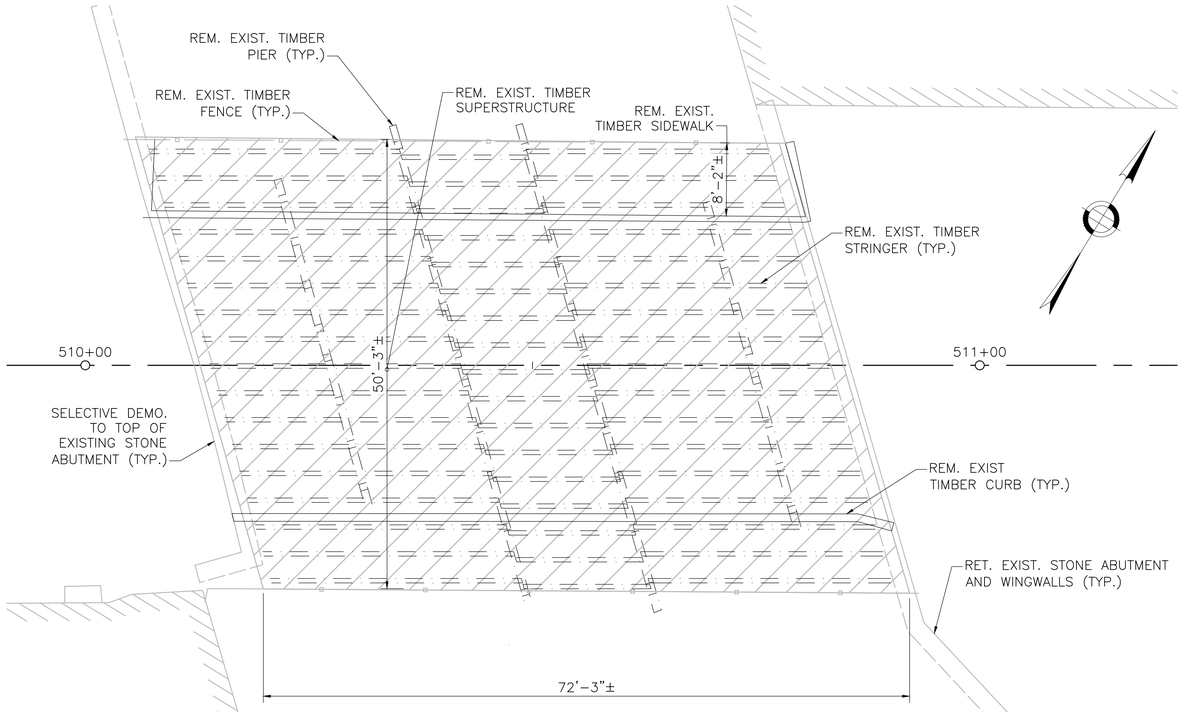

DEMOLITION SCHEMATIC
SCALE: N.T.S.

NOTES:

1. UTILITIES NOT SHOWN FOR CLARITY. REFER TO UTILITY PLANS FOR ADDITIONAL INFORMATION.
2. THE SIZE AND LOCATION OF THE TIMBER STRINGERS SHALL BE VERIFIED IN THE FIELD.

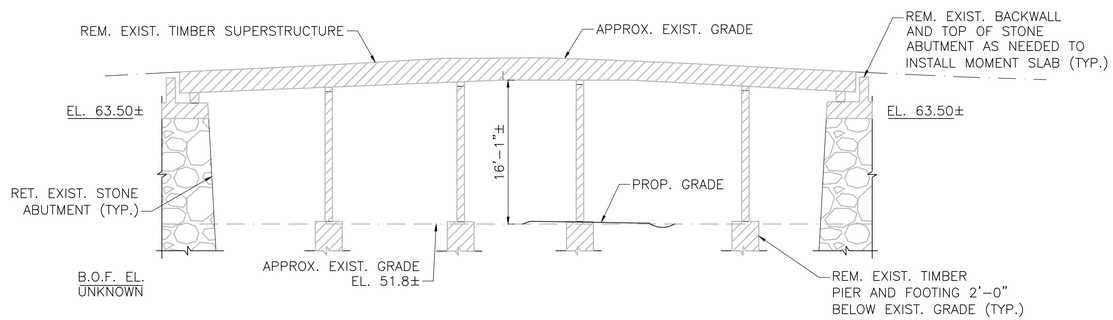

DEMOLITION LIMITS – EXISTING BRIDGE SCHEMATIC
SCALE: N.T.S.

SEP. 7, 2024	ISSUED FOR CONSTRUCTION
DATE	DESCRIPTION

THIS SHEET IS APPROVED FOR CONSTRUCTION BY MASSDOT
AUTHORIZED SIGNATORY: STATE BRIDGE ENGINEER
USE ONLY PRINTS OF LATEST DATE

608930_BR8 (L04027).DWG Plotted on 5-Sep-2024 9:29 PM
Fourth Structrual Submittal (S4) 07-September-2024

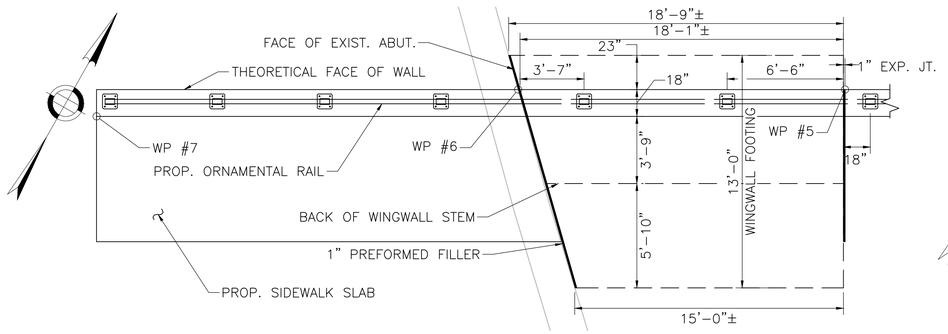

NORTHWEST WINGWALL PLAN

SCALE: ¼" = 1'-0"

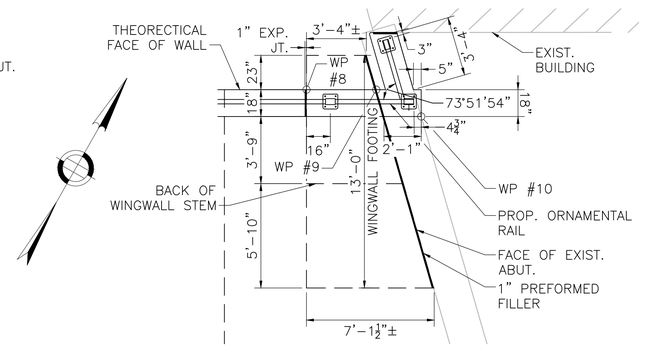

NOTE:
JOINT BETWEEN BUILDING AND WINGWALL AT SOUTHWEST CORNER SIMILAR.

NORTHEAST WINGWALL PLAN

SCALE: ¼" = 1'-0"

WINGWALL WORKING POINTS		
WORKING POINT	STATION	OFFSET (FT)
WP #5	10+24.78	26.00 LT
WP #6	10+06.61±	26.00 LT
WP #7	9+83.03	24.50 LT
WP #8	10+72.04	26.00 LT
WP #9	10+75.84±	26.00 LT
WP #10	10+78.36	24.50 LT

NOTE:
ALL PROPOSED WINGWALLS ARE PARALLEL TO THE LOWELL STREET BASELINE, UNLESS OTHERWISE NOTED.

LAWRENCE
LOWELL STREET

STATE	FED. AID PROJ. NO.	SHEET NO.	TOTAL SHEETS
MA	CMQ-003S(733)X	167	245
	PROJECT FILE NO. 608930		

WINGWALL DETAILS (1 OF 2)

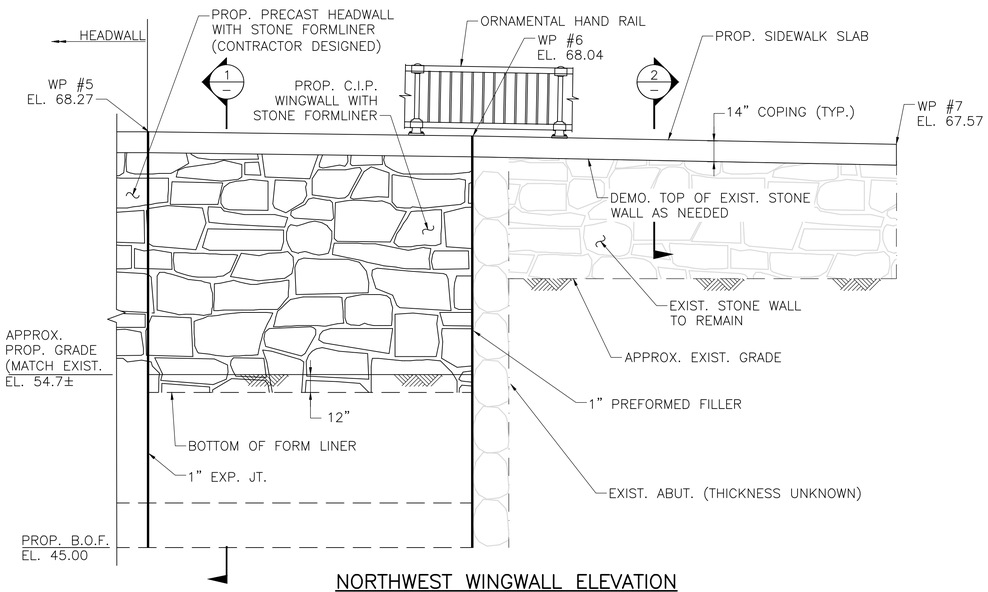

NORTHWEST WINGWALL ELEVATION

SCALE: ¼" = 1'-0"

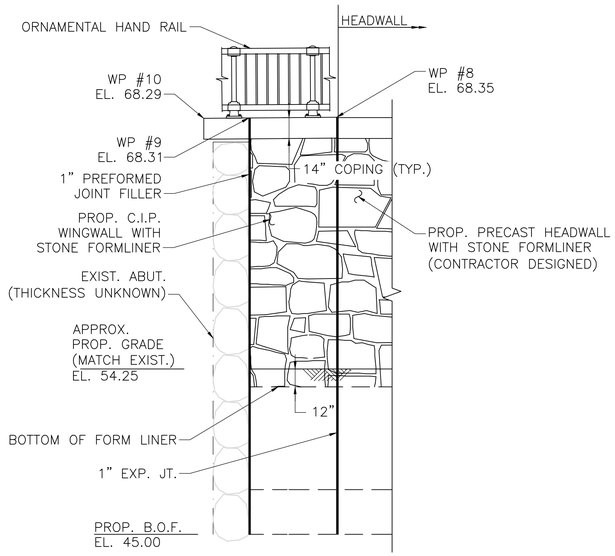

NORTHEAST WINGWALL ELEVATION

SCALE: ¼" = 1'-0"

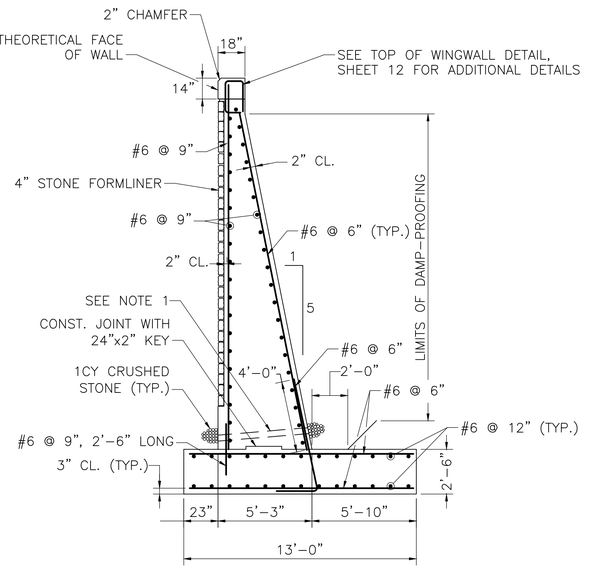

SECTION 1 – TYPICAL WINGWALL SECTION

SCALE: ¼" = 1'-0"

NOTES:

1. 4" ø WEEP HOLES 10'-0" O.C. LOCATED 12" ABOVE THE HEEL OF THE FOOTING SLOPING 1" PER FOOT TOWARDS THE FRONT FACE. PROVIDE 1 CUBIC YARD OF CRUSHED STONE AT EACH END OF WEEP HOLE.
2. ALL CONCRETE SHALL BE 5000 PSI, ¾ IN, 585 HP CEMENT CONCRETE EXCEPT SIDEWALK CONCRETE SHALL BE 4000 PSI, ¾ IN, 610 CEMENT CONCRETE.
3. FACTORED BEARING PRESSURE FOR THE WINGWALLS = 6.62 KSF AS PER AASHTO LRFD BRIDGE DESIGN SPECIFICATIONS STRENGTH I LOAD COMBINATION.

   FACTORED BEARING RESISTANCE FOR THE WINGWALLS = 19.0 KSF. FACTORED BEARING RESISTANCE IS THE PRODUCT OF THE NOMINAL BEARING RESISTANCE AND A RESISTANCE FACTOR OF 0.45.

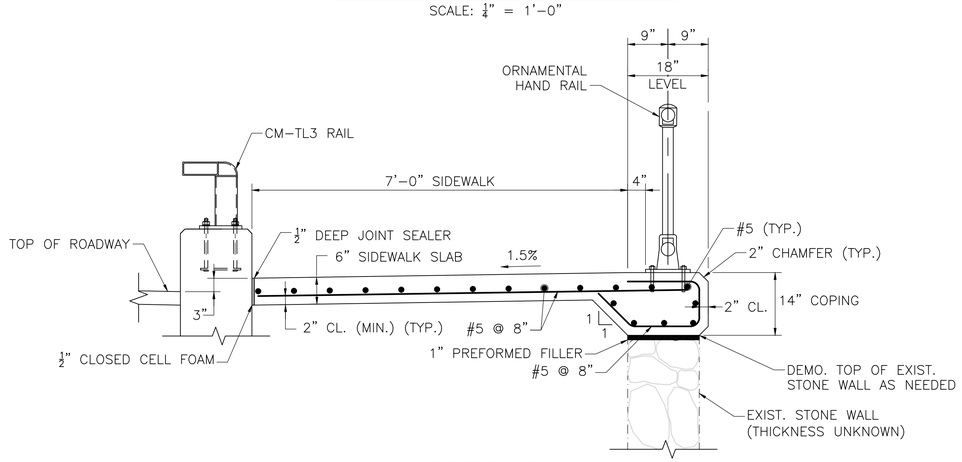

SECTION 2

SCALE: ¾" = 1'-0"

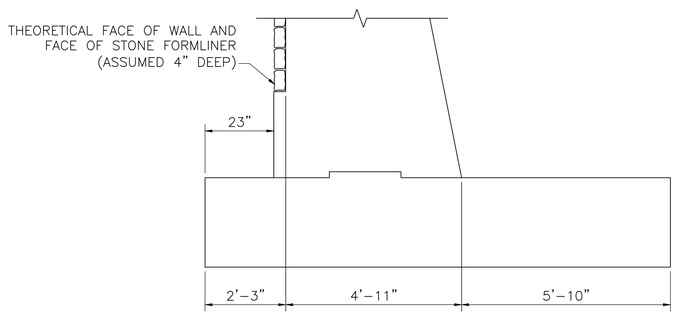

WINGWALL GEOMETRY

SCALE: ½" = 1'-0"

SEP. 7, 2024	ISSUED FOR CONSTRUCTION
DATE	DESCRIPTION

THIS SHEET IS APPROVED FOR CONSTRUCTION BY MASSDOT
AUTHORIZED SIGNATORY: STATE BRIDGE ENGINEER

USE ONLY PRINTS OF LATEST DATE

608930_BR9-11 (L04027).DWG Plotted on 5-Sep-2024 9:29 PM
07-September-2024 Fourth Structural Submittal (S4)

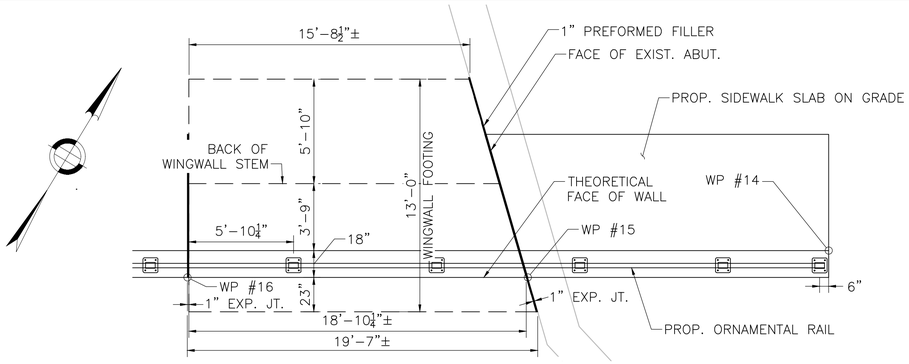

SOUTHEAST WINGWALL PLAN

SCALE: ¼" = 1'–0"

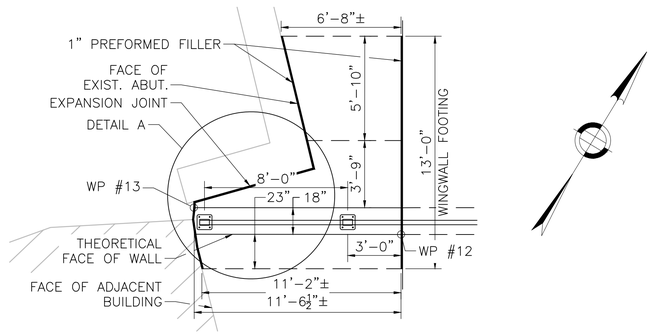

SOUTHWEST WINGWALL PLAN

SCALE: ¼" = 1'–0"

LAWRENCE
LOWELL STREET

STATE	FED. AID PROJ. NO.	SHEET NO.	TOTAL SHEETS
MA	CMQ-003S(733)X	168	245
PROJECT FILE NO.	608930		

WINGWALL DETAILS (2 OF 2)

WINGWALL WORKING POINTS		
WORKING POINT	STATION	OFFSET (FT)
WP #12	10+24.78	26.00 RT
WP #13	10+13.19	24.50 RT
WP #14	11+07.70	24.50 RT
WP #15	10+90.89±	26.00 RT
WP #16	10+71.94	26.00 RT

NOTE:
ALL PROPOSED WINGWALLS ARE PARALLEL TO THE LOWELL STREET BASELINE, UNLESS OTHERWISE NOTED.

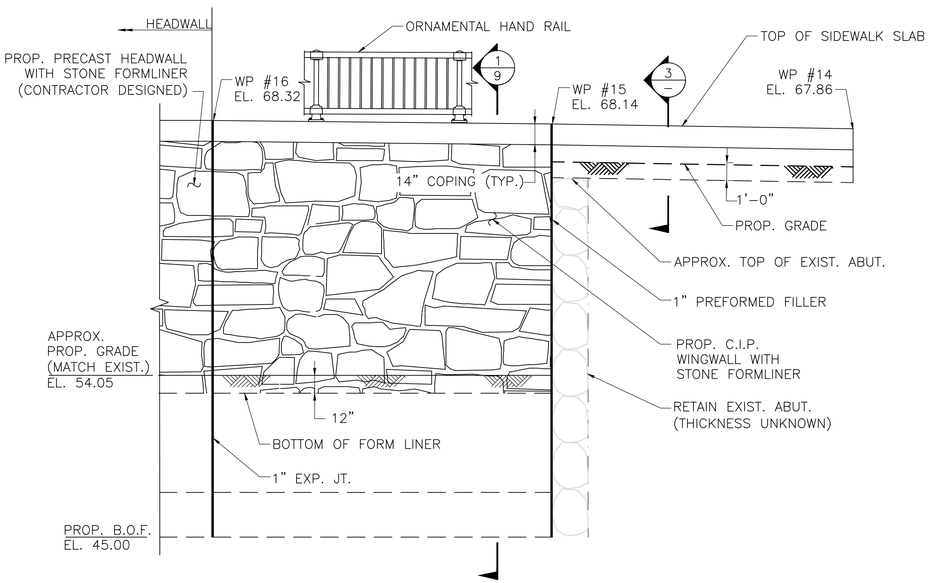

SOUTHEAST WINGWALL ELEVATION

SCALE: ¼" = 1'–0"

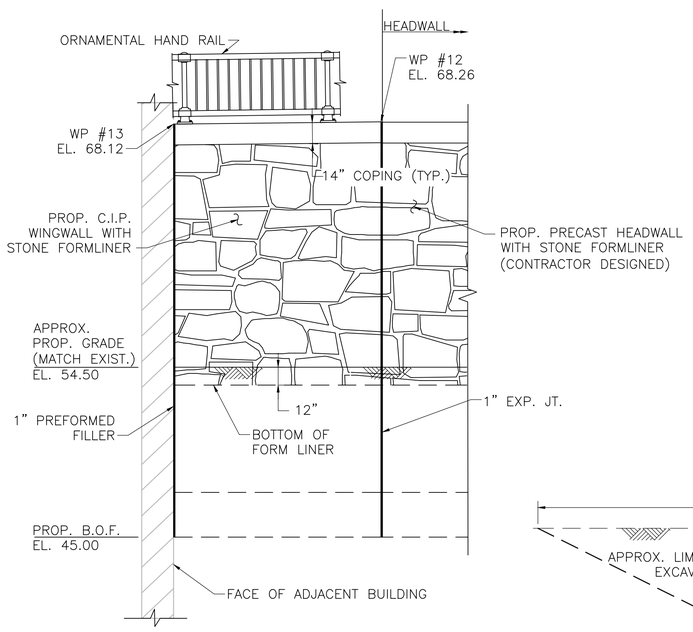

SOUTHWEST WINGWALL ELEVATION

SCALE: ¼" = 1'–0"

SECTION 4

SCALE: ¾" = 1'–0"

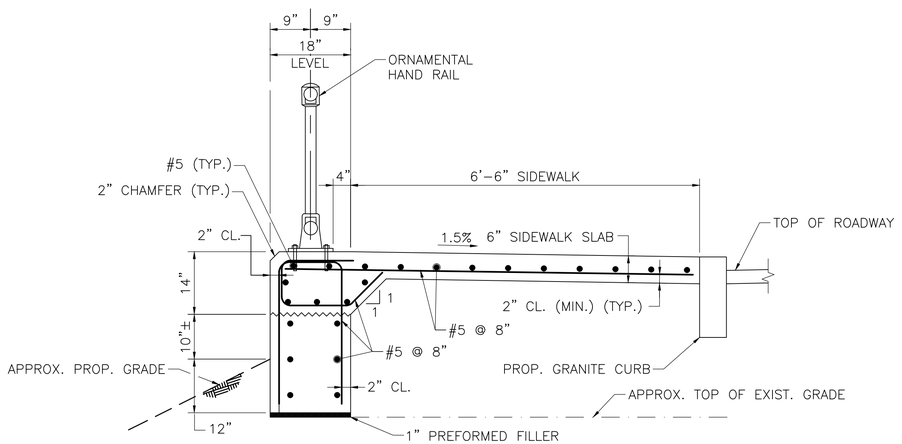

SECTION 3

SCALE: ¾" = 1'–0"

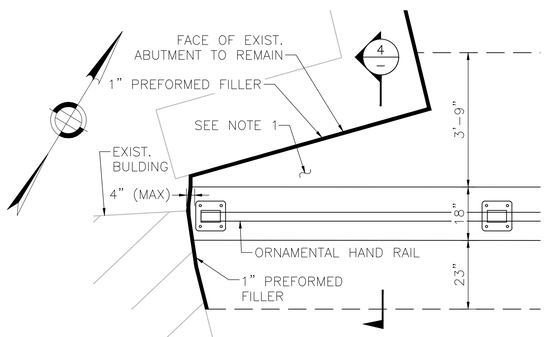

DETAIL A

SCALE: ½" = 1'–0"

SOUTHWEST WINGWALL NOTES:

1. GAP BETWEEN WINGWALL STEM AND EXISTING ABUTMENT TO BE FILLED WITH 5000 PSI, ¾", 585 HP CEMENT CONCRETE TO THE TOP OF THE EXISTING ABUTMENT.
2. JOINT BETWEEN BUILDING AND WINGWALL AT NORTHEAST CORNER SIMILAR.
3. SEE SECTION 4 THIS SHEET FOR REINFORCING. REINFORCING IS SIMILAR TO THE TYPICAL WINGWALL SECTION. BARS IN THE BACK FACE OF THE WALL SHOULD BE PLACED PARALLEL TO THE EXISTING ABUTMENT.

SEP. 7, 2024	ISSUED FOR CONSTRUCTION
DATE	DESCRIPTION

THIS SHEET IS APPROVED FOR CONSTRUCTION BY MASSDOT
AUTHORIZED SIGNATORY: STATE BRIDGE ENGINEER
USE ONLY PRINTS OF LATEST DATE

608930_BR9-11 (L04027).DWG Plotted on 5-Sep-2024 9:29 PM
07-September-2024
Fourth Structual Submittal (S4)

TRANSVERSE SECTION NOTES:

1. CONTRACTOR IS RESPONSIBLE FOR DEMOLITION OF ALL EXISTING BRIDGE INFRASTRUCTURE.
2. CONTRACTOR SHALL SMOOTHLY TRANSITION ALL PROPOSED ELEMENTS INTO THE EXISTING APPROACHES AND EMBANKMENT SLOPES.

PRECAST CONCRETE ARCH NOTES:

1. CONTRACTOR SHALL SUBMIT PRECAST CONCRETE ARCH, HEADWALL, AND FOOTING DESIGN CALCULATIONS PREPARED IN ACCORDANCE WITH THE LATEST AASHTO LRFD BRIDGE DESIGN SPECIFICATIONS AND THE MASSDOT BRIDGE MANUAL USING ENGLISH UNITS FOR HL-93 LOADING FOR APPROVAL BY THE ENGINEER. THE DESIGN COMPUTATIONS SHALL CONSIDER ALL LOADINGS AS APPROPRIATE DURING FABRICATION, SHIPMENT, ERECTION, CONSTRUCTION AND AFTER COMPLETION OF CONSTRUCTION BASED UPON THESE CONSTRUCTION DRAWINGS. CALCULATIONS SHALL BE PREPARED AND DRAWINGS SHALL BE STAMPED BY A PROFESSIONAL ENGINEER REGISTERED IN THE COMMONWEALTH OF MASSACHUSETTS.
2. ALL CONCRETE ARCH ELEMENTS SHALL BE 5000 PSI HP CEMENT CONCRETE.
3. THE ARCH DIMENSIONS PROVIDED ARE SHOWN TO ESTABLISH THE SIZE OF THE PROPOSED OPENING. THE WIDTHS AND THICKNESSES OF THE ARCH COMPONENTS MAY VARY DEPENDING ON THE MANUFACTURERS SPECIFICATIONS, PROVIDED THAT THE OPENING SIZE IS MAINTAINED AND ALL LONGITUDINAL JOINTS ARE PARALLEL TO THE CENTERLINE OF CONSTRUCTION.
4. THE DESIGN OF THE FOOTING DETAILED HEREIN IS BASED ON ASSUMED GEOMETRY OF THE ARCH COMPONENTS AND THE DESIGN LOADS SPECIFIED IN THE SPECIAL PROVISIONS. THE CONTRACTOR SHALL PREPARE AND SUBMIT A COMPLETE REDESIGN OF THE FOOTING SHOULD THE GEOMETRY OF THE FRAME VARY FROM THAT SPECIFIED ON THE PLANS.
5. THE CONTRACTOR SHALL APPROVE ALL ELEVATIONS AND DIMENSIONS OF THE SHOP DRAWINGS PRIOR TO FABRICATION. SHOP DRAWINGS AND CALCULATIONS SHALL BE SUBMITTED TO THE ENGINEER FOR REVIEW AND APPROVAL PRIOR TO FABRICATION.
6. REINFORCEMENT SHALL BE PLACED WITH A MINIMUM OF 2" COVER.
7. ALL CONCRETE ARCH REINFORCEMENT SHOWN IS CONCEPTUAL FOR BIDDING PURPOSES. THE CONTRACTOR SHALL DESIGN HEADWALL CONNECTION TO ARCH AND SHALL SUBMIT DESIGN CALCULATIONS AS PART OF THE SHOP DRAWINGS.
8. FACTORED BEARING PRESSURE FOR THE PRECAST ARCH FOOTINGS = 5.51 KSF AS PER AASHTO LRFD BRIDGE DESIGN SPECIFICATIONS STRENGTH I LOAD COMBINATION. BEARING PRESSURE IS CALCULATED USING THE ASSUMED FOOTING DIMENSIONS SHOWN ON THESE PLANS.

   FACTORED BEARING RESISTANCE FOR THE PRECAST ARCH FOOTINGS = 19.0 KSF. FACTORED BEARING RESISTANCE IS THE PRODUCT OF THE NOMINAL BEARING RESISTANCE AND A RESISTANCE FACTOR OF 0.45. THE FACTORED BEARING RESISTANCE SHALL BE USED IN THE DESIGN OF THE ARCH FOOTINGS (FOR FOOTINGS THAT ARE OVER-EXCAVATED AND PLACED ON CRUSHED STONE, AS SPECIFIED IN THE GEOTECHNICAL DESIGN REPORT – LOWELL STREET BRIDGE DATED SEPTEMBER 2020, WITH JANUARY 2023 REVISIONS).
9. SIDEWALK AND TRAVEL LANE WIDTHS SHOWN ARE APPROXIMATE AND SHALL GRADUALLY TAPER TO MEET THE EXISTING FEATURES AT THE BRIDGE APPROACHES.

PAVEMENT NOTES:

PROPOSED FULL DEPTH PAVEMENT:

SURFACE: 1½" SUPERPAVE SURFACE COURSE – 9.5 POLYMER (SSC-9.5-P) OVER
1¾" SUPERPAVE INTERMEDIATE COURSE – 12.5 (SIC-12.5)
BASE: 4½" SUPERPAVE BASE COURSE – 37.5 (SBC-37.5)
SUBBASE: 4" DENSE GRADED CRUSHED STONE OVER
8" GRAVEL BORROW, TYPE B

PROPOSED CEMENT CONCRETE SIDEWALK:

SURFACE: 4" CEMENT CONCRETE (4000PSI, ¾" 610)
8" GRAVEL BORROW, TYPE B

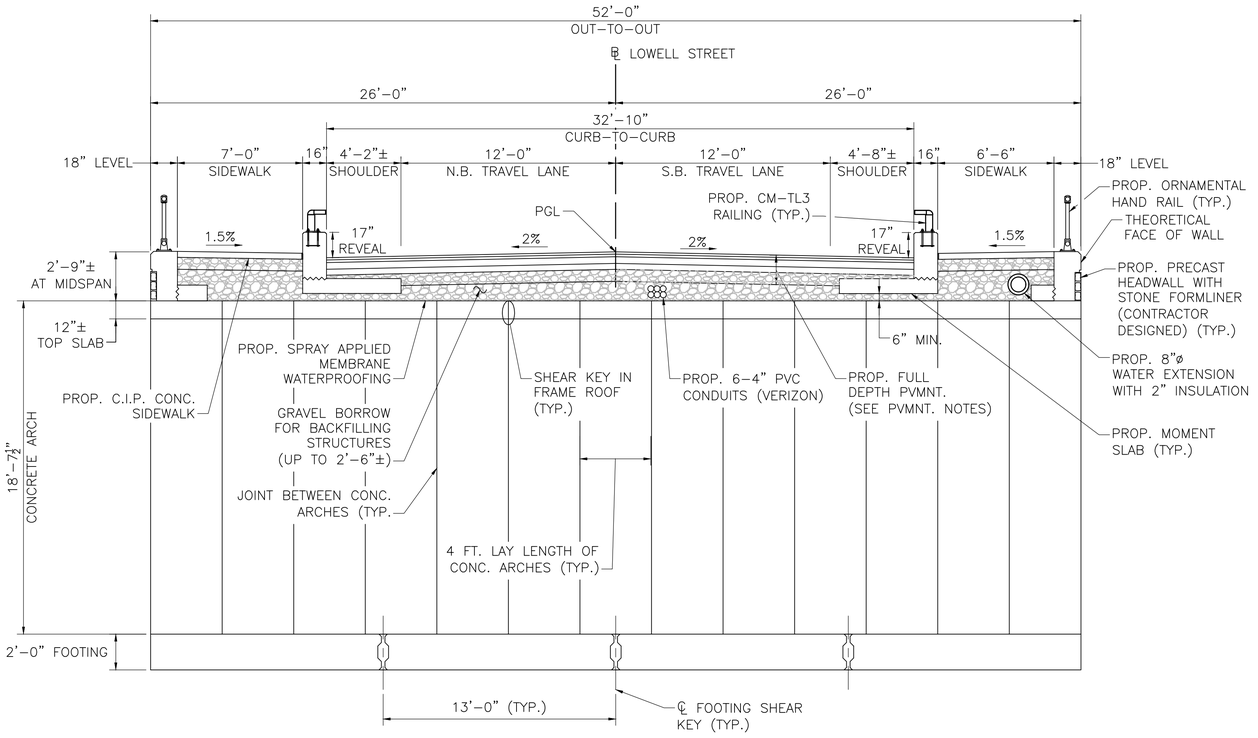

TRANSVERSE SECTION (LOOKING UPSTATION)

SCALE: ¼" = 1'-0"

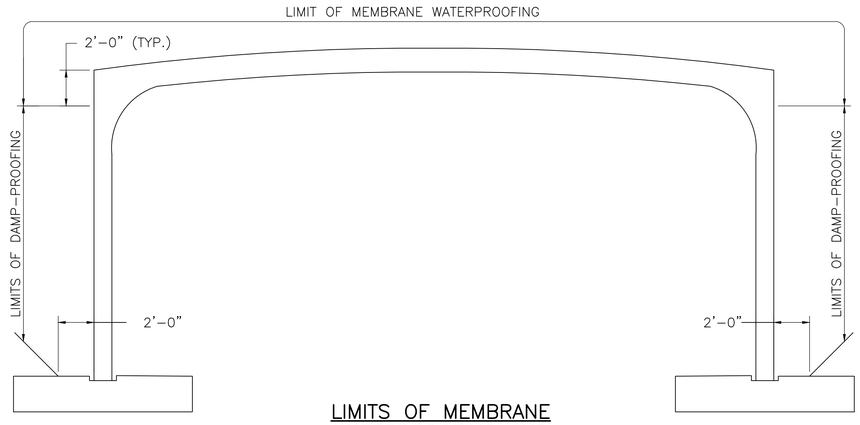

LIMITS OF MEMBRANE WATERPROOFING AND DAMP-PROOFING

SCALE: N.T.S.

LAWRENCE
LOWELL STREET

STATE	FED. AID PROJ. NO.	SHEET NO.	TOTAL SHEETS
MA	CMQ-003S(733)X	169	245
PROJECT FILE NO.	608930		

SUPERSTRUCTURE DETAILS

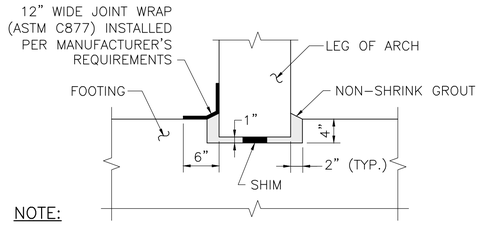

NOTE:

DETAILS AND DIMENSIONS ARE CONCEPTUAL AND MAY BE ALTERED BY THE FABRICATOR TO SUIT THEIR OPERATIONS, HOWEVER THE FUNCTION AND INTENT OF THE DETAIL MUST BE MET.

GROUTED KEYWAY

SCALE: 1" = 1'-0"

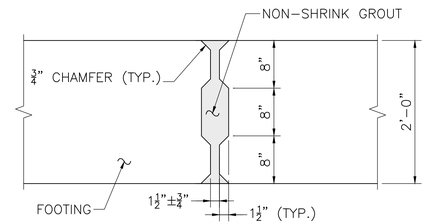

NOTE:

DETAILS AND DIMENSIONS ARE CONCEPTUAL AND MAY BE ALTERED BY THE FABRICATOR TO SUIT THEIR OPERATIONS, HOWEVER THE FUNCTION AND INTENT OF THE DETAIL MUST BE MET.

FOOTING SHEAR KEY

SCALE: 1" = 1'-0"

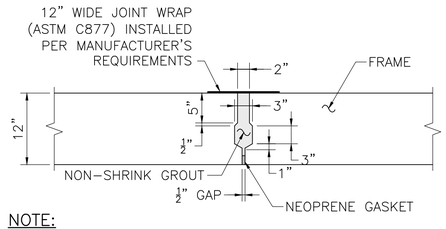

NOTE:

DETAILS AND DIMENSIONS ARE CONCEPTUAL AND MAY BE ALTERED BY THE FABRICATOR TO SUIT THEIR OPERATIONS, HOWEVER THE FUNCTION AND INTENT OF THE DETAIL MUST BE MET.

FRAME SHEAR KEY

SCALE: 1" = 1'-0"

SEP. 7, 2024	ISSUED FOR CONSTRUCTION
DATE	DESCRIPTION

THIS SHEET IS APPROVED FOR CONSTRUCTION BY MASSDOT
AUTHORIZED SIGNATORY: STATE BRIDGE ENGINEER
USE ONLY PRINTS OF LATEST DATE

608930_BR9-11 (L04027).DWG Plotted on 11-Sep-2024 10:32 PM
07-September-2024 Fourth Structrual Submittal (S4)

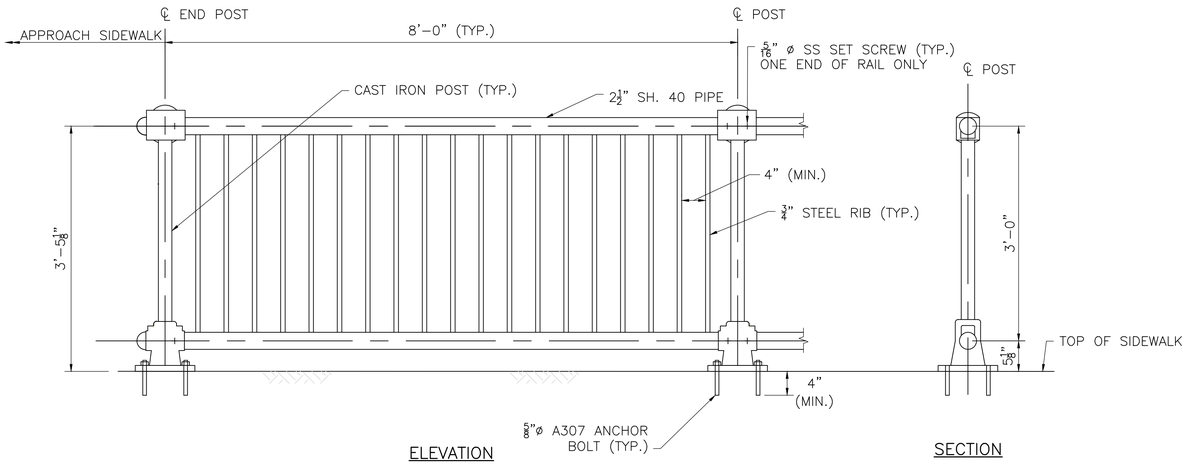

ELEVATION

SECTION

ORNAMENTAL HAND RAIL DETAIL

SCALE: 1" = 1'–0"

ORNAMENTAL HAND RAIL NOTES:

1. ANCHOR BOLTS SHALL BE SET WITH TEMPLATES.
2. THE NUT SECURING THE POST BASE PLATE TO THE CONCRETE SHALL BE TIGHTENED A SNUG FIT, AND THEN GIVEN AN ADDITIONAL ⅛ TURN AFTER THE STEEL IS IN PLACE.
3. BOTTOM OF POST BASE PLATE TO BE SET ON A ⅛" MOLDED FABRIC BEARING PAD (M9.16.2). THE THICKNESS OF THE PAD SHALL BE IGNORED BY THE DETAILER.
4. POSTS SHALL BE SET PLUMB. RAILS SHALL BE PARALLEL TO THE PROFILE GRADE LINE.
5. HORIZONTAL RAILING COMPONENTS ARE TO HAVE FIXED CONNECTIONS AT ONE POST AND SLIDING CONNECTIONS AT THE OTHER. EACH POST IS TO HAVE ALL SLIDING CONNECTIONS ON ONE SIDE AND HAVE ALL FIXED CONNECTIONS ON THE OTHER.
6. ENDS OF TUBE SECTIONS SHALL BE SAWED. GRIND SMOOTH EXPOSED EDGES. ALL CUT ENDS SHALL BE TRUE AND SMOOTH.
7. PROVIDE ¼"ø DRAIN HOLE IN RAILS AT LOW POINTS.
8. ALL STEEL SHAPES AND PLATES SHALL BE GALVANIZED AND PAINTED.
9. ALL STEEL, INCLUDING HEADS OF EXPOSED BOLTS, SHALL HAVE A FINISH COAT COLOR BLACK, FEDERAL COLOR ID #17038.

LAWRENCE
LOWELL STREET

STATE	FED. AID PROJ. NO.	SHEET NO.	TOTAL SHEETS
MA	CMQ-003S(733)X	170	245
PROJECT FILE NO.	608930		

MISCELLANEOUS DETAILS

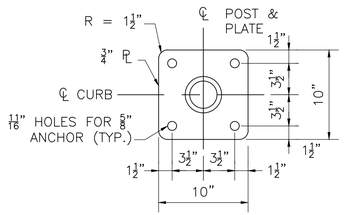

BASE PLATE DETAILS

SCALE: 1½" = 1'–0"

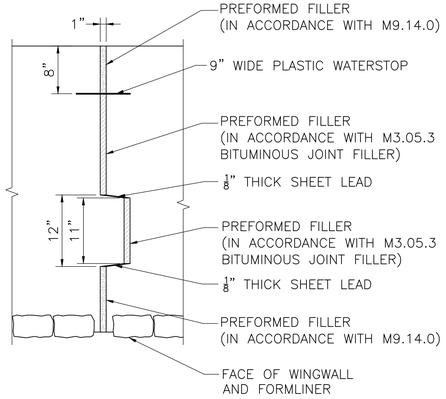

LIMITS OF PREFORMED FILLER

SCALE: 1" = 1'–0"

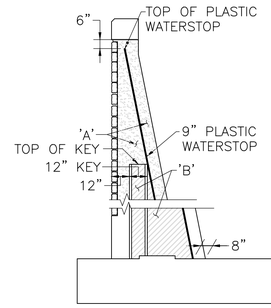

NOTES:

1. LONGITUDINAL REINFORCMENT SHALL END 2" CLEAR OF EXPANSION JOINT.
2. 'A' – PREFORMED FILLER (IN ACCORDANCE WITH M9.14.0).
   'B' – PREFORMED FILLER (IN ACCORDANCE WITH M3.05.3 BITUMINOUS JOINT FILLER).
3. FILLER MATERIAL SHALL BE FASTENED SECURELY TO ONE SIDE OF JOINT.

VERTICAL SECTION THRU EXPANSION JOINT

NOT TO SCALE

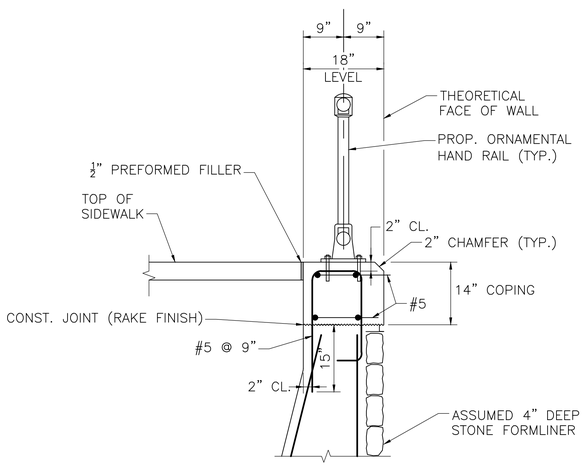

TOP OF WINGWALL DETAIL

SCALE: ¾" = 1'–0"

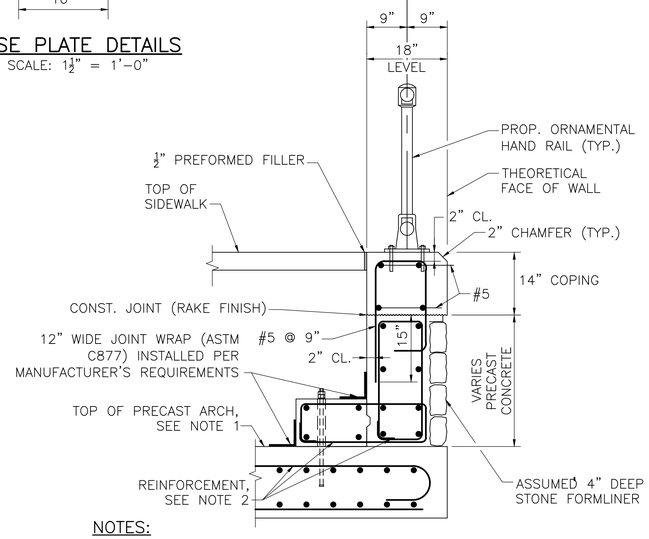

NOTES:

1. DESIGN OF THE PRECAST ARCH AND HEADWALL IS THE RESPONSIBILITY OF THE CONTRACTOR. SEE ITEM 995.01 OF THE SPECIAL PROVISIONS.
2. ARCH AND HEADWALL REINFORCEMENT AS REQUIRED BY CONTRACTOR DESIGN. PROVIDE COPING REINFORCEMENT AS SHOWN. CONTRACTOR SHALL ENSURE THAT THE HEADWALL COPING AND FORMLINER ALIGNS WITH THE ADJACENT RETAINING WALLS.

HEADWALL SECTION

SCALE: ¾" = 1'–0"

SEP. 7, 2024	ISSUED FOR CONSTRUCTION
DATE	DESCRIPTION

THIS SHEET IS APPROVED FOR CONSTRUCTION BY MASSDOT
AUTHORIZED SIGNATORY: STATE BRIDGE ENGINEER

USE ONLY PRINTS OF LATEST DATE

608930_BR12 (L04027).DWG Plotted on 5-Sep-2024 9:30 PM
07-September-2024 Fourth Structrual Submittal (S4)

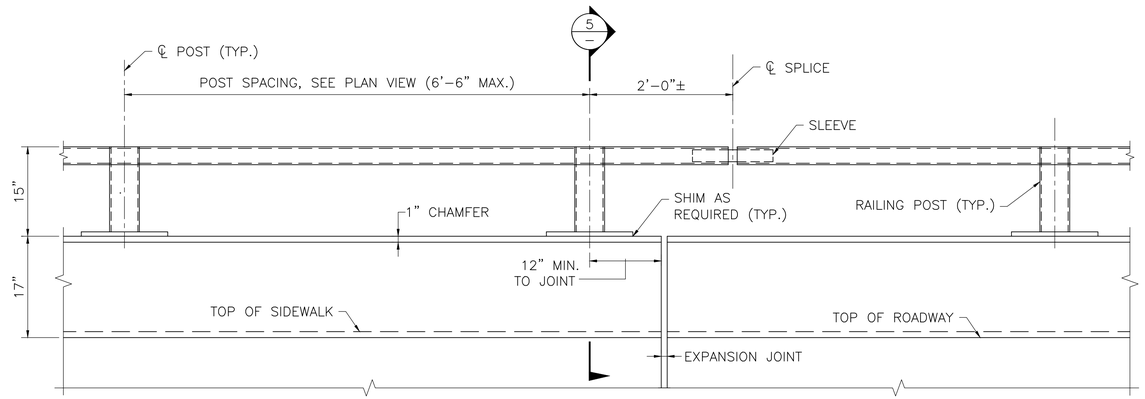

ELEVATION

SCALE: 1" – 1'-0"

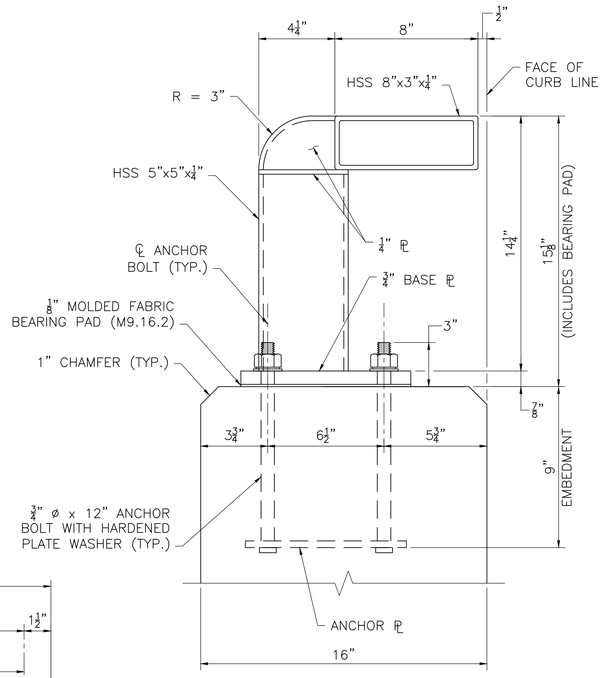

SECTION 5

SCALE: 3" = 1'-0"

LAWRENCE
LOWELL STREET

STATE	FED. AID PROJ. NO.	SHEET NO.	TOTAL SHEETS
MA	CMQ-003S(733)X	171	245
	PROJECT FILE NO. 608930		

CM-TL3 RAILING DETAILS

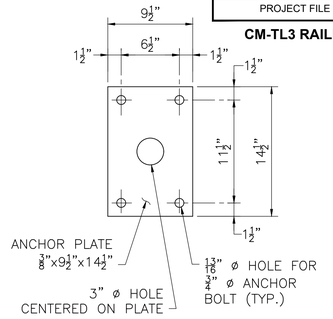

ANCHOR PLATE

SCALE 1½" = 1'-0"

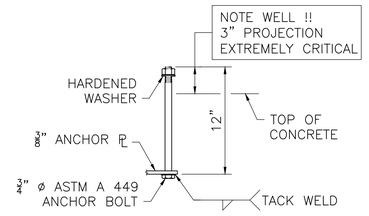

ANCHOR BOLT

SCALE 1½" = 1'-0"

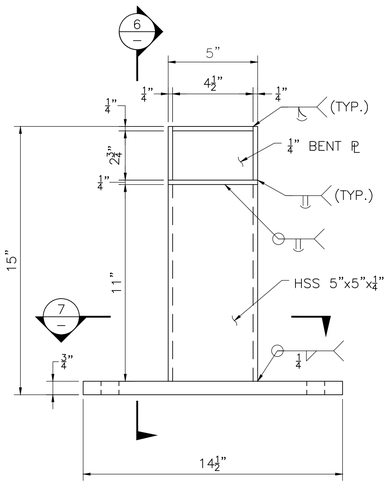

ELEVATION

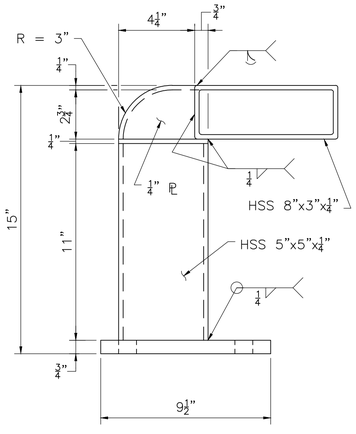

SECTION 6

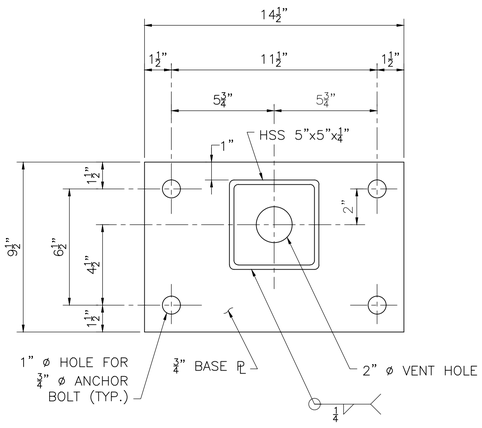

SECTION 7

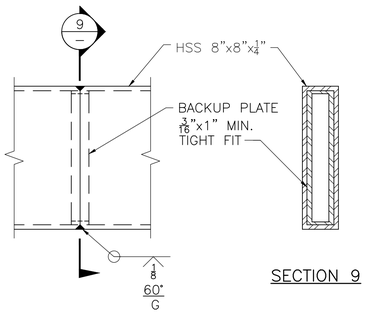

SECTION 9

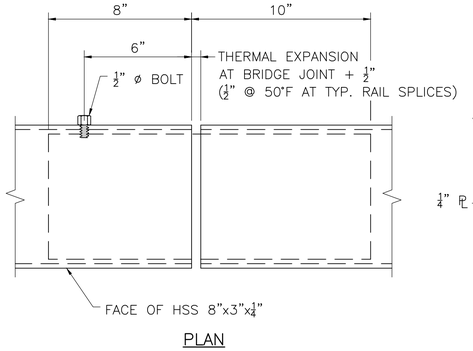

PLAN

RAIL POST DETAILS

SCALE: 3" = 1'-0"

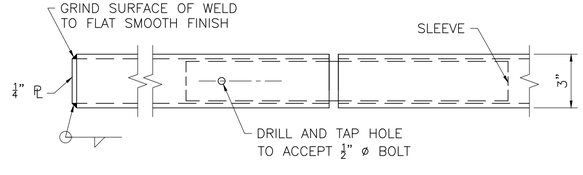

RAIL CAP

REAR ELEVATION

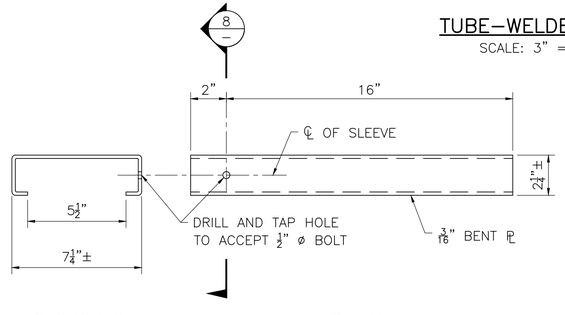

SECTION 8

SLEEVE

TUBE-WELDED SPLICE

SCALE: 3" = 1'-0"

TYPICAL SPLICE DETAILS

SCALE: 3" = 1'-0"

FINISH:

POST RAILS, BASE PLATES, AND SPLICE TUBES SHALL RECEIVE A FINISH COAT COLOR BLACK, FEDERAL COLOR ID #17038.

MATERIALS:

STRUCTURAL STEEL TUBING	ASTM A 500 GRADE B GALVANIZED
POST AND BASE PLATE	AASHTO M 270 GRADE 36 GALVANIZED
ANCHOR BOLTS	ASTM A 449 GALVANIZED
NUTS, BOLTS, AND WASHER	ASTM A 325 GALVANIZED

GENERAL NOTES:

1. RAILS SHALL BE CONTINUOUS OVER A MINIMUM OF FOUR POSTS, IF POSSIBLE. IF NEEDED, HSS 8"x3"x¼" RAILS MAY BE CONNECTED IN THE SHOP BY USING TUBE-WELDED SPLICES, AS SHOWN IN THE PROVIDED DETAILS.
2. RAILS SHALL HAVE A TUBE SPLICE IN THE PANEL OVER A BRIDGE EXPANSION JOINT.
3. ANCHOR BOLTS SHALL BE SET WITH TEMPLATES. THE NUT SECURING THE POST BASE PLATE TO THE CONCRETE SHALL BE TIGHTENED TO A SNUG FIT AND GIVEN A ADDITIONAL ⅛ TURN AFTER STEEL IS IN PLACE.
4. ALL POSTS TO PLUMB WHEN PROFILE GRADE EXCEEDS 1.5%. FOR PROFILE GRADES LESS THAN 1.5%, POSTS SHALL BE SET PERPENDICULAR TO GRADE.
5. WELDING SHALL CONFORM TO THE REQUIREMENTS OF ANSI/AASHTO/AWS D.1.5, EXCEPT THAT WELDING OF THE TUBE-WELDED SPLICE SHALL CONFORM TO THE REQUIREMENTS OF ANSI/AWS D.1.1

DATE	DESCRIPTION
SEP. 7, 2024	ISSUED FOR CONSTRUCTION

THIS SHEET IS APPROVED FOR CONSTRUCTION BY MASSDOT
AUTHORIZED SIGNATORY: STATE BRIDGE ENGINEER

USE ONLY PRINTS OF LATEST DATE

CM-TL3 BRIDGE RAILING

SHEET 13 OF 14 SHEETS BRIDGE NO. L-04-027 (C90)

608930_BR13 (L04027).DWG Plotted on 5-Sep-2024 9:30 PM

07-September-2024 Fourth Structrual Submittal (S4)

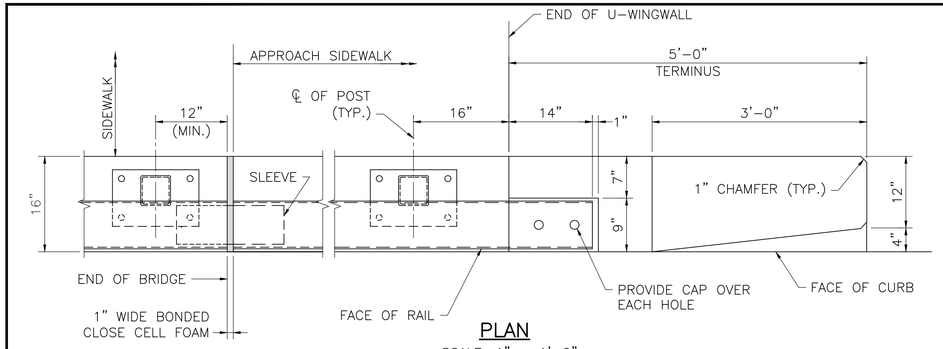

PLAN

SCALE: 1" = 1'-0"

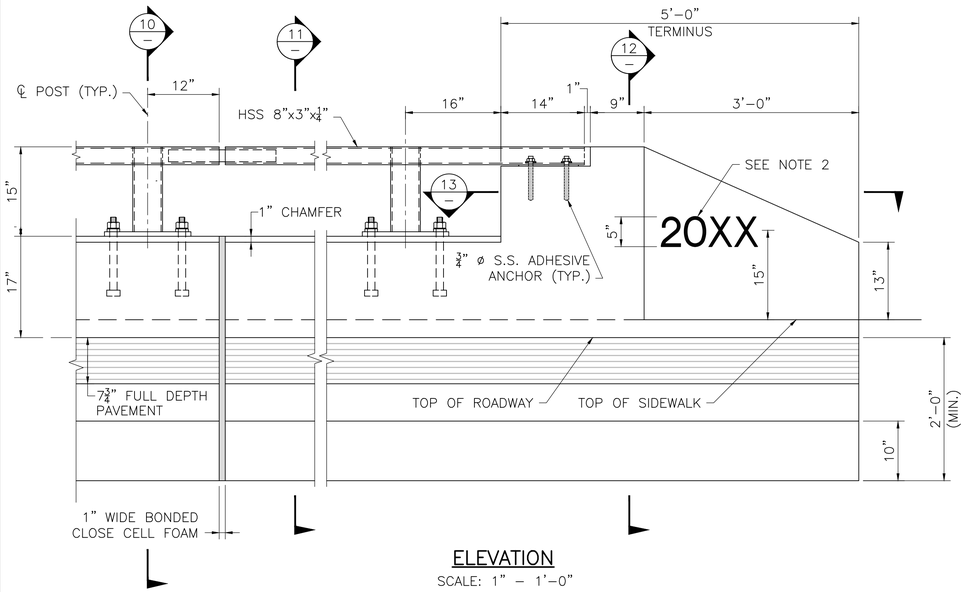

ELEVATION

SCALE: 1" – 1'-0"

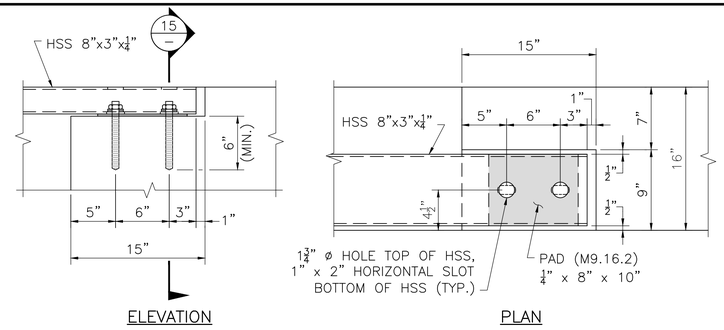

ELEVATION PLAN

RAIL ATTACHMENT

SCALE: 1½" = 1'-0"

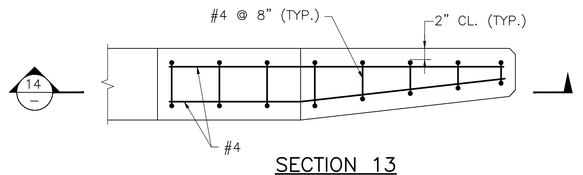

SECTION 13

SCALE: 1" – 1'-0"

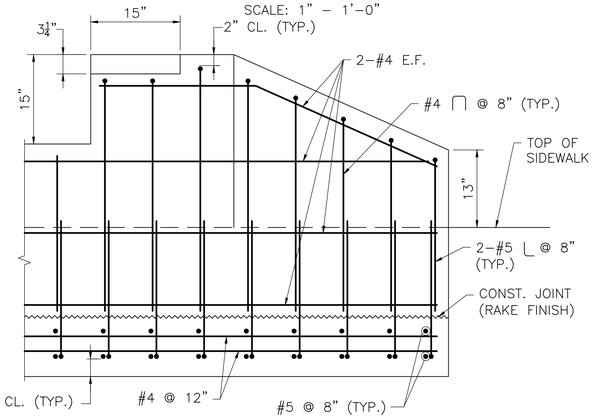

SECTION 14

SCALE: 1" – 1'-0"

LAWRENCE
LOWELL STREET

STATE	FED. AID PROJ. NO.	SHEET NO.	TOTAL SHEETS
MA	CMQ-003S(733)X	172	245
	PROJECT FILE NO. 608930		

CM-TL3 TERMINUS DETAILS

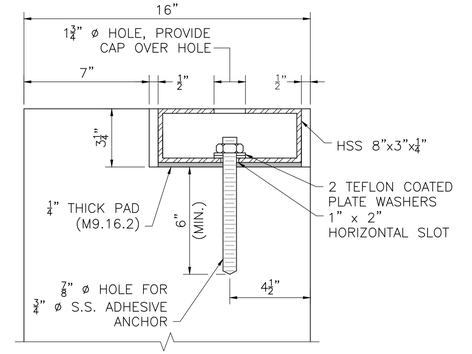

SECTION 15

SCALE: 3" = 1'-0"

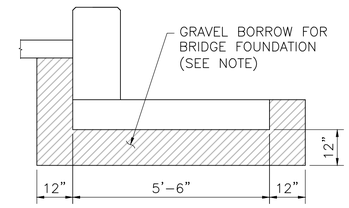

NOTE:

GRAVEL BORROW SHALL BE PLACED AND THOROUGHLY COMPACTED TO THE GRADE OF THE BOTTOM OF THE SLAB.

CM-TL3 RAILING BACKFILL

SCALE: ½" = 1'-0"

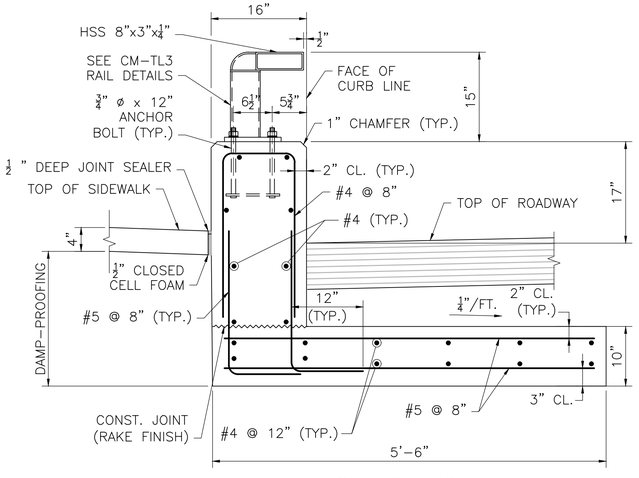

SECTION 10

SCALE: 1" – 1'-0"

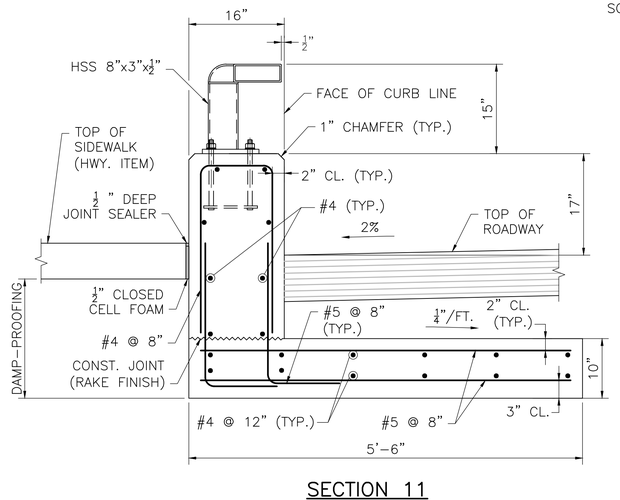

SECTION 11

SCALE: 1" – 1'-0"

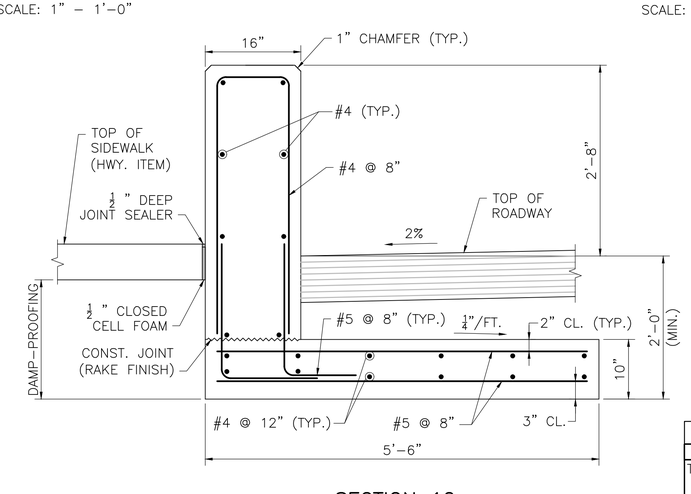

SECTION 12

SCALE: 1" – 1'-0"

NOTES:

1. ALL CONCRETE FOR THE CM-TL3 RAILING AND TERMINUS SHALL BE 5000 PSI, ¾ IN, 685 HP CEMENT CONCRETE.
2. USE LATEST CONTRACT COMPLETION YEAR IN EFFECT WHEN THE FIRST TERMINUS IS CAST.

DATE	DESCRIPTION
SEP. 7, 2024	ISSUED FOR CONSTRUCTION

THIS SHEET IS APPROVED FOR CONSTRUCTION BY MASSDOT
AUTHORIZED SIGNATORY: STATE BRIDGE ENGINEER
USE ONLY PRINTS OF LATEST DATE

608930_BR14 (L04027).DWG Plotted on 5-Sep-2024 9:30 PM
Fourth Structreal Submittal (S4) 07-September-2024

LAWRENCE
LMRC RAIL TRAIL

STATE	FED. AID PROJ. NO.	SHEET NO.	TOTAL SHEETS
MA	CMQ-003S(733)X	173	245
PROJECT FILE NO.	608930		

LMRC RAIL TRAIL
CROSS SECTIONS - 1 OF 73

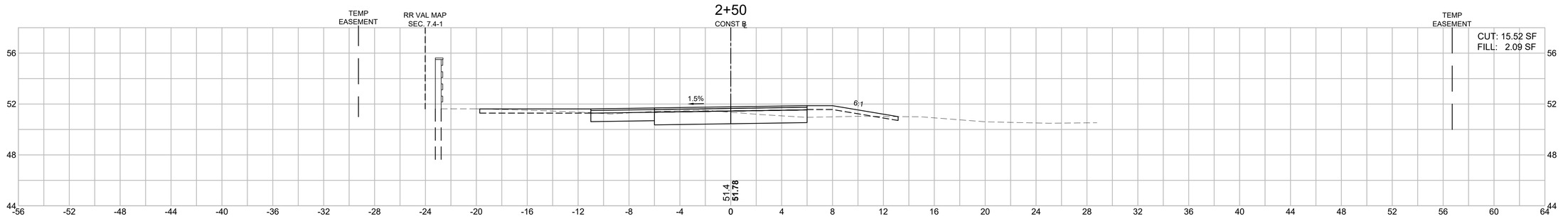

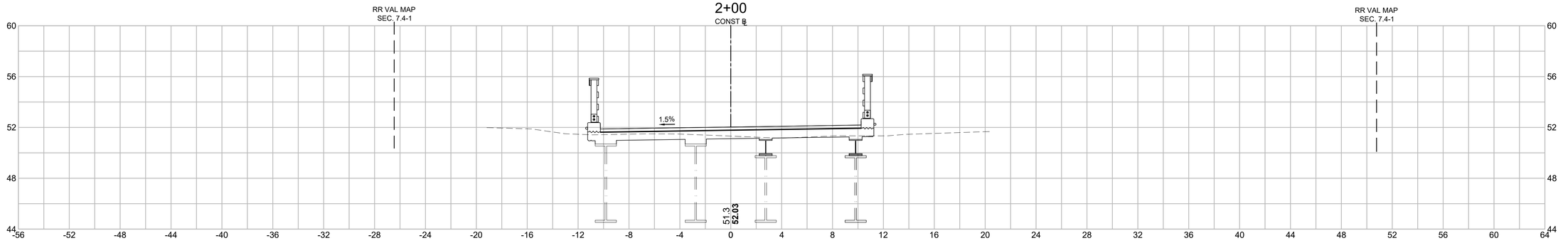

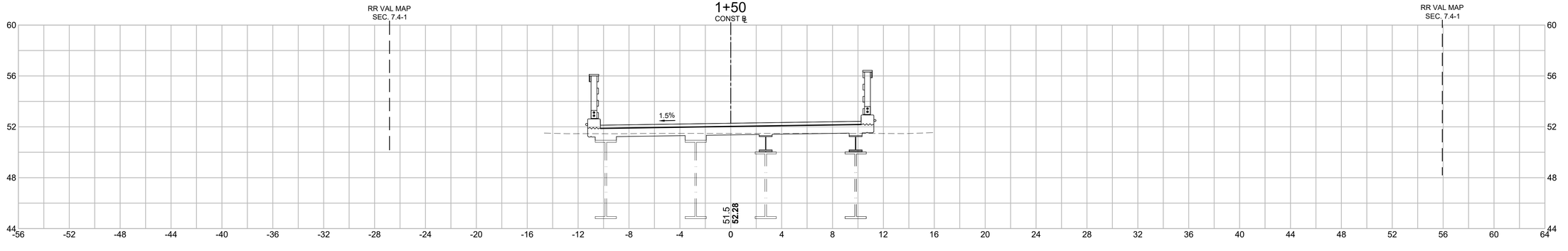

HOR. SCALE IN FEET
4 0 4 8
4 0 4 8
VER. SCALE IN FEET

608930_HD11(CROSS SECTIONS).DWG Plotted on 6-Sep-2024 8:09 AM

LAWRENCE
LMRC RAIL TRAIL

STATE	FED. AID PROJ. NO.	SHEET NO.	TOTAL SHEETS
MA	CMQ-003S(733)X	174	245
PROJECT FILE NO.	608930		

LMRC RAIL TRAIL
CROSS SECTIONS - 2 OF 73

608930_HD11(CROSS SECTIONS).DWG Plotted on 6-Sep-2024 8:09 AM

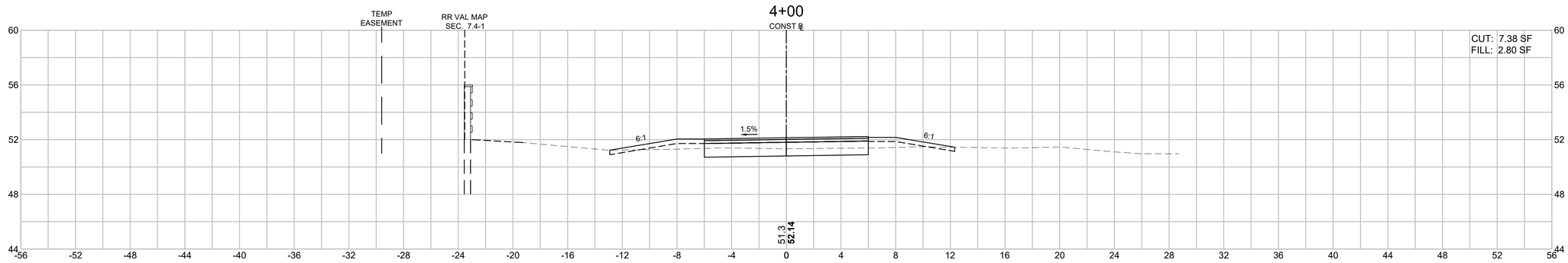

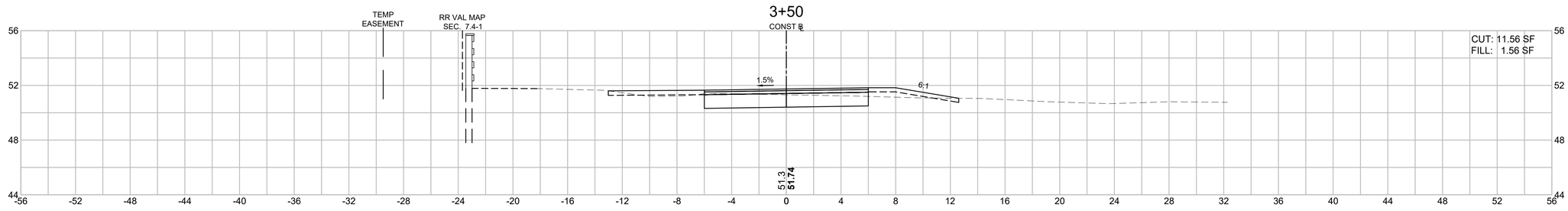

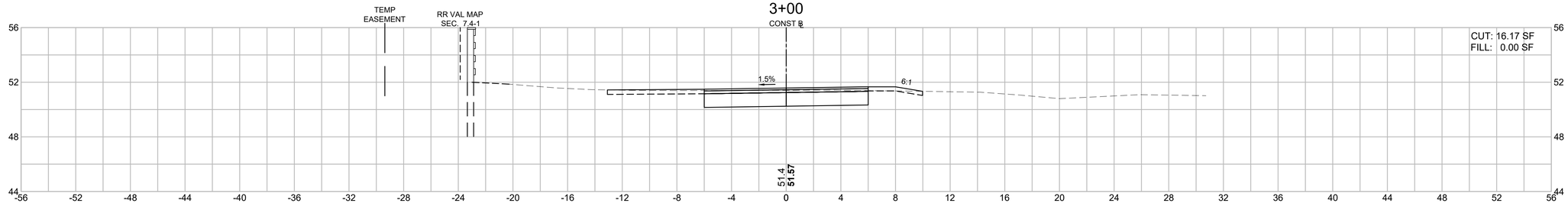

HOR. SCALE IN FEET
4 0 4 8
4 0 4 8
VER. SCALE IN FEET

LAWRENCE
LMRC RAIL TRAIL

STATE	FED. AID PROJ. NO.	SHEET NO.	TOTAL SHEETS
MA	CMQ-003S(733)X	175	245
PROJECT FILE NO.	608930		

LMRC RAIL TRAIL
CROSS SECTIONS - 3 OF 73

608930_HD11(CROSS SECTIONS).DWG Plotted on 6-Sep-2024 8:09 AM

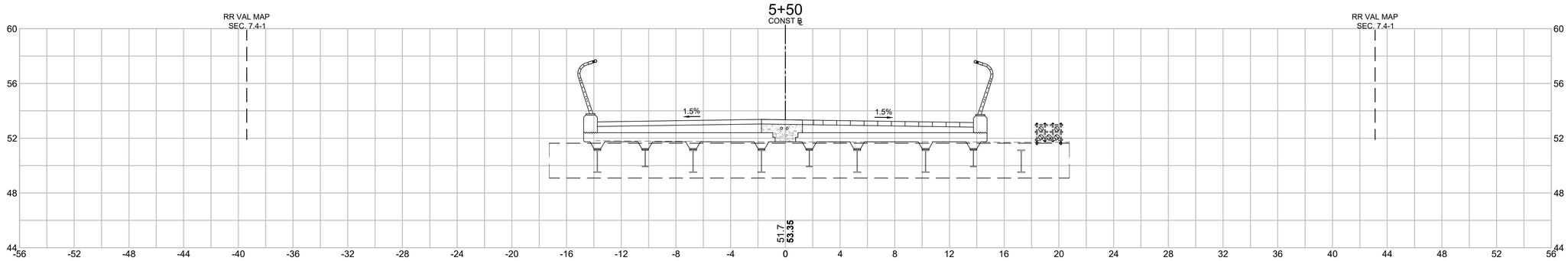

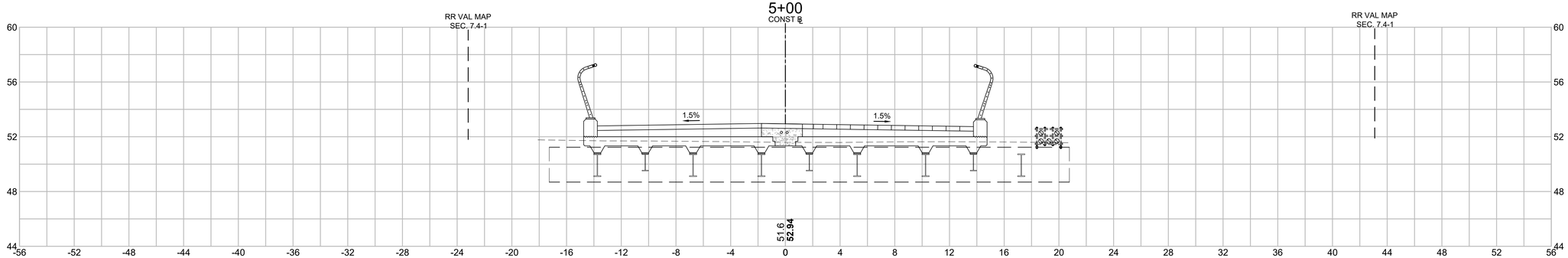

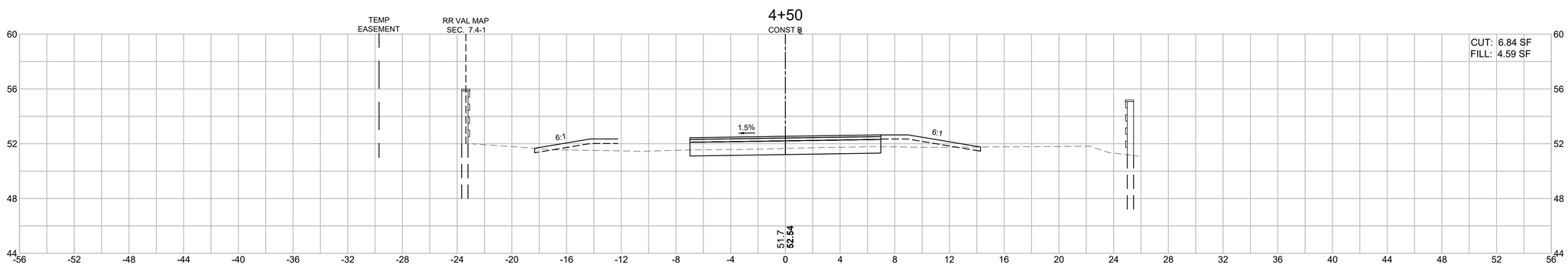

HOR. SCALE IN FEET
4 0 4 8
4 0 4 8
VER. SCALE IN FEET

LAWRENCE
LMRC RAIL TRAIL

STATE	FED. AID PROJ. NO.	SHEET NO.	TOTAL SHEETS
MA	CMQ-003S(733)X	176	245
PROJECT FILE NO.	608930		

LMRC RAIL TRAIL
CROSS SECTIONS - 4 OF 73

608930_HD11(CROSS SECTIONS).DWG Plotted on 6-Sep-2024 8:10 AM

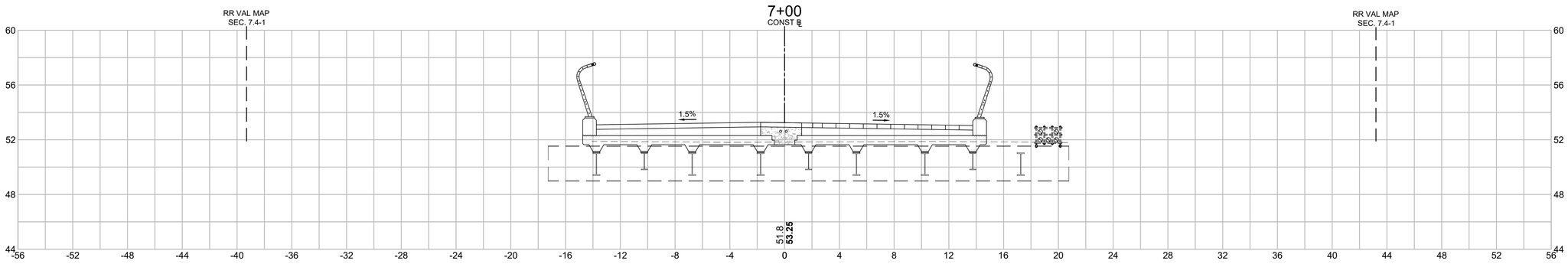

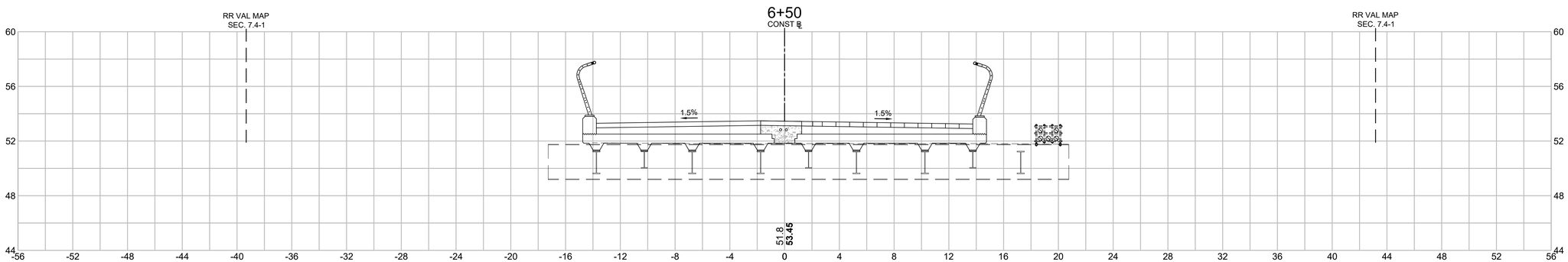

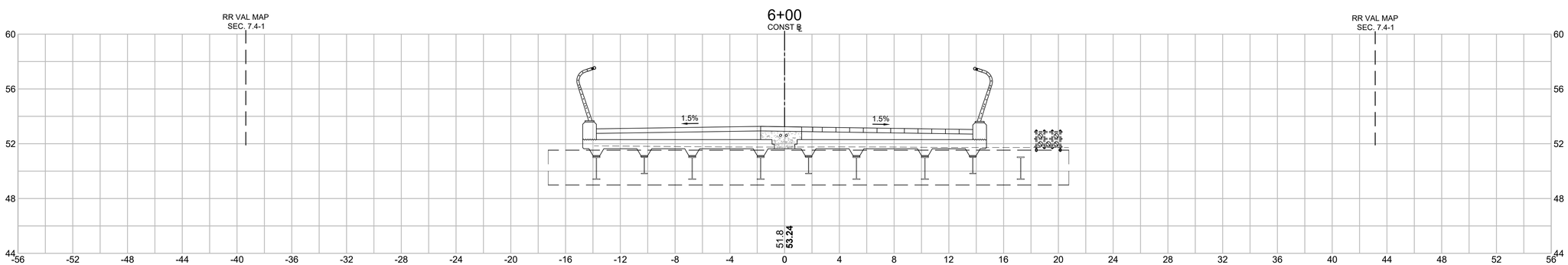

HOR. SCALE IN FEET
4 0 4 8
4 0 4 8
VER. SCALE IN FEET

LAWRENCE
LMRC RAIL TRAIL

STATE	FED. AID PROJ. NO.	SHEET NO.	TOTAL SHEETS
MA	CMQ-003S(733)X	177	245
PROJECT FILE NO.	608930		

LMRC RAIL TRAIL
CROSS SECTIONS - 5 OF 73

608930_HD11(CROSS SECTIONS).DWG Plotted on 6-Sep-2024 8:10 AM

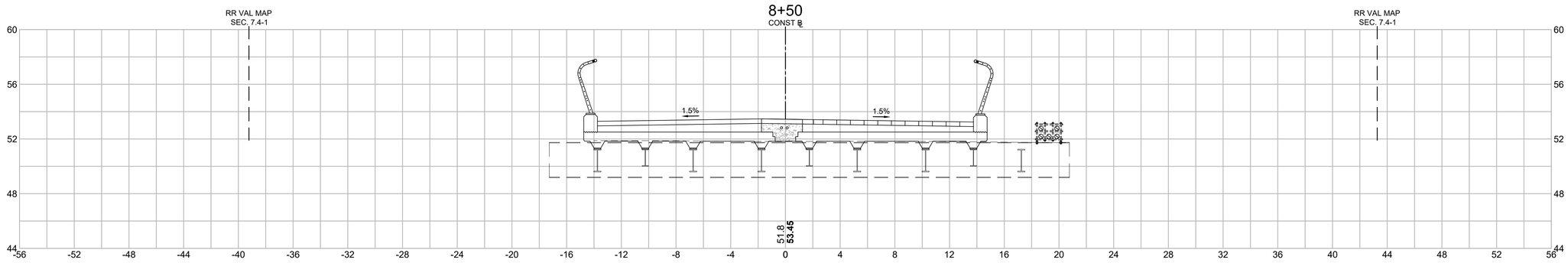

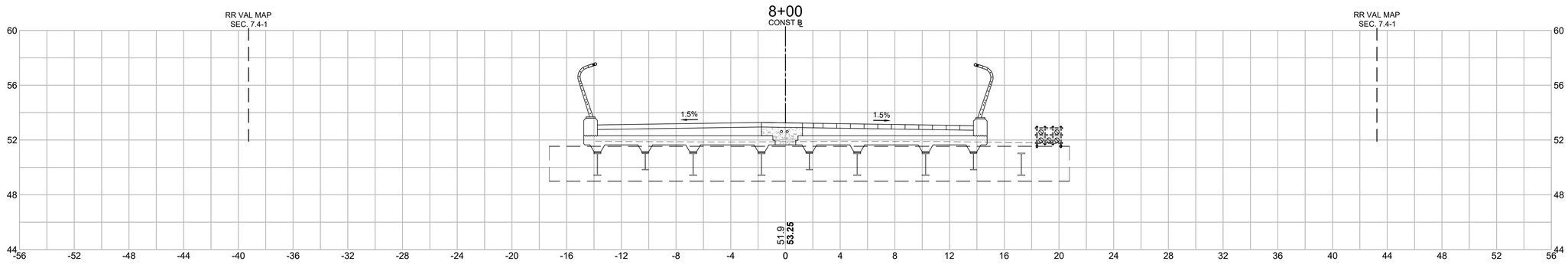

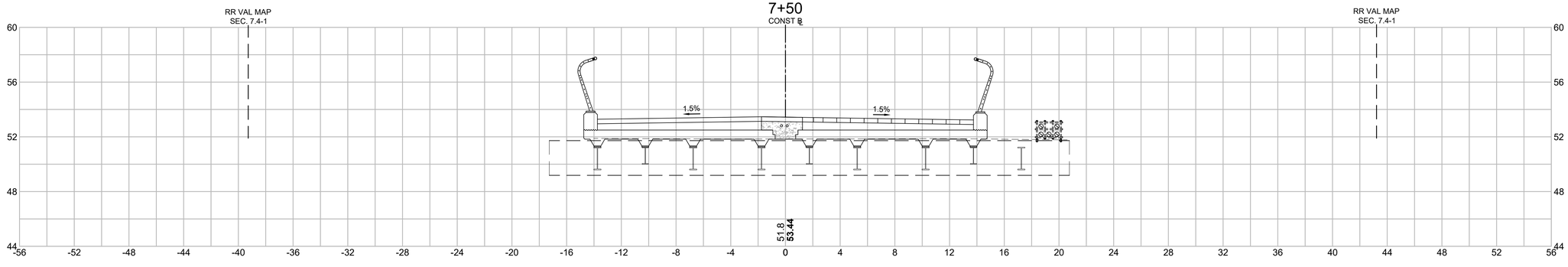

HOR. SCALE IN FEET
4 0 4 8
4 0 4 8
VER. SCALE IN FEET

LAWRENCE
LMRC RAIL TRAIL

STATE	FED. AID PROJ. NO.	SHEET NO.	TOTAL SHEETS
MA	CMQ-003S(733)X	178	245
PROJECT FILE NO.	608930		

LMRC RAIL TRAIL
CROSS SECTIONS - 6 OF 73

608930_HD11(CROSS SECTIONS).DWG Plotted on 6-Sep-2024 8:10 AM

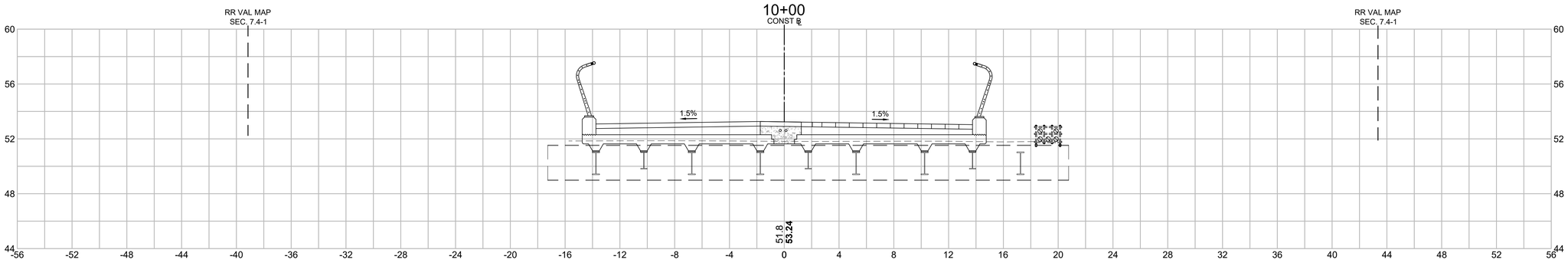

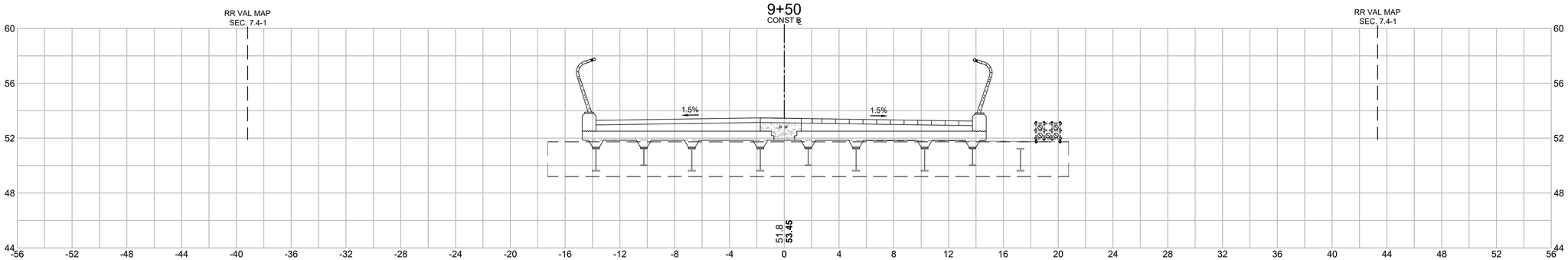

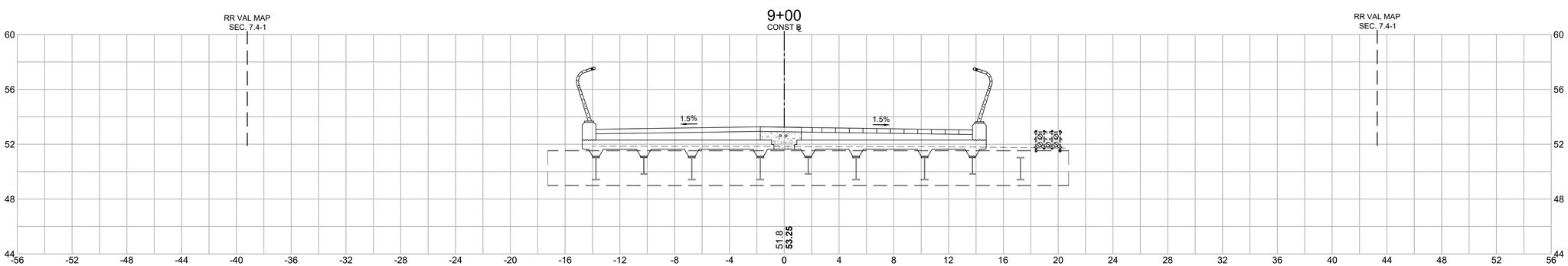

HOR. SCALE IN FEET
4 0 4 8
4 0 4 8
VER. SCALE IN FEET

LAWRENCE
LMRC RAIL TRAIL

STATE	FED. AID PROJ. NO.	SHEET NO.	TOTAL SHEETS
MA	CMQ-003S(733)X	179	245
PROJECT FILE NO.	608930		

LMRC RAIL TRAIL
CROSS SECTIONS - 7 OF 73

608930_HD11(CROSS SECTIONS).DWG Plotted on 6-Sep-2024 8:11 AM

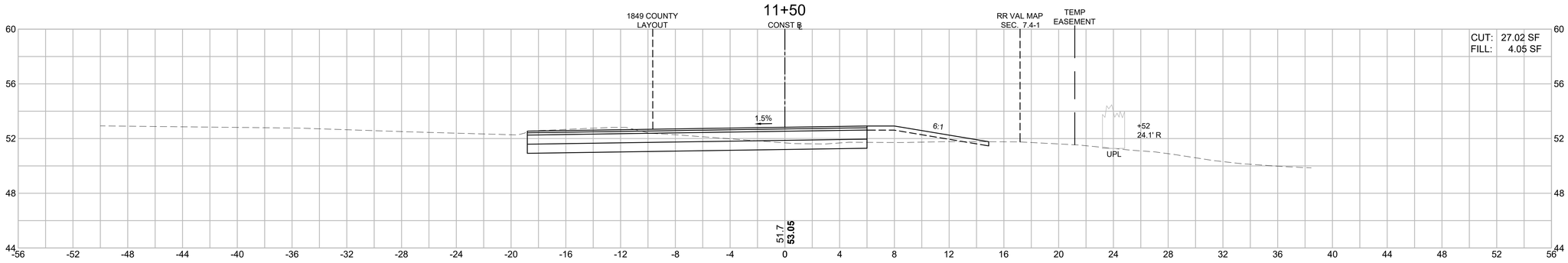

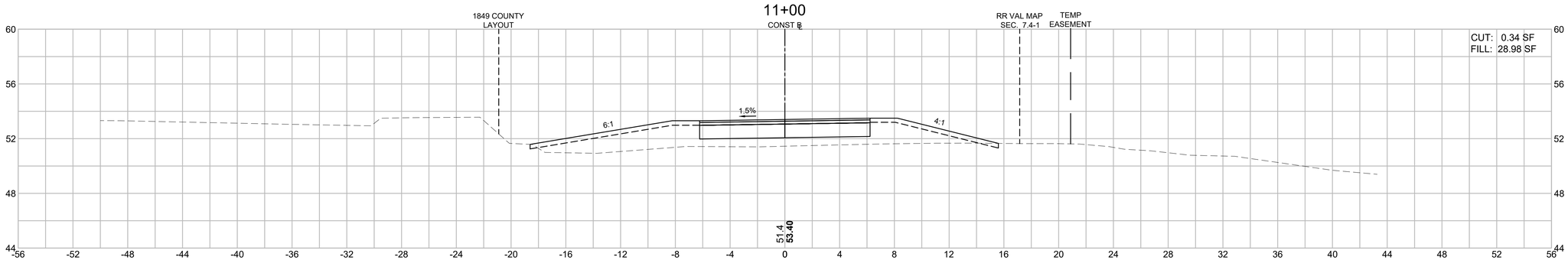

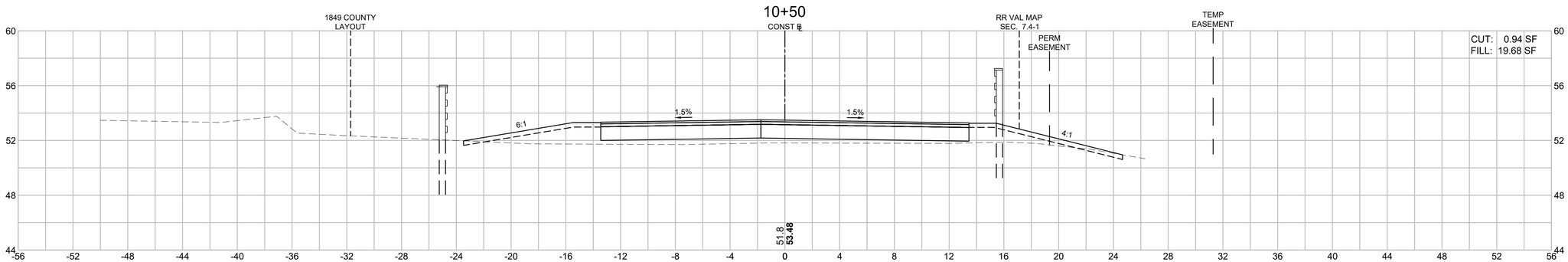

HOR. SCALE IN FEET
4 0 4 8
4 0 4 8
VER. SCALE IN FEET

LAWRENCE
LMRC RAIL TRAIL

STATE	FED. AID PROJ. NO.	SHEET NO.	TOTAL SHEETS
MA	CMQ-003S(733)X	180	245
PROJECT FILE NO.	608930		

LMRC RAIL TRAIL
CROSS SECTIONS - 8 OF 73

608930_HD11(CROSS SECTIONS).DWG Plotted on 6-Sep-2024 8:11 AM

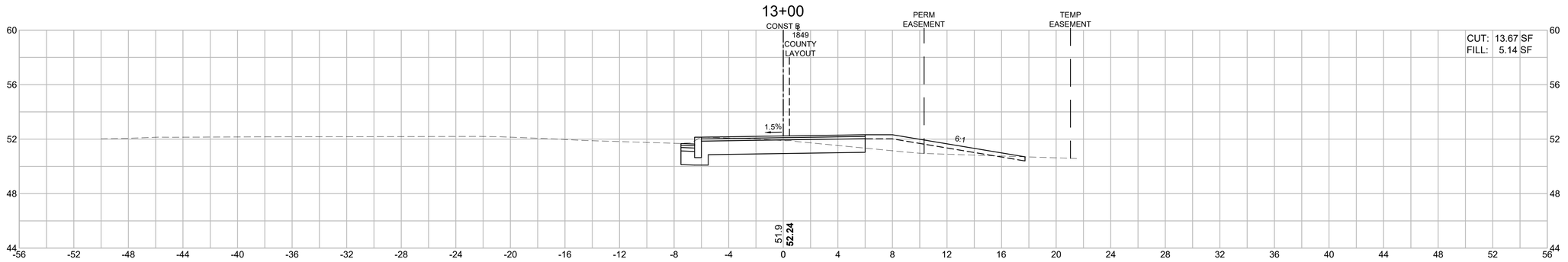

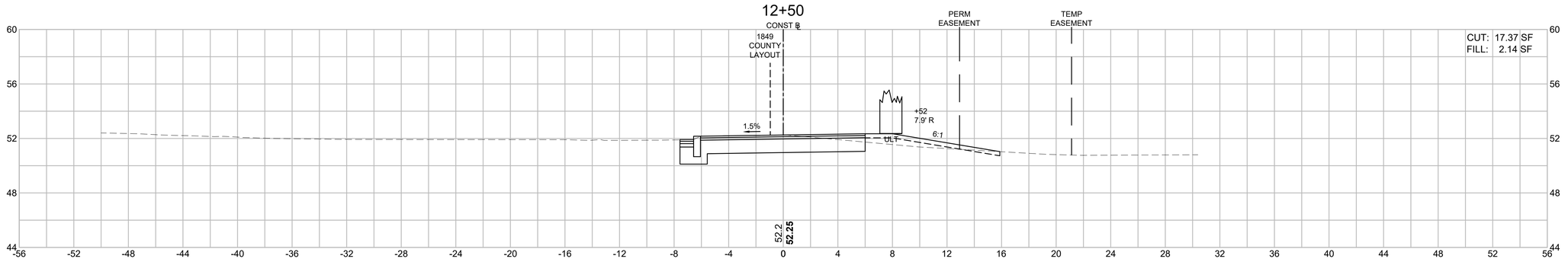

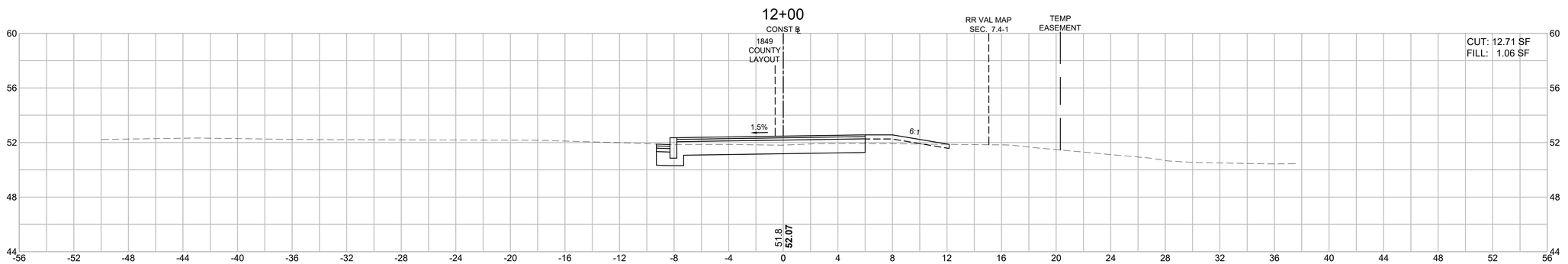

HOR. SCALE IN FEET
4 0 4 8
4 0 4 8
VER. SCALE IN FEET

LAWRENCE
LMRC RAIL TRAIL

STATE	FED. AID PROJ. NO.	SHEET NO.	TOTAL SHEETS
MA	CMQ-003S(733)X	181	245
PROJECT FILE NO.	608930		

LMRC RAIL TRAIL
CROSS SECTIONS - 9 OF 73

608930_HD11\CROSS SECTIONS\.DWG Plotted on 6-Sep-2024 8:11 AM

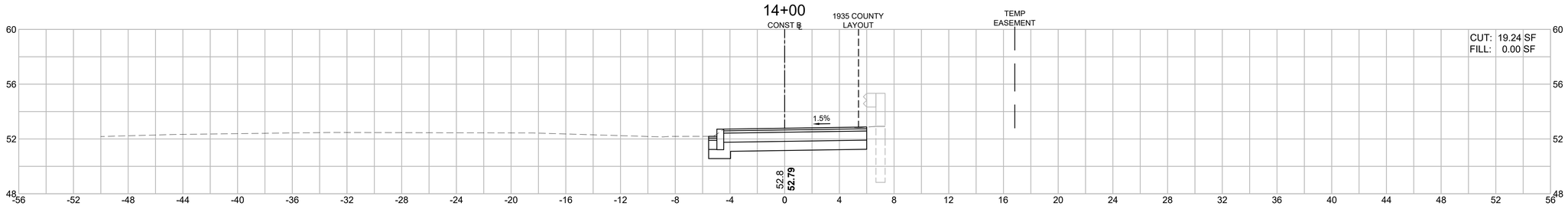

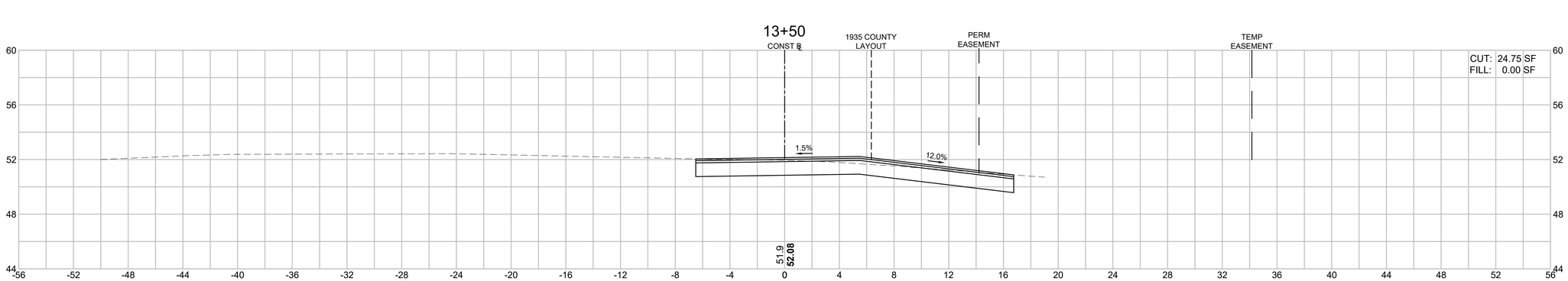

HOR. SCALE IN FEET
4 0 4 8
4 0 4 8
VER. SCALE IN FEET

LAWRENCE
LMRC RAIL TRAIL

STATE	FED. AID PROJ. NO.	SHEET NO.	TOTAL SHEETS
MA	CMQ-003S(733)X	182	245
PROJECT FILE NO.	608930		

LMRC RAIL TRAIL
CROSS SECTIONS - 10 OF 73

608930_HD11\CROSS SECTIONS\.DWG Plotted on 6-Sep-2024 8:12 AM

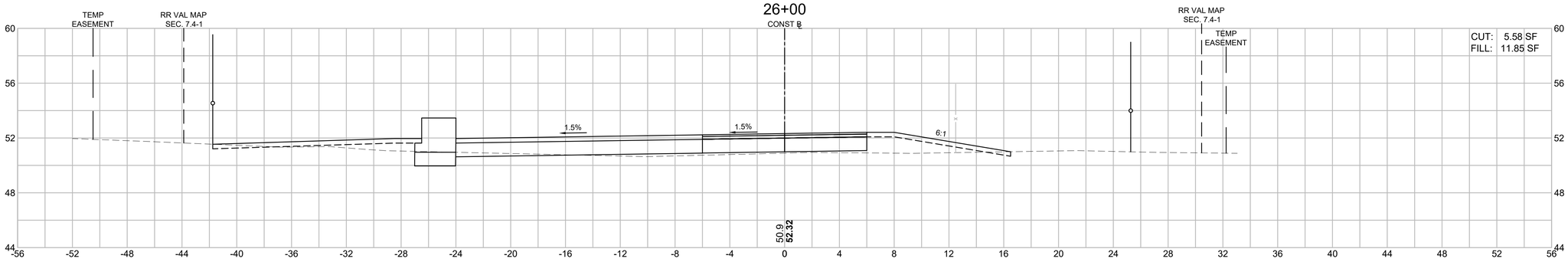

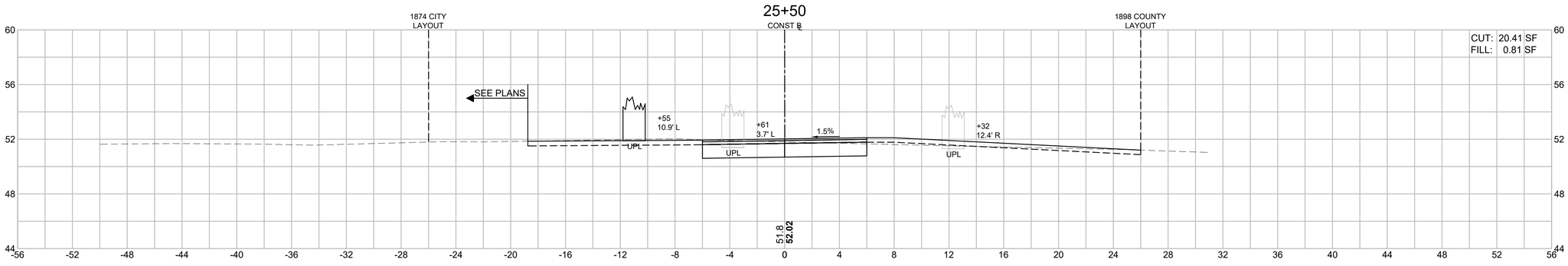

HOR. SCALE IN FEET
4 0 4 8
4 0 4 8
VER. SCALE IN FEET

LAWRENCE
LMRC RAIL TRAIL

STATE	FED. AID PROJ. NO.	SHEET NO.	TOTAL SHEETS
MA	CMQ-003S(733)X	183	245
PROJECT FILE NO.	608930		

LMRC RAIL TRAIL
CROSS SECTIONS - 11 OF 73

608930_HD11(CROSS SECTIONS).DWG Plotted on 6-Sep-2024 8:12 AM

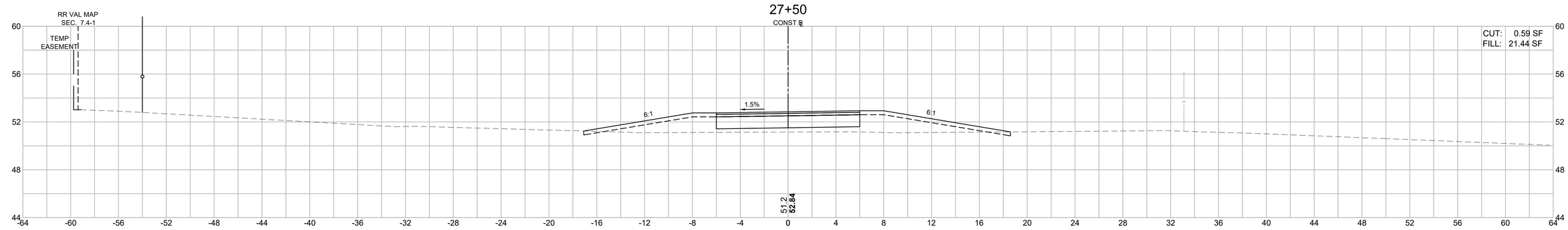

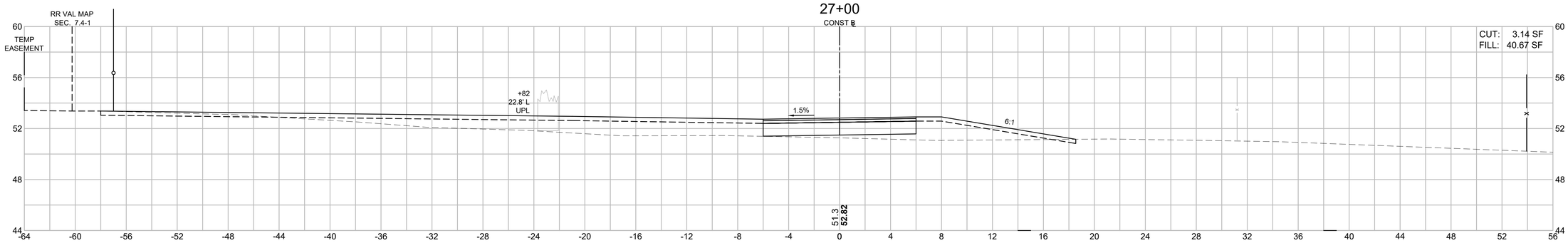

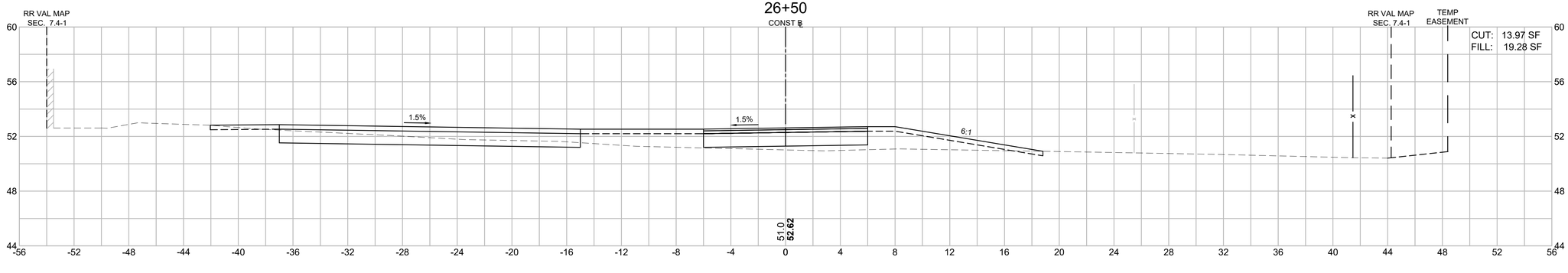

HOR. SCALE IN FEET
4 0 4 8
4 0 4 8
VER. SCALE IN FEET

LAWRENCE
LMRC RAIL TRAIL

STATE	FED. AID PROJ. NO.	SHEET NO.	TOTAL SHEETS
MA	CMQ-003S(733)X	184	245
PROJECT FILE NO.	608930		

LMRC RAIL TRAIL
CROSS SECTIONS - 12 OF 73

608930_HD11(CROSS SECTIONS).DWG Plotted on 6-Sep-2024 8:12 AM

29+00

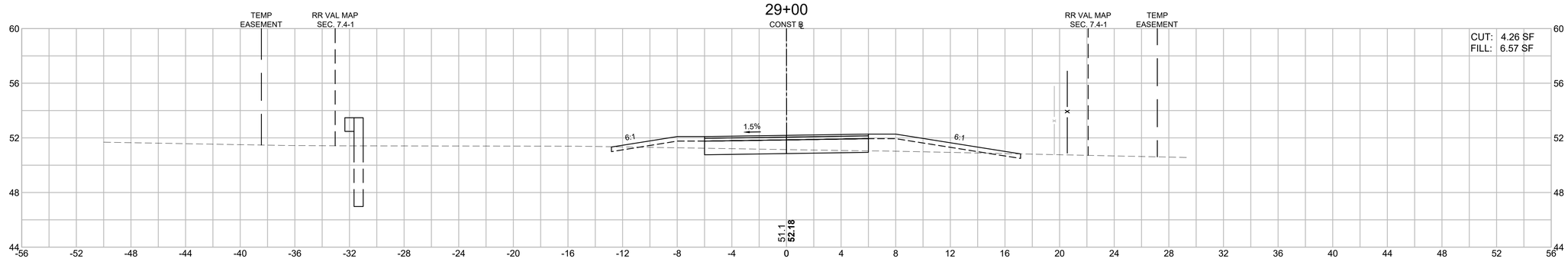

28+50

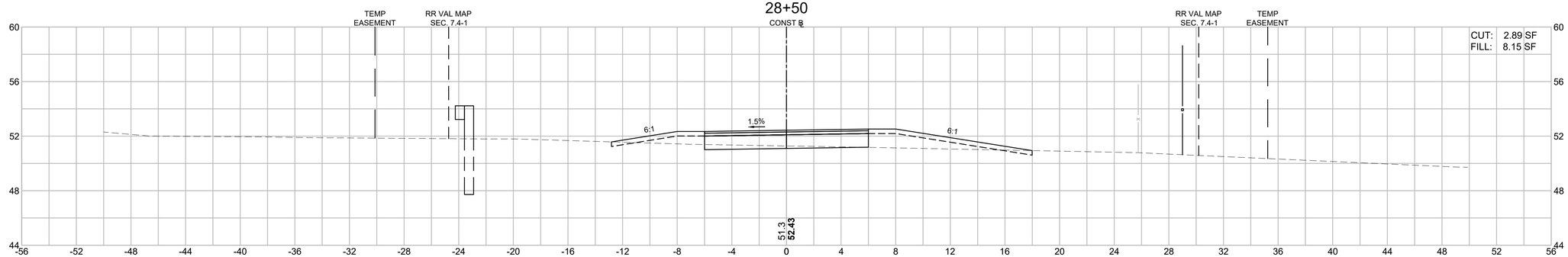

28+00

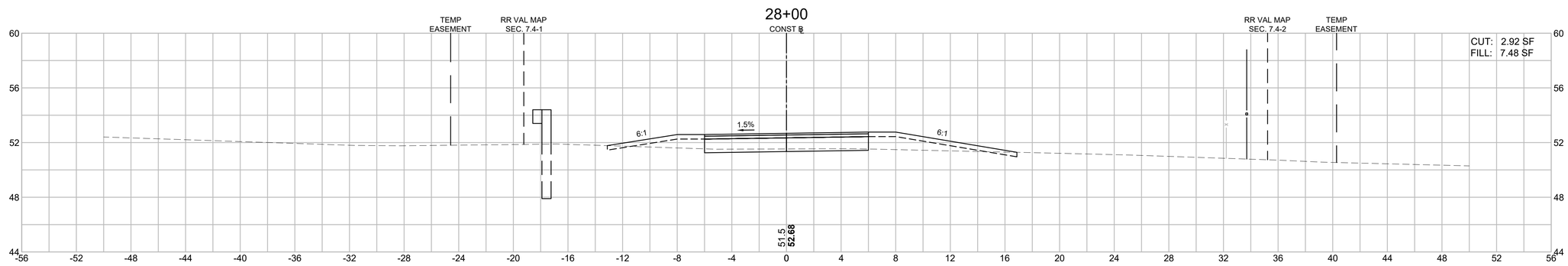

HOR. SCALE IN FEET
4 0 4 8
4 0 4 8
VER. SCALE IN FEET

LAWRENCE
LMRC RAIL TRAIL

STATE	FED. AID PROJ. NO.	SHEET NO.	TOTAL SHEETS
MA	CMQ-003S(733)X	185	245
PROJECT FILE NO.	608930		

LMRC RAIL TRAIL
CROSS SECTIONS - 13 OF 73

608930_HD11(CROSS SECTIONS).DWG Plotted on 6-Sep-2024 8:13 AM

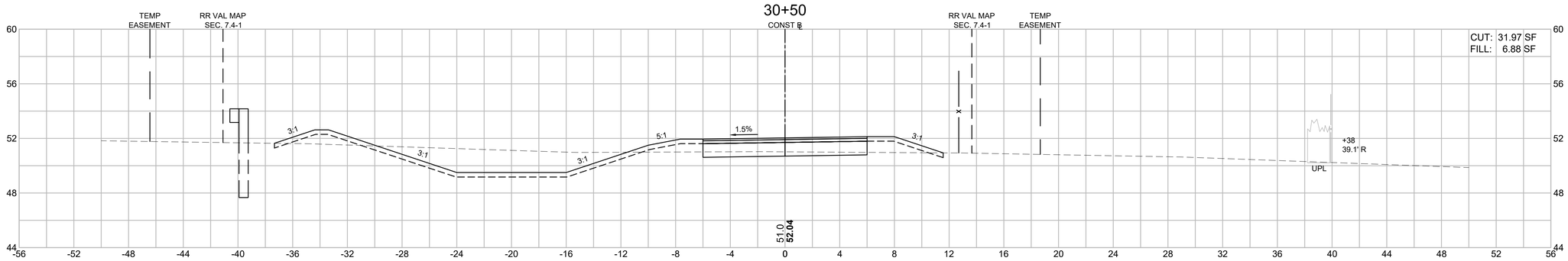

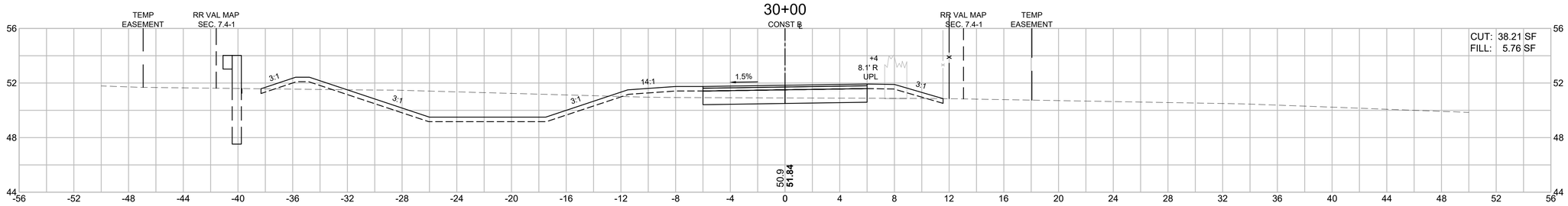

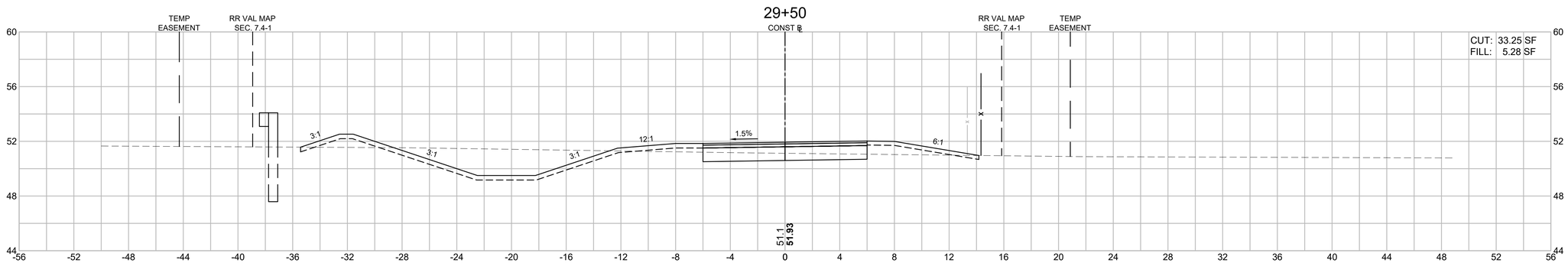

HOR. SCALE IN FEET
4 0 4 8
4 0 4 8
VER. SCALE IN FEET

LAWRENCE
LMRC RAIL TRAIL

STATE	FED. AID PROJ. NO.	SHEET NO.	TOTAL SHEETS
MA	CMQ-003S(733)X	186	245
PROJECT FILE NO.	608930		

LMRC RAIL TRAIL
CROSS SECTIONS - 14 OF 73

608930_HD11\(CROSS SECTIONS).DWG Plotted on 6-Sep-2024 8:13 AM

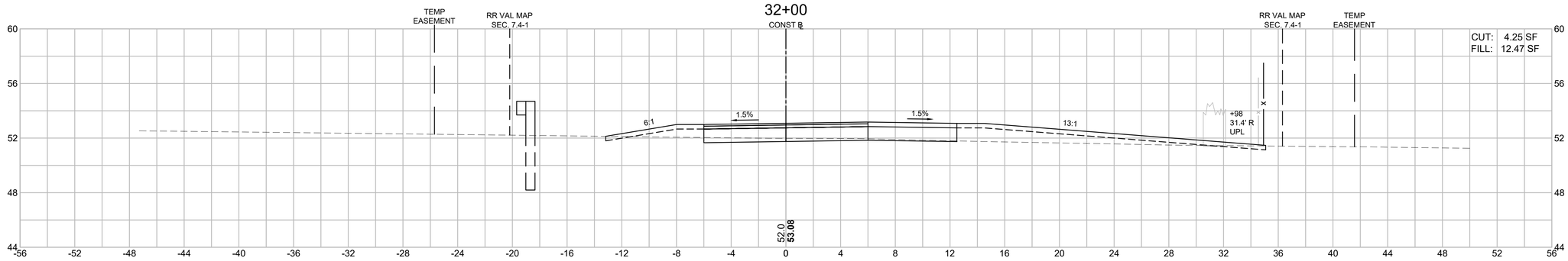

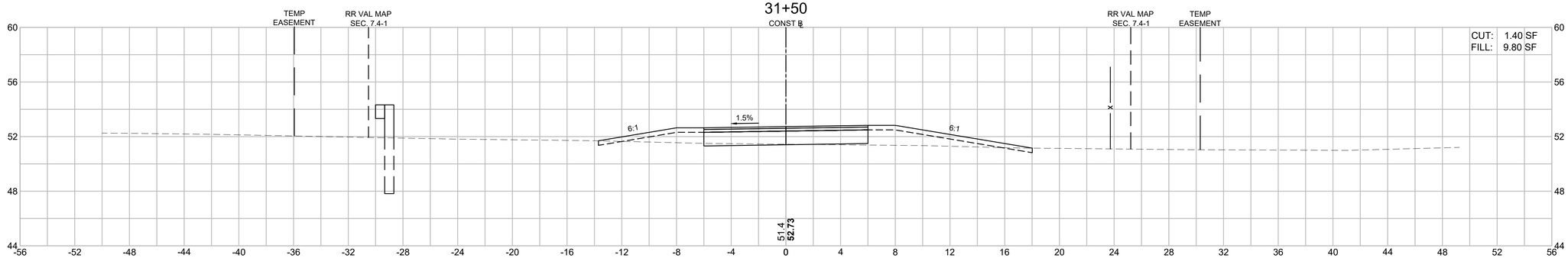

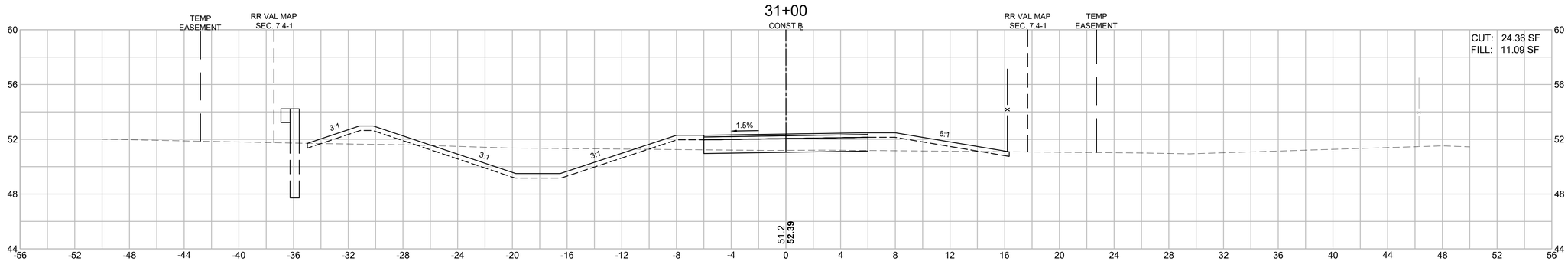

HOR. SCALE IN FEET
4 0 4 8
4 0 4 8
VER. SCALE IN FEET

LAWRENCE
LMRC RAIL TRAIL

STATE	FED. AID PROJ. NO.	SHEET NO.	TOTAL SHEETS
MA	CMQ-003S(733)X	187	245
PROJECT FILE NO.	608930		

LMRC RAIL TRAIL
CROSS SECTIONS - 15 OF 73

608930_HD11(CROSS SECTIONS).DWG Plotted on 6-Sep-2024 8:13 AM

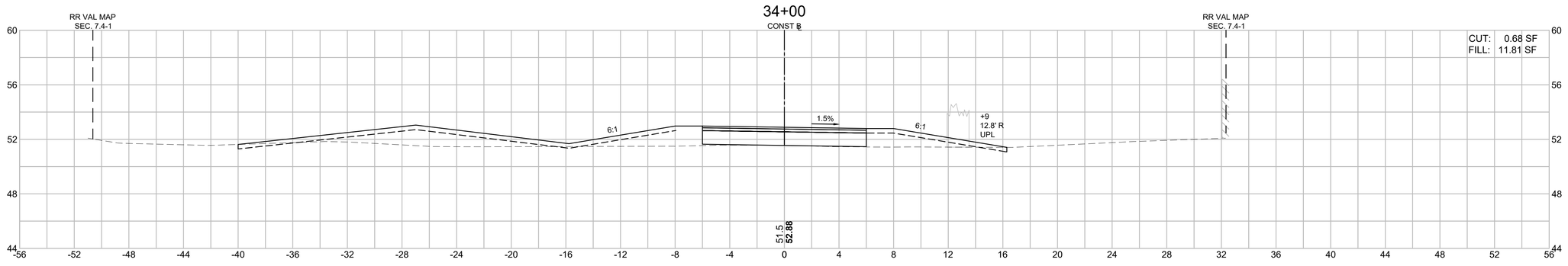

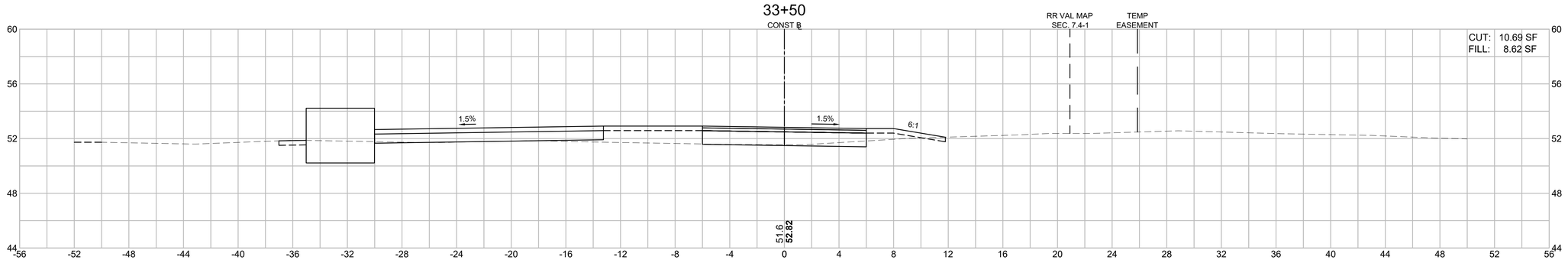

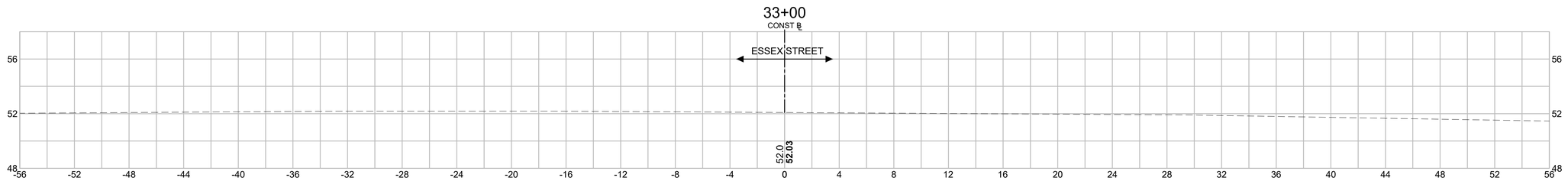

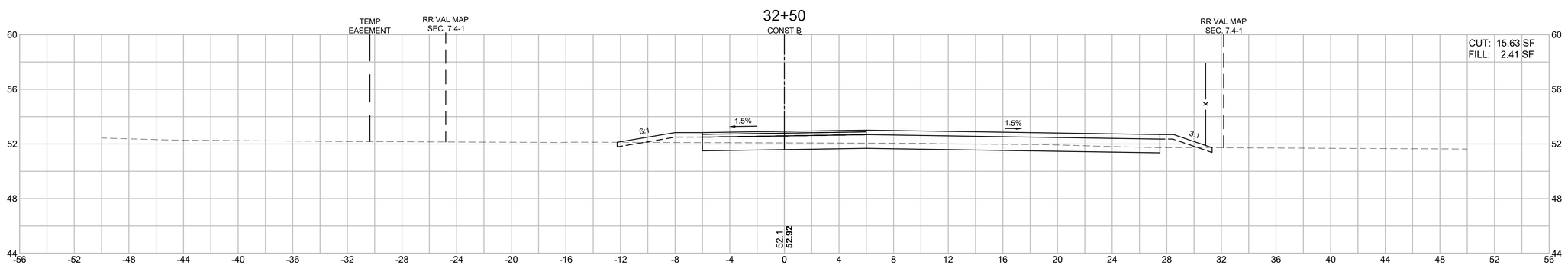

HOR. SCALE IN FEET
4 0 4 8
4 0 4 8
VER. SCALE IN FEET

LAWRENCE
LMRC RAIL TRAIL

STATE	FED. AID PROJ. NO.	SHEET NO.	TOTAL SHEETS
MA	CMQ-003S(733)X	188	245
PROJECT FILE NO.	608930		

LMRC RAIL TRAIL
CROSS SECTIONS - 16 OF 73

608930_HD11(CROSS SECTIONS).DWG Plotted on 6-Sep-2024 8:14 AM

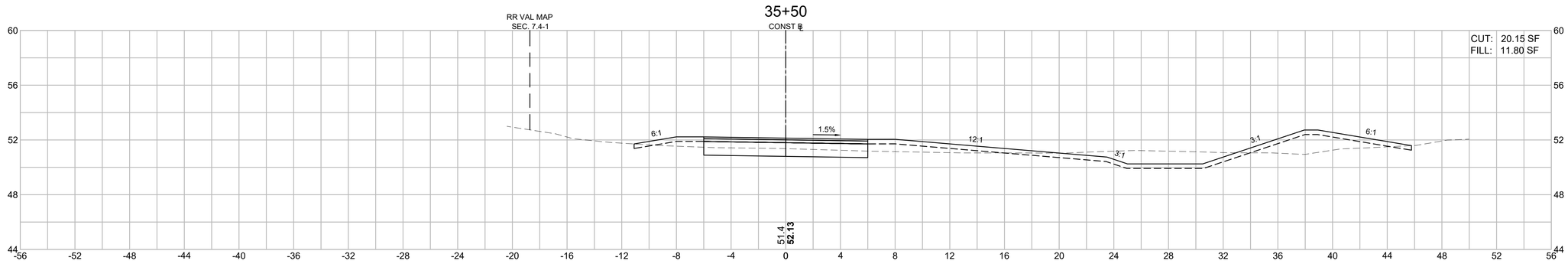

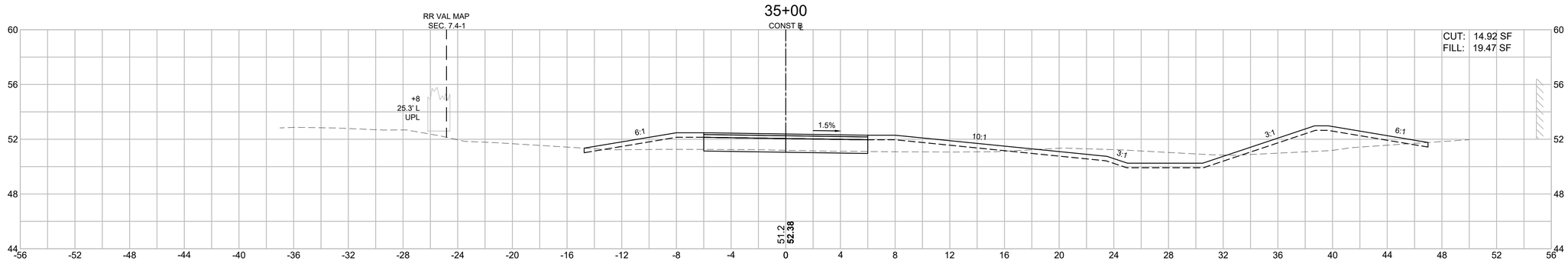

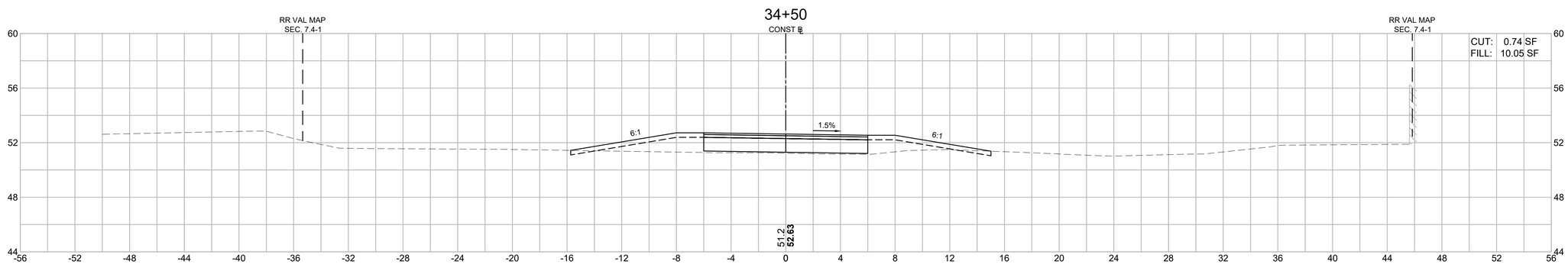

HOR. SCALE IN FEET
4 0 4 8
4 0 4 8
VER. SCALE IN FEET

LAWRENCE
LMRC RAIL TRAIL

STATE	FED. AID PROJ. NO.	SHEET NO.	TOTAL SHEETS
MA	CMQ-003S(733)X	189	245
PROJECT FILE NO.	608930		

LMRC RAIL TRAIL
CROSS SECTIONS - 17 OF 73

608930_HD11(CROSS SECTIONS).DWG Plotted on 6-Sep-2024 8:14 AM

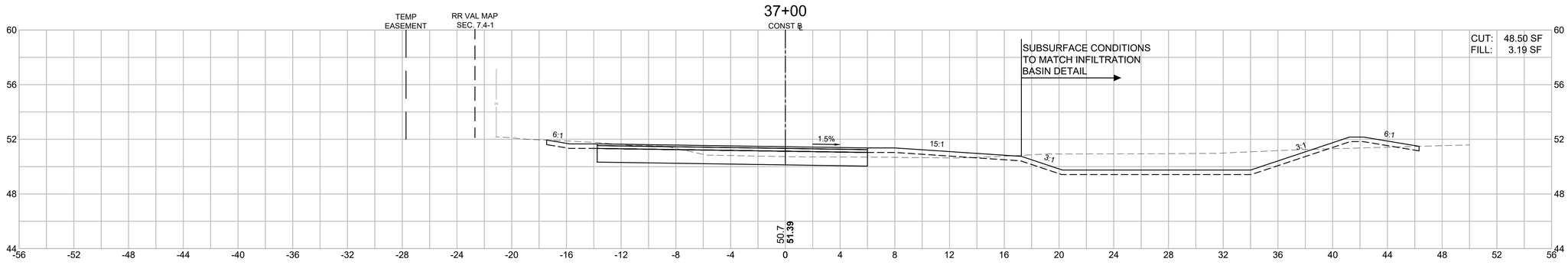

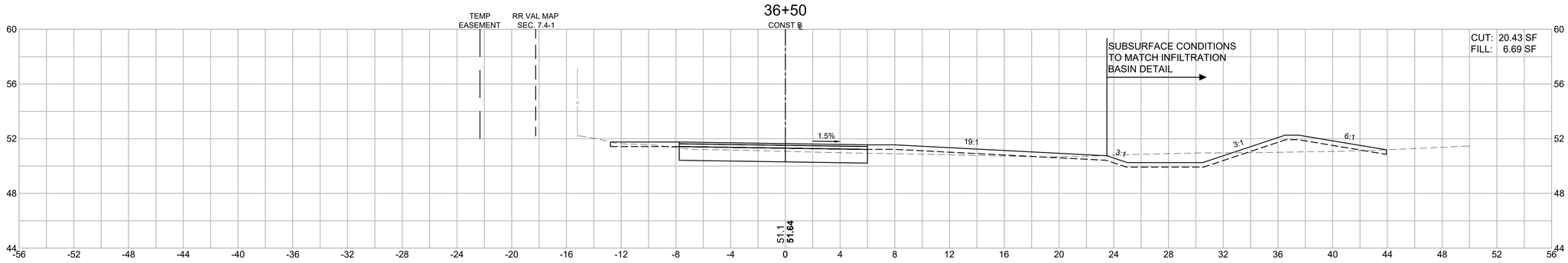

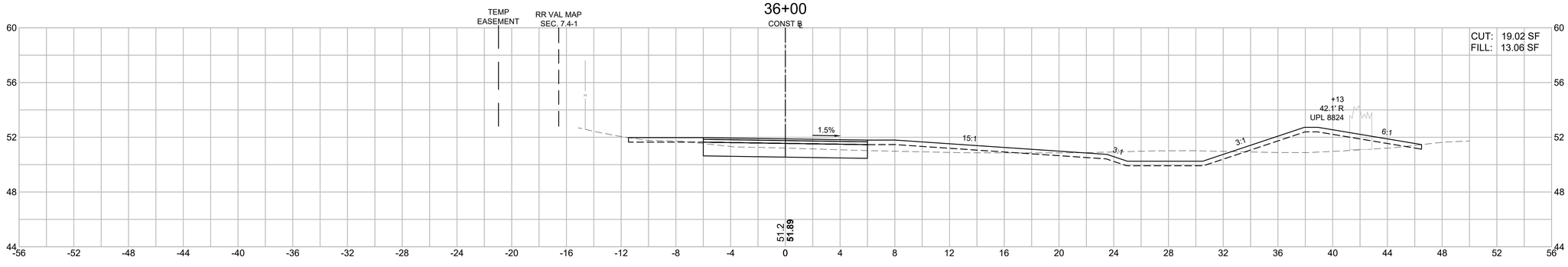

HOR. SCALE IN FEET
4 0 4 8
4 0 4 8
VER. SCALE IN FEET

LAWRENCE
LMRC RAIL TRAIL

STATE	FED. AID PROJ. NO.	SHEET NO.	TOTAL SHEETS
MA	CMQ-003S(733)X	190	245
	PROJECT FILE NO. 608930		

LMRC RAIL TRAIL
CROSS SECTIONS - 18 OF 73

608930_HD11(CROSS SECTIONS).DWG Plotted on 6-Sep-2024 8:14 AM

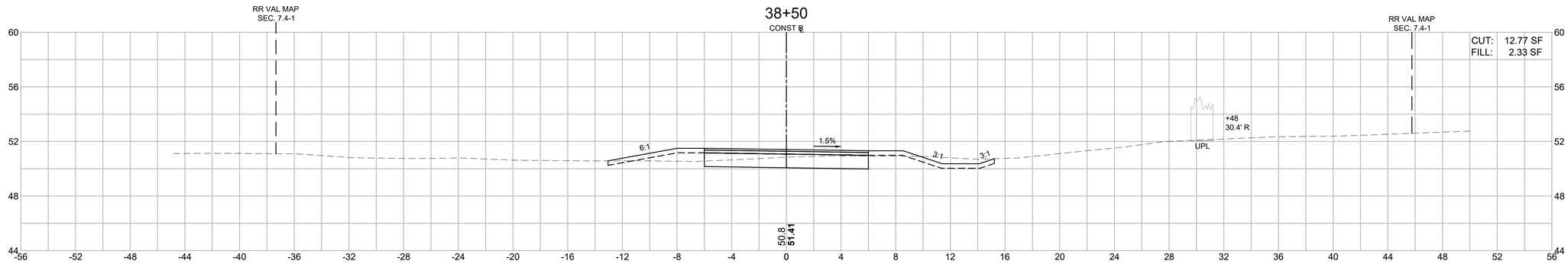

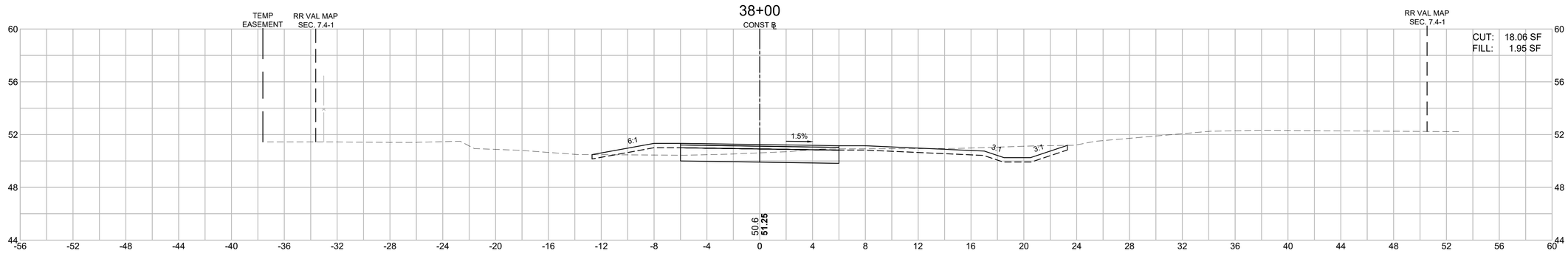

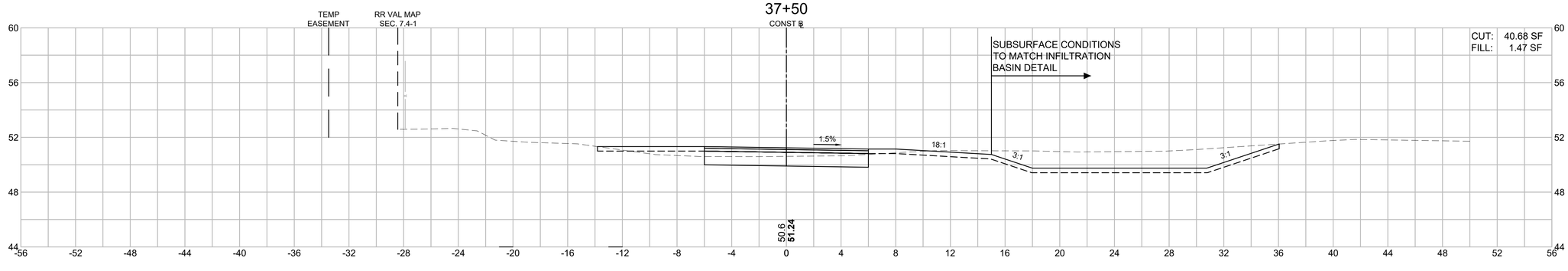

HOR. SCALE IN FEET
4 0 4 8
4 0 4 8
VER. SCALE IN FEET

LAWRENCE
LMRC RAIL TRAIL

STATE	FED. AID PROJ. NO.	SHEET NO.	TOTAL SHEETS
MA	CMQ-003S(733)X	191	245
PROJECT FILE NO.	608930		

LMRC RAIL TRAIL
CROSS SECTIONS - 19 OF 73

608930_HD11\(CROSS SECTIONS).DWG Plotted on 6-Sep-2024 8:15 AM

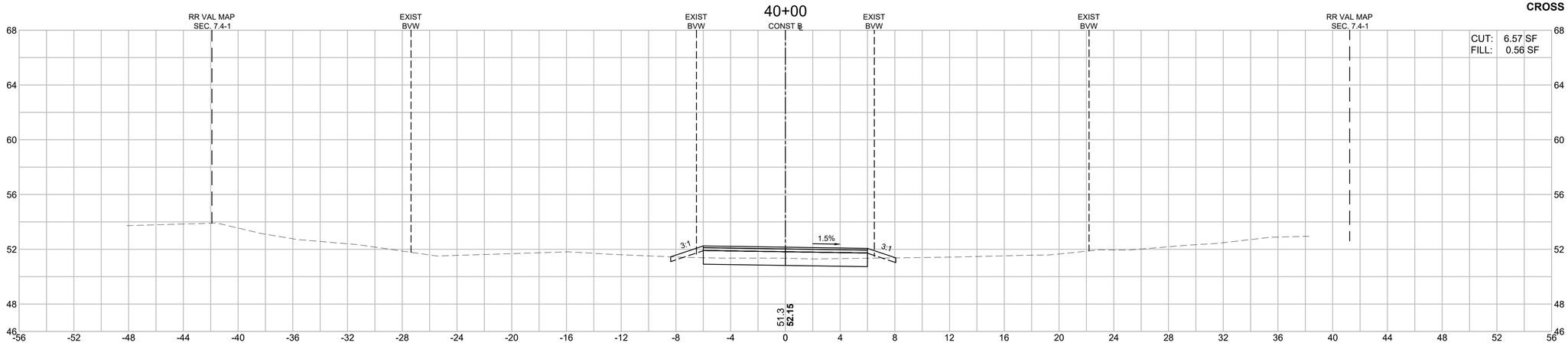

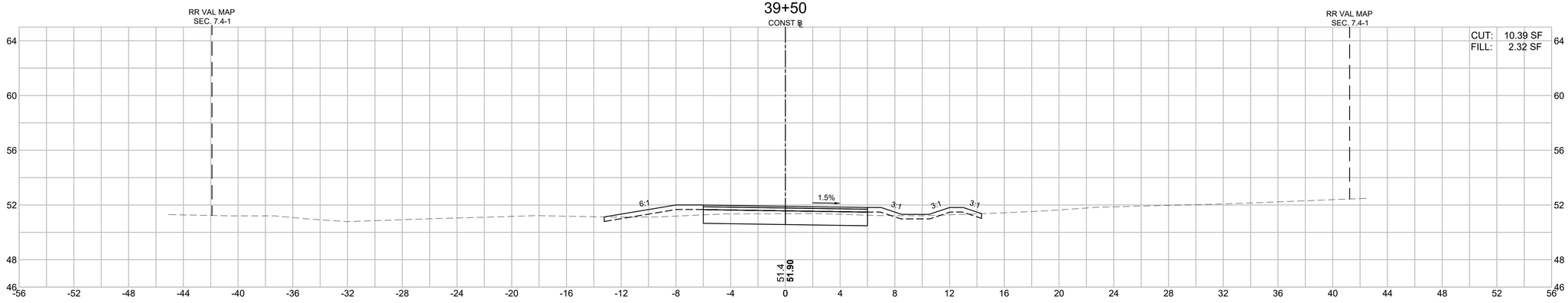

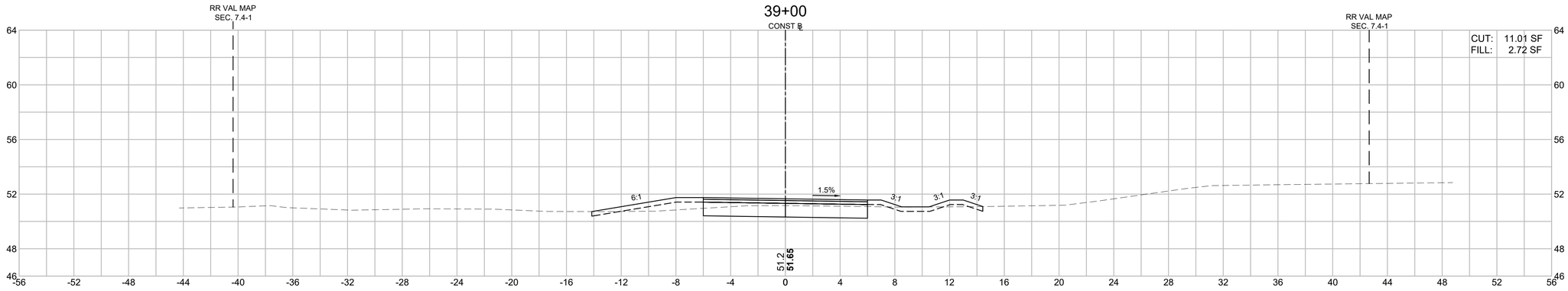

HOR. SCALE IN FEET
4 0 4 8
4 0 4 8
VER. SCALE IN FEET

LAWRENCE
LMRC RAIL TRAIL

STATE	FED. AID PROJ. NO.	SHEET NO.	TOTAL SHEETS
MA	CMQ-003S(733)X	192	245
PROJECT FILE NO.	608930		

LMRC RAIL TRAIL
CROSS SECTIONS - 20 OF 73

608930_HD11\CROSS SECTIONS\.DWG Plotted on 6-Sep-2024 8:15 AM

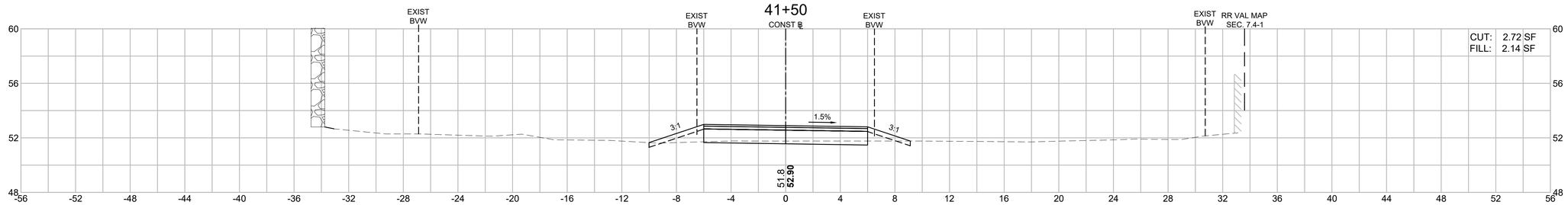

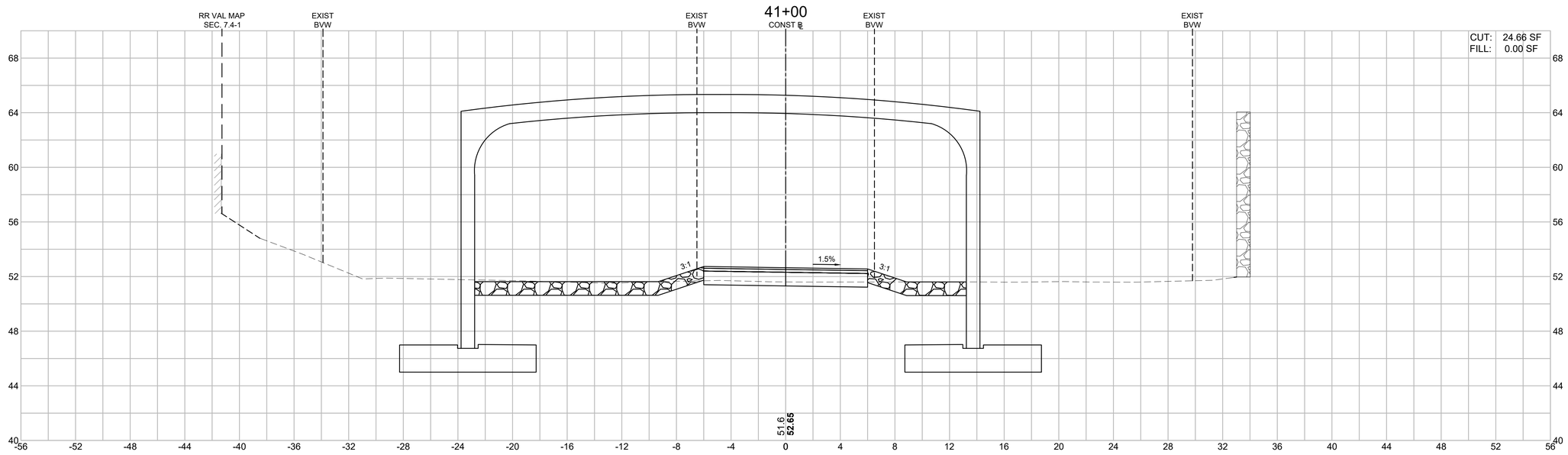

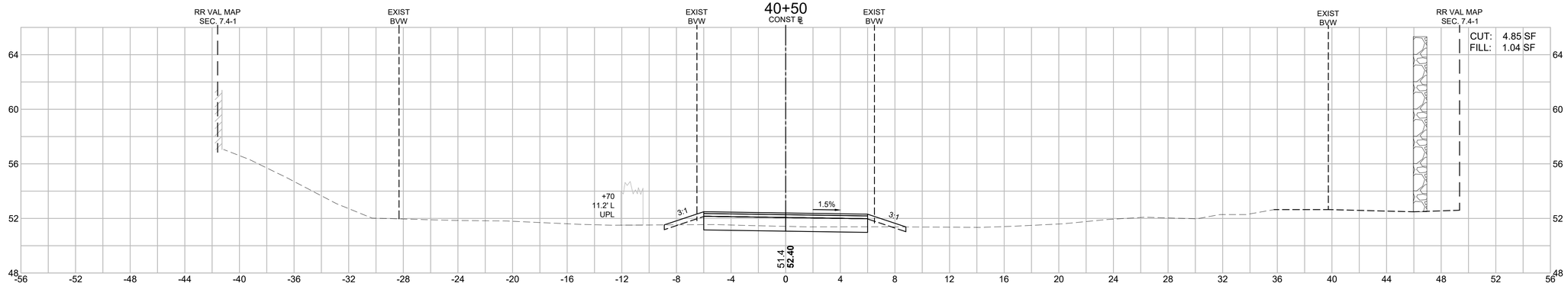

HOR. SCALE IN FEET
4 0 4 8
4 0 4 8
VER. SCALE IN FEET

LAWRENCE
LMRC RAIL TRAIL

STATE	FED. AID PROJ. NO.	SHEET NO.	TOTAL SHEETS
MA	CMQ-003S(733)X	193	245
PROJECT FILE NO.	608930		

LMRC RAIL TRAIL
CROSS SECTIONS - 21 OF 73

608930_HD11\CROSS SECTIONS\.DWG Plotted on 6-Sep-2024 8:15 AM

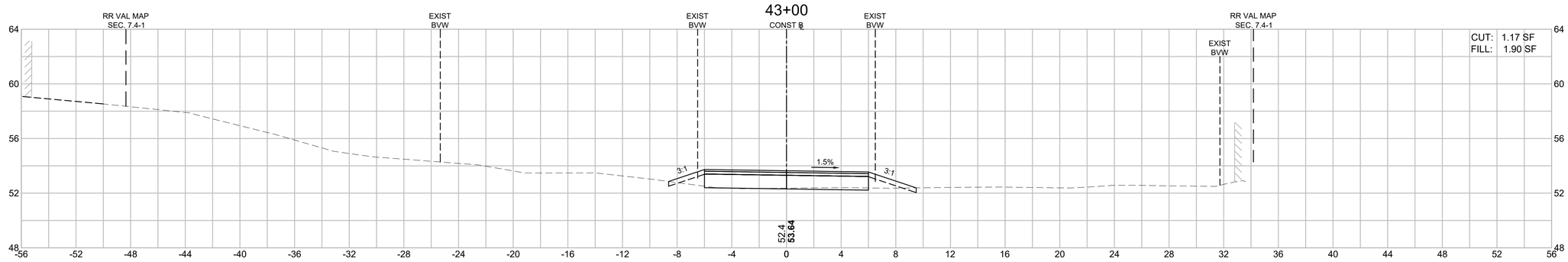

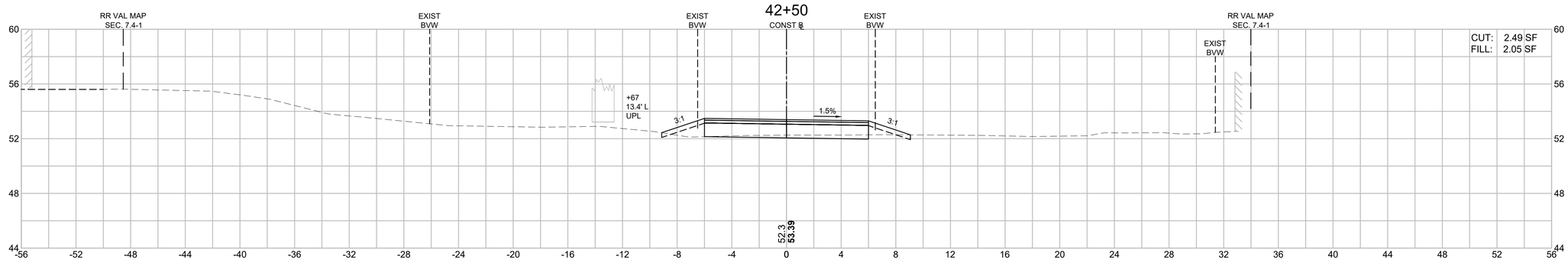

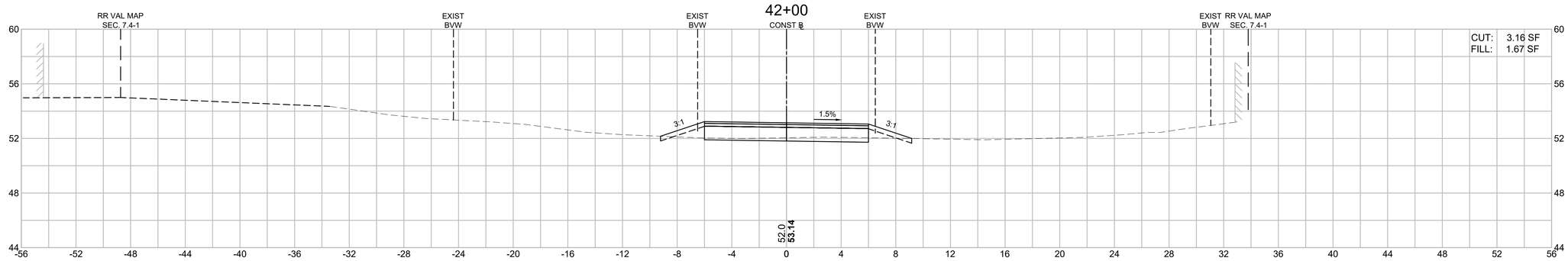

HOR. SCALE IN FEET
4 0 4 8
4 0 4 8
VER. SCALE IN FEET

LAWRENCE
LMRC RAIL TRAIL

STATE	FED. AID PROJ. NO.	SHEET NO.	TOTAL SHEETS
MA	CMQ-003S(733)X	194	245
PROJECT FILE NO.	608930		

LMRC RAIL TRAIL
CROSS SECTIONS - 22 OF 73

608930_HD11\CROSS SECTIONS\.DWG Plotted on 6-Sep-2024 8:16 AM

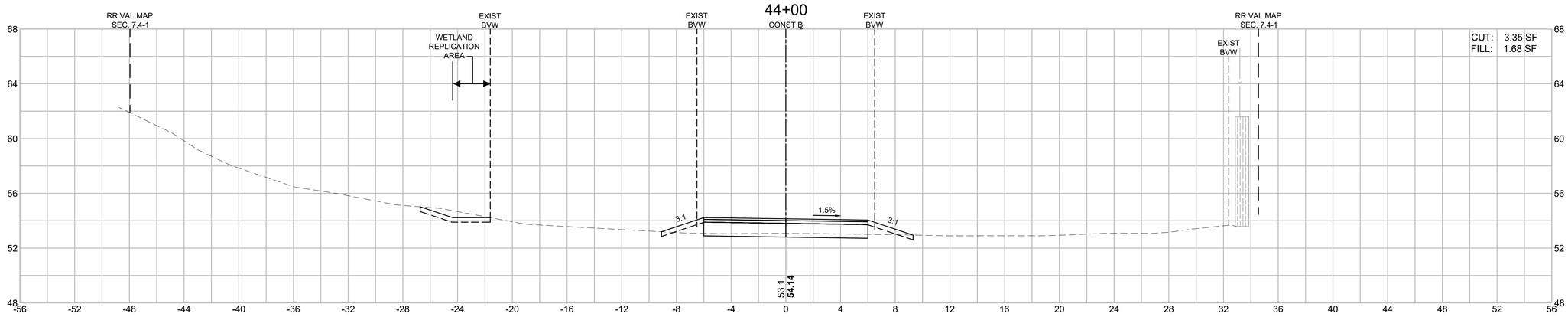

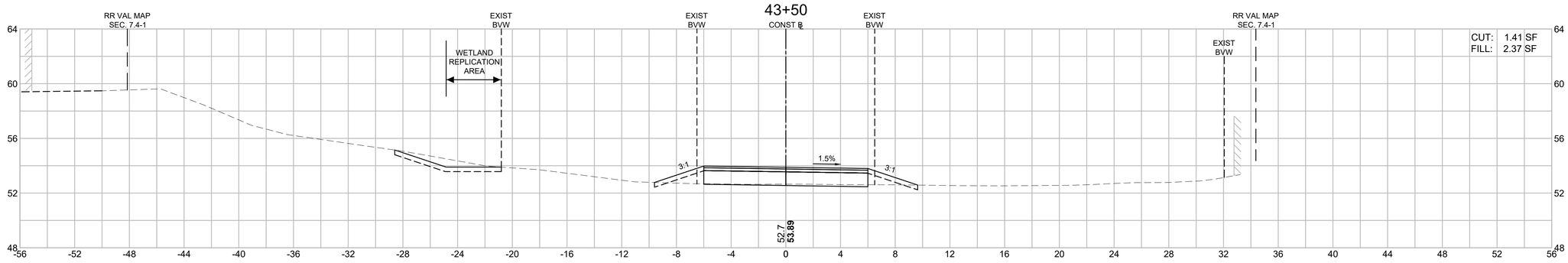

HOR. SCALE IN FEET
4 0 4 8
4 0 4 8
VER. SCALE IN FEET

LAWRENCE
LMRC RAIL TRAIL

STATE	FED. AID PROJ. NO.	SHEET NO.	TOTAL SHEETS
MA	CMQ-003S(733)X	195	245
PROJECT FILE NO.	608930		

LMRC RAIL TRAIL
CROSS SECTIONS - 23 OF 73

608930_HD11\CROSS SECTIONS.DWG Plotted on 6-Sep-2024 8:16 AM

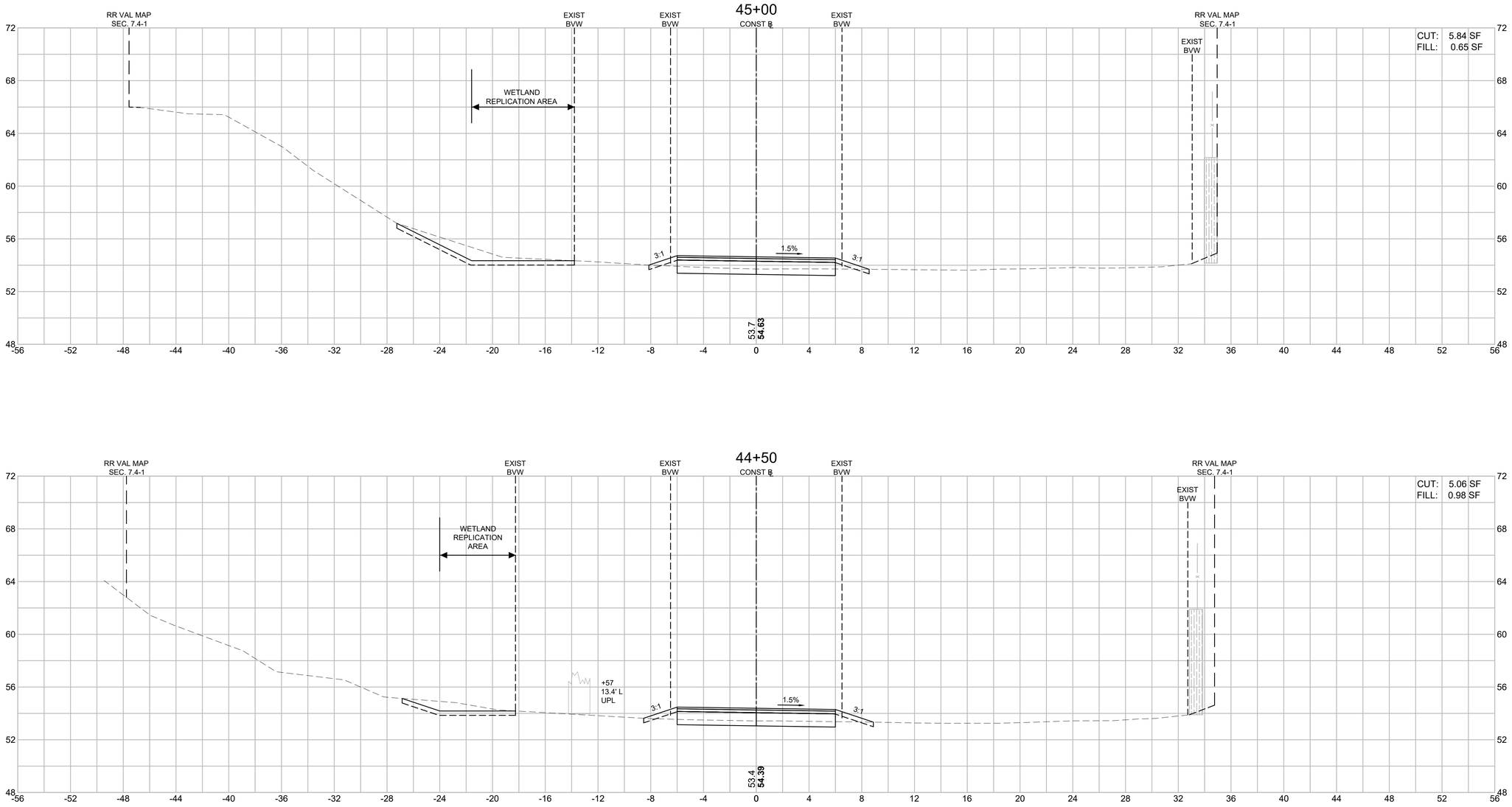

HOR. SCALE IN FEET
4 0 4 8
4 0 4 8
VER. SCALE IN FEET

LAWRENCE
LMRC RAIL TRAIL

STATE	FED. AID PROJ. NO.	SHEET NO.	TOTAL SHEETS
MA	CMQ-003S(733)X	196	245
PROJECT FILE NO.	608930		

LMRC RAIL TRAIL
CROSS SECTIONS - 24 OF 73

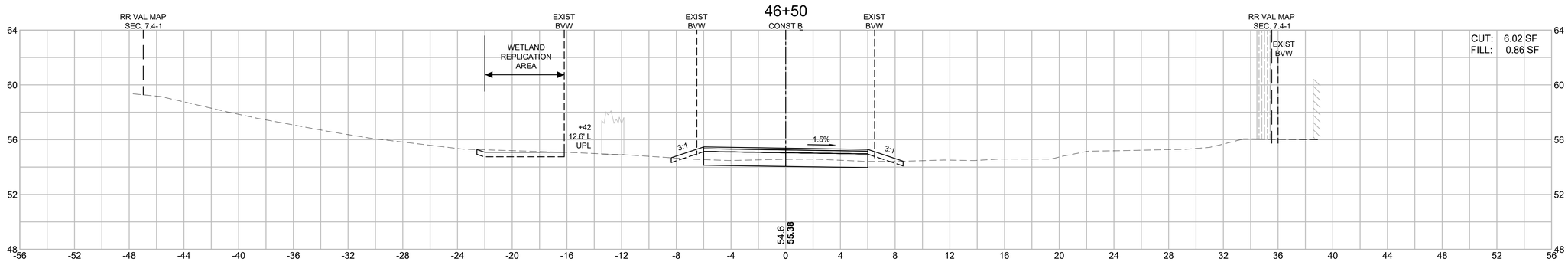

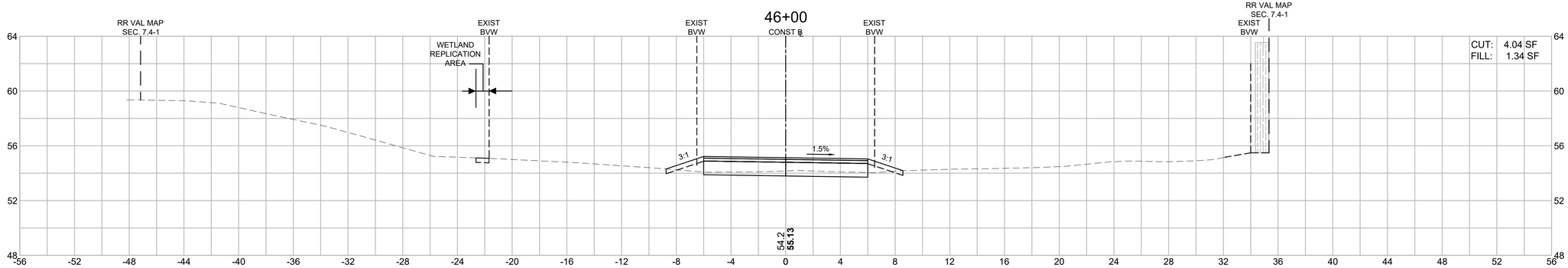

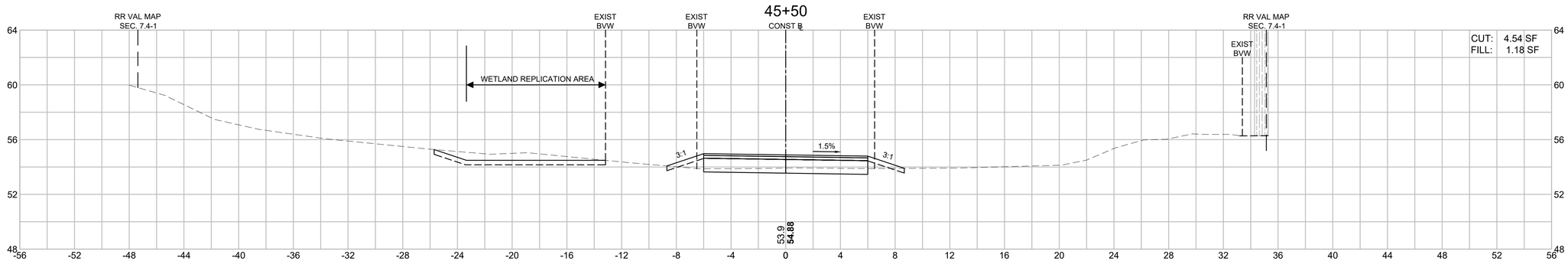

HOR. SCALE IN FEET
4 0 4 8
4 0 4 8
VER. SCALE IN FEET

608930_HD11(CROSS SECTIONS).DWG Plotted on 6-Sep-2024 8:16 AM

LAWRENCE
LMRC RAIL TRAIL

STATE	FED. AID PROJ. NO.	SHEET NO.	TOTAL SHEETS
MA	CMQ-003S(733)X	197	245
PROJECT FILE NO.	608930		

LMRC RAIL TRAIL
CROSS SECTIONS - 25 OF 73

608930_HD11\CROSS SECTIONS\.DWG Plotted on 6-Sep-2024 8:17 AM

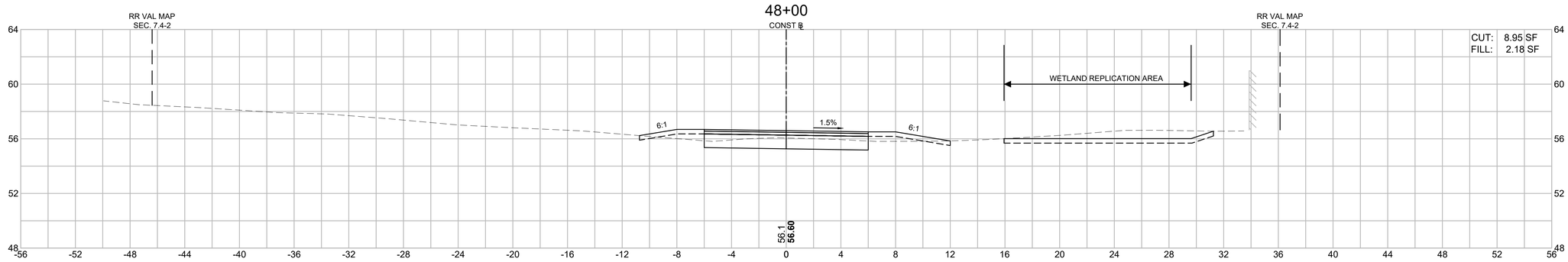

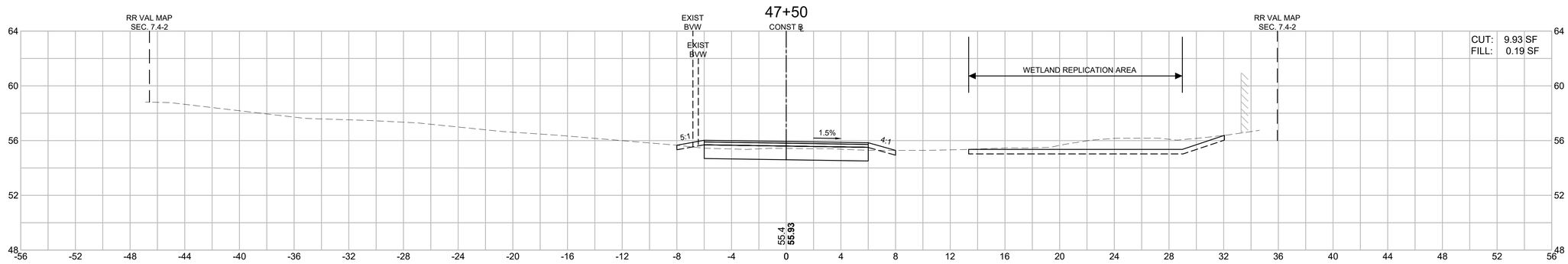

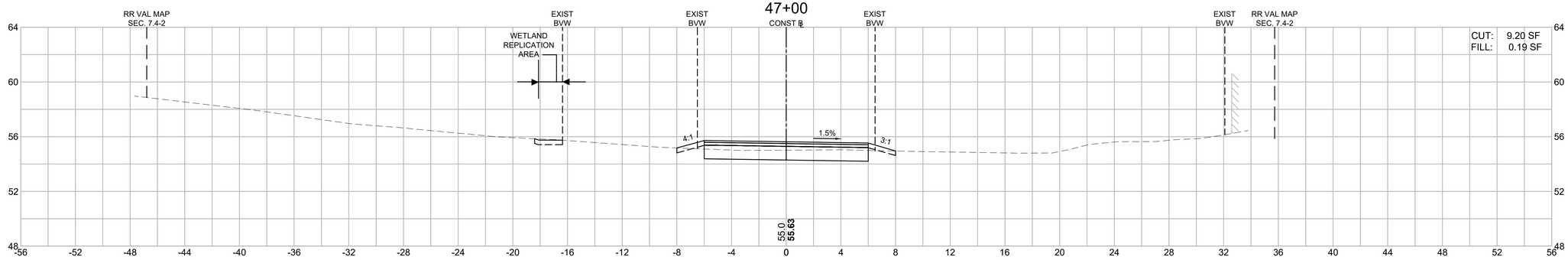

HOR. SCALE IN FEET
4 0 4 8
4 0 4 8
VER. SCALE IN FEET

LAWRENCE
LMRC RAIL TRAIL

STATE	FED. AID PROJ. NO.	SHEET NO.	TOTAL SHEETS
MA	CMQ-003S(733)X	198	245
PROJECT FILE NO.	608930		

LMRC RAIL TRAIL
CROSS SECTIONS - 26 OF 73

608930_HD11\CROSS SECTIONS\.DWG Plotted on 6-Sep-2024 8:17 AM

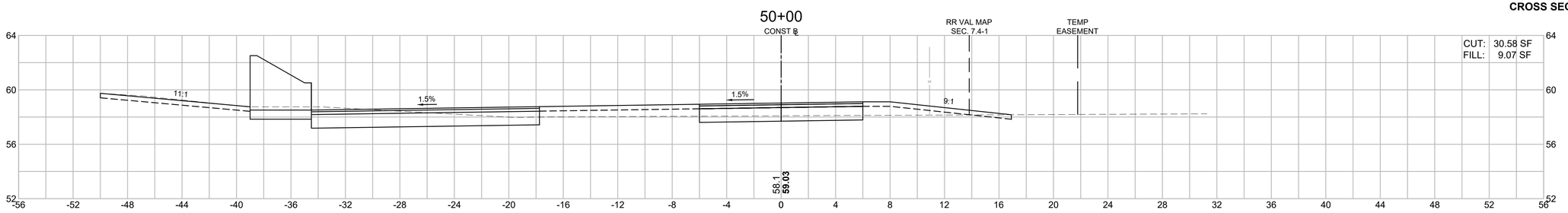

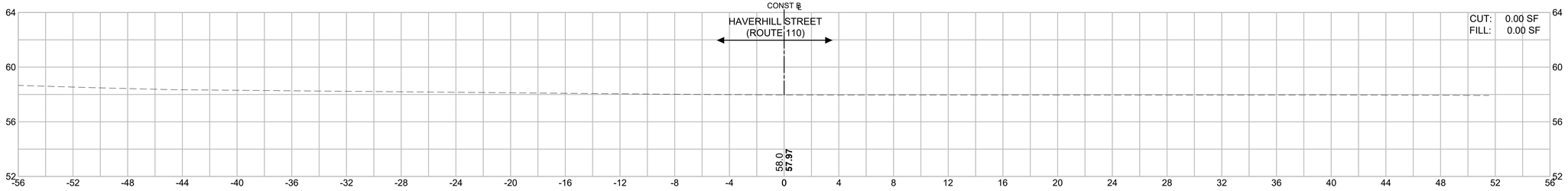

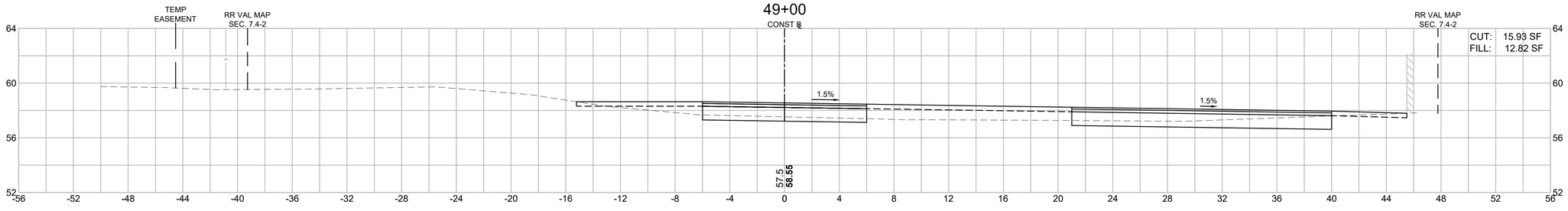

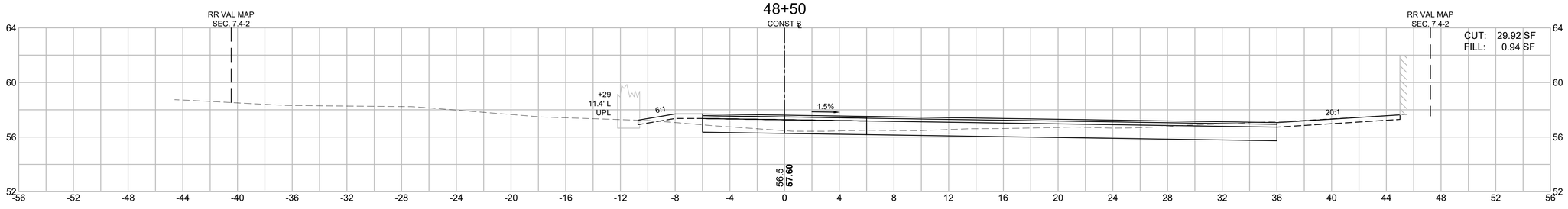

HOR. SCALE IN FEET
4 0 4 8
4 0 4 8
VER. SCALE IN FEET

LAWRENCE
LMRC RAIL TRAIL

STATE	FED. AID PROJ. NO.	SHEET NO.	TOTAL SHEETS
MA	CMQ-003S(733)X	199	245
PROJECT FILE NO.	608930		

LMRC RAIL TRAIL
CROSS SECTIONS - 27 OF 73

608930_HD11(CROSS SECTIONS).DWG Plotted on 6-Sep-2024 8:17 AM

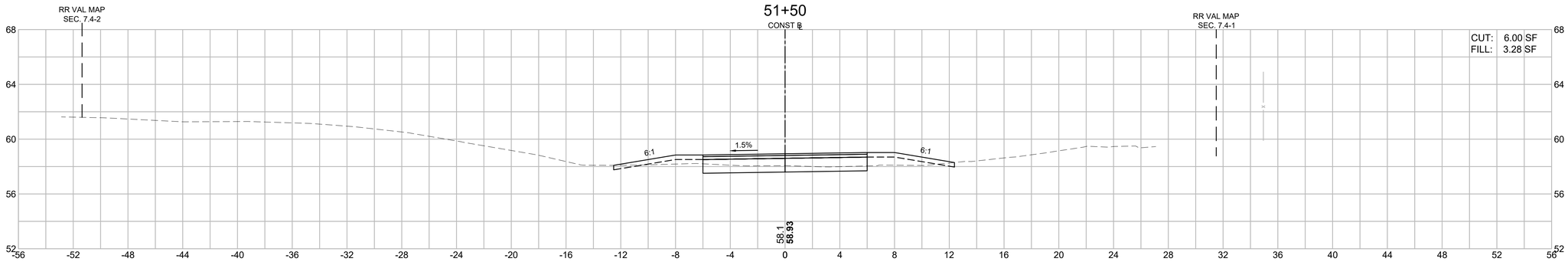

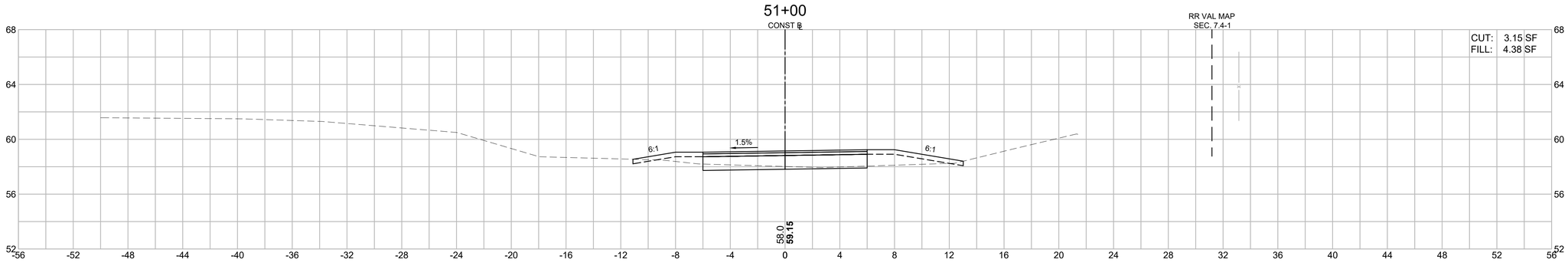

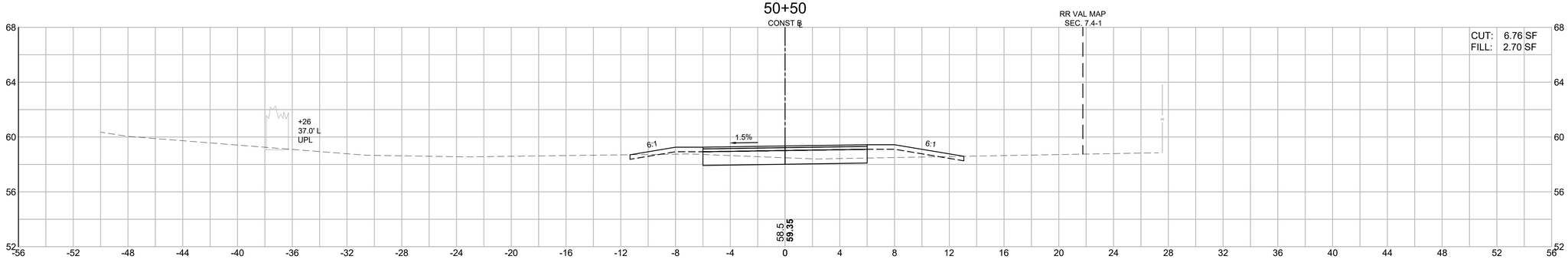

HOR. SCALE IN FEET
4 0 4 8
4 0 4 8
VER. SCALE IN FEET

LAWRENCE
LMRC RAIL TRAIL

STATE	FED. AID PROJ. NO.	SHEET NO.	TOTAL SHEETS
MA	CMQ-003S(733)X	200	245
PROJECT FILE NO.	608930		

LMRC RAIL TRAIL
CROSS SECTIONS - 28 OF 73

608930_HD11\CROSS SECTIONS\.DWG Plotted on 6-Sep-2024 8:18 AM

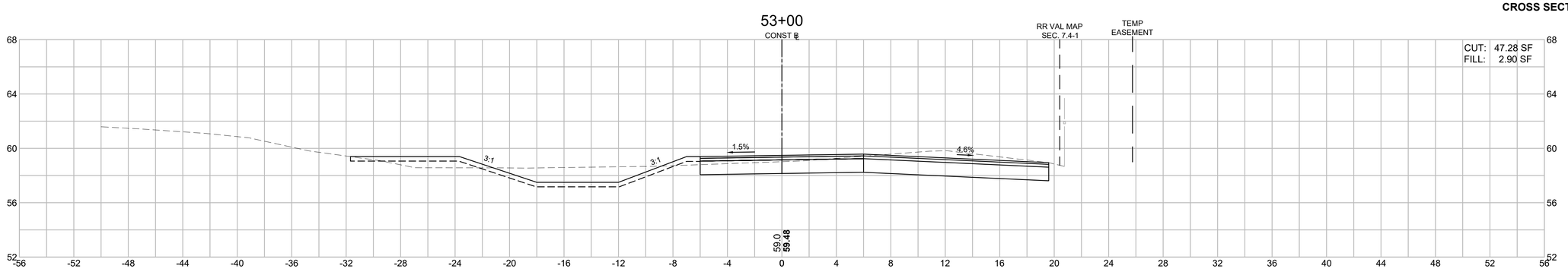

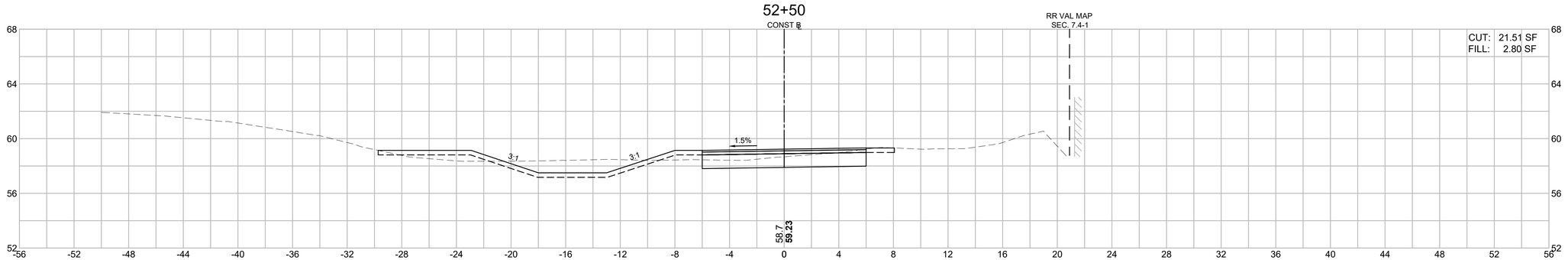

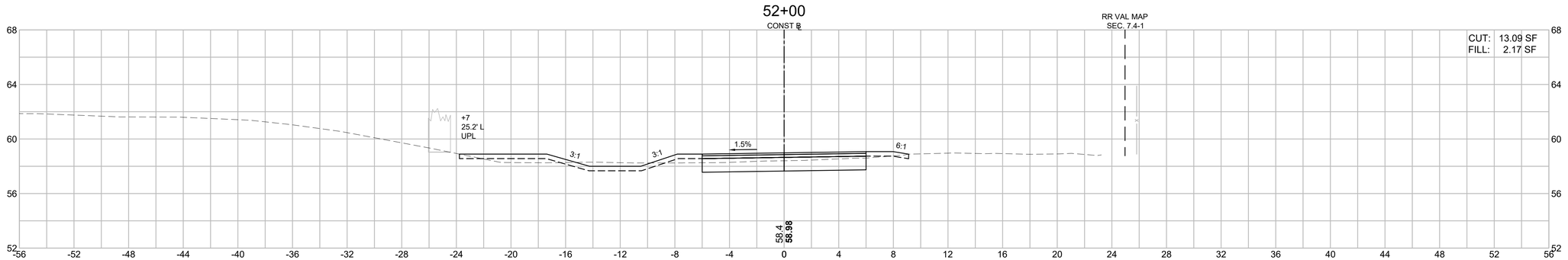

HOR. SCALE IN FEET
4 0 4 8
4 0 4 8
VER. SCALE IN FEET

LAWRENCE
LMRC RAIL TRAIL

STATE	FED. AID PROJ. NO.	SHEET NO.	TOTAL SHEETS
MA	CMQ-003S(733)X	201	245
PROJECT FILE NO.	608930		

LMRC RAIL TRAIL
CROSS SECTIONS - 29 OF 73

608930_HD11(CROSS SECTIONS).DWG Plotted on 6-Sep-2024 8:18 AM

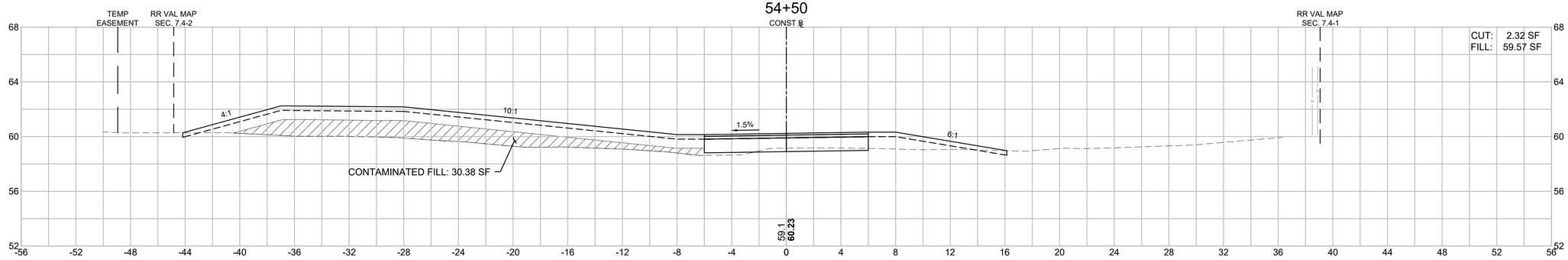

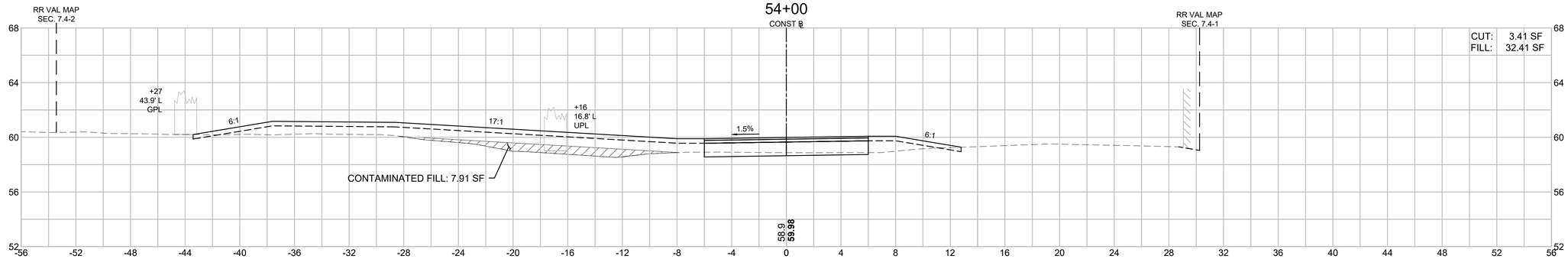

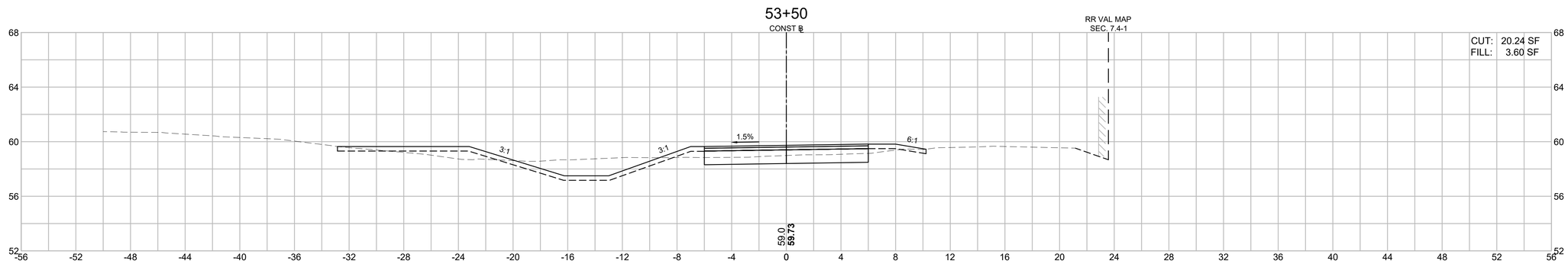

HOR. SCALE IN FEET
4 0 4 8
4 0 4 8
VER. SCALE IN FEET

LAWRENCE
LMRC RAIL TRAIL

STATE	FED. AID PROJ. NO.	SHEET NO.	TOTAL SHEETS
MA	CMQ-003S(733)X	202	245
PROJECT FILE NO.	608930		

LMRC RAIL TRAIL
CROSS SECTIONS - 30 OF 73

608930_HD11(CROSS SECTIONS).DWG Plotted on 6-Sep-2024 8:18 AM

56+00

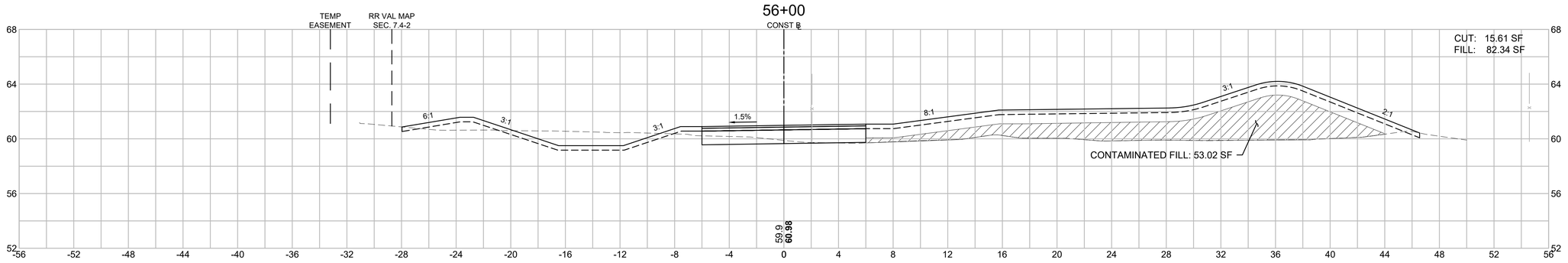

55+50

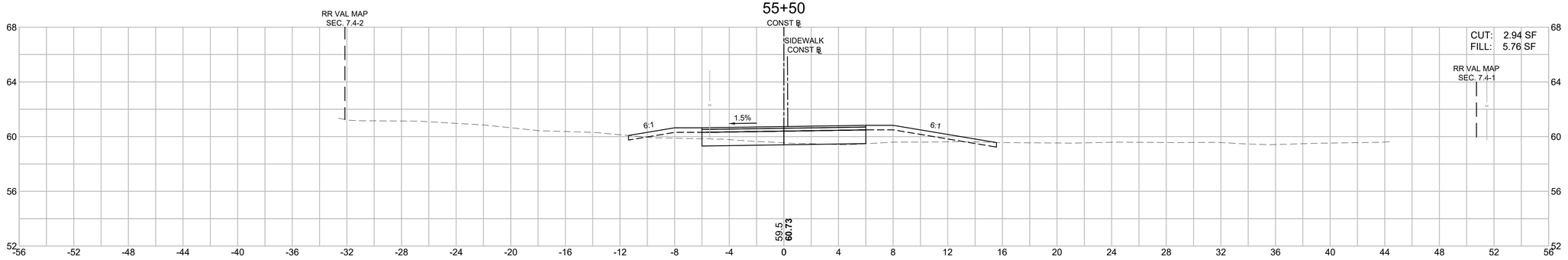

55+00

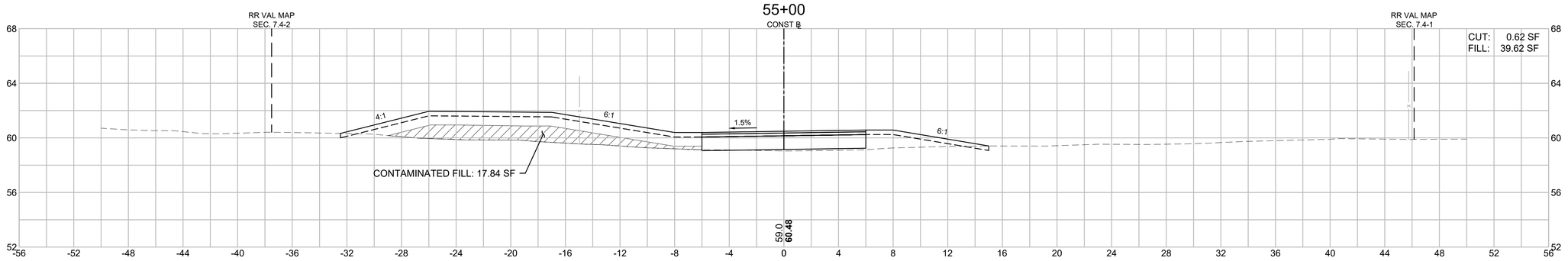

HOR. SCALE IN FEET
4 0 4 8
4 0 4 8
VER. SCALE IN FEET

LAWRENCE
LMRC RAIL TRAIL

STATE	FED. AID PROJ. NO.	SHEET NO.	TOTAL SHEETS
MA	CMQ-003S(733)X	203	245
PROJECT FILE NO.	608930		

LMRC RAIL TRAIL
CROSS SECTIONS - 31 OF 73

608930_HD11(CROSS SECTIONS).DWG Plotted on 6-Sep-2024 8:19 AM

57+50

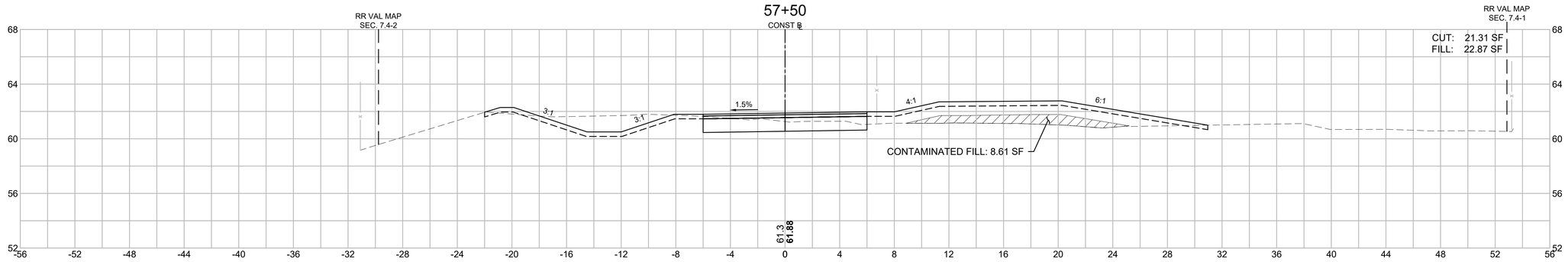

57+00

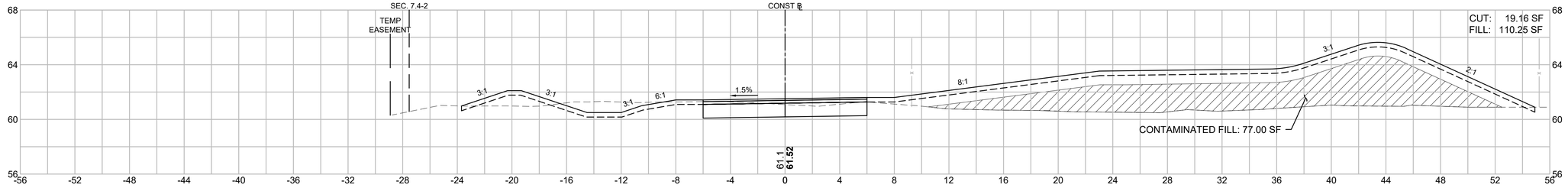

56+50

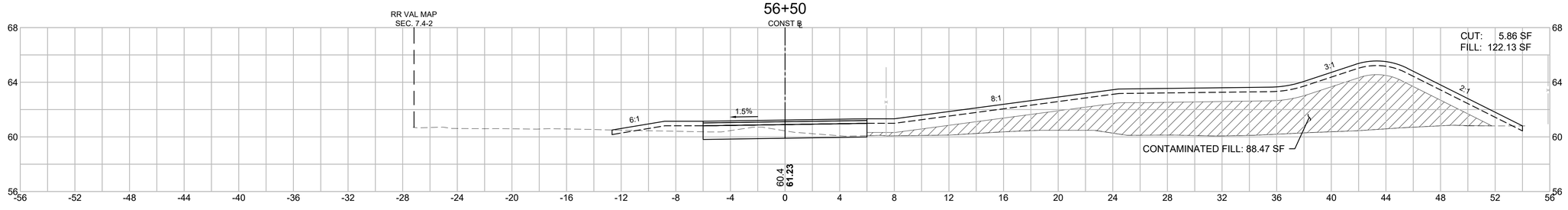

HOR. SCALE IN FEET
4 0 4 8
4 0 4 8
VER. SCALE IN FEET

LAWRENCE
LMRC RAIL TRAIL

STATE	FED. AID PROJ. NO.	SHEET NO.	TOTAL SHEETS
MA	CMQ-003S(733)X	204	245
PROJECT FILE NO.	608930		

LMRC RAIL TRAIL
CROSS SECTIONS - 32 OF 73

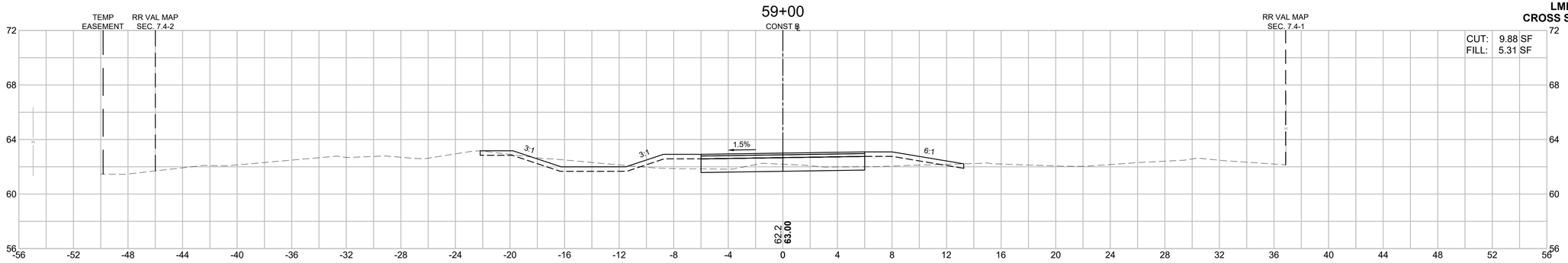

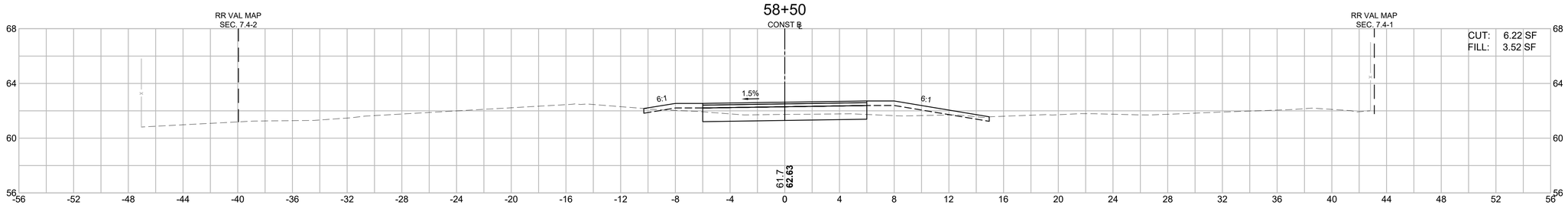

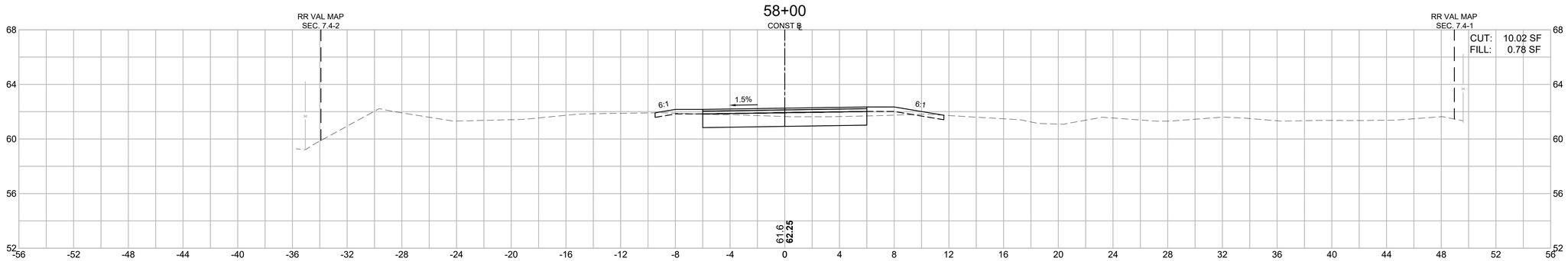

HOR. SCALE IN FEET
4 0 4 8
4 0 4 8
VER. SCALE IN FEET

608930_HD11(CROSS SECTIONS).DWG Plotted on 6-Sep-2024 8:19 AM

LAWRENCE
LMRC RAIL TRAIL

STATE	FED. AID PROJ. NO.	SHEET NO.	TOTAL SHEETS
MA	CMQ-003S(733)X	205	245
PROJECT FILE NO.	608930		

LMRC RAIL TRAIL
CROSS SECTIONS - 33 OF 73

Plotted on 6-Sep-2024 8:19 AM
608930_HD11\(CROSS SECTIONS).DWG

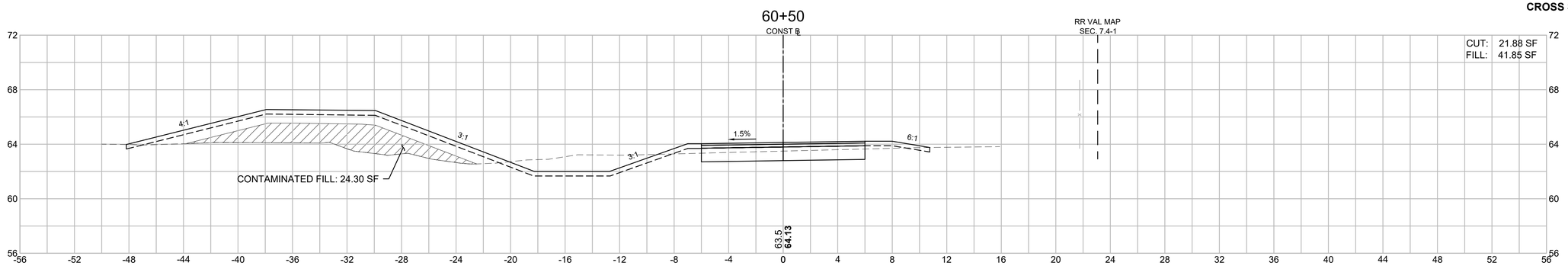

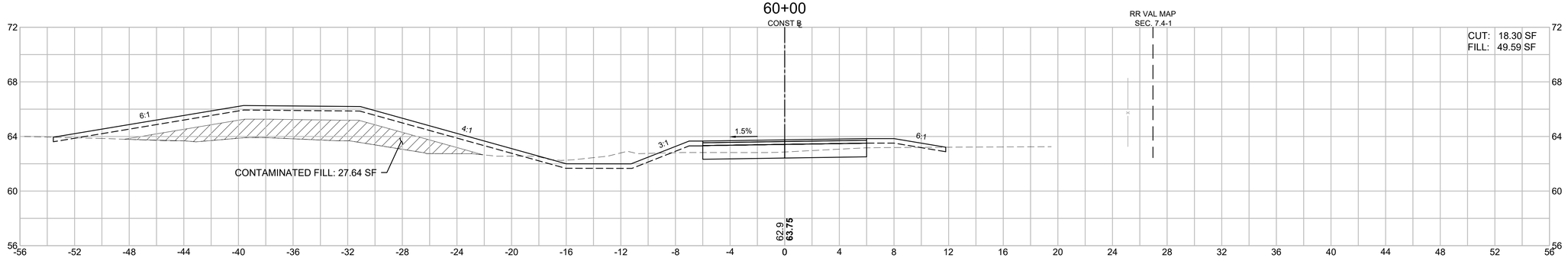

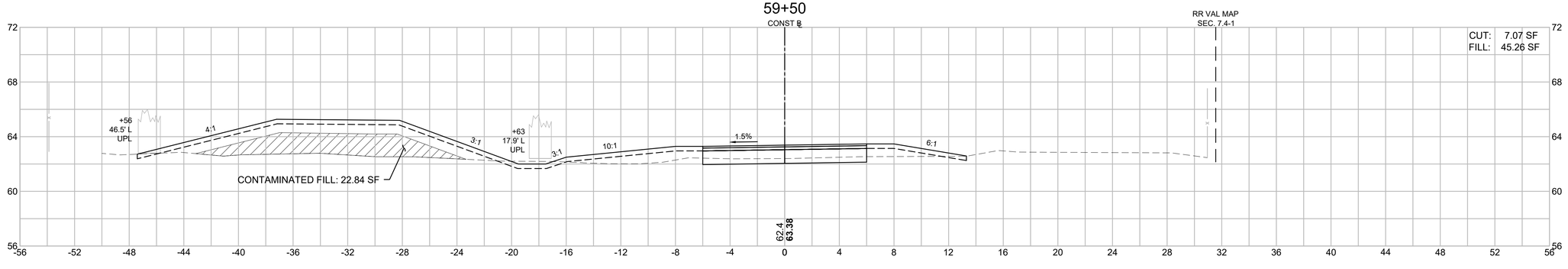

HOR. SCALE IN FEET
4 0 4 8
4 0 4 8
VER. SCALE IN FEET

LAWRENCE
LMRC RAIL TRAIL

STATE	FED. AID PROJ. NO.	SHEET NO.	TOTAL SHEETS
MA	CMQ-003S(733)X	206	245
PROJECT FILE NO.	608930		

LMRC RAIL TRAIL
CROSS SECTIONS - 34 OF 73

608930_HD11(CROSS SECTIONS).DWG Plotted on 6-Sep-2024 8:20 AM

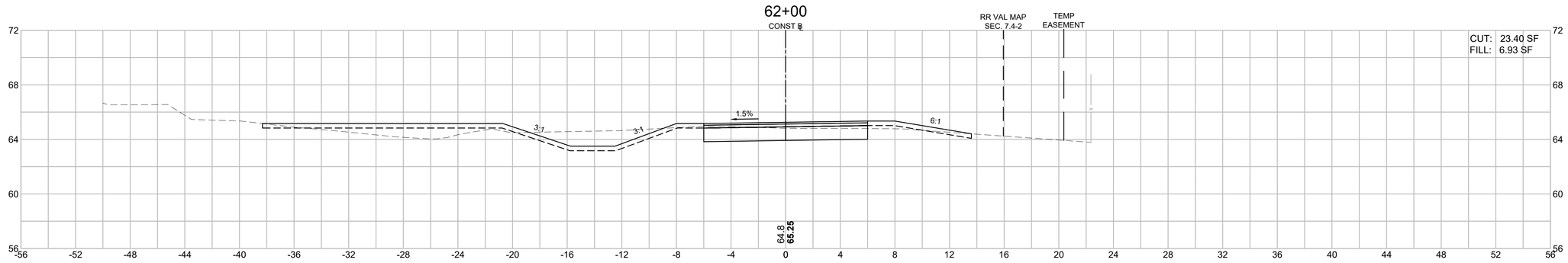

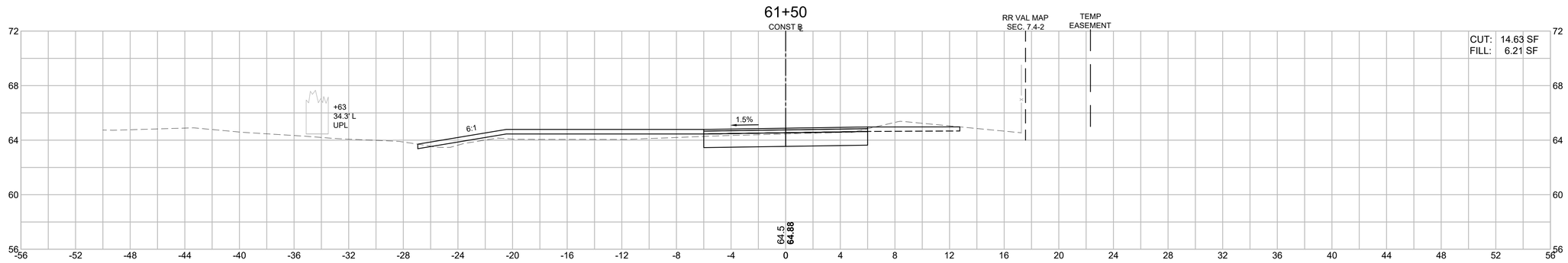

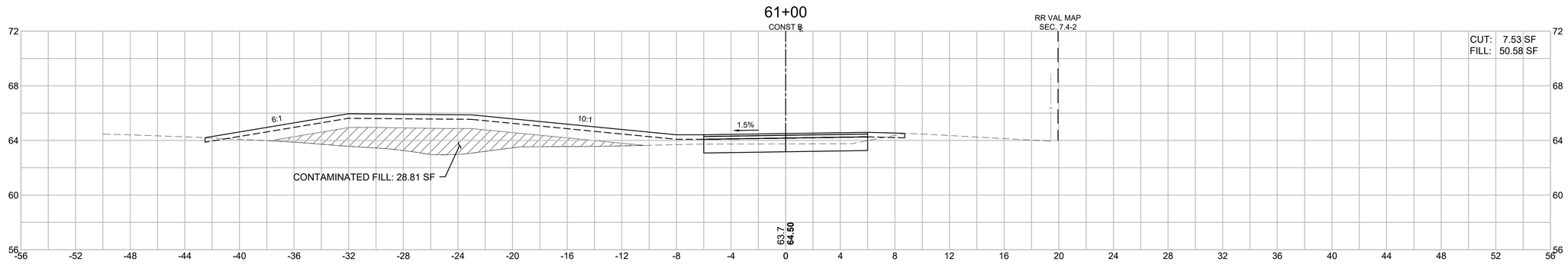

HOR. SCALE IN FEET
4 0 4 8
4 0 4 8
VER. SCALE IN FEET

LAWRENCE
LMRC RAIL TRAIL

STATE	FED. AID PROJ. NO.	SHEET NO.	TOTAL SHEETS
MA	CMQ-003S(733)X	207	245
PROJECT FILE NO.	608930		

LMRC RAIL TRAIL
CROSS SECTIONS - 35 OF 73

608930_HD11(CROSS SECTIONS).DWG Plotted on 6-Sep-2024 8:20 AM

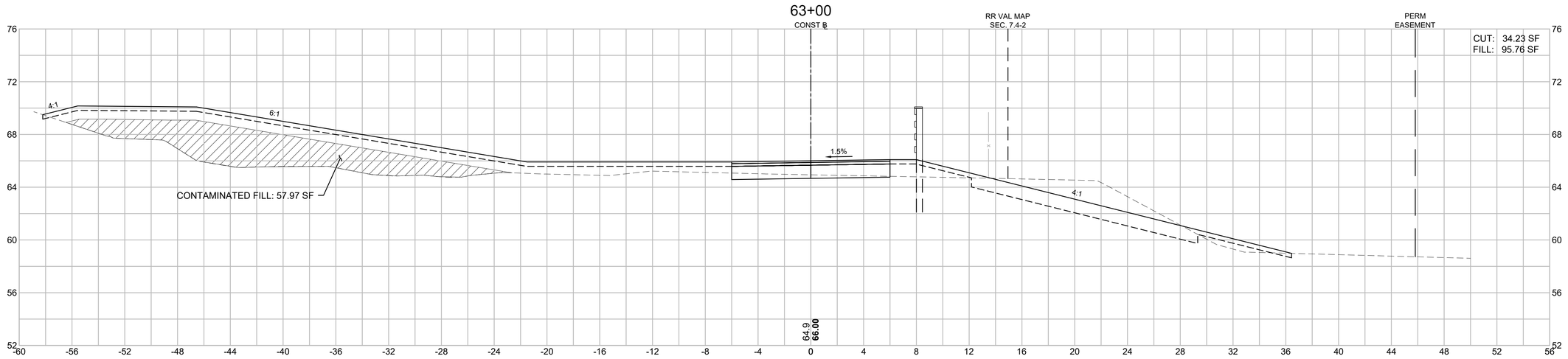

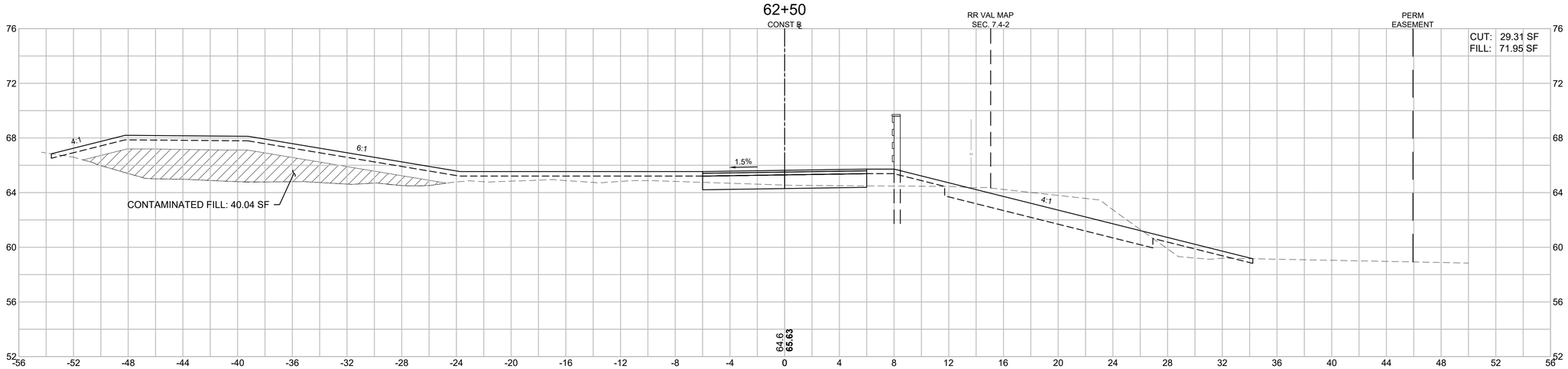

HOR. SCALE IN FEET
4 0 4 8
4 0 4 8
VER. SCALE IN FEET

LAWRENCE
LMRC RAIL TRAIL

STATE	FED. AID PROJ. NO.	SHEET NO.	TOTAL SHEETS
MA	CMQ-003S(733)X	208	245
PROJECT FILE NO.	608930		

LMRC RAIL TRAIL
CROSS SECTIONS - 36 OF 73

608930_HD11(CROSS SECTIONS).DWG Plotted on 6-Sep-2024 8:20 AM

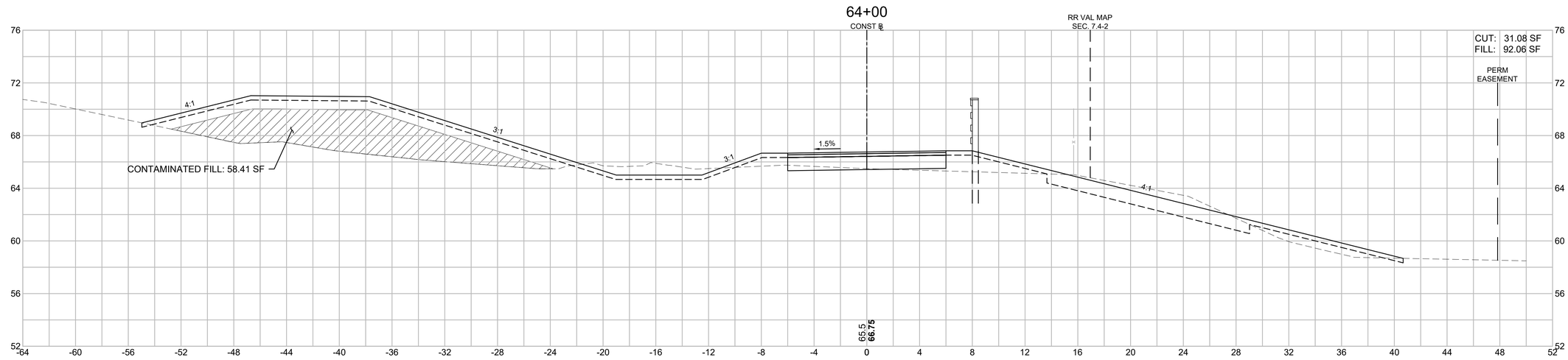

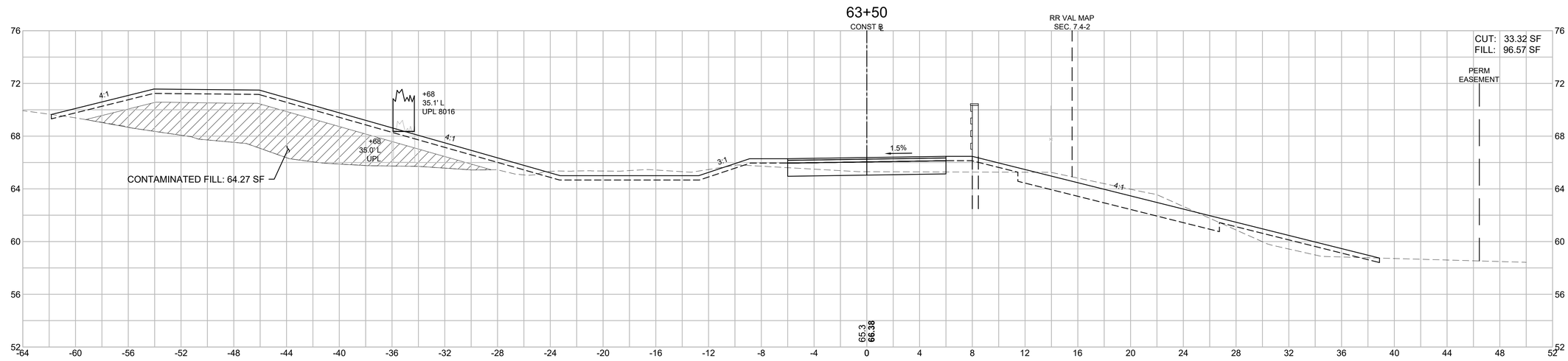

HOR. SCALE IN FEET
4 0 4 8
4 0 4 8
VER. SCALE IN FEET

LAWRENCE
LMRC RAIL TRAIL

STATE	FED. AID PROJ. NO.	SHEET NO.	TOTAL SHEETS
MA	CMQ-003S(733)X	209	245
PROJECT FILE NO.	608930		

LMRC RAIL TRAIL
CROSS SECTIONS - 37 OF 73

608930_HD11\CROSS SECTIONS\.DWG Plotted on 6-Sep-2024 8:21 AM

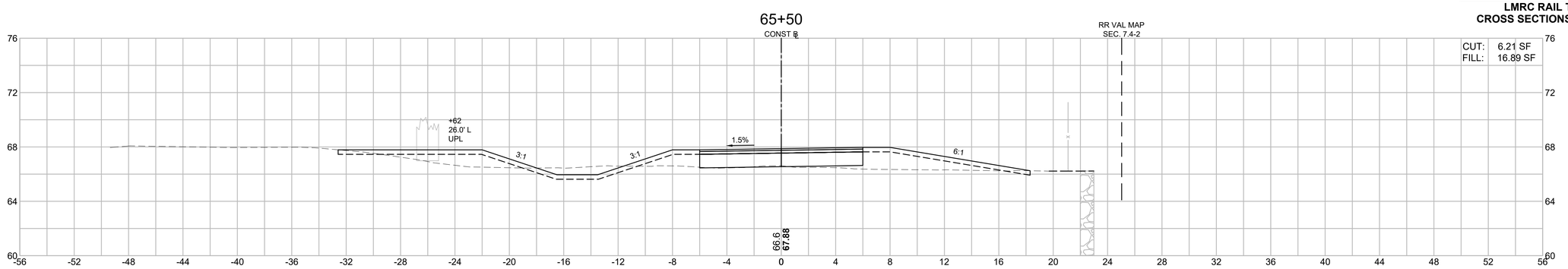

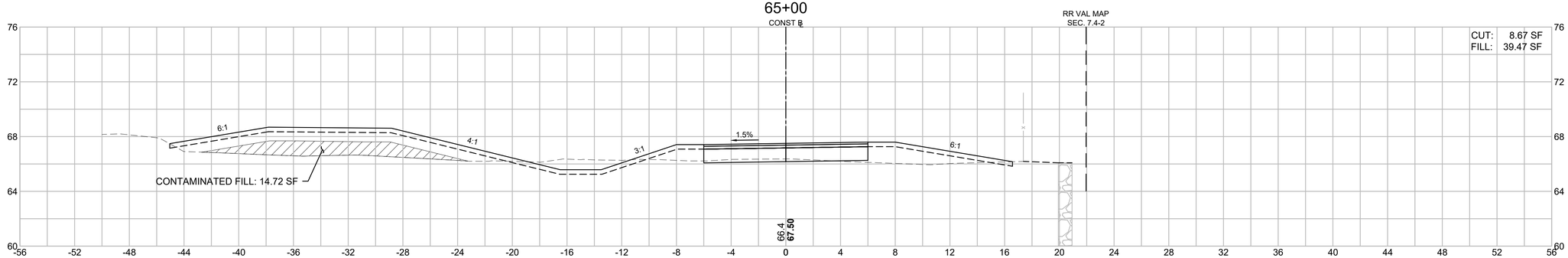

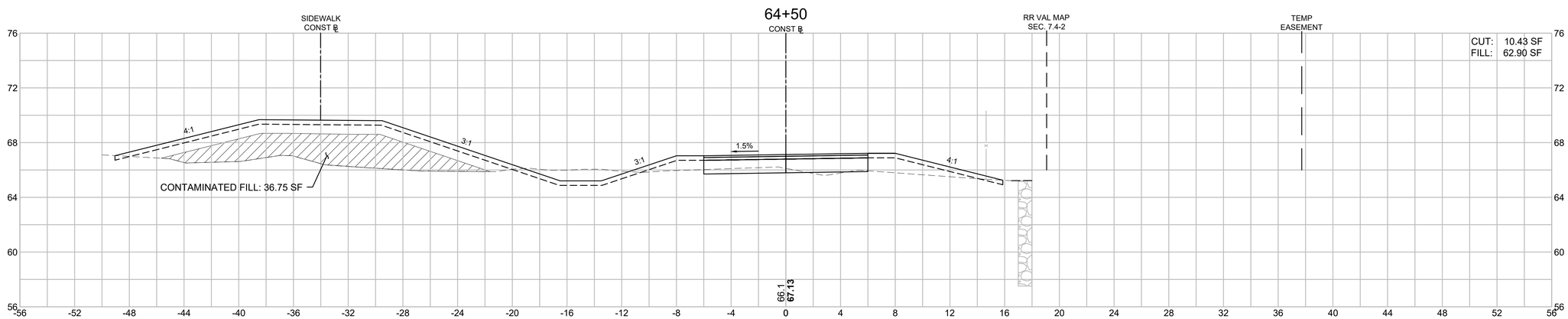

HOR. SCALE IN FEET
4 0 4 8
4 0 4 8
VER. SCALE IN FEET

LAWRENCE
LMRC RAIL TRAIL

STATE	FED. AID PROJ. NO.	SHEET NO.	TOTAL SHEETS
MA	CMQ-003S(733)X	210	245
PROJECT FILE NO.	608930		

LMRC RAIL TRAIL
CROSS SECTIONS - 38 OF 73

608930_HD11(CROSS SECTIONS).DWG Plotted on 6-Sep-2024 8:21 AM

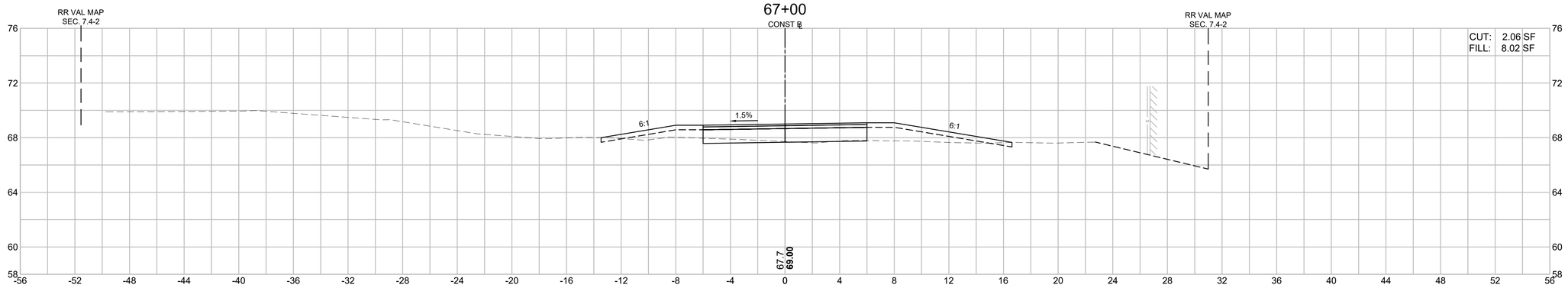

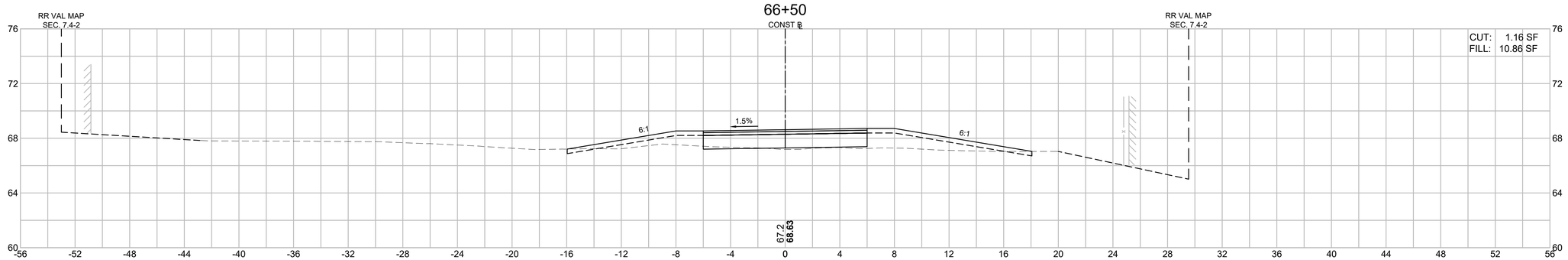

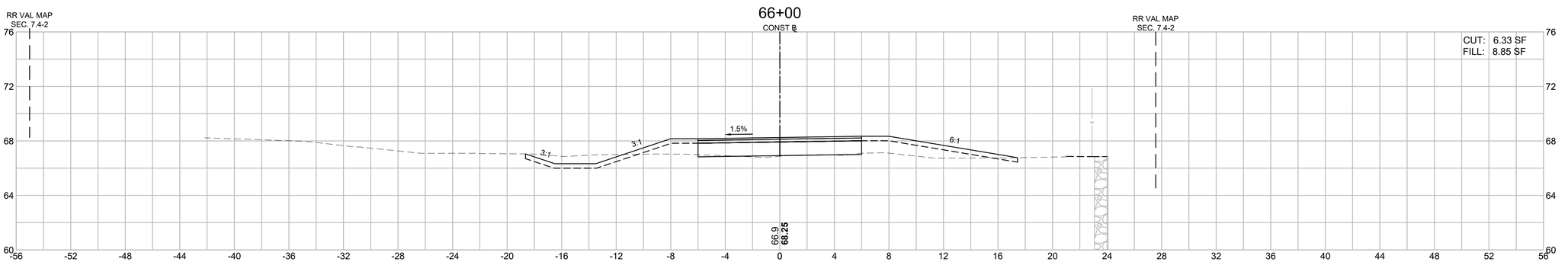

HOR. SCALE IN FEET
4 0 4 8
4 0 4 8
VER. SCALE IN FEET

LAWRENCE
LMRC RAIL TRAIL

STATE	FED. AID PROJ. NO.	SHEET NO.	TOTAL SHEETS
MA	CMQ-003S(733)X	211	245
PROJECT FILE NO.	608930		

LMRC RAIL TRAIL
CROSS SECTIONS - 39 OF 73

608930_HD11(CROSS SECTIONS).DWG Plotted on 6-Sep-2024 8:21 AM

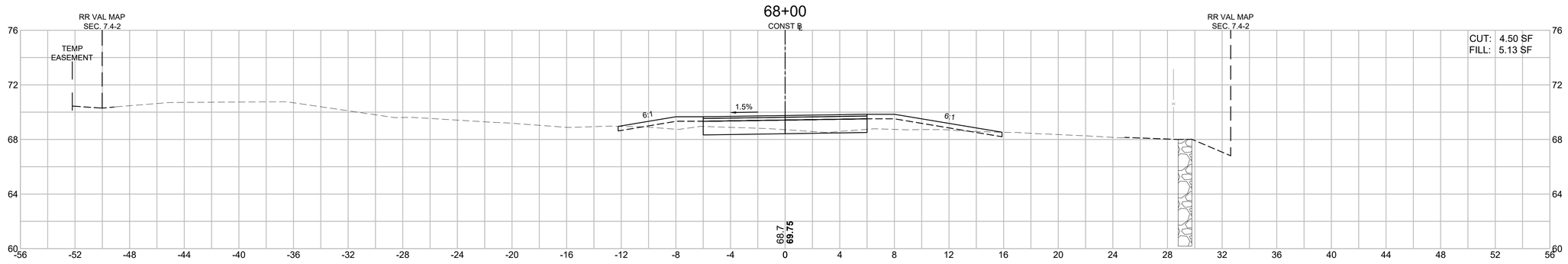

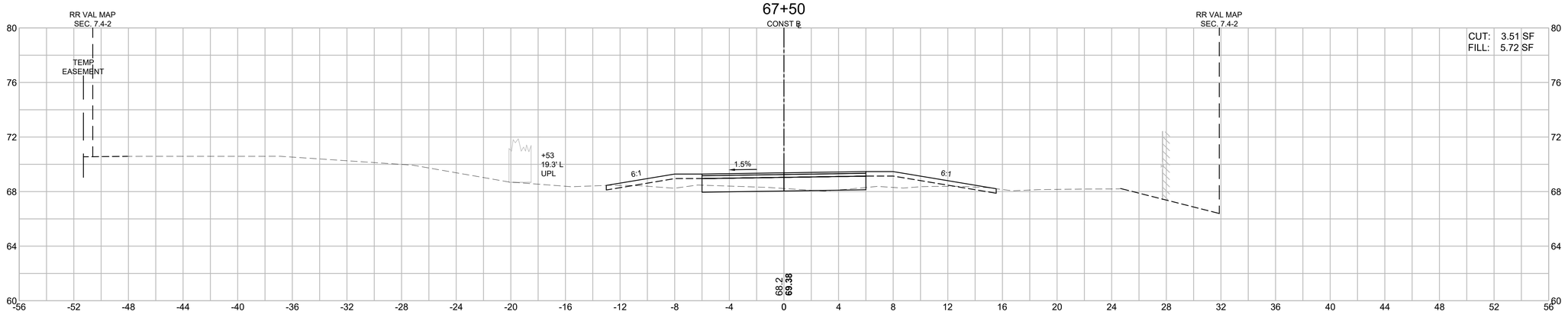

HOR. SCALE IN FEET
4 0 4 8
4 0 4 8
VER. SCALE IN FEET

LAWRENCE
LMRC RAIL TRAIL

STATE	FED. AID PROJ. NO.	SHEET NO.	TOTAL SHEETS
MA	CMQ-003S(733)X	212	245
PROJECT FILE NO.	608930		

LMRC RAIL TRAIL
CROSS SECTIONS - 40 OF 73

608930_HD11\(CROSS SECTIONS).DWG Plotted on 6-Sep-2024 8:22 AM

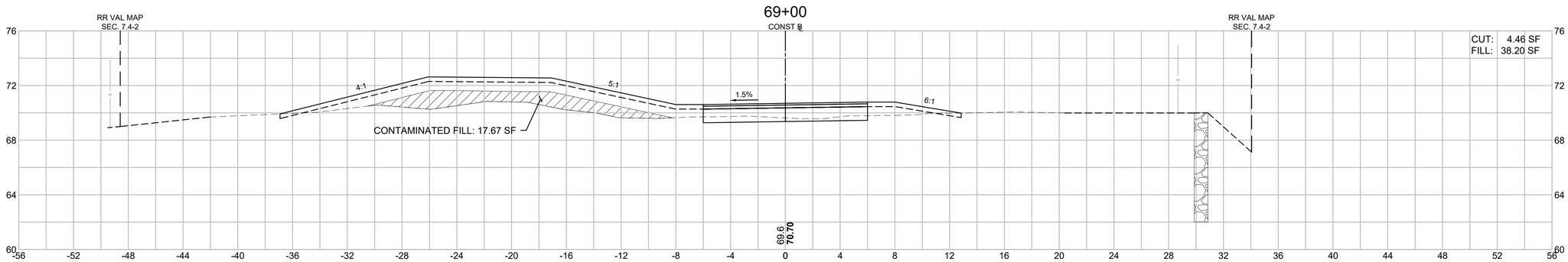

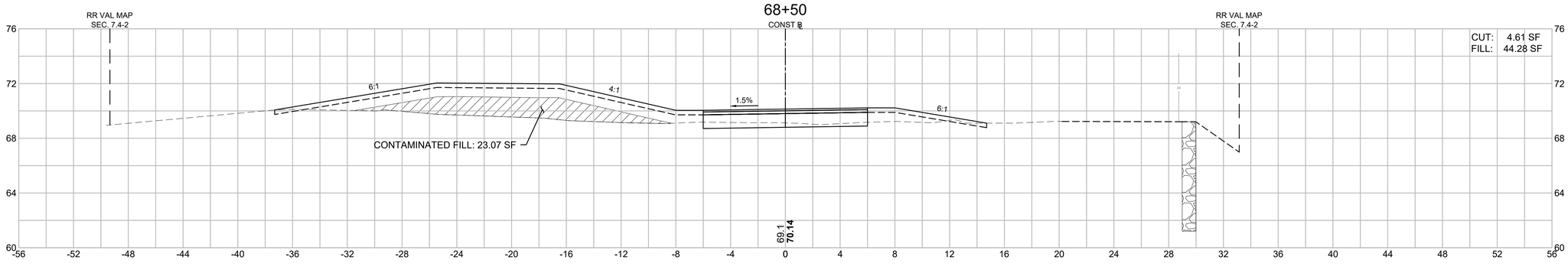

HOR. SCALE IN FEET
4 0 4 8
4 0 4 8
VER. SCALE IN FEET

LAWRENCE
LMRC RAIL TRAIL

STATE	FED. AID PROJ. NO.	SHEET NO.	TOTAL SHEETS
MA	CMQ-003S(733)X	213	245
PROJECT FILE NO.	608930		

LMRC RAIL TRAIL
CROSS SECTIONS - 41 OF 73

608930_HD11\(CROSS SECTIONS).DWG Plotted on 6-Sep-2024 8:22 AM

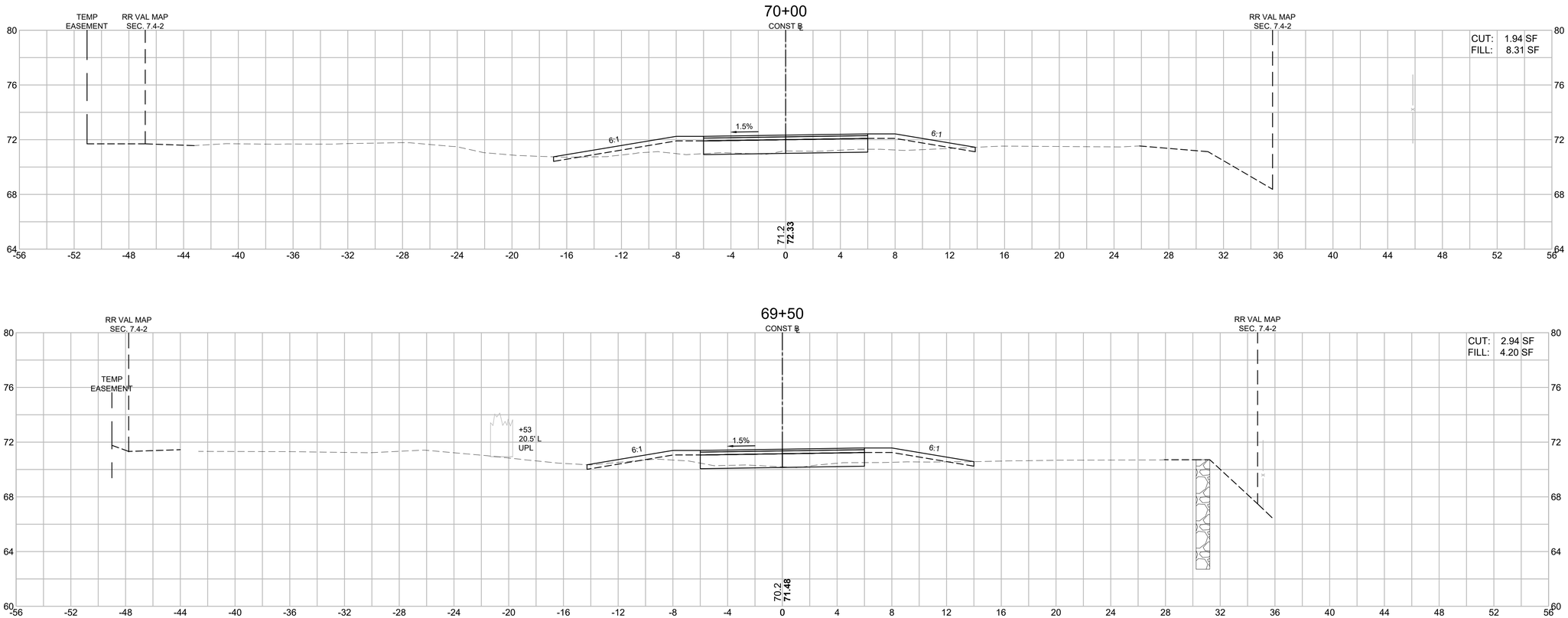

HOR. SCALE IN FEET
4 0 4 8
4 0 4 8
VER. SCALE IN FEET

LAWRENCE
LMRC RAIL TRAIL

STATE	FED. AID PROJ. NO.	SHEET NO.	TOTAL SHEETS
MA	CMQ-003S(733)X	214	245
PROJECT FILE NO.	608930		

LMRC RAIL TRAIL
CROSS SECTIONS - 42 OF 73

608930_HD11(CROSS SECTIONS).DWG Plotted on 6-Sep-2024 8:22 AM

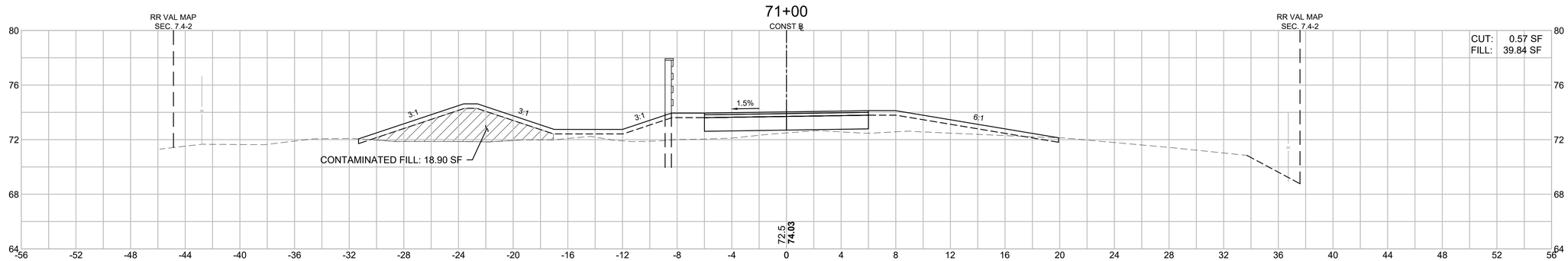

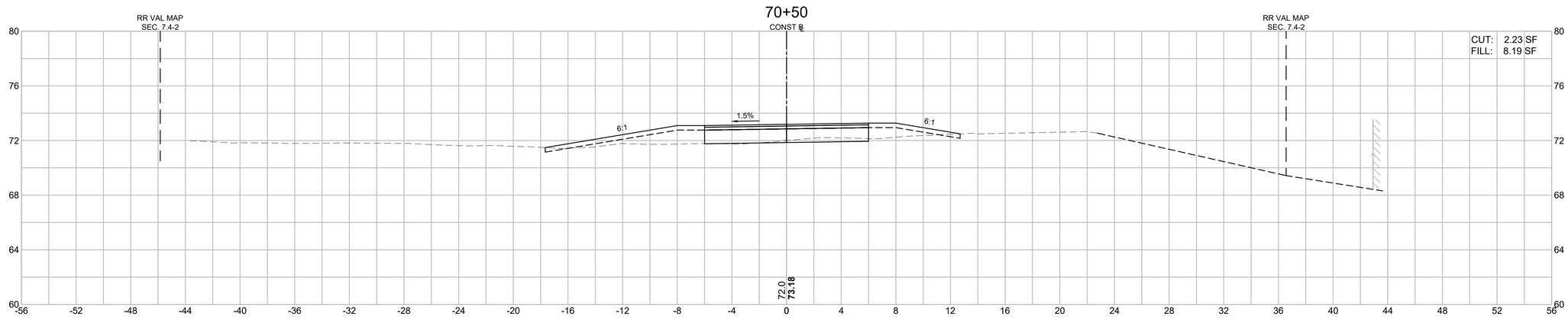

HOR. SCALE IN FEET
4 0 4 8
4 0 4 8
VER. SCALE IN FEET

LAWRENCE
LMRC RAIL TRAIL

STATE	FED. AID PROJ. NO.	SHEET NO.	TOTAL SHEETS
MA	CMQ-003S(733)X	215	245
PROJECT FILE NO.	608930		

LMRC RAIL TRAIL
CROSS SECTIONS - 43 OF 73

608930_HD11(CROSS SECTIONS).DWG Plotted on 6-Sep-2024 8:23 AM

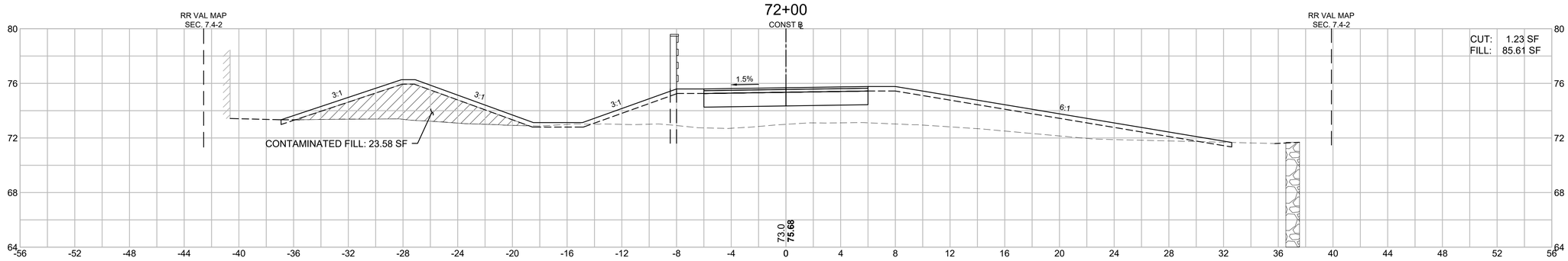

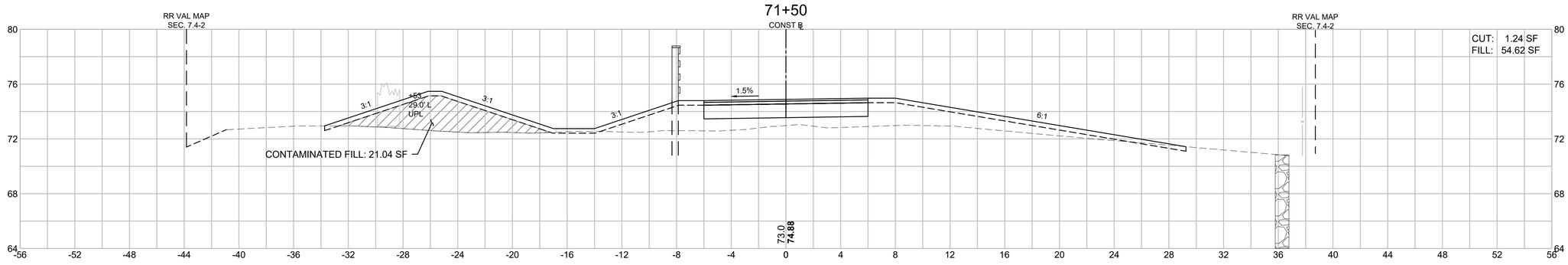

HOR. SCALE IN FEET
4 0 4 8
4 0 4 8
VER. SCALE IN FEET

LAWRENCE
LMRC RAIL TRAIL

STATE	FED. AID PROJ. NO.	SHEET NO.	TOTAL SHEETS
MA	CMQ-003S(733)X	216	245
PROJECT FILE NO.	608930		

LMRC RAIL TRAIL
CROSS SECTIONS - 44 OF 73

608930_HD11\CROSS SECTIONS\.DWG Plotted on 6-Sep-2024 8:23 AM

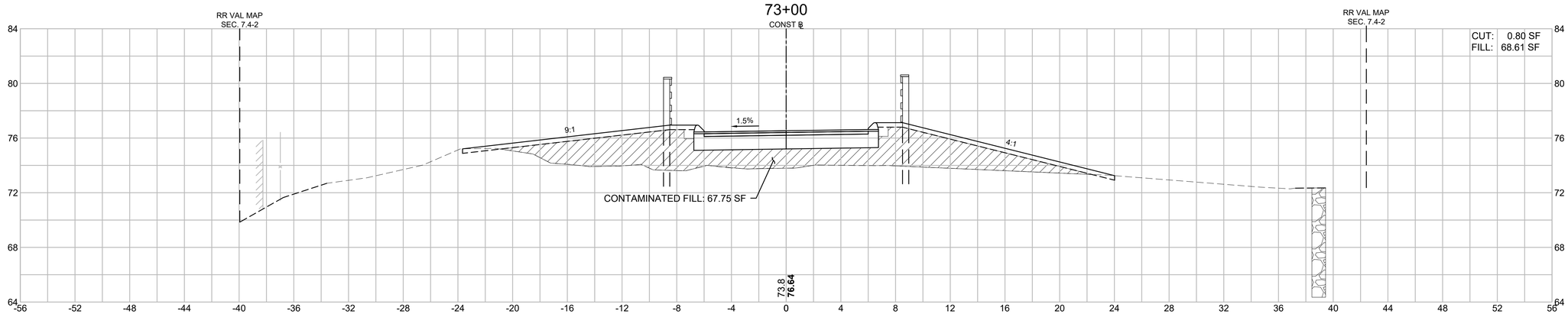

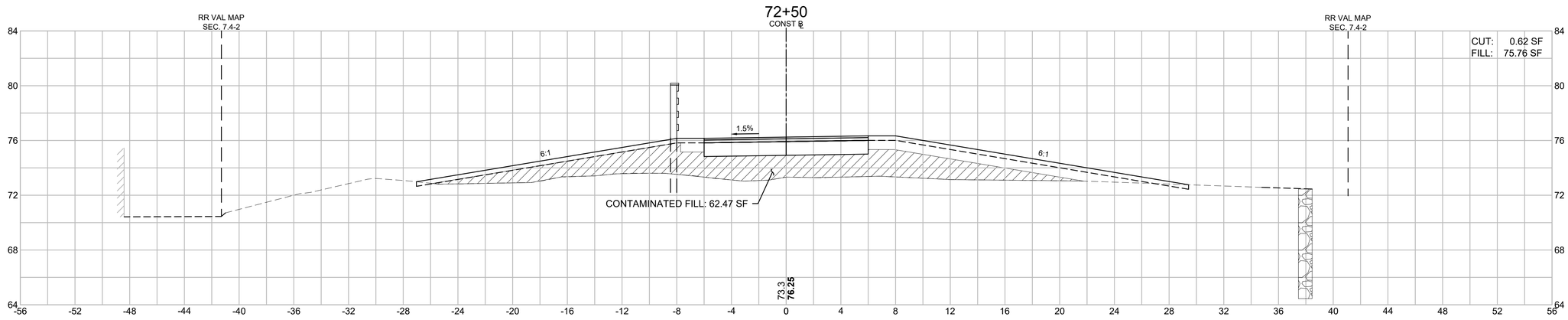

HOR. SCALE IN FEET
4 0 4 8
4 0 4 8
VER. SCALE IN FEET

LAWRENCE
LMRC RAIL TRAIL

STATE	FED. AID PROJ. NO.	SHEET NO.	TOTAL SHEETS
MA	CMQ-003S(733)X	217	245
PROJECT FILE NO.	608930		

LMRC RAIL TRAIL
CROSS SECTIONS - 45 OF 73

608930_HD11\(CROSS SECTIONS).DWG Plotted on 6-Sep-2024 8:23 AM

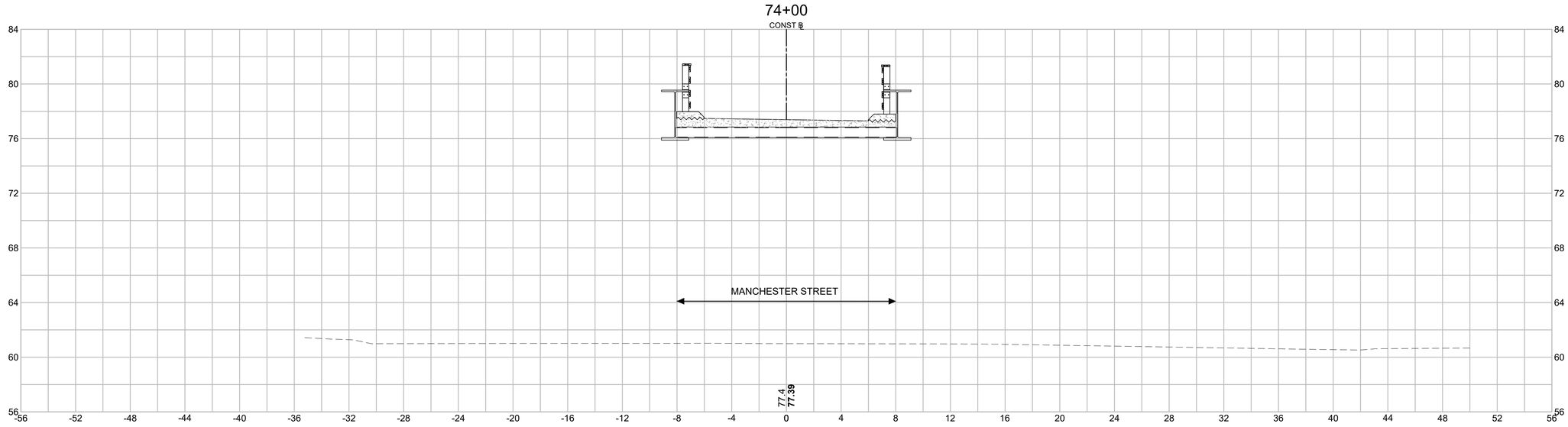

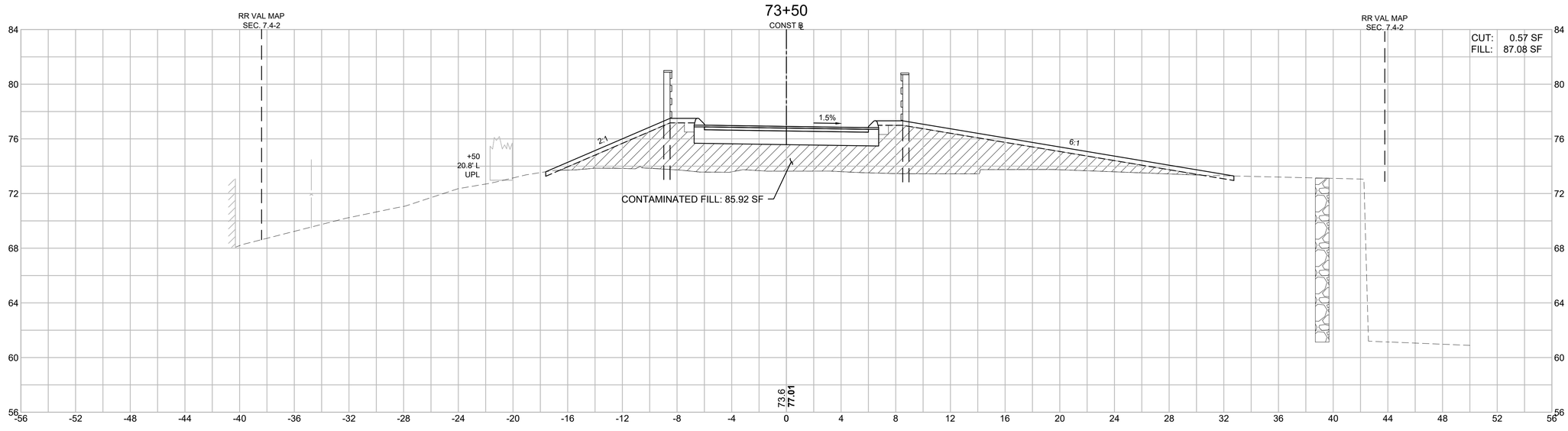

HOR. SCALE IN FEET
4 0 4 8
4 0 4 8
VER. SCALE IN FEET

LAWRENCE
LMRC RAIL TRAIL

STATE	FED. AID PROJ. NO.	SHEET NO.	TOTAL SHEETS
MA	CMQ-003S(733)X	218	245
PROJECT FILE NO.	608930		

LMRC RAIL TRAIL
CROSS SECTIONS - 46 OF 73

608930_HD11\CROSS SECTIONS\.DWG Plotted on 6-Sep-2024 8:24 AM

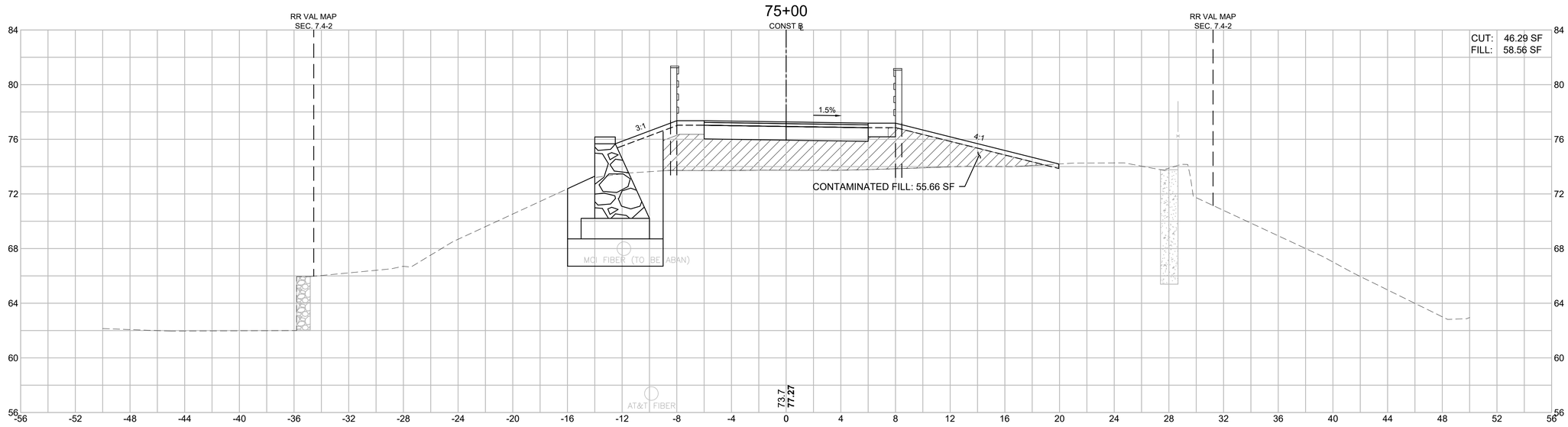

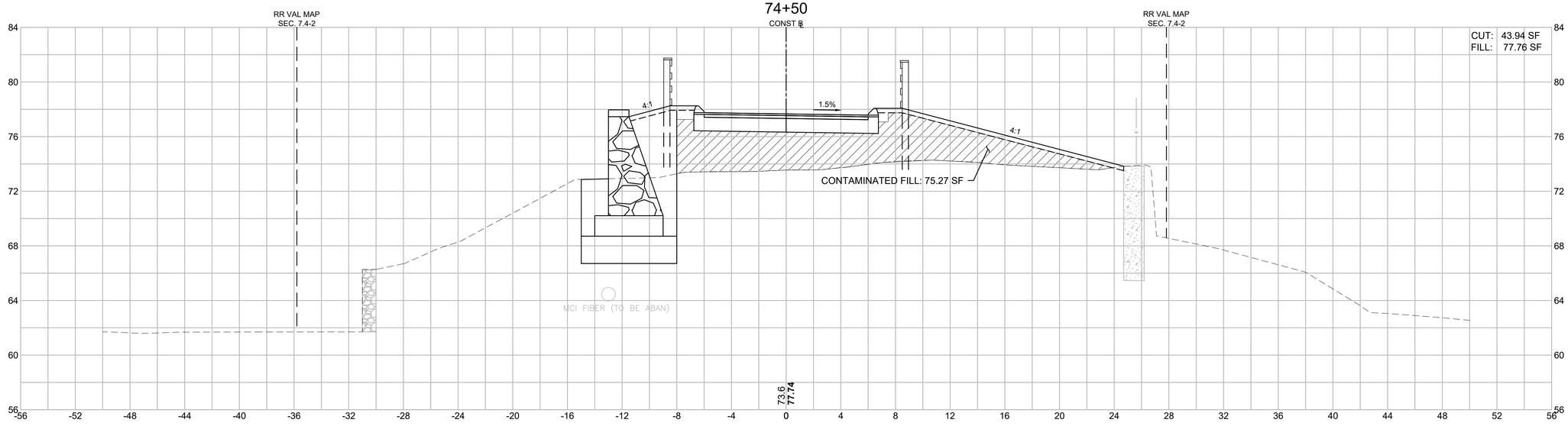

HOR. SCALE IN FEET
4 0 4 8
4 0 4 8
VER. SCALE IN FEET

LAWRENCE
LMRC RAIL TRAIL

STATE	FED. AID PROJ. NO.	SHEET NO.	TOTAL SHEETS
MA	CMQ-003S(733)X	219	245
PROJECT FILE NO.	608930		

LMRC RAIL TRAIL
CROSS SECTIONS - 47 OF 73

608930_HD11(CROSS SECTIONS).DWG Plotted on 6-Sep-2024 8:24 AM

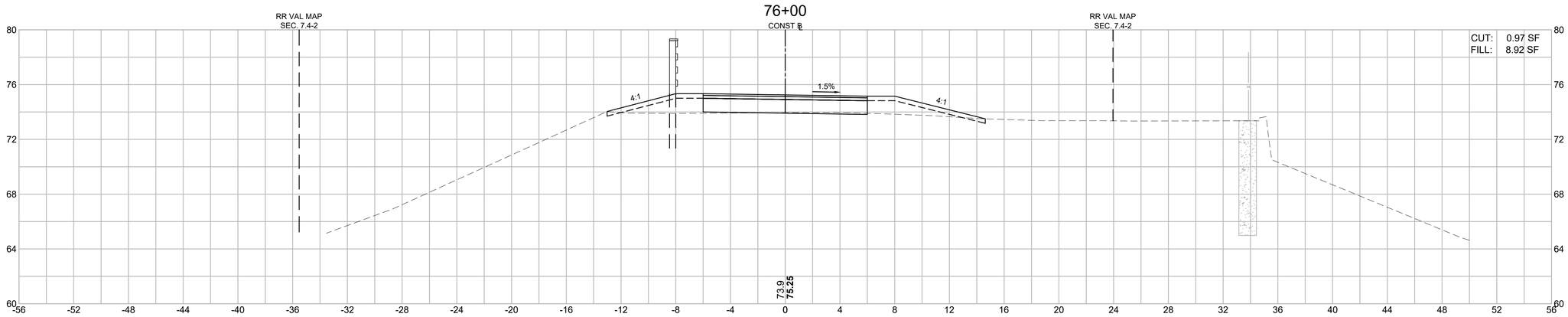

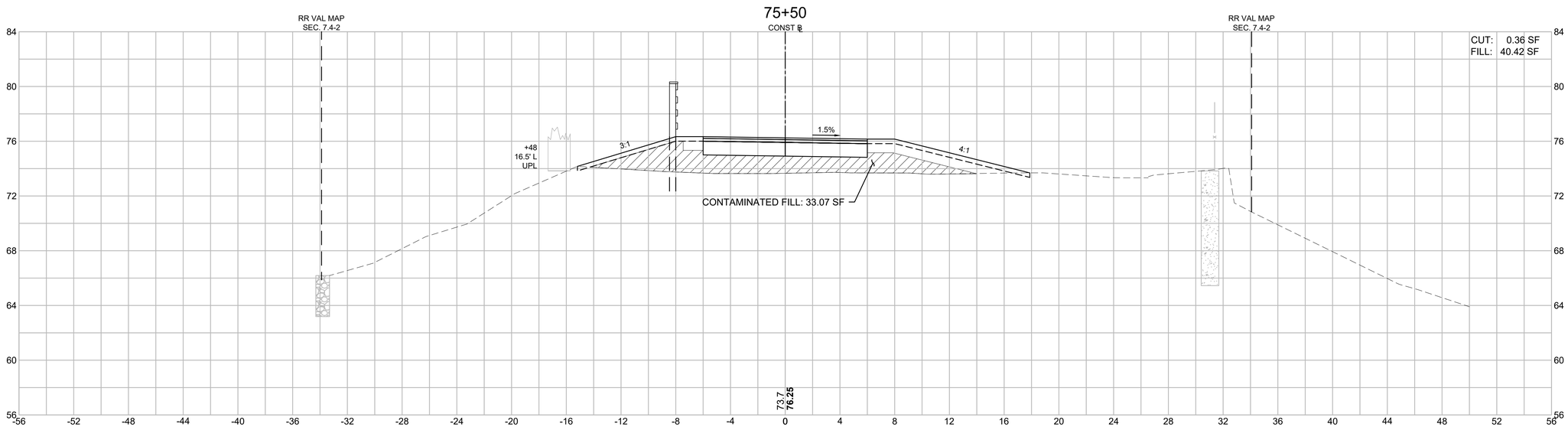

HOR. SCALE IN FEET
4 0 4 8
4 0 4 8
VER. SCALE IN FEET

LAWRENCE
LMRC RAIL TRAIL

STATE	FED. AID PROJ. NO.	SHEET NO.	TOTAL SHEETS
MA	CMQ-003S(733)X	220	245
PROJECT FILE NO.	608930		

LMRC RAIL TRAIL
CROSS SECTIONS - 48 OF 73

608930_HD11(CROSS SECTIONS).DWG Plotted on 6-Sep-2024 8:24 AM

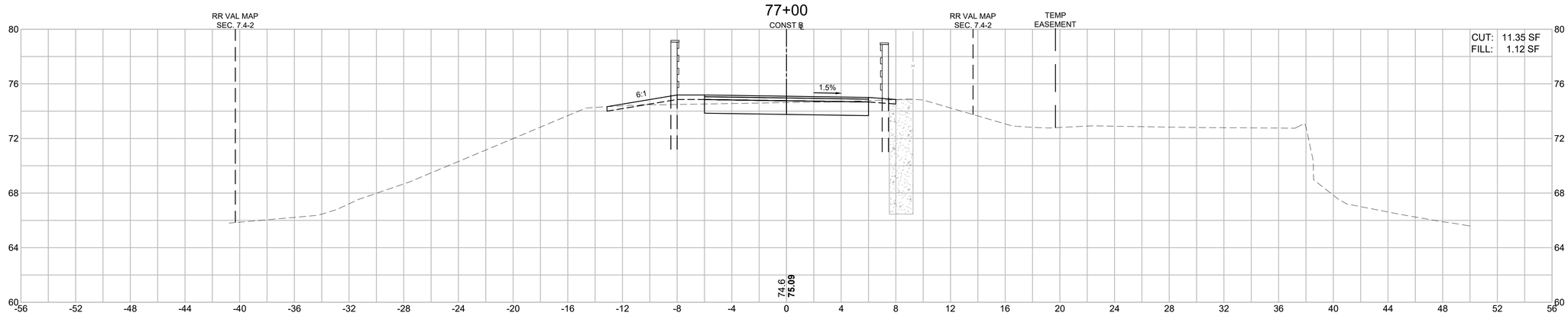

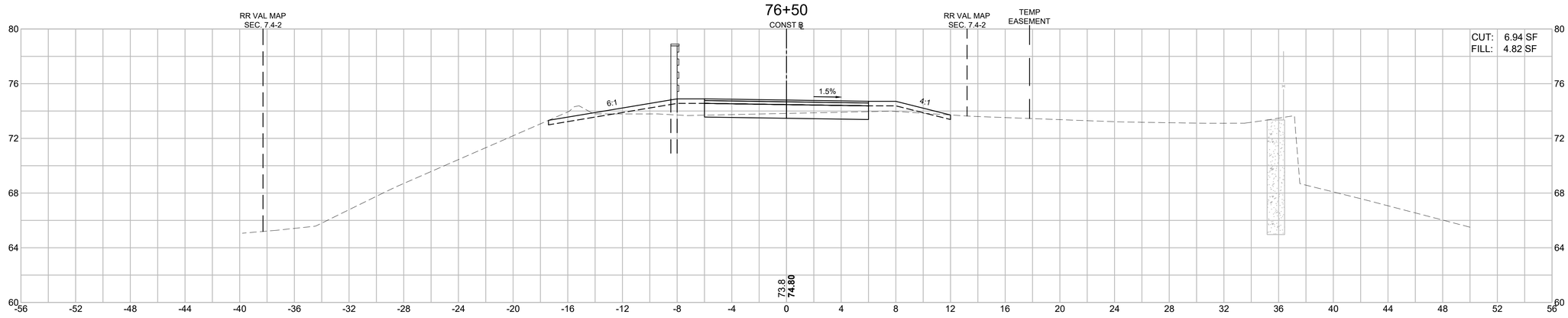

HOR. SCALE IN FEET
4 0 4 8
4 0 4 8
VER. SCALE IN FEET

LAWRENCE
LMRC RAIL TRAIL

STATE	FED. AID PROJ. NO.	SHEET NO.	TOTAL SHEETS
MA	CMQ-003S(733)X	221	245
PROJECT FILE NO.	608930		

LMRC RAIL TRAIL
CROSS SECTIONS - 49 OF 73

608930_HD11(CROSS SECTIONS).DWG Plotted on 6-Sep-2024 8:25 AM

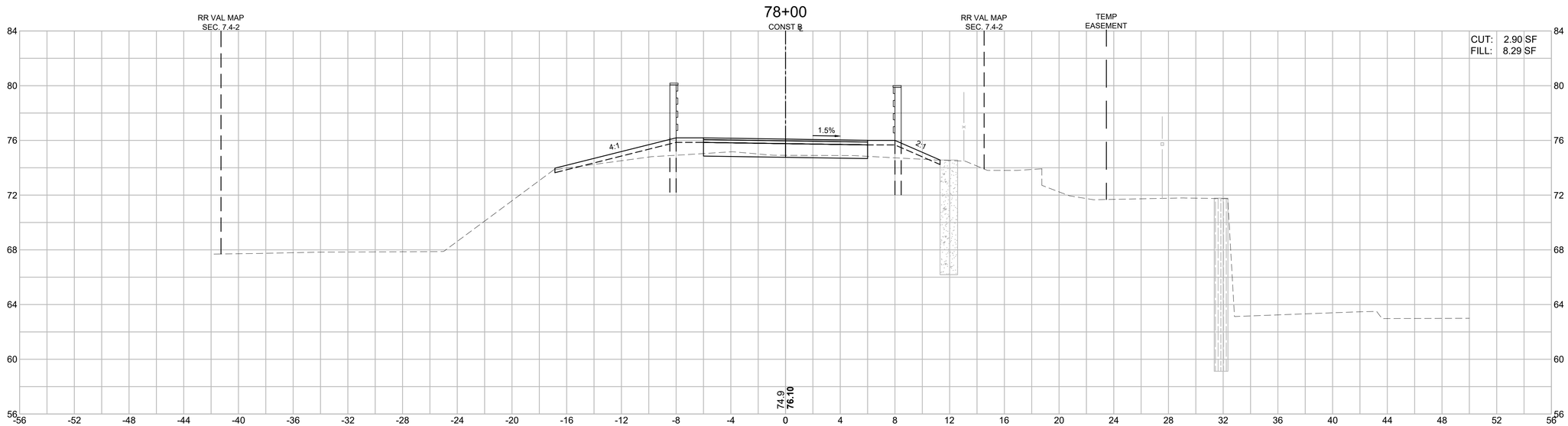

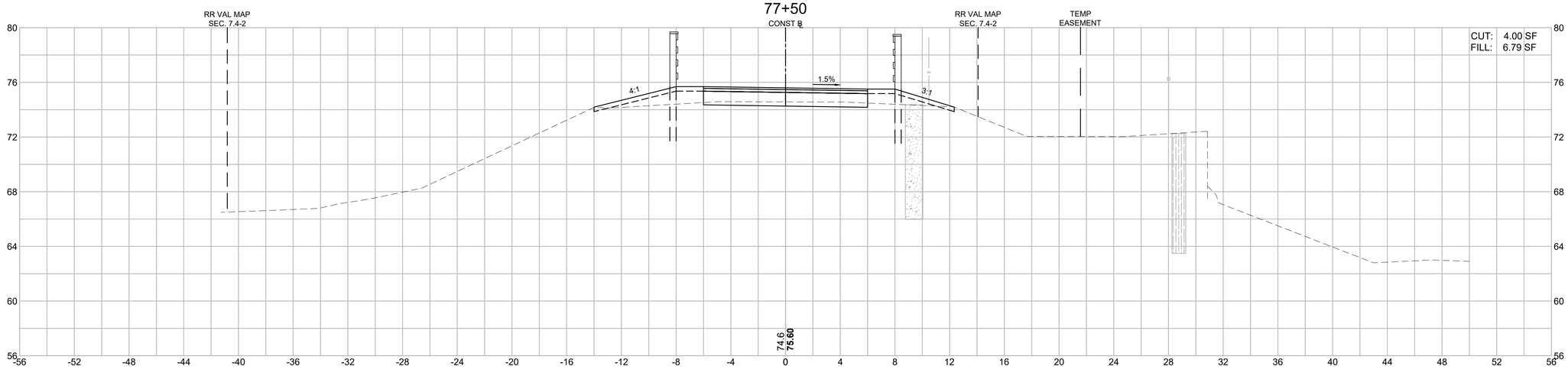

HOR. SCALE IN FEET
4 0 4 8
4 0 4 8
VER. SCALE IN FEET

LAWRENCE
LMRC RAIL TRAIL

STATE	FED. AID PROJ. NO.	SHEET NO.	TOTAL SHEETS
MA	CMQ-003S(733)X	222	245
PROJECT FILE NO.	608930		

LMRC RAIL TRAIL
CROSS SECTIONS - 50 OF 73

608930_HD11\CROSS SECTIONS\.DWG Plotted on 6-Sep-2024 8:25 AM

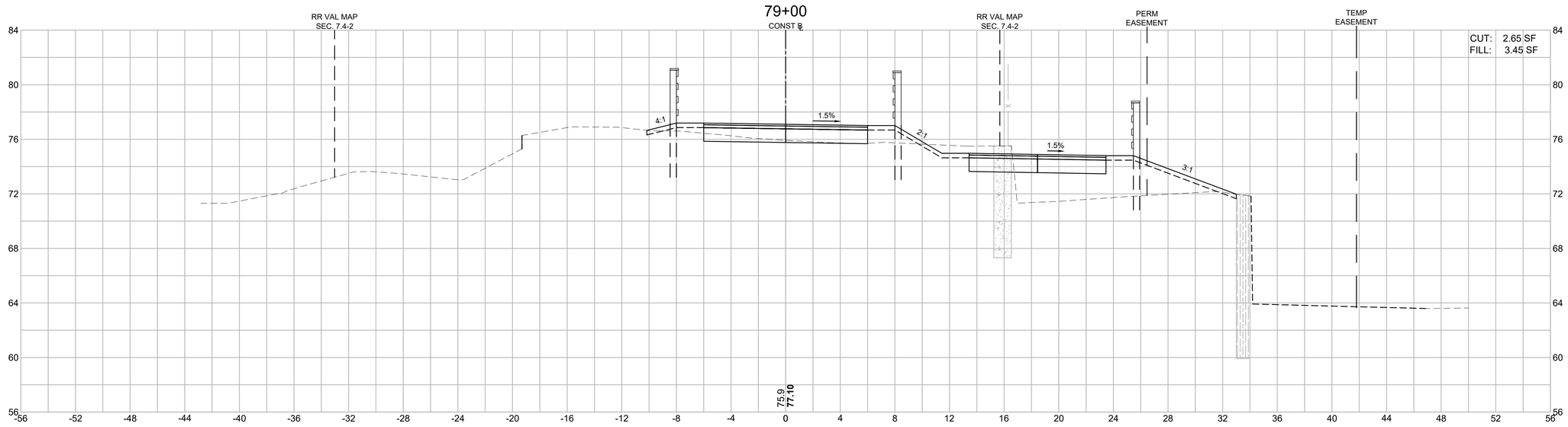

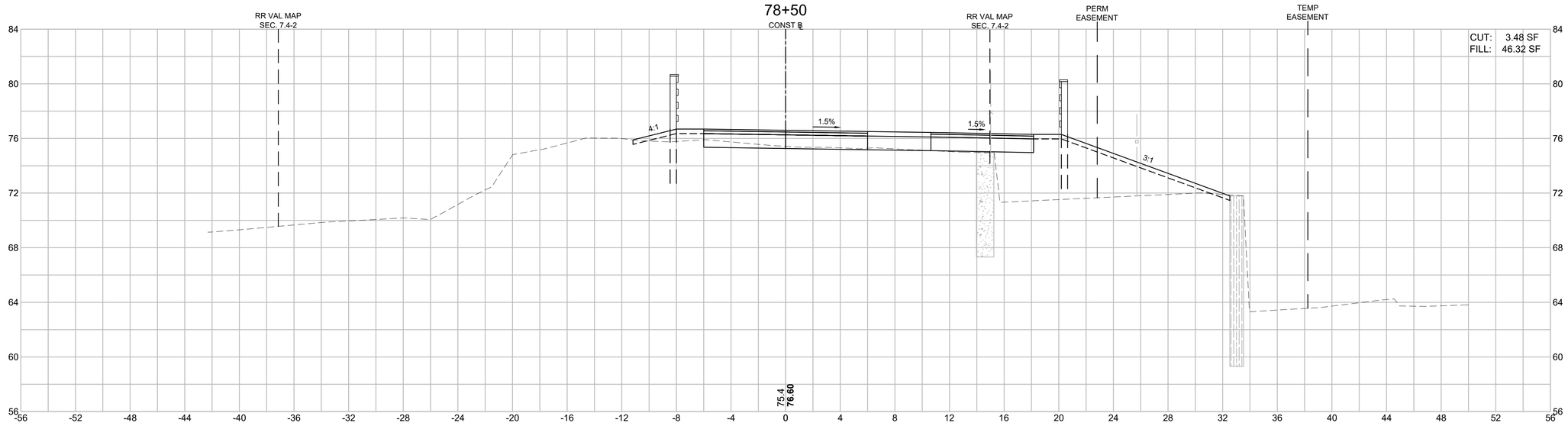

HOR. SCALE IN FEET
4 0 4 8
4 0 4 8
VER. SCALE IN FEET

LAWRENCE
LMRC RAIL TRAIL

STATE	FED. AID PROJ. NO.	SHEET NO.	TOTAL SHEETS
MA	CMQ-003S(733)X	223	245
PROJECT FILE NO.	608930		

LMRC RAIL TRAIL
CROSS SECTIONS - 51 OF 73

608930_HD11\(CROSS SECTIONS).DWG Plotted on 6-Sep-2024 8:25 AM

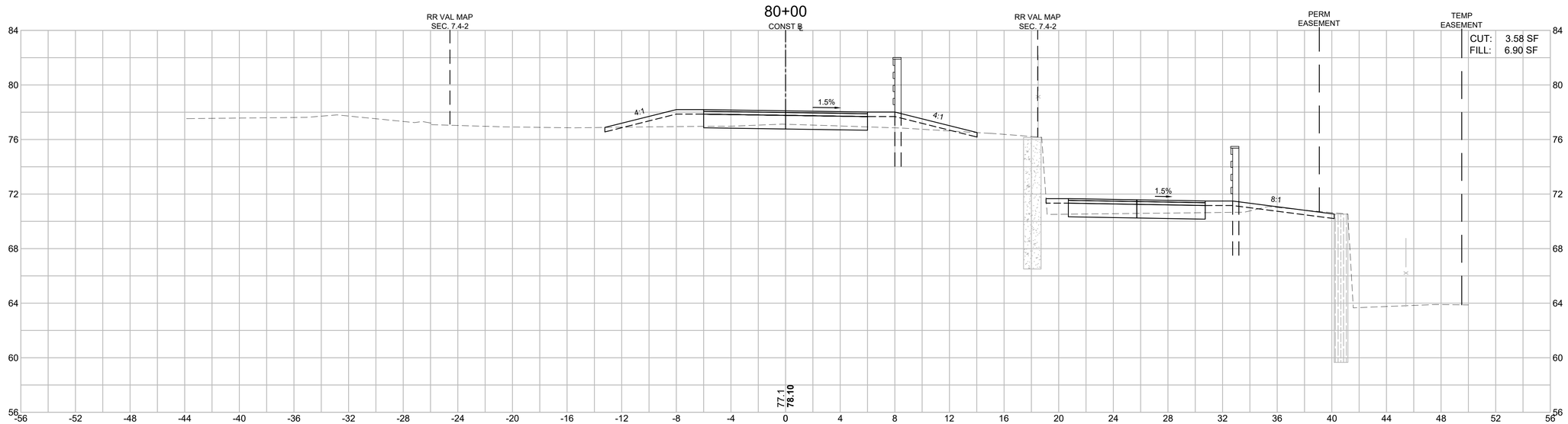

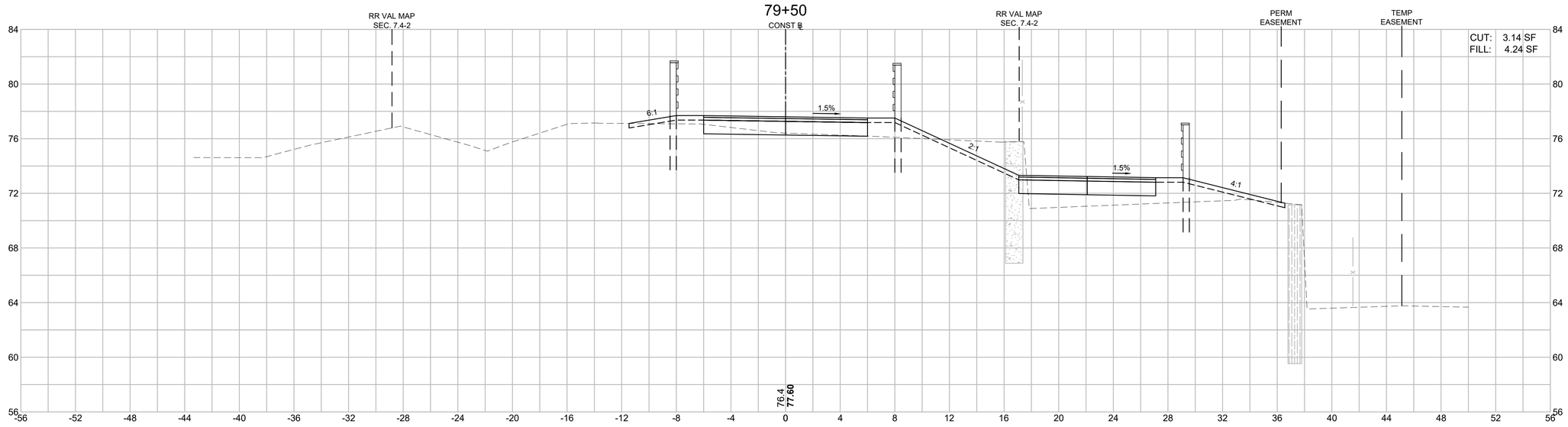

HOR. SCALE IN FEET
4 0 4 8
4 0 4 8
VER. SCALE IN FEET

LAWRENCE
LMRC RAIL TRAIL

STATE	FED. AID PROJ. NO.	SHEET NO.	TOTAL SHEETS
MA	CMQ-003S(733)X	224	245
PROJECT FILE NO.	608930		

LMRC RAIL TRAIL
CROSS SECTIONS - 52 OF 73

608930_HD11\CROSS SECTIONS\.DWG Plotted on 6-Sep-2024 8:26 AM

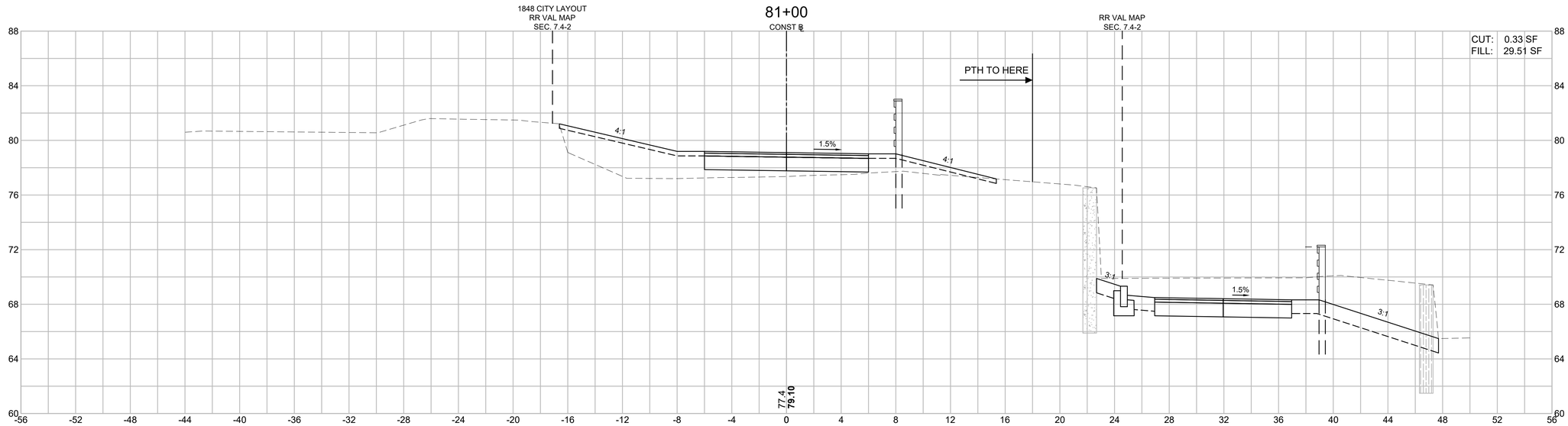

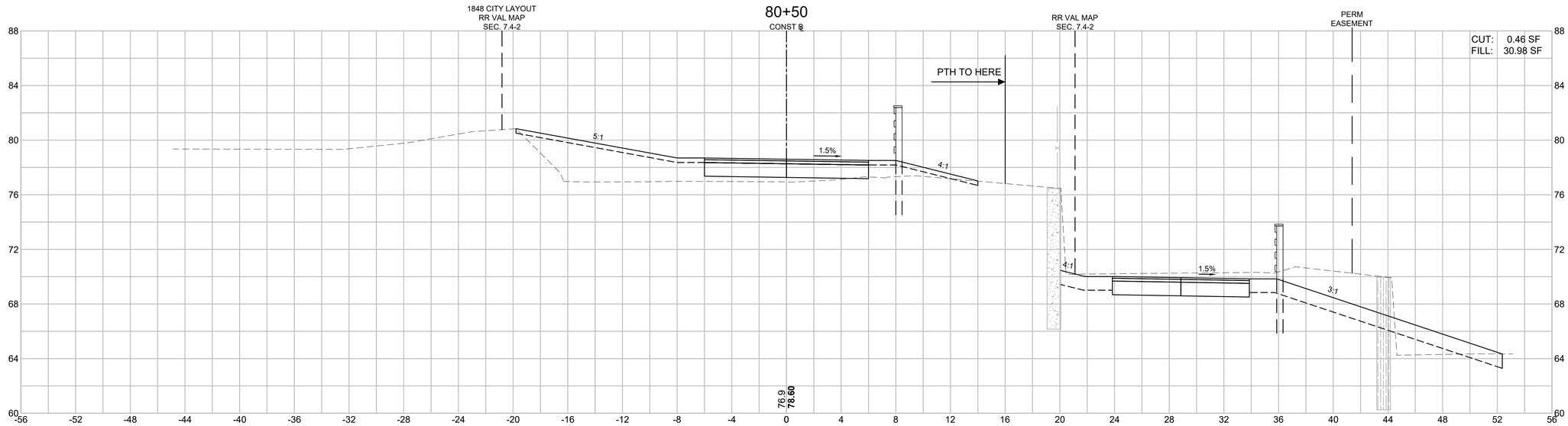

HOR. SCALE IN FEET
4 0 4 8
4 0 4 8
VER. SCALE IN FEET

LAWRENCE
LMRC RAIL TRAIL

STATE	FED. AID PROJ. NO.	SHEET NO.	TOTAL SHEETS
MA	CMQ-003S(733)X	225	245
PROJECT FILE NO.	608930		

LMRC RAIL TRAIL
CROSS SECTIONS - 53 OF 73

608930_HD11(CROSS SECTIONS).DWG Plotted on 6-Sep-2024 8:26 AM

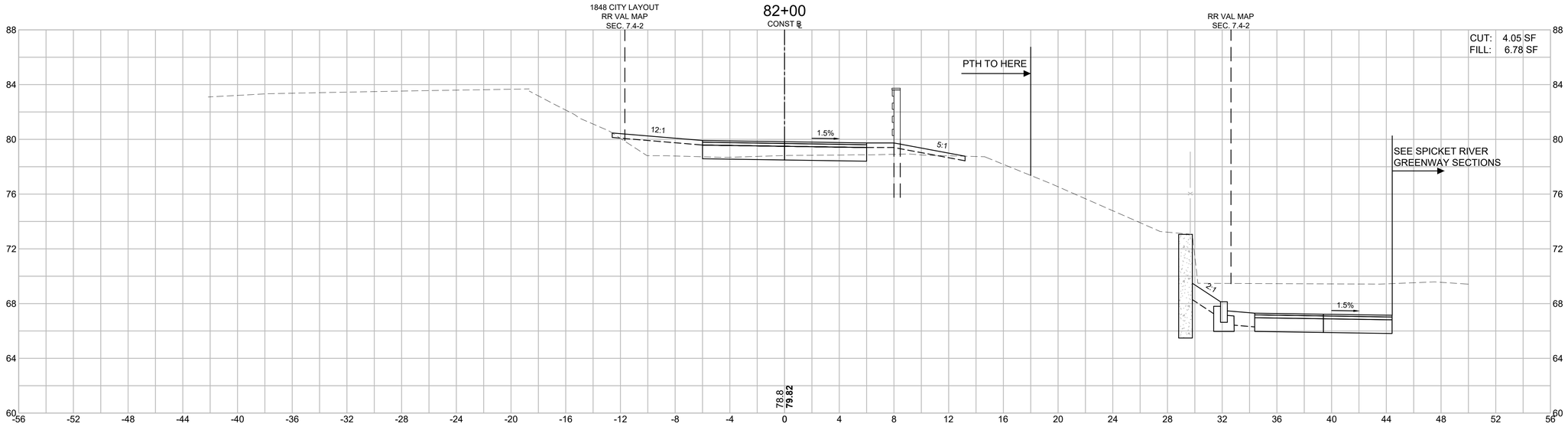

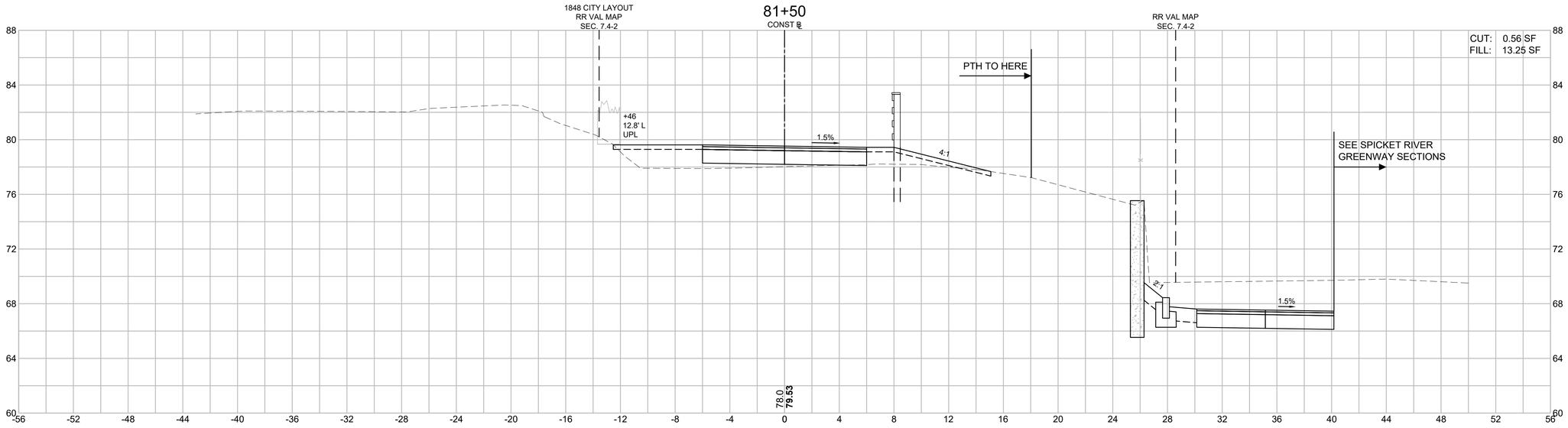

HOR. SCALE IN FEET
4 0 4 8
4 0 4 8
VER. SCALE IN FEET

LAWRENCE
LMRC RAIL TRAIL

STATE	FED. AID PROJ. NO.	SHEET NO.	TOTAL SHEETS
MA	CMQ-003S(733)X	226	245
PROJECT FILE NO.	608930		

LMRC RAIL TRAIL
CROSS SECTIONS - 54 OF 73

608930_HD11\CROSS SECTIONS\.DWG Plotted on 6-Sep-2024 8:26 AM

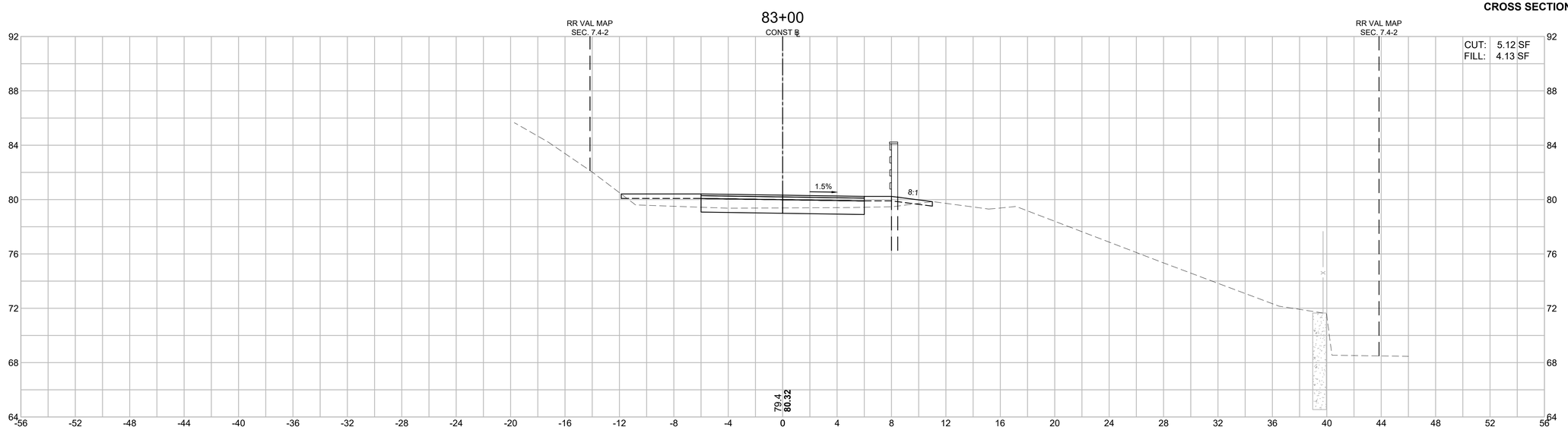

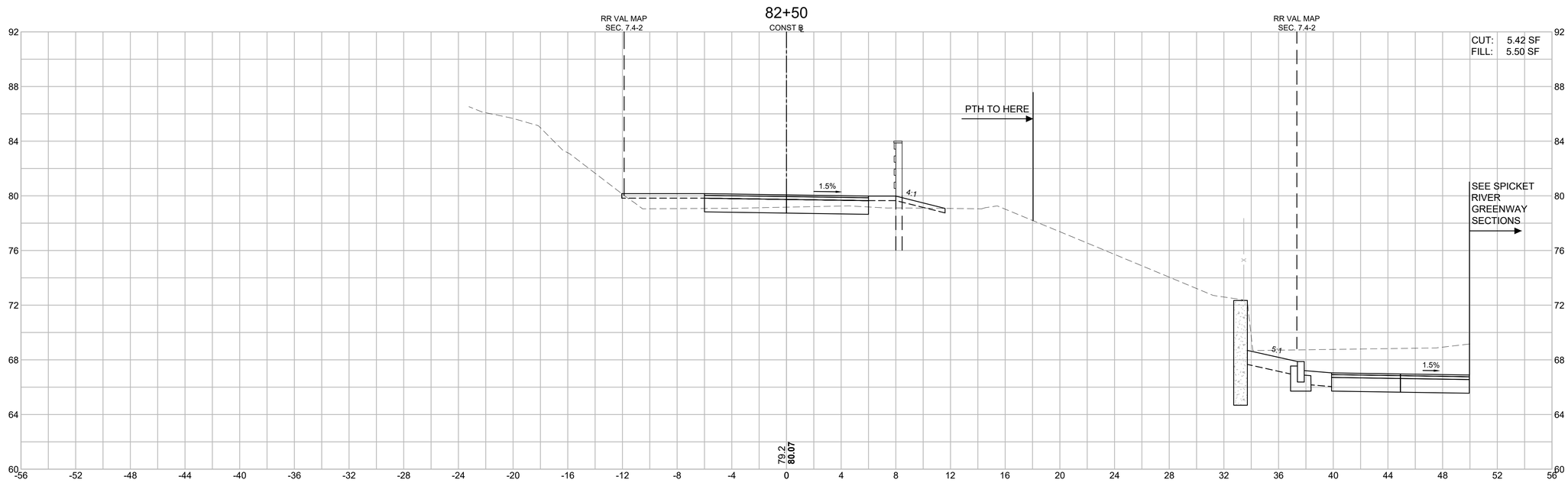

HOR. SCALE IN FEET
4 0 4 8
4 0 4 8
VER. SCALE IN FEET

LAWRENCE
LMRC RAIL TRAIL

STATE	FED. AID PROJ. NO.	SHEET NO.	TOTAL SHEETS
MA	CMQ-003S(733)X	227	245
PROJECT FILE NO.	608930		

LMRC RAIL TRAIL
CROSS SECTIONS - 55 OF 73

608930_HD1\(CROSS SECTIONS).DWG Plotted on 6-Sep-2024 8:27 AM

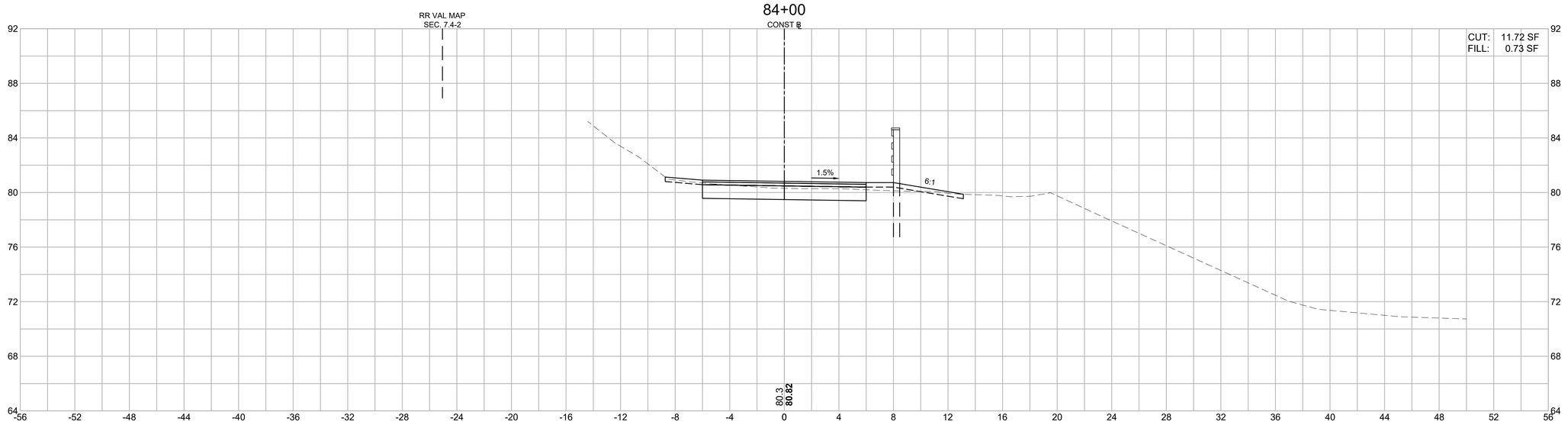

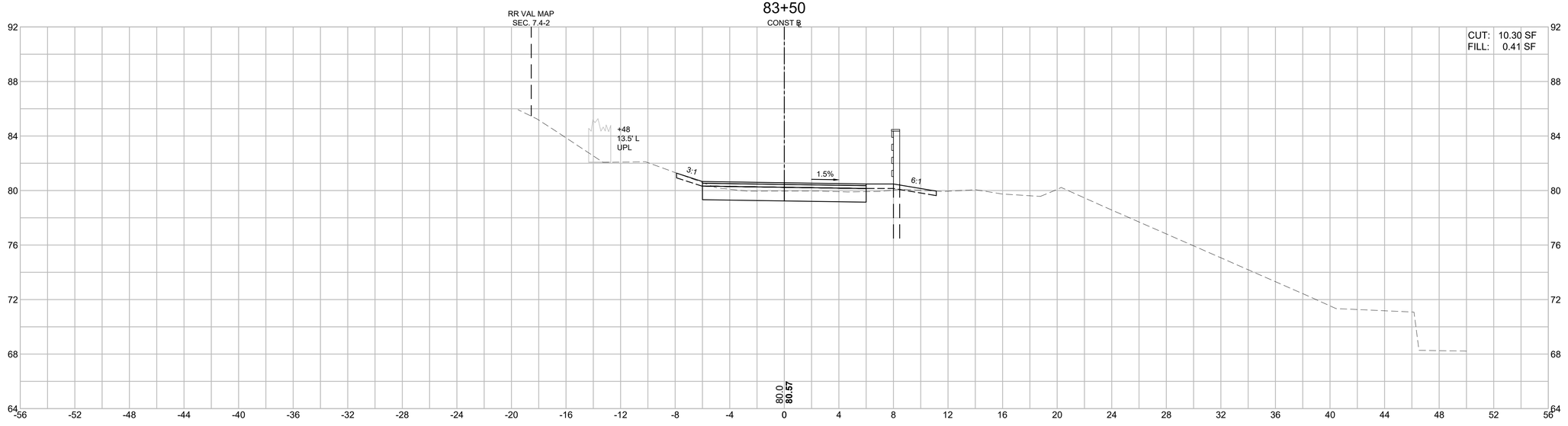

HOR. SCALE IN FEET
4 0 4 8
4 0 4 8
VER. SCALE IN FEET

LAWRENCE
LMRC RAIL TRAIL

STATE	FED. AID PROJ. NO.	SHEET NO.	TOTAL SHEETS
MA	CMQ-003S(733)X	228	245
PROJECT FILE NO.	608930		

LMRC RAIL TRAIL
CROSS SECTIONS - 56 OF 73

608930_HD11\CROSS SECTIONS\.DWG Plotted on 6-Sep-2024 8:27 AM

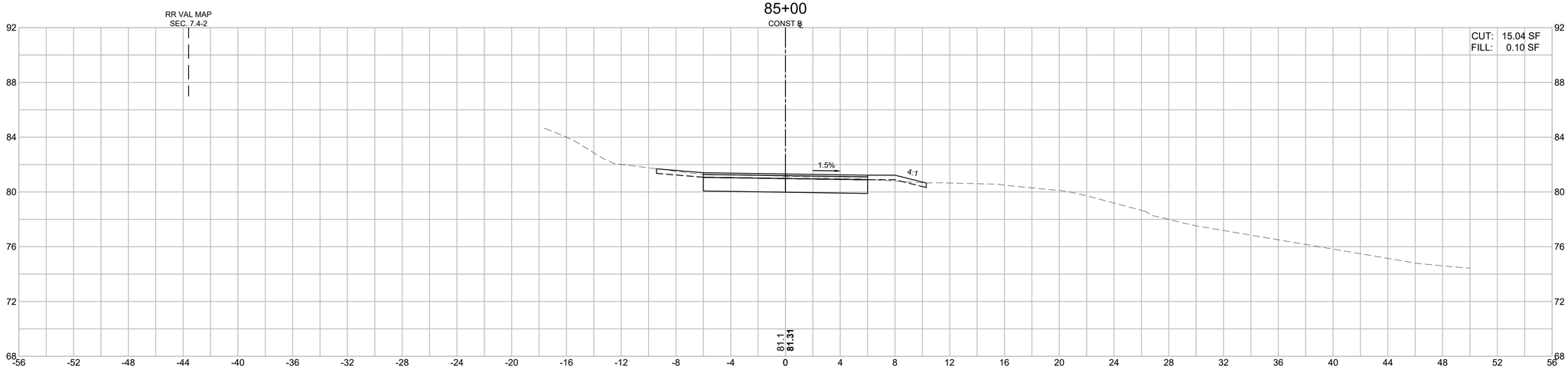

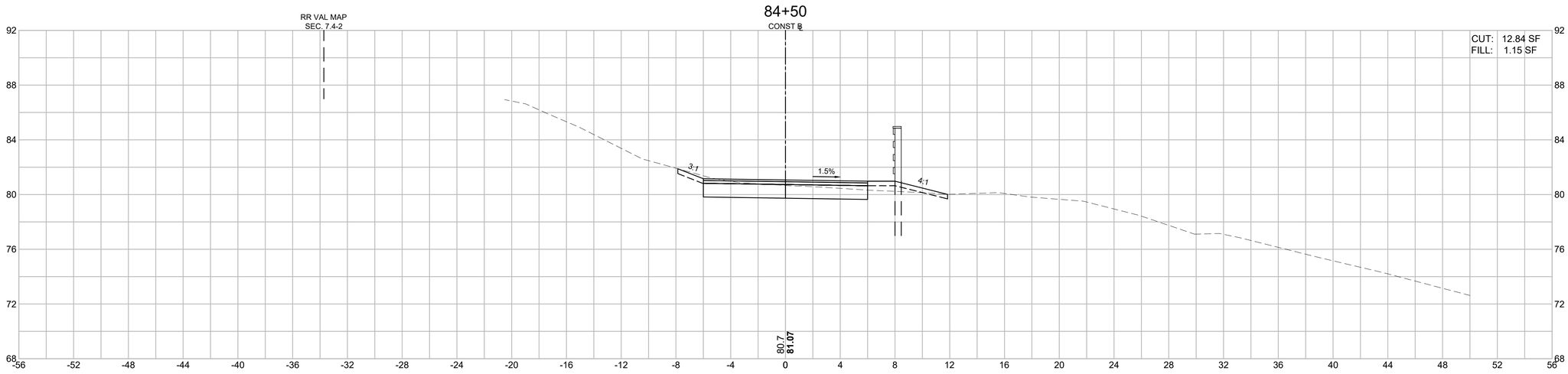

HOR. SCALE IN FEET
4 0 4 8
4 0 4 8
VER. SCALE IN FEET

LAWRENCE
LMRC RAIL TRAIL

STATE	FED. AID PROJ. NO.	SHEET NO.	TOTAL SHEETS
MA	CMQ-003S(733)X	229	245
PROJECT FILE NO.	608930		

LMRC RAIL TRAIL
CROSS SECTIONS - 57 OF 73

608930_HD11\CROSS SECTIONS).DWG Plotted on 6-Sep-2024 8:27 AM

86+50

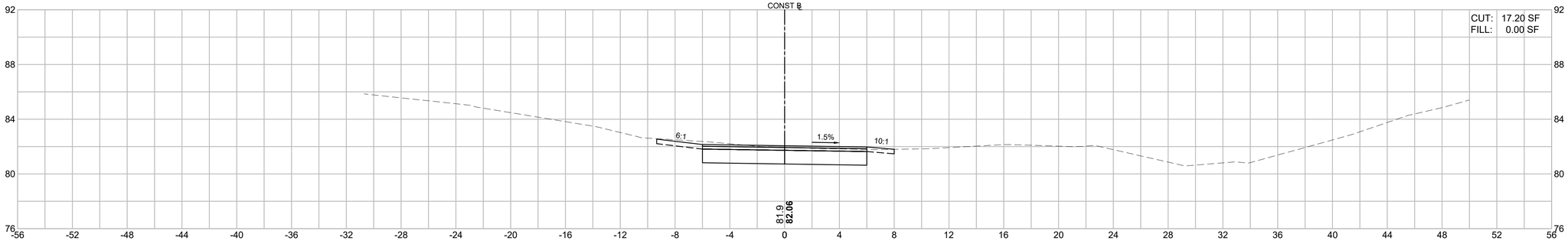

86+00

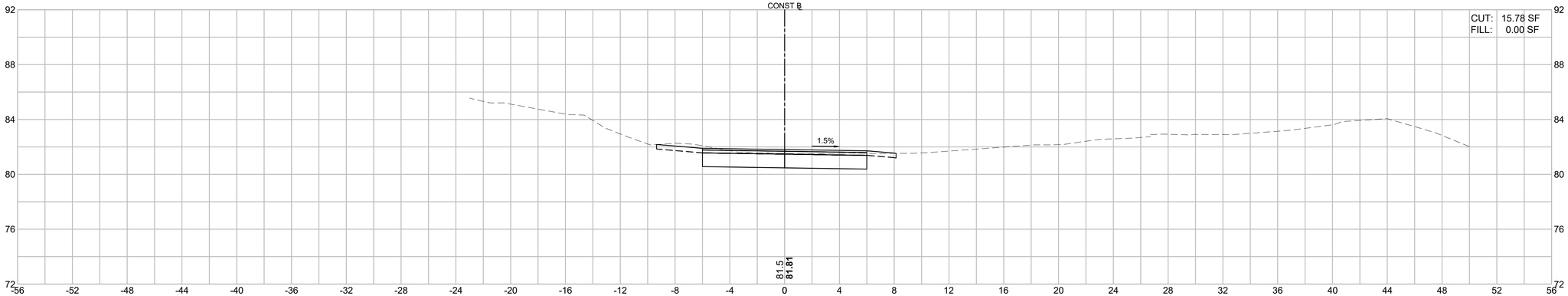

85+50

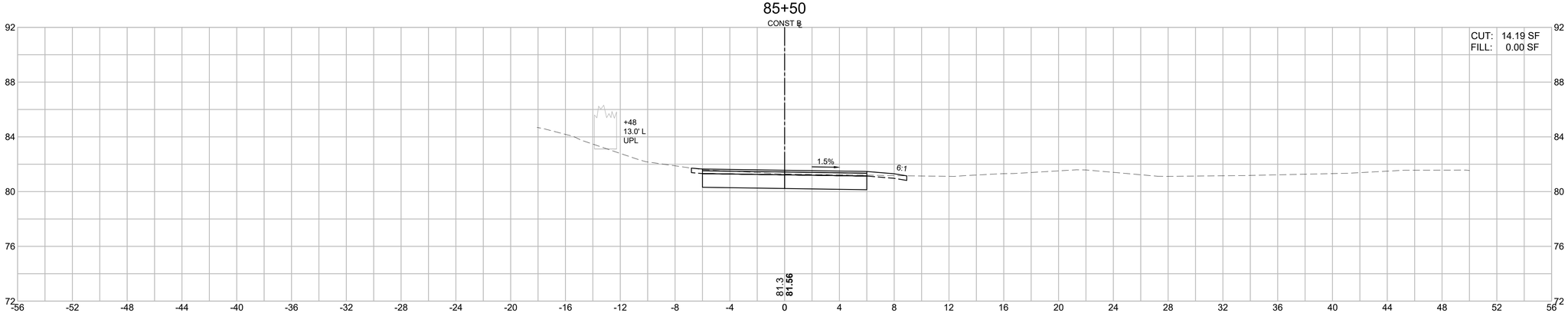

HOR. SCALE IN FEET
4 0 4 8
4 0 4 8
VER. SCALE IN FEET

LAWRENCE
LMRC RAIL TRAIL

STATE	FED. AID PROJ. NO.	SHEET NO.	TOTAL SHEETS
MA	CMQ-003S(733)X	230	245
PROJECT FILE NO.	608930		

LMRC RAIL TRAIL
CROSS SECTIONS - 58 OF 73

608930_HD11\(CROSS SECTIONS).DWG Plotted on 6-Sep-2024 8:28 AM

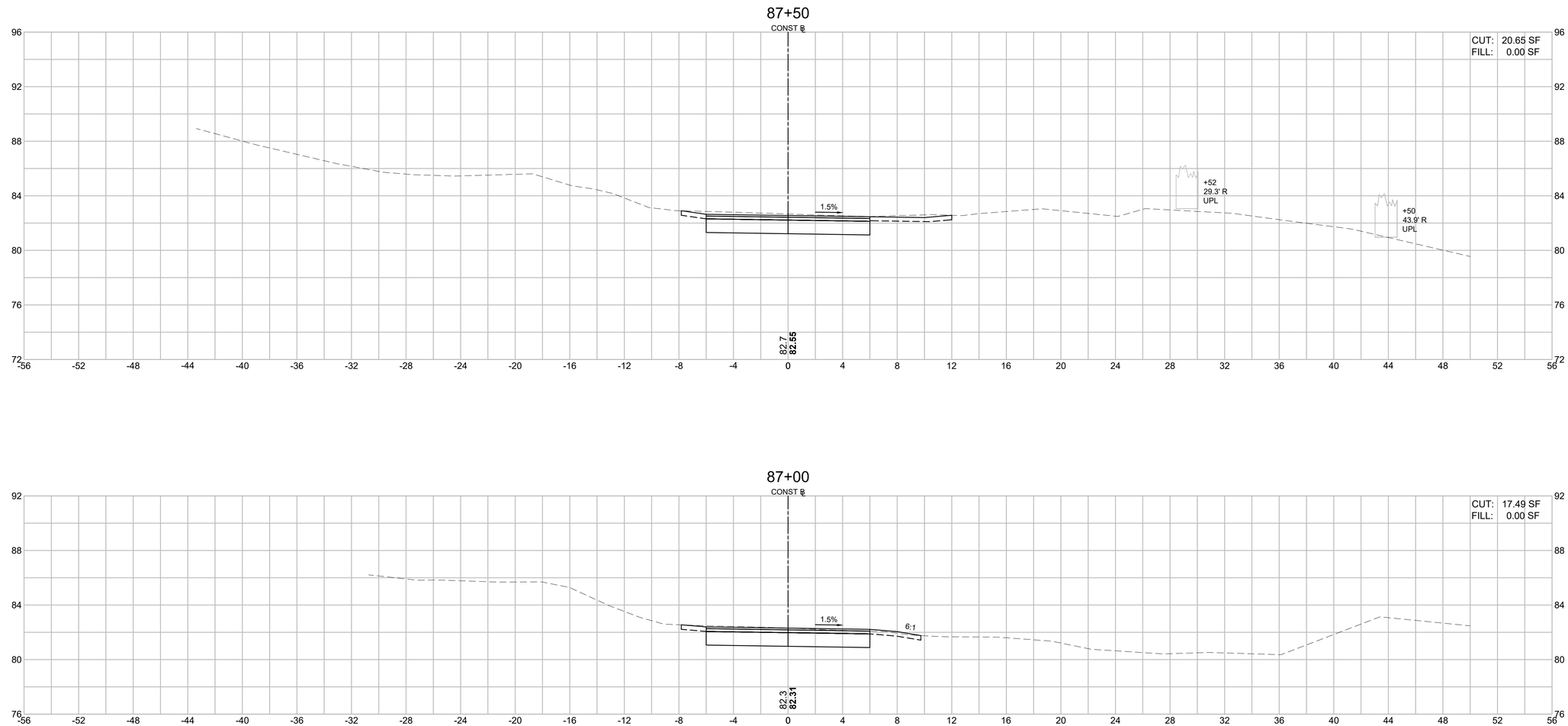

LAWRENCE
LMRC RAIL TRAIL

STATE	FED. AID PROJ. NO.	SHEET NO.	TOTAL SHEETS
MA	CMQ-003S(733)X	231	245
PROJECT FILE NO.	608930		

LMRC RAIL TRAIL
CROSS SECTIONS - 59 OF 73

608930_HD11\(CROSS SECTIONS).DWG Plotted on 6-Sep-2024 8:28 AM

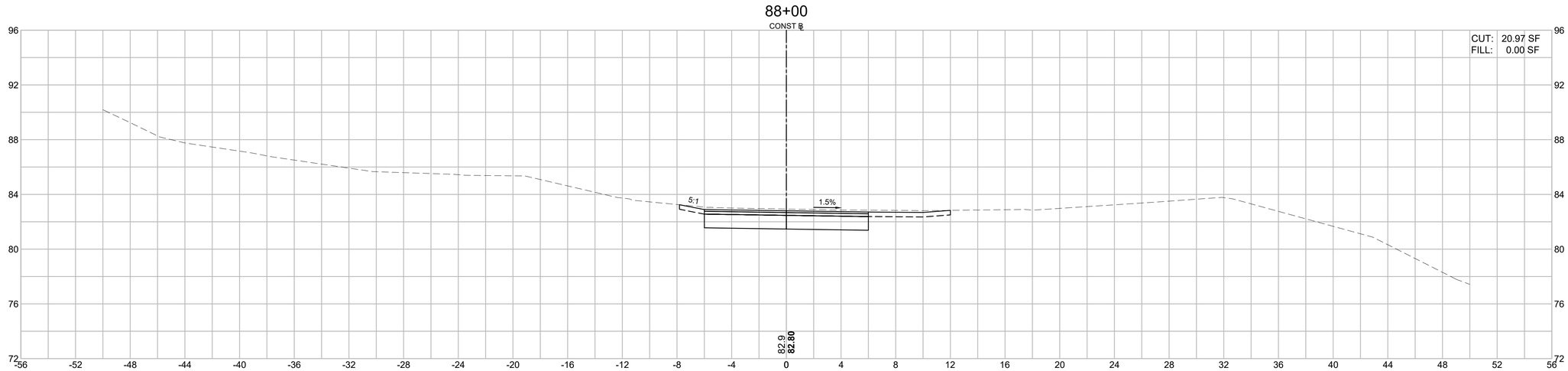

HOR. SCALE IN FEET
4 0 4 8
4 0 4 8
VER. SCALE IN FEET

LAWRENCE
LMRC RAIL TRAIL

STATE	FED. AID PROJ. NO.	SHEET NO.	TOTAL SHEETS
MA	CMQ-003S(733)X	232	245
	PROJECT FILE NO.	608903	

SPICKET RIVER GREENWAY CONNECTION
CROSS SECTIONS - 60 OF 73

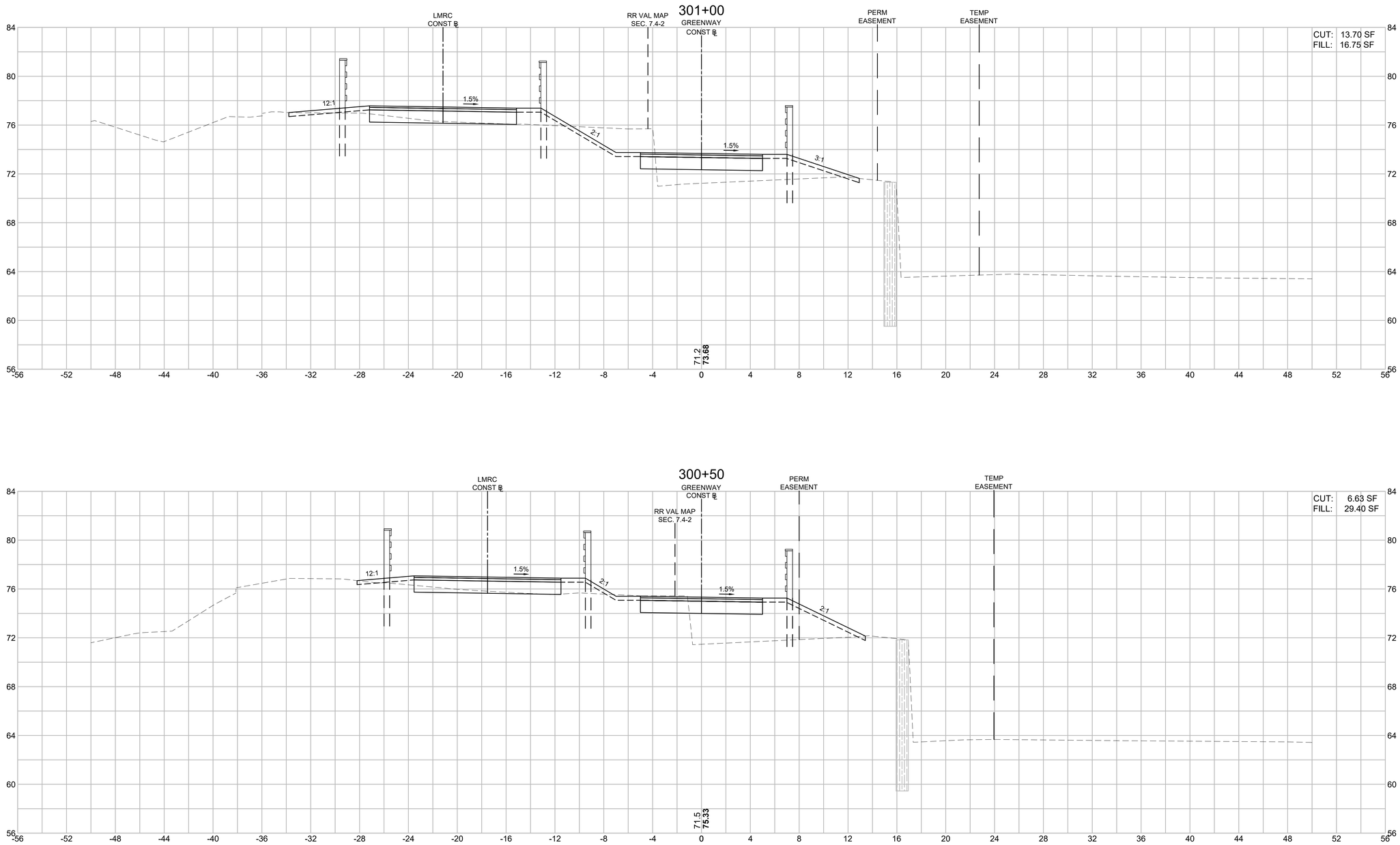

HOR. SCALE IN FEET
4 0 4 8
4 0 4 8
VER. SCALE IN FEET

608930_HD11\(CROSS SECTIONS)\(CONNECTIONS).DWG Plotted on 6-Sep-2024 7:40 AM

LAWRENCE
LMRC RAIL TRAIL

STATE	FED. AID PROJ. NO.	SHEET NO.	TOTAL SHEETS
MA	CMQ-003S(733)X	233	245
	PROJECT FILE NO.	608903	

SPICKET RIVER GREENWAY CONNECTION
CROSS SECTIONS - 61 OF 73

608930_HD11\(CROSS SECTIONS)\(CONNECTIONS).DWG Plotted on 6-Sep-2024 7:40 AM

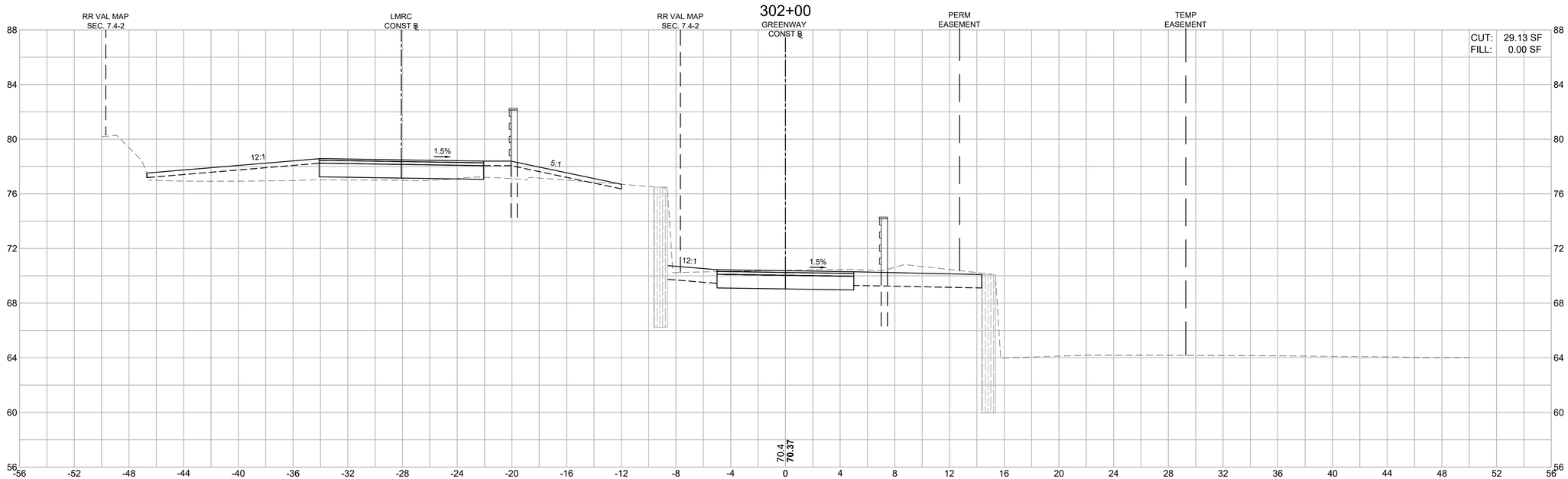

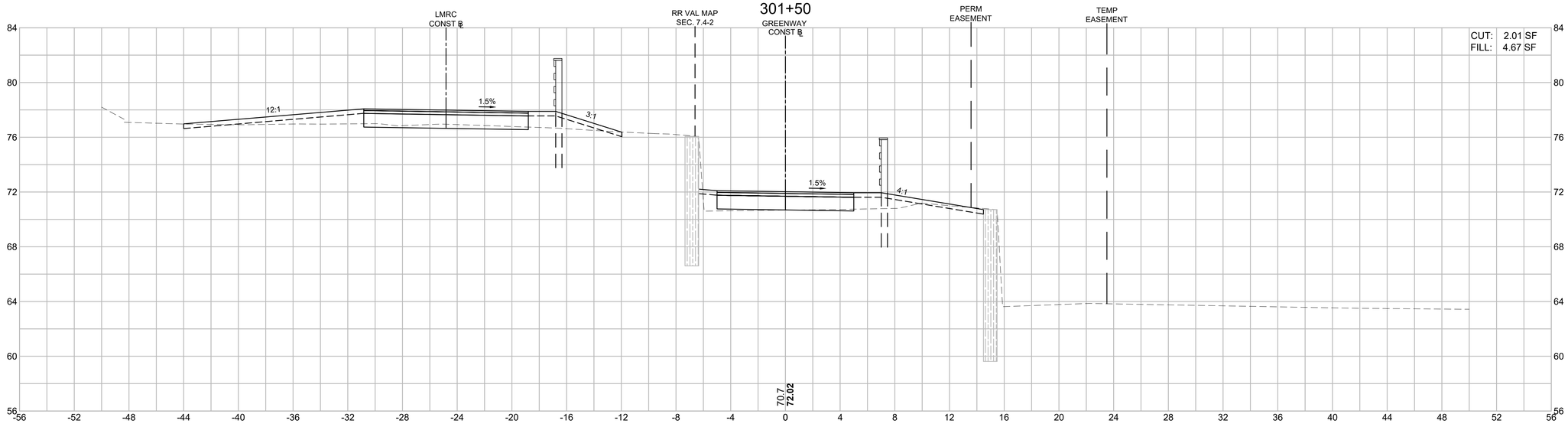

HOR. SCALE IN FEET
4 0 4 8
4 0 4 8
VER. SCALE IN FEET

LAWRENCE
LMRC RAIL TRAIL

STATE	FED. AID PROJ. NO.	SHEET NO.	TOTAL SHEETS
MA	CMQ-003S(733)X	234	245
	PROJECT FILE NO.	608903	

SPICKET RIVER GREENWAY CONNECTION
CROSS SECTIONS - 62 OF 73

608930_HD11\(CROSS SECTIONS)\(CONNECTIONS).DWG Plotted on 6-Sep-2024 7:40 AM

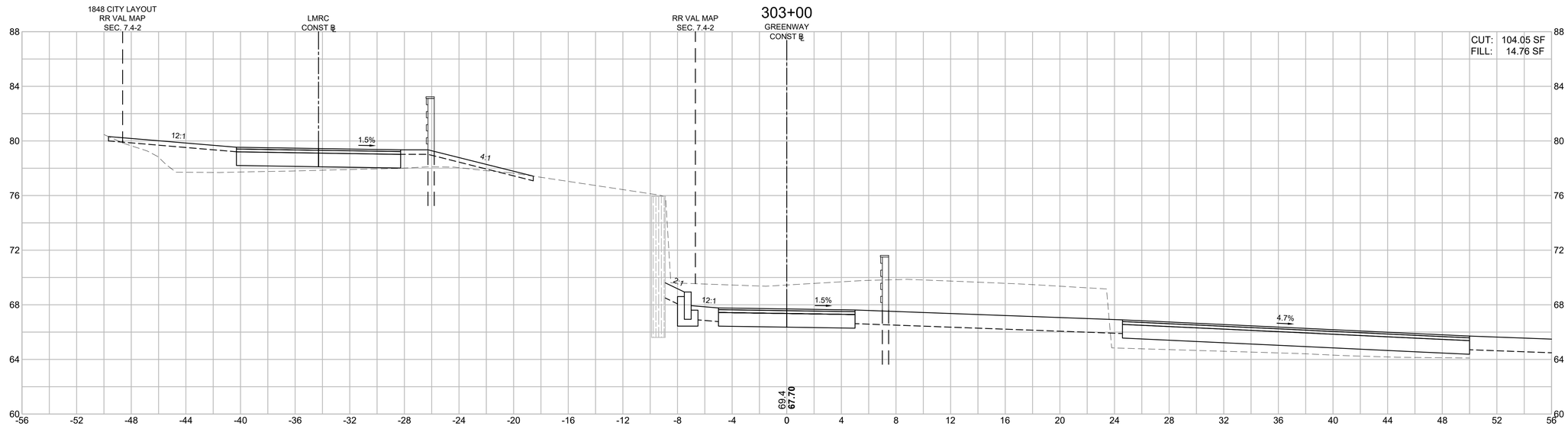

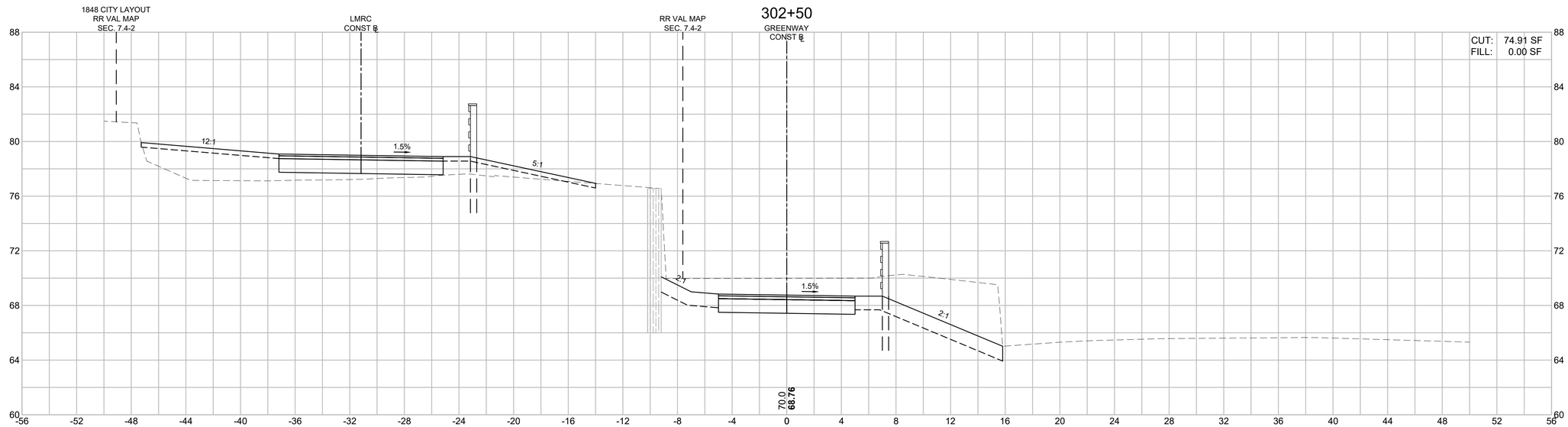

LAWRENCE
LMRC RAIL TRAIL

STATE	FED. AID PROJ. NO.	SHEET NO.	TOTAL SHEETS
MA	CMQ-003S(733)X	235	245
	PROJECT FILE NO.	608903	

SPICKET RIVER GREENWAY CONNECTION
CROSS SECTIONS - 63 OF 73

608930_HD11\CROSS SECTIONS\CONNECTIONS\.DWG Plotted on 6-Sep-2024 7:41 AM

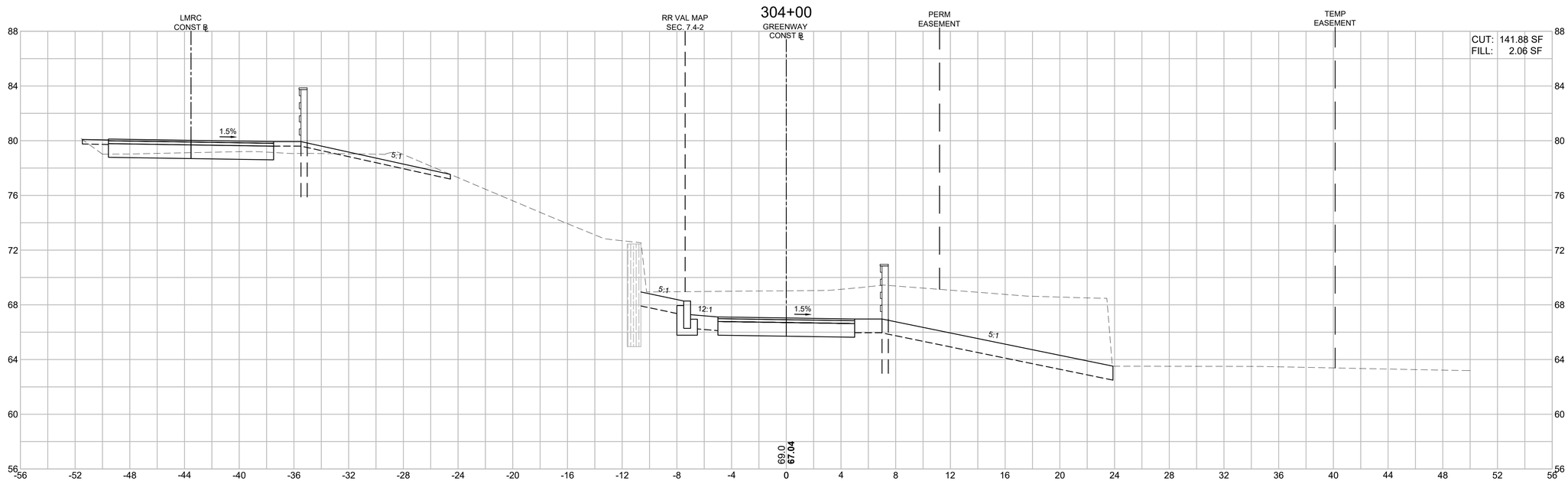

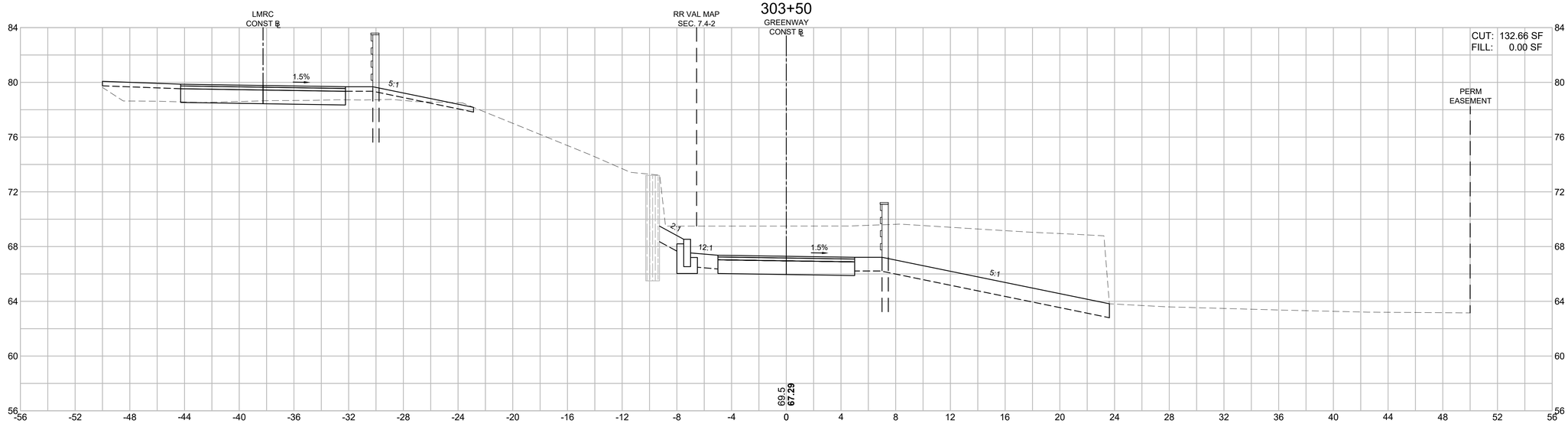

HOR. SCALE IN FEET
4 0 4 8
VER. SCALE IN FEET
4 0 4 8

LAWRENCE
LMRC RAIL TRAIL

STATE	FED. AID PROJ. NO.	SHEET NO.	TOTAL SHEETS
MA	CMQ-003S(733)X	236	245
	PROJECT FILE NO. 608903		

SPICKET RIVER GREENWAY CONNECTION
CROSS SECTIONS - 64 OF 73

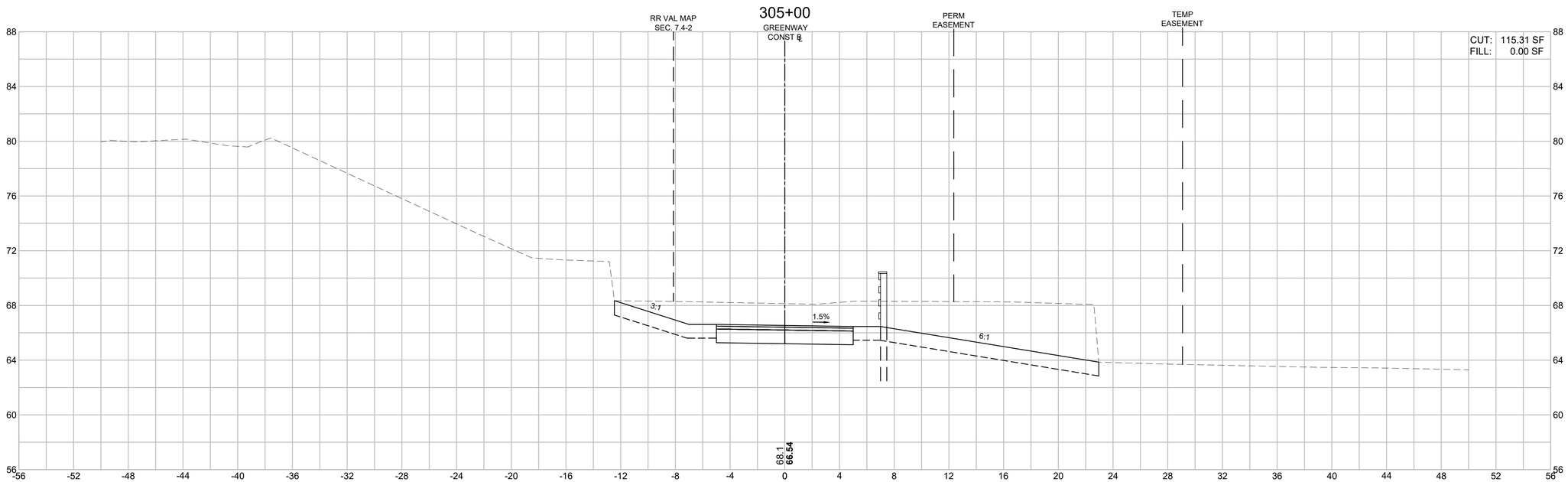

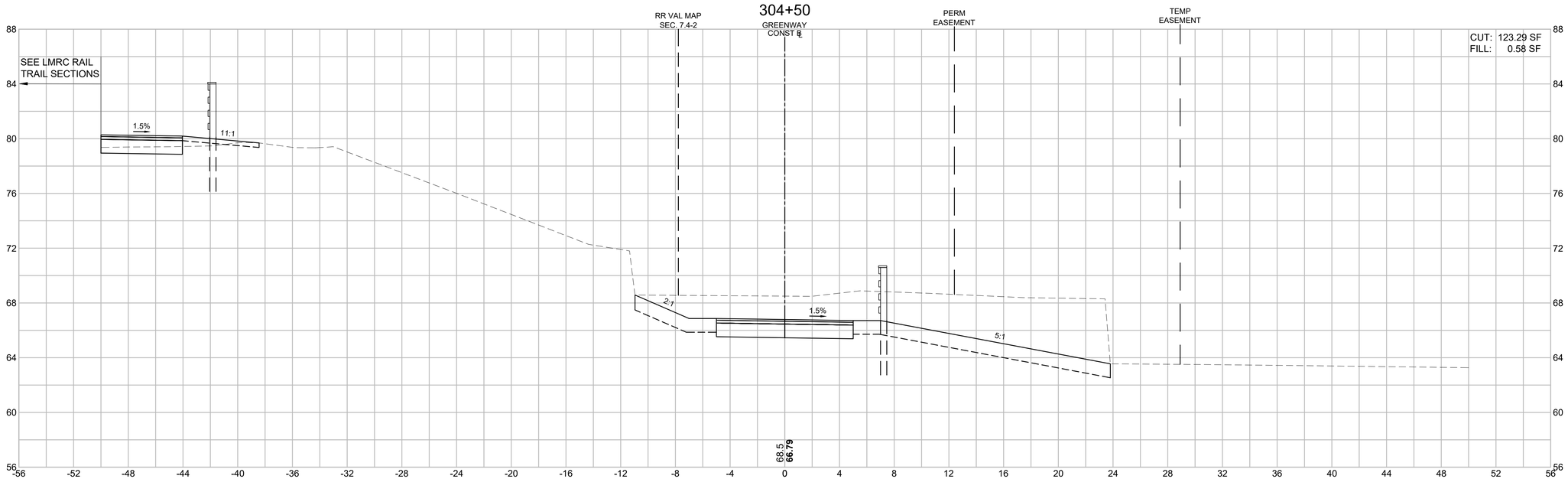

HOR. SCALE IN FEET
4 0 4 8
4 0 4 8
VER. SCALE IN FEET

608930_HD11\(CROSS SECTIONS)\(CONNECTIONS).DWG Plotted on 6-Sep-2024 7:41 AM

LAWRENCE
LMRC RAIL TRAIL

STATE	FED. AID PROJ. NO.	SHEET NO.	TOTAL SHEETS
MA	CMQ-003S(733)X	237	245
	PROJECT FILE NO. 608903		

SPICKET RIVER GREENWAY CONNECTION
CROSS SECTIONS - 65 OF 73

608930_HD11\CROSS SECTIONS\CONNECTIONS\.DWG Plotted on 6-Sep-2024 7:41 AM

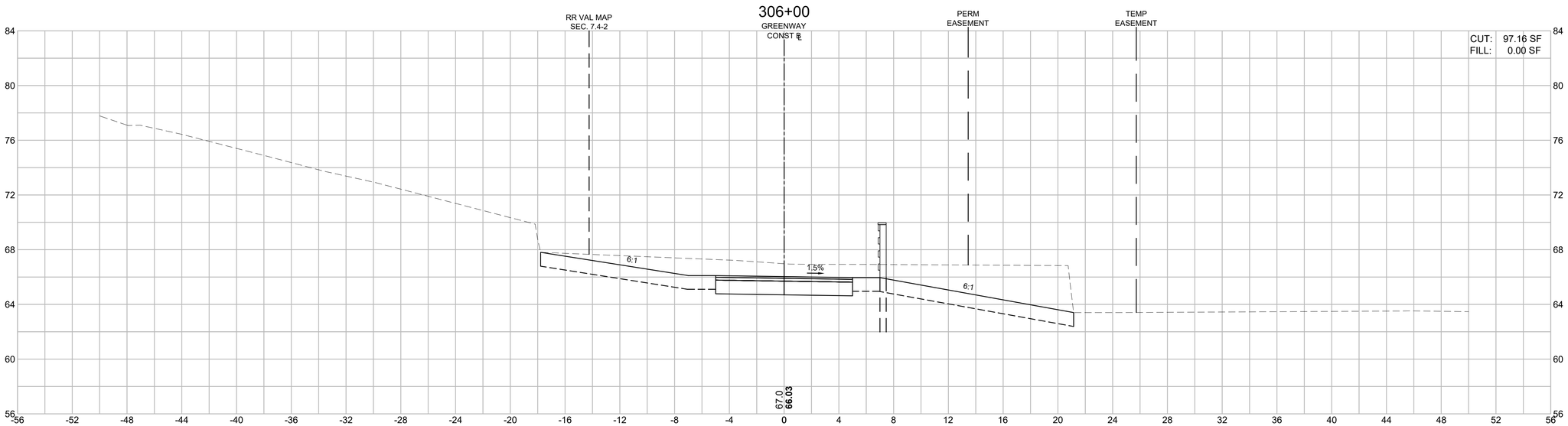

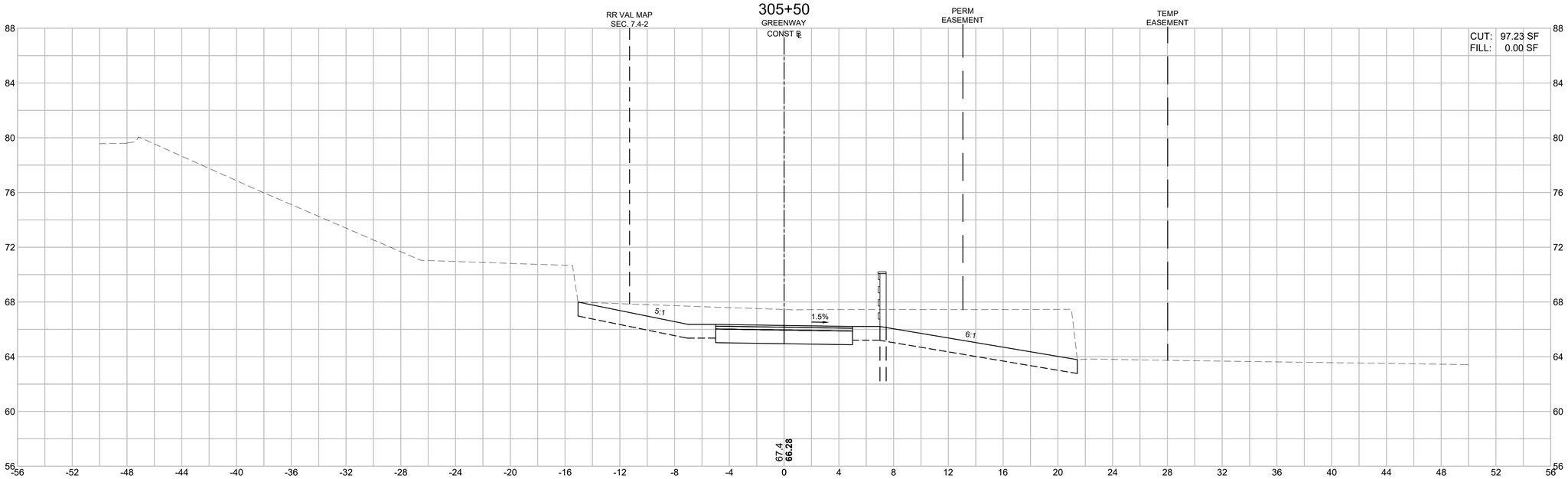

HOR. SCALE IN FEET
4 0 4 8
4 0 4 8
VER. SCALE IN FEET

LAWRENCE
LMRC RAIL TRAIL

STATE	FED. AID PROJ. NO.	SHEET NO.	TOTAL SHEETS
MA	CMQ-003S(733)X	238	245
	PROJECT FILE NO.	608903	

SPICKET RIVER GREENWAY CONNECTION
CROSS SECTIONS - 66 OF 73

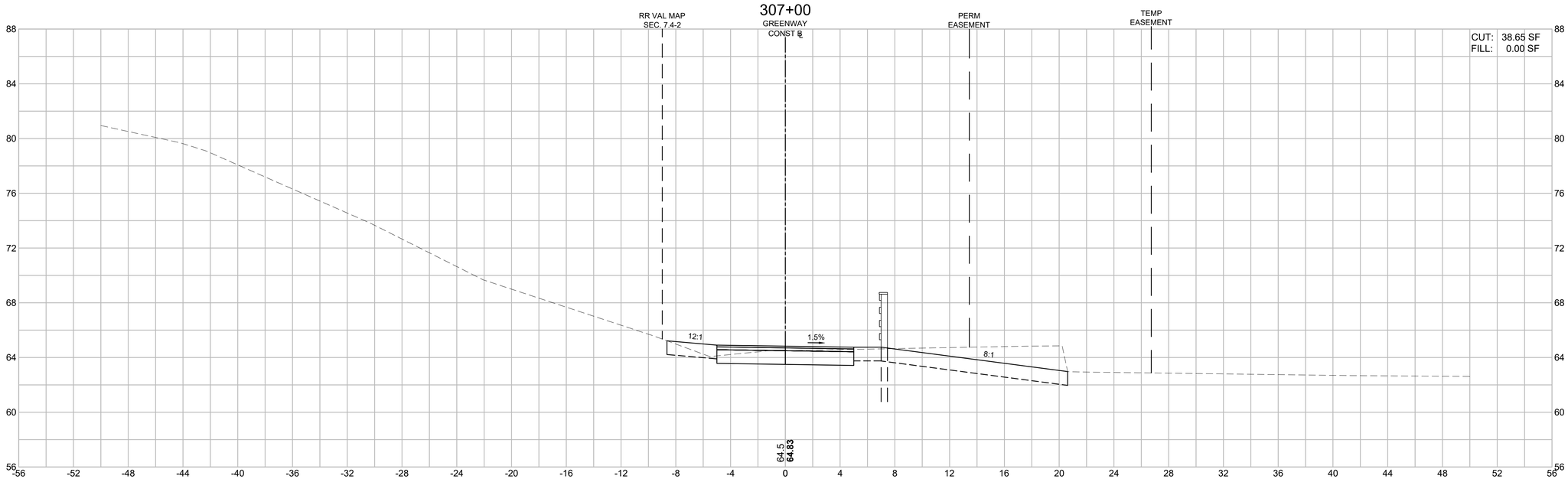

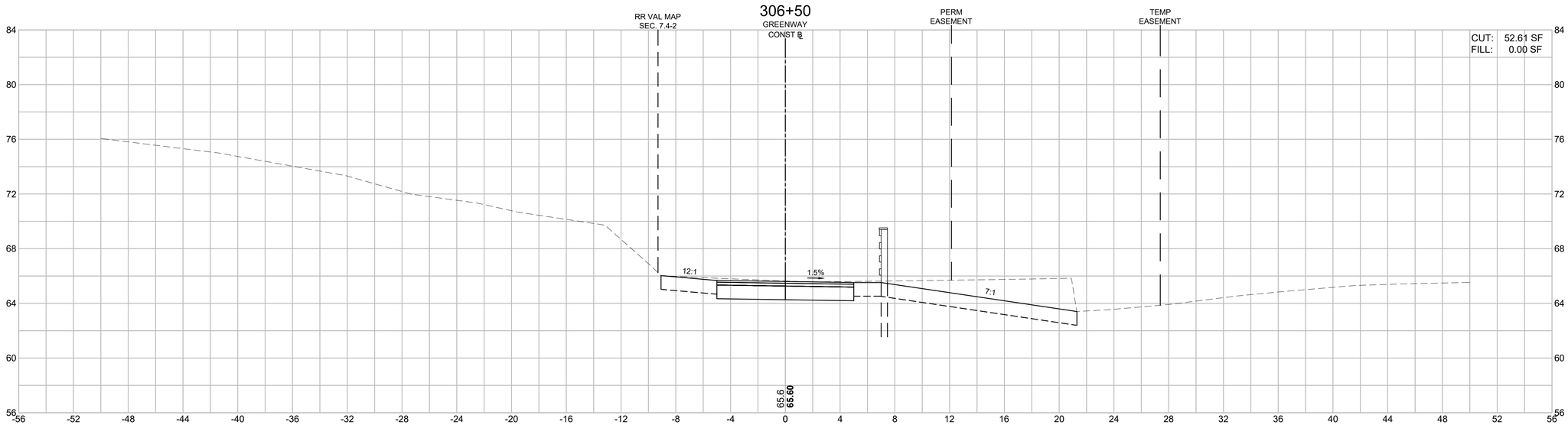

HOR. SCALE IN FEET
4 0 4 8
4 0 4 8
VER. SCALE IN FEET

608930_HD11\CROSS SECTIONS\CONNECTIONS.DWG Plotted on 6-Sep-2024 7:41 AM

LAWRENCE
LMRC RAIL TRAIL

STATE	FED. AID PROJ. NO.	SHEET NO.	TOTAL SHEETS
MA	CMQ-003S(733)X	239	245
PROJECT FILE NO.	608903		

SPICKET RIVER GREENWAY CONNECTION
CROSS SECTIONS - 67 OF 73

608930_HD11\(CROSS SECTIONS)\(CONNECTIONS).DWG Plotted on 6-Sep-2024 7:42 AM

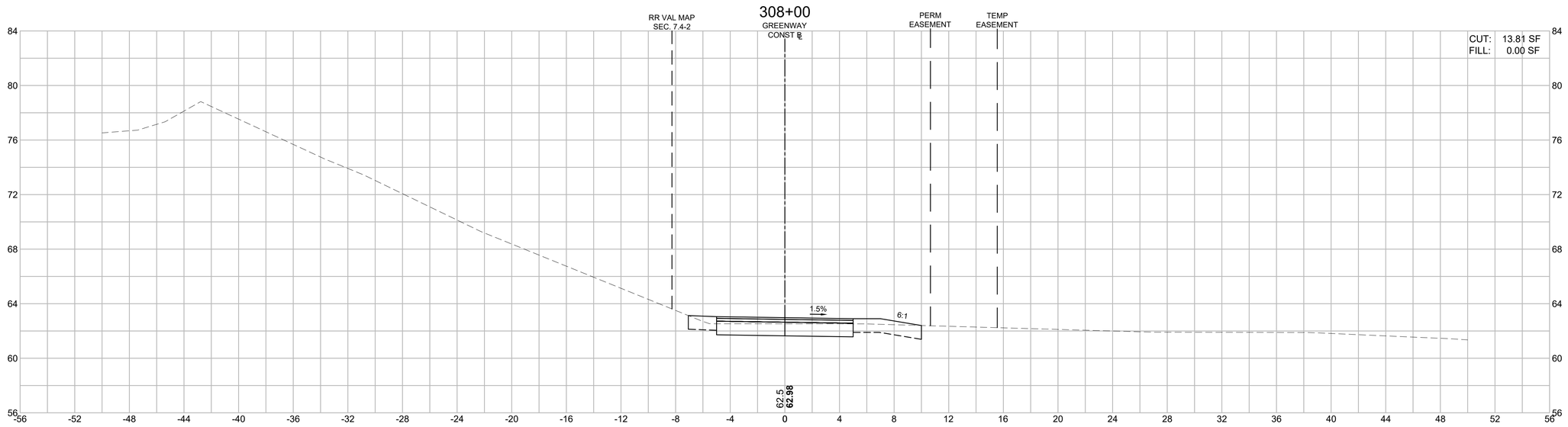

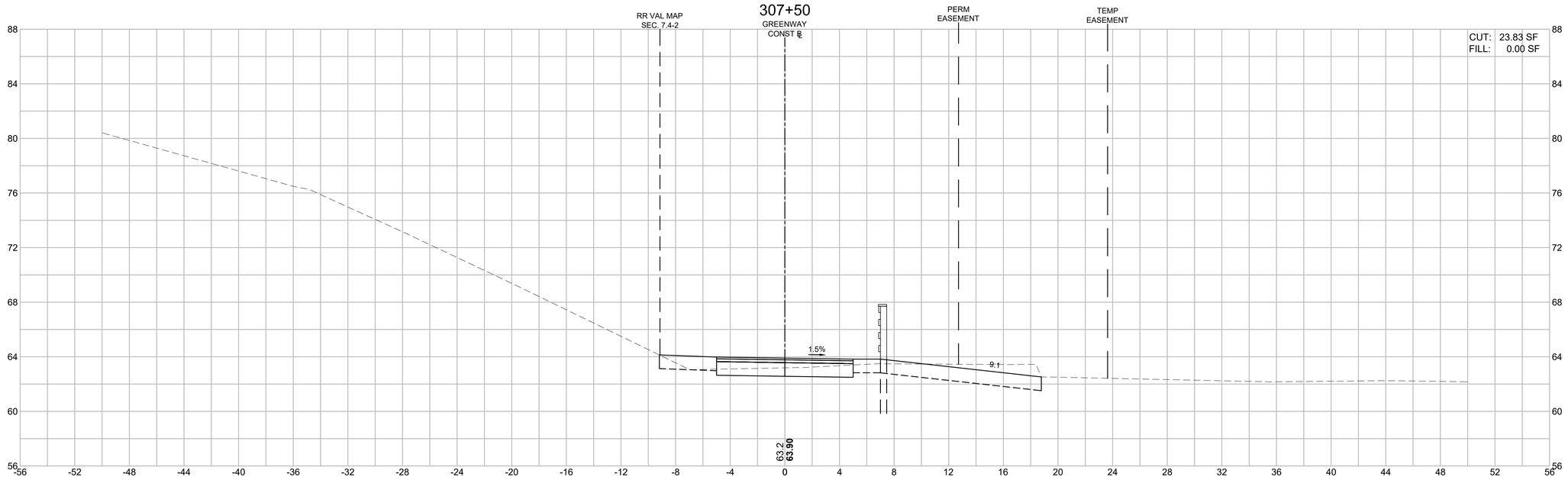

LAWRENCE
LMRC RAIL TRAIL

STATE	FED. AID PROJ. NO.	SHEET NO.	TOTAL SHEETS
MA	CMQ-003S(733)X	240	245
	PROJECT FILE NO.	608903	

SPICKET RIVER GREENWAY CONNECTION
CROSS SECTIONS - 68 OF 73

608930_HD11\CROSS SECTIONS\(CONNECTIONS).DWG Plotted on 6-Sep-2024 7:42 AM

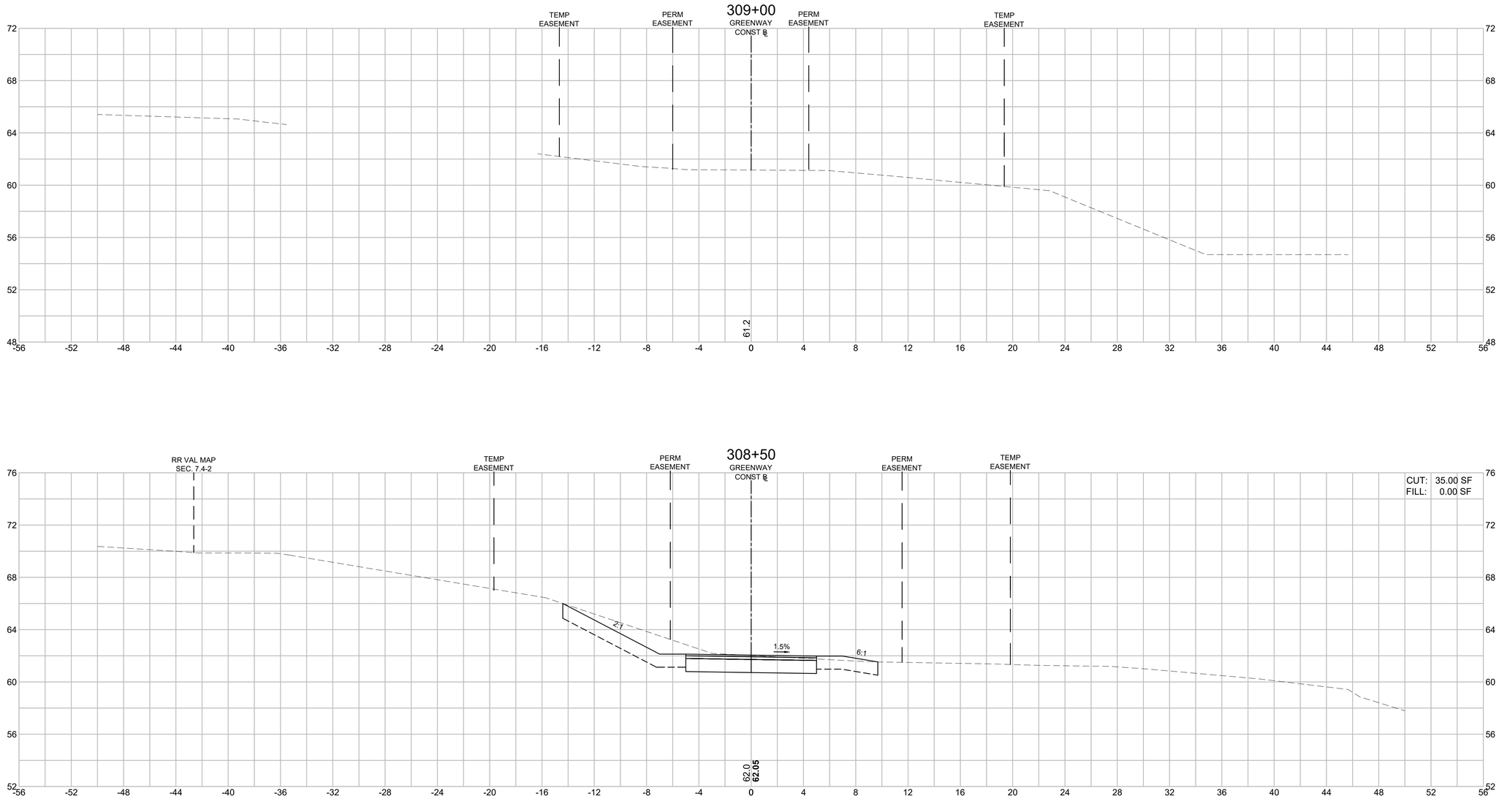

HOR. SCALE IN FEET
4 0 4 8
4 0 4 8
VER. SCALE IN FEET

LAWRENCE
LMRC RAIL TRAIL

STATE	FED. AID PROJ. NO.	SHEET NO.	TOTAL SHEETS
MA	CMQ-003S(733)X	241	245
	PROJECT FILE NO. 608903		

MANCHESTER STREET PARK CONNECTION
CROSS SECTIONS - 69 OF 73

608930_HD11\CROSS SECTIONS\ (CONNECTIONS).DWG Plotted on 6-Sep-2024 7:42 AM

401+50

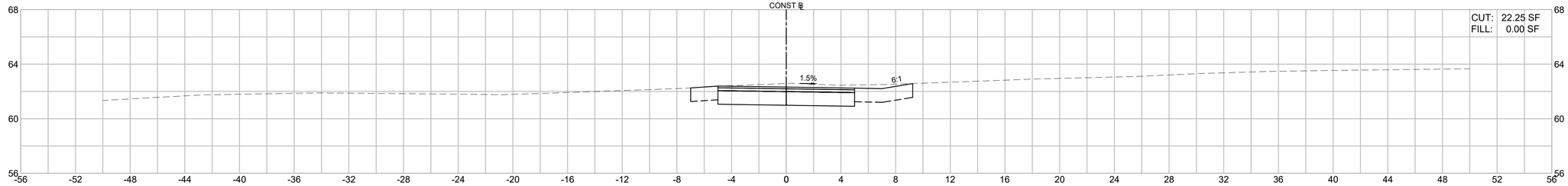

401+00

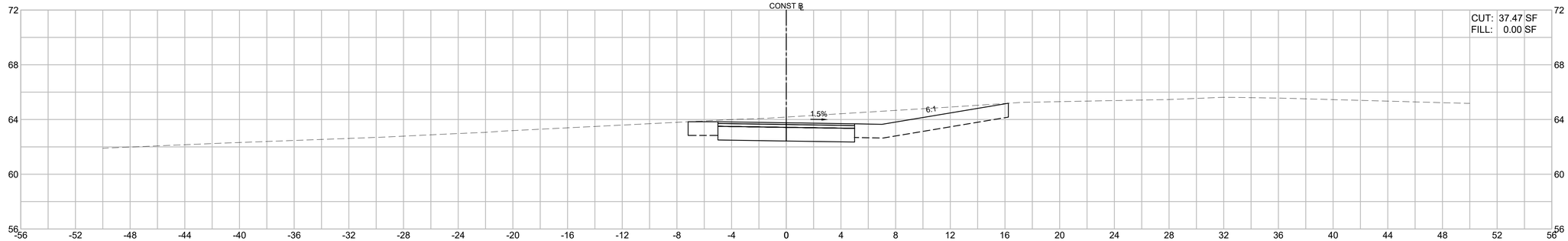

400+50

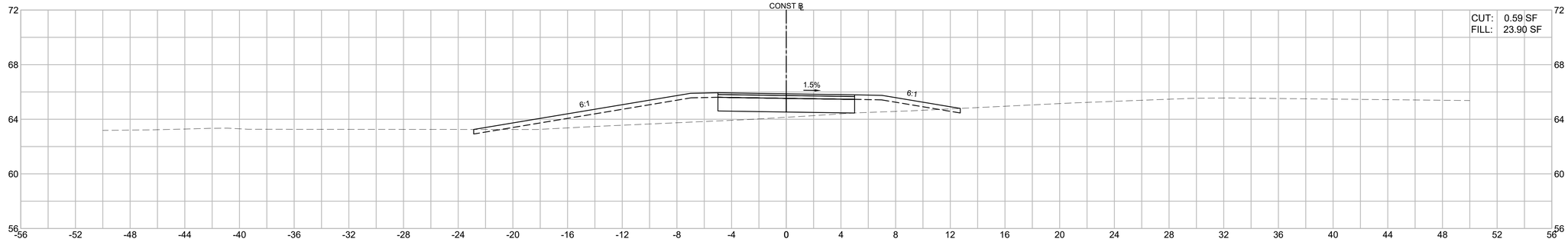

HOR. SCALE IN FEET
4 0 4 8
4 0 4 8
VER. SCALE IN FEET

LAWRENCE
LMRC RAIL TRAIL

STATE	FED. AID PROJ. NO.	SHEET NO.	TOTAL SHEETS
MA	CMQ-003S(733)X	242	245
PROJECT FILE NO.	608903		

ESSEX STREET
CROSS SECTIONS - 70 OF 73

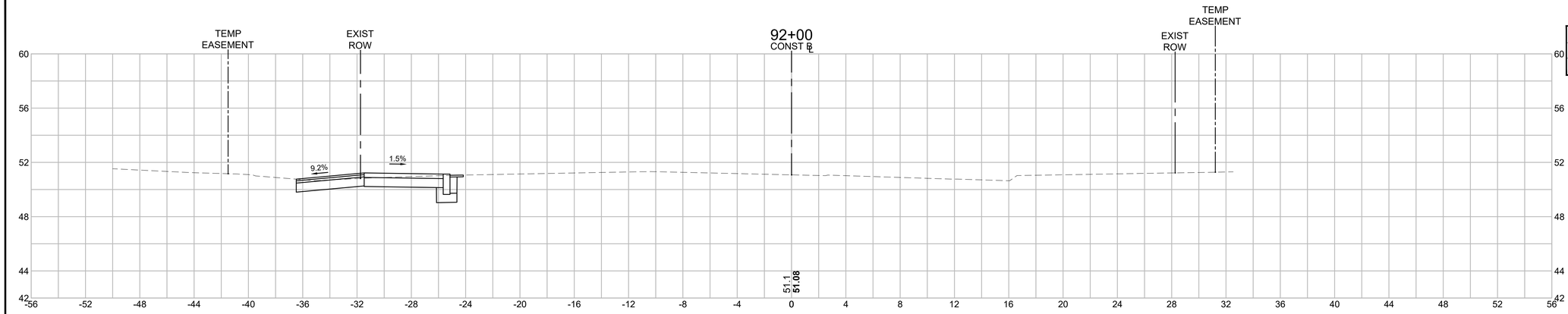

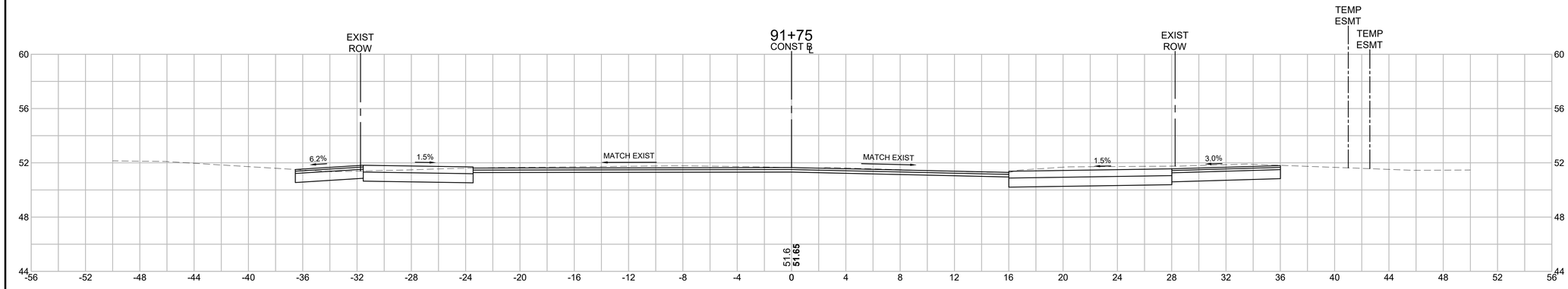

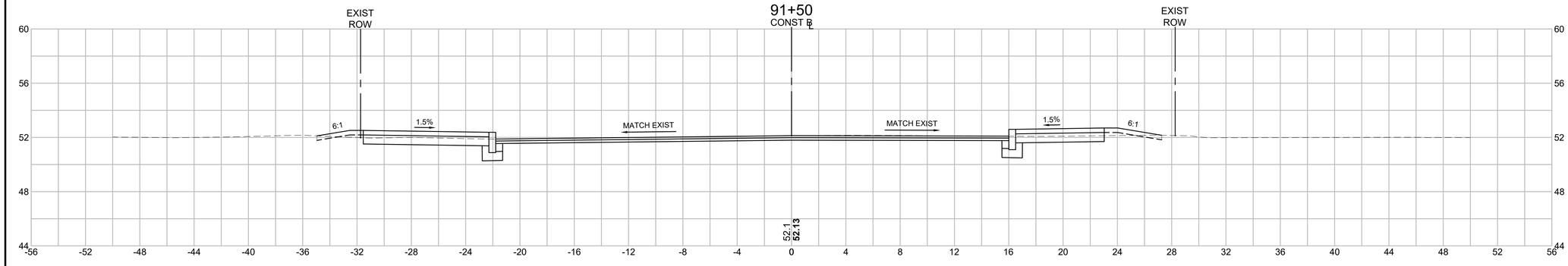

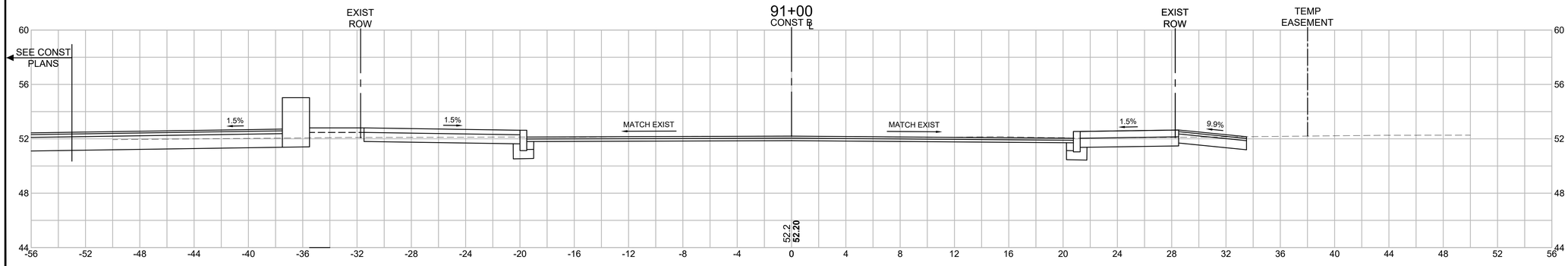

HOR. SCALE IN FEET
4 0 4 8
4 0 4 8
VER. SCALE IN FEET

608930_HD11(CROSS SECTIONS) (SIDE STREETS).DWG Plotted on 6-Sep-2024 7:24 AM

LAWRENCE
LMRC RAIL TRAIL

STATE	FED. AID PROJ. NO.	SHEET NO.	TOTAL SHEETS
MA	CMQ-003S(733)X	243	245
PROJECT FILE NO.	608903		

HAVERHILL STREET
CROSS SECTIONS - 71 OF 73

608930_HD11(CROSS SECTIONS)(SIDE STREETS).DWG Plotted on 6-Sep-2024 7:24 AM

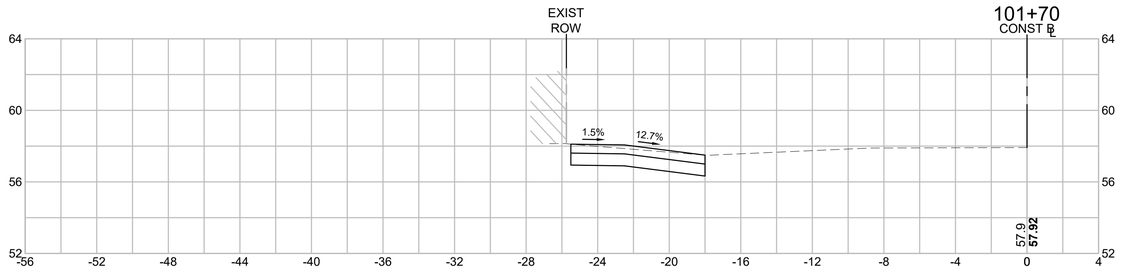

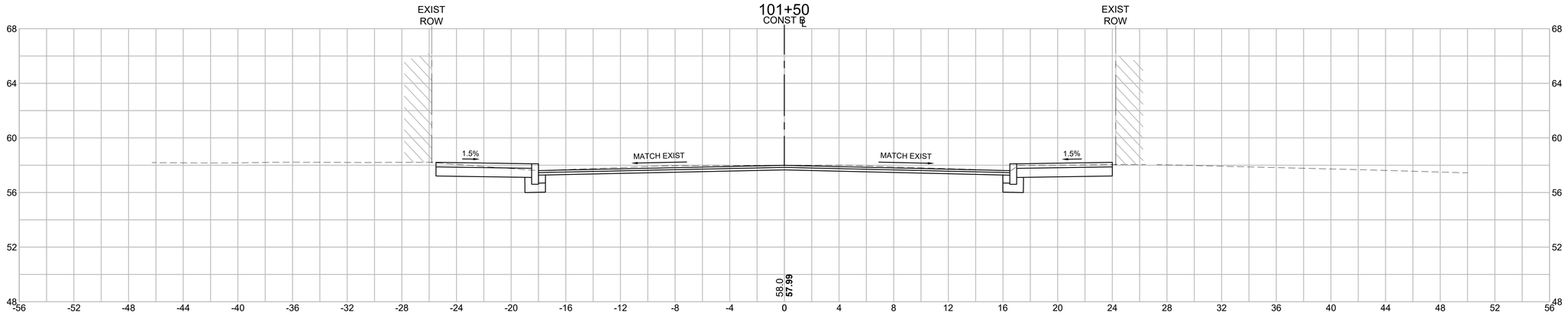

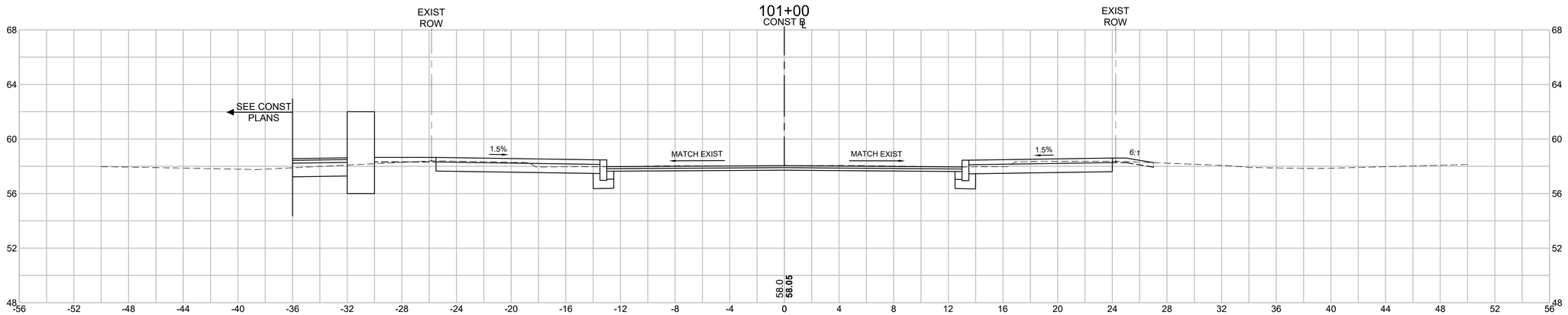

HOR. SCALE IN FEET
4 0 4 8
4 0 4 8
VER. SCALE IN FEET

LAWRENCE
LMRC RAIL TRAIL

STATE	FED. AID PROJ. NO.	SHEET NO.	TOTAL SHEETS
MA	CMQ-003S(733)X	244	245
PROJECT FILE NO.	608930		

LOWELL STREET
CROSS SECTIONS - 72 OF 73

608930_HDS\PROF XSECT\.DWG Plotted on 6-Sep-2024 7:25 AM

510+50

LOWELL STREET ℄

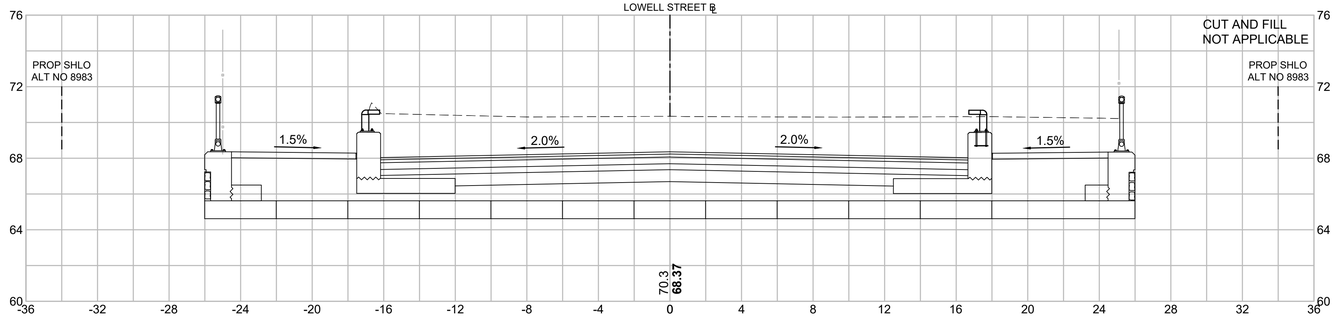

510+00

LOWELL STREET ℄

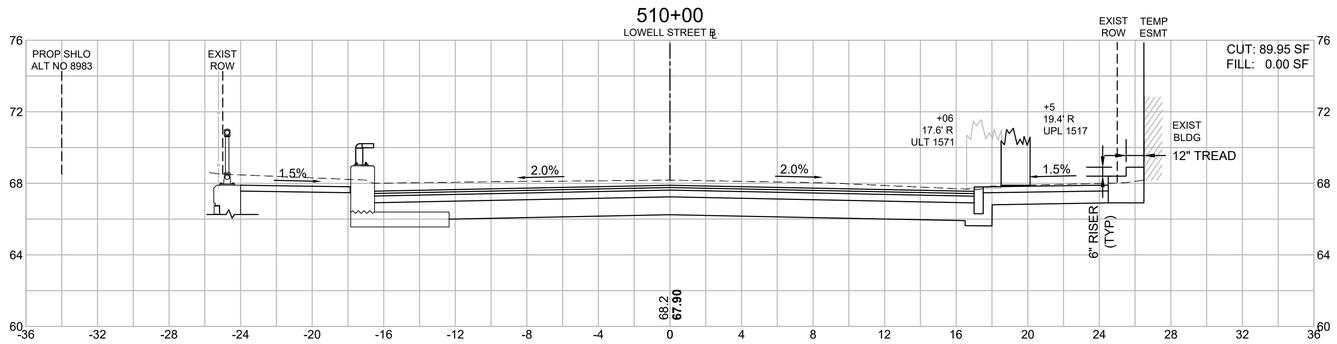

509+56

START HMA MILL & OVERLAY TRANSITION

LOWELL STREET ℄

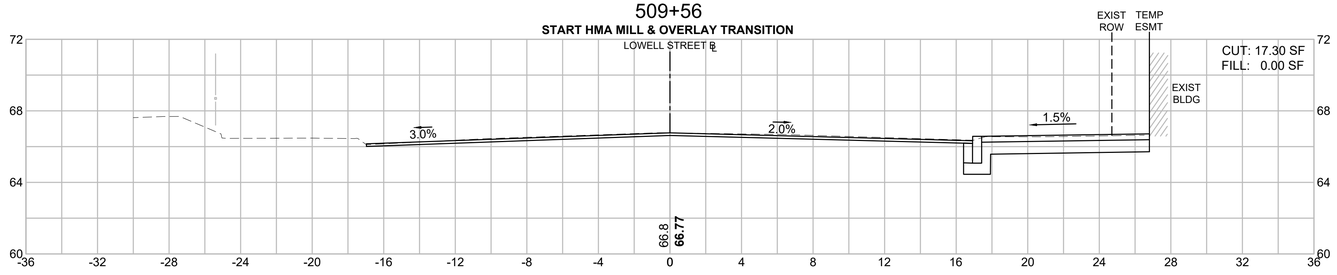

509+50

LOWELL STREET ℄

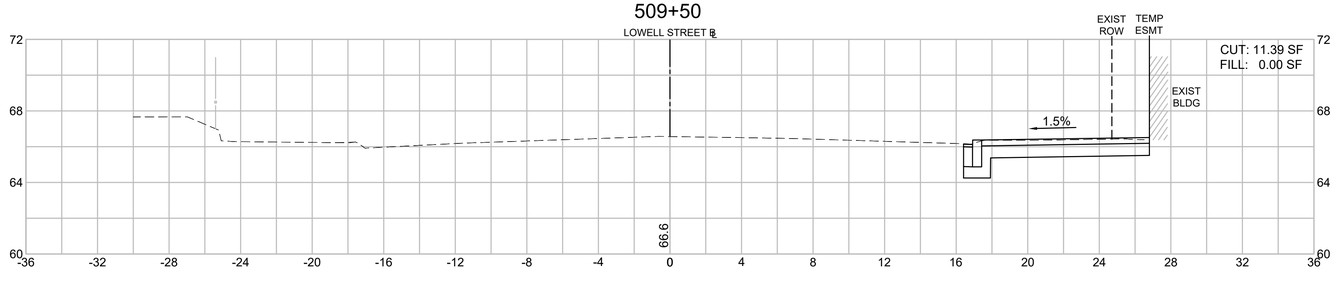

HOR. SCALE IN FEET
4 0 4 8
4 0 4 8
VER. SCALE IN FEET

LAWRENCE
LMRC RAIL TRAIL

STATE	FED. AID PROJ. NO.	SHEET NO.	TOTAL SHEETS
MA	CMQ-003S(733)X	245	245
PROJECT FILE NO.	608930		

LOWELL STREET
CROSS SECTIONS - 73 OF 73

608930_HDS\PROF XSECT\.DWG Plotted on 6-Sep-2024 7:25 AM

511+76

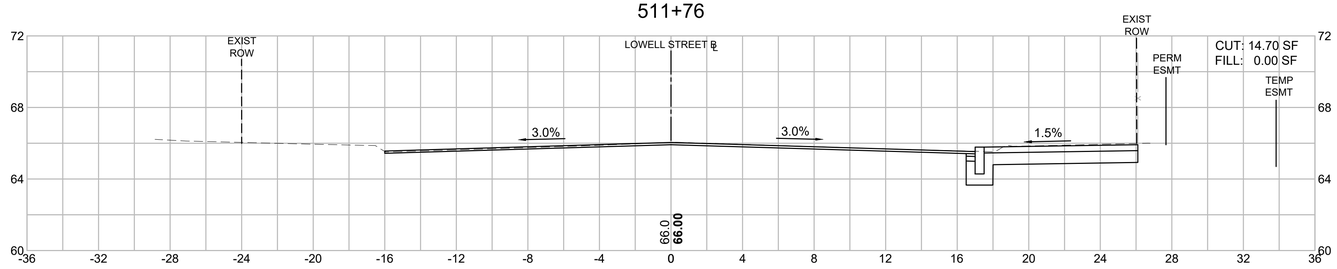

511+50

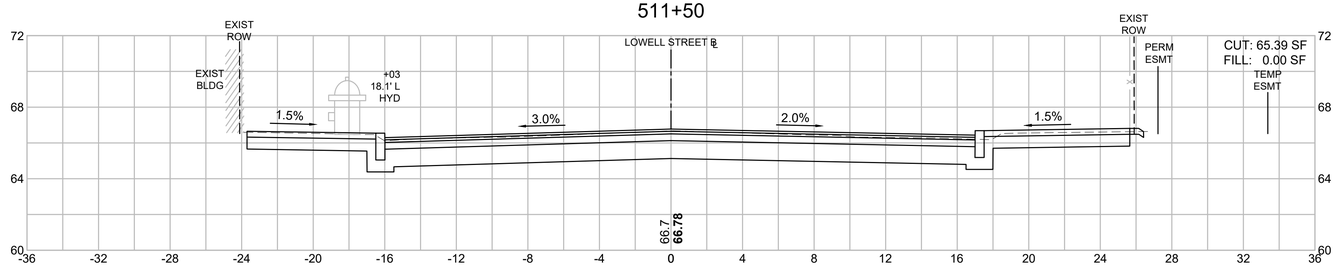

511+25

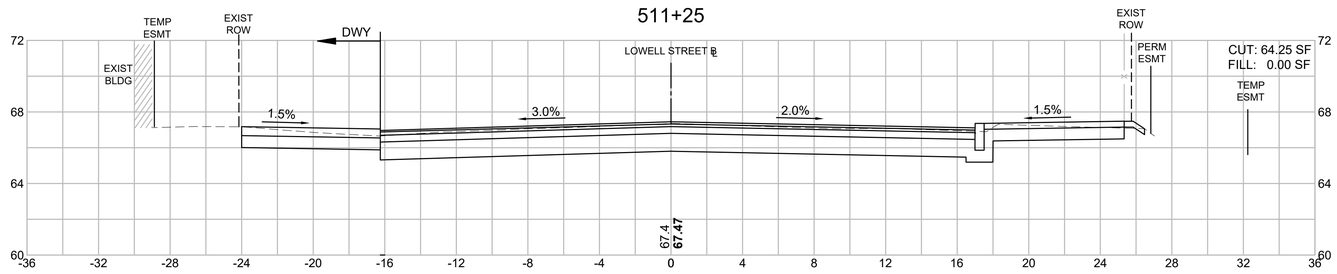

511+00

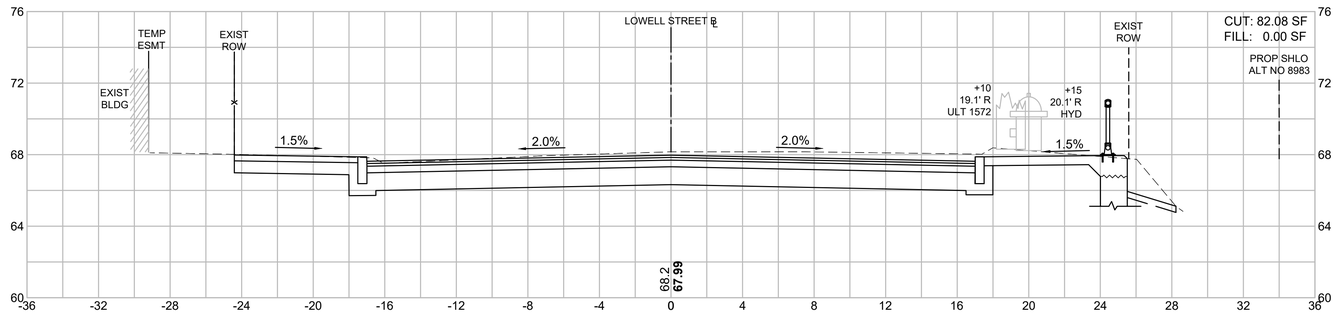

HOR. SCALE IN FEET
4 0 4 8
4 0 4 8
VER. SCALE IN FEET

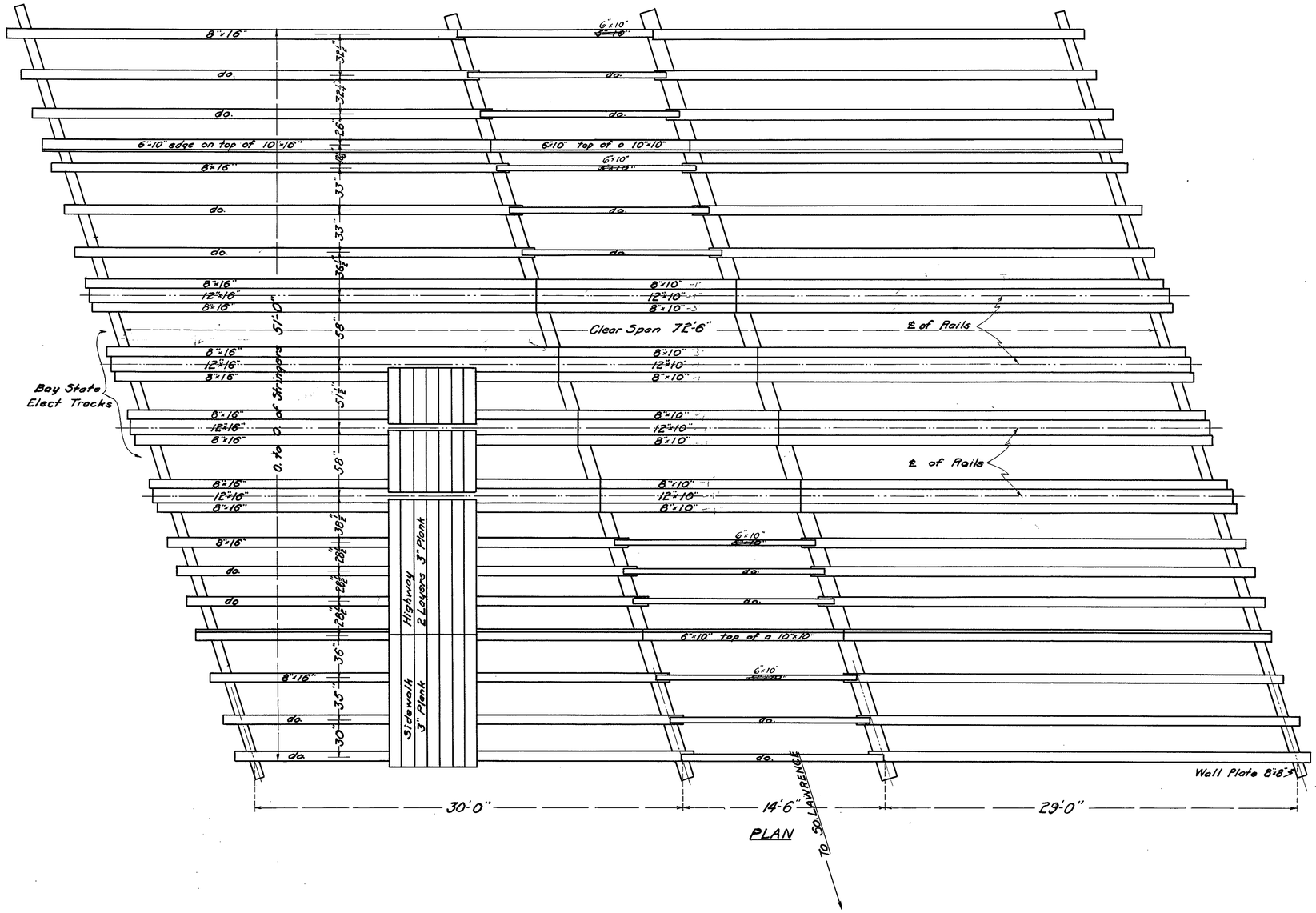

PLAN

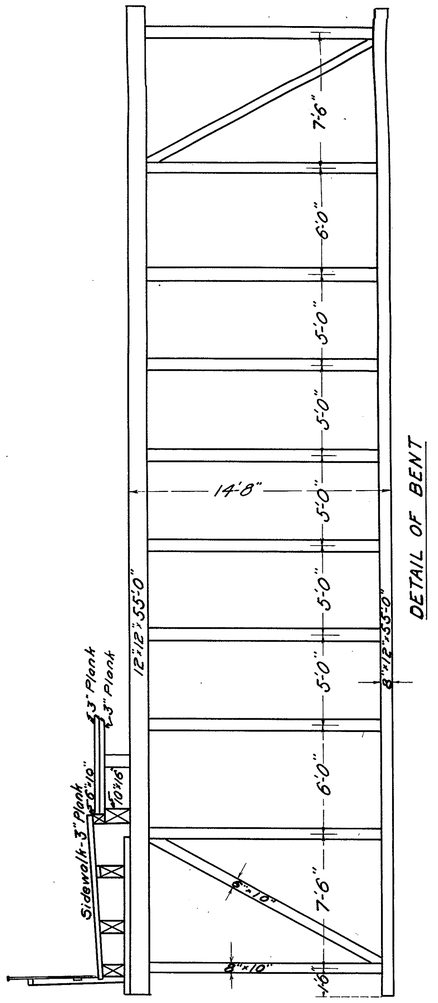

DETAIL OF BENT

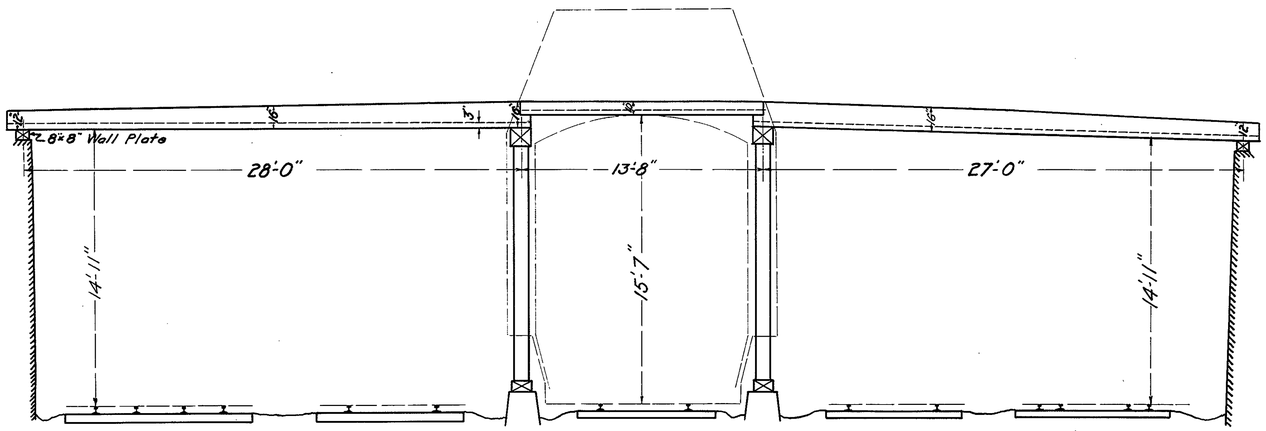

ELEVATION PERPENDICULAR TO BENTS

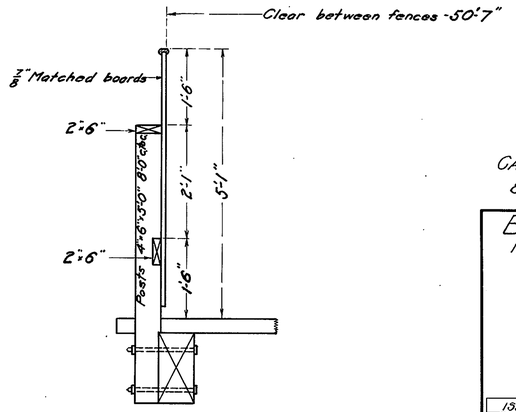

DETAIL OF FENCE
Scale ¾"=1'-0"

BR. No. L-4-27

CAPACITY.
8¼ TON AUTO TRUCKS SIGN 1

Sheet	Packet
8	3
Folio	Plan
1	21

BOSTON AND MAINE RAILROAD
Portland Div. Manch. & Lawrence Br.
Valuation Section N°. 74
BRIDGE N°. 193
Lowell St. No. Lawrence, Mass.
General Plan
Drawn from field measurements
Scales ¼" & ¾"=1'-0"
From Office of Chief Engineer

ISSUE		
A	7-6-17	Drawn by-C.M.H.
B	4-20-21	Traced by-E.E.A.
		Checked by ____
		Correct ____

Approved---

Chief Engineer

Earlier Issues Obsolete

Sheet N°1 of 1 Sheet

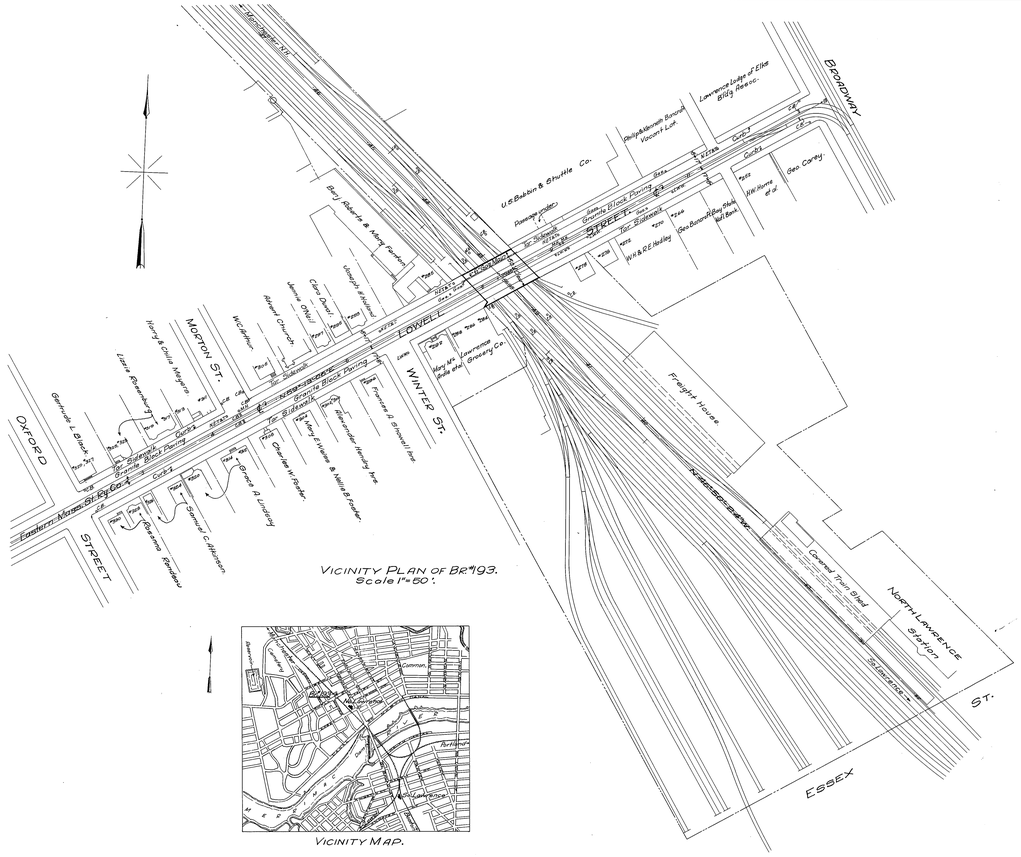

VICINITY PLAN OF BR. #193.
Scale 1" = 50'.

VICINITY MAP.

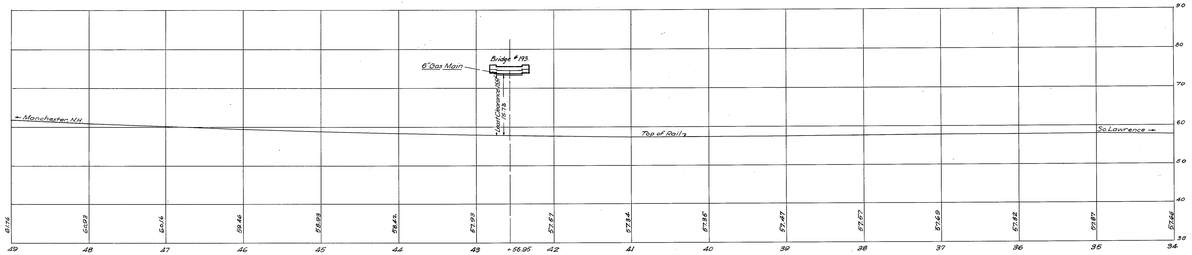

PROFILE OF MAIN TRACK
Scales: Ver. 1" = 10'. Hor. 1" = 50'.

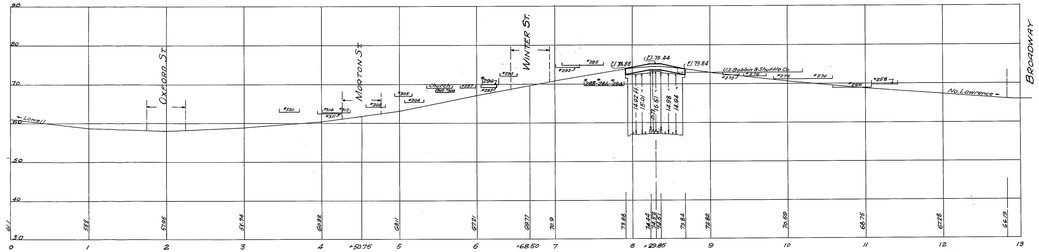

PROFILE OF LOWELL ST.
Scales: Ver. 1" = 10'. Hor. 1" = 50'.

CITY OF LAWRENCE, COUNTY OF ESSEX.

County Commissioners

BR 0.60

Cos.	Total
4	6
Feb.	Feb.
2	15

Boston and Maine Railroad
Portland Div.-Manchester & Lawrence Br.
VALUATION SECTION No. 7.4-1.
BRIDGE NO. 193
LOWELL STREET
01 MILE NORTH OF No. LAWRENCE STATION
LAWRENCE MASS.
Scales as shown.
From Office of Chief Engineer.

ISSUE	
A	11-13-21
B	7-9-21
C	7-16-25

Drawn by ____ Approved: ____
Traced by: G.S.D.
Checked by: C.C.M. Approved: [signature] Engineer of Structures.
Correct: [signature] Approved: [signature] Asst. Chief Engineer.

MASS. D.P.W. BRIDGE No. L-4-27

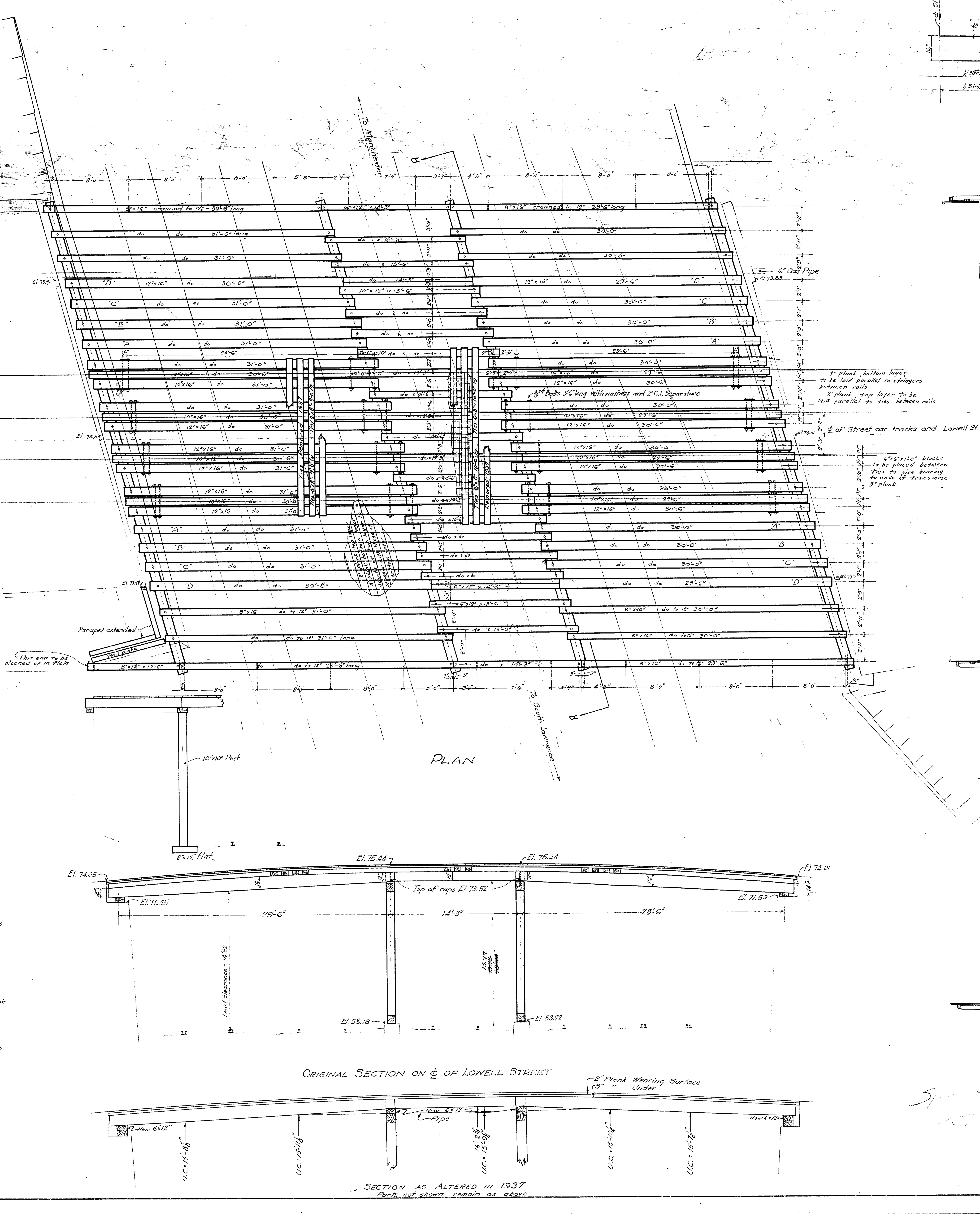

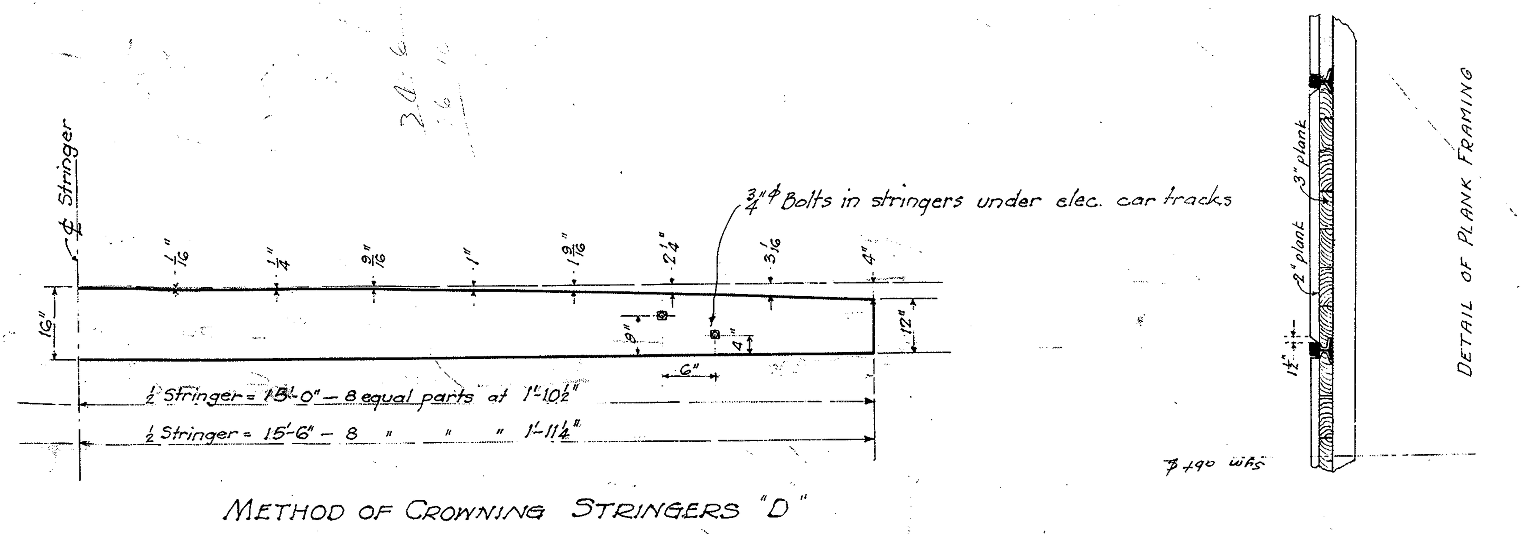

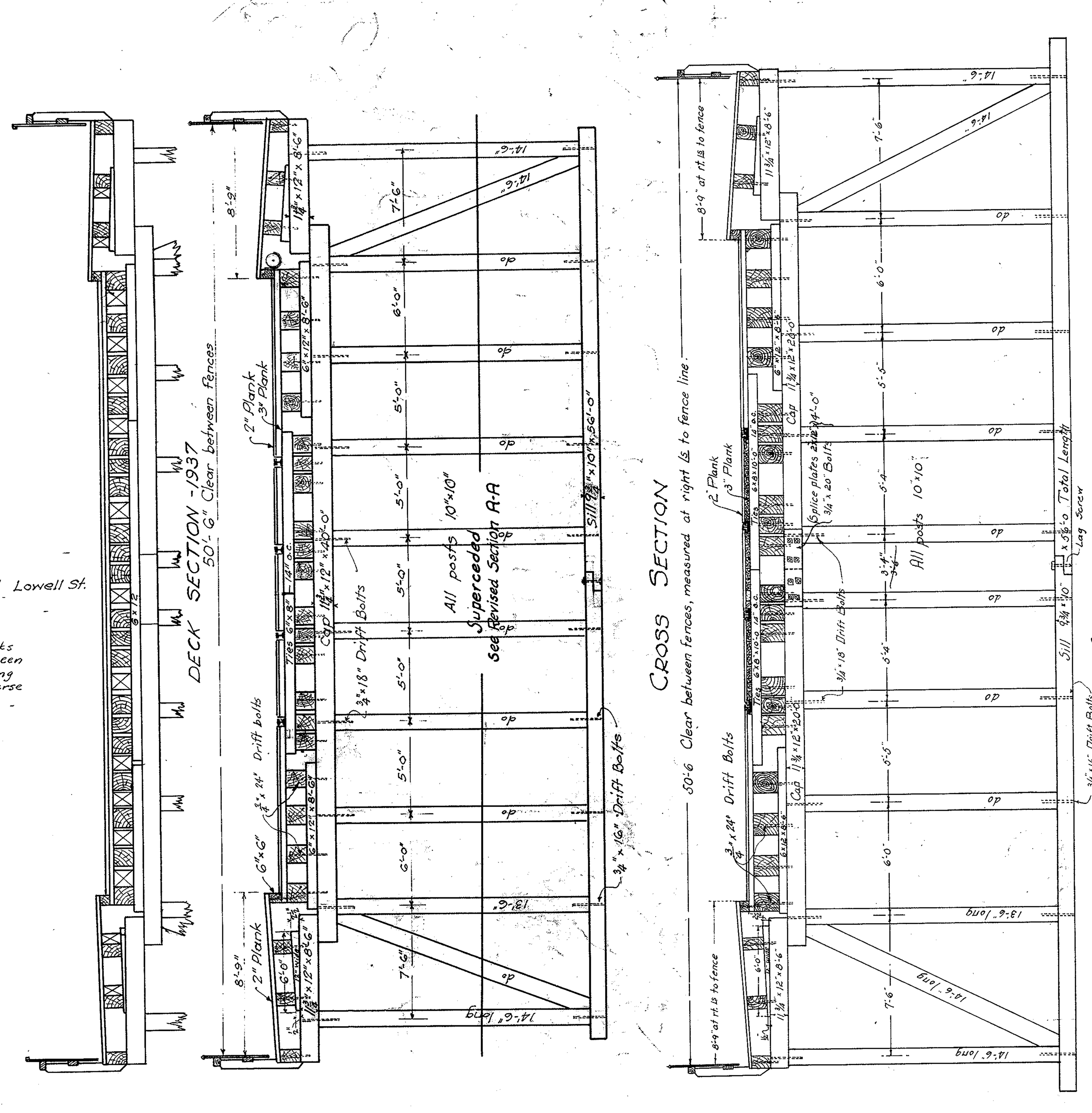

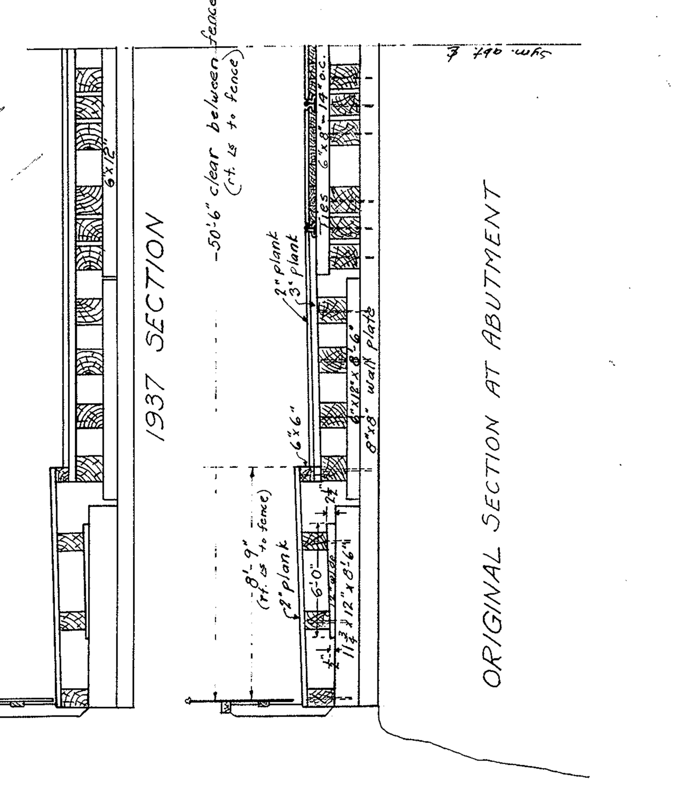

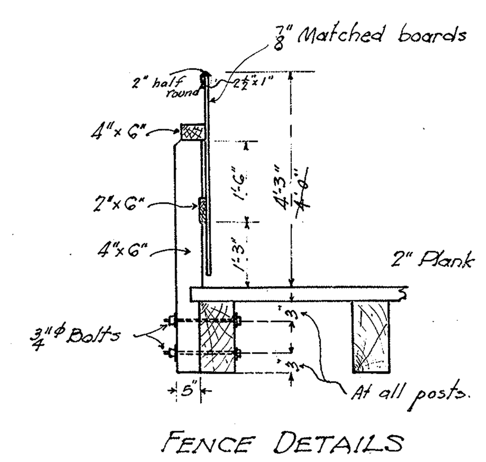

GENERAL NOTES

Old work shown by light lines
New " " " heavy "
All timber, except 2" Plank and Fence boards, to be in accordance with Boston & Maine R.R. "General Specifications for the Preservative Treatment of Piling and Bridge Timber with Creosote Oil - 1920."
All timber to be cut and bored before treatment
Fence boards, to be painted, Boston & Maine R.R. standard Nº 2 Bronze Green.
Bridge designed according to M.P.S.C. Specifications.
All bolts 3/4"ϕ
Holes for drift bolts to be 5/8"ϕ
Holes for packing bolts to be 7/8"ϕ
Planking, and all ties, caps and sills planed to a uniform thickness. Stringers in the center span planed one edge.
Wall plates and sills to be scribed to fit masonry and painted with a coat of creosote oil.
1937 - Changes: Street railway rails and ties removed. Railway stringers raised on 6"x12" blocking. Bottom layer plank in track area renewed 3" creosoted. Entire wearing surface renewed, 2" creosoted roadway, 2" Z.M.A. sidewalks

13-3
Folio 1

PLAN FOR REBUILDING

Issue B 9-17-25 Elev. of parapet at ℄ Street raised 2" Sheet #2 added.
Issue C 4-13-26 Section A-A added
Issue D Section and detail added. Dimensions changed
Issue E. Dimensions changed
Issue F Under-clearance changed.
Issue G 1937 changes.

BR. No. L-4-27

SOUND CAPACITY:
AS DESIGNED { 20 TON TRUCK / 50 " STREET CAR
1939 RATING - H17.5

Boston & Maine Railroad
Portland Div. (West) Manchester & Lawrence Branch
Valuation Section # 74-1
BRIDGE Nº 193
1/10 Mile North of North Lawrence at
LOWELL ST.

Scale 1/4" = 1'-0"
A.F.E. Nº
From Office of Chief Engineer
Boston, Mass.

ISSUE	
A	7-18-25
B	9-17-25
C	4-13-26
D	6-5-26
E	11-11-26
F	11-18-27
G	4-3-39

Drawn by
Traced " H.B.
Checked "
Correct

Approved: Engineer of Structures
Approved: Ass't Chief Engineer

Earlier Issues Obsolete
Sheet #1 of 2 Sheets

(36x48)

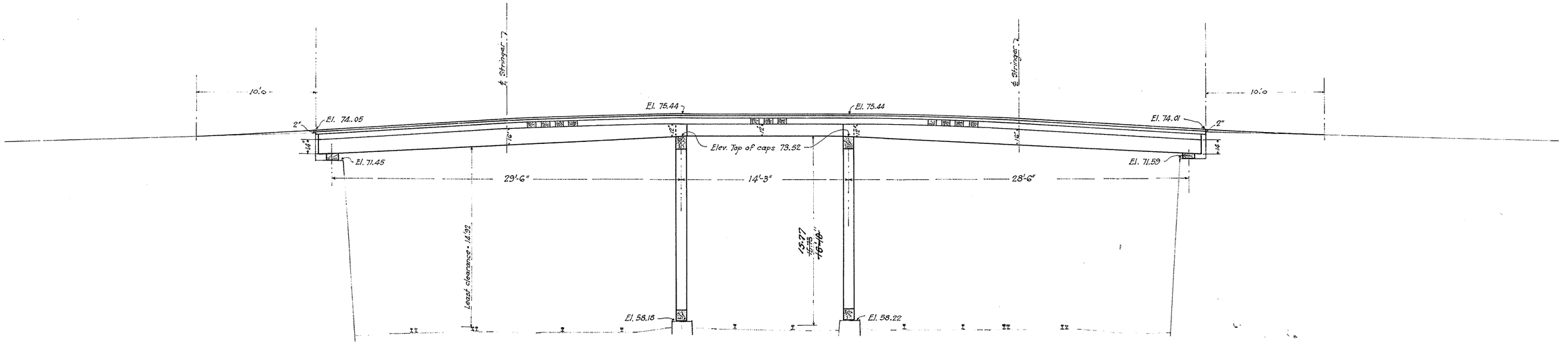

SECTION ON ℄ OF LOWELL STREET

Scale: 1/4" = 1'-0"

Ties removed and stringers raised on blocking 1937 - See revised sections on sheet 1. -

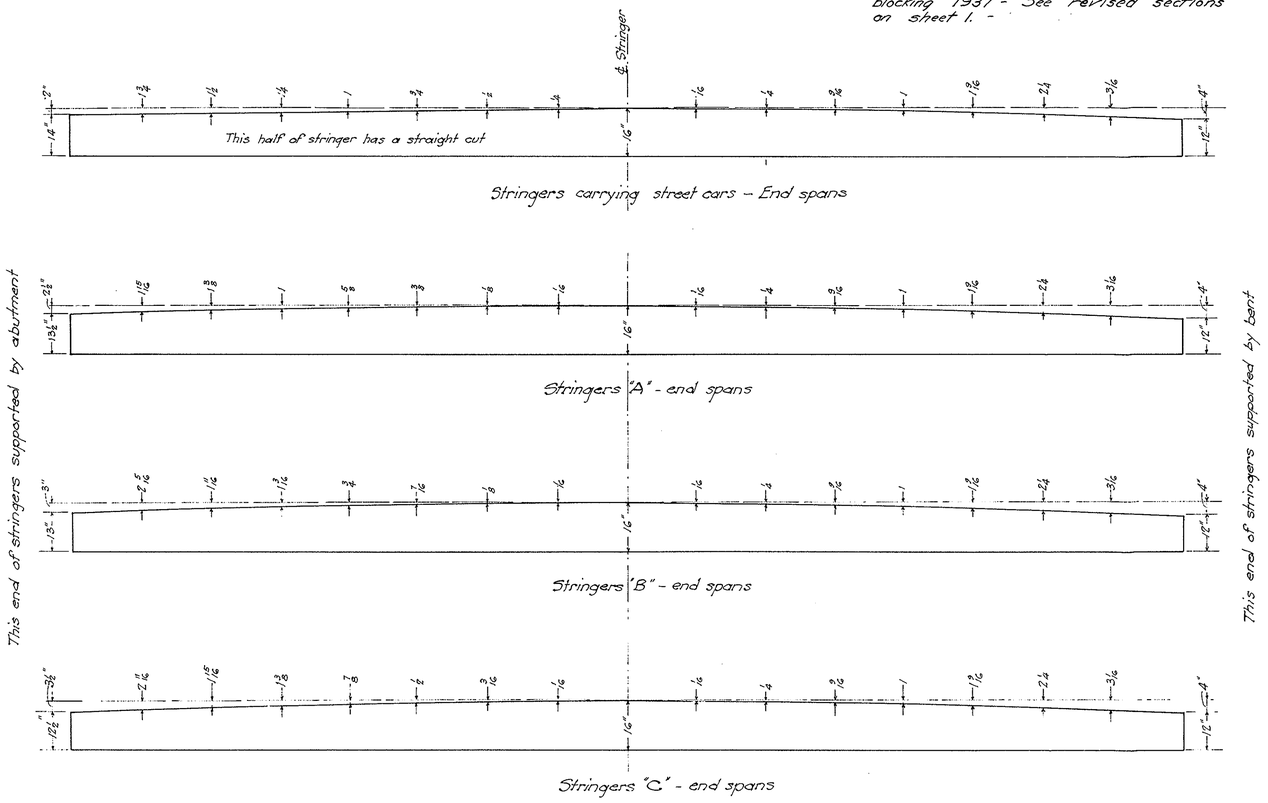

Stringers carrying street cars - End spans

Stringers "A" - end spans

Stringers "B" - end spans

Stringers "C" - end spans

Note: Each half of stringer divided into 8 equal parts and cut as shown.

GENERAL NOTES

Old work shown by light lines.
New " " " heavy ".

Date 13-3
Feb 1 Plan 35
5 2777

PLAN SHOWING FRAMING OF STRINGERS IN END SPANS

Boston & Maine Railroad
Portland Div. (West) Manchester & Lawrence Branch
Valuation Section # 74.1

BRIDGE No 193

1/10 Mile North of North Lawrence at

LOWELL ST.

Scale: 1/4" = 1'-0"
From Office of Chief Engineer

A.F.E. No
Boston, Mass.

ISSUE		
A	9-17-25	Drawn by
B	11-11-26	Traced. HB.
C	11-18-27	Checked.
D	3-27-39	Correct JJ.

Approved: ..... Engineer of Structures

Approved: ..... Assistant Chief Engineer

Earlier issues obsolete

Sheet #2 of 2 Sheets

BR. No. L-4-27

(24"×36")

Issue B
Dimension c
Issue C
Underclea
changed
Issue D
1937 Cha