HA

VOLUME 2 OF 2

COMMONWEALTH OF MASSACHUSETTS

massDOT
Massachusetts Department of Transportation
Highway Division

CONTRACT DOCUMENTS AND SPECIAL PROVISIONS

PROPOSAL NO.	608930-128034
P.V. =	$25,656,000.00
PLANS	YES

FOR

Federal Aid Project No. CMQ-003S(733)X
Lawrence Manchester Rail Corridor (LMRC) Rail Trail

in the City of

LAWRENCE

In accordance with the STANDARD SPECIFICATIONS
for HIGHWAYS and BRIDGES dated 2024

This Proposal to be opened and read: **TUESDAY, NOVEMBER 19, 2024 at 2:00 P.M.**

THIS PAGE IS INTENTIONALLY LEFT BLANK

DOCUMENT A008017

Landscape Maintenance Agreement

THIS PAGE INTENTIONALLY LEEFT BLANK

CITY OF LAWRENCE
Office of Planning & Development
360 Merrimack Street, Suite 270
Lawrence, MA 01840
Tel# 978-620-3510 www.cityoflawrence.com

Mayor
Brian A. DePeña
200 Common Street
Room 309
Lawrence, MA 01840

DANIEL MCCARTHY
Planning Director

August 12, 2024

Paul Stedman
District Highway Director
MassDOT Highway Division District 4
519 Appleton Street, Arlington, MA 02476

Re: Project File No.: 608930
Lawrence Manchester Rail Corridor (LMRC) Rail Trail
Lawrence, Massachusetts

Dear Paul Stedman:

This letter acknowledges the general expectation for care for seeding following the MassDOT contract completion for the LMRC Rail Trail. The City of Lawrence has reviewed MassDOT's Native Seeding Establishment and agrees to perform maintenance as required and as shown on the associated Maintenance Plans.

In addition to the attached plans that can be used for City DPW maintenance crew members, we are also providing the attached table summary of the planned landscape maintenance for the corridor, acknowledging that there are distinct no mow zones, annual mow zones, etc. as well as delineating the routine mow zones to encourage and promote trail use while deterring unwanted establishment of the unhoused. Through proper training and site walks with our staff, we are confident that our hands-on approach to proper upkeep will result in a familiar routine for our workers and successful implementation of our plan.

In addition to the city's internal staffing, we are fortunate to have a longstanding cooperative agreement with Groundwork Lawrence (GWL) who has partnered with us for over two decades in supporting the city's open space and park programs.

Specifically, Groundwork's Urban Forestry Program plants around 800 trees per year in public and private locations throughout the Cities of Lawrence and Methuen. Day to day management of the program is managed by two arborists certified with the International Society of Arboriculture, one of whom is also a licensed pesticide applicator in Massachusetts. During the planting season, the team hires five laborers to plant and maintain trees in the public realm. This season, Groundwork is launching internal and external dashboards to track planting and stewardship activities for both public and private trees as well as promote/quantify the overall ecological services provided by the city's tree canopy.

Many future planting beds have been identified along the rail trail corridor. The City of Lawrence is coordinating with Groundwork Lawrence on these locations. Groundwork

Lawrence is excited to provide plantings for these planting beds with separate funding sources and incorporate the rail trail into this asset management program. Over the next four years, GWL will receive $70,000 annually to support stewardship of the city's tree canopy. This along with other funding will enable GWL to increase staff time for stewardship. The goal is to expand this program to include management of invasive woody plants typically found in urban parks, to increase ecological function, and increase the public's appreciation of our open spaces.

Groundwork looks forward to partnering with the city to plant and maintain the landscape along the rail trail. This includes planting and maintenance of the proposed planting beds and managing the growth of invasives. Through Groundwork's cooperative agreement with the city, they have been able to develop strong partnerships with multiple city departments to create high quality open spaces throughout the city.

Please feel free to call me at 978-620-3505 with any questions or comments.

Sincerely,

Daniel McCarthy
Acting Planning Director/ Conservation Agent

Cc: Jorge Jaime, Acting Director of Public Works
Theo Rosario, Assistant City Engineer
Lawrence Cash P.E., MassDOT Project Manager
Tara Mitchell, MassDOT Landscape Section
Jody Trunfio P.E., Designer
Richard Williams PLA, ASLA, Designer

W/ Encl.

Lawrence Manchester Rail Corridor Rail Trail – Landscape Maintenance Program (April – October)

Mowing and Maintenance				
Code	**Description**	**Frequency**	**Equipment Needs**	**Staffing Needs**
	Seeding Turf/Lawn Mix	Mow: Bi-Weekly Weeding: Monthly	Riding Mower with 8” raised deck or Brush Hog/Bush Hog equipment	1 person
	Short Grassland Mix	Mow: Monthly Weeding: Monthly	Riding Mower with 8” raised deck or Brush Hog/Bush Hog equipment	1 person
	Low Growing Showy Upland Mix	Mow: Bi-Annual Weeding: Monthly	Riding Mower with 8” raised deck or Brush Hog/Bush Hog equipment	1 person
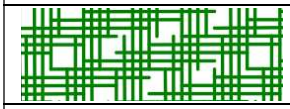	**Urban Rain Garden Mix**	Mow: Bi-Annual Weeding: Annual	Riding Mower with 8” raised deck or Brush Hog/Bush Hog equipment	1 person
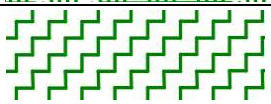	**Wetland Seed Mix**	Mow: Annual Weeding: Annual	Riding Mower with 8” raised deck or Brush Hog/Bush Hog equipment	1 person
	Routine Mow Zone along Path	Every 2 weeks From edge of path to 3’ offset (see plans)	Riding Mower with 36”- 42” deck	1 person

* The entire trail is to be inspected during time of routine weeding for the presence of invasive species. All found invasives shall be removed and chemically treated by a licensed pesticide applicator as permissible by state regulations.

6089301_HD(MAINTENANCE PLANS) PS8E.DWG Plotted on 8-Aug-2024 12:45 PM

LAWRENCE
LMRC RAIL TRAIL

STATE	FED. AID PROJ. NO.	SHEET NO.	TOTAL SHEETS
MA	-		
PROJECT FILE NO. 608930			

MAINTENANCE PLANS - 1 OF 15

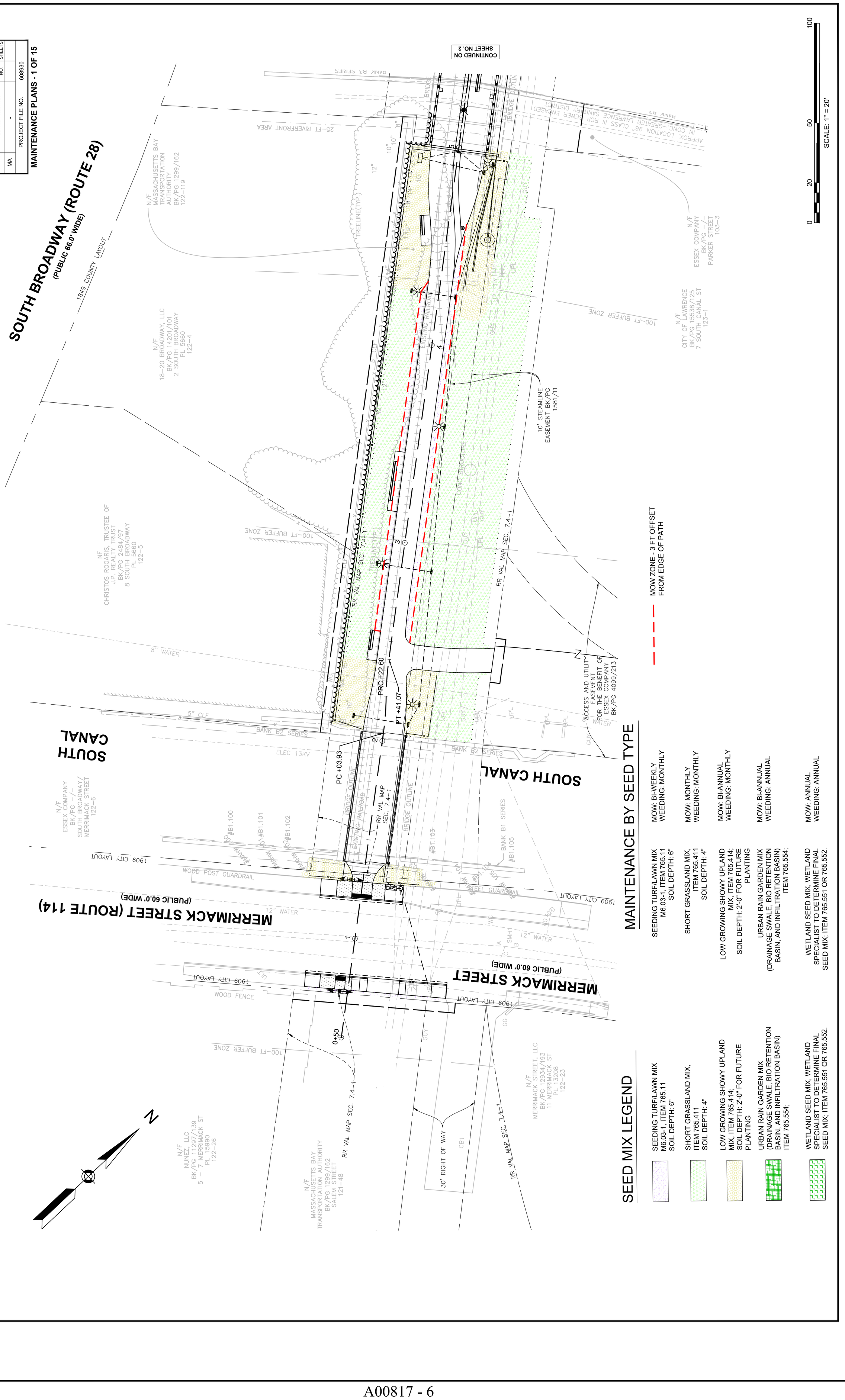

MAINTENANCE BY SEED TYPE

SEEDING TURF/LAWN MIX
M6.03-1, ITEM 765.11
SOIL DEPTH: 6"
MOW: BI-WEEKLY
WEEDING: MONTHLY

SHORT GRASSLAND MIX,
ITEM 765.411
SOIL DEPTH: 4"
MOW: MONTHLY
WEEDING: MONTHLY

LOW GROWING SHOWY UPLAND MIX, ITEM 765.414;
SOIL DEPTH: 2'-0" FOR FUTURE PLANTING
MOW: BI-ANNUAL
WEEDING: MONTHLY

URBAN RAIN GARDEN MIX
(DRAINAGE SWALE, BIO RETENTION BASIN, AND INFILTRATION BASIN)
ITEM 765.554;
MOW: BI-ANNUAL
WEEDING: ANNUAL

WETLAND SEED MIX, WETLAND SPECIALIST TO DETERMINE FINAL SEED MIX; ITEM 765.551 OR 765.552.
MOW: ANNUAL
WEEDING: ANNUAL

SEED MIX LEGEND

- SEEDING TURF/LAWN MIX M6.03-1, ITEM 765.11 SOIL DEPTH: 6"
- SHORT GRASSLAND MIX, ITEM 765.411 SOIL DEPTH: 4"
- LOW GROWING SHOWY UPLAND MIX, ITEM 765.414; SOIL DEPTH: 2'-0" FOR FUTURE PLANTING
- URBAN RAIN GARDEN MIX (DRAINAGE SWALE, BIO RETENTION BASIN, AND INFILTRATION BASIN) ITEM 765.554;
- WETLAND SEED MIX, WETLAND SPECIALIST TO DETERMINE FINAL SEED MIX; ITEM 765.551 OR 765.552.

SEED MIX LEGEND

SEEDING TURF/LAWN MIX M6.03-1, ITEM 765.11 SOIL DEPTH: 6"	SEEDING TURF/LAWN MIX M6.03-1, ITEM 765.11 SOIL DEPTH: 6"
SHORT GRASSLAND MIX, ITEM 765.411 SOIL DEPTH: 4"	SHORT GRASSLAND MIX, ITEM 765.411 SOIL DEPTH: 4"
LOW GROWING SHOWY UPLAND MIX, ITEM 765.414; SOIL DEPTH: 2'-0" FOR FUTURE PLANTING	LOW GROWING SHOWY UPLAND MIX, ITEM 765.414; SOIL DEPTH: 2'-0" FOR FUTURE PLANTING
URBAN RAIN GARDEN MIX (DRAINAGE SWALE, BIO RETENTION BASIN, AND INFILTRATION BASIN) ITEM 765.554;	URBAN RAIN GARDEN MIX (DRAINAGE SWALE, BIO RETENTION BASIN, AND INFILTRATION BASIN) ITEM 765.554;
WETLAND SEED MIX, WETLAND SPECIALIST TO DETERMINE FINAL SEED MIX; ITEM 765.551 OR 765.552.	WETLAND SEED MIX, WETLAND SPECIALIST TO DETERMINE FINAL SEED MIX; ITEM 765.551 OR 765.552.

MAINTENANCE BY SEED TYPE

MOW: BI-WEEKLY WEEDING: MONTHLY
MOW: MONTHLY WEEDING: MONTHLY
MOW: BI-ANNUAL WEEDING: MONTHLY
MOW: BI-ANNUAL WEEDING: ANNUAL
MOW: ANNUAL WEEDING: ANNUAL

MOW ZONE - 3 FT OFFSET FROM EDGE OF PATH

LAWRENCE
LMRC RAIL TRAIL

STATE	FED. AID PROJ. NO.	SHEET NO.	TOTAL SHEETS
MA	-		
PROJECT FILE NO.		608930	

MAINTENANCE PLANS - 2 OF 15

N

MERRIMACK RIVER <<<

SOUTH BROADWAY (ROUTE 28)
(PUBLIC 66.0' WIDE)

1849 COUNTY LAYOUT

RR VAL MAP SEC. 7.4-1

BRIDGE OUTLINE

EXISTING RAILROAD

10' STEAMLINE EASEMENT BK/PG 1581/11

25-FT RIVERFRONT

BANK B3 SERIES

BANK B4 SERIES

APPROX. LOCATION 96" CLASS III RCP IN CONC. GREATER LAWRENCE SANITARY DISTRICT SEWER ENCASED

GREATER LAWRENCE SANITARY DISTRICT SEWER EASEMENT BK/PG 1219/203

GREATER LAWRENCE SANITARY DISTRICT SEWER EASEMENT BK/PG 1219/303

N/F ESSEX COMPANY BK/PG -/- PARKER STREET 103-3

N/F ESSEX COMPANY BK/PG -/- ESSEX ST 124-1

N/F MASSACHUSETTS BAY TRANSPORTATION AUTHORITY BK/PG 1299/162 MERRIMACK STREET 122-19

N/F MASSACHUSETTS ELECTRIC COMPANY BK/PG 1011/438 BROADWAY 143-23

UPL #6818

UPL 8815-1

100-FT BUFFER ZONE

CONTINUED ON SHEET NO. 1

CONTINUED ON SHEET NO. 3

0 20 50 100
SCALE: 1" = 20'

608930_HD(MAINTENANCE PLANS) PS&E.DWG Plotted on 8-Aug-2024 12:46 PM

Proposal No. 608930-128034

608930_HD(MAINTENANCE PLANS) PS&E.DWG Plotted on 8-Aug-2024 12:47 PM

LAWRENCE
LMRC RAIL TRAIL

STATE	FED. AID PROJ. NO.	SHEET NO.	TOTAL SHEETS
MA	-		
PROJECT FILE NO. 608930			

MAINTENANCE PLANS - 3 OF 15

SCALE: 1" = 20'

MAINTENANCE BY SEED TYPE

SEEDING TURF/LAWN MIX M6.03-1, ITEM 765.11 SOIL DEPTH: 6"	MOW: BI-WEEKLY WEEDING: MONTHLY
SHORT GRASSLAND MIX, ITEM 765.411 SOIL DEPTH: 4"	MOW: MONTHLY WEEDING: MONTHLY
LOW GROWING SHOWY UPLAND MIX, ITEM 765.414; SOIL DEPTH: 2'-0" FOR FUTURE PLANTING	MOW: BI-ANNUAL WEEDING: MONTHLY
URBAN RAIN GARDEN MIX (DRAINAGE SWALE, BIO RETENTION BASIN, AND INFILTRATION BASIN) ITEM 765.554;	MOW: BI-ANNUAL WEEDING: ANNUAL
WETLAND SEED MIX, WETLAND SPECIALIST TO DETERMINE FINAL SEED MIX; ITEM 765.551 OR 765.552.	MOW: ANNUAL WEEDING: ANNUAL

MOW ZONE - 3 FT OFFSET FROM EDGE OF PATH

SEED MIX LEGEND

- SEEDING TURF/LAWN MIX M6.03-1, ITEM 765.11 SOIL DEPTH: 6"
- SHORT GRASSLAND MIX, ITEM 765.411 SOIL DEPTH: 4"
- LOW GROWING SHOWY UPLAND MIX, ITEM 765.414; SOIL DEPTH: 2'-0" FOR FUTURE PLANTING
- URBAN RAIN GARDEN MIX (DRAINAGE SWALE, BIO RETENTION BASIN, AND INFILTRATION BASIN) ITEM 765.554;
- WETLAND SEED MIX, WETLAND SPECIALIST TO DETERMINE FINAL SEED MIX; ITEM 765.551 OR 765.552.

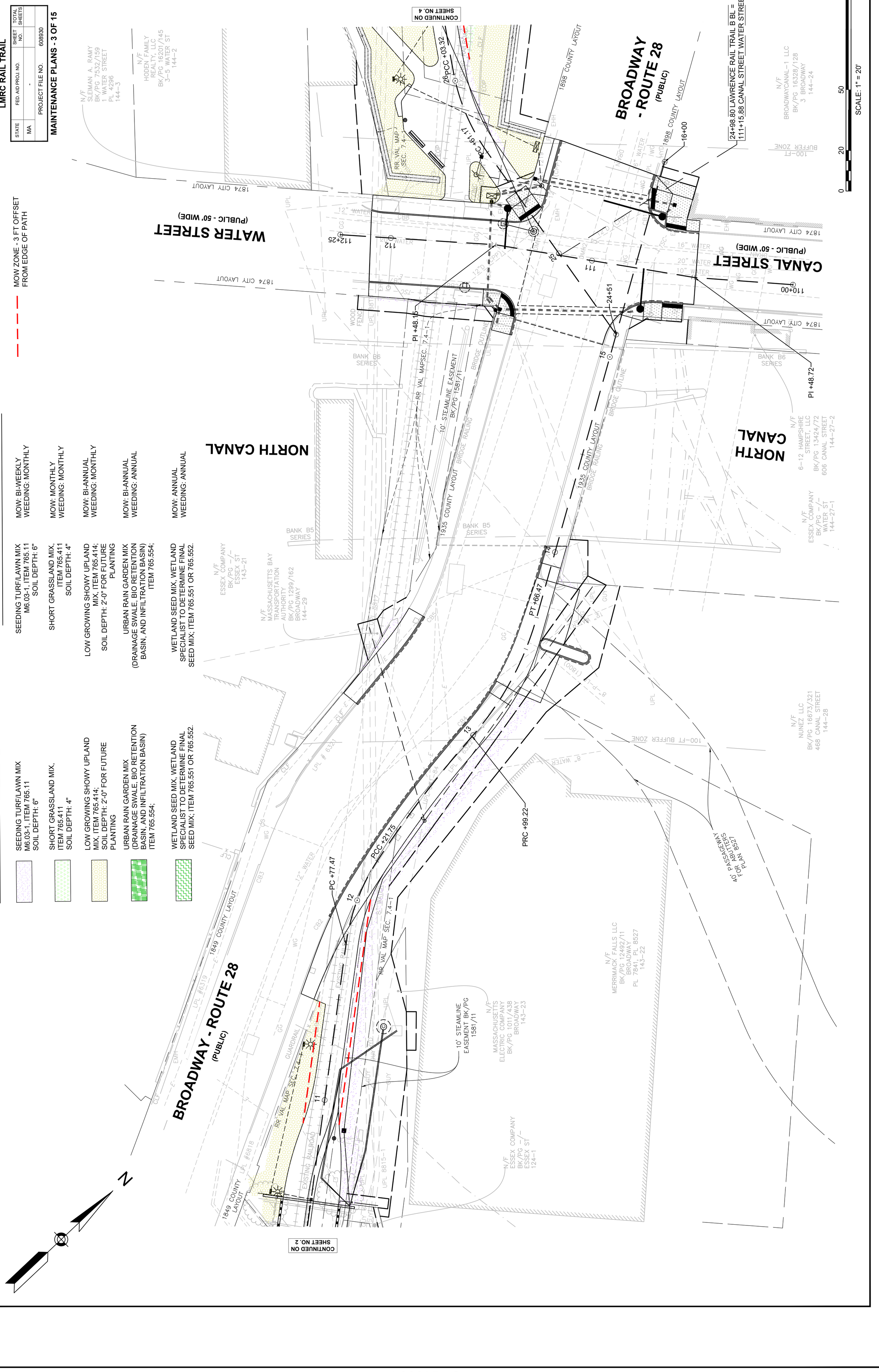

SEED MIX LEGEND

- SEEDING TURF/LAWN MIX M6.03-1, ITEM 765.11 SOIL DEPTH: 6"
- SHORT GRASSLAND MIX, ITEM 765.411 SOIL DEPTH: 4"
- LOW GROWING SHOWY UPLAND MIX, ITEM 765.414; SOIL DEPTH: 2'-0" FOR FUTURE PLANTING
- URBAN RAIN GARDEN MIX (DRAINAGE SWALE, BIO RETENTION BASIN, AND INFILTRATION BASIN) ITEM 765.554;
- WETLAND SEED MIX, WETLAND SPECIALIST TO DETERMINE FINAL SEED MIX; ITEM 765.551 OR 765.552.

MAINTENANCE BY SEED TYPE

SEEDING TURF/LAWN MIX M6.03-1, ITEM 765.11 SOIL DEPTH: 6"	MOW: BI-WEEKLY WEEDING: MONTHLY
SHORT GRASSLAND MIX, ITEM 765.411 SOIL DEPTH: 4"	MOW: MONTHLY WEEDING: MONTHLY
LOW GROWING SHOWY UPLAND MIX, ITEM 765.414; SOIL DEPTH: 2'-0" FOR FUTURE PLANTING	MOW: BI-ANNUAL WEEDING: MONTHLY
URBAN RAIN GARDEN MIX (DRAINAGE SWALE, BIO RETENTION BASIN, AND INFILTRATION BASIN) ITEM 765.554;	MOW: BI-ANNUAL WEEDING: ANNUAL
WETLAND SEED MIX, WETLAND SPECIALIST TO DETERMINE FINAL SEED MIX; ITEM 765.551 OR 765.552.	MOW: ANNUAL WEEDING: ANNUAL

MOW ZONE - 3 FT OFFSET FROM EDGE OF PATH

LAWRENCE
LMRC RAIL TRAIL

STATE	FED. AID PROJ. NO.	SHEET NO.	TOTAL SHEETS
MA	-		
PROJECT FILE NO.	608930		

MAINTENANCE PLANS - 4 OF 15

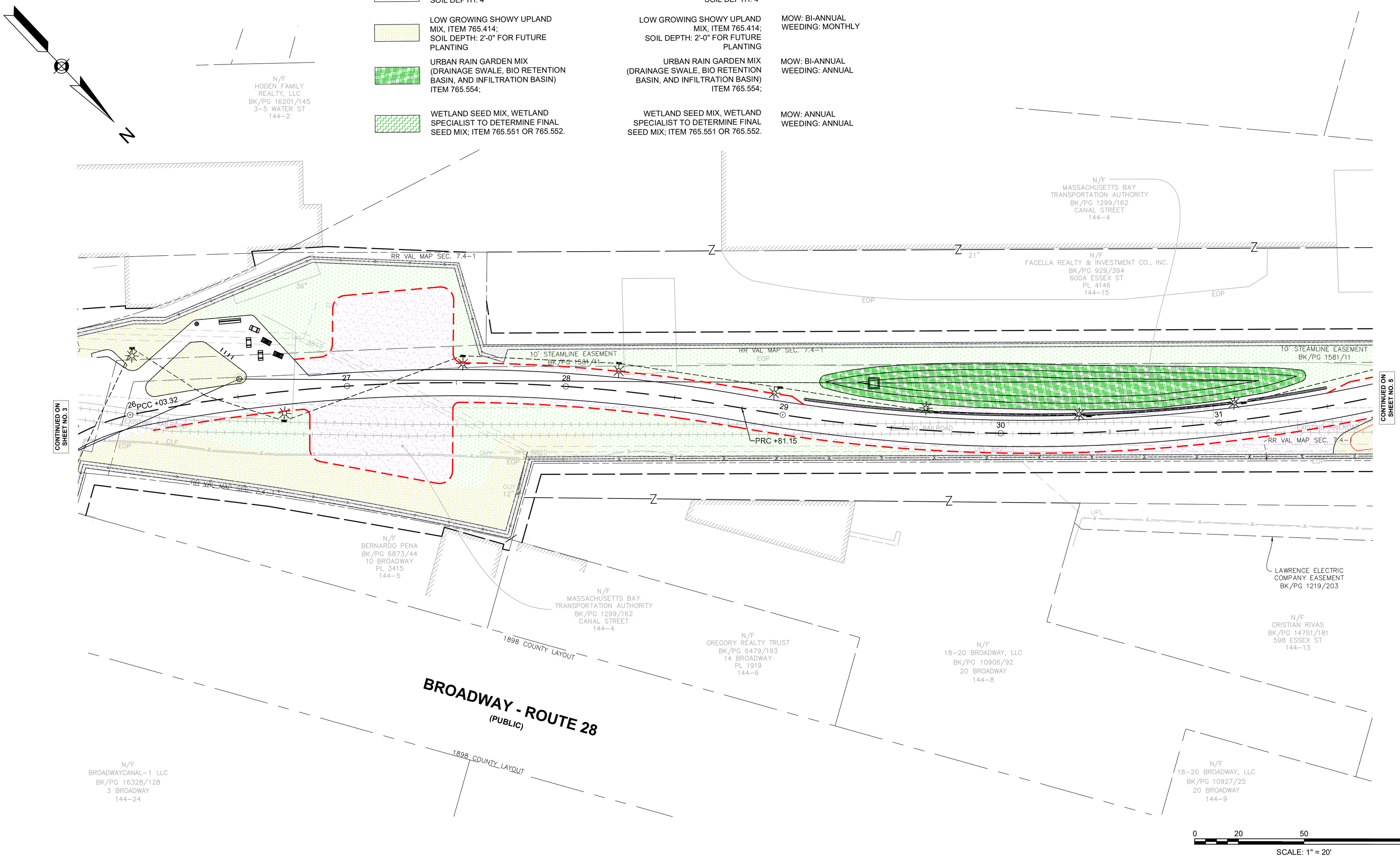

608930_HD\MAINTENANCE PLANS\ PS&E.DWG Plotted on 8-Aug-2024 12:48 PM

Proposal No. 608930-128034

A00817 - 9

608930_HD(MAINTENANCE PLANS) PS&E.DWG Plotted on 8-Aug-2024 12:49 PM

LAWRENCE
LMRC RAIL TRAIL

STATE	FED. AID PROJ. NO.	SHEET NO.	TOTAL SHEETS
MA	-		
PROJECT FILE NO. 608930			

MAINTENANCE PLANS - 5 OF 15

SEED MIX LEGEND

- SEEDING TURF/LAWN MIX M6.03-1, ITEM 765.11 SOIL DEPTH: 6"
- SHORT GRASSLAND MIX, ITEM 765.411 SOIL DEPTH: 4"
- LOW GROWING SHOWY UPLAND MIX, ITEM 765.414; SOIL DEPTH: 2'-0" FOR FUTURE PLANTING
- URBAN RAIN GARDEN MIX (DRAINAGE SWALE, BIO RETENTION BASIN, AND INFILTRATION BASIN) ITEM 765.554;
- WETLAND SEED MIX, WETLAND SPECIALIST TO DETERMINE FINAL SEED MIX; ITEM 765.551 OR 765.552.

MAINTENANCE BY SEED TYPE

- SEEDING TURF/LAWN MIX M6.03-1, ITEM 765.11 SOIL DEPTH: 6" — MOW: BI-WEEKLY WEEDING: MONTHLY
- SHORT GRASSLAND MIX, ITEM 765.411 SOIL DEPTH: 4" — MOW: MONTHLY WEEDING: MONTHLY
- LOW GROWING SHOWY UPLAND MIX, ITEM 765.414; SOIL DEPTH: 2'-0" FOR FUTURE PLANTING — MOW: BI-ANNUAL WEEDING: MONTHLY
- URBAN RAIN GARDEN MIX (DRAINAGE SWALE, BIO RETENTION BASIN, AND INFILTRATION BASIN) ITEM 765.554; — MOW: BI-ANNUAL WEEDING: ANNUAL
- WETLAND SEED MIX, WETLAND SPECIALIST TO DETERMINE FINAL SEED MIX; ITEM 765.551 OR 765.552. — MOW: ANNUAL WEEDING: ANNUAL

MOW ZONE - 3 FT OFFSET FROM EDGE OF PATH

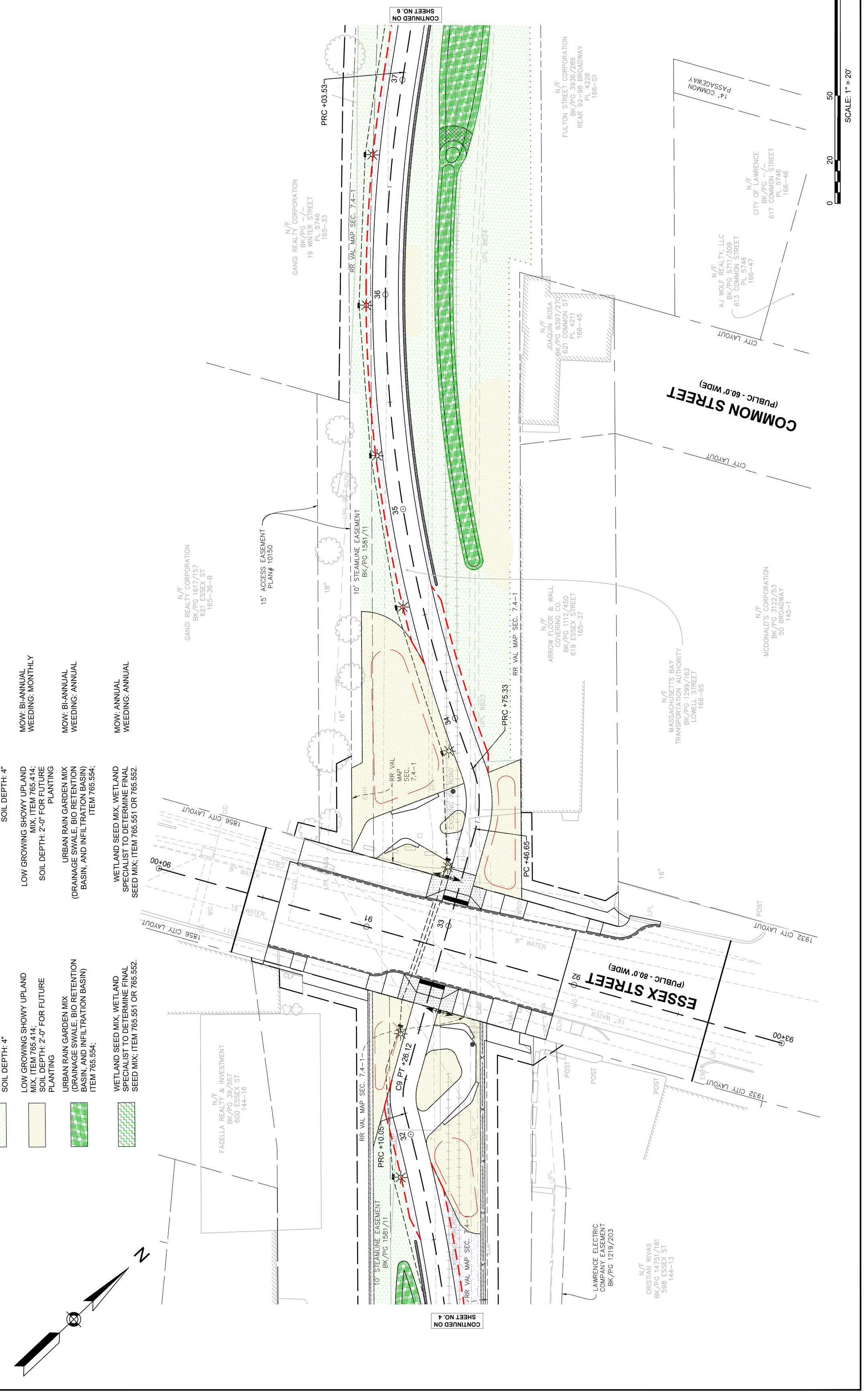

6089301_HD(MAINTENANCE PLANS) PS8E.DWG Plotted on 8-Aug-2024 12:50 PM

LAWRENCE
LMRC RAIL TRAIL

STATE	FED. AID PROJ. NO.	SHEET NO.	TOTAL SHEETS
MA	-		
PROJECT FILE NO. 608930			

MAINTENANCE PLANS - 6 OF 15

MAINTENANCE BY SEED TYPE

SEEDING TURF/LAWN MIX M6.03-1, ITEM 765.11 SOIL DEPTH: 6"	MOW: BI-WEEKLY WEEDING: MONTHLY
SHORT GRASSLAND MIX, ITEM 765.411 SOIL DEPTH: 4"	MOW: MONTHLY WEEDING: MONTHLY
LOW GROWING SHOWY UPLAND MIX, ITEM 765.414; SOIL DEPTH: 2'-0" FOR FUTURE PLANTING	MOW: BI-ANNUAL WEEDING: MONTHLY
URBAN RAIN GARDEN MIX (DRAINAGE SWALE, BIO RETENTION BASIN, AND INFILTRATION BASIN) ITEM 765.554;	MOW: BI-ANNUAL WEEDING: ANNUAL
WETLAND SEED MIX, WETLAND SPECIALIST TO DETERMINE FINAL SEED MIX; ITEM 765.551 OR 765.552.	MOW: ANNUAL WEEDING: ANNUAL

MOW ZONE - 3 FT OFFSET FROM EDGE OF PATH

SEED MIX LEGEND

SEEDING TURF/LAWN MIX M6.03-1, ITEM 765.11 SOIL DEPTH: 6"

SHORT GRASSLAND MIX, ITEM 765.411 SOIL DEPTH: 4"

LOW GROWING SHOWY UPLAND MIX, ITEM 765.414; SOIL DEPTH: 2'-0" FOR FUTURE PLANTING

URBAN RAIN GARDEN MIX (DRAINAGE SWALE, BIO RETENTION BASIN, AND INFILTRATION BASIN) ITEM 765.554;

WETLAND SEED MIX, WETLAND SPECIALIST TO DETERMINE FINAL SEED MIX; ITEM 765.551 OR 765.552.

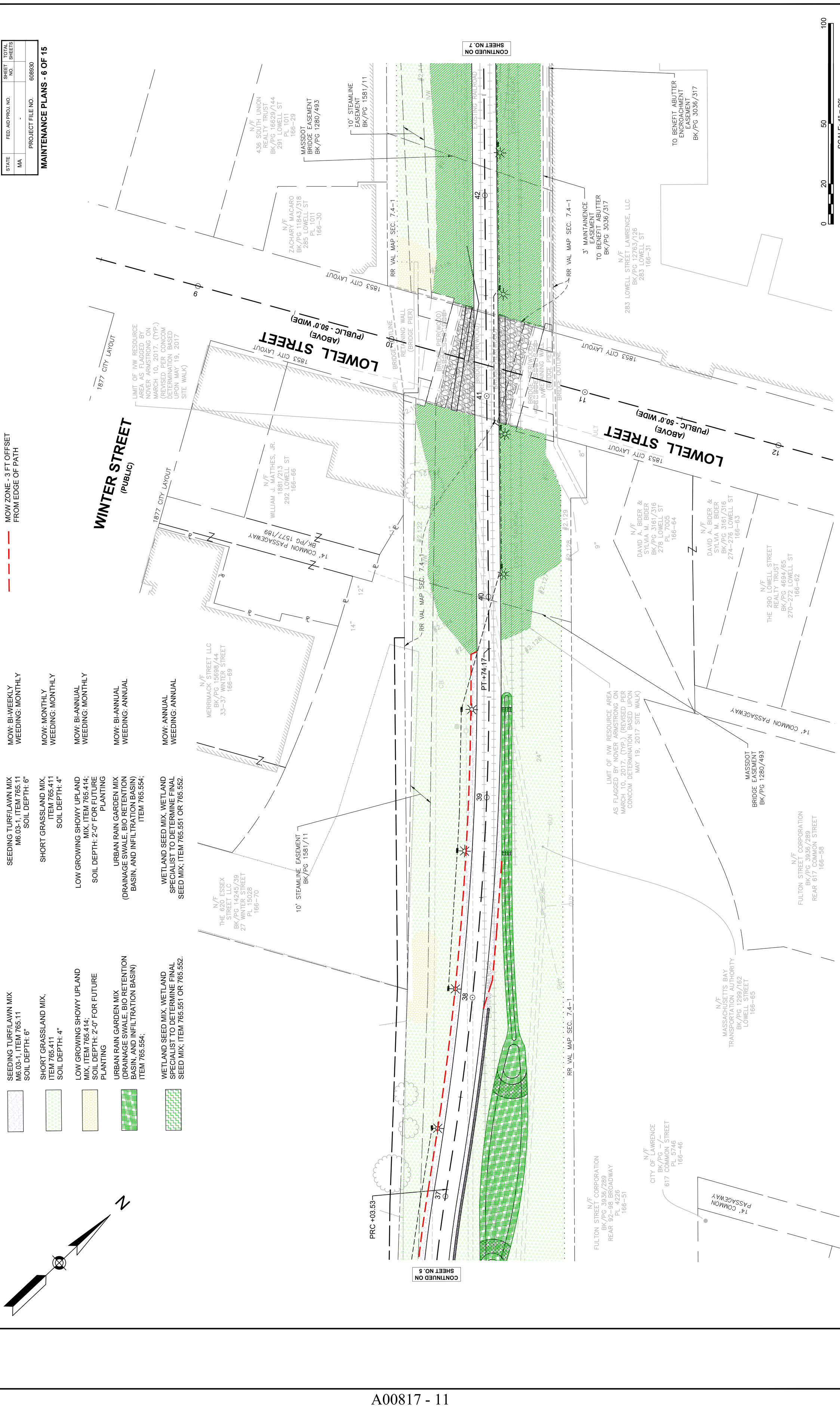
0
20
50
100
SCALE: 1" = 20'
LOWELL STREET
(PUBLIC - 50.0' WIDE)
(ABOVE)
WINTER STREET
(PUBLIC)
1853 CITY LAYOUT
1877 CITY LAYOUT
RR VAL MAP SEC. 7.4-1
PT +74.17
PRC +03.53
CONTINUED ON SHEET NO. 7
CONTINUED ON SHEET NO. 5
N/F 436 SOUTH UNION REALTY TRUST BK/PG 16629/144 291 LOWELL ST PL 1011 166-29
N/F ZACHARY MACARO BK/PG 11843/318 285 LOWELL ST PL 1011 166-30
N/F WILLIAM J. MATTHES, JR. 1881/213 292 LOWELL ST 166-66
N/F MERRIMACK STREET LLC BK/PG 15698/44 33-37 WINTER STREET 166-69
N/F THE 620 ESSEX STREET LLC BK/PG 14245/39 27 WINTER STREET PL 15028 166-70
N/F 283 LOWELL STREET LAWRENCE, LLC BK/PG 12763/126 283 LOWELL ST 166-31
N/F DAVID A. BIDER & SYLVIA M. BIDER BK/PG 3161/316 278 LOWELL ST PL 7005 166-64
N/F DAVID A. BIDER & SYLVIA M. BIDER BK/PG 3161/316 274-276 LOWELL ST 166-63
N/F THE 290 LOWELL STREET REALTY TRUST BK/PG 4694/65 270-272 LOWELL ST 166-62
N/F FULTON STREET CORPORATION BK/PG 3936/289 REAR 617 COMMON STREET 166-58
N/F MASSACHUSETTS BAY TRANSPORTATION AUTHORITY BK/PG 1299/162 LOWELL STREET 166-65
N/F FULTON STREET CORPORATION BK/PG 3936/289 REAR 92-98 BROADWAY PL 4226 166-51
N/F CITY OF LAWRENCE BK/PG -/- 617 COMMON STREET PL 5746 166-46
10' STEAMLINE EASEMENT BK/PG 1581/11
MASSDOT BRIDGE EASEMENT BK/PG 1280/493
3' MAINTAINENCE EASEMENT TO BENEFIT ABUTTER BK/PG 3036/317
TO BENEFIT ABUTTER ENCROACHMENT EASEMENT BK/PG 3036/317
14' COMMON PASSAGEWAY BK/PG 1577/189
LIMIT OF IVW RESOURCE AREA AS FLAGGED BY NOVER ARMSTRONG ON MARCH 10, 2017. (TYP.) (REVISED PER CONCOM DETERMINATION BASED UPON MAY 19, 2017 SITE WALK)
BRIDGE OUTLINE
BRIDGE RETAINING WALL (BRIDGE PIER)
EXISTING RAILROAD
IVW #2.111
#2.122
#2.129
#2.128
#2.126
#2.125
#2.124
#2.123
#2.127
#2.121
#2.120
#2.119
#2.118
#2.117
#2.116
#2.115
#2.114
#2.113
#2.112
#2.110
#2.109
#2.108
#2.107
#2.106
#2.105
#2.104
#2.103
#2.102
#2.101
#2.100
#2.99
#2.98
#2.97
#2.96
#2.95
#2.94
#2.93
#2.92
#2.91
#2.90
#2.89
#2.88
#2.87
#2.86
#2.85
#2.84
#2.83
#2.82
#2.81
#2.80
#2.79
#2.78
#2.77
#2.76
#2.75
#2.74
#2.73
#2.72
#2.71
#2.70
#2.69
#2.68
#2.67
#2.66
#2.65
#2.64
#2.63
#2.62
#2.61
#2.60
#2.59
#2.58
#2.57
#2.56
#2.55
#2.54
#2.53
#2.52
#2.51
#2.50
#2.49
#2.48
#2.47
#2.46
#2.45
#2.44
#2.43
#2.42
#2.41
#2.40
#2.39
#2.38
#2.37
#2.36
#2.35
#2.34
#2.33
#2.32
#2.31
#2.30
#2.29
#2.28
#2.27
#2.26
#2.25
#2.24
#2.23
#2.22
#2.21
#2.20
#2.19
#2.18
#2.17
#2.16
#2.15
#2.14
#2.13
#2.12
#2.11
#2.10
#2.9
#2.8
#2.7
#2.6
#2.5
#2.4
#2.3
#2.2
#2.1
#3.1
#3.2
#3.3
#3.4
#3.5
#3.6
#3.7
#3.8
#3.9
#3.10
#3.11
#3.12
#3.13
#3.14
#3.15
#3.16
#3.17
#3.18
#3.19
#3.20
#3.21
#3.22
#3.23
#3.24
#3.25
#3.26
#3.27
#3.28
#3.29
#3.30
#3.31
#3.32
#3.33
#3.34
#3.35
#3.36
#3.37
#3.38
#3.39
#3.40
#3.41
#3.42
#3.43
#3.44
#3.45
#3.46
#3.47
#3.48
#3.49

608930_HD(MAINTENANCE PLANS) PS&E.DWG Plotted on 8-Aug-2024 12:51 PM

LAWRENCE
LMRC RAIL TRAIL

STATE	FED. AID PROJ. NO.	SHEET NO.	TOTAL SHEETS
MA	-		
PROJECT FILE NO. 608930			

MAINTENANCE PLANS - 7 OF 15

SEED MIX LEGEND

- SEEDING TURF/LAWN MIX M6.03-1, ITEM 765.11 SOIL DEPTH: 6"
- SHORT GRASSLAND MIX, ITEM 765.411 SOIL DEPTH: 4"
- LOW GROWING SHOWY UPLAND MIX, ITEM 765.414; SOIL DEPTH: 2'-0" FOR FUTURE PLANTING
- URBAN RAIN GARDEN MIX (DRAINAGE SWALE, BIO RETENTION BASIN, AND INFILTRATION BASIN) ITEM 765.554;
- WETLAND SEED MIX, WETLAND SPECIALIST TO DETERMINE FINAL SEED MIX; ITEM 765.551 OR 765.552.

MOW ZONE - 3 FT OFFSET FROM EDGE OF PATH

MAINTENANCE BY SEED TYPE

- SEEDING TURF/LAWN MIX M6.03-1, ITEM 765.11 SOIL DEPTH: 6" — MOW: BI-WEEKLY WEEDING: MONTHLY
- SHORT GRASSLAND MIX, ITEM 765.411 SOIL DEPTH: 4" — MOW: MONTHLY WEEDING: MONTHLY
- LOW GROWING SHOWY UPLAND MIX, ITEM 765.414; SOIL DEPTH: 2'-0" FOR FUTURE PLANTING — MOW: BI-ANNUAL WEEDING: MONTHLY
- URBAN RAIN GARDEN MIX (DRAINAGE SWALE, BIO RETENTION BASIN, AND INFILTRATION BASIN) ITEM 765.554; — MOW: BI-ANNUAL WEEDING: ANNUAL
- WETLAND SEED MIX, WETLAND SPECIALIST TO DETERMINE FINAL SEED MIX; ITEM 765.551 OR 765.552. — MOW: ANNUAL WEEDING: ANNUAL

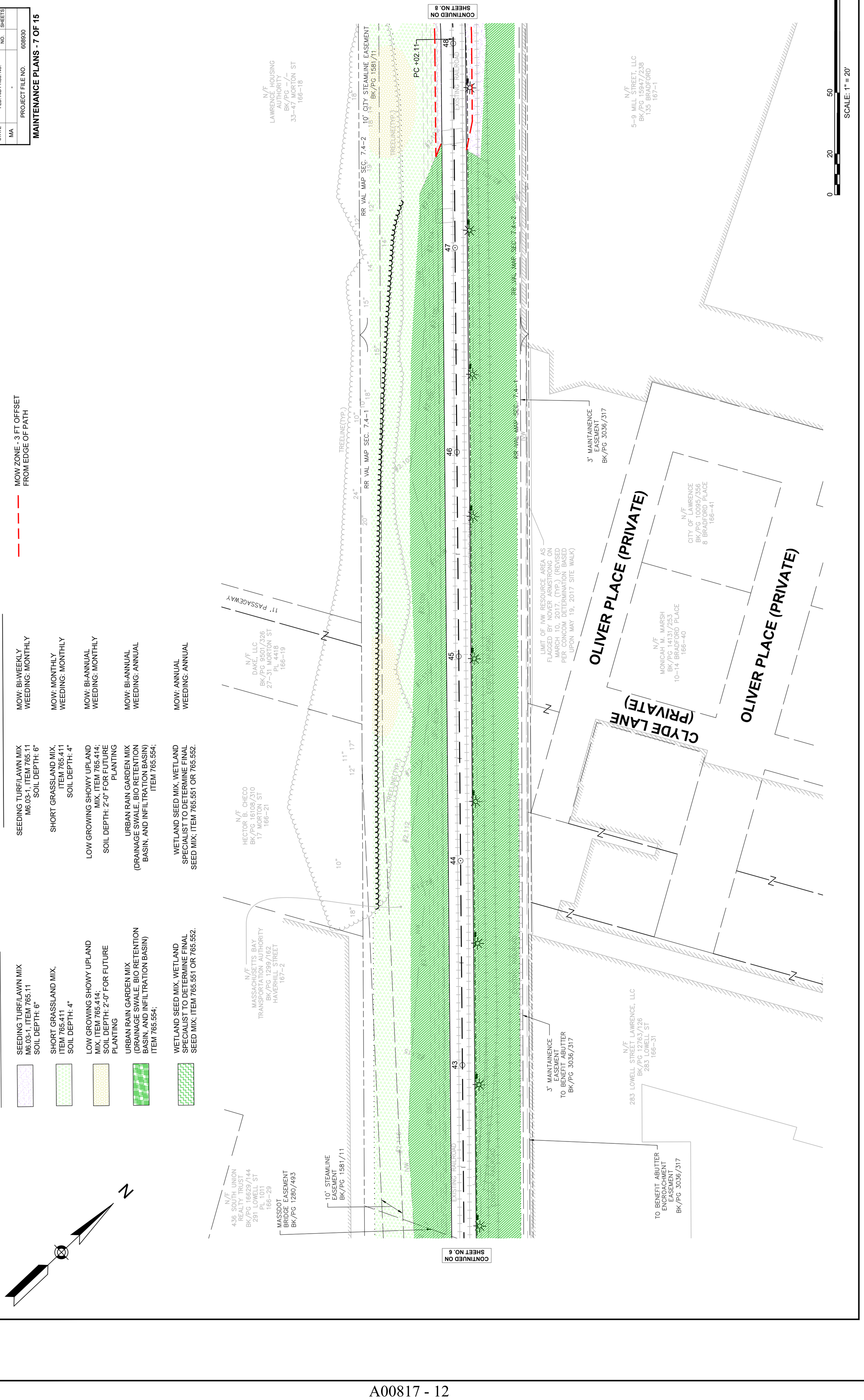
CONTINUED ON SHEET NO. 8
CONTINUED ON SHEET NO. 6
SCALE: 1" = 20'
0
20
50
100
N
PC +02.11
RR VAL MAP SEC. 7.4-2
RR VAL MAP SEC. 7.4-1
EXISTING RAILROAD
10' CITY STEAMLINE EASEMENT BK/PG 1581/11
TREELINE(TYP.)
11' PASSAGEWAY
3' MAINTAINENCE EASEMENT BK/PG 3036/317
TO BENEFIT ABUTTER ENCROACHMENT EASEMENT BK/PG 3036/317
10' STEAMLINE EASEMENT BK/PG 1581/11
MASSDOT BRIDGE EASEMENT BK/PG 1280/493
OLIVER PLACE (PRIVATE)
CLYDE LANE (PRIVATE)
N/F LAWRENCE HOUSING AUTHORITY BK/PG -/- 33-47 MORTON ST 166-18
N/F 5-9 MILL STREET, LLC BK/PG 15947/238 135 BRADFORD 167-1
N/F CITY OF LAWRENCE BK/PG 10095/356 8 BRADFORD PLACE 166-41
N/F MONICAH M. MARSH BK/PG 14131/253 10-14 BRADFORD PLACE 166-40
N/F DAKE, LLC BK/PG 9501/326 27-31 MORTON ST PL 4418 166-19
N/F HECTOR B. CHECO BK/PG 16108/310 17 MORTON ST 166-21
N/F MASSACHUSETTS BAY TRANSPORTATION AUTHORITY BK/PG 1299/162 HAVERHILL STREET 167-2
N/F 436 SOUTH UNION REALTY TRUST BK/PG 16629/144 291 LOWELL ST PL 1011 166-29
N/F 283 LOWELL STREET LAWRENCE, LLC BK/PG 12763/126 283 LOWELL ST 166-31
LIMIT OF IVW RESOURCE AREA AS FLAGGED BY NOVER ARMSTRONG ON MARCH 10, 2017. (TYP.) (REVISED PER CONCOM DETERMINATION BASED UPON MAY 19, 2017 SITE WALK)
IVW
#2.112
#2.116
#2.120
#2.122
#2.124
#2.126
#2.128
#2.130
#2.132
#2.134
#2.136
#2.138
#2.140
#2.142
#2.144
#2.146
#2.148
#2.150
#2.152
#2.154
#2.156
#2.158
#2.160
#2.162
#2.164
#2.166
#2.168
#2.170
#2.172
#2.174
#2.176
#2.178
#2.180
#2.182
#2.184
#2.186
#2.188
#2.190
#2.192
#2.194
#2.196
#2.198

608930_HD(MAINTENANCE PLANS) PS8E.DWG Plotted on 8-Aug-2024 12:52 PM

LAWRENCE
LMRC RAIL TRAIL

STATE	FED. AID PROJ. NO.	SHEET NO.	TOTAL SHEETS
MA	-		
PROJECT FILE NO. 608930			

MAINTENANCE PLANS - 8 OF 15

MOW ZONE - 3 FT OFFSET FROM EDGE OF PATH

MAINTENANCE BY SEED TYPE

SEED MIX LEGEND	
SEEDING TURF/LAWN MIX M6.03-1, ITEM 765.11 SOIL DEPTH: 6"	MOW: BI-WEEKLY WEEDING: MONTHLY
SHORT GRASSLAND MIX, ITEM 765.411 SOIL DEPTH: 4"	MOW: MONTHLY WEEDING: MONTHLY
LOW GROWING SHOWY UPLAND MIX, ITEM 765.414; SOIL DEPTH: 2'-0" FOR FUTURE PLANTING	MOW: BI-ANNUAL WEEDING: MONTHLY
URBAN RAIN GARDEN MIX (DRAINAGE SWALE, BIO RETENTION BASIN, AND INFILTRATION BASIN) ITEM 765.554;	MOW: BI-ANNUAL WEEDING: ANNUAL
WETLAND SEED MIX, WETLAND SPECIALIST TO DETERMINE FINAL SEED MIX; ITEM 765.551 OR 765.552.	MOW: ANNUAL WEEDING: ANNUAL

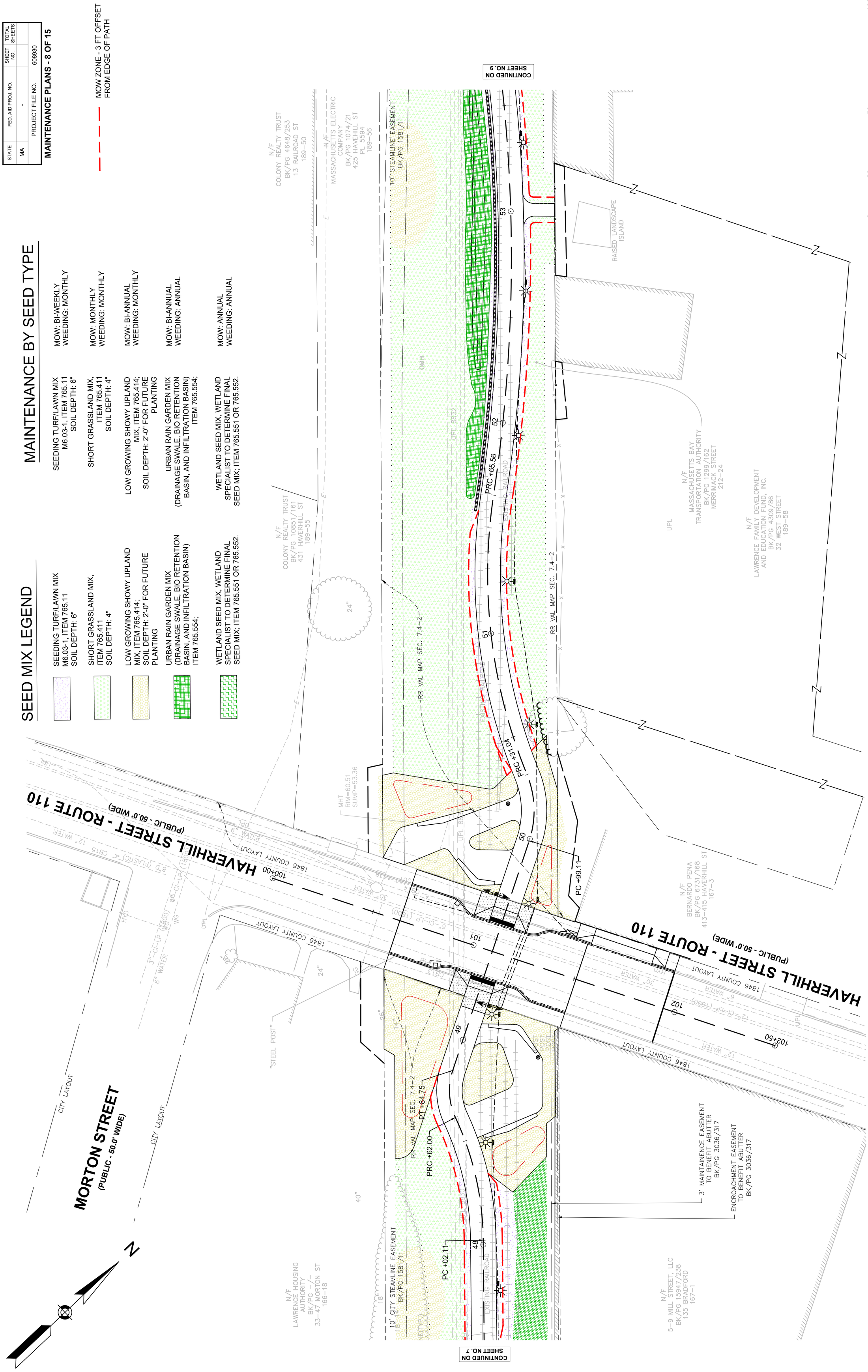

6089301_HD(MAINTENANCE PLANS) PS&E.DWG Plotted on 8-Aug-2024 12:53 PM

LAWRENCE
LMRC RAIL TRAIL

STATE	FED. AID PROJ. NO.	SHEET NO.	TOTAL SHEETS
MA	-		
PROJECT FILE NO. 608930			

MAINTENANCE PLANS - 9 OF 15

RAILROAD STREET
(PUBLIC)

CONTINUED ON SHEET NO. 10

CONTINUED ON SHEET NO. 8

MAINTENANCE BY SEED TYPE

SEEDING TURF/LAWN MIX
M6.03-1, ITEM 765.11
SOIL DEPTH: 6"
MOW: BI-WEEKLY
WEEDING: MONTHLY

SHORT GRASSLAND MIX,
ITEM 765.411
SOIL DEPTH: 4"
MOW: MONTHLY
WEEDING: MONTHLY

LOW GROWING SHOWY UPLAND
MIX, ITEM 765.414;
SOIL DEPTH: 2'-0" FOR FUTURE
PLANTING
MOW: BI-ANNUAL
WEEDING: MONTHLY

URBAN RAIN GARDEN MIX
(DRAINAGE SWALE, BIO RETENTION
BASIN, AND INFILTRATION BASIN)
ITEM 765.554;
MOW: BI-ANNUAL
WEEDING: ANNUAL

WETLAND SEED MIX, WETLAND
SPECIALIST TO DETERMINE FINAL
SEED MIX; ITEM 765.551 OR 765.552.
MOW: ANNUAL
WEEDING: ANNUAL

MOW ZONE - 3 FT OFFSET
FROM EDGE OF PATH

SEED MIX LEGEND

SEEDING TURF/LAWN MIX
M6.03-1, ITEM 765.11
SOIL DEPTH: 6"

SHORT GRASSLAND MIX,
ITEM 765.411
SOIL DEPTH: 4"

LOW GROWING SHOWY UPLAND
MIX, ITEM 765.414;
SOIL DEPTH: 2'-0" FOR FUTURE
PLANTING

URBAN RAIN GARDEN MIX
(DRAINAGE SWALE, BIO RETENTION
BASIN, AND INFILTRATION BASIN)
ITEM 765.554;

WETLAND SEED MIX, WETLAND
SPECIALIST TO DETERMINE FINAL
SEED MIX; ITEM 765.551 OR 765.552.

MOW ZONE - 3 FT OFFSET
FROM EDGE OF PATH

SCALE: 1" = 20'

6089301_HD(MAINTENANCE PLANS) PS&E.DWG Plotted on 8-Aug-2024 12:54 PM

LAWRENCE
LMRC RAIL TRAIL

STATE	FED. AID PROJ. NO.	SHEET NO.	TOTAL SHEETS
MA	-		
PROJECT FILE NO. 608930			

MAINTENANCE PLANS - 10 OF 15

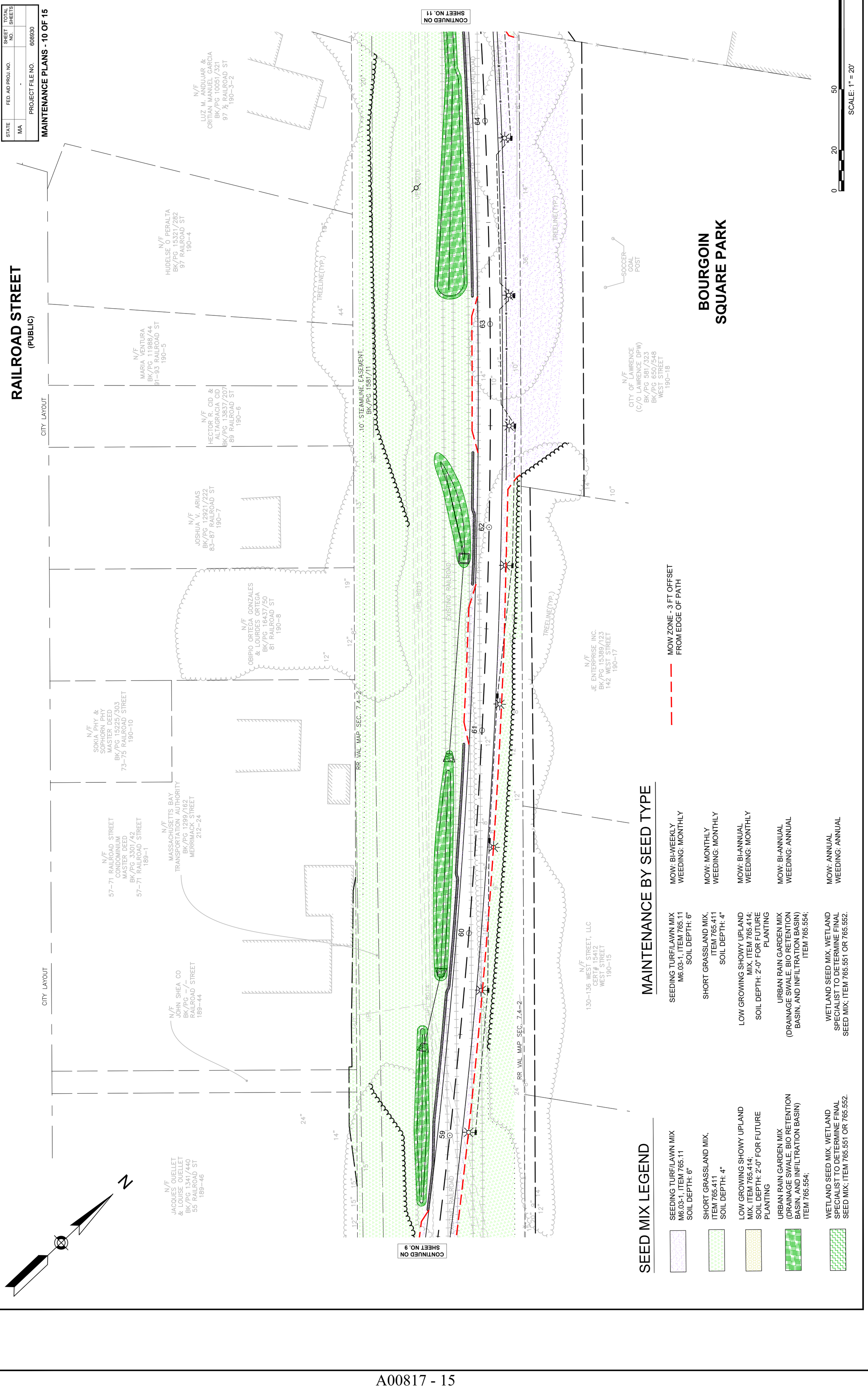

MAINTENANCE BY SEED TYPE

SEEDING TURF/LAWN MIX M6.03-1, ITEM 765.11 SOIL DEPTH: 6"	MOW: BI-WEEKLY WEEDING: MONTHLY
SHORT GRASSLAND MIX, ITEM 765.411 SOIL DEPTH: 4"	MOW: MONTHLY WEEDING: MONTHLY
LOW GROWING SHOWY UPLAND MIX, ITEM 765.414; SOIL DEPTH: 2'-0" FOR FUTURE PLANTING	MOW: BI-ANNUAL WEEDING: MONTHLY
URBAN RAIN GARDEN MIX (DRAINAGE SWALE, BIO RETENTION BASIN, AND INFILTRATION BASIN) ITEM 765.554;	MOW: BI-ANNUAL WEEDING: ANNUAL
WETLAND SEED MIX, WETLAND SPECIALIST TO DETERMINE FINAL SEED MIX; ITEM 765.551 OR 765.552.	MOW: ANNUAL WEEDING: ANNUAL

SEED MIX LEGEND

- SEEDING TURF/LAWN MIX M6.03-1, ITEM 765.11 SOIL DEPTH: 6"
- SHORT GRASSLAND MIX, ITEM 765.411 SOIL DEPTH: 4"
- LOW GROWING SHOWY UPLAND MIX, ITEM 765.414; SOIL DEPTH: 2'-0" FOR FUTURE PLANTING
- URBAN RAIN GARDEN MIX (DRAINAGE SWALE, BIO RETENTION BASIN, AND INFILTRATION BASIN) ITEM 765.554;
- WETLAND SEED MIX, WETLAND SPECIALIST TO DETERMINE FINAL SEED MIX; ITEM 765.551 OR 765.552.

6089301_HD(MAINTENANCE PLANS) PS&E.DWG Plotted on 8-Aug-2024 12:55 PM

LAWRENCE
LMRC RAIL TRAIL

STATE	FED. AID PROJ. NO.	SHEET NO.	TOTAL SHEETS
MA	-		
PROJECT FILE NO. 608930			

MAINTENANCE PLANS - 11 OF 15

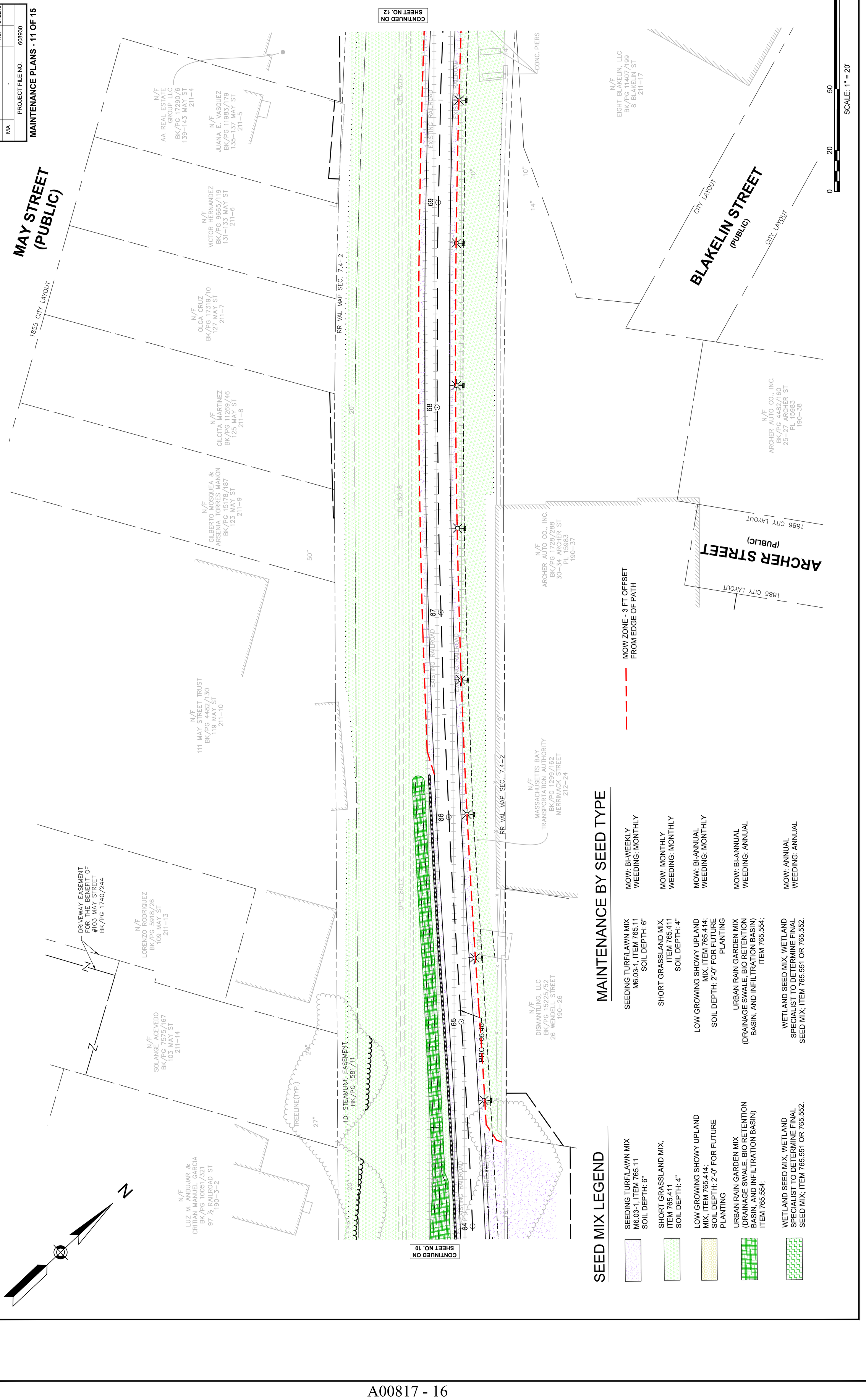

MAINTENANCE BY SEED TYPE

SEEDING	MOW / WEEDING
SEEDING TURF/LAWN MIX M6.03-1, ITEM 765.11 SOIL DEPTH: 6"	MOW: BI-WEEKLY WEEDING: MONTHLY
SHORT GRASSLAND MIX, ITEM 765.411 SOIL DEPTH: 4"	MOW: MONTHLY WEEDING: MONTHLY
LOW GROWING SHOWY UPLAND MIX, ITEM 765.414; SOIL DEPTH: 2'-0" FOR FUTURE PLANTING	MOW: BI-ANNUAL WEEDING: MONTHLY
URBAN RAIN GARDEN MIX (DRAINAGE SWALE, BIO RETENTION BASIN, AND INFILTRATION BASIN) ITEM 765.554;	MOW: BI-ANNUAL WEEDING: ANNUAL
WETLAND SEED MIX, WETLAND SPECIALIST TO DETERMINE FINAL SEED MIX; ITEM 765.551 OR 765.552.	MOW: ANNUAL WEEDING: ANNUAL

SEED MIX LEGEND

- SEEDING TURF/LAWN MIX M6.03-1, ITEM 765.11 SOIL DEPTH: 6"
- SHORT GRASSLAND MIX, ITEM 765.411 SOIL DEPTH: 4"
- LOW GROWING SHOWY UPLAND MIX, ITEM 765.414; SOIL DEPTH: 2'-0" FOR FUTURE PLANTING
- URBAN RAIN GARDEN MIX (DRAINAGE SWALE, BIO RETENTION BASIN, AND INFILTRATION BASIN) ITEM 765.554;
- WETLAND SEED MIX, WETLAND SPECIALIST TO DETERMINE FINAL SEED MIX; ITEM 765.551 OR 765.552.

608930_HD(MAINTENANCE PLANS) PS&E.DWG Plotted on 8-Aug-2024 12:57 PM

LAWRENCE
LMRC RAIL TRAIL

STATE	FED. AID PROJ. NO.	SHEET NO.	TOTAL SHEETS
MA	-		
	PROJECT FILE NO. 608930		

MAINTENANCE PLANS - 12 OF 15

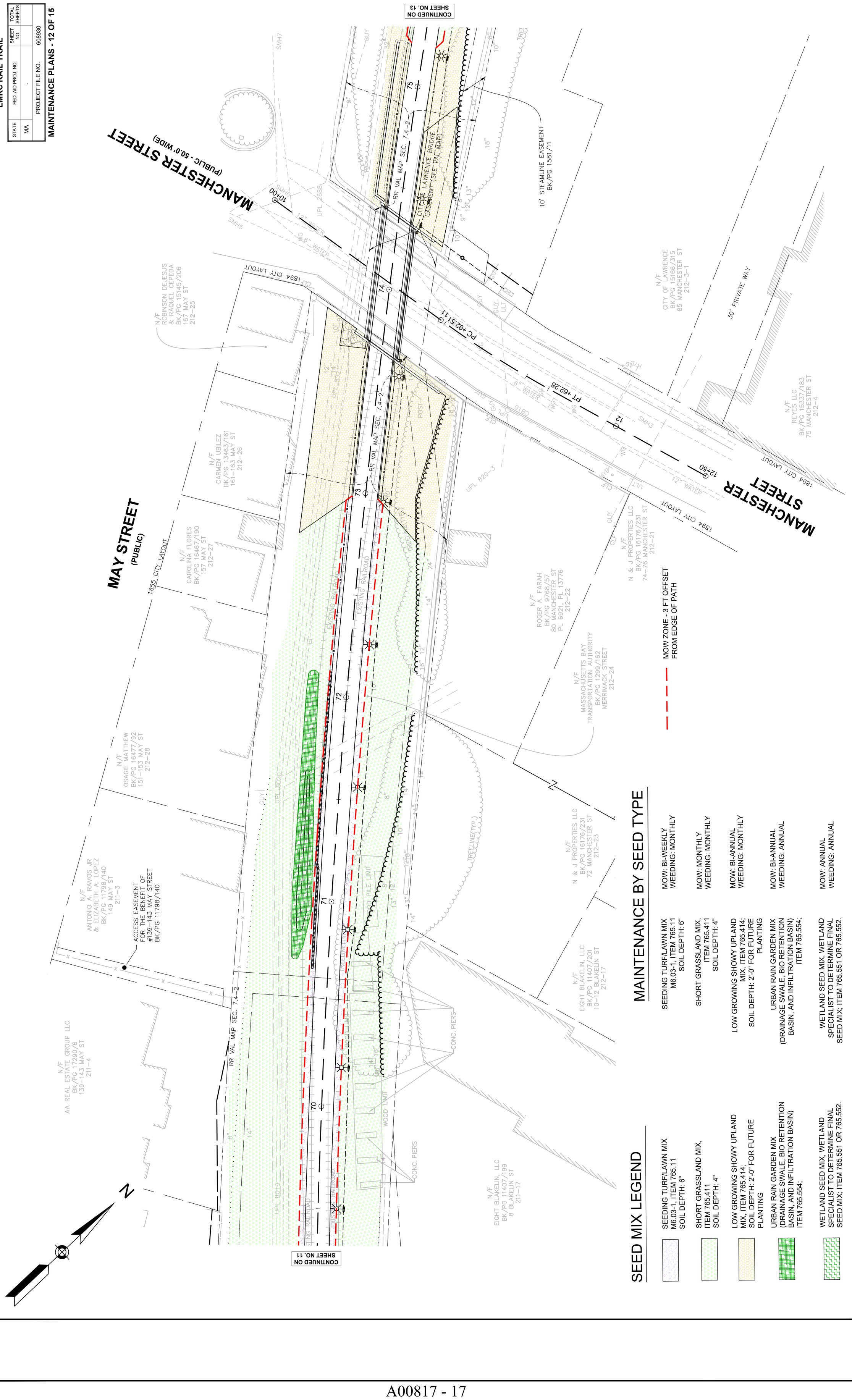

MAINTENANCE BY SEED TYPE

SEEDING TURF/LAWN MIX M6.03-1, ITEM 765.11 SOIL DEPTH: 6" — MOW: BI-WEEKLY WEEDING: MONTHLY

SHORT GRASSLAND MIX, ITEM 765.411 SOIL DEPTH: 4" — MOW: MONTHLY WEEDING: MONTHLY

LOW GROWING SHOWY UPLAND MIX, ITEM 765.414; SOIL DEPTH: 2'-0" FOR FUTURE PLANTING — MOW: BI-ANNUAL WEEDING: MONTHLY

URBAN RAIN GARDEN MIX (DRAINAGE SWALE, BIO RETENTION BASIN, AND INFILTRATION BASIN) ITEM 765.554; — MOW: BI-ANNUAL WEEDING: ANNUAL

WETLAND SEED MIX, WETLAND SPECIALIST TO DETERMINE FINAL SEED MIX; ITEM 765.551 OR 765.552. — MOW: ANNUAL WEEDING: ANNUAL

SEED MIX LEGEND

SEEDING TURF/LAWN MIX M6.03-1, ITEM 765.11 SOIL DEPTH: 6"

SHORT GRASSLAND MIX, ITEM 765.411 SOIL DEPTH: 4"

LOW GROWING SHOWY UPLAND MIX, ITEM 765.414; SOIL DEPTH: 2'-0" FOR FUTURE PLANTING

URBAN RAIN GARDEN MIX (DRAINAGE SWALE, BIO RETENTION BASIN, AND INFILTRATION BASIN) ITEM 765.554;

WETLAND SEED MIX, WETLAND SPECIALIST TO DETERMINE FINAL SEED MIX; ITEM 765.551 OR 765.552.

608930_HD(MAINTENANCE PLANS) PS&E.DWG Plotted on 8-Aug-2024 12:58 PM

LAWRENCE
LMRC RAIL TRAIL

STATE	FED. AID PROJ. NO.	SHEET NO.	TOTAL SHEETS
MA	-		
	PROJECT FILE NO. 608930		

MAINTENANCE PLANS - 13 OF 15

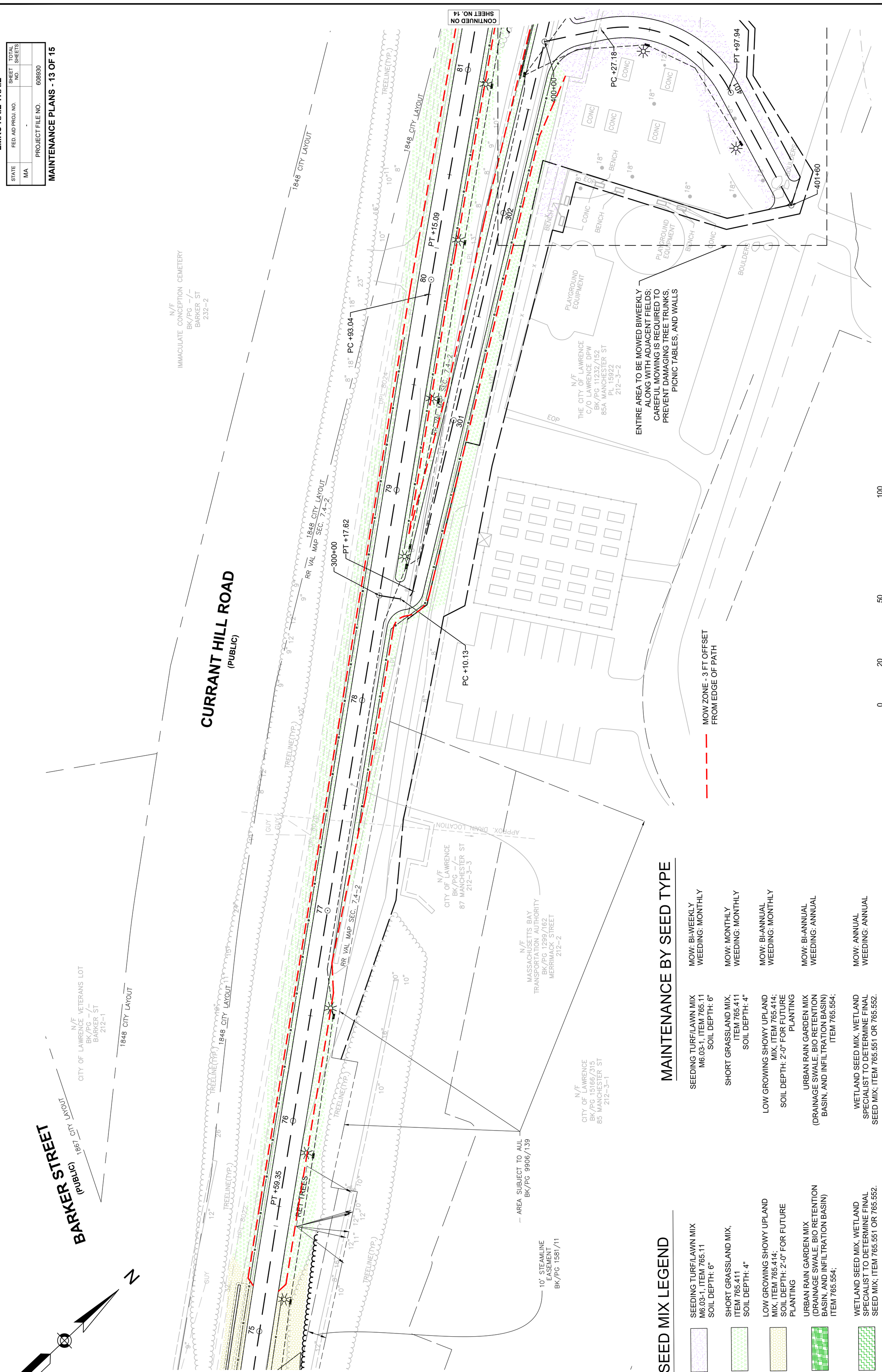

MAINTENANCE BY SEED TYPE

SEEDING TURF/LAWN MIX M6.03-1, ITEM 765.11 SOIL DEPTH: 6"	MOW: BI-WEEKLY WEEDING: MONTHLY
SHORT GRASSLAND MIX, ITEM 765.411 SOIL DEPTH: 4"	MOW: MONTHLY WEEDING: MONTHLY
LOW GROWING SHOWY UPLAND MIX, ITEM 765.414; SOIL DEPTH: 2'-0" FOR FUTURE PLANTING	MOW: BI-ANNUAL WEEDING: MONTHLY
URBAN RAIN GARDEN MIX (DRAINAGE SWALE, BIO RETENTION BASIN, AND INFILTRATION BASIN) ITEM 765.554;	MOW: BI-ANNUAL WEEDING: ANNUAL
WETLAND SEED MIX, WETLAND SPECIALIST TO DETERMINE FINAL SEED MIX; ITEM 765.551 OR 765.552.	MOW: ANNUAL WEEDING: ANNUAL

SEED MIX LEGEND

- SEEDING TURF/LAWN MIX M6.03-1, ITEM 765.11 SOIL DEPTH: 6"
- SHORT GRASSLAND MIX, ITEM 765.411 SOIL DEPTH: 4"
- LOW GROWING SHOWY UPLAND MIX, ITEM 765.414; SOIL DEPTH: 2'-0" FOR FUTURE PLANTING
- URBAN RAIN GARDEN MIX (DRAINAGE SWALE, BIO RETENTION BASIN, AND INFILTRATION BASIN) ITEM 765.554;
- WETLAND SEED MIX, WETLAND SPECIALIST TO DETERMINE FINAL SEED MIX; ITEM 765.551 OR 765.552.

608930_HD(MAINTENANCE PLANS) PS&E.DWG Plotted on 8-Aug-2024 12:59 PM

SEED MIX LEGEND

	SEEDING TURF/LAWN MIX M6.03-1, ITEM 765.11 SOIL DEPTH: 6"
	SHORT GRASSLAND MIX, ITEM 765.411 SOIL DEPTH: 4"
	LOW GROWING SHOWY UPLAND MIX, ITEM 765.414; SOIL DEPTH: 2'-0" FOR FUTURE PLANTING
	URBAN RAIN GARDEN MIX (DRAINAGE SWALE, BIO RETENTION BASIN, AND INFILTRATION BASIN) ITEM 765.554;
	WETLAND SEED MIX, WETLAND SPECIALIST TO DETERMINE FINAL SEED MIX; ITEM 765.551 OR 765.552.

MAINTENANCE BY SEED TYPE

SEEDING TURF/LAWN MIX M6.03-1, ITEM 765.11 SOIL DEPTH: 6"	MOW: BI-WEEKLY WEEDING: MONTHLY
SHORT GRASSLAND MIX, ITEM 765.411 SOIL DEPTH: 4"	MOW: MONTHLY WEEDING: MONTHLY
LOW GROWING SHOWY UPLAND MIX, ITEM 765.414; SOIL DEPTH: 2'-0" FOR FUTURE PLANTING	MOW: BI-ANNUAL WEEDING: MONTHLY
URBAN RAIN GARDEN MIX (DRAINAGE SWALE, BIO RETENTION BASIN, AND INFILTRATION BASIN) ITEM 765.554;	MOW: BI-ANNUAL WEEDING: ANNUAL
WETLAND SEED MIX, WETLAND SPECIALIST TO DETERMINE FINAL SEED MIX; ITEM 765.551 OR 765.552.	MOW: ANNUAL WEEDING: ANNUAL

MOW ZONE - 3 FT OFFSET FROM EDGE OF PATH

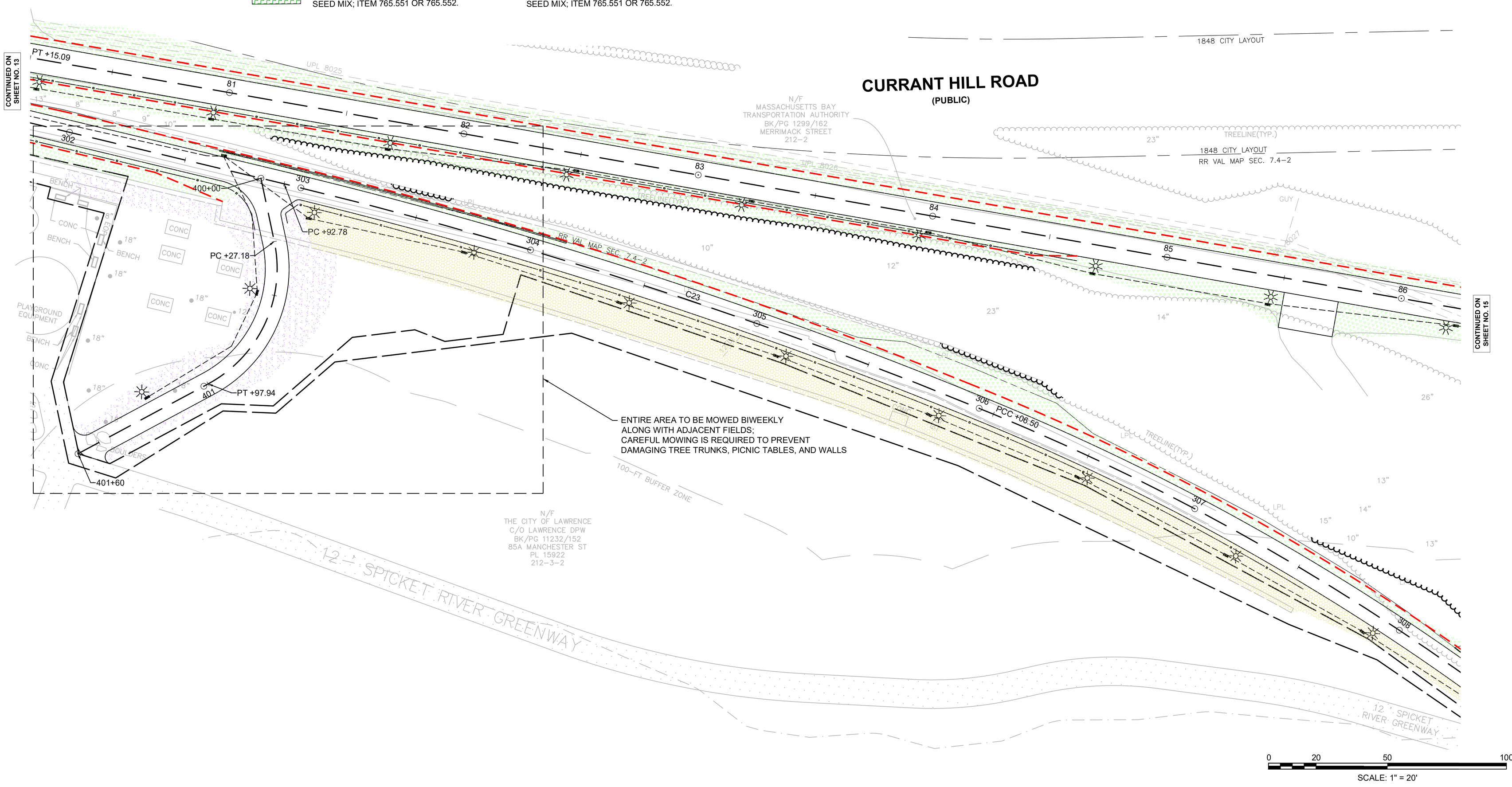

Proposal No. 608930-128034

LAWRENCE
LMRC RAIL TRAIL

STATE	FED. AID PROJ. NO.	SHEET NO.	TOTAL SHEETS
MA	-		
PROJECT FILE NO.	608930		

MAINTENANCE PLANS - 15 OF 15

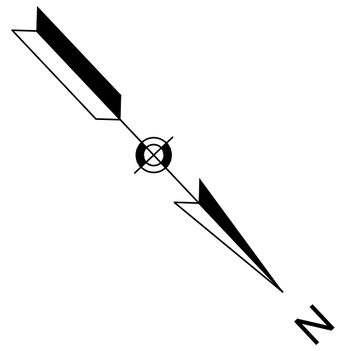

MOW ZONE - 3 FT OFFSET FROM EDGE OF PATH

SEED MIX LEGEND

- SEEDING TURF/LAWN MIX M6.03-1, ITEM 765.11 SOIL DEPTH: 6"
- SHORT GRASSLAND MIX, ITEM 765.411 SOIL DEPTH: 4"
- LOW GROWING SHOWY UPLAND MIX, ITEM 765.414; SOIL DEPTH: 2'-0" FOR FUTURE PLANTING
- URBAN RAIN GARDEN MIX (DRAINAGE SWALE, BIO RETENTION BASIN, AND INFILTRATION BASIN) ITEM 765.554;
- WETLAND SEED MIX, WETLAND SPECIALIST TO DETERMINE FINAL SEED MIX; ITEM 765.551 OR 765.552.

MAINTENANCE BY SEED TYPE

SEEDING TURF/LAWN MIX M6.03-1, ITEM 765.11 SOIL DEPTH: 6"	MOW: BI-WEEKLY WEEDING: MONTHLY
SHORT GRASSLAND MIX, ITEM 765.411 SOIL DEPTH: 4"	MOW: MONTHLY WEEDING: MONTHLY
LOW GROWING SHOWY UPLAND MIX, ITEM 765.414; SOIL DEPTH: 2'-0" FOR FUTURE PLANTING	MOW: BI-ANNUAL WEEDING: MONTHLY
URBAN RAIN GARDEN MIX (DRAINAGE SWALE, BIO RETENTION BASIN, AND INFILTRATION BASIN) ITEM 765.554;	MOW: BI-ANNUAL WEEDING: ANNUAL
WETLAND SEED MIX, WETLAND SPECIALIST TO DETERMINE FINAL SEED MIX; ITEM 765.551 OR 765.552.	MOW: ANNUAL WEEDING: ANNUAL

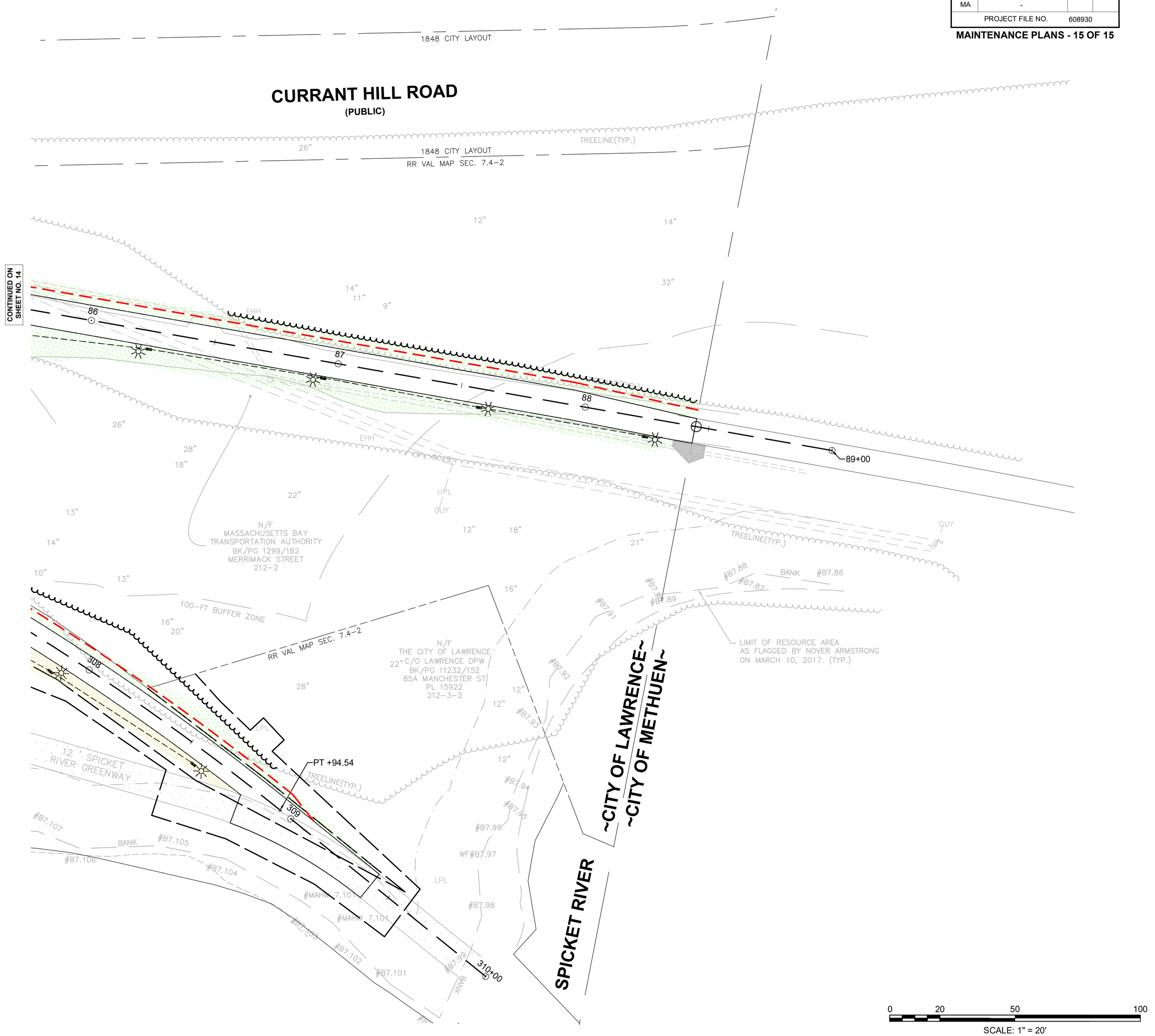

608930_HD(MAINTENANCE PLANS) PS&E.DWG Plotted on 8-Aug-2024 1:00 PM

Proposal No. 608930-128034

A00817 - 20

DOCUMENT A008018

Conditions for Proposed Activities within Transmission Line Rights-of-Way

THIS PAGE INTENTIONALLY LEEFT BLANK

Conditions for Proposed Activities within Transmission Line Rights-of-Way

Table of Contents

1. Scope 3
2. Compliance/Safety 3
3. Protection of Transmission Line Facilities 4
4. Access to Right-of-way 4
5. Preservation of Rights and Future Use 5
6. Protection of Interests 5
7. Deliverables 6
8. Appendices 6

Appendix A 7
Appendix B 8
Revision History 9

1. Scope

1.1. This document presents minimum conditions for work within National Grid electric transmission line rights-of-way, whether owned in fee or by easement. Activities that are not fully in conformance with this document may sometimes be allowed provided they are specifically shown on plans or described in specifications or other documents that have been reviewed and accepted by National Grid.

1.2. "Requestor" as used in this document refers to any person, organization, corporation or other entity requesting permission to conduct activities within a transmission line right-of-way or anyone acting on the Requestor's behalf.

2. Compliance/Safety

2.1. All activities conducted by the Requestor shall comply with all applicable Federal, state, and local laws, statutes, rules, regulations, and codes. In particular, the requirements of the following statutes, regulations, and safety codes and guidelines, appropriate for the voltage(s) of the transmission line(s) within the right-of-way, must be met:

2.1.1. National Electrical Safety Code

2.1.2. In Massachusetts:

2.1.2.1. 220 CMR 125.00, "Installation and Maintenance of Electric Transmission Lines,"

2.1.2.2. MGL Chapter 166 Section 21A "Coming into Close Proximity to High Voltage Lines" except that the required clearance of six feet is insufficient. The minimum clearance allowed by OSHA shall be maintained.

2.1.3. In New York, Part 57 of the New York State Industrial Codes Rules (also known as the "High-Voltage Proximity Act") (http://www.labor.ny.gov/workerprotection/safetyhealth/sh57.shtm)

2.1.4. All OSHA regulations governing working clearances to electric distribution and transmission lines shall be followed. Although regulations 29 CFR 1926 Subpart CC and 29 CFR 1926.1501 may be specific to equipment that can hoist, lower, and horizontally move a suspended load, all equipment operating within a right-of-way shall maintain the clearances specified in these regulations, including but not limited to cranes, backhoes, excavators, forklifts, pile drivers, and drill-rigs.

2.1.4.1. In accordance with 1926.1408, if the Requestor asks to encroach upon the 20 foot clearance requirement and requests voltages of electric lines near the proposed work or activity, the Requestor shall provide an aerial photograph or detailed survey plan delineating the area of work or activity in proximity to electric lines and structures. Requests may be emailed to TransmissionEngineering@NationalGrid.com or mailed to National Grid c/o Transmission Engineering, 40 Sylvan Road, Waltham, MA 02451.

2.2. The Requestor shall not place or store any items within the right-of-way including, but not limited to vehicles, construction materials, equipment, or debris, excavated soil, trailers, or storage containers.

2.3. The Requestor shall not unload or load vehicles or equipment within the right-of-way.

2.4. The Requestor shall adequately ground vehicles, equipment, fences and gates, at all times and in accordance with applicable Federal, state, and local laws, statutes, rules, regulations, and design codes, including, but not limited to, those listed in paragraph A above and IEEE Standard 80.

3. Protection of Transmission Line Facilities

3.1. The Requestor shall, at all times, protect transmission line facilities from damage. In addition to compliance with safety codes as described in Section 2, protection of transmission facilities shall, as a minimum, include the following:

3.1.1. The Requestor shall operate equipment and vehicles at least 50 feet horizontally away from any transmission line pole, tower, guy wire, or guy anchor.

3.1.2. When making a rough cut during excavation, the Requestor shall disturb no earth within an area bounded by a line drawn 25 feet plus 2.5 times the depth of the cut from the nearest transmission line pole, tower leg, guy wire, or guy anchor, but not less than 50 feet. Upon completion of the rough cut, the slopes of the bank shall be graded on a slope no steeper than one vertical to five horizontal and stabilized with vegetation or rip-rap. The top of the slope shall be at least 50 feet from the nearest pole, tower leg, guy wire, or guy anchor. In cases where these criteria cannot be met, the Requestor may, at the discretion of Transmission Engineering, need to engage a qualified Professional Engineer familiar with Transmission work and perform a stability analysis proving stability of both the proposed excavation and the transmission structure and/or guy anchor.

3.1.3. The Requestor shall not store or use explosives within the right-of-way.

3.1.4. The Requestor shall locate all ground wires buried in areas to be excavated and shall protect them against damage. If a buried ground wire is broken, the Requestor shall prevent anyone from touching it and shall notify National Grid.

4. Access to Right-of-way

4.1. The Requestor shall not at any time block or impede access to or along the right-of-way.

4.2. The Requestor shall not damage roads or trails used to gain access to or along the right-of-way.

4.3. All underground utilities, pipes, conduits, and all proposed bituminous and/or concrete drive surfaces and underground utilities shall be designed to minimally withstand AASHTO *Standard Specifications for Bridges and Highways* HS-25 highway class design criteria for vehicular loading when located within the utility corridor unless otherwise accepted by Transmission Engineering. Certain crossing locations at the

discretion of National Grid shall be designed to withstand 100,000 lbs (loaded concrete truck). Details and designs shall be certified by a qualified Professional Engineer.

5. Preservation of Rights and Future Use

5.1. National Grid retains all rights granted in the original right-of-way deed. Specifically, National Grid reserves the right to place future structures or relocate existing structures anywhere within the right-of-way, and reserve the right to control any vegetation within the right-of-way.

5.2. The Requestor shall place no above or below ground structures within the right-of-way, including streetlights, signs, sheds, fences, septic systems, retention or detention ponds or basins, and swimming pools.

5.3. Improvements shall not continuously occupy more than 100 feet along any line drawn longitudinally along the right-of-way.

5.4. Improvements shall not occupy future locations of transmission structures. This includes the bisector of angles in the right-of-way and generally includes areas adjacent to existing structures.

6. Protection of Interests

6.1. National Grid shall not be held liable for any damage to the Requestor's activities within the right-of-way when such damage is the result of construction, maintenance, or operation or other use of existing or future transmission line facilities.

6.1.1. For any proposed underground pipe or conduit the Requestor shall provide warning tape in the trench for all and tracer cable for non-metallic pipes or conduits when located within a transmission corridor. Plans provided for review shall identify such warning tape and tracer cable.

6.1.2. All new utilities, pipes, and conduits shall have field markers installed above the asset and shall be located not to impede access or in the way of future development.

6.1.3. Requestor may submit their company standard cut-sheet detailing their marker's dimensions and composition, otherwise use Rhino Tri-View Post Markers with appropriate labelling suitable to the project.

6.2. The Requestor shall pay all costs associated with modifications or repairs made necessary to National Grid's facilities as a result of activities by the Requestor, including the cost of repairs or modifications to buried ground wires. Repairs and/or modifications shall be performed by National Grid. The Requestor shall notify National Grid's Manager of Transmission Line Services when a buried wire is damaged.

6.3. The Requestor shall notify National Grid in writing at least 24 hours before the start of the work. In New York the notification shall also be made in accordance with the requirements of the High Voltage Proximity Act (Section 57.7).

6.4. Electrostatic currents may occur in proximity to electric transmission lines under certain circumstances. Although people may experience annoying shocks due to these

currents when touching conductive objects, National Grid is not able to eliminate the currents. The steady-state current due to these electrostatic effects is within the limits established by the National Electrical Safety Code.

7. Deliverables

7.1. Full-sized paper copies of plans prepared to an appropriate scale shall be provided by the Requestor. Plans shall be certified by an appropriate professional licensed in the state in which the project is located. Digital signatures of a licensed professional will not be accepted. If plans are acceptable and an agreement can be achieved, the Requestor shall provide final plans in both paper and pdf versions.

7.2. Upon completion of any development located within a transmission corridor, Requestor shall provide upon request by Transmission Engineering, a certified As-Built Plan. Plan shall be certified by a qualified licensed professional.

8. Appendices

8.1. Appendix A is shown as a guideline describing a method of determining elevations of energized conductors.

8.2. Appendix B is shown as a template displaying elements needed to review conductor clearances. In most cases, this data will be required to be certified by a licensed Land Surveyor.

Appendix A

Procedure for Determining Wire Heights

- Elevations of conductors (wires) should be taken* at the point of attachments at bottom insulator on transmission structure.
- Elevations should be taken* at mid-span and quarter-span.
- Elevations should be taken* at any obvious low points (other than mid-point) which may occur due to grade changes below.
- Elevations should be taken directly above any proposed improvements or areas of proposed activity(s) as applicable.
- Existing grade elevations corresponding to aerial shots cited above should also be recorded. Any proposed finish grades different from existing grades, should also be recorded.
- As measurements are recorded, the following information must be recorded: date, time, ambient air temperature, wind direction and velocity, and weather conditions (e.g.: sunny, rain, snow, etc).

* WARNING: Conductors are electrically energized and are to be considered dangerous to approach. All measurements to conductors shall be made by remote measurement techniques which shall in no case cause measuring devices or personnel to come within safety parameters established by OSHA 1926.550 or New York State's High Voltage Proximity Act.

c = clearance from grade

H = measured horizontal offset distance (perpendicular to conductor at point of crossing)

χ = measured vertical distance from horizontal axis of instrument eye piece to grade at a point

ϕ = measured vertical angle from horizontal axis of instrument eye piece to conductor

y = calculated vertical distance from horizontal axis to conductor

$y = \tan \phi \, (H)$

$c = \chi + y$

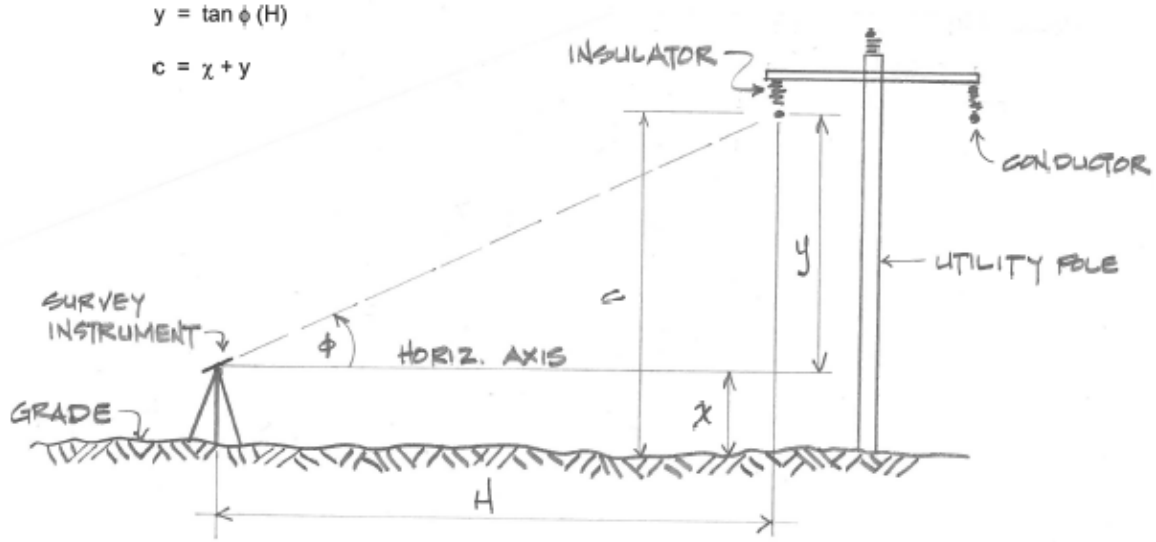

Appendix B

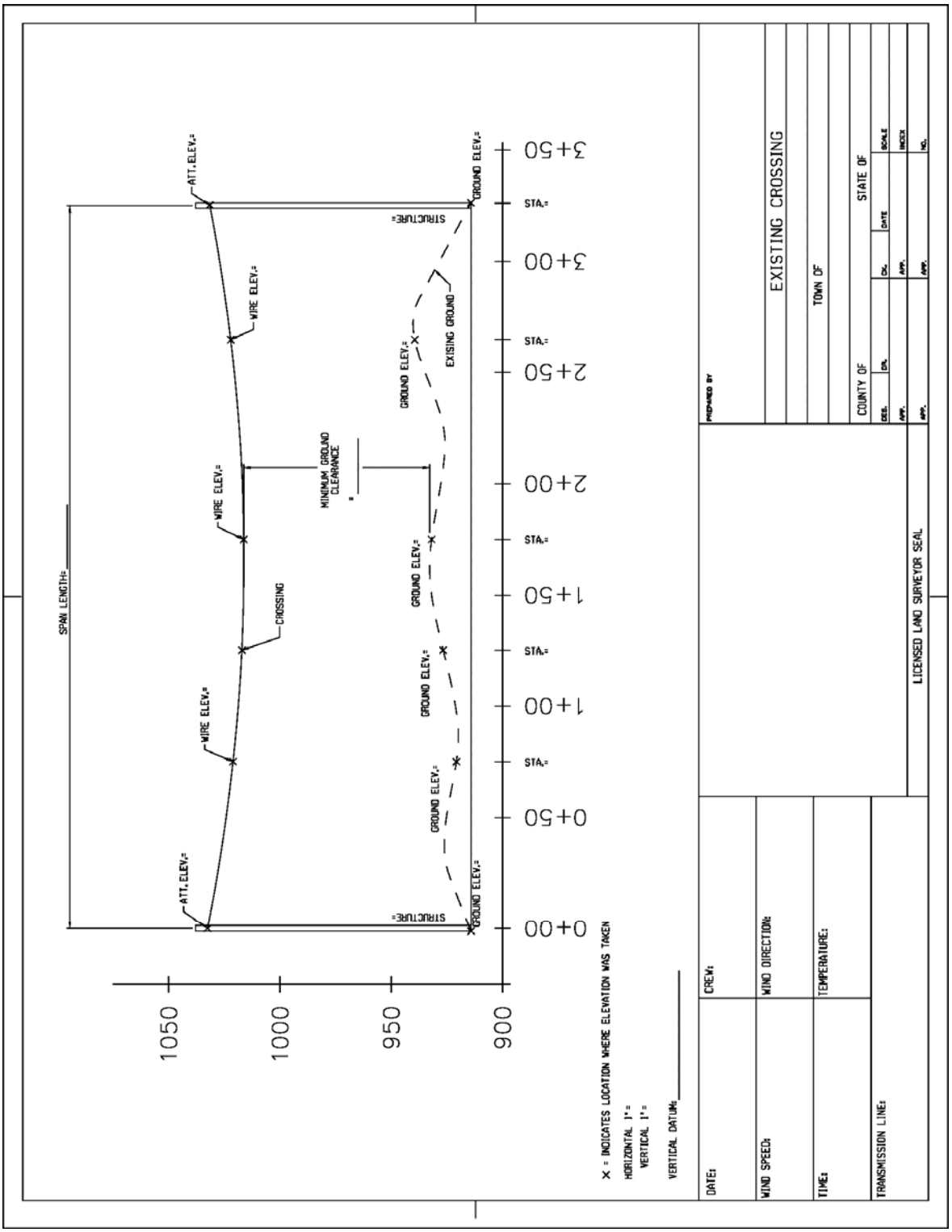
EXISTING CROSSING
TOWN OF
COUNTY OF
STATE OF
PREPARED BY
LICENSED LAND SURVEYOR SEAL
DATE:
WIND SPEED:
TIME:
CREW:
WIND DIRECTION:
TEMPERATURE:
TRANSMISSION LINE:
X = INDICATES LOCATION WHERE ELEVATION WAS TAKEN
HORIZONTAL 1" =
VERTICAL 1" =
VERTICAL DATUM:
ATT. ELEV.=
GROUND ELEV.=
STRUCTURE=
WIRE ELEV.=
EXISTING GROUND
MINIMUM GROUND CLEARANCE
CROSSING
SPAN LENGTH=
STA.=
3+50
3+00
2+50
2+00
1+50
1+00
0+50
0+00
1050
1000
950
900

Revision History

Version	Date	Revision	Author	Reviewer	Approver
1.2	07/12/2007	Revised wording relative to electrostatic currents in paragraph 6.D.to clarify the issue. Previous wording: "Mild shocks due to electrostatic currents may be felt when touching conductive objects, such as vehicles, located within the right-of-way. Although these shocks may be annoying, National Grid will not be able to eliminate them."	Mark Browne		Mark Browne
1.3	11/29/2010	Clarify that guideline applies to electric transmission rights of way Clarify that activities must comply with requirements for the voltages of lines within the right of way Add requirement to comply with MGL Chapter 166 Section 21A	Mark Browne		Mark Browne
1.4	07/11/2012	Added AASHTO H-20 load criteria requirement for proposed drive surfaces and u/g utilities.	Keith Tornifoglio		Mark Browne
1.5	03/17/2014	Added Appendix A, full-sized hardcopies to-scale, and warning tape and tracer cable for buried utilities	Keith Tornifoglio		Mark Browne
1.6	07/18/2014	OSHA clearances	Keith Tornifoglio		Mark Browne
1.7	06/03/2015	Stability Analysis, Heavy Load Crossing Designs, Field Marker update	Keith Tornifoglio		Mark Browne
1.8	07/28/2017	Increased minimum AASHTO load criteria from H-20 to HS-25, clarify no storage in ROW, added image of wire profile in Appendix A	Keith Tornifoglio	Ed Donegan	Lisa Sasur

THIS PAGE IS INTENTIONALLY LEFT BLANK

DOCUMENT A00819

Bike Wayfinding Design Guide

THIS PAGE INTENTIONALLY LEEFT BLANK

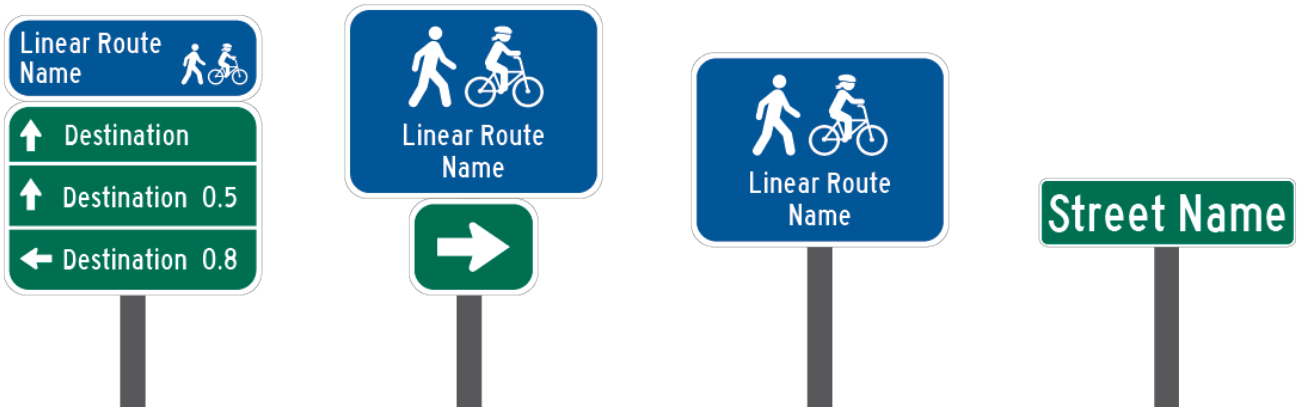

Bike Wayfinding Design Guide

Produced for the MassTrails Initiative led by the:

Governor's Office
Executive Office of Energy and Environmental Affairs
Department of Transportation
Department of Conservation and Recreation

Produced by:

Toole Design
November 2022

TABLE OF CONTENTS

1 Purpose and Overview 5
1.1 Core Wayfinding Principles 5
1.2 Guide Overview 6
2 Existing Guidance 7
2.1 Manual on Uniform Traffic Control Devices (MUTCD) 7
2.1.1 Chapter 2D. Guide Signs – Conventional Roads (2D.50 Community Wayfinding Signs) 7
2.2 MassDOT Amendment to the MUTCD 7
2.3 Department of Conservation and Recreation Graphic Standards Manual 8
2.4 American Association of State Highway and Transportation Officials (AASHTO) Guide for the Development of Bicycle Facilities 8
2.5 National Association of City Transportation Officials (NACTO) Urban Bikeway Design Guide 8
2.6 Americans with Disabilities Act (ADA) & United States Access Board 8
2.7 MassDOT Engineering Directive E-15-001: Massachusetts Bicycle Route Signing Requirements 8
3 Wayfinding for High-Comfort Routes 9
3.1 Design User 9
3.2 Bike Facilities to be Signed 10
3.3 Route Readiness for High-comfort Facilities 11
3.3.1 Infrastructure Completion 11
3.3.2 Bicycle Volumes and Demand 11
3.3.3 Topography 11
3.3.4 Site Context 11
4 Destination Selection 12
4.1 Planning Basics 12
4.1.1 Planning for US Bicycle Routes, Named Bicycle Routes, State Numbered Routes 12
4.2 Destination Selection 12
4.2.1 Destination Hierarchy 13
4.2.2 Destination and Distance 13
5 Wayfinding Sign Types & Assembly Placement 14
5.1 Confirmation Signs 15
5.1.1 Style 15
5.1.2 Placement 16
5.2 Decision Signs 17
5.2.1 Style 17
5.2.2 Placement 18
5.3 Turn Signs 19

5.3.1 Style 19
5.3.2 Placement 19
5.4 Blade Signs 20
5.4.1 Style 20
5.4.2 Placement 20
5.5 Street Name Signs 21
5.5.1 Style 21
5.5.2 Placement 21
5.6 Supplemental Signage 22
5.6.1 Map & Information Signs 22
5.6.2 Mile Markers 22
5.6.3 Gateway Signage 23
5.6.4 Pavement Markings 23
6 Sign Design for Legibility and Visibility 24
6.1 Sign Assembly Size 24
6.2 Colors 25
6.2.1 Sign Background Colors 25
6.2.2 Font & Border Color 25
6.2.3 Restricted Colors 25
6.2.4 Enhancement Marker and Logo Colors 25
6.3 Contrast 25
6.4 Retroreflectivity 25
6.5 Branding and Enhancement Markers 26
6.5.1 Route Names 26
6.5.2 Logos and Logo Hierarchy 26
6.5.3 Logo Background Colors 27
6.6 Historic-Style Signage 28
6.7 Fonts and sign Layout 29
6.7.1 Font Style and Size 29
6.7.2 Legend Alignment 29
6.7.3 Legend Height 29
6.7.4 Bike Roundabout Signage 30
6.8 Numbering, Naming, and Symbol Conventions 31
6.8.1 Numbering and Naming 31
6.8.2 Long Destination Names 31
6.8.3 Abbreviations 32

6.9 Place/Feature 32
6.10 Abbreviation 32
6.11 Place/Feature 32
6.12 Abbreviation 32
6.12.1 Service and Destination Symbols 33
6.12.2 User Symbols 33
7 Sign Installation & Placement 35
7.1 Placement for Visibility 35
7.2 Vertical and Lateral Clearance 36
7.3 Placement scenarios 37
7.4 Signing Network Gaps 41
7.5 Websites & Supplemental Wayfinding Technology 41
8 More Resources 43

1 PURPOSE AND OVERVIEW

The Massachusetts Department of Transportation (MassDOT) has produced this Bike Wayfinding Design Guide (the/this Guide) on behalf of the MassTrails initiative. The Guide presents strategies for the development of wayfinding that aids people on and en route to high-comfort bike lanes, paths, and quiet streets. The development of this Guide originates from MassDOT's 2019 Massachusetts Bicycle Transportation Plan (Bike Plan) and accompanying Municipal Resource Guide for Bikeability, which aim to promote cycling and improve public health while reducing traffic congestion and greenhouse gas emissions. The Bike Plan and this Guide seek to guide the development of wayfinding that:

- Connects people to transit and other bikeways,
- Reduces trip-planning efforts,
- Increases access to more comfortable bike facilities and the convenience of bicycling as an everyday travel option, and
- Supports bicycle tourism.

Wayfinding is about helping people find their way in unfamiliar places and giving people the means to follow new routes and modes of travel. The basic process of wayfinding involves four steps, as identified by William Lidwell, Kristina Holden, and Jill Butler in their *Universal Principles of Design*[i]:

Orientation refers to determining one's location relative to nearby landmarks and the destination.

Route Decision refers to choosing a route to get to the destination.

Route Monitoring refers to checking the chosen route to confirm that it is leading to the destination.

Destination Recognition is when the destination is recognized.

A strong wayfinding network will aid people with each of these steps, supporting movement that is more intuitive and comfortable.

1.1 CORE WAYFINDING PRINCIPLES

To help communities and agencies meet these goals, this Guide provides standards and considerations for wayfinding system planning, sign placement, and sign component design. Three core principles underlie this guidance:

Keep It Simple

Provide information in a logical format and order that can be understood by the widest possible population. Reveal information sequentially, providing only as much as needed. Avoid elements that create clutter and detract from decision-making, such as extraneous text, visuals, branding, or signs.

Be Consistent and Predictable

Use common fonts, styles, materials, and placement throughout wayfinding systems to help people quickly understand information. Help people know what to expect by exercising consistency in sign frequency and placement.

Help People Maintain Motion

Text and imagery on signs should be large and simple enough that people biking can read without stopping. To allow people biking to make decisions in time, provide adequate distance in advance of decision and turning points and between signs.

These core principles will help establish more uniform bike wayfinding signage around the Commonwealth. At the same time, the principles allow communities to develop signage that expresses identity and responds to situational context. Additionally, while the Guide primarily focuses on wayfinding for people biking on both streets

and off-street paths, it acknowledges that people on bikes often interact with pedestrians, skaters, drivers of motor vehicles, and people using other travel modes. The signage in this Guide can serve pedestrians and others who use high-comfort routes while the guidance provides the means to manage interactions with motor vehicles.

1.2 GUIDE OVERVIEW

This document provides guidance for the design and placement of wayfinding signs aimed toward people biking on high-comfort routes. The Guide includes an explanation of the connection between it and existing national and state guidance. The term, “high-comfort,” is defined, but this Guide does not address how to plan a high-comfort (also termed low-stress) network. For information related to route selection and planning high-comfort networks, refer to the MassDOT Separated Bike Lane Planning & Design Guide.

The Guide outlines the methods for selecting destinations to list on signs. It also provides criteria for determining route readiness for wayfinding. Most of the Guide delves into sign design and placement. Wayfinding sign types are discussed along with sign design for legibility. Several placement scenarios are provided to clarify how and where to use the various sign types.

Mandatory Standards vs Recommended Guidance

Like the MUTCD, this Guide contains language that indicates whether a rule is mandatory to follow or merely recommended.

Shall signifies a standard that is mandatory to follow unless an exemption is sought from the MassDOT Highway Division.

Should indicates a recommendation that is made as a best practice but which is not mandatory to follow.

Key Terms

Bike Route: a bike route is a designated route for people on bikes to take in an area. They usually include signage to establish this designation. This guide seeks to promote bike routes on high-comfort facilities, but in broader usage, bike routes may be designated for reasons that do not consider cyclist comfort and safety as a top priority.

Bikeway: a bikeway is a space designated for people biking that is distinct from motor vehicle traffic. This includes shared use paths, separated bike lanes, buffered or conventional bike lanes and advisory bike lanes. Shared lane markings (“sharrows”), bike boulevards, and signed routes are contributing elements of bikeways, not dedicated bikeways by themselves.

High-Comfort Network: high-comfort networks are comprised of interconnected high-comfort facilities, including both on- and off-street routes. A network might incorporate a popular shared use path plus multiple on-street lanes. Generally, high-comfort networks will include crossings and intersections that do not compromise bicyclist safety or comfort.

Linear Route: a linear route is a single route that stretches between one starting location and one end location. That route is not necessarily a straight line; it might involve a few turns at a tricky intersection, but the A to B nature of the route is the same. In this guide, linear route is frequently used as a bucket by which to refer to shared use paths and side paths simultaneously.

Path: short for a shared use or side path

Trail: used interchangeably with path, trail may also be used specifically when discussing “rail trails” or named trails, as many shared use paths within MA are called trails.

2 EXISTING GUIDANCE

The following sources provide national or state guidance on bicycle wayfinding.

2.1 MANUAL ON UNIFORM TRAFFIC CONTROL DEVICES (MUTCD)

The Federal Highway Administration's Manual on Uniform Traffic Control Devices (MUTCD 2009 edition) holds jurisdiction over all signs on any road or bikeway open to public travel. This includes all shared use paths and separated or conventional bike lanes. The MUTCD covers:

D1-3c

- Sign design for bicycle guide (wayfinding) signs, bicycle routes, and auxiliary plaques, based on a smaller size of the D-series guide signs for motorists.
- Symbols and appropriate abbreviations for destination names
- Placement, mounting height requirements, sign size, and layout

Priority MUTCD sections for bike wayfinding are Chapter 2D and **Part 9**. These sections should be consulted before undertaking any wayfinding development project.

2.1.1 Chapter 2D. Guide Signs – Conventional Roads (2D.50 Community Wayfinding Signs)

MUTCD Section 2D.50 Community Wayfinding Signs makes allowances for signs that can be recognized as part of a coordinated and continuous area-based wayfinding system. With restrictions, Section 2D.50, provides flexibility for non-standard colors, fonts, and enhancement markers.

Rigid MUTCD ⟷ Flexible MUTCD

Currently, Community Wayfinding only applies to on-street bicycle routes, but in June 2014 the National Committee on Uniform Traffic Control Devices recommended that shared use paths be incorporated under Community Wayfinding in the next update of the MUTCD. MassDOT interprets Community Wayfinding as applying to both on-street bike routes and shared use paths.

2.2 MASSDOT AMENDMENT TO THE MUTCD

MassDOT provided a 2012 amendment to the MUTCD which clarifies that the design of destination signs for Massachusetts streets and highways shall follow MassDOT *Guide Sign Policy for Secondary State Highways*. The Guide is consistent with these following policies:

- alternative fonts such as "Clearview" shall not be permitted for use on legends on directional or street name signs for streets and highways within Massachusetts.
- street name signs shall consist of white legend on green background unless otherwise approved by MassDOT for a municipality. Borders shall be provided on all street name signs.

The amendment mandates that where direction text (North, South, East West) is abbreviated in sign legends, a period must be used for emphasis (i.e. N. Attleboro). However, due to the limited size of bike wayfinding signs, abbreviated directions may be used with or without periods provided that a discernible space between the abbreviation and adjacent legend is maintained.

2.3 DEPARTMENT OF CONSERVATION AND RECREATION GRAPHIC STANDARDS MANUAL

The Massachusetts Department of Conservation and Recreation (DCR) published standards for signage on DCR property within its Graphic Standards Manual. The document does not provide guidance for high comfort bike wayfinding but does guide gateway/identification signage, road lead-in signage, internal park information signs, and map signage, called welcome waysides.

2.4 AMERICAN ASSOCIATION OF STATE HIGHWAY AND TRANSPORTATION OFFICIALS (AASHTO) GUIDE FOR THE DEVELOPMENT OF BICYCLE FACILITIES

The AASHTO guide is consistent with and provides supplemental information to the MUTCD. A forthcoming update will contain a full chapter on wayfinding, expanding on the current 2012 guide. The current guide discusses the MUTCD D Series and MUTCD national and state route (M1) signage. The update will expand on the nuances of these signs while covering the MUTCD Community Wayfinding Series plus the East Coast Greenway system. The forthcoming guide will also discuss applications, sign types, and supplemental signs such as mile markers.

2.5 NATIONAL ASSOCIATION OF CITY TRANSPORTATION OFFICIALS (NACTO) URBAN BIKEWAY DESIGN GUIDE

The NACTO Urban Bikeway Design Guide provides guidance based on current best practices in large cities. It covers types of signs and destinations, pavement markings, typical applications, and design guidance.

2.6 AMERICANS WITH DISABILITIES ACT (ADA) & UNITED STATES ACCESS BOARD

The ADA currently does not guide exterior wayfinding systems. It does provide guidance on protruding objects and clear width on accessible routes, with the guidance aimed toward pedestrians. Guidelines for shared use paths are under development and will address post mounted objects and sign legibility. While this guidance is still aimed toward pedestrians, of significance to note is the proposal calls for text heights of over 2 inches at sign heights and distances relevant to people biking. Font sizes are discussed later in the Guide.

2.7 MASSDOT ENGINEERING DIRECTIVE E-15-001: MASSACHUSETTS BICYCLE ROUTE SIGNING REQUIREMENTS

MassDOT Engineering Directive E-15-001 was published June 17, 2015 and designates how bike routes are to be signed in MA according to MUTCD standards. The directive applies to all bicycle route (guide) signage on State Highway and on other roads and paths that are constructed by MassDOT. It also encourages municipalities to adopt the requirements elsewhere to increase uniformity.

3 WAYFINDING FOR HIGH-COMFORT ROUTES

This Guide incorporates existing standards and recommendations while providing detailed sign design and placement guidance to address the needs of all potential bike riders.

3.1 DESIGN USER

Following the lead of the Bike Plan, this Guide is aimed to support the development of wayfinding systems for current and potential cyclists, particularly for people "interested but concerned" about biking. People who are "interested but concerned" may or may not bike currently and would consider biking as a more viable travel mode if the routes to their destinations were safe, comfortable, and convenient from start to finish. Wayfinding is a means for increasing the comfort of people in this group, by providing guidance, reassurance, and supporting ease of movement along a route. The "interested but concerned" group includes people of all ages and abilities and who account for around 60%[ii] of the general population. This group also includes visitors to and new residents of a community, and those who are established in a place but trying to follow unfamiliar routes.

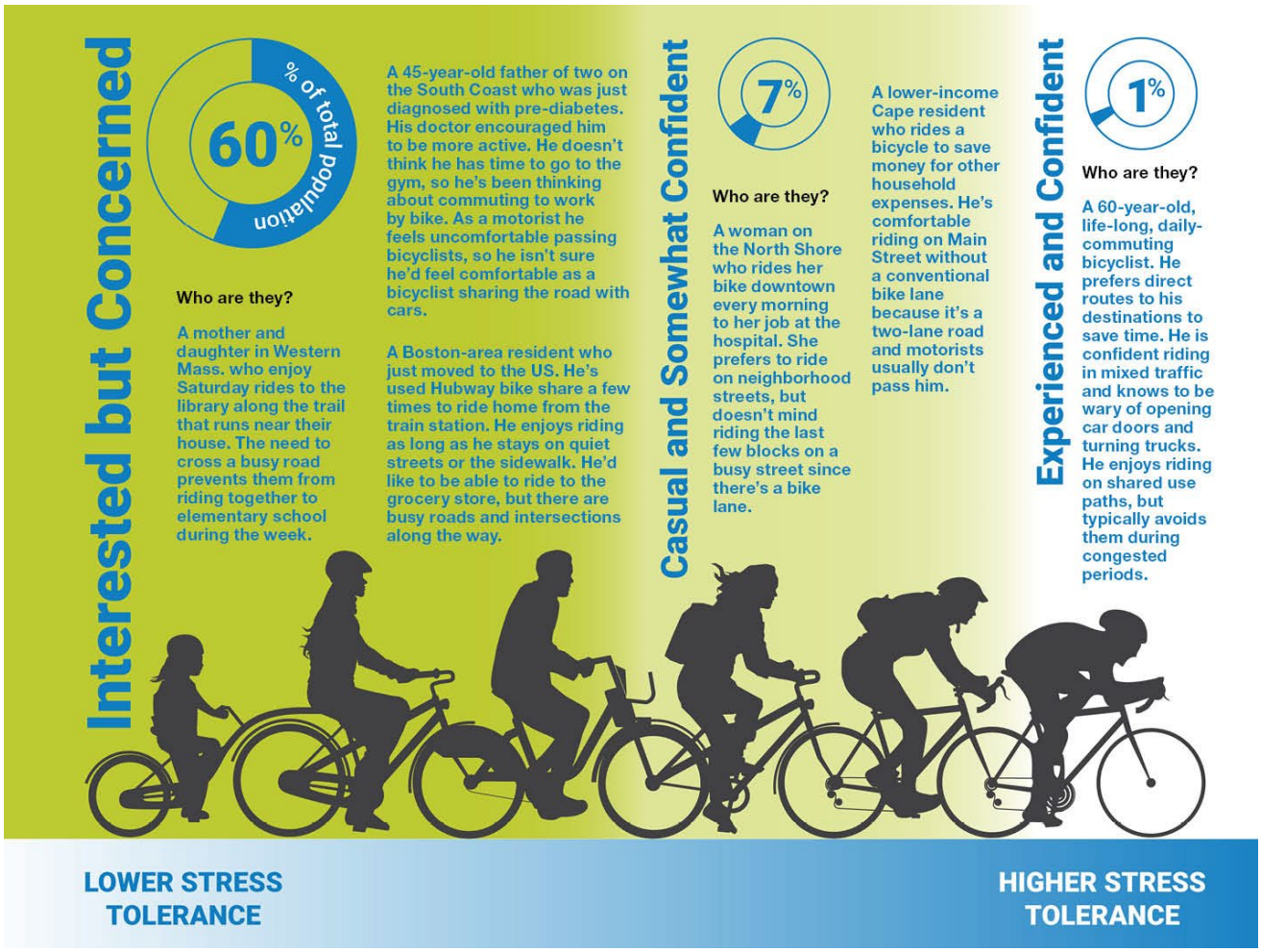

Figure 1. Different comfort levels of people who bike (MassDOT Separated Bike Lane Planning & Design Guide)

To aid the "interested but concerned," signs and sign content shall be as visible as possible for people with varying vision abilities. Sign content shall prioritize destinations important to a wide range of people – old, young, commuters, and recreational riders, etc. Symbols and route logos should be used to provide information and continuity for everyone. They will particularly aid those whose primary language is not English. Finally, sign quantity and placement shall prioritize people looking for safe and comfortable routes over the shortest routes.

3.2 BIKE FACILITIES TO BE SIGNED

Generally, high-comfort bike facilities will have higher levels of separation between bikes and motor vehicles, such as wide buffers or vertical separation. Alternately, all modes may share the same space on low-speed, low traffic volume streets, such as on bike boulevards. The following are typical high-comfort facilities:

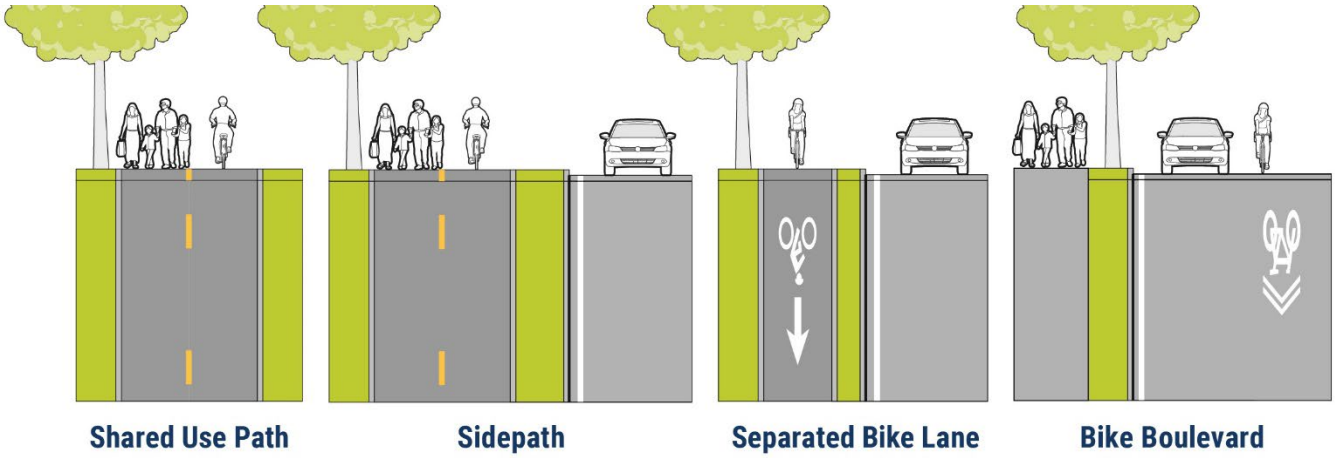

Figure 2. High-comfort facilities

Shared use paths are used by people biking, pedestrians, skaters and others and can be separated from motor vehicle routes by buffers of any size or by entirely separate routes. Regional shared use paths provide connections between municipalities. Short shared use path segments can provide links between disconnected neighborhood streets.

Side paths are shared use paths that parallel and run near roadways, often with a small grass/vegetated buffer separating the path and roadway.

Individually, shared use paths and side paths can be considered linear routes, since they stretch between one starting location and one end location. These paths may include some gaps, such as a jog at an intersection, but the A to B nature of the routes is the same. Signage examples in this Guide may say “Linear Route Name” to refer to these types of facilities.

Separated bike lanes provide vertical buffers, whether curb or parked cars, between people biking and motor vehicle travel lanes.

Bike boulevards are low speed (≤ 20 miles per hour), low traffic volume (≤ 2000 vehicles per day) streets designated for use by people on bikes with signage and pavement markings. They are also called neighborhood greenways, neighborways, or slow streets. Technically, bike boulevards are not dedicated bike facilities (or bikeways), since the roadway is shared with motor vehicles, but they can be important components of high-comfort bike routes.

High-comfort networks are comprised of interconnected high-comfort facilities. For instance, a network might incorporate a popular shared use path, with gaps in the path filled by quiet bike boulevards and streets with separated bike lanes. Generally, high-comfort networks will include crossings and intersections that do not compromise bicyclist safety or comfort. Successful networks will connect people to destinations and provide comfortable routes to transit. Consult MassDOT’s *Municipal Resource Guide for Bikeability* for more information on high-comfort networks and facilities.

It is important to note that wayfinding alone will not help improve the comfort of a route. Wayfinding is meant to supplement and support high-comfort bikeway infrastructure like the facilities described above.

3.3 ROUTE READINESS FOR HIGH-COMFORT FACILITIES

Route readiness refers to the overall status of a route in terms of its conditions for safe, comfortable bike riding and wayfinding signage. MassDOT has defined on the previous page the types of facilities that should be available for routes to be considered high-comfort. Level of infrastructure completion, bicycle volumes, topography, and site context also help determine route readiness.

3.3.1 Infrastructure Completion

A high-comfort facility might be complete unto itself and appropriate for applying wayfinding to just that facility if it reaches priority destinations. However, consider that most routes tend to have some gaps in high-comfort infrastructure, such as at complex intersections. Within a selected route and regardless of length, assess:

- How frequently bicyclists need to use curb ramps and sidewalks;
- Whether signal modifications, crossing islands, or other infrastructure are needed to increase safety and comfort at intersections;
- Potential difficulty with left turn movements;
- Maintenance issues – poor pavement conditions, debris accumulation, and striping needs.

Determine how to fill observed infrastructure gaps. If multiple gaps exist with too few funds to fix them, consider that the route may not really be high-comfort and worth signing for wayfinding until the gaps are filled. Also consider that many destinations are likely to be reached through a combination of paths and streets – a network – and that it may be wiser to invest in high-comfort facilities throughout a network before investing in wayfinding.

Where an otherwise high-comfort route is broken up by unsafe conditions in a limited but complex location, such as at a major intersection undergoing reconstruction, consider providing temporary signage that warns of the hazards and how more comfortable conditions can be found while creating safer conditions in that location.

In general, prioritize modifications that help slow motor vehicles, increase visibility for all users, and clearly designate spaces for people biking. Where those changes can be made in tandem with wayfinding, prioritize both, but recognize that wayfinding needs well-placed, well-designed signs that lead people to destinations to be an effective investment in a high-comfort network.

3.3.2 Bicycle Volumes and Demand

When evaluating facilities in your community, observe the high-comfort routes with higher bike traffic. These may be good candidates for signage if they connect priority destinations. These routes may gain more bike traffic, particularly in tourist seasons, so balance signing high-volume facilities with placing signs on quieter streets.

3.3.3 Topography

Massachusetts slopes may be unexciting for some confident riders, but they can be intimidating for many people, including those with health problems, parents riding with children, and people who fear unexpected vehicles or faulty bicycle brakes. Flatter routes make riding more manageable for a broader range of abilities and age groups.

3.3.4 Site Context

While level of separation, traffic volumes, and speeds are traditionally prioritized factors when determining whether a route is “high-comfort,” MassDOT acknowledges that views, shade, lighting, availability of seating, and other amenities like public art can contribute to comfort as well. Routes with these features may be some of the readiest for wayfinding and the best routes for recreation and promoting bicycle tourism.

Signage should not be prioritized for placement where it physically damages environmental and cultural resources or noticeably detracts from an important viewshed. Consider that wayfinding signs, like any other signage, can contribute to visual clutter and the incoherence of the sign(s). Consider placement so that visual clutter is minimized, and avoid shoehorning signs where they cannot be viewed or understood quickly. See *Chapter 7 Sign Installation & Placement* for more details.

4 DESTINATION SELECTION

MassDOT encourages municipalities to view wayfinding as one tool of many for increasing comfort and forming connected bike networks. To aid bicyclists in route decision-making and orientation, municipalities must first identify the content to include in wayfinding signage – destinations, services, and any named routes.

4.1 PLANNING BASICS

Many communities have created or are in the process of creating bike master plans where streets and shared use paths are already being analyzed for their potential to support high-comfort bike travel. Staff and consultants working on wayfinding should coordinate on the availability of these plans in their communities and work with other stakeholders to evaluate the routes highlighted within for their wayfinding potential. This involves identifying the routes that connect people to priority destinations and assessing the comfort level of those routes. MassDOT encourages advocates and municipal staff to conduct planning sessions aimed to capture the input of people of all ages, abilities, socio-economic status, and identities. Consider asking people to create mental maps of routes they take or would like to take to destinations they consider significant, including those in neighboring communities. MassDOT encourages municipalities to partner together to plan wayfinding systems for the routes that connect them.

4.1.1 Planning for US Bicycle Routes, Named Bicycle Routes, State Numbered Routes

As per MassDOT Engineering Directive E-15-001, the planning of a U.S. Bicycle Route in Massachusetts is the responsibility of MassDOT's Office of Transportation Planning. The final route designation of any U.S. route must be approved by the American Association of State Highway Transportation Officials (AASHTO) Special Committee on U.S. Route Numbering. Only after this approval has been received may the U.S. Bicycle Route signs be used.

The planning of named bicycle routes, such as the East Coast Greenway, or state numbered routes should also be coordinated through the Office of Transportation Planning. This will help to improve connectivity and consistency with the statewide Bicycle Transportation Plan and other state bicycling initiatives.

4.2 DESTINATION SELECTION

Whether with the public or in smaller advisory groups, wayfinding planners need to identify destinations for inclusion in wayfinding and to categorize destinations according to their distance and significance. This affects the content that changes by sign. To select destinations, communities should consider whether destinations are:

- Of significant interest to many people, including both tourist sites and major transit centers
- Distinctive in their contribution to local identity, heritage, culture, or recreation
- Useful for general orientation (e.g. landmarks)
- Publicly owned or not-for-profit.
- Reachable by high-comfort route

General shopping areas or corridors (e.g. Chelmsford Shopping District) may serve as destinations, but avoid referring to specific businesses.

4.2.1 Destination Hierarchy

Destinations that meet the above criteria should be prioritized within a hierarchy. This will help planners further distinguish which places are truly important to include on wayfinding while aiding in the determination of how far from a destination references to it will appear on signs. Figure 3 provides a potential model for establishing a hierarchy. Level 1 destinations will be cities, towns, or other major destinations that are most likely to communicate to riders where a route is ultimately going. These destinations will be included on the most signs. Level 2 destinations will have broad appeal for riders looking to stop in a municipality or connect to other modes of travel. Level 3 destinations may be relevant only to locals or those looking for specific services, such as restrooms located in a park.

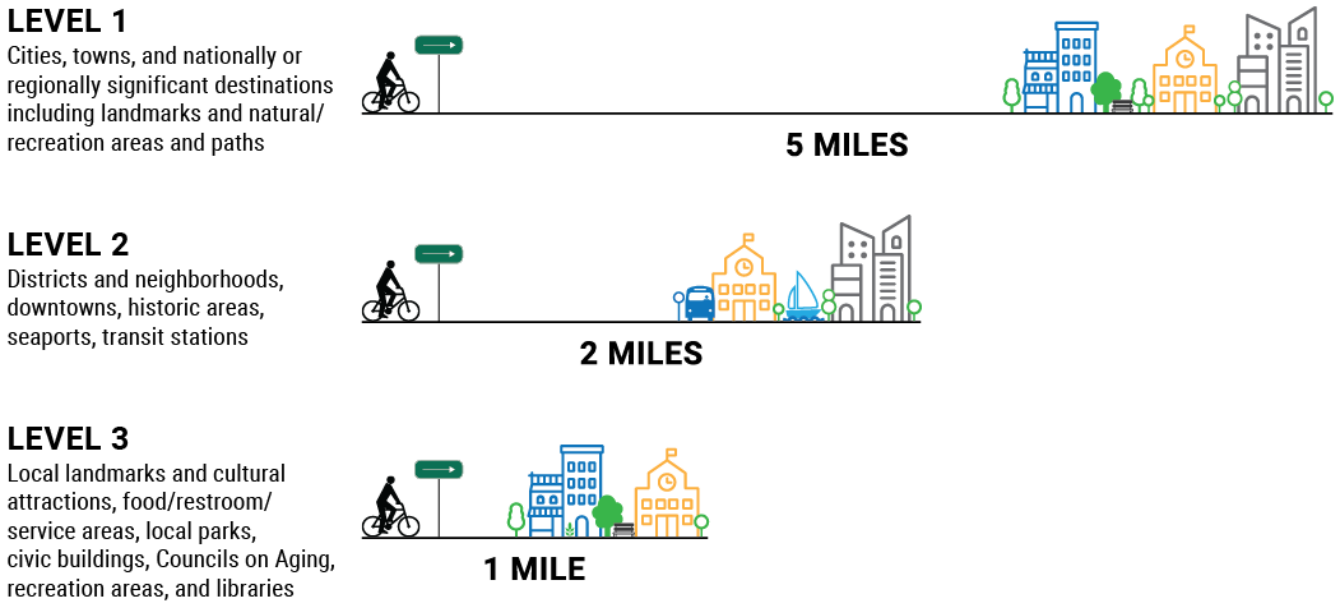

Figure 3. Hierarchy of destinations by distance

4.2.2 Destination and Distance

The names of destinations should be progressively disclosed so people on bikes are not overwhelmed at any one decision point or sign assembly. Knowing when to introduce a new destination depends largely on its importance and distance from the sign. Note that destinations are not always dots on a map. Recreational bikeways can be destinations themselves. As Massachusetts builds more of its high-comfort route system, wayfinding should aid people biking on multiple routes.

In practice, the distance at which each destination appears on wayfinding signs will require the judgement of the people planning wayfinding along a route. However, municipalities may consider the distance ranges in Figure 3 for selecting destinations to sign. Regionally important destinations will be signed starting at greater distances from their locations than more local destinations. Specific sign placement information is provided under *Chapter 7 Sign Placement and Installation.*

5 WAYFINDING SIGN TYPES & ASSEMBLY PLACEMENT

Bicycle wayfinding systems are made up of four fundamental sign types:

- **Confirmation signs** let people on bikes know they are on a designated bike route while alerting motorists to bicyclists' likely presence. These signs may identify an official name/brand for the route.
- **Decision signs** provide guidance at decision points, or where multiple routes intersect, where bicyclists must decide which way to proceed.
- **Turn signs** indicate to people on bikes when the only option to remain on a route is to turn. Turn signs include a confirmation plate plus turn arrow.
- **Street name signs** aid in orientation by providing the names of streets at intersections and crossings.

Signs may be combined with one another in an assembly, a term used to refer to the full collection of signs on a post, often including the post itself. With this Guide, MassDOT has standardized the appearance and dimensions of these sign types and assemblies for use in the Commonwealth. The standard sign family includes the signs shown below and with optional details as provided within this section. Colors, fonts, and other sign features are specified. Allowances for signs with historic styles are provided in *6.6 HISTORIC-STYLE SIGNAGE*.

Standard Sign Family

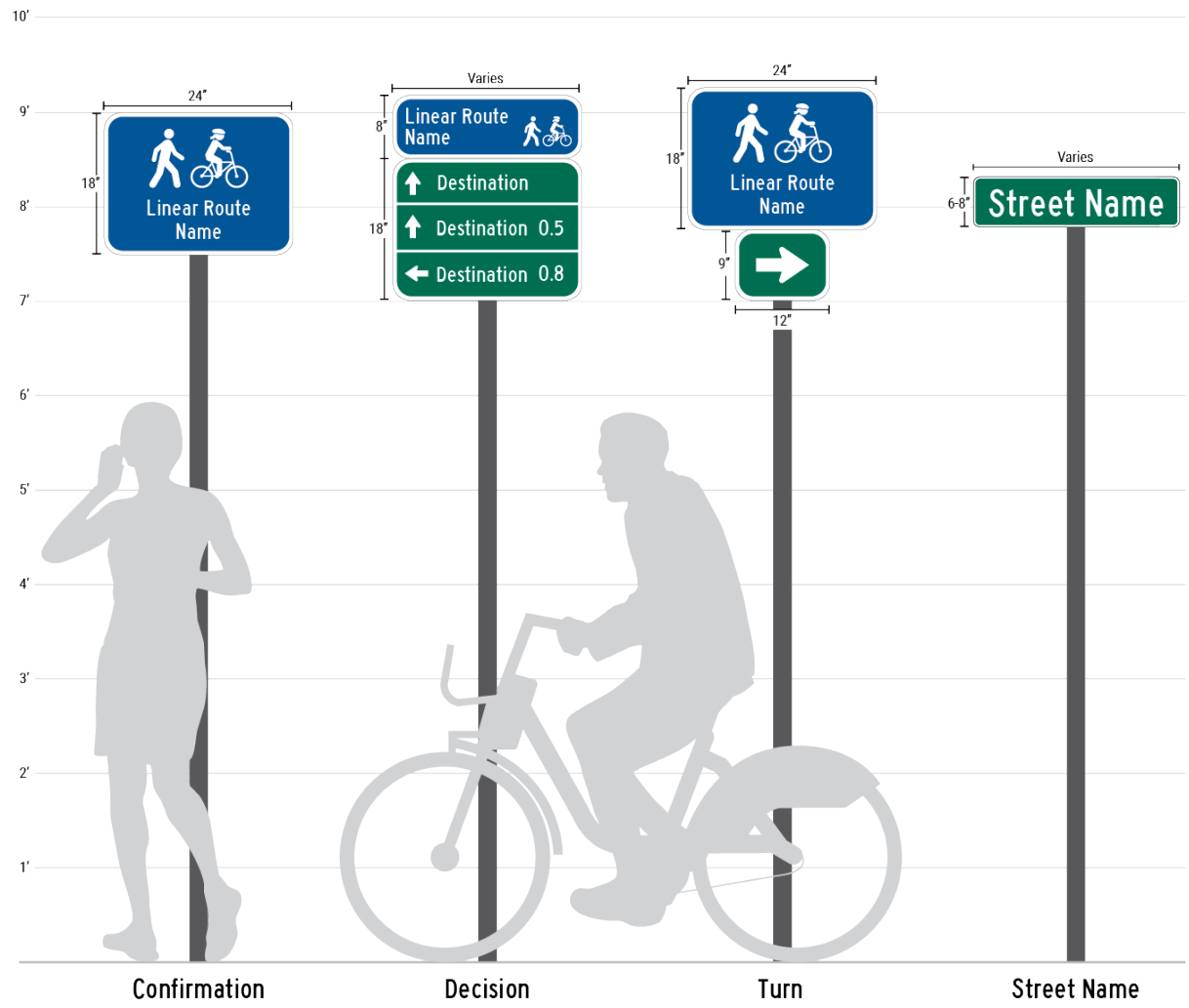

Figure 4. The four sign types that make up the standard sign family

5.1 CONFIRMATION SIGNS

Confirmation signs assure people on bikes of being on their chosen route. They do this either by identifying the route a rider is on or by identifying the destination toward which a person is headed. When used near roadways, they also signal to drivers that people on bikes may be present. Confirmation signs may be used by themselves. They should be used on top of decision signs and shall always accompany turn arrows placed along a route.

Standard MUTCD D11-1 signs contain a bike symbol plus the words “BIKE ROUTE.” While this helps to identify that a bike route exists, the Commonwealth wants to make guide signage more informative. In Massachusetts, confirmation signs should contain the following:

- On named linear routes: the route name and/or logo shall be provided instead of BIKE ROUTE as seen on standard D11-1 signs.
- On unnamed routes: the nearest or most significant destination should be listed after “TO” (ex. TO DOWNTOWN)” instead of BIKE ROUTE. Where no clear destination may be listed, such as when a rider has just passed or is facing away from a destination, a D11-1 BIKE ROUTE sign is permissible.

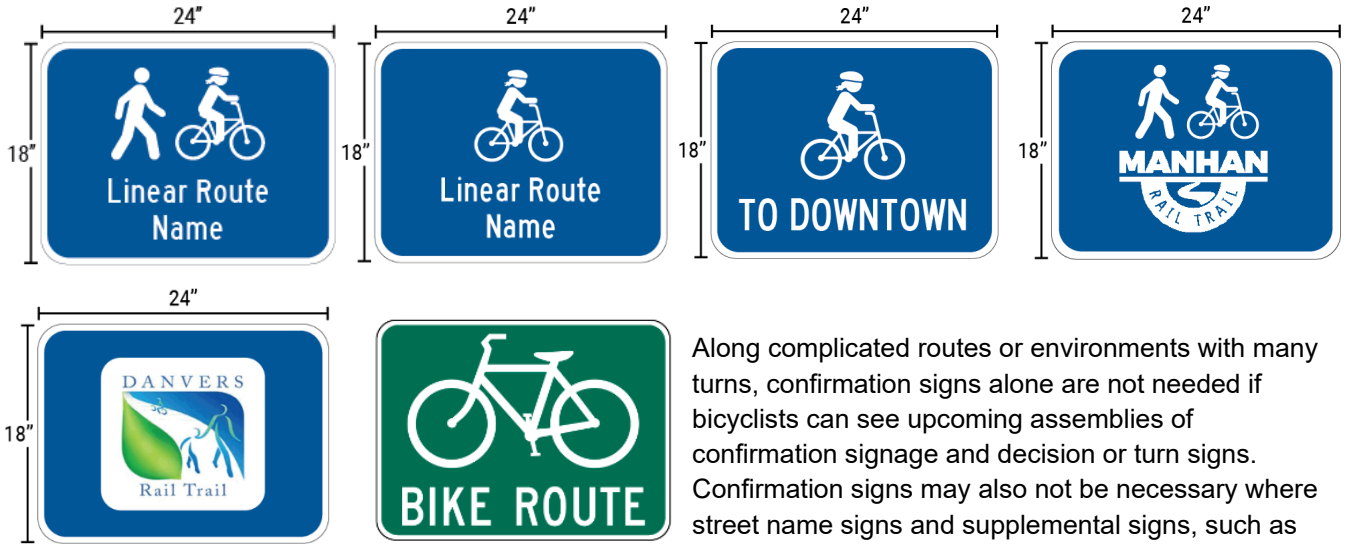

Figure 5. Acceptable confirmation sign variations with the green MUTCD D11-1 sign to be used when routes are unnamed or no clear destination can be listed.

Along complicated routes or environments with many turns, confirmation signs alone are not needed if bicyclists can see upcoming assemblies of confirmation signage and decision or turn signs. Confirmation signs may also not be necessary where street name signs and supplemental signs, such as map kiosks or gateway signs, already establish the identity of the route.

See specific placement considerations under *5.1.2 Placement*.

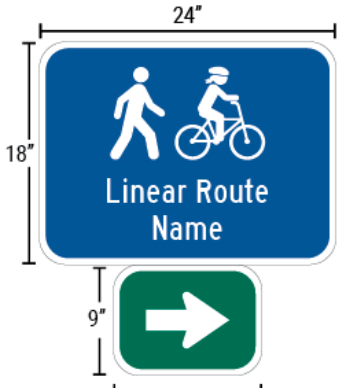

Figure 6. Confirmation sign with turn sign

5.1.1 Style

When Provided Alone or with a Turn Sign

Confirmation signs should appear in 18” x 24” rectangular format when provided alone or with a turn sign. The bicyclist symbol, described under *6.11.2 User Symbols* should appear over top the route name or “TO [destination]” on roadside signs and/or when a named linear route is not uniquely branded. The pedestrian symbol is also encouraged for use where pedestrians share the same facility. If used, the pedestrian symbol should be placed to the left of the bicyclist symbol.

If the route has an established logo, that logo may be incorporated according to the guidance under *6.5 BRANDING AND ENHANCEMENT MARKERS*.

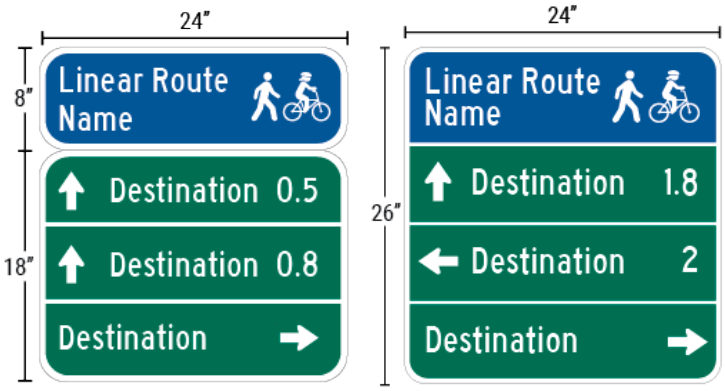

Figure 7. Confirmation signs on top of decision signs, both in separate and incorporated panels

When Provided with a Decision Sign

If provided on top of a decision sign, the confirmation plate can be considered an enhancement marker as described in *MUTCD Chapter 2D. Community Wayfinding*. In this case the confirmation plate should appear on top of the decision information in either a(n):

- 8" tall rectangular shape plate that varies to match the width of the sign or,
- semicircular shape in any of the sizes shown below in Figure 8.

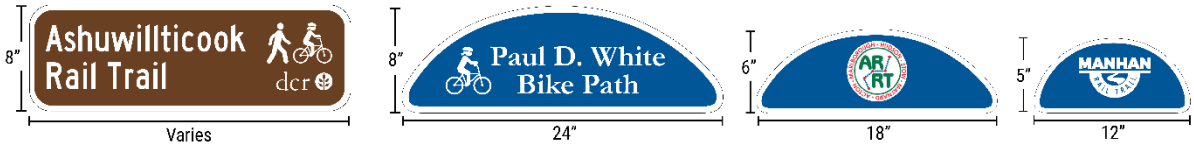

Figure 8. When placed at the top of decision signs, confirmation signs are called enhancement markers and may be formatted in half circles at the sizes shown. See Chapter 6 SIGN DESIGN FOR LEGIBILITY AND VISIBILITY for details on formatting and fonts.

A confirmation panel can either be mounted in its own plate or incorporated into the decision panel as shown in Figure 7.

A bicyclist symbol shall be used within a confirmation plate for roadside signage to designate the route for cyclists. This includes signage on side paths where drivers may otherwise be confused by the wayfinding.

Pedestrian and bicyclist symbols are encouraged for use together on shared use paths.

Colors, fonts, and branding are described in *Chapter 6 SIGN DESIGN FOR LEGIBILITY AND VISIBILITY* along with more details on use of bicyclist and pedestrian symbols.

5.1.2 Placement

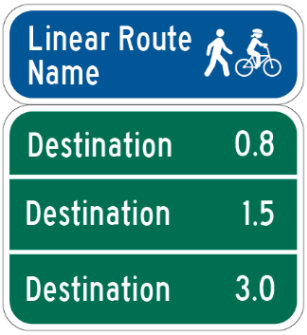

Figure 9. Confirmation sign and distance panel

Confirmation signs should be located:

- At the start of a route unless a supplemental sign clearly identifies the route. See *5.4 Supplemental Signage* for more details on supplemental signs.
- 50-100 feet beyond the far side of roadway intersections and beyond locations where bike routes intersect. Confirmation signage is most important to include where people may question a decision and movement they have made, such as intersections that require indirect routing or where intersections have more than 4 approaches and/or turns that are not 90 degrees.
- At intervals on bike route segments without turns or other signs. In rural areas, confirmation signs should be placed every 2 miles where signage is scarce.

Confirmation signs may be paired with a destination plate that contains distance listings in miles without directional arrows to signal distance to destinations further along a route. This combination is particularly helpful to place where routes leave settled areas so path users are informed of when they will next reach a destination. The nearest destinations should be listed on top and the farthest at the bottom.

5.2 DECISION SIGNS

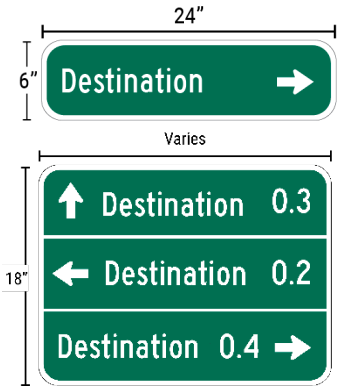

Figure 10. Single- and multiple-destination decision sign panels.

Figure 11. Decision sign panel with destinations grouped

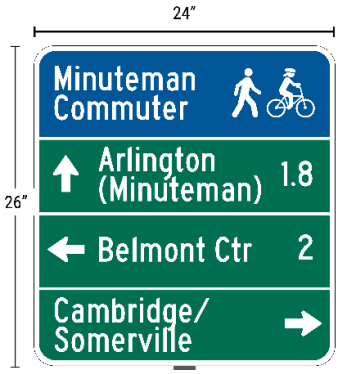

Figure 12. Decision sign panel with route confirmation/ID sign

Decision signs are installed where a bicyclist needs to decide about their destination and direction. Decision signs shall be used:

- In advance of intersections/crossings
- At junctions of intersecting bikeways
- On cross streets that may generate a significant number of route users to inform people biking and motorists of the presence of the bikeway and the destinations that can be reached on it.

5.2.1 Style

Decision sign panels are part of the D series Destination signs referenced in Chapter 9B of the MUTCD. Decision panels shall contain a green background, white border, and white font except as listed under *6.2 COLORS*. Information shall include destination names and directional arrows. Decision signs may contain one destination, or white horizontal divider lines shall be used to separate each destination or groups of destinations. Decision signs should list a maximum of three destinations to maintain legibility.

Order the destination panels from top to bottom as follows:

- Through (straight) destinations
- Left-turn destinations
- Right-turn destinations

This order does not change according to proximity to location. A through destination that is a mile further away than a left located destination should still be listed at the top of the panel. If two locations share the same arrow direction, the closer location shall be listed above the other.

Through and left arrows shall be placed to the left side of the destination name while right arrows shall be placed to the far right of the destination name and distance information if included. One arrow may be used for multiple destinations located in the same direction. In this case the arrow should be centered to the left or right of the group.

Diagonal destination arrows are not specifically guided within MUTCD decision signage for bikes, but MUTCD Part 2D clarifies that arrows should be pointed at angles that clearly indicate the directions of routes. On Massachusetts routes, diagonal arrows may be used on signage where horizontal or vertical arrows may otherwise confuse viewers.

Decision signs should include distance numerals:

- calculated in miles
- written in decimal format and rounded to tenths as a smallest increment
- written with a zero placed before the decimal, e.g. 0.5, when distances are less than one mile

Numerals can compete with other sign content, and super accuracy becomes less relevant at greater distances. For instance, 10.3 miles occupies much space, while the .3 barely registers against the 10 miles. So, for distances up to 5 miles round to the nearest tenth of a mile; between 5-10 miles, to the nearest half-mile; and over 10 miles, to the nearest mile.

Distance does not need to be included when .2 miles or under or when the destination is a landmark, such as a water body, that is easily viewed and recognized from a route. The destination itself could be excluded from the sign in that case. Distance numerals shall be placed to the right of destination names and should not be written with “mi” or any other unit of measurement.

On named routes, a route confirmation/identification sign should be placed over top the decision sign or incorporated at the top of the same panel with the decision information listed underneath.

As in the MUTCD, a bicyclist/bicycle symbol should be placed next to each destination or group of destinations if near a roadway. This may be accomplished either with bicyclist symbols in the decision panel or in accompanying confirmation panels/enhancement markers. Full use and layout details for the bicyclist symbol are listed under *6.11.2 User Symbols.*

5.2.2 Placement

On shared use paths, decision signs should be placed 100 feet before a turn is to occur, or as close to 100 feet as feasible if space is limited. Along on-street routes, or where linear routes cross intersections, decision signs should be placed at the following distances based on number of lanes people biking need to cross to make legal left turns:

- Zero-lane merge (also right turns): 25 feet
- One-lane merge: 100 feet
- Two-lane merge: 200 feet

When a decision sign is placed more than 100 feet in advance of a turn, a “second chance” decision sign should be placed at the intersection so it can be seen from the waiting area for the left turn.

5.3 TURN SIGNS

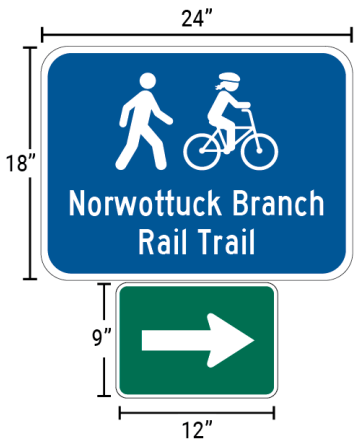

Figure 13. Turn arrows aid cyclists in understanding route direction

Turn signs include MUTCD M6 series arrows that show a change in the direction of a route. Turn signs are:

- Used in advance of a turn in the route
- NOT used at the junction of intersecting bikeways where a decision sign should be used instead or when a decision sign would be used to indicate destinations off the bikeway.

5.3.1 Style

A turn sign shall always have a white arrow on a green background. M6 turn arrows shall not appear alone but in assemblies that include a confirmation sign.

Turn signs may include any of the MUTCD M6 series arrows.

5.3.2 Placement

Turn signs should generally be located 25-50 feet in advance of turns across low traffic/narrow streets. These scenarios may include:

- intersections where routes turn to follow low-traffic bike boulevards
- locations where a sidepath transfers from one side of the road to another
- jogs in a shared use path, such as from a path to a short on-road segment back to the path

On sloped streets in the downhill direction, signs should be about 50-100 feet in advance of the intersection due to the higher travel speed of people biking.

When the route indicates a left turn that requires people biking to move across traffic lanes, a decision sign should be placed the following distances in advance of the turn:

- One lane merge: 100 feet
- Two lane merge: 200 feet

Figure 14. A trail sign assembly with turn sign and confirmation sign

When a decision sign is placed more than 100 feet in advance of a turn, a “second chance” turn sign should be placed at the intersection so it can be seen from the waiting area for the left turn. Consider that left turns for people on bikes may be uniquely designed to increase safety and that waiting areas may include queue boxes or jughandles where people on bikes have turned perpendicular to the direction from which they rode.

When a street widens to include a right turn lane for motorists in advance of an intersection, people on bikes must decide what lane they should use to reach their destination. If the main bike route follows the turn, aid people on bikes by placing turn signs near the start of the taper of the right turn lane.

5.4 BLADE SIGNS

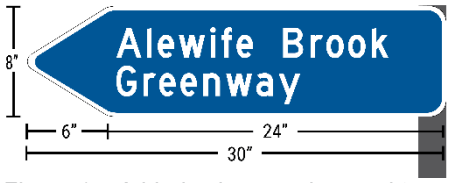

Figure 15. A blade sign may be used to indicate a turn in a route

Blade signs make up unique assemblies that provide direction through the pointed ends and alignment of each blade. These are not new types of sign assemblies but rather substitutes for the decision and turn signs from 5.2 and 5.3. Blades may be single- or double-sided, and double-sided blades may be aligned around a post in up to four directions.

Blade sign assemblies shall only be used on off-road paths/trails with enough space to meet required vertical and horizontal clearances. Blade assemblies may be used as the principle wayfinding system along a linear route or in spot locations such as trail junctions and on-street to off-road path transitions.

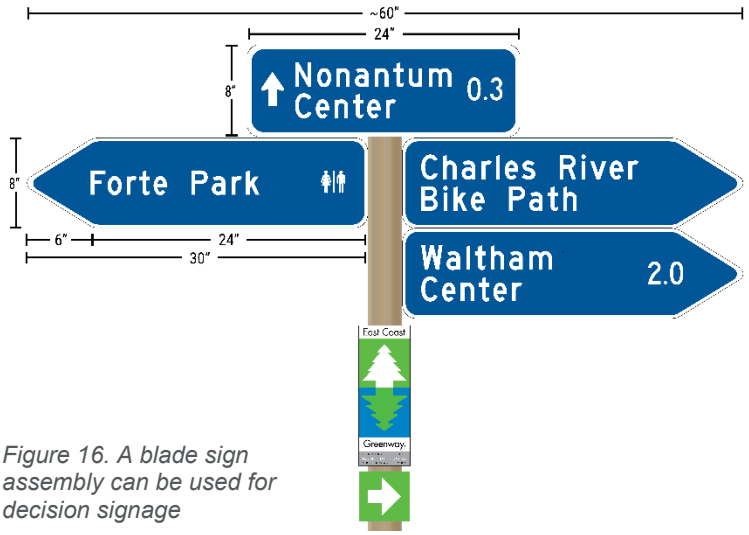

Figure 16. A blade sign assembly can be used for decision signage

Exercise caution in designing blade assemblies and determining placement, as sign faces must be visible to riders approaching from multiple directions. Blade signs require more planning, construction drawing time, and in-field install observation to ensure correct panel formatting and placement.

5.4.1 Style

Unlike rectangular assemblies with blue confirmation signs and green turn arrows or decision panels, color for all panels in a blade assembly shall be blue, with brown saved for DCR. Pointed blades should be 30” long and 8” tall. Through destinations may be indicated with 8”x24” rectangular panels with arrow symbols.

Font, legend height, multi-destination listings, symbols, branding, and vertical and lateral clearances shall meet the requirements set in Chapters 6 and 7 of this Guide. Pointed ends of blades shall be rounded to prevent injury.

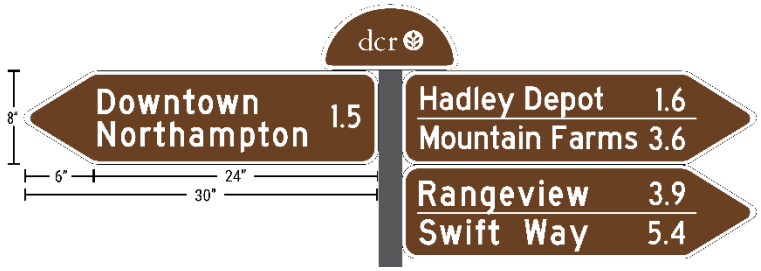

Figure 17. The 8” panel height accommodates two lines for one destination or two separate destination lines in each panel

Confirmation logos and user symbols, if used, should appear in enhancement markers at the tops of assemblies with multiple blades.

Sign faces must be visible to riders on all approaches. Consider whether blade panels should be single- or double-sided and whether blades should be aligned parallel and/or perpendicular to each other per location.

5.4.2 Placement

Blade signs used for route turns should follow the same placement standards as described in 5.3.

If blade assemblies are meant to confer decision points at road crossings, consider whether signs will be readable from approaches on both sides of the road and place one or more assemblies either in advance or directly at crossings. Where blade assemblies are used at path junctions, place directly at the junction for visibility from all approaches.

Avoid placing single assemblies in the middle of large medians or bike roundabouts where they are not legible from all approaches. More than one assembly may be needed to address different approaches to these areas.

Depending on mounting system and placement, blade signs may be pointed in the exact direction of their route, but ensure that angled signs will be visible upon approach from all necessary directions.

5.5 STREET NAME SIGNS

Figure 18. Size street name signs for shared use paths at 6 inches in height

Street name signs help people on bikes orient themselves and stay aware of their location along a route. Municipalities should ensure that street names are visible to people on bikes. Use street name signs:

- At intersections where roadway street names either do not exist or are not visible to trail users.
- At midblock crossings.
- Overhead where people on bikes follow an underpass beneath a roadway.

Figure 19. Overhead Street Name sign on Norwottuck Branch Rail Trail

Also consider that signs identifying a trail may be posted overhead, such as on bridge, so that it is visible either to riders elsewhere on the trail or to drivers in the roadway. This helps establish the presence of the bike route.

5.5.1 Style

Street name signs or trail name signs meant to be read by drivers shall conform to all formatting, color, and legend height standards set within the MUTCD. For street name signs targeted toward path users only, street name signs shall be 6” inches in height and composed of white letters on green backgrounds with or without white borders. Street name signs on DCR trails are an exception and may include brown backgrounds. Lettering shall be composed of initial upper-case letters at least 4 inches in height followed by 3-inch lower-case letters.

As per the MUTCD, street name signs may be mounted over regulatory STOP or YIELD signs.

Street name signs may be posted overhead where people on bikes ride underneath a roadway. Consider the mounting height and whether larger lettering should be used to ensure legibility of an overhead sign.

Street name signs on shared use paths may incorporate pictographs as defined by the MUTCD. The height of the pictograph shall not exceed the height of the upper-case lettering on the sign. The pictograph should be placed to the left of the street name. Do not use the bicyclist or bicycle symbol on street name signs.

5.5.2 Placement

Street names shall be visible to people on all path approaches to a roadway. If one double-sided street name sign is visible to trail users approaching a crossing from both sides of a roadway, only one street name sign needs to be placed. Otherwise, place street name signs on both sides of the crossing.

If street name signs are placed on a structure overhead, ensure visibility to riders approaching from both directions.

5.6 SUPPLEMENTAL SIGNAGE

Map and information signs, entry signs, gateway markers, mile markers, and pavement markings are all part of high-comfort wayfinding systems. These supplemental forms of wayfinding are often used to reinforce the presence, character, or brand of paths while providing orientation help to viewers. In doing so, supplemental signs work as and can often replace confirmation signage to help minimize clutter.

MassDOT sets no standards for supplemental wayfinding signage but is providing limited best practice guidance to make supplemental signage more accessible to all. Supplemental signage on Department of Conservation and Recreation (DCR) property is subject to the standards set forth within the DCR Graphic Standards Manual. This section does not address rules signs and general trail information sign content.

5.6.1 Map & Information Signs

Figure 20. Map kiosk on the Clipper City Rail Trail

Map and information kiosks, called Welcome Waysides by DCR, can be located at trailheads, where regionally significant bikeways intersect, at points of interest, parks or locations where important features are nearby but not on a trail. People are accustomed to reading maps with north oriented at the top, so attempt to place map panels so that they will be read by people facing as close to north as possible.

Trailhead facilities built with federal funds shall include information on the length of the trail or trail segment, surface type, typical and minimum trail width, typical and minimum running slope, and typical and minimum cross slopes per the Americans with Disabilities Act (ADA).

Place maps off the trail so people do not block the path while viewing. All parts of the map should maintain at least 2’ of clearance from paths per ADA guidelines. Map kiosks should be installed on firm and stable surfaces to be accessible to people of all abilities. All sides with information should be wheelchair accessible. Provide minimum accessible width per ADA guidelines.

Use simple, high contrast graphics with few layers to make maps more legible. Good references for kiosk map design include the National Park Service’s *Wayside Map Standards,* and Colorbrewer 2.0, an online resource that helps choose map color palettes that can be read by people who are colorblind.

Mount map information so all content is between 2 and 6 feet off the ground. The legend and any important information should be close to the eye level of a person in a wheelchair, so somewhere nearer to the bottom of the map. Where feasible, use larger fonts (often at least 24 point, font-depending) so that maps can be read from 2-3 feet away.

Figure 21. Granite mile marker on the Assabet River Trail

5.6.2 Mile Markers

Mile markers aid people tracking their travel distance or communicating with emergency services. Markers may be vertical posts or path inlays. At least 2’ of horizontal clearance should be maintained between vertical mile markers and paths, and path inlays should not change the surface level more than ¼” per ADA standards. Mile marker materials may vary, but in all designs the legibility of mileage information is key. A minimum of 2” text should always be maintained. The design of mile markers should consider potential expansion of a trail network to allow for re-numbering.

5.6.3 Gateway Signage

Gateway signage helps people recognize their destination. Where many entries to trails are nondescript, gateway signs convey welcome and define an identity for a site or route. Materials vary widely, though granite markers are often seen at trail entries in Massachusetts. When designing gateway signage, consider the intended viewer for sign information when determining size and position.

Figure 22. (Far Left) Granite gateway marker on the Norwottuck Branch Rail Trail

Figure 23. (Left) Granite gateway marker on the Tri-Community Greenway

5.6.4 Pavement Markings

Figure 24. Shared-lane markings may be used on bike boulevards

Pavement markings can supplement wayfinding signs by helping people navigate difficult route segments and enforcing trail identity. They can be used to instruct people on bikes to use sidewalks at gaps in high-comfort routes. They are also useful for cautioning drivers that people on bikes may be present on designated bike boulevards.

Shared-lane markings (SLMs) may be used per the MUTCD on bike boulevards. SLMs cue people on bikes where to ride on the street while alerting drivers where to expect bicyclists. When used in a series, SLMs can be used to help guide people on bikes through a network of low-traffic streets. Do not use SLMs on paths, separated bike lanes, or sidewalks. The MUTCD does not allow shared lane markings to be adapted with turned chevrons or other symbols.

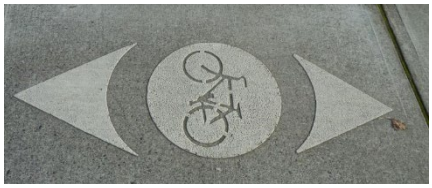

Figure 25. Bike dot (bike zone marking)

Bike dots, or bike zone markings, are an increasingly popular addition to wayfinding systems. Bike dots incorporate a bicycle symbol with arrows that signify the direction of a route. They are a means to aid people on bikes through portions of a route that would otherwise be unclear, such as where riders need to use sidewalks temporarily between path segments. Bike dots have not been sanctioned by the MUTCD and shall be used off-road only. When designing, keep symbols and colors simple and consistent.

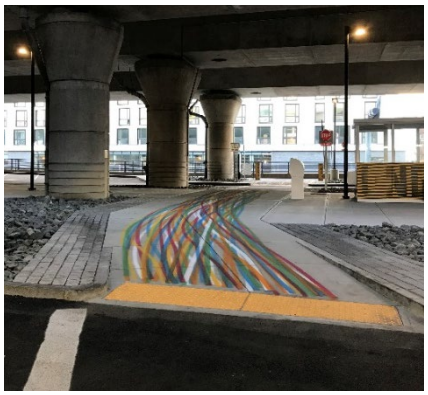

Figure 26. The Ink Block Underground painting leads trail users under Interstate 93

Besides bike dots, pavement markings that incorporate unique paint or other pavement patterns may be used on sidewalks, separated bike lanes, and shared use paths to assist in wayfinding while enforcing trail identity. Artful markings could be developed through community engagement programs for individual projects. Consider positioning and size to ensure marking visibility. Do not use creative markings in the roadway.

6 SIGN DESIGN FOR LEGIBILITY AND VISIBILITY

Keep It Simple. Be Consistent and Predictable. Help People Maintain Motion. The Core Principles for this guide are instrumental in the design and placement of signs. Signs must be visible and clearly readable at a distance for wayfinding systems to work. Sign size, color, contrast, retroreflectivity, and branding all affect legibility and visibility. Font and text layout, symbols, and naming conventions also affect legibility of sign information. The features are all covered in this section.

6.1 SIGN ASSEMBLY SIZE

Three principle sign assembly widths shall be allowed, with the decision sign as the width determiner:

30” – this size should be prioritized for use in all bike facility contexts as the width allows most destination names to be listed on one line while providing room for user symbols and logos

- **24” –** this size should be prioritized for use in all bike facility contexts where sidewalk or shoulder space is limited or where other vertical elements may block a 30” sign
- **20” –** this size may be used on a limited basis in urban street networks where space is restricted. Potential applications are in areas with very narrow sidewalks and minimal building setbacks, such as historic downtowns or quiet bike boulevards.

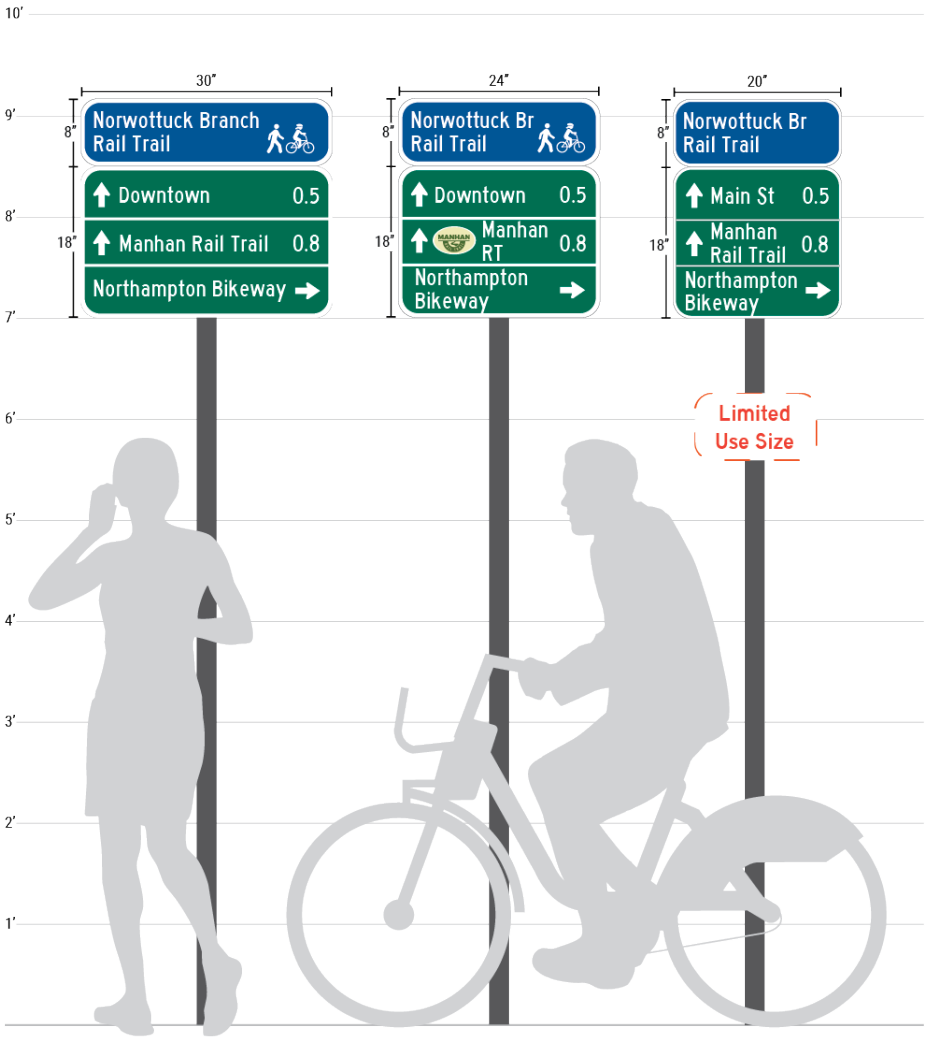

Figure 27. Signs in 30", 24", and 20" width at required clearance heights (see “Sign Installation and Placement”

6.2 COLORS

The following guidance is provided for wayfinding sign colors to increase consistency while providing flexibility for expression of municipal and/or route identity.

6.2.1 Sign Background Colors

The following are colors to be used on sign backgrounds except for enhancement markers in certain cases. Colors are expressed with Pantone numbers as identified in the MUTCD. Sign manufacturers should match these colors as closely as possible.

Green - Pantone 342 Following the MUTCD, the backgrounds of turn signs and legends of all decision signs shall be green.

Brown - Pantone 469 Brown is reserved to be used solely by the Department of Conservation and Recreation and the National Park Service and may appear on either confirmation/identity or decision signage.

Blue - Pantone 294 Blue shall be used on backgrounds for identity/confirmation signs and enhancement markers. This color was elected for this purpose over green to draw the eye to a sign assembly where green may disappear among vehicular guide signage and vegetation. While blue is often associated with service and tourist information and parking for people with disabilities, MassDOT feels this limited use of blue in wayfinding does not detract from other signage types.

6.2.2 Font & Border Color

White font and white borders shall be used over top the background colors.

6.2.3 Restricted Colors

Due to their other MUTCD designations, the following colors and their similar or fluorescent variants, are expressly prohibited from use on wayfinding backgrounds. The colors are listed with their Pantone numbers:

Red – 187 | Orange – 152 | Yellow – 116

Purple – 259 | Yellow-Green – 382 | Pink - 198

These colors may be as part of logos and seals as long as the logo or seal cannot be confused for a regulatory or warning message.

6.2.4 Enhancement Marker and Logo Colors

Logos and seals may incorporate a mix of colors, but designers are encouraged to minimize color count for better legibility. Enhancement marker background colors must remain blue (or brown for DCR). Existing branded routes must adapt logos where needed so they contrast against the blue background and are legible.

6.3 CONTRAST

For all sign legends, white letters shall be used on dark green, blue, or brown backgrounds. Enhancement marker logos and seals are permitted to contain a mix of light and dark colors but must contrast against backgrounds.

6.4 RETROREFLECTIVITY

As required by the MUTCD, all wayfinding signs for all bike facilities, including shared use paths, shall be retroreflective. This includes enhancement markers, supplemental street name signs, and pavement markings. It does not include other supplemental signage. Community Wayfinding standards state that pedestrian wayfinding signs do not need to be retro-reflectorized, but all the facilities in this Guide are considered by MassDOT to be separate from pedestrian-only wayfinding and covered by standards for bike facilities.

6.5 BRANDING AND ENHANCEMENT MARKERS

Figure 28. Decision sign with branded confirmation sign/enhancement marker and East Coast Greenway sign provided below in separate panel

Identity features help route signage within local context and differentiate between paths. Some linear routes are already branded in Massachusetts. As urban cycling continues to develop, MassDOT expects that branding may also be desired for whole high-comfort networks. Considering the above, the following are standards for adding branded content to signs.

6.5.1 Route Names

If the name of a route is usually expressed in a certain font in lieu of an official logo, that font is permitted to be used in the enhancement sign at the top of a sign assembly, as in Figure 28. Legends must be a minimum of 2" tall, with larger size preferred. Abbreviations to route names may be made as needed according to the table under *6.7.3 Abbreviations.*

6.5.2 Logos and Logo Hierarchy

Where a route has an official logo, that logo may be used within sign assemblies according to the rules below. In all cases, a logo shall not appear as the dominate feature of a decision sign, as the directional information has priority.

Logos for Local Linear Routes (Shared Use Paths/Sidepaths)

Logos may be used in confirmation sign panels either with user symbols if visible to drivers or without user symbols where routes are well separated from roadways. Where linear routes run adjacent to roads and signs would be visible to drivers, logos should appear with bicyclist symbols.

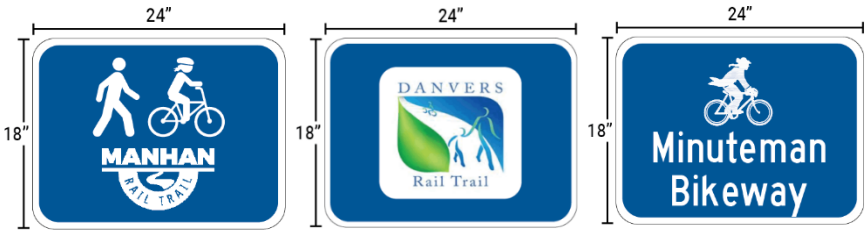

Figure 29. Options for 18"x24" branded confirmation signs

In 18" x 24" sign formats, logos should be center aligned when used alone or with a separate route name legend. If used near roadways, logos should appear under the bicyclist symbol (and pedestrian symbol if used).

Figure 30. Options for rectangular branded confirmation/enhancement markers

For rectangular confirmation panels (semi-circular described below), logos should either be center-aligned if alone or aligned to either the left or right of the sign in balance with route name and user symbol content. Again, near roadways, the bicyclist symbol (and pedestrian symbol if used) should appear within the confirmation area. Where user symbols are included, they should appear to the right of route names.

Figure 31. Options for semicircular branded confirmation/enhancement markers

As part of semicircular enhancement markers, logos should be center-aligned if used alone or else positioned to the left or right of the route name. This enhancement marker shape may not be a good option adjacent to roadways where user symbols cannot be incorporated within the restrictive format. It is possible, however, to incorporate user symbols in semicircular markers alone.

Figure 32. The East Coast Greenway logo appears below decision signage

Regional/State/National Linear Route Logos

Local linear routes are often part of a larger named trail work. The Mass Central Rail Trail includes multiple branch trails. The East Coast Greenway includes both named local and regional routes plus many unnamed on-street segments. Larger parent routes with established branding should be incorporated into wayfinding sign assemblies. Unless the parent trail is the only name of a trail branch, all parent trail branding shall be provided underneath and in separate panels than the standard sign assembly panels. Parent trail branding may be shown in circular or rectangular panels that do not dominate the assembly in size, color, or graphics.

U.S. Bicycle Routes

On highway facilities without high-comfort routes, the standard U.S. Bicycle Route (M1-9) sign shall be used on all established U.S. routes. However, it is MassDOT's goal to establish future U.S. numbered routes on high-comfort facilities, where signs shall conform to the standards set in this Guide. The M1-9 sign face design shall conform to MUTCD standards if placed beneath decision signage. Sign face drawings for the M1-9 sign may be found in the *MUTCD's Standard Highway Signs, 2004 Edition* or in *MassDOT Engineering Directive E-15-001.* Route numbers may also be listed on a destination line within decision signage or as part of a confirmation/identification sign at the top of an assembly.

Figure 33. US and State Route numbering on decision sign

State Numbered Bicycle Routes

On highway facilities without high-comfort routes, the standard Bicycle Route (M1-8) sign shall be used on all state numbered bicycle routes as guided in Directive E-15-001. However, it is MassDOT's goal to establish any future state numbered routes on high-comfort facilities, where signs shall conform to the standards set in this Guide. Route numbers may be listed on a destination line within decision signage or as part of a confirmation/identification sign at the top of an assembly.

Bike Boulevard Networks (Neighborways, Neighborhood Greenways)

Signage is needed to designate routes as bike boulevards. Sign bike boulevards with confirmation panels/markers to clarify their inclusion either in a linear route or bike boulevard network. As signs on bike boulevards will be visible to drivers, signs shall include either a bicyclist symbol or logo that includes a person on a bike and which follows standards for color and legend height set in sections 6.2 and 6.6.

6.5.3 Logo Background Colors

See *Enhancement Marker and Logo Colors* under 6.2 COLORS.

6.6 HISTORIC-STYLE SIGNAGE

Many communities have invested much time and hard-earned funding to maintain the historic character of their town/city centers, cultural sites, and open spaces. Maintaining historic character is not a valid reason for avoiding design treatments that make streets and routes safer and more comfortable for people on bikes. However, MassDOT recognizes the value that historic character can lend to community identity, civic pride, and tourism-building. For this reason, MassDOT will allow some alterations to the standard wayfinding family detailed in sections 5.1 – 5.4 for purposes of perpetuating a historic style or brand.

Alterations generally include font, color, and sign layout. Historic-style wayfinding signage plans must be submitted for review and approval by MassDOT Highway Division before installation.

Standards to Follow

- At all times, historic-style signage shall respect the *Core Wayfinding Principles* set forth at the beginning of this Guide.
- Sign legend height and placement for visibility and vertical and horizontal clearance shall follow the standards set forth in Chapters 6 and 7.
- Signs shall not incorporate branding in a manner that conflicts with the standards of *6.5 Branding and Enhancement Markers.*
- As follows *6.11.2 User Symbols*, the bicyclist or bicycle symbol shall be incorporated where a sign might be otherwise be confused as meant for a driver.
- Signs shall be retroreflective to ensure evening visibility whether on paths or roadways.

Permitted Alterations

- Sign background colors may be adapted to include alternate shades of blue for confirmation signs and blades; alternate shades of green for turn arrows and decision panels. Brown is again reserved for DCR. The content of *6.2.3 Restricted Colors* still applies, and high contrast between white font and background must be maintained.
- Font style may diverge from the standards provided in *6.6.1 Font Style and Size*. However, fonts must be demonstrated to MassDOT to be as legible as the standard. Cursive font is not permissible.

Also consider that historic-style wayfinding can be established through material choices, through supplemental signs such as map kiosks and granite or other gateway markers, and through historic-style posts.

6.7 FONTS AND SIGN LAYOUT

Font style, size and text layout on a sign must reflect that people biking regularly move at speeds of 10+ miles per hour and have limited time to spot and read signs. Fonts and the layout of sign elements should be composed so that a visual balance is achieved, and the sign is clean and legible.

6.7.1 Font Style and Size

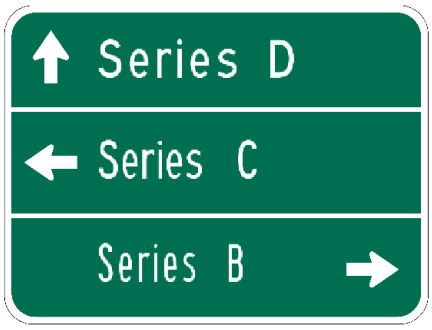

Figure 34. MUTCD Standard Alphabets Series fonts

Font style as part of decision legends or where used to identify a route name shall be consistent with MUTCD Standard Alphabets Series font specifications. Series D is preferred, then Series C, followed by Series B. Other Series fonts shall not be used.

Series B should be used as a last resort for long route names. Sign size should be increased and abbreviations and symbols used before Series B font is implemented.

Clearview font is not permitted for use on decision sign legends. It is generally prohibited from use on confirmation/identity signs unless commonly recognized as part of a route's branding.

For all standard family wayfinding sign content, destinations shall begin with upper-case letters followed by lower case (sentence case). This does not apply to supplemental wayfinding, though the legibility of fonts and cases should be considered in supplemental sign design.

6.7.2 Legend Alignment

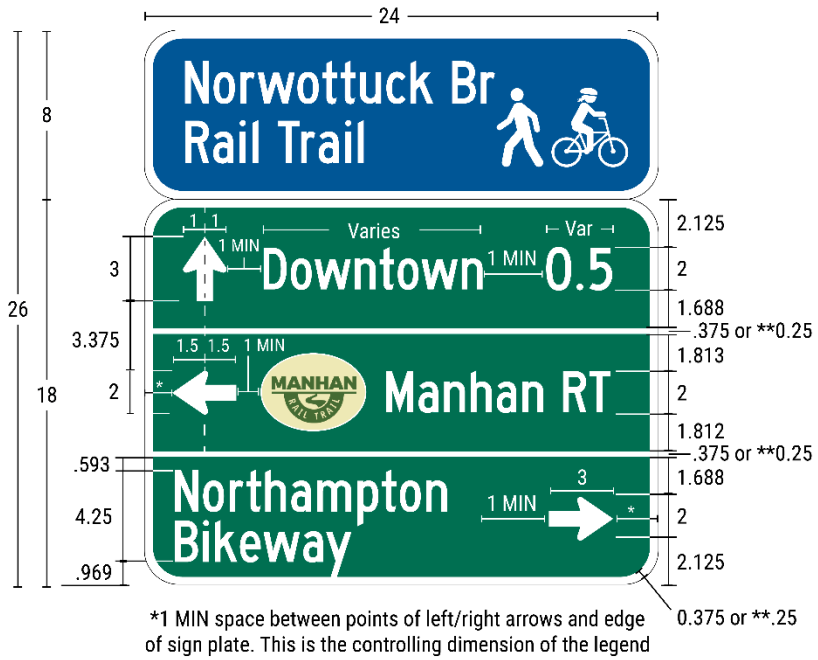

Figure 35. Recommended spacing between text and borders, though sign size may vary according to the sign types previously described.

A legend is all the text within a sign. Legend alignment varies with sign type and content:

- Standalone confirmation sign legends should be center aligned.
- Confirmation sign legends above decision signs should be left-aligned.
- On decision signs with one destination listed, single- and multi-line legends should be left aligned.
- On decision signs with more than one destination listed, all legends should be left aligned.

6.7.3 Legend Height

Legend height for upper-case letters on any decision sign or in route names on confirmation signs shall be 2" tall minimum, except where route names are incorporated into logos. Distance

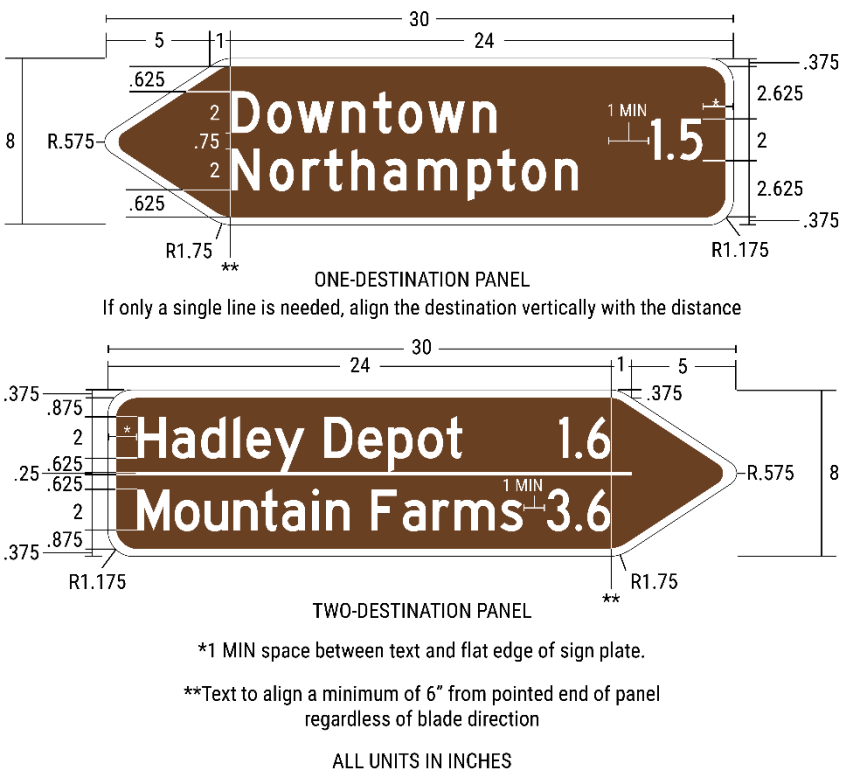

Figure 36. Recommended spacing for both one-destination and two-destination blade signs

numerals shall also be 2" minimum. This applies to 20" wide signs. Supplemental sign font sizes may vary (see 5.4 Supplemental Signage).

In contrast with the MUTCD, MassDOT will allow the use of logos within destination legends. Logos may not be shown on their own. They may be used to the left of the route names and their height shall not exceed two times the height of the uppercase characters of the principal legend.

Borders and spacing should follow the dimensions provided within the sign examples in Figures 35 and 36, regardless of sign size, or according to the 2012 MUTCD Supplement of *Standard Highway Signs.*

6.7.4 Bike Roundabout Signage

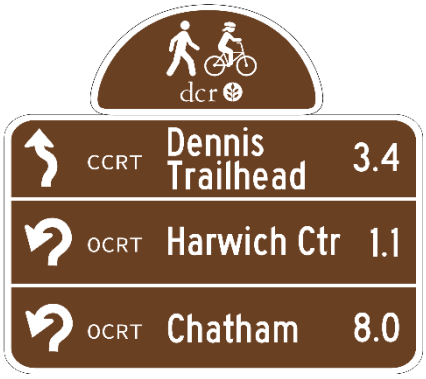

Figure 37. DCR-branded example decision sign for bike roundabout on the Cape Cod and Old Colony rail trails.

Where complex movements are required at bike roundabouts, communities may format decision signage to include special fishhook arrows that indicate paths of travel around the roundabout.

Roundabout signage should otherwise follow the color and branding rules established this Guide.

Place roundabout signage on each approach so that destinations off the other approaches are clear.

6.8 NUMBERING, NAMING, AND SYMBOL CONVENTIONS

Figure 38. US Route on decision sign

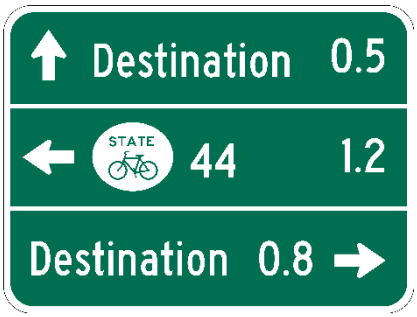

Figure 39. State route on decision sign

This section covers how numbering, naming, including abbreviations, and symbols should be designed into sign layouts. Consult the *Planning Basics* section for how route numbers and names are planned.

6.8.1 Numbering and Naming

Deviating from Directive E-15-001, named bicycle routes on high-comfort wayfinding signs shall generally list their full names, with commonly understood abbreviations for subjects within a name (i.e. rail trail, trail, river) applied per the *Abbreviations* guidance below. If a named route has a commonly used 1-3 letter abbreviation and that abbreviation is approved by the MassDOT Office of Transportation Planning, the abbreviation may replace the full name on high-comfort wayfinding where sign space is limited.

Any US or State Numbered Bicycle Route shall have its number shown either within the standard sign family for high-comfort sign types or as a separate sign following MUTCD standards at the bottom of the assembly. If shown within a confirmation or decision sign, the US or State number should be displayed per Figures 38 and 39 at left.

6.8.2 Long Destination Names

Long route and destination names are problematic for bike wayfinding signage due to space constraints. MassDOT encourages sign designers to address name listing issues on decision and confirmation signs by working through the following steps in order of 1 to 6. Consistency is key, so once a pattern for handling long destination names is established, stick with it on signs throughout a route.

1. Increase the width of the sign assembly to 30” where feasible. Reformat half circle confirmation signs to rectangular if needed.
2. If destination lengths are within .2 miles, remove destination numerals.
3. Split names between two lines fitting within one destination area. Both lines shall be aligned left.
4. Abbreviate parts of names that are listed within the table under *Section 6.7.3 Abbreviations.* Abbreviate the entire name if approved by the Office of Transportation Planning. Consider using a well-known nickname or acronym for the route instead.
5. Remove symbols on decision signs and/or the pedestrian symbol on confirmation signs.
6. Switch text to Series C followed by Series B font.

Legends shall not be made smaller than 2” to resolve issues arising due to word length.

6.8.3 Abbreviations

Common abbreviations may be used for places and as part of route names where sign space is limited. Abbreviations should not be followed by periods, as in Figure 37. The abbreviations listed in the table below are approved for use. Other permitted abbreviations for route names may be found in the MUTCD or as part of Street Suffix Abbreviations listed online by the US Postal Service. For abbreviations that are not established by these sources, seek permission for use from the MassDOT Office of Transportation Planning.

6.9 Place/Feature	6.10 Abbreviation	6.11 Place/Feature	6.12 Abbreviation
Avenue	Ave, Av	**Middle School**	MS
Beach	Bch	**Miles(s)**	Mi
Bicycle	Bike	**Mount**	Mt
Boulevard	Blvd	**Mountain**	Mtn
Branch	Brg	**Museum**	Mus
Bridge	Brdg	**National**	Natl
Brook	Brk	**Neighborhood**	Nbhd
Center	Ctr	**North / Northwest / Northeast**	N / NW / NE (with or without periods)
Circle	Cir	**Park**	Pk
Community	Comm	**Parkway**	Pkwy
County	Cty	**Path**	Path
Court	Ct	**Pedestrian**	Ped
Creek	Crk	**Place**	Pl
District	Distr	**Rail Trail**	RT
Downtown	Dtwn	**Recreational**	Rec
Drive	Dr	**River**	Riv
East	E	**Road**	Rd
Elementary School	Elem	**South / Southwest / Southeast**	S / SW / SE (with or without periods)
Garden / Gardens	Gdn / Gdns	**State**	State
Harbor	Hbr	**Station**	Sta
High School	HS	**Stream**	Strm
Highway	Hwy	**Street**	St
Hospital	Hosp	**Terrace**	Ter
Information	Info	**Trail**	Trl
Lake	Lk	**US Numbered Route**	US
Lane	Ln	**Veteran(s)**	Vet
Marina	Mar	**Village**	Vlg
Memorial	Mem	**West**	W

Table 1. Abbreviations for common destinations

6.12.1 Service and Destination Symbols

Symbols provide instant communication that overcomes language barriers. MassDOT encourages the use of symbols to reference transit centers, activities at a destination, or to describe amenities such as food and restrooms.

Figure 40. Service symbols on decision sign.

Per the MUTCD, if a symbol is used, its height shall not exceed two times the height of the upper-case letters of the destination legend. The outer edges of symbols should be spaced a minimum of 1” from adjacent sign content.

International symbols shall be used as guided in MUTCD *Chapter 2M. Recreational and Cultural Interest Area Signs* and in the 2016 Bureau of Land Management *National Sign Handbook* (H-9130-1). MassDOT requires that permission is sought before using any symbols not recognized on the international symbols list within the *National Sign Handbook*. Symbols for use on gateway, map, and other supplemental or non-wayfinding trail signage do not require permission for use.

Due to the notability of the MBTA logo, MassDOT is permitting the use of the “T” symbol on high-comfort wayfinding signage. MUTCD guidance still applies for sizing and color standards in the use of this logo.

Figure 41. MBTA “T” logo

The following are considerations for use of symbols in wayfinding:

- Business logos, commercial graphics, or other forms of advertising shall not be used on wayfinding.
- Except for hospital symbols, do not include symbols for services that are more than a mile away.
- Do not use both words and symbols.
- Symbols do not include route logos or municipal seals.

6.12.2 User Symbols

Confirmation signs should display the MUTCD bicycle symbol or a symbol for a person biking (bicyclist symbol) on bikeways adjacent to roadways to designate the space used by people on bikes. Where space allows, pedestrian and bicyclist symbols should be shown together where a sign is meant to be viewed by both users.

Figure 42. The approved symbol for expressing use of a route by people on bikes. This shall replace the MUTCD bike symbol.

MassDOT seeks to recognize that bikes are ridden by human beings whose safety is important to ensure. The symbol at left should replace the MUTCD rider-less bicycle symbol in Massachusetts. Helmets and protective gear are recommended for all people biking and are required for children under 16 years of age. However, the MassDOT bicyclist symbol does not enforce a rule for helmet use.

The bicyclist symbol should appear within standalone confirmation signs or within confirmation signs/enhancement markers at the top of decision assemblies.

Where confirmation signs do not show a bicyclist symbol and the sign assembly is located adjacent to a roadway, the MUTCD standard bicycle symbol shall be added to the decision panel per MUTCD guidelines on bicycle destination signs. Recognize that this will increase panel width.

Figure 43. The approved pedestrian symbol for use in Massachusetts

The pedestrian symbol shown in Figure 43 is used on MUTCD RS-122/123 signs. This symbol is preferred for use on bike wayfinding signs in Massachusetts as its rounded features more closely match the person riding a bike in the bicyclist symbol. This pedestrian symbol should be shown as much as possible on signs meant for both people biking and pedestrians. The pedestrian symbol is intended as a stand-in for multiple modes – skateboarders, scooter riders, among others – as showing all modes would decrease sign legibility. Supplemental signs for shared use and side paths may be designed to show other modes.

Bicyclist and pedestrian symbols should appear at 3” tall minimum when used within confirmation panels. This does not apply to the MUTCD standard bicycle symbol in decision panels, where the symbol should be sized according to MUTCD guidelines.

Pedestrian symbols shall never be placed within decision sign panels. If used, they shall be used within confirmation signs, grouped and to the left of the bicyclist symbol. Both the pedestrian and the person biking should face the same direction, usually to the right. The symbols may face left or opposite of each other if stylized as part of a brand. In this case, the symbols shall remain legible.

7 SIGN INSTALLATION & PLACEMENT

For approved bicycle routes on State Highway, MassDOT will work with a contractor prequalified for signage work to install appropriate bicycle route signage, and MassDOT will maintain the signage after installation. For bicycle routes on Non-State Highway, MassDOT may install bicycle route signage; otherwise, the local jurisdiction is responsible for installation using a contractor prequalified for signage work by MassDOT. After installation, the local jurisdiction is responsible for maintenance of any bicycle route signage on Non-State Highway roads and paths.

Per the MUTCD, do not place guide signs where they obstruct visibility of warning or regulatory signs. Bicycle guide signage should usually be installed independently on a separate signpost. Additionally, the ruling set forth in MassDOT Engineering Directive E-15-001 stating that bike route (guide) signage shall never be combined with any warning or regulatory signage is given exception in this Guide. Bike guide signage should never be combined with warning signage and most regulatory signage. However, confirmation signage may be installed above R5-2, R5-3, R5-4, and R5-8 selective exclusion signs if vertical clearance standards are met.

7.1 PLACEMENT FOR VISIBILITY

Wayfinding signs must be visible to be useful.

- Place signage in locations within a bicyclist's normal field of view.
- Avoid placing signage behind tall shrubs and trees with large trunks or low-hanging canopies unlikely to be maintained.
- Do not place wayfinding signage directly behind other types of signage. At least a 20' separation should be maintained. Also, do not place wayfinding signage so that it blocks views of regulatory or warning signage.
- Do not place wayfinding signs that block sightlines of drivers, pedestrians, and people on bikes at intersections.
- Where a guide sign is to share the same post with another route sign, the height of the wayfinding sign shall meet the vertical clearance standards established below.

7.2 VERTICAL AND LATERAL CLEARANCE

Vertical clearances should be measured from the top of the traveled facility (i.e., shoulder, bike lane, separated bikeway, etc.) to the bottom of the lowest sign in the assembly, unless otherwise noted. Lateral clearances shall always be measured from the edge of pavement or curb line. The following vertical and lateral clearance standards shall be met for all installations:

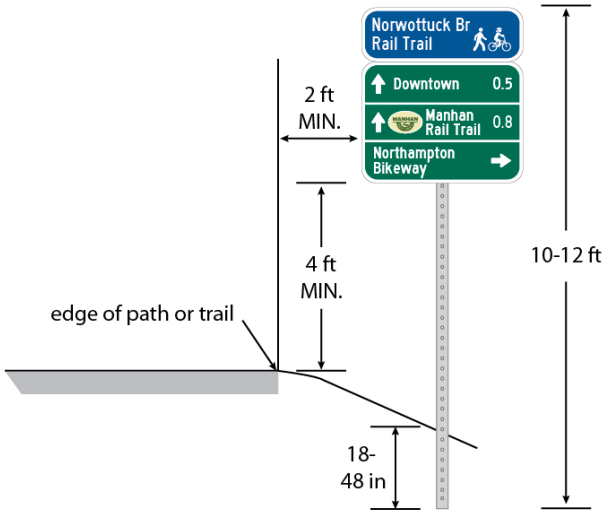

Figure 45. Clearances when installed adjacent to a shared use path or side path.

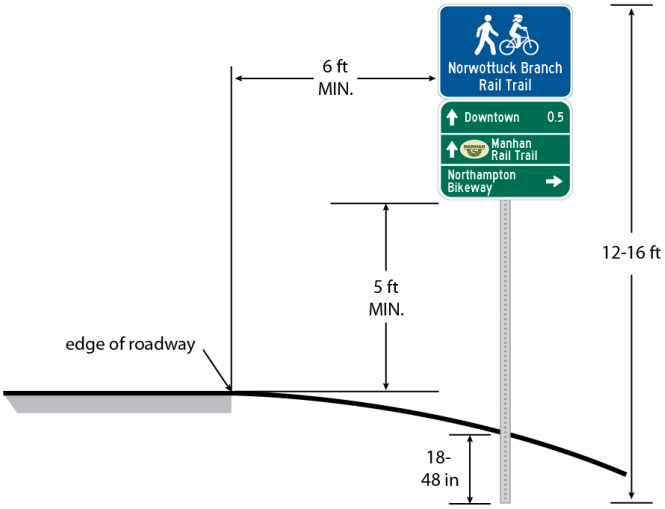

Figure 44. Clearances when installed adjacent to a facility used by motor vehicles. Except when protected by a barrier, the minimum lateral clearance shall be 6 feet when installed adjacent to a road facility with no curb.

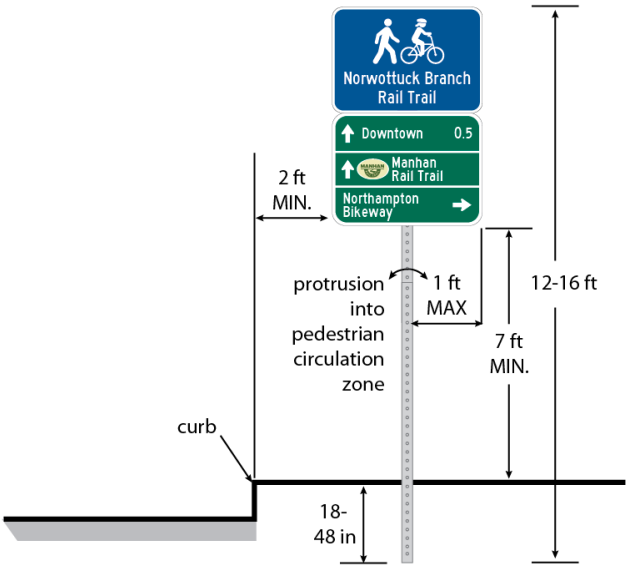

Figure 46. Clearances when installed on sidewalks or other accessible pedestrian areas. The minimum lateral clearance shall be 2 feet when the bicycle route is separated from pedestrians by a curb.

7.3 PLACEMENT SCENARIOS

Typical scenarios are shown on the following pages to illustrate how sign assemblies may be placed in varying contexts. Consider that each scenario could have multiple signage solutions. The scenarios presented below are not required treatments.

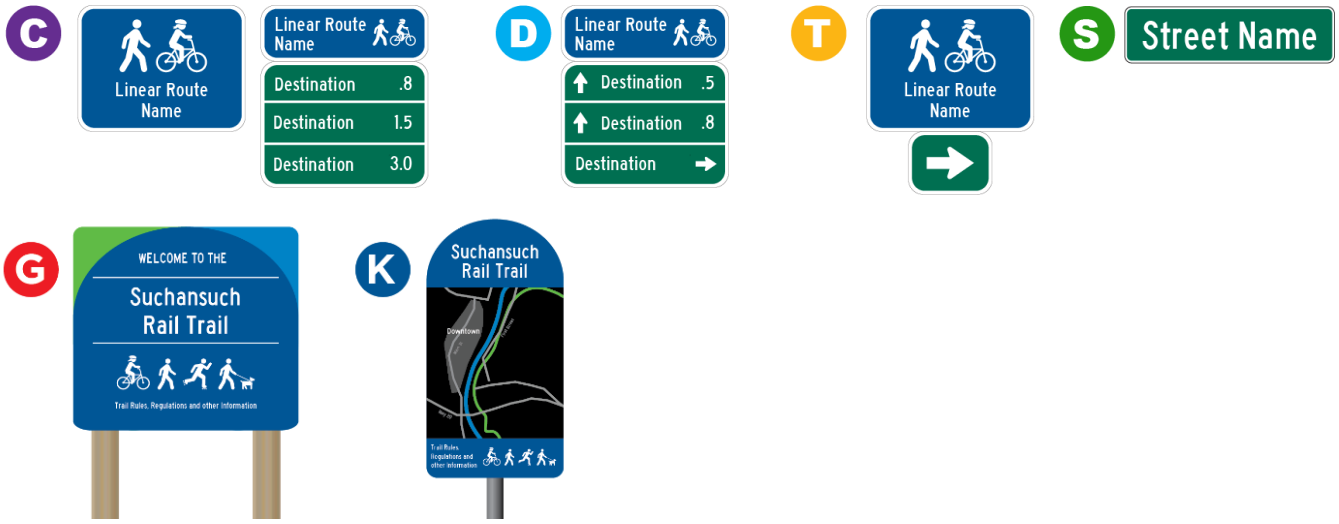

Figure 47. "C" - Confirmation/identification signs; "D" – Decision sign; "T" – Turn sign; "S" – Street sign; "G" – Gateway sign; "K" – Map kiosk

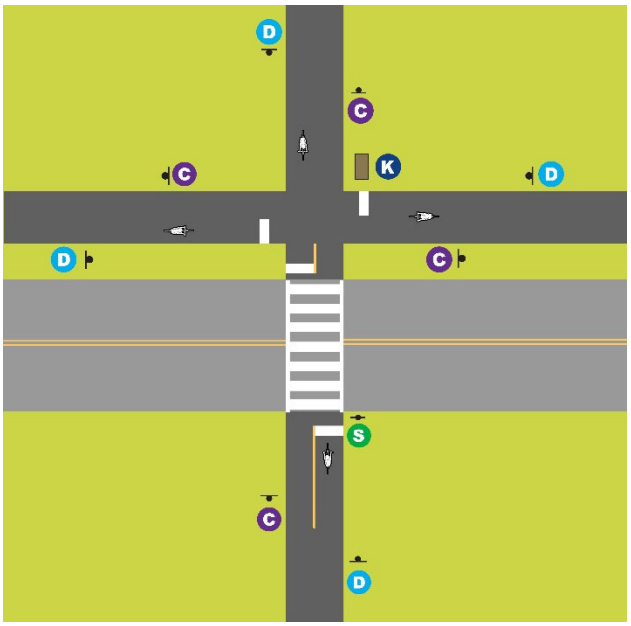

Figure 48.

PATH JUNCTION & MIDBLOCK CROSSING

In this scenario a shared use path crosses a roadway to intersect with a sidepath. A street name sign is provided for orientation at the crossing. Decision signs are placed in advance of the trail junction and crossing to aid path users approaching in all directions. Optional confirmation signs help assure users of being on the right route. Often located at trail junctions, a supplemental map kiosk can be provide much helpful information for trail use

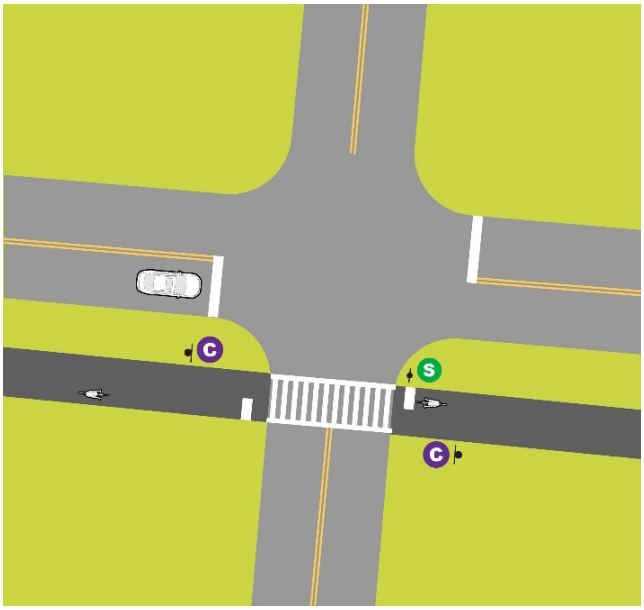

Figure 49.

SIDEPATH CROSSES INTERSECTION

Multiple signing options exist in this common scenario. A street name sign is placed at the trail when the intersection street name signs are not visible to path users. The street name sign, if branded for the path, may be the only sign needed. If desired, confirmation signs may be used to identify the path to both people on bikes and to passing drivers.

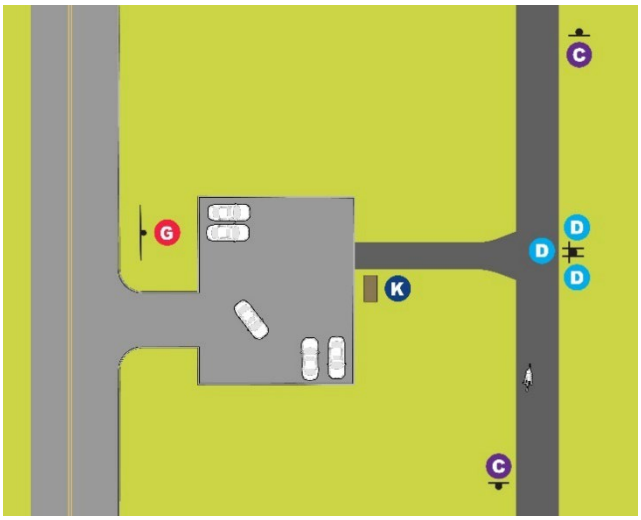

Figure 52.

TRAILHEAD WITH SPUR TO TRAIL

This scenario includes gateway and map kiosk supplemental signage to establish the presence of the trail and to provide navigational information. Decision signs at the junction of the spur and main path will help people on bikes determine their route from any approach. Decision signs with confirmation panels on top will help assure path users approaching from north or south that they continue to follow the correct route.

Optionally, standalone confirmation signs may be added to ensure path users that they made the right decision in turning onto their route.

Figure 50.

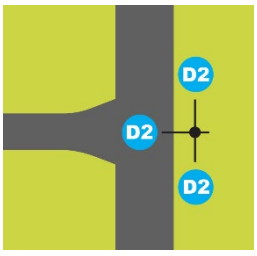

Figure 51.

Blade signs may be substituted for rectangular decision and confirmation signs. Following the example at left (Figures 51 and 52), a confirmation sign is used at the top to assure people who are already on the main trail that should continue through to stay on their route. The confirmation sign could be turned toward people on the spur to let them know they have reached the trail.

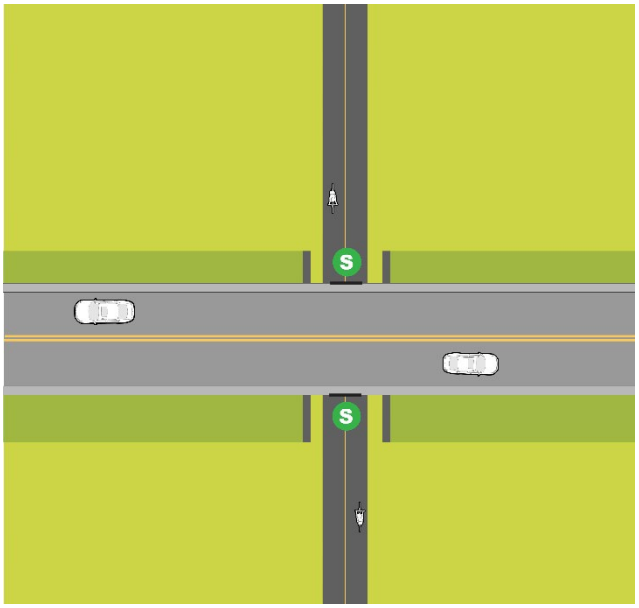

Figure 53.

TRAIL UNDERPASS

Street name signs overhead will orient people on bikes passing underneath a roadway.

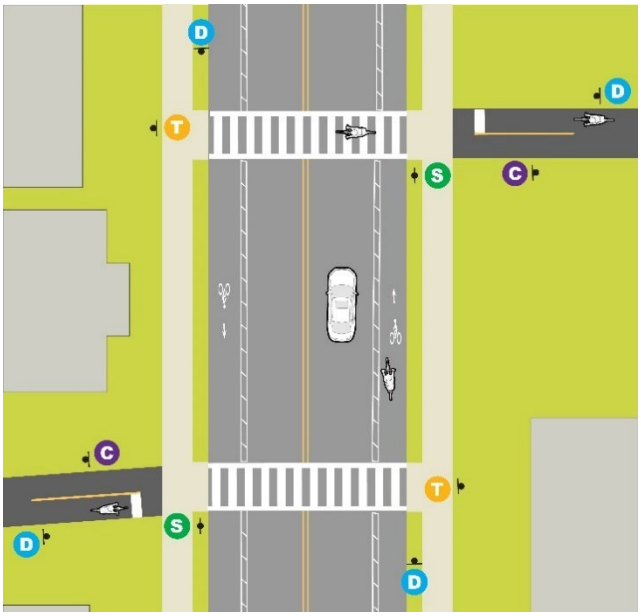

Figure 54.

TRAIL JOGS ACROSS STREET

On-street bike facilities are assumed to connect people on bikes with destinations to the north or south, so decision signage should be provided on all legs to help people navigate. Turn signs at the backs of crosswalks must be visible from across the road and will help show path users where their route continues. Confirmation signs should be included to reassure path users of having reached the correct leg of their path. Street name signs provide extra navigational context or, with route branding, may be used in place of confirmation signs.

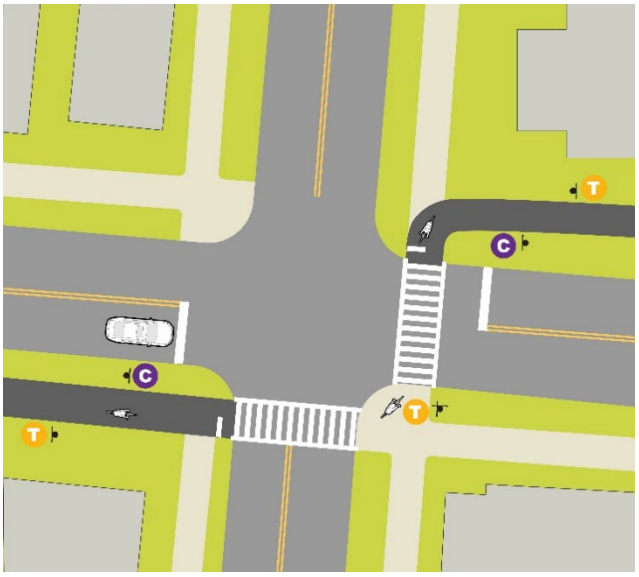

Figure 55.

TRAIL CROSSES TO DIAGONALLY OPPOSITE SIDE OF INTERSECTION

Turn signs are used in this case to guide people through the intersection. The turn signs in advance of the intersection are assumed to have straight arrows that point people across the crosswalk, where additional turn signs let them know where the trail continues. This scenario assumes that visibility across the intersection is low. Otherwise, path users on one corner will likely be able to see the opposite leg of the path. Extra signage may be needed to instruct people on bikes to use crosswalks.

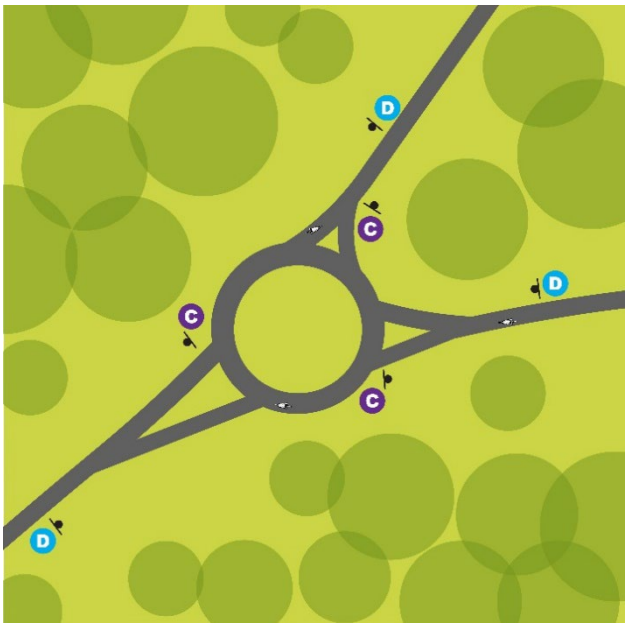

Figure 56.

BIKE ROUNDABOUT

The bike roundabout includes decision signage with unique fishhook arrows on all approaches and confirmation signs on all exits to ensure path users they have made the right decision.

7.4 SIGNING NETWORK GAPS

High-comfort, dedicated bike facilities will not exist from start to finish in and between most municipalities and destinations. In this case, wayfinding project managers must set priorities for wayfinding installation according to their knowledge of planned projects, budgets, and desired outcomes for cycling in their communities. Some suggestions are as follows:

Figure 57. R3-17 sign

- Where a shared use path meets a standard or paint-buffered bike lane that connects within .5 mile or less with another high-comfort segment, consider providing a regulatory R3-17 “BIKE LANE” sign along with decision signage that notes the distance to the destination/next high-comfort route, if it is named. If the original high-comfort route is a separated bike lane, just note the distance to the destination/next high-comfort route.
- Where a high-comfort route stops and meets a road with no bike facilities, but the road has:
    - An unused parking lane
    - A wide, bikeable shoulder
    - Clear sightlines between drivers and people on bikes
    - Low-medium traffic volume
    - And a destination/high-comfort route is available within .2 miles

  Consider providing decision signage that states the distance to the destination/next high-comfort route. Do not lead people on routes where riders’ safety and comfort is in doubt.

Figure 58. D11-1c and M4-1 signs to signal end of route

- Where a high-comfort route ends at a high-traffic location, such as a highway, without comfortable bike facilities, consider providing a D11-1c “[NAMED BIKE ROUTE]” sign plus a M4-1 “END” sign. Use signage to transition users to a sidewalk or another means to exit. If planning a high-comfort route, avoid ending it where no safe facilities exist or can be constructed in the short-term.

7.5 WEBSITES & SUPPLEMENTAL WAYFINDING TECHNOLOGY

Websites, web map services, and tag/code technology may be used to complement and enhance wayfinding systems by assisting in trip planning and awareness raising about the resources along a route. Advocates and municipalities should consider how the following web-based technology can benefit their trails.

Websites: The Commonwealth publishes information online about DCR-owned rail trails and other shared use paths. MassDOT encourages advocates to create websites to garner support and spread information for their trails. Websites can be used to:

- identify routes and make trail maps available interactively and/or for download
- provide information on hours, parking, rules, activities, facilities, services, and accessibility
- identify the advocacy and funding groups supporting trails
- describe segments of trails that are open or in planning or construction
- help potential riders understand what destinations and services they can expect to reach on a trail

Web map services: Municipalities and trail advocacy groups should ensure that trail route data is accurate and complete on popular online platforms, such as Google Maps. Many riders will use these services for trip planning.

Trailhead wayfinding support: At trail access points, consider listing website addresses or providing tag/code technologies on supplemental signs such as map kiosks. These addresses and tags may link to maps, apps, or websites with trail information, updates on trail condition and access, and short-term or special event information. This technology can include Quick Response (QR) codes and Near Field Communication (NFC) chip tags. Custom mobile apps can also be created which riders can download and allow Bluetooth beacons to automatically transmit pre-recorded information to their phones when in-range. This technology is rapidly evolving and should be carefully researched before implementation. Do not use web addresses or tag/code technologies on confirmation, decision, turn, or street name signs.

Establishing the digital presence of a trail is beneficial, but online content requires various levels of management and updating. Additionally, while many riders may follow real-time map directions given by a phone or other GPS-enabled device, many people on bikes prefer to stay disconnected from the internet while riding, and signage ensures that navigational information is available when phone signals are poor. Web-based technology is not a substitute for a well-planned wayfinding sign system.

8 MORE RESOURCES

For more resources on design and planning for bikes in MA, information on existing DCR trails, and how to apply for trails grants in the Commonwealth, check out the following resources:

DCR Greenways and Trails Program

Find DCR Rail Trails and Oher Shared-Use Paths

MassDOT Massachusetts Bicycle Transportation Plan

MassDOT Separated Bike Lane Planning & Design Guide

Interagency MassTrails Program

[i] Lidwell, W., Holden, K., Butler, J., & Elam, K. (2010). Universal principles of design: 125 ways to enhance usability, influence perception, increase appeal, make better design decisions, and teach through design.

[ii] Dill, J., McNeil, N. (2012). Four Types of Cyclists? Examining a Typology to Better Understand Bicycling Behavior and Potential. Transportation Research Board. Bicycles 2013: Planning, Design, Operations, and Infrastructure, 01514640, 129- 138.

THIS PAGE IS INTENTIONALLY LEFT BLANK

DOCUMENT A00820

Massachusetts Department of Transportation
Conditions of Custody

REQUEST FOR RELEASE OF MASSDOT AUTOCAD FILES FORM
(Only to be used following award of contract)

City/Town: LAWRENCE Project File Number: 608930

Contract Number: 128034

Project Description: Lawrence Manchester Rail Corridor (LMRC) Rail Trail

All AutoCAD files are provided solely as a courtesy to facilitate public access to information. MassDOT attempts to provide current and accurate information but cannot guarantee so. MassDOT provides such documents, files or other data "as is" without any warranty of any kind, either expressed or implied, including but not limited to, accuracy, reliability, omissions, completeness and currentness. The Commonwealth of Massachusetts and its Consultants shall not be liable for any claim for damages, including lost profits or other consequential, exemplary, incidental, indirect or special damages, relating in any way to the documents, files or other data accessible from this file, including, but not limited to, claims arising out of or related to electronic access or transmission of data or viruses. Because data stored on electronic media can deteriorate undetected or be modified without our knowledge, MassDOT cannot be held liable for its completeness or correctness. MassDOT makes no representation as to the compatibility of these files beyond the version of the stated CAD software.

By signing this form, I agree that it shall be my responsibility to reconcile this electronic data with the conformed contract documents, and that only the conformed contract documents shall be regarded as legal documents for this Project. I understand that this authorization does not give me the right to distribute the files. I agree to the terms above and wish to receive the AutoCAD files.

This signed form shall be emailed to the Highway Design Engineer at the MassDOT -Highway Division at the following email address:

DOTHighwayDesign@dot.state.ma.us
Attn: AutoCAD Files

Name of person requesting AutoCAD files: _____

Affiliation/Company: _____

Address: _____

_____

Telephone number: _____

Email address: _____

Signature/Date: _____

THIS PAGE IS INTENTIONALLY LEFT BLANK

DOCUMENT A00830

ARMY CORPS OF ENGINEERS

Self-Verification (SV) Application

*** THIS PAGE IS INTENTIONALLY LEFT BLANK ***

650 Suffolk St., Suite 200
Lowell, MA 01854

T 978.970.5600
TRCcompanies.com

April 1, 2024

Dan Vasconcelos, PWS
Project Manager/Environmental Scientist
United States Army Corps of Engineers
New England District Office
696 Virginia Road,
Concord, Massachusetts 01742-2751

RE: Response to Comments – NAE-2024-00583
Lawrence Manchester Rail Trail

Dear Mr. Vasconcelos,

On behalf of the Massachusetts Department of Transportation (MassDOT) and the City of Lawrence, TRC Environmental Corporation (TRC) submits this response to comments identified in the attached letter (Attachment A), dated March 14, 2024, from the United States Army Corps of Engineers (USACE) for the Lawrence Manchester Rail Trail (LMRC) Project (NAE-2024-00583). The USACE comments are associated with the Self-Verification Notification (SVN) that was submitted on February 28, 2024, via email.

Comment 1: The Self-Verification Notification (SVN) Form lists only 3,391 square feet of permanent impact. However, the plans also depict temporary impacts in four locations, totaling 22,621 square feet. Please clarify the impacts

Response to Comment 1: A majority of the temporary impacts previously depicted on the plans were the areas within the project limits that constitute an existing wetland planned to receive invasive species management control as part of the Project. As previously coordinated during a virtual meeting with the USACE on 12/7/2023 and follow up correspondence between MassDOT and USACE on 12/8/2023, members of the TEC design team, MassDOT, and the USACE concluded that this restoration activity/herbicide treatment work did not categorize as earthwork, dredging, or filling activities and therefore should not be accounted for as a contributing impact in the initial SVNF application. As shown in Attachment B, TEC has updated the plans by removing reference to temporary impacts in these areas and has properly designated them as “herbicide treatment work/restoration areas.” While a majority of the previously depicted temporary impacts can be discounted for, there exists 1,278 square feet of temporary impacts representing the limits of open cut excavation to construct the proposed bridge foundation (previously within the same limits). These areas will be regraded to match existing conditions and will also be restored. The design team has confirmed that the cumulative temporary (1,278 square feet) and permanent impacts (3,391 square feet) are less than 5,000 square feet (at 4,669 square feet). Therefore, we continue to propose submitting the SVN Form for USACE approval.

Comment 2: Under the General Permits for the Commonwealth of Massachusetts (GPs), projects are not eligible for self-verification if the total permanent and temporary impacts exceed 5,000 square feet. In such cases, a Pre-Construction Notification (PCN) application is required. Please verify the impacts and provide a complete PCN application package as needed.

Response to Comment 2: Refer to response to Comment 1 for confirmation of the Project impacts and verification that a SVN is as appropriate and a PCN is not needed.

Comment 3: The plan sheets referenced on the key plan do not appear to be correct. Please verify and correct as needed.

Response to Comment 3: The plan sheets have been updated in the key plan as requested (Attachment B).

Comment 4: Plans should be numbered sequentially (i.e., 1 of 14 through 14 of 14).

Response to Comment 4: The plan sheets have been numbered sequentially as requested (Attachment B).

Comment 5: Currently the plans do not include the portion crossing the Merrimack River (which are shown on the key sheet only). In this case it would be helpful to include those sheets, even if no work in Waters of the United States. is proposed on those sheets, to document for the record that no work is being proposed or authorized in the Merrimack River.

Response to Comment 5: The plan set has been updated to include the portion of the Project crossing the Merrimack River (Attachment B). As shown in the plans, there is no work proposed in Waters of the United States.

Comment 6: It is unclear what is causing the permanent and temporary impacts. Descriptive labels should be added to the plans for each impact area. For the permanent impacts, please also provide a cross-section view of the bridge work clearly showing the impacts. If a PCN is required, a narrative description of the proposed work in waters of the United States., including wetlands, will also be required.

Response to Comment 6: TEC has added descriptive labels to the plans to describe each impacted area. Additionally, TEC added a cross section of the proposed work to delineate the temporary and permanent impacts (see Attachment B). See above response regarding PCN filing applicability.

Comment 7: Please provide representative photographs of the wetlands to be impacted.

Response to Comment 7: Please see Attachment C for representative photographs of the wetlands as requested.

Comment 8: If a PCN is required, completed Army Corps Wetland Determination Data Forms must be submitted in support of the delineation.

Response to Comment 8: As previously noted, a PCN is not required for the Project. .

We appreciate your review of this information. If you should have any questions about the, please do not hesitate to contact me, Isabel Mohammadi-Hall, via phone at 201.306.2297 or via email at IMohammadi-Hall@trccompanies.com or Cori Beckwith via phone at 617.413.4409 or via email at corinna.beckwith@dot.state.ma.us.

Sincerely,

TRC Environmental Corporation

Isabel Mohammadi-Hall

Isabel Mohammadi-Hall
Environmental Scientist

CC: Daniel McCarthy, City of Lawrence (electronic submission)
Jody Trunfio, TEC (electronic submission)
William Chapman, TRC (electronic submission)

Attachments: Attachment A – USACE Letter – Response to SVN Submittal (NAE-2024-00583)
Attachment B – Updated SVN Application
Attachment C – Representative Photographs

Attachment A

USACE Letter – Response to SVN Submittal (NAE-2024-00583)

DEPARTMENT OF THE ARMY
U.S. ARMY CORPS OF ENGINEERS, NEW ENGLAND DISTRICT
NEW ENGLAND DISTRICT OFFICE
696 VIRGINIA ROAD
CONCORD MASSACHUSETTS 01742-2751

March 14, 2024

Regulatory Division
Transportation & Utility Section
NAE-2024-00583

Daniel McCarthy
City of Lawrence
200 Common Street
Lawrence, MA 01840
Via Email: dmccarthy@cityoflawrence.com

Corinna Beckwith
MassDOT - Highway Division
10 Park Plaza
Boston, MA 02116
Via Email: corinna.beckwith@dot.state.ma.us

Dear Mr. McCarthy and Ms. Beckwith:

This letter is in response to the application you submitted to the New England District, Regulatory Division on March 1, 2024, for a Department of the Army permit verification. This project has been assigned the file number NAE-2024-00583. This file number should be referenced in all correspondence with this office.

The proposed work includes the construction of a section of rail trail (Lawrence Manchester Rail Trail) in Lawrence, Massachusetts.

We have completed our initial review of the application and have determined that it is incomplete. The information listed below is necessary to have a complete application. Please provide this information in **one consolidated response within 30 days (April 13, 2024) of the date of this correspondence.** If you do not respond within the 30-day timeframe, the request will be administratively withdrawn. Closure of your file will not preclude you from re-opening the file at a later date, upon our receipt of the requested information.

1. The Self-Verification Notification (SVN) Form lists only 3,391 square feet of permanent impact. However, the plans also depict temporary impacts in four locations, totaling 22,621 square feet. Please clarify the impacts.

2. Under the General Permits for the Commonwealth of Massachusetts (GPs), projects are not eligible for self-verification if the total permanent and temporary impacts exceed 5,000 square feet. In such cases, a Pre-Construction

Notification (PCN) application is required. Please verify the impacts and provide a complete PCN application package as needed.

3. The plan sheets referenced on the key plan do not appear to be correct. Please verify and correct as needed.

4. Plans should be numbered sequentially (i.e., 1 of 14 through 14 of 14).

5. Currently the plans do not include the portion crossing the Merrimack River (which are shown on the key sheet only). In this case it would be helpful to include those sheets, even if no work in Waters of the U.S. is proposed on those sheets, to document for the record that no work is being proposed or authorized in the Merrimack River.

6. It is unclear what is causing the permanent and temporary impacts. Descriptive labels should be added to the plans for each impact area. For the permanent impacts, please also provide a cross-section view of the bridge work clearly showing the impacts. If a PCN is required, a narrative description of the proposed work in waters of the U.S., including wetlands, will also be required.

7. Please provide representative photographs of the wetlands to be impacted.

8. If a PCN is required, completed Army Corps Wetland Determination Data Forms must be submitted in support of the delineation.

Please note, we cannot process your application further until the additional information requested is received. You are cautioned that commencement of the proposed work in waters of the United States subject to U.S. Army Corps of Engineers' jurisdiction prior to DA authorization would constitute a violation of Federal laws and subject you to possible enforcement action.

If you have any questions concerning this correspondence, please contact Daniel Vasconcelos, Project Manager of the Regulatory Division at 978-318-8653, or by email at daniel.b.vasconcelos@usace.army.mil. Please take a moment to complete our customer satisfaction survey located at https://regulatory.ops.usace.army.mil/customer-service-survey/.

Sincerely,

Daniel Vasconcelos

Daniel B. Vasconcelos, PWS
Project Manager/Environmental Scientist

Attachment B

Updated SVN Application

U.S. Army Corps of Engineers (USACE)

SELF-VERIFICATION NOTIFICATION (SVN)

DATA REQUIRED BY THE PRIVACY ACT OF 1974

Authority Rivers and Harbors Act, Section 10, 33 USC 403; Clean Water Act, Section 404, 33 USC 1344; Regulatory Programs of the Corps of Engineers; Final Rule 33 CFR 320-332.

Principal Purpose This information will be used in evaluating activities under Self-Verification procedures within Massachusetts.

Routine Uses Routine uses will include: (1) Documenting compliance with the terms and conditions of the General Permit (GP) for activities that may require authorization pursuant to one or more of USACE's Regulatory authorities. (2) Records may be referred to other Federal, State, and local agencies for evaluation and enforcement purposes.

Disclosure Failure to fully comply and abide by the GP terms and conditions prior to commencing work and after completion project may result in formal enforcement action, up to and including monetary penalties and/or legal action, pursuant to 33 CFR Part 326.

Instructions The permittee must complete ALL required sections of this document before commencing USACE-regulated activities. A copy of this completed SVN must be kept on site during construction and be made available for review by USACE and other Federal, State, & Local regulatory authorities at any time. Within 30 days of initiating project construction, the permittee shall submit the completed SVN to USACE. The SVN shall be submitted to USACE as **ONE signed document** that includes project plans and documentation that supports each field (e.g., emails, letters, description, phone calls, surveys). Electronic submissions to the following address are strongly preferred: cenae-r-ma-sv@usace.army.mil. The email subject line shall contain the following: GP #, SVN, City/Town, and date submitted.

(ITEMS 1 THRU 3 TO BE FILLED BY USACE)

1. APPLICATION NO.	2. FIELD OFFICE CODE	3. DATE RECEIVED

APPLICANT AND AGENT INFORMATION

4. APPLICANT'S NAME	7. AGENT'S ADDRESS:
First - Daniel Middle - Last - McCarthy	First - Isabel Middle - Last - Moham
Company - City of Lawrence	Company - TRC Environmental Corporation
E-mail Address - dmccarthy@cityoflawrence.com	E-mail Address - IMohammadi-Hall@trccompanies.com
5. APPLICANT'S ADDRESS:	**8. AGENT'S ADDRESS:**
Address- 200 Common Street	Address- 650 Suffolk Street, Suite 200
City - Lawrence State - MA Zip - 01840 Country - USA	City - Lowell State - MA Zip - 01854 Country - U
6. APPLICANT'S PHONE NOs. w/AREA CODE	**9. AGENTS PHONE NOs. w/AREA CODE**
a. Residence b. Business c. Fax	a. Residence b. Business c. Fax
978.620.3505	201-306-2297

NAME, LOCATION, AND DESCRIPTION OF PROJECT SITE

10. PROJECT NAME OR TITLE
Lawrence Manchester Rail Corridor (LMRC) Rail Trail Project

11. FILE NUMBER(S) OF PREVIOUS USACE ACTIONS ON THE SITE (if applicable)	12. NAME OF WATERBODY

13. PROJECT COORDINATES (in decimal degrees)	14. PROJECT STREET ADDRESS (if applicable)
Latitude: °N Longitude: °W	Address Former Manchester-Lawrence railroad ROW from Merrimack St. to Lawrence/Methuen line
42.70622 -71.17149	City - Lawrence State - MA Zip - 01840

ACTIVITY TYPE, PROJECT IMPACTS, AVOIDANCE & MINIMIZATION

15. GENERAL PERMIT ACTIVITIES (CHECK ALL THAT APPLY)

1 ☐	6 ☐	11 ☐	16 ☐	21 ☐
2 ☐	7 ☐	12 ☐	17 ☐	22 ☐
3 ☐	8 ☐	13 ☐	18 ☐	23 ☑
4 ☐	9 ☐	14 ☐	19 ☐	24 ☐
5 ☐	10 ☐	15 ☑	20 ☐	25 ☐

16. SUMMARY OF PROJECT IMPACTS (*see instructions*)

Area (square feet)	Length (linear feet)	Volume (cubic yards)	Duration
3,391			Permanent
1,278			Temporary (approximately 3 months)

17. PROJECT PLANS (BY CHECKING THE BOXES BELOW, YOU CERTIFY THESE ITEMS ARE COMPLETE) (*see instructions*)

- [x] a. Plans shall at least contain the following: Vicinity Map, Plan View, and Typical Cross Section View of the proposed activity.
- [x] b. All direct, indirect and secondary impacts from USACE regulated activities are shown on the project plans.
- [x] c. The size of the impact area for each activity (acre, square feet, linear feet) are shown on the project plans.
- [ ] d. For discharges of fill material (§404), the volume of fill material is identified on the project plans.
- [x] e. The duration of each impact, permanent or temporary (X days), is identified on the project plans.
- [ ] f. Do activities with permanent impacts result in the loss of waters? If so, this is identified on the project plans.
- [x] g. All aquatic resources in the vicinity of the USACE regulated activities are delineated on the project plans.

18. AVOIDANCE & MINIMIZATION (BY CHECKING THE BOXES BELOW, YOU CERTIFY THESE CRITERIA ARE MET) (*see instructions*)

- [x] a. The project has been designed to avoid and minimize impacts to aquatic resources.
- [x] b. The footprint of activities in waters of the U.S. has been reduced to only what is necessary to achieve the overall project purpose.
- [x] c. All practicable measures have been taken to avoid and minimize impacts to aquatic resources through construction techniques and site access (e.g., Best Management Practices, Time of Year Restrictions).
- [x] d. All temporary impacts from USACE regulated activities will be restored upon completion of construction and the project area will be returned to pre-construction contours and conditions.

COMPLIANCE WITH FEDERAL REGULATIONS & SUPPLEMENTAL INFORMATION

19. DUE DILIGENCE (*see instructions*)

Complete the entries below to document compliance with the following Federal requirements. Construction may NOT begin if a PCN is/may be required, and you must contact USACE to determine permitting requirements. Documentation that demonstrates how the activity complies with each field below shall be submitted to the USACE as noted in the instructions block. See each General Condition (GC) in the GP for how to comply with each requirement.

a. State Historic Preservation Officer	Per Appendix A, SHPO was notified and they did not respond with concerns within 30 days.
b. Massachusetts BUAR	Per Appendix A, the activity has no potential to affect historic properties.
c. Tribal Historic Preservation Officers	The Tribe(s) were notified and they didn't respond with concerns within 30 days.
d. Endangered Species Act - NOAA	Another Federal agency has reached a no effect determination.
e. Endangered Species Act - USFWS	Another Federal action agency reached a no effect determination.
f. Northern Long Eared Bat (ESA)	No effect determination reached with the Rangewide D-Key. See Instructions below.*
g. Essential Fish Habitat	The activity fully complies with GC 11.
h. Wild & Scenic Rivers	There are no WSR's within 0.25 miles of the project area.
i. 401 Water Quality Certification 401	The activity qualifies under the general 401 WQC for the 2023 MA GPs.
	401 WQC/OOC File Number: 195-0217 OOC issued: 10/30/23 401 issued:
j. Section 408 Permission	Not Required per GC 15a-f, no Federal Projects are within the project vicinity.
k. Coastal Zone	The project is not located within the coastal zone.
l. Construction Mats	Placement of construction mats complies with GC 22.
m. Time of Year Restrictions	The project complies with TOY Restrictions in GC 20.
n. Vernal Pools	Per GC 28, the project is not located in a vernal pool.
o. Sediment & Erosion Controls	Per GC 25, the activity uses BMPs to avoid/minimize sedimentation & erosion.
p. Stream/Wetland Crossings	The activity complies with all applicable terms in GC 31.

20. AQUACULTURE ACTIVITIES - GP 18 (*see instructions*)

- [ ] a. If required, an Aquaculture Certification from the Massachusetts Division of Marine Fisheries was obtained prior to commencing work.
- [ ] b. Coordination with the U.S. Coast Guard pursuant to Private Aids to Navigation has occurred prior to commencing work.
- [ ] c. If required, a MEPA Certificate was obtained from the Massachusetts Environmental Protection Agency prior to commencing work. Not Required
- [ ] d. The prospective permittee contacted local authorities (e.g. harbormaster, select board, shellfish constable) for authorization of their facility prior to commencing work.

21. ADDITIONAL INFORMATION/ATTACHMENTS (*see instructions*)

- [x] a. The project plans are enclosed in this SVN submittal (see block 17).
- [x] b. The activity IS NOT funded through the Bipartisan Infrastructure Bill (also known as the Infrastructure Investment and Jobs Act).
- [x] c. All required state, local and federal approvals were acquired prior to starting construction in USACE jurisdiction.
- [x] d. After construction of the activity is completed, a complete Certificate of Compliance will be submitted to USACE.

22. IS THERE ANOTHER LEAD FEDERAL AGENCY:

[x] YES [ ] NO Federal Highway Administration (FHWA)

23. STATEMENT OF AUTHORIZATION *(see instructions)*

I certify that I possess the authority to undertake the work described herein or am acting as the duly authorized agent of the applicant.

SIGNATURE OF APPLICANT	DATE	SIGNATURE OF AGENT	DATE
Janet McCarty	3/29/24	Isabel Mohammadi-Hall Digitally signed by Isabel Mohammadi-Hall Date: 2024.03.21 15:27:10 -04'00'	

24. SIGNATURES *(see instructions)*

I hereby certify that the information in this Self-Verification Notification is complete and accurate. As the applicant or their duly authorized agent, I certify the activity was completed in accordance with the terms and conditions of the GP. This includes all applicable terms, general conditions, and activity-specific GP criteria. I agree to allow the duly authorized representatives of the Corps of Engineers Regulatory Program and other regulatory or advisory agencies to enter upon the premises of the project site at reasonable times to evaluate inspect and photograph site conditions. This consent to enter the property is superior to, takes precedence over, and waives any communication to the contrary. For example, if the property is posted as "no trespassing" this consent specifically supersedes and waives that prohibition and grants permission to enter the property despite such posting.

SIGNATURE OF APPLICANT	DATE	SIGNATURE OF AGENT	DATE
Janet McCarty	3/29/24	Isabel Mohammadi-Hall Digitally signed by Isabel Mohammadi-Hall Date: 2024.03.21 15:27:41 -04'00'	

18 U.S.C. Section 1001 provides that: Whoever, in any manner within the jurisdiction of any department or agency of the United States knowingly and willfully falsifies, conceals, or covers up any trick, scheme, or disguises a material fact or makes any false, fictitious or fraudulent statements or representations or makes or uses any false writing or document knowing same to contain any false, fictitious or fraudulent statements or entry, shall be fined not more than $10,000 or imprisoned not more than five years or both.

Attachment A: Location Map

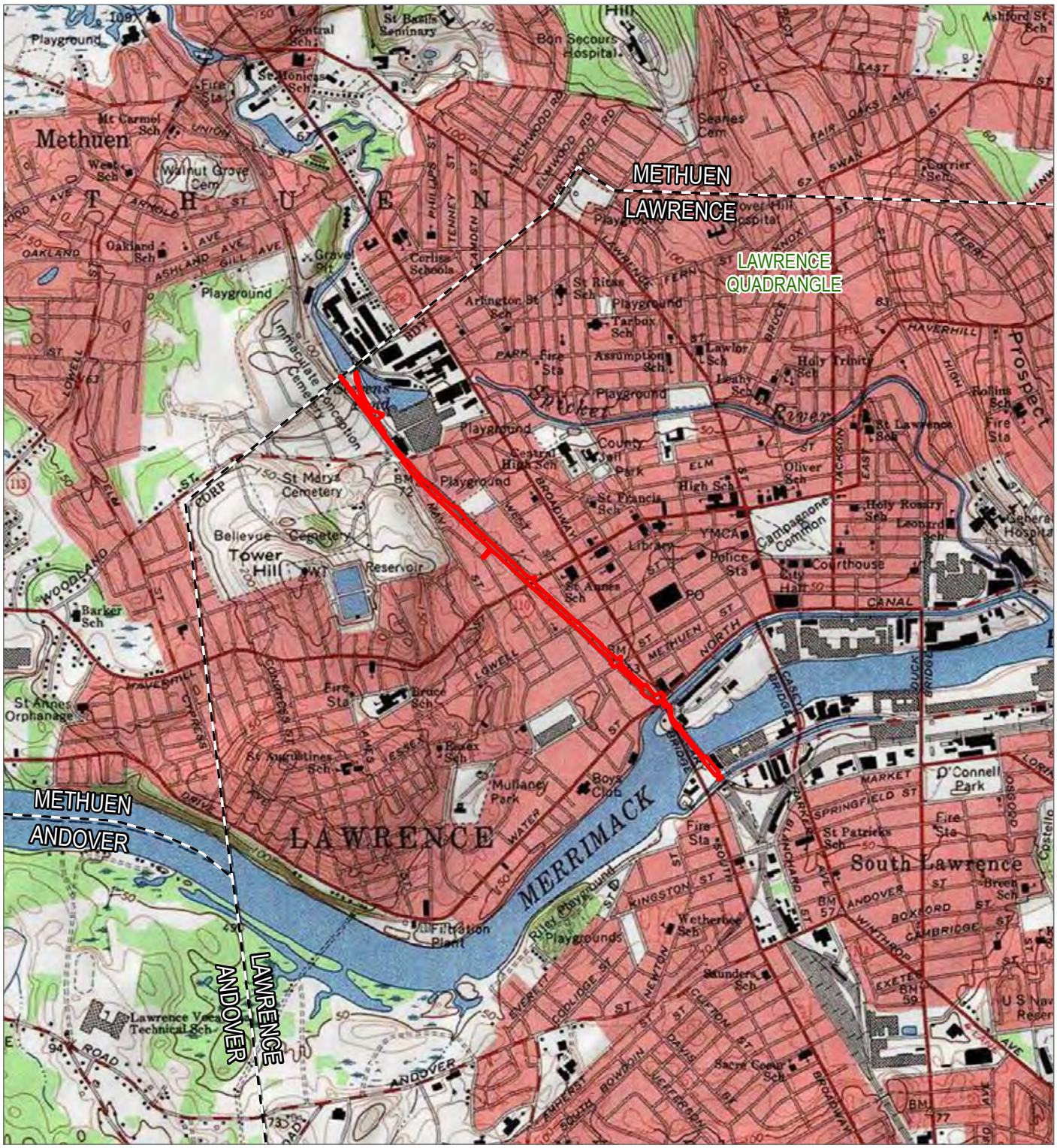

PROJECT AREA

MUNICIPAL BOUNDARY

N

0 1,000 2,000

FEET

1:24,000 1" = 2,000'

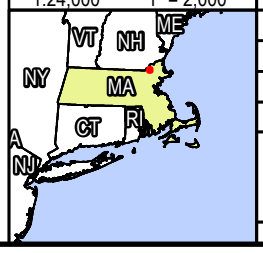

BASE MAP: USA TOPOGRAPHIC MAP, ESRI
DATA SOURCES: TRC

PROJECT:

LAWRENCE RAIL TRAIL

TITLE:

SITE LOCATION MAP
LAWRENCE, MA

DRAWN BY:	S. MOTURI	PROJ. NO.:	274047.0000.0000
CHECKED BY:	R. SPRING		
APPROVED BY:	C. MARTIN		**FIGURE 1**
DATE:	FEBRUARY 2023		

TRC

650 SUFFOLK ST,
WANNALANCIT MILLS,
LOWELL, MA 01854

FILE: LawrenceRailTrail

Coordinate System: NAD 1983 StatePlane Massachusetts Mainland FIPS 2001 Feet: Map Rotation: 0
-- Saved By: SMOTURI on 2/16/2023, 15:32:45 PM: File Path: T:\1-PROJECTS\LMRC\274047_LawrenceRailTrail_MA\2-APRX\LawrenceRailTrail.aprx: Layout Name: Fig1_Site_Location_USGS_8_5x11P

Attachment B: Permitting Plans

MASSACHUSETTS DEPARTMENT OF TRANSPORTATION
HIGHWAY DIVISION

LAWRENCE
LMRC RAIL TRAIL

STATE	FED. AID PROJ. NO.	SHEET NO.	TOTAL SHEETS
MA	-	1	21
PROJECT FILE NO.	608930		

TITLE SHEET & INDEX

PLAN AND PROFILE OF

LAWRENCE MANCHESTER RAIL CORRIDOR (LMRC) RAIL TRAIL

IN THE CITY OF

LAWRENCE

ESSEX COUNTY

FEDERAL AID PROJECT NO.

USACE SUBMITTAL

THESE PLANS ARE SUPPLEMENTED BY THE OCTOBER 2017 CONSTRUCTION STANDARD DETAILS, THE 2015 OVERHEAD SIGNAL STRUCTURE AND FOUNDATION STANDARD DRAWINGS, MASSDOT TRAFFIC MANAGEMENT PLANS AND DETAIL DRAWINGS, THE 1990 STANDARD DRAWINGS FOR SIGNS AND SUPPORTS, THE 1968 STANDARD DRAWINGS FOR TRAFFIC SIGNALS AND HIGHWAY LIGHTING, AND THE LATEST EDITION OF THE AMERICAN STANDARD FOR NURSERY STOCK.

INDEX

SHEET NO.	DESCRIPTION
1	TITLE SHEET & INDEX
2	LEGEND & ABBREVIATIONS
3	KEY PLAN
4 - 6	TYPICAL SECTIONS & PAVEMENT NOTES
7 - 21	CONSTRUCTION PLANS

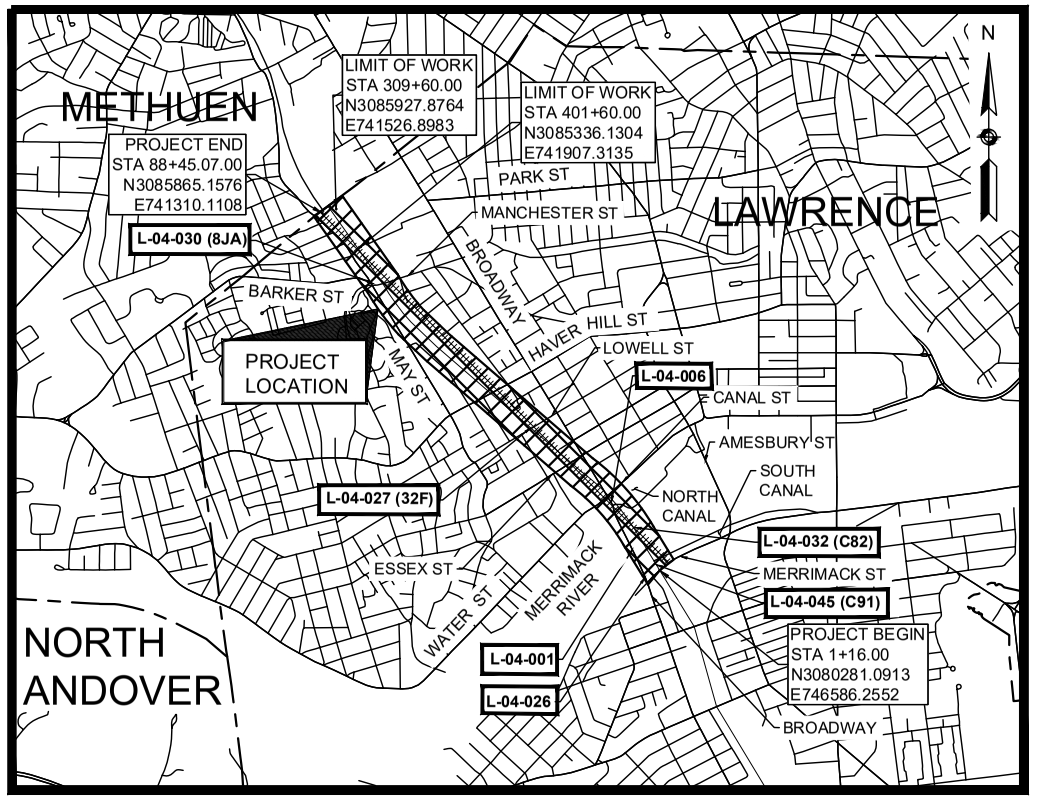

0 1500 3000 4500 6000

SCALE: 1" = 1500'

LENGTH OF PROJECT = 7,900.00 FEET = 1.496 MILES

DATE	DESCRIPTION	REV #
3/21/2024	USACE SUBMISSION	-

TEC The Engineering Corp

282 Merrimack Street, 2nd Floor, Lawrence, MA 01843, 978-794-1792
311 Main Street, 2nd Floor, Worcester, MA 01608, 508-868-5104
169 Ocean Blvd, Unit 3, PO Box 249, Hampton, NH 03842, 603-601-8154

www.TheEngineeringCorp.com

massDOT Massachusetts Department of Transportation Highway Division

APPROVED

CHIEF ENGINEER **DATE**

608930_HD1\TITLE SHEET - NOI.DWG Plotted on 20-Mar-2024 3:28 PM

A00830 - 16

Proposal No. 608930-128034

GENERAL SYMBOLS

EXISTING	PROPOSED	DESCRIPTION
JB	JB	JERSEY BARRIER
CB	CB/GI	CATCH BASIN OR GUTTER INLET
	CBCI/GICI	CATCH BASIN OR GUTTER INLET W/ CURB INLET
FP	FP	FLAG POLE
GP	GP	GAS PUMP
MB	MB	MAIL BOX
		POST SQUARE
		POST CIRCULAR
WELL	WELL	WELL
EHH	EHH	ELECTRIC HANDHOLE
		FENCE GATE POST
GG	GG	GAS GATE
BHL #	BHL #	BORING HOLE
MW #	MW #	MONITORING WELL
TP #	TP #	TEST PIT
		HYDRANT
		LIGHT POLE
CO.BD.		COUNTY BOUND
		GPS POINT
C	C	CABLE MANHOLE
D	D	DRAINAGE MANHOLE
E	E	ELECTRIC MANHOLE
G	G	GAS MANHOLE
M	M	MISC MANHOLE
S	S	SEWER MANHOLE
T	T	TELEPHONE MANHOLE
W	W	WATER MANHOLE
MHB	MHB	MASSACHUSETTS HIGHWAY BOUND
MON		MONUMENT
SB		STONE BOUND
TB		TOWN OR CITY BOUND
		TRAVERSE OR TRIANGULATION STATION
TPL or GUY	TPL or GUY	TROLLEY POLE OR GUY POLE
HTP		TRANSMISSION POLE
UFB	UFB	UTILITY POLE W/ FIREBOX
UPDL	UPDL	UTILITY POLE WITH DOUBLE LIGHT
ULT	ULT	UTILITY POLE W / 1 LIGHT
UPL	UPL	UTILITY POLE
		BUSH
SIZE & TYPE		TREE
		STUMP
		SWAMP / MARSH
WG	WG	WATER GATE
WSO	WSO	WATER SHUTOFF/CURB STOP
PM	PM	PARKING METER
		OVERHEAD CABLE/WIRE
		CURBING
100 99		CONTOURS (ON-THE-GROUND SURVEY DATA)
100 99		CONTOURS (PHOTOGRAMMETRIC DATA)
		UNDERGROUND DRAIN PIPE (DOUBLE LINE 24 INCH AND OVER)
		UNDERGROUND ELECTRIC DUCT (DOUBLE LINE 24 INCH AND OVER)
		UNDERGROUND GAS MAIN (DOUBLE LINE 24 INCH AND OVER)
		UNDERGROUND SEWER MAIN (DOUBLE LINE 24 INCH AND OVER)
		UNDERGROUND TELEPHONE DUCT (DOUBLE LINE 24 INCH AND OVER)
		UNDERGROUND WATER MAIN (DOUBLE LINE 24 INCH AND OVER)
		BALANCED STONE WALL
		GUARD RAIL - STEEL POSTS
		GUARD RAIL - WOOD POSTS
x	x	CHAIN LINK OR METAL FENCE
		WOOD FENCE
		SEDIMENT CONTROL BARRIER
		COIR LOG
		TREE LINE
		LIMIT OF SEEDING
		EDGE OF PAVEMENT
		SAWCUT LINE
		TOP OR BOTTOM OF SLOPE
		LIMIT OF EDGE OF MICROMILLING AND OVERLAY
		BANK OF RIVER OR STREAM
		BORDER OF WETLAND
		100 FT WETLAND BUFFER
		200 FT RIVERFRONT BUFFER
		STATE HIGHWAY LAYOUT
		TOWN OR CITY LAYOUT
		COUNTY LAYOUT
		RAILROAD SIDELINE
		TOWN OR CITY BOUNDARY LINE
		PROPERTY LINE OR APPROXIMATE PROPERTY LINE
		EASEMENT

PAVEMENT MARKINGS SYMBOLS

EXISTING	PROPOSED	DESCRIPTION
		PAVEMENT ARROW - WHITE
ONLY	ONLY	LEGEND "ONLY" - WHITE
		BIKE LANE LEGEND - WHITE
	SL	STOP LINE
	CW	CROSSWALK
	SWL	SOLID WHITE LINE
	SYL	SOLID YELLOW LINE
	BWL	BROKEN WHITE LINE
	BYL	BROKEN YELLOW LINE
	DWL	6" DOTTED WHITE LINE (3' LINE W/ 9' GAP)
	DYL	6" DOTTED YELLOW LINE (3' LINE W/ 9' GAP)
	DWLEx	6" DOTTED WHITE LINE EXTENSION (2' LINE W/ 6' GAP)
	DYLEx	6" DOTTED YELLOW LINE EXTENSION (2' LINE W/ 6' GAP)
	DBWL	DOUBLE WHITE LINE
	DBYL	DOUBLE YELLOW LINE
	YGL	12" YELLOW GORE LINE (3:1, 10' O.C.)

TRAFFIC SYMBOLS

EXISTING	PROPOSED	DESCRIPTION
		CONTROLLER CABINET, FOUNDATION
		CONTROLLER CABINET, FOUNDATION, CONC. PAD
		MAST ARM FOUNDATION (SCALE OF BLOCK = DIAMETER IN INCHES)
		MAST ARM (LENGTH NOTED)
		EMERGENCY PREEMPTION CONFIRMATION STROBE LIGHT
		VEHICULAR SIGNAL HEAD
		PEDESTRIAN SIGNAL HEAD
		MAST ARM OR TS POLE MOUNTED SIGN
		EMERGENCY PRE-EMPTION RECEIVER
		EMERGENCY PRE-EMPTION CONFIRMATION STROBE
		PEDESTRIAN PUSH BUTTON
		YAGI ANTENNA
		BICYCLE WIRE LOOP DETECTOR (SIZE AS NOTED)
		WIRE LOOP DETECTOR (SIZE AND TYPE NOTED)
		TRAFFIC SIGN (1 POST)
		TRAFFIC SIGN (2 POST)
		PULL BOX 12"x12" (OR AS NOTED)
		ELECTRIC HANDHOLE 12"x24" (OR AS NOTED)
		TRAFFIC SIGNAL CONDUIT

TRAFFIC SIGNAL ABBREVIATIONS

CAB.	CABINET
CCVE	CLOSED CIRCUIT VIDEO EQUIPMENT
DW	STEADY DON'T WALK
FDW	FLASHING DON'T WALK
FR	FLASHING CIRCULAR RED
FRL	FLASHING RED LEFT ARROW
FRR	FLASHING RED RIGHT ARROW
FY	FLASHING CIRCULAR YELLOW
FYL	FLASHING YELLOW LEFT ARROW
FYR	FLASHING YELLOW RIGHT ARROW
G	STEADY CIRCULAR GREEN
GL	STEADY GREEN LEFT ARROW
GR	STEADY GREEN RIGHT ARROW
GSL	STEADY GREEN SLASH LEFT ARROW
GSR	STEADY GREEN SLASH RIGHT ARROW
GV	STEADY GREEN VERTICAL ARROW
OL	OVERLAP
PED	PEDESTRIAN
PTZ	PAN, TILT, ZOOM
R	STEADY CIRCULAR RED
RL	STEADY RED LEFT ARROW
RR	STEADY RED RIGHT ARROW
TR SIG	TRAFFIC SIGNAL

TRAFFIC SIGNAL ABBREVIATIONS (cont.)

TSC	TRAFFIC SIGNAL CONDUIT
W	STEADY WALKING PERSON
Y	STEADY CIRCULAR YELLOW
YL	STEADY YELLOW LEFT ARROW

ABBREVIATIONS

GENERAL

AADT	ANNUAL AVERAGE DAILY TRAFFIC
ABAN	ABANDON
ADJ	ADJUST
APPROX.	APPROXIMATE
A.C.	ASPHALT CONCRETE
ACCM PIPE	ASPHALT COATED CORRUGATED METAL PIPE
BIT.	BITUMINOUS
BC	BOTTOM OF CURB
BD.	BOUND
BL	BASELINE
BLDG	BUILDING
BM	BENCHMARK
BO	BY OTHERS
BOS	BOTTOM OF SLOPE
BR.	BRIDGE
CB	CATCH BASIN
CBCI	CATCH BASIN WITH CURB INLET
CC	CEMENT CONCRETE
CCM	CEMENT CONCRETE MASONRY
CEM	CEMENT
CI	CURB INLET
CIP	CAST IRON PIPE
CIT	CHANGE IN TYPE
CLF	CHAIN LINK FENCE
CL	CENTERLINE
CMP	CORRUGATED METAL PIPE
CSP	CORRUGATED STEEL PIPE
CO.	COUNTY
CONC	CONCRETE
CONT	CONTINUOUS
CONST	CONSTRUCTION
CR GR	CROWN GRADE
DHV	DESIGN HOURLY VOLUME
DI	DROP INLET
DIA	DIAMETER
DIP	DUCTILE IRON PIPE
DW	STEADY DON'T WALK - PORTLAND ORANGE
DWP	DETECTABLE WARNING PANEL
DWY	DRIVEWAY
ELEV (or EL.)	ELEVATION
EMB	EMBANKMENT
EOP	EDGE OF PAVEMENT
EXIST (or EX)	EXISTING
EXC	EXCAVATION
F&C	FRAME AND COVER
F&G	FRAME AND GRATE
FDN.	FOUNDATION
FDP	FULL DEPTH PAVEMENT
FLDSTN	FIELDSTONE
GAR	GARAGE
GC	GRANITE CURB
GD	GROUND
GG	GAS GATE
GI	GUTTER INLET
GIP	GALVANIZED IRON PIPE
GRAN	GRANITE
GRAV	GRAVEL
GRD	GUARD
HDW	HEADWALL
HH	HAND HOLE
HMA	HOT MIX ASPHALT
HOR	HORIZONTAL
HYD	HYDRANT
INV	INVERT
JCT	JUNCTION
L	LENGTH OF CURVE
LB	LEACH BASIN
LOG	LIMIT OF GRADING
LP	LIGHT POLE
L&S	LOAM AND SEED
LT	LEFT
MAX	MAXIMUM
MB	MAILBOX
MH	MANHOLE
MHB	MASSACHUSETTS HIGHWAY BOUND
MIN	MINIMUM
NIC	NOT IN CONTRACT
NO.	NUMBER
OCS	OUTLET CONTROL STRUCTURE

LAWRENCE
LMRC RAIL TRAIL

STATE	FED. AID PROJ. NO.	SHEET NO.	TOTAL SHEETS
MA	-	2	21
PROJECT FILE NO.	608930		

LEGEND & ABBREVIATIONS

ABBREVIATIONS (cont.)

GENERAL

PC	POINT OF CURVATURE
PCC	POINT OF COMPOUND CURVATURE
P.G.L.	PROFILE GRADE LINE
PI	POINT OF INTERSECTION
POC	POINT ON CURVE
POT	POINT ON TANGENT
PRC	POINT OF REVERSE CURVATURE
PROJ	PROJECT
PROP	PROPOSED
PSB	PLANTABLE SOIL BORROW
PT	POINT OF TANGENCY
PVC	POINT OF VERTICAL CURVATURE
PVI	POINT OF VERTICAL INTERSECTION
PVT	POINT OF VERTICAL TANGENCY
PVMT	PAVEMENT
PWW	PAVED WATERWAY
R	RADIUS OF CURVATURE
R&D	REMOVE AND DISPOSE
RCP	REINFORCED CONCRETE PIPE
RD	ROAD
RDWY	ROADWAY
REM	REMOVE
REMOD	REMODEL
RET	RETAIN
RET WALL	RETAINING WALL
ROW	RIGHT OF WAY
RR	RAILROAD
RRFB	RECTANGULAR RAPID FLASHING BEACON
R&R	REMOVE AND RESET
R&S	REMOVE AND STACK
RT	RIGHT
SB	STONE BOUND
SHLD	SHOULDER
SMH	SEWER MANHOLE
ST	STREET
STA	STATION
SSD	STOPPING SIGHT DISTANCE
SHLO	STATE HIGHWAY LAYOUT LINE
SW	SIDEWALK
T	TANGENT DISTANCE OF CURVE/TRUCK %
TAN	TANGENT
TEMP	TEMPORARY
TC	TOP OF CURB
TOS	TOP OF SLOPE
TYP	TYPICAL
UP	UTILITY POLE
VAR	VARIES
VERT	VERTICAL
VC	VERTICAL CURVE
WCR	WHEEL CHAIR RAMP
WG	WATER GATE
WIP	WROUGHT IRON PIPE
WM	WATER METER/WATER MAIN
X-SECT	CROSS SECTION

608930_HD2(LEGEND) 22X34.DWG Plotted on 20-Mar-2024 3:29 PM

608930_HD3(KEY PLAN) 22X34.DWG Plotted on 20-Mar-2024 3:30 PM

LAWRENCE
LMRC RAIL TRAIL

STATE	FED. AID PROJ. NO.	SHEET NO.	TOTAL SHEETS
MA	-	3	21
PROJECT FILE NO. 608930			

KEY PLAN

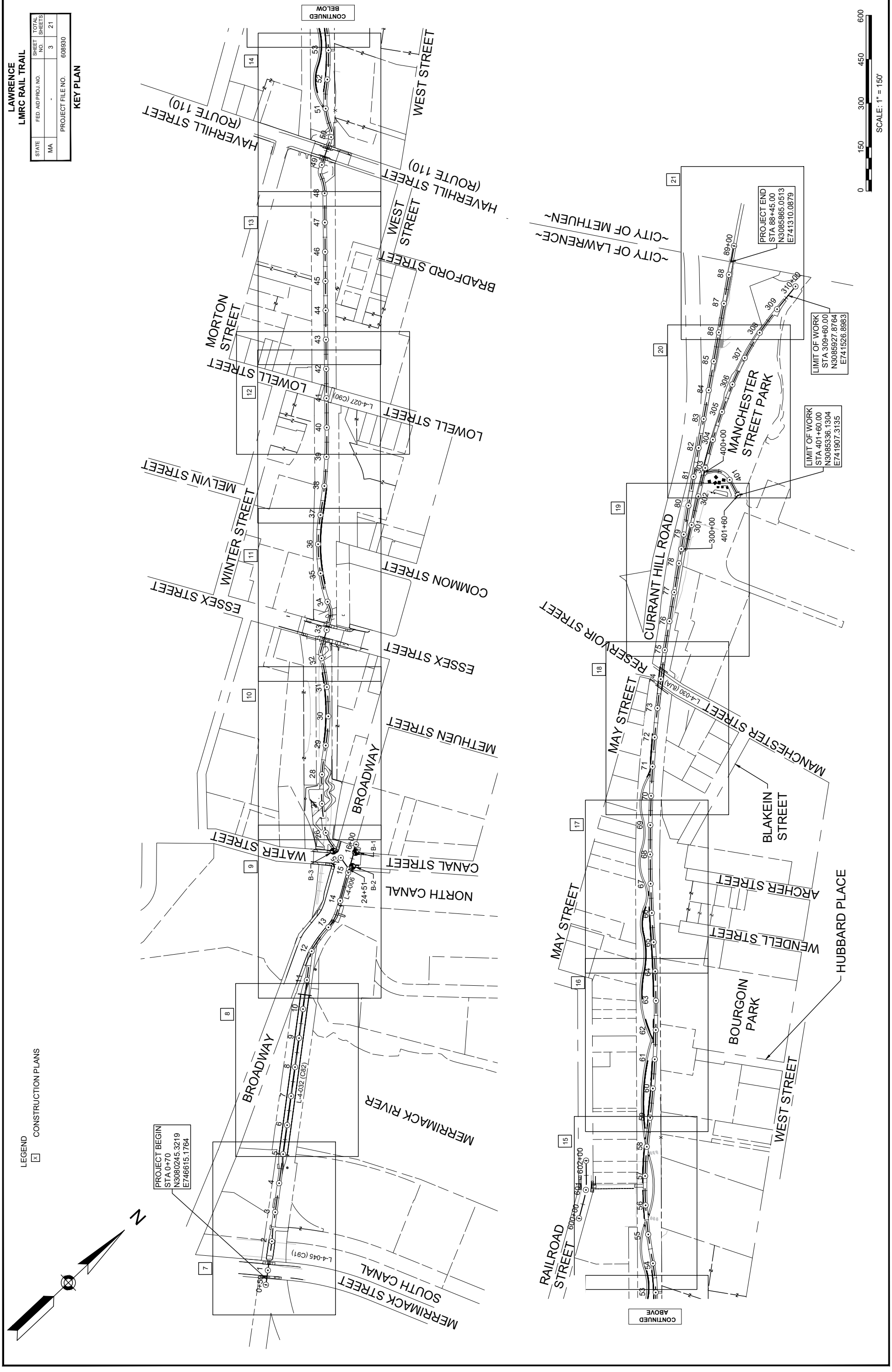

Plotted on 20-Mar-2024 3:31 PM
608930_HDA(TYPICAL SECTIONS) 22X34.DWG

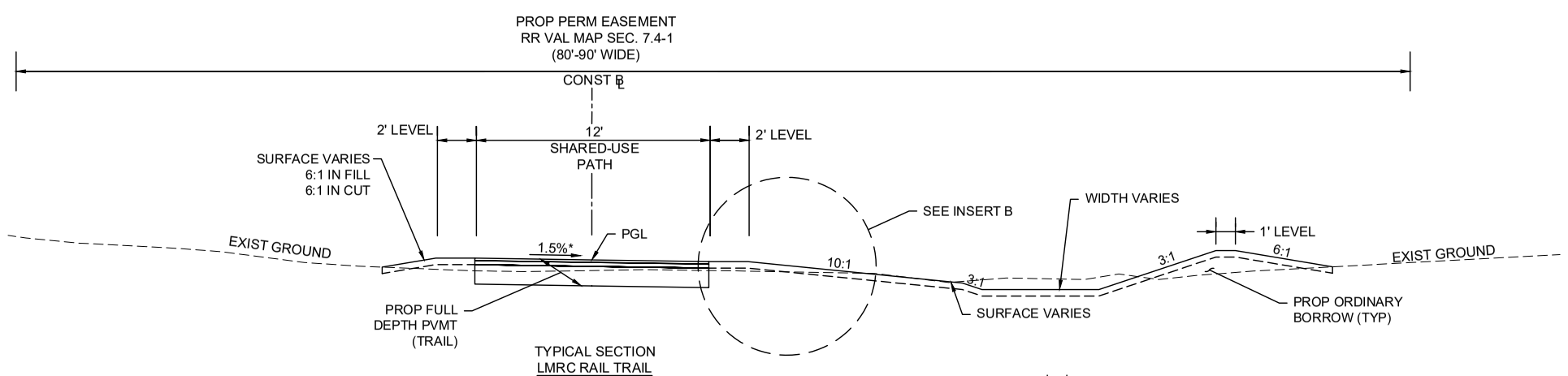

TYPICAL SECTION
LMRC RAIL TRAIL
STA 34+65± TO 39+52±
* TOLERANCE FOR CONSTRUCTION = ±0.5%
NTS

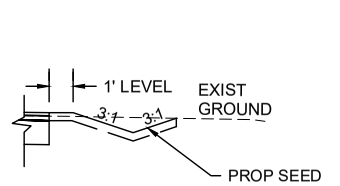

INSERT B
STA 39+00± TO STA 39+52

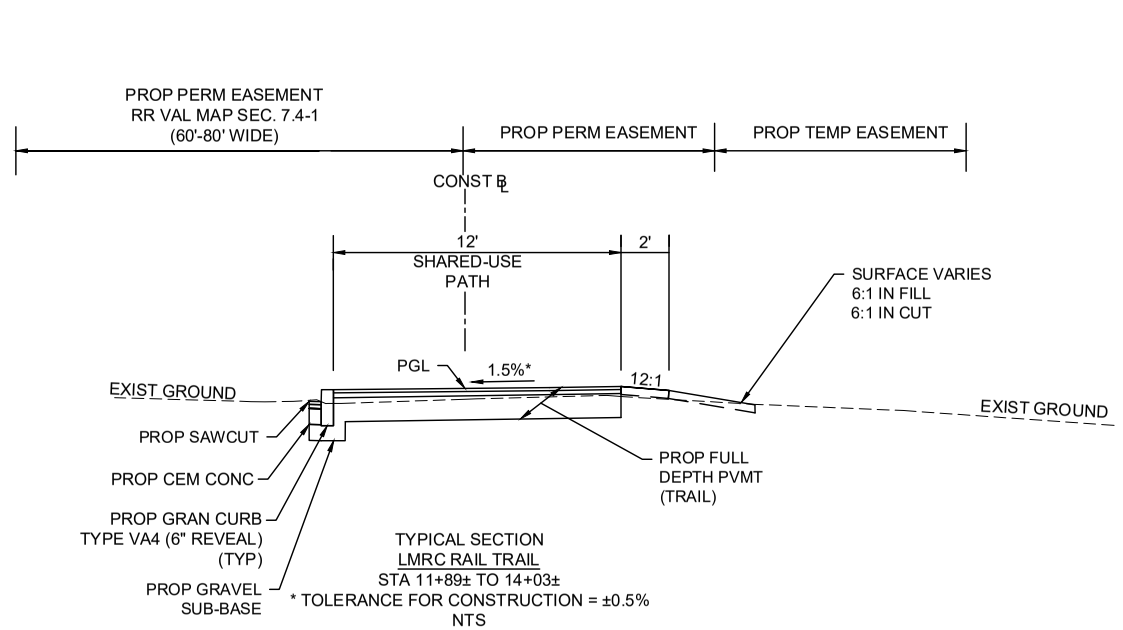

TYPICAL SECTION
LMRC RAIL TRAIL
STA 11+89± TO 14+03±
* TOLERANCE FOR CONSTRUCTION = ±0.5%
NTS

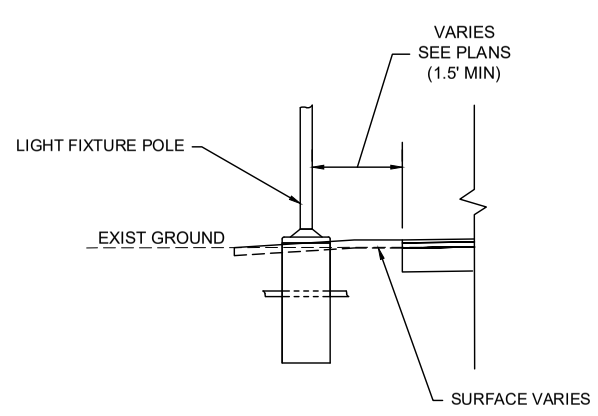

LIGHTING FIXTURE OFFSET
LMRC RAIL TRAIL

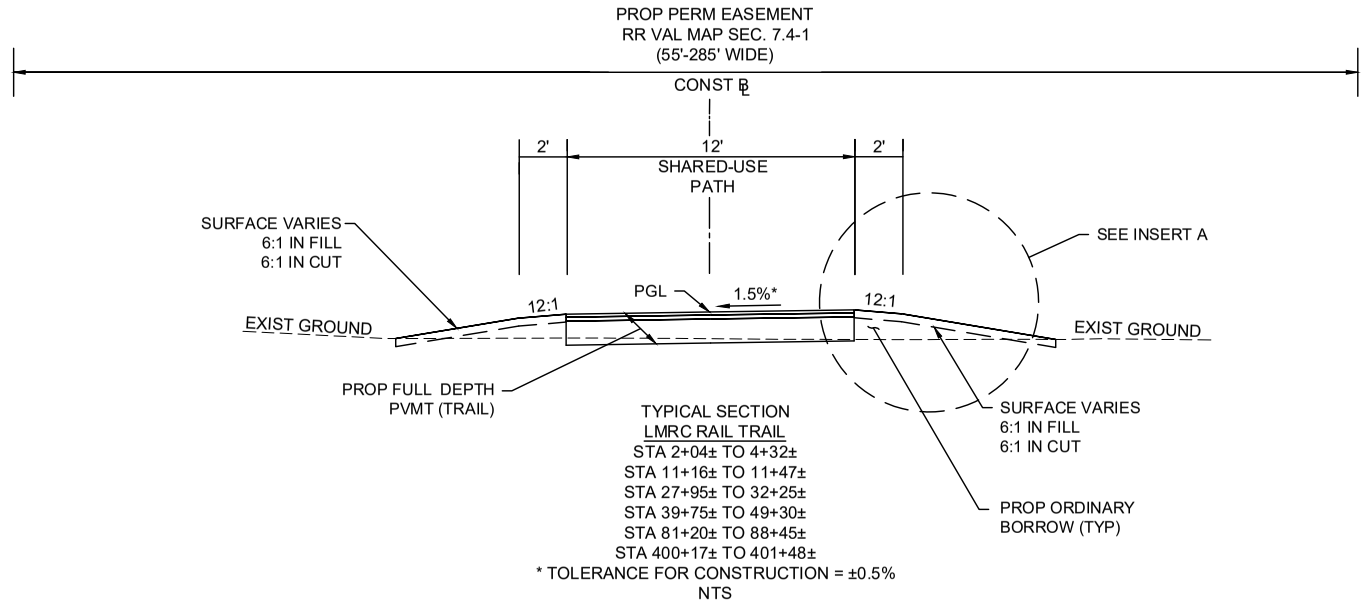

TYPICAL SECTION
LMRC RAIL TRAIL
STA 2+04± TO 4+32±
STA 11+16± TO 11+47±
STA 27+95± TO 32+25±
STA 39+75± TO 49+30±
STA 81+20± TO 88+45±
STA 400+17± TO 401+48±
* TOLERANCE FOR CONSTRUCTION = ±0.5%
NTS

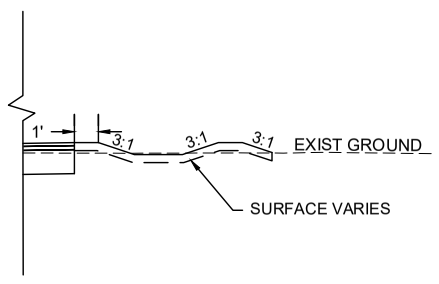

INSERT A
STA 39+75± TO STA 49+30±

PAVEMENT NOTES

PROPOSED HOT MIX ASPHALT (HMA) MILL & OVERLAY
SURFACE: 1½" SUPERPAVE SURFACE COURSE - 12.5 POLYMER (SSC - 12.5 - P) OVER
1½" PAVEMENT FINE MILLING

PROPOSED HOT MIX ASPHALT (HMA) MILL & OVERLAY - (SOUTH BROADWAY/ CANAL STREET/ WATER STREET)

SURFACE: 1½" SUPERPAVE SURFACE COURSE - 12.5 POLYMER (SSC - 12.5 - P) OVER
1½" PAVEMENT FINE MILLING

PROPOSED HOT MIX ASPHALT (HMA) DRIVEWAY & HOT MIX ASPHALT (HMA) SIDEWALK AT DRIVEWAYS

SURFACE: 1½" SUPERPAVE SURFACE COURSE - 9.5 (SSC - 9.5) OVER
2½" SUPERPAVE SURFACE COURSE - 12.5 (SSC - 12.5) OVER

BASE: 8" GRAVEL BORROW, TYPE b
ADD GRAVEL BORROW. TYPE b AS REQUIRED

PROPOSED HOT MIX ASPHALT (HMA) SIDEWALK/ WALK

SURFACE: 1¼" SUPERPAVE SURFACE COURSE - 9.5 (SSC - 9.5) OVER
1¾" SUPERPAVE SURFACE COURSE - 12.5 (SSC - 12.5) OVER

BASE: 8" GRAVEL BORROW, TYPE b

PROPOSED FULL DEPTH PAVEMENT (ROADWAY)

SURFACE: 1½" SUPERPAVE SURFACE COURSE - 12.5 (SSC - 12.5) OVER
2¼" SUPERPAVE INTERMEDIATE COURSE - 19.0 (SIC - 19.0) OVER

BASE: 4½" SUPERPAVE BASE COURSE - 37.5 (SBC - 37.5) OVER

SUBBASE: 12" GRAVEL BORROW, TYPE b

PROPOSED FULL DEPTH PAVEMENT (TRAIL)

SURFACE: 1½" SUPERPAVE SURFACE COURSE - 9.5 (SSC - 9.5) OVER
2½" SUPERPAVE INTERMEDIATE COURSE - 12.5 (SIC - 12.5) OVER

BASE: 12" (MIN) GRAVEL BORROW, TYPE b

PROPOSED PERMANENT PAVEMENT TRENCH PATCH

SURFACE: 1½" SUPERPAVE SURFACE COURSE - 12.5 (SSC - 12.5) OVER
2¼" SUPERPAVE INTERMEDIATE COURSE - 19.0 (SIC - 19.0) OVER
(VARIABLE DEPTH (SEE NOTE 5) SUPERPAVE INTERMEDIATE COURSE - 19.0 (SIC - 19.0)
COMPACTED IN 2¼" (MIN) AND 3" (MAX) LIFTS OVER

BASE: 8" GRAVEL BORROW, TYPE b OVER

SUBBASE: EXISTING MATERIAL SUITABLE FOR RE-USE SUPPLEMENTED WITH GRAVEL BORROW AS NECESSARY TO MATCH GRADE (SEE VARIOUS TRENCH DETAILS)

PROPOSED CEMENT CONCRETE SIDEWALK / WALK/ CURB RAMP / MEDIAN

SURFACE: 4" CEMENT CONCRETE (4000 PSI, ¾", 610), AIR ENTRAINED
BASE: 8" GRAVEL BORROW, TYPE b

PROPOSED CEMENT CONCRETE SIDEWALK AT DRIVEWAYS

SURFACE: 6" CEMENT CONCRETE (4000 PSI, ¾", 610), AIR ENTRAINED
BASE: 8" GRAVEL BORROW, TYPE b

PROPOSED GRAVEL WALK

SURFACE: 4" PROCESSED GRAVEL OVER

BASE: 8" GRAVEL BORROW,TYPE b

608930_HD4(TYPICAL SECTIONS) 22X34.DWG Plotted on 20-Mar-2024 3:32 PM

LAWRENCE
LMRC RAIL TRAIL

STATE	FED. AID PROJ. NO.	SHEET NO.	TOTAL SHEETS
MA	-	5	21
PROJECT FILE NO.	608930		

TYPICAL SECTIONS & PAVEMENT NOTES - 2 OF 3

GENERAL PAVEMENT NOTES:

1. ASPHALT EMULSION FOR TACK COAT SHALL BE APPLIED BETWEEN ALL ASPHALT SURFACES AND SAWCUT JOINTS BEFORE PAVING. HMA JOINT ADHESIVE SHALL BE APPLIED TO ALL COLD JOINTS (LONGITUDINAL AND TRANSVERSE) BEFORE PAVING SURFACE COURSE. ASPHALT EMULSION FOR TACK COAT SHALL BE APPLIED IN ACCORDANCE WITH SUBSECTION 450.43. ALL SURFACES SHALL BE CLEAN OF ALL ORGANICS, DEBRIS, AND SAND PRIOR TO PAVING.
2. ALL HMA SHALL BE IN ACCORDANCE WITH SECTION 450.
3. ALL GRAVEL BORROW MEETING SPECIFICATION DETERMINED BY THE ENGINEER SHALL BE RETAINED IN PLACE, COMPACTED, AND LEVELED WITH GRAVEL BORROW TYPE b AS REQUIRED.
4. TOTAL DEPTH OF PROPOSED PAVEMENT IN PERMANENT TRENCH PATCH SHALL BE 8.25" OR SHALL MATCH THE EXISTING PAVEMENT DEPTH, WHICHEVER DEPTH IS DEEPER.

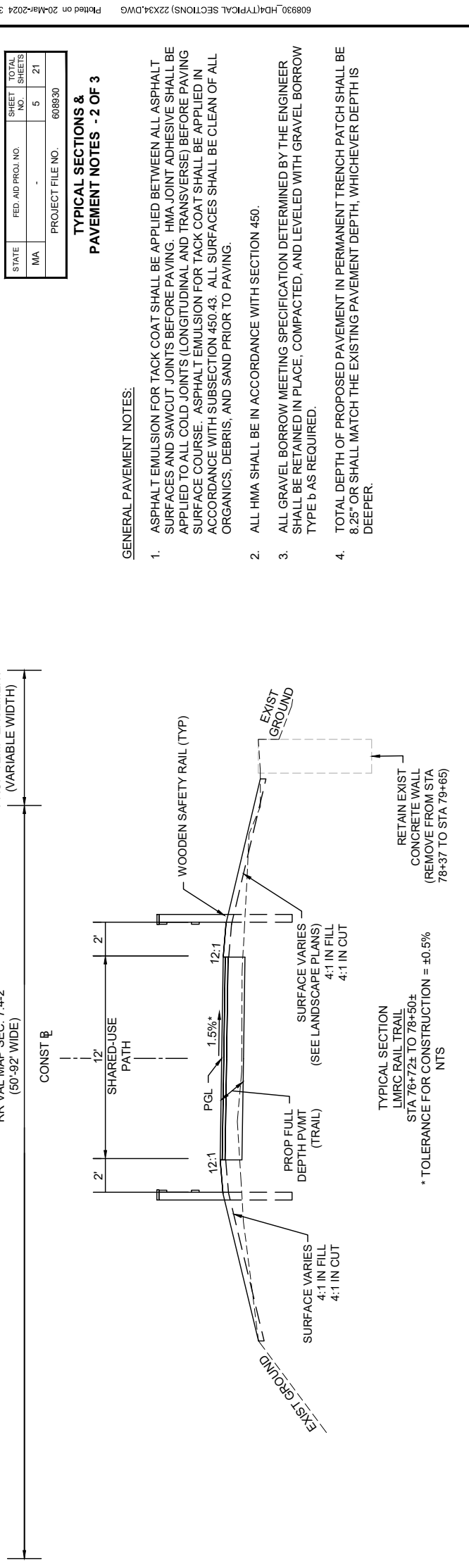

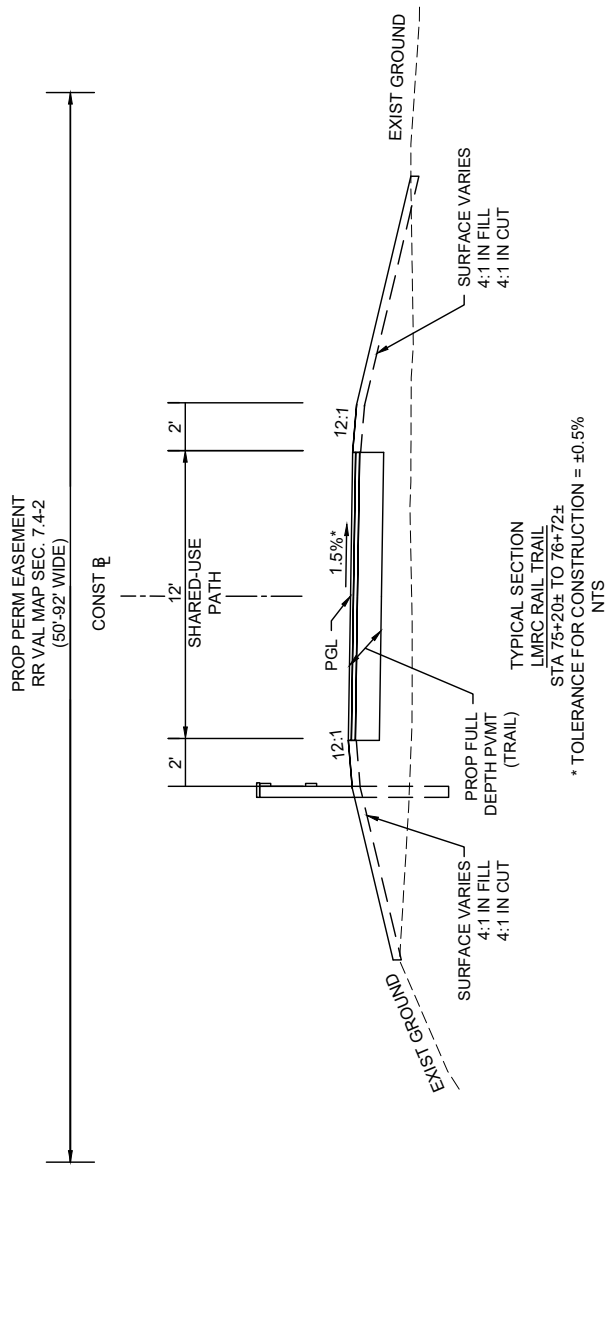

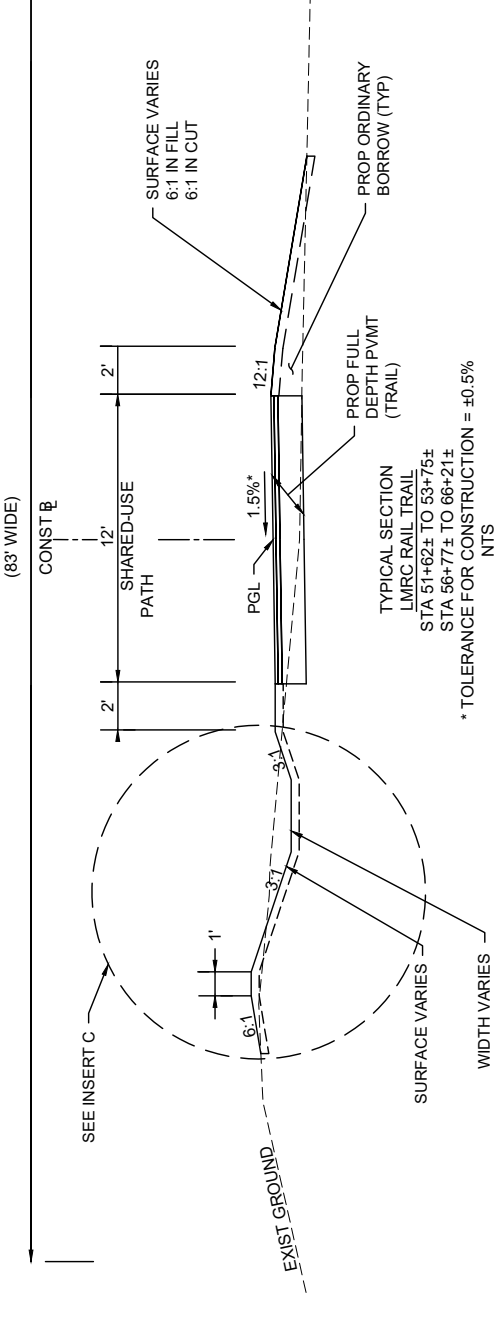

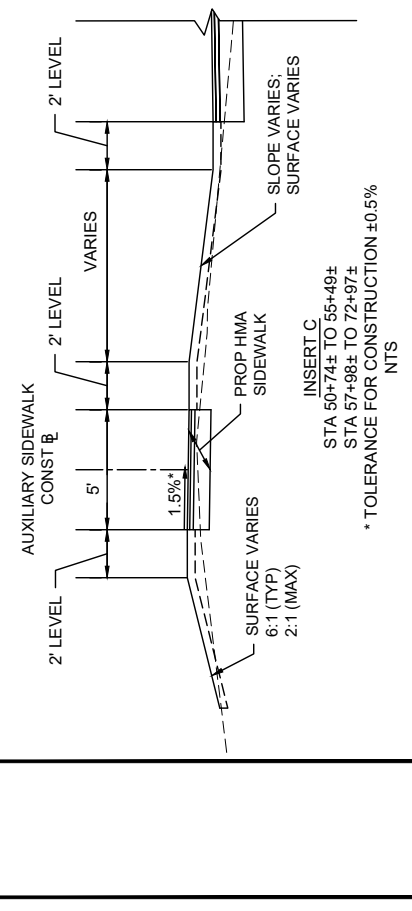

LAWRENCE
LMRC RAIL TRAIL

STATE	FED. AID PROJ. NO.	SHEET NO.	TOTAL SHEETS
MA	-	6	21
PROJECT FILE NO.	608930		

TYPICAL SECTIONS & PAVEMENT NOTES - 3 OF 3

608930_HD4(TYPICAL SECTIONS) 22X34.DWG Plotted on 20-Mar-2024 3:33 PM

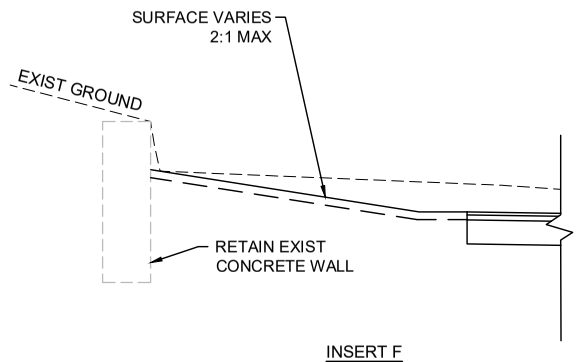

INSERT F
STA 304+15± TO 306+20±
* TOLERANCE FOR CONSTRUCTION ±0.5%
NTS

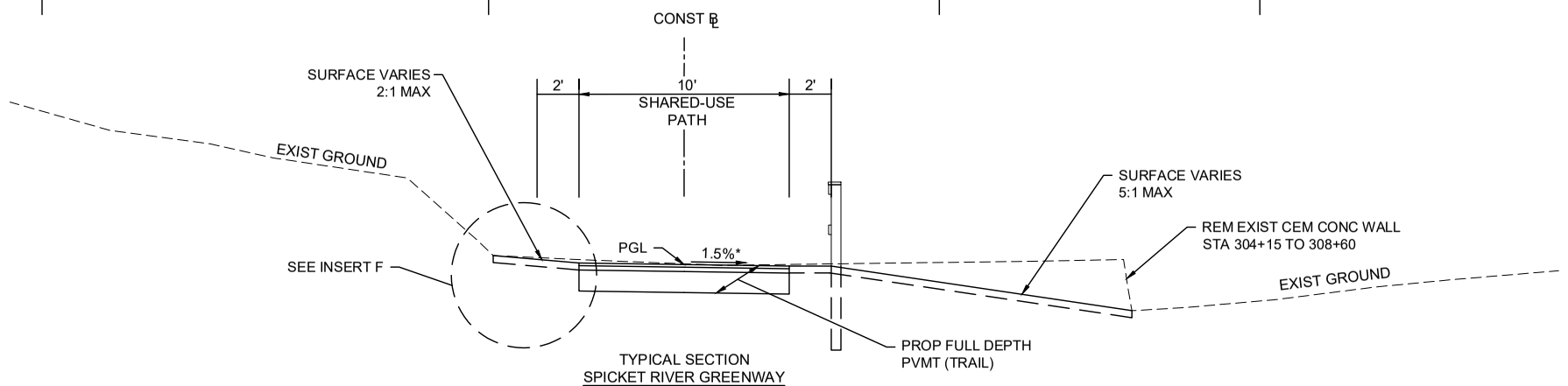

TYPICAL SECTION
SPICKET RIVER GREENWAY
STA 304+15± TO 308+60±
* TOLERANCE FOR CONSTRUCTION = ±0.5%
NTS

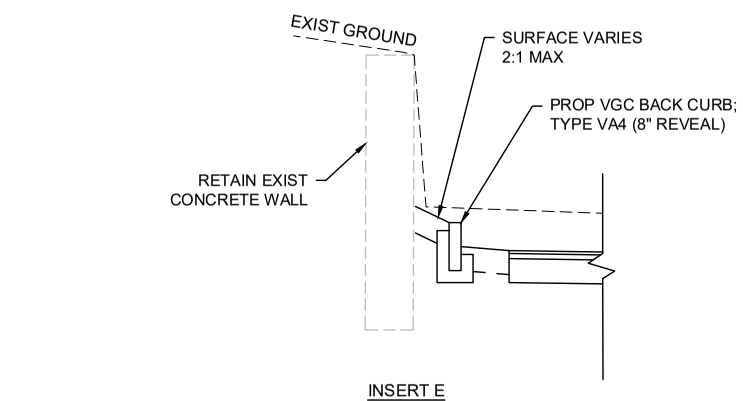

INSERT E
STA 302+63± TO 304+13±
* TOLERANCE FOR CONSTRUCTION ±0.5%
NTS

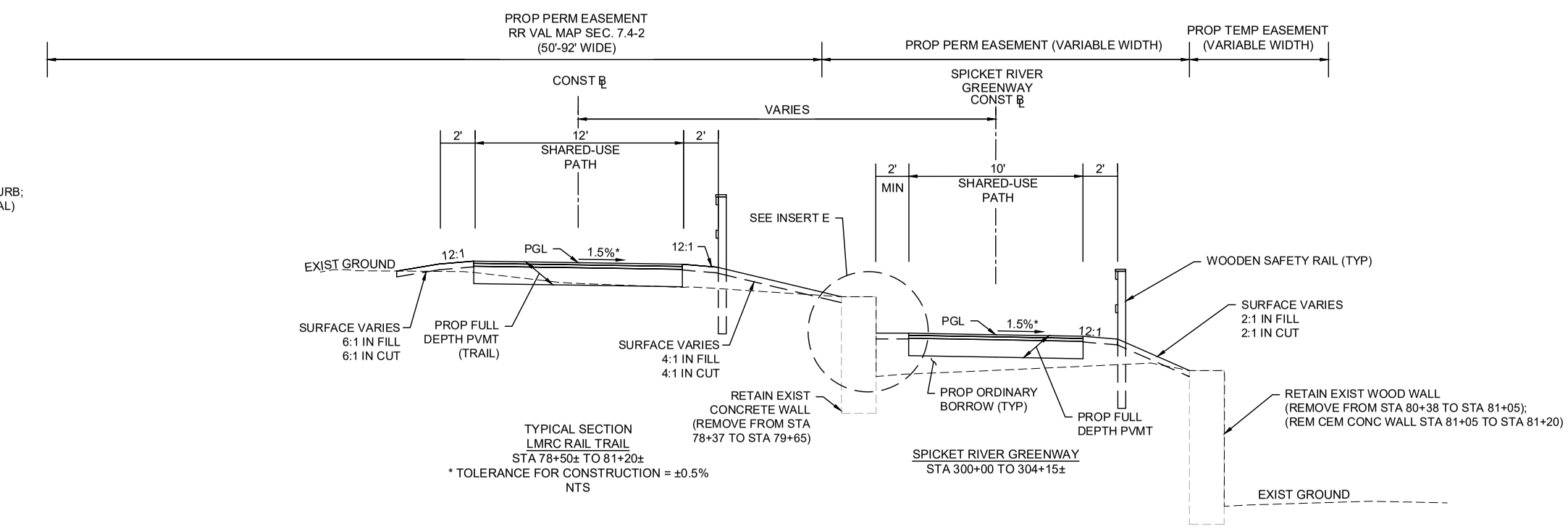

TYPICAL SECTION
LMRC RAIL TRAIL
STA 78+50± TO 81+20±
* TOLERANCE FOR CONSTRUCTION = ±0.5%
NTS

SPICKET RIVER GREENWAY
STA 300+00 TO 304+15±

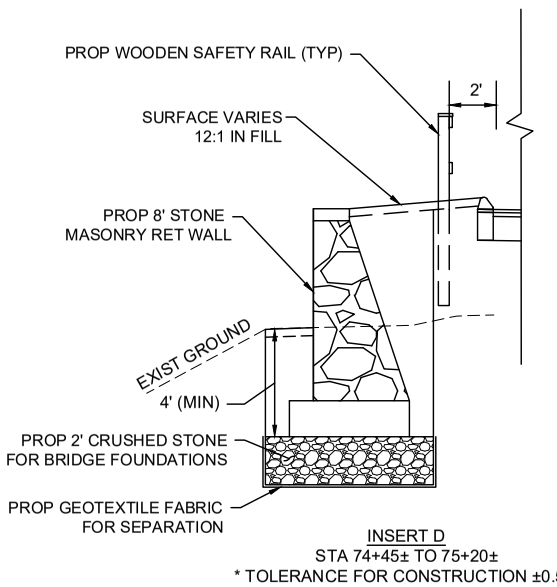

INSERT D
STA 74+45± TO 75+20±
* TOLERANCE FOR CONSTRUCTION ±0.5%

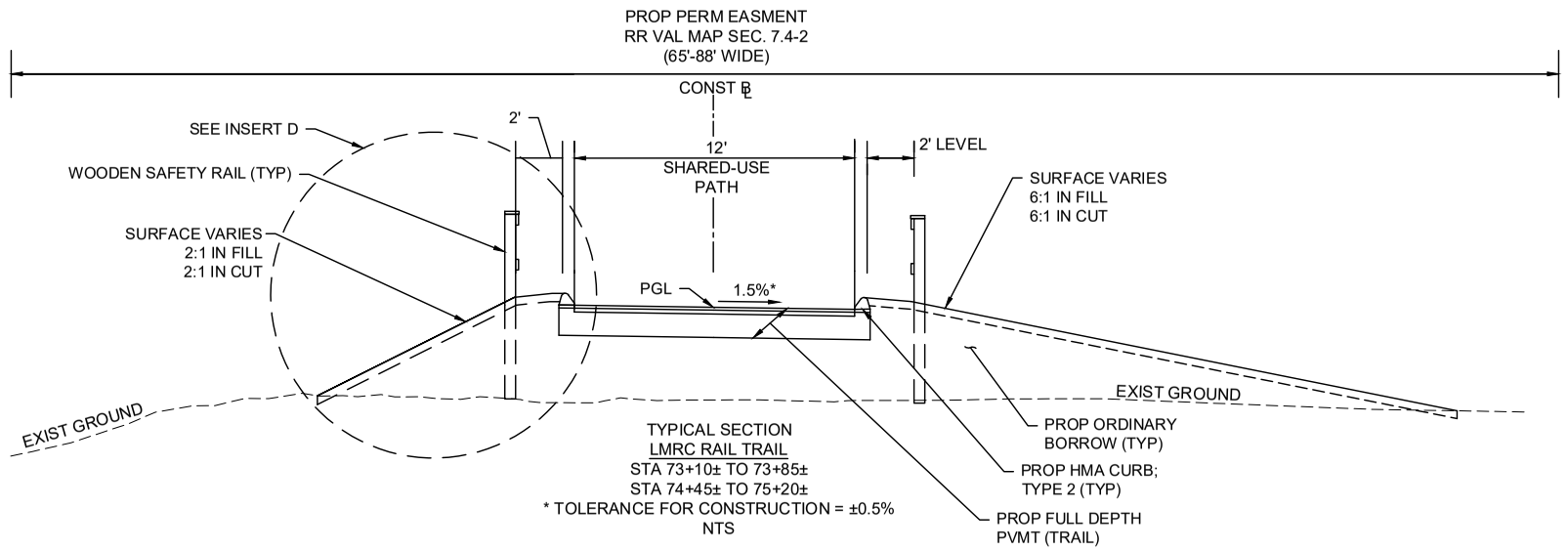

TYPICAL SECTION
LMRC RAIL TRAIL
STA 73+10± TO 73+85±
STA 74+45± TO 75+20±
* TOLERANCE FOR CONSTRUCTION = ±0.5%
NTS

LAWRENCE
LMRC RAIL TRAIL

STATE	FED. AID PROJ. NO.	SHEET NO.	TOTAL SHEETS
MA	-	7	21
PROJECT FILE NO.	608930		

CONSTRUCTION PLANS - 1 OF 15

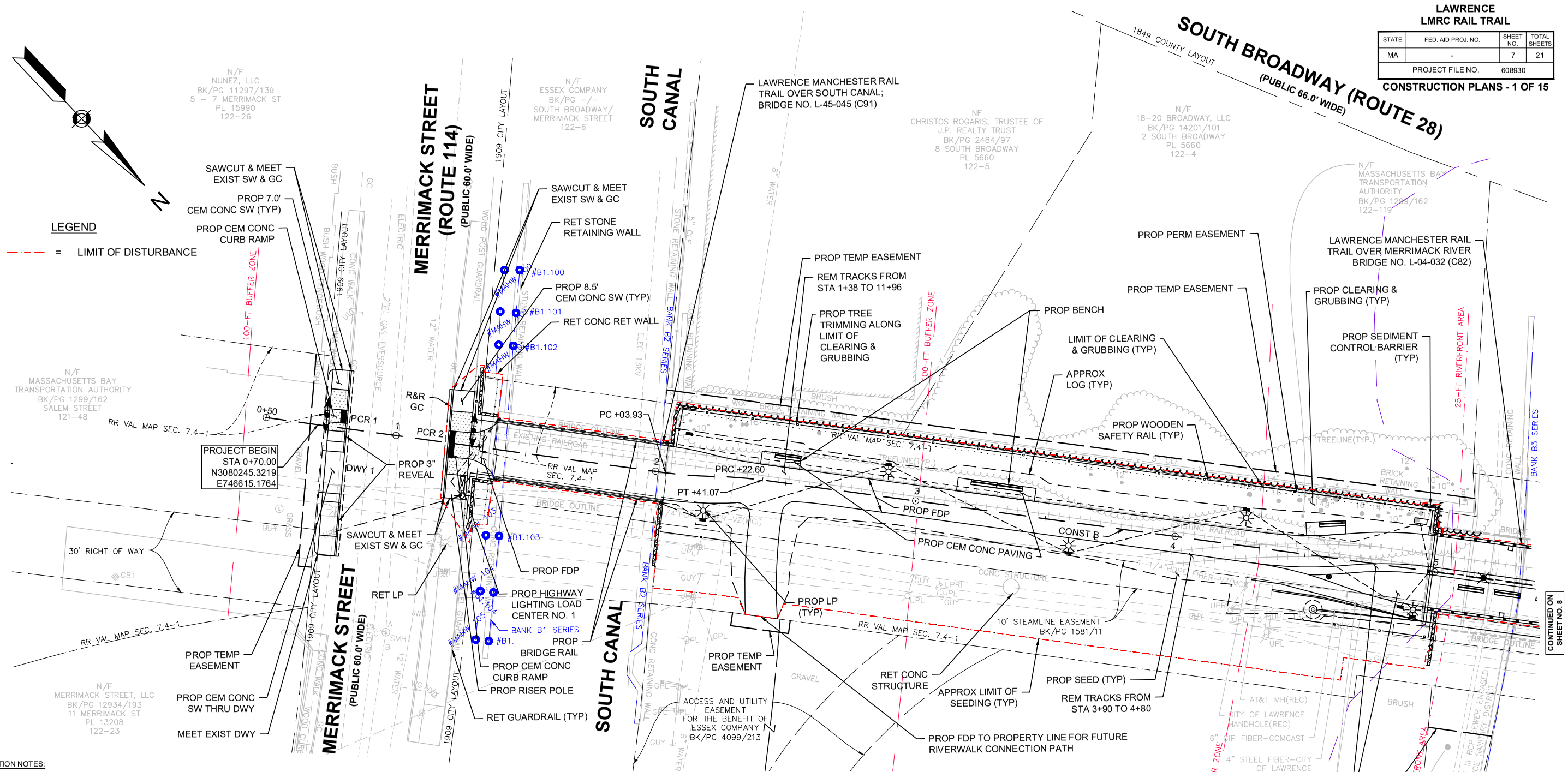

CONTINUED ON SHEET NO. 8

CONSTRUCTION NOTES:

1. EXISTING CONDITIONS INFORMATION COMPILED FROM AN ON-THE-GROUND INSTRUMENT SURVEY PERFORMED BY GREENMAN-PEDERSON, INC. IN JANUARY & FEBRUARY, 2017 AND SUPPLEMENTED IN JANUARY, 2022.

   HORIZONTAL DATUM = NAD83 (MASSACHUSETTS STATE PLANE COORDINATES)
   VERTICAL DATUM = NAVD88

2. ALL EXISTING STATE, COUNTY, AND TOWN LOCATION LINES HAVE BEEN ESTABLISHED FROM AN ACTUAL ON-THE-GROUND SURVEY. ALL PRIVATE PROPERTY LINES HAVE BEEN ESTABLISHED FROM AVAILABLE INFORMATION AND THEIR EXACT LOCATION ARE NOT GUARANTEED.

3. THE LOCATIONS OF EXISTING UNDERGROUND UTILITIES ARE SHOWN IN AN APPROXIMATE WAY ONLY AND HAVE NOT BEEN INDEPENDENTLY VERIFIED BY THE OWNER OR ITS REPRESENTATIVE. THE CONTRACTOR SHALL CONTACT DIGSAFE (1-888-DIGSAFE) A MINIMUM OF 72 HOURS PRIOR TO ANY CONSTRUCTION TO VERIFY THE LOCATION OF ALL EXISTING UTILITIES BEFORE COMMENCING WORK, AND SHALL BE FULLY RESPONSIBLE FOR ANY AND ALL DAMAGES WHICH MIGHT BE OCCASIONED BY THE CONTRACTOR'S FAILURE TO LOCATE AND PRESERVE ANY AND ALL UNDERGROUND UTILITIES.

4. WHERE AN EXISTING UTILITY IS FOUND TO CONFLICT WITH THE PROPOSED WORK, THE LOCATION, ELEVATION AND SIZE OF THE UTILITY SHALL BE ACCURATELY DETERMINED WITHOUT DELAY BY THE CONTRACTOR, AND THE INFORMATION FURNISHED TO THE ENGINEER FOR RESOLUTION OF THE CONFLICT.

5. ALL MUNICIPALLY OWNED UTILITY STRUCTURES (CATCH BASINS, DRAIN MANHOLES, ELECTRIC MANHOLES, ELECTRIC HANDHOLES, PULL BOXES, WATER GATES, ETC.) SHALL BE ADJUSTED BY THE CONTRACTOR TO FINISHED GRADE UNLESS DIRECTED OTHERWISE. THE CONTRACTOR SHALL COORDINATE WITH THE LAWRENCE DEPARTMENT OF PUBLIC WORKS (LDPW) TO ALLOW FOR THE REPLACEMENT OF EXISTING UTILITY STRUCTURES IN POOR CONDITION. THESE REPLACEMENT UTILITY STRUCTURES TO BE PROVIDED AND INSTALLED BY THE DPW.

6. ALL PRIVATELY OWNED UTILITY STRUCTURES (GAS GATES, ELECTRIC /TELEPHONE MANHOLES, ETC.) SHALL BE ADJUSTED TO FINISHED GRADE BY THE PRIVATE UTILITY COMPANY, UNLESS DIRECTED OTHERWISE. THE CONTRACTOR SHALL COORDINATE WITH PRIVATE UTILITY COMPANIES FOR THE ALTERATION AND ADJUSTMENT, AS NECESSARY.

7. PROPOSED LATERAL DRAIN PIPES SHALL BE INSTALLED WITH A PITCH OF 1.0% (MINIMUM) UNLESS OTHERWISE NOTED OR DIRECTED.

8. AREAS OUTSIDE THE LIMITS OF PROPOSED WORK DISTURBED BY THE CONTRACTOR'S OPERATIONS SHALL BE RESTORED BY THE CONTRACTOR TO THEIR ORIGINAL CONDITION AT THE CONTRACTORS EXPENSE.

9. ALL DISTURBED AREAS OUTSIDE THE CURBLINE SHALL BE STABILIZED WITH SEEDING, UNLESS OTHERWISE NOTED.

10. THE TERM "PROPOSED" (PROP) MEANS WORK TO BE CONSTRUCTED USING NEW MATERIALS OR, WHERE APPLICABLE, RE-USING EXISTING MATERIALS IDENTIFIED AS "REMOVE AND RESET" (R&R), AS APPROVED BY THE ENGINEER.

11. THE TERM "MEET EXIST" MEANS TO MEET BOTH THE EXISTING ALIGNMENT AND ELEVATION.

12. ALL EXISTING TREES WITHIN THE PROJECT LIMITS SHALL BE RETAINED AND PROTECTED WITH TREE PROTECTION UNLESS INDICATED OTHERWISE ON THE DRAWINGS. ALL PROVIDED DIMENSIONS REFER TO THE DIAMETER AT BREAST HEIGHT.

13. AN UNOBSTRUCTED PATH OF TRAVEL WITH A MINIMUM WIDTH OF 3'-0" (EXCLUDING THE WIDTH OF CURB) SHALL BE MAINTAINED PAST ALL OBSTRUCTIONS (UTILITY POLES, LIGHT POLES, SIGNS, MAILBOXES, ALONG DRIVEWAY OPENINGS, ETC.)

14. ALL RAILROAD TRACKS AND TIMBER SHALL BE REMOVED WITHIN PROJECT LIMITS.

15. DETECTABLE WARNING PANELS ARE REQUIRED ON ALL PROPOSED PEDESTRIAN CURB RAMPS AND SHALL BE INSTALLED IN ACCORDANCE WITH MASSDOT CONSTRUCTION STANDARDS.

16. LMRC RAIL TRAIL A AND LMRC TRAIL B CONSTRUCTION BASELINES DO NOT HAVE CONTINUOUS STATIONING.

17. EXISTING OR PROPOSED STRUCTURES TO BE ADJUSTED WITHIN PEDESTRIAN CURB RAMPS SHALL BE CAREFULLY ADJUSTED SUCH THAT THE TOPMOST SURFACE OR STRUCTURE COVER SHALL BE FLUSH WITH THE FINAL PEDESTRIAN CURB RAMP SURFACE.

18. EXISTING FENCES WITHIN MBTA RIGHT OF WAY SHALL BE REMOVED AND STACKED UNLESS INDICATED OTHERWISE ON THE DRAWINGS. FENCES NOT REQUIRED TO BE SET OR STACKED WILL BECOME THE PROPERTY OF CONTRACT AND REMOVED AND PROPERTY DISCARDED BY CONTRACT.

19. IN AREAS OF PROPOSED 12" EXCAVATION OR EXISTING ROADWAY / SIDEWALK WHERE LOAM AND SEED IS PROPOSED, THE CONTRACTOR SHALL REMOVE EXISTING ROADWAY / SIDEWALK AND SUBBASE, AND REPLACE WITH SUITABLE EXCAVATED MATERIAL OR ORDINARY BORROW AND PROPOSED SEED TO MEET FINAL GRADE.

608930_HDS\CONSTRUCTION PLANS\ 22X34_RECOVER.DWG Plotted on 21-Mar-2024 4:06 PM

Proposal No. 608930-128034

608930_HDS(CONSTRUCTION PLANS) 22X34_RECOVER.DWG Plotted on 21-Mar-2024 4:08 PM

LAWRENCE
LMRC RAIL TRAIL

STATE	FED. AID PROJ. NO.	SHEET NO.	TOTAL SHEETS
MA	-	8	21
PROJECT FILE NO.	608930		

CONSTRUCTION PLANS - 2 OF 15

LEGEND

= LIMIT OF DISTURBANCE

SOUTH BROADWAY (ROUTE 28)
(PUBLIC 66.0' WIDE)

1849 COUNTY LAYOUT

1849 COUNTY LAYOUT

MERRIMACK RIVER <<<

MERRIMACK RIVER <<<

CONTINUED ON SHEET NO. 9

CONTINUED ON SHEET NO. 7

PROP SPECIALTY PAVERS
PROP CLEARING & GRUBBING
PROP WOODEN SAFETY RAIL (TYP)
PROP PERM EASEMENT
APPROX LOG (TYP)
PROP SEED (TYP)
PROP TEMP EASEMENT
PROP SEATING
PROP TEMP EASEMENT
PROP BRIDGE RAILING
PROP SPECIALTY PAVERS
PROP LP (TYP)
PROP SURFACE-MOUNTED STACKED TIMBER SEATING PLATFORM-MANUFACTURED
RELOCATED UTILITIES
PROP HMA BRIDGE SURFACE
PROP PERM EASEMENT
REM TRACKS FROM STA 1+38 TO 11+96
PROP TEMP EASEMENT
PROP TREE TRIMMING ALONG LIMIT OF CLEARING & GRUBBING
PROP CLEARING & GRUBBING
RET CONC RETAINING WALL
PROP SEDIMENT CONTROL BARRIER (TYP)
PROP TEMP EASEMENT
LAWRENCE MANCHESTER RAIL TRAIL OVER MERRIMACK RIVER BRIDGE NO. L-04-032 (C82)

RR VAL MAP SEC. 7.4-1
EXISTING RAILROAD
BRIDGE OUTLINE
BANK B4 SERIES
BANK B3 SERIES
STONE WALL
CONC RETAINING WALL
BRUSH
N/F MASSACHUSETTS BAY TRANSPORTATION AUTHORITY BK/PG 1299/162 MERRIMACK STREET 122-19
N/F ESSEX COMPANY BK/PG -/- ESSEX ST 124-1
N/F MASSACHUSETTS ELECTRIC COMPANY BK/PG 1011/438 BROADWAY 143-23
VZ(MCI) HANDHOLE(REC)
GREATER LAWRENCE SANITARY DISTRICT SEWER EASEMENT BK/PG 1219/303
100-FT BUFFER ZONE
25-FT RIVERFRONT AREA
10' STEAMLINE EASEMENT BK/PG 1581/11
6" CIP FIBER-COMCAST
2-6" FRE FIBER-AT&T
2" STEEL FIBER (MCI)
4" STEEL FIBER-CITY OF LAWRENCE
6" OVER 24" STEEL STEAM
APPROX. LOCATION 96" CLASS III RCP SEWER ENCASED IN CONC. GREATER LAWRENCE SANITARY DISTRICT
N/F ESSEX COMPANY BK/PG -/- PARKER STREET 103-3
CONST B
10" 12" 8"

0 20 50 100

N

6089301_HDS(CONSTRUCTION PLANS) 22X34_RECOVER.DWG Plotted on 21-Mar-2024 4:09 PM

LAWRENCE
LMRC RAIL TRAIL

STATE	FED. AID PROJ. NO.	SHEET NO.	TOTAL SHEETS
MA	-	9	21
PROJECT FILE NO.		608930	

CONSTRUCTION PLANS - 3 OF 15

LEGEND

PCR # = PEDESTRIAN CURB RAMP NUMBER

DWY # = DRIVEWAY NUMBER

= LIMIT OF DISTURBANCE

CONTINUED ON SHEET NO. 10

CONTINUED ON SHEET NO. 8

608930_HDS(CONSTRUCTION PLANS) 22X34_RECOVER.DWG Plotted on 21-Mar-2024 4:10 PM

LAWRENCE
LMRC RAIL TRAIL

STATE	FED. AID PROJ. NO.	SHEET NO.	TOTAL SHEETS
MA	-	10	21
PROJECT FILE NO.		608930	

CONSTRUCTION PLANS - 4 OF 15

LEGEND
= LIMIT OF DISTURBANCE

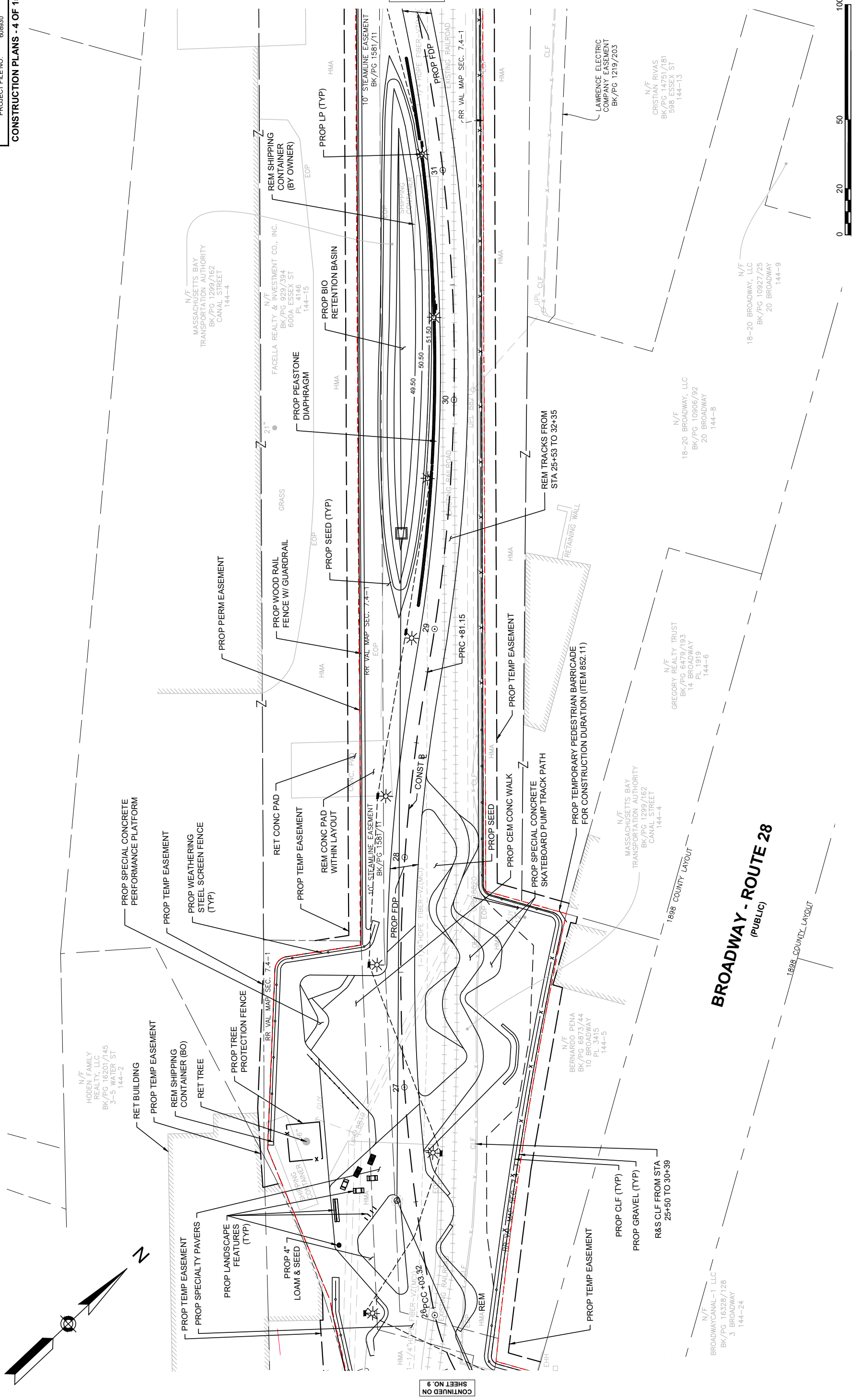

LAWRENCE
LMRC RAIL TRAIL

STATE	FED. AID PROJ. NO.	SHEET NO.	TOTAL SHEETS
MA	-	11	21
PROJECT FILE NO.	608930		

CONSTRUCTION PLANS - 5 OF 15

LEGEND

PCR # = PEDESTRIAN CURB RAMP NUMBER

DWY # = DRIVEWAY NUMBER

= LIMIT OF DISTURBANCE

608930_HDS\CONSTRUCTION PLANS\22X34_RECOVER.DWG Plotted on 21-Mar-2024 4:12 PM

Proposal No. 608930-128034

A00830 - 26

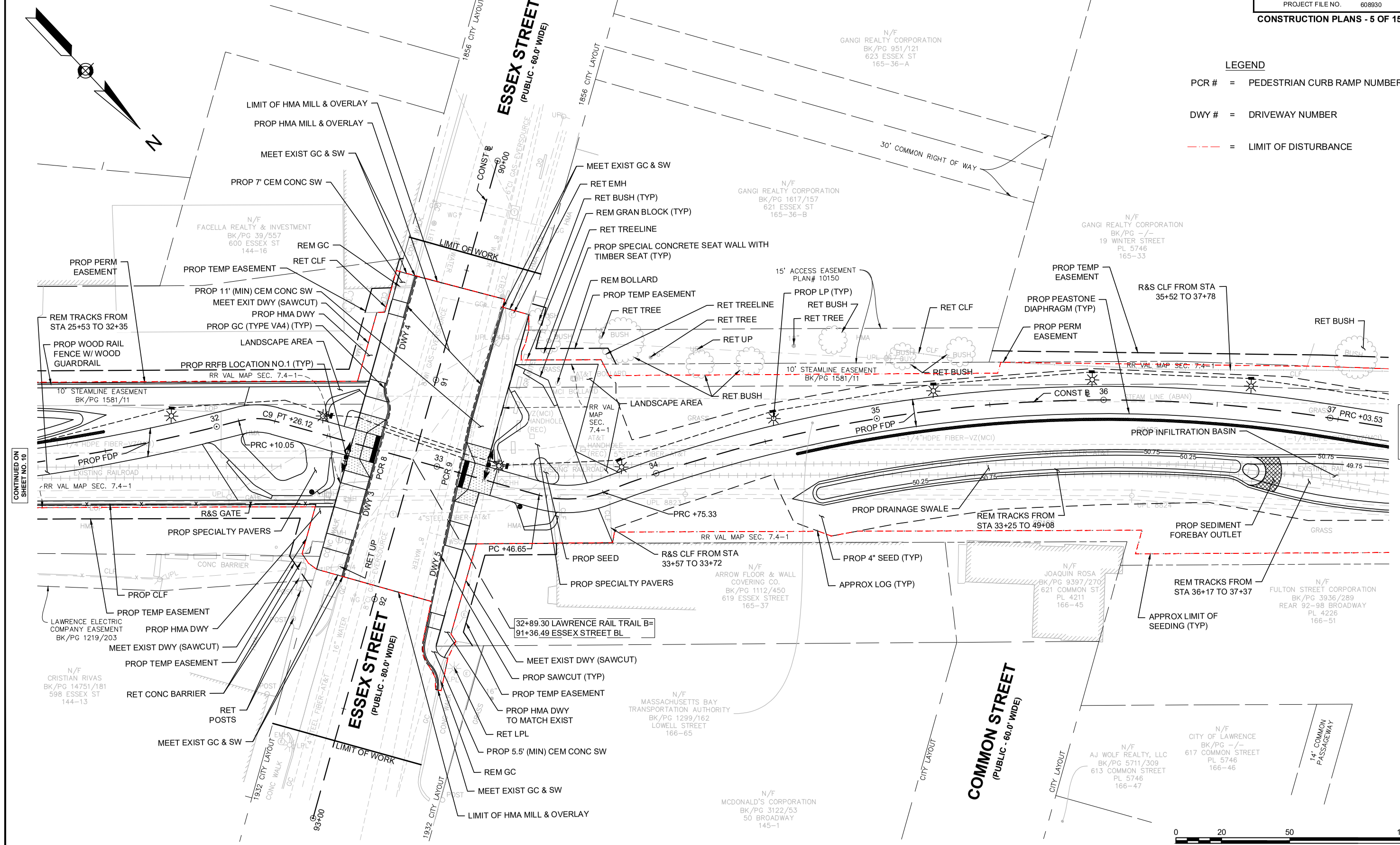

LAWRENCE
LMRC RAIL TRAIL

STATE	FED. AID PROJ. NO.	SHEET NO.	TOTAL SHEETS
MA	-	12	21
PROJECT FILE NO.	608930		

CONSTRUCTION PLANS - 6 OF 15

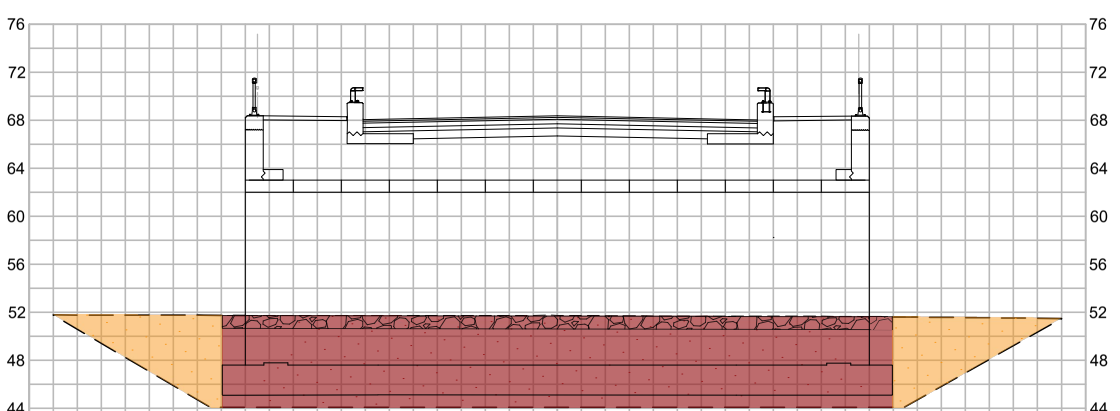

SECTION A-A
SCALE: 1" = 8'

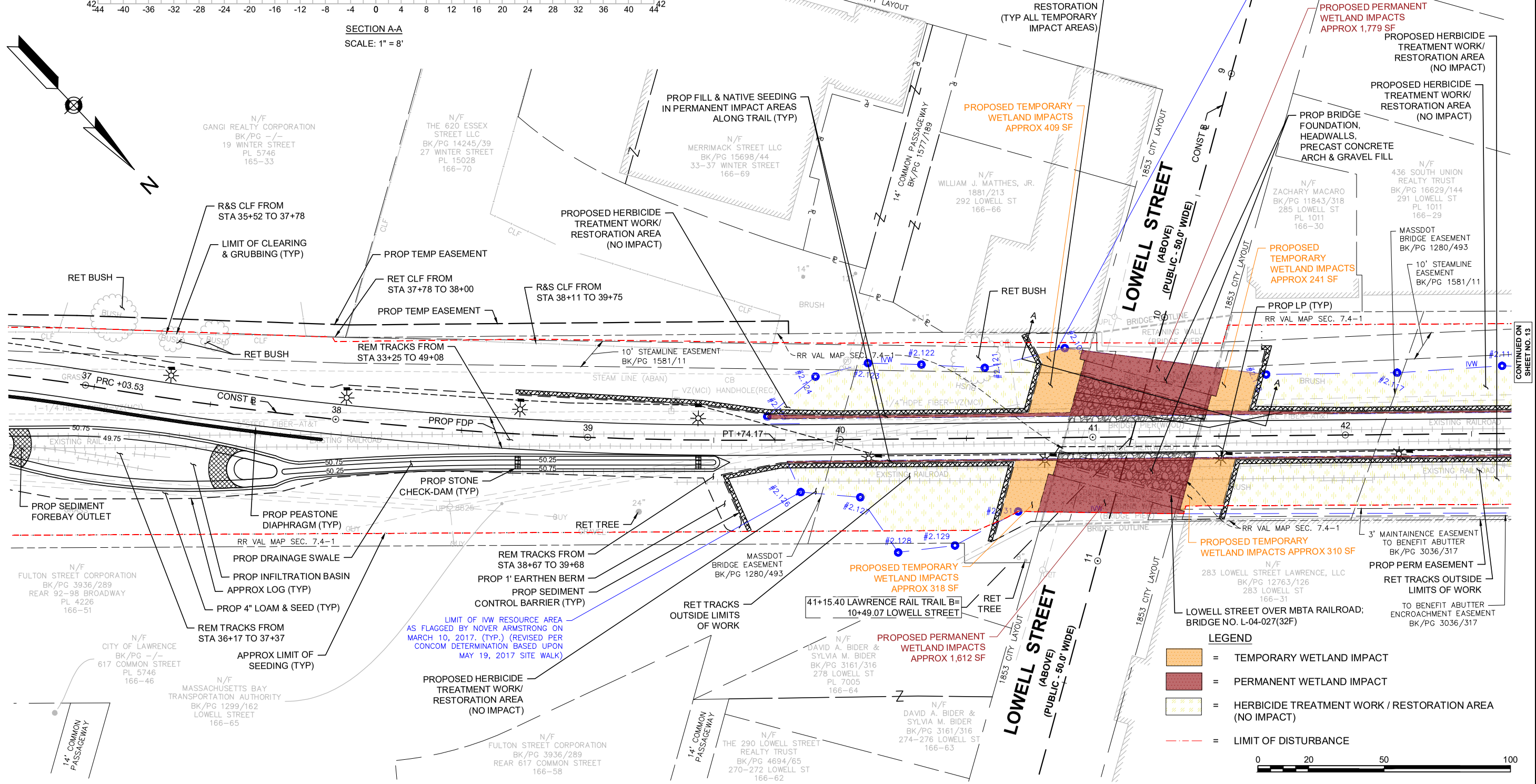

Plotted on 21-Mar-2024 4:14 PM
608930_HDS\CONSTRUCTION PLANS\22X34_RECOVER.DWG

Proposal No. 608930-128034

A00830 - 27

608930_HDS(CONSTRUCTION PLANS) 22X34_RECOVER.DWG Plotted on 21-Mar-2024 4:16 PM

LAWRENCE
LMRC RAIL TRAIL

STATE	FED. AID PROJ. NO.	SHEET NO.	TOTAL SHEETS
MA	-	13	21
PROJECT FILE NO. 608930			

CONSTRUCTION PLANS - 7 OF 15

LEGEND

= PERMANENT WETLAND IMPACT

= WETLAND MITIGATION

= HERBICIDE TREATMENT / RESTORATION AREA (NO IMPACT)

= LIMIT OF DISTURBANCE

CONTINUED ON SHEET NO. 14

CONTINUED ON SHEET NO. 12

N

0 20 50 100

RET TREE

PROP TREE PROTECTION FENCE

PROP CLEARING & GRUBBING (TYP)

PROP TREE TRIMMING ALONG LIMIT OF CLEARING & GRUBBING

PROPOSED WETLAND MITIGATION APPROX 360 SF

PROPOSED WETLAND MITIGATION APPROX 1,240 SF

PROPOSED WETLAND MITIGATION APPROX 380 SF

PROPOSED PERMANENT WETLAND IMPACTS APPROX 1,779 SF

PROPOSED PERMANENT WETLAND IMPACTS APPROX 1,612 SF

PROPOSED WETLAND MITIGATION APPROX 1,420 SF

PROP PERM EASEMENT

PROP SEED (TYP)

PROP SEDIMENT CONTROL BARRIER (TYP)

PROP FILL & NATIVE SEEDING IN PERMANENT IMPACT AREAS ALONG TRAIL (TYP)

PROP LP (TYP)

APPROX LOG (TYP)

REM TRACKS FROM STA 47+40 TO 49+08

FROM STA 43+64 TO 46+51

RET STONE RETAINING WALL

LIMIT OF IVW RESOURCE AREA AS FLAGGED BY NOVER ARMSTRONG ON MARCH 10, 2017. (TYP.) (REVISED PER CONCOM DETERMINATION BASED UPON MAY 19, 2017 SITE WALK)

PROPOSED HERBICIDE TREATMENT WORK / RESTORATION AREA (NO IMPACT)

REMOVE EXIST INVASIVE SPECIES

APPROX AREA OF INVASIVE SPECIES

PROPOSED HERBICIDE TREATMENT WORK/ RESTORATION AREA (NO IMPACT)

RET TRACKS OUTSIDE LIMITS OF WORK

TO BENEFIT ABUTTER ENCROACHMENT EASEMENT BK/PG 3036/317

3' MAINTAINENCE EASEMENT TO BENEFIT ABUTTER BK/PG 3036/317

3' MAINTAINENCE EASEMENT BK/PG 3036/317

MASSDOT BRIDGE EASEMENT BK/PG 1280/493

10' STEAMLINE EASEMENT BK/PG 1581/11

10' CITY STEAMLINE EASEMENT BK/PG 1581/11

11' PASSAGEWAY

CLYDE LANE (PRIVATE)

OLIVER PLACE (PRIVATE)

OLIVER PLACE (PRIVATE)

N/F LAWRENCE HOUSING AUTHORITY BK/PG -/- 33-47 MORTON ST 166-18

N/F GLADYS A. GORDON BK/PG 15802/220 21 MORTON ST 166-20

N/F DAKE, LLC BK/PG 9501/326 27-31 MORTON ST PL 4418 166-19

N/F HECTOR B. CHECO BK/PG 16108/310 17 MORTON ST 166-21

N/F MASSACHUSETTS BAY TRANSPORTATION AUTHORITY BK/PG 1299/162 HAVERHILL STREET 167-2

N/F 436 SOUTH UNION REALTY TRUST BK/PG 16629/144 291 LOWELL ST PL 1011 166-29

N/F 5-9 MILL STREET, LLC BK/PG 15947/238 135 BRADFORD 167-1

N/F MONICAH M. MARSH BK/PG 14131/253 10-14 BRADFORD PLACE 166-40

N/F CITY OF LAWRENCE BK/PG 10095/356 8 BRADFORD PLACE 166-41

N/F 283 LOWELL STREET LAWRENCE, LLC BK/PG 12763/126 283 LOWELL ST 166-31

608930_HDS(CONSTRUCTION PLANS) 22X34_RECOVER.DWG Plotted on 21-Mar-2024 4:17 PM

LAWRENCE
LMRC RAIL TRAIL

STATE	FED. AID PROJ. NO.	SHEET NO.	TOTAL SHEETS
MA	-	14	21
PROJECT FILE NO.	608930		

CONSTRUCTION PLANS - 8 OF 15

LEGEND

PCR # = PEDESTRIAN CURB RAMP NUMBER

DWY # = DRIVEWAY NUMBER

= WETLAND MITIGATION

= LIMIT OF DISTURBANCE

CONTINUED ON SHEET NO. 15

CONTINUED ON SHEET NO. 13

608930_HDS(CONSTRUCTION PLANS) 22X34_RECOVER.DWG Plotted on 21-Mar-2024 4:18 PM

LAWRENCE
LMRC RAIL TRAIL

STATE	FED. AID PROJ. NO.	SHEET NO.	TOTAL SHEETS
MA	-	15	21
PROJECT FILE NO.		608930	

CONSTRUCTION PLANS - 9 OF 15

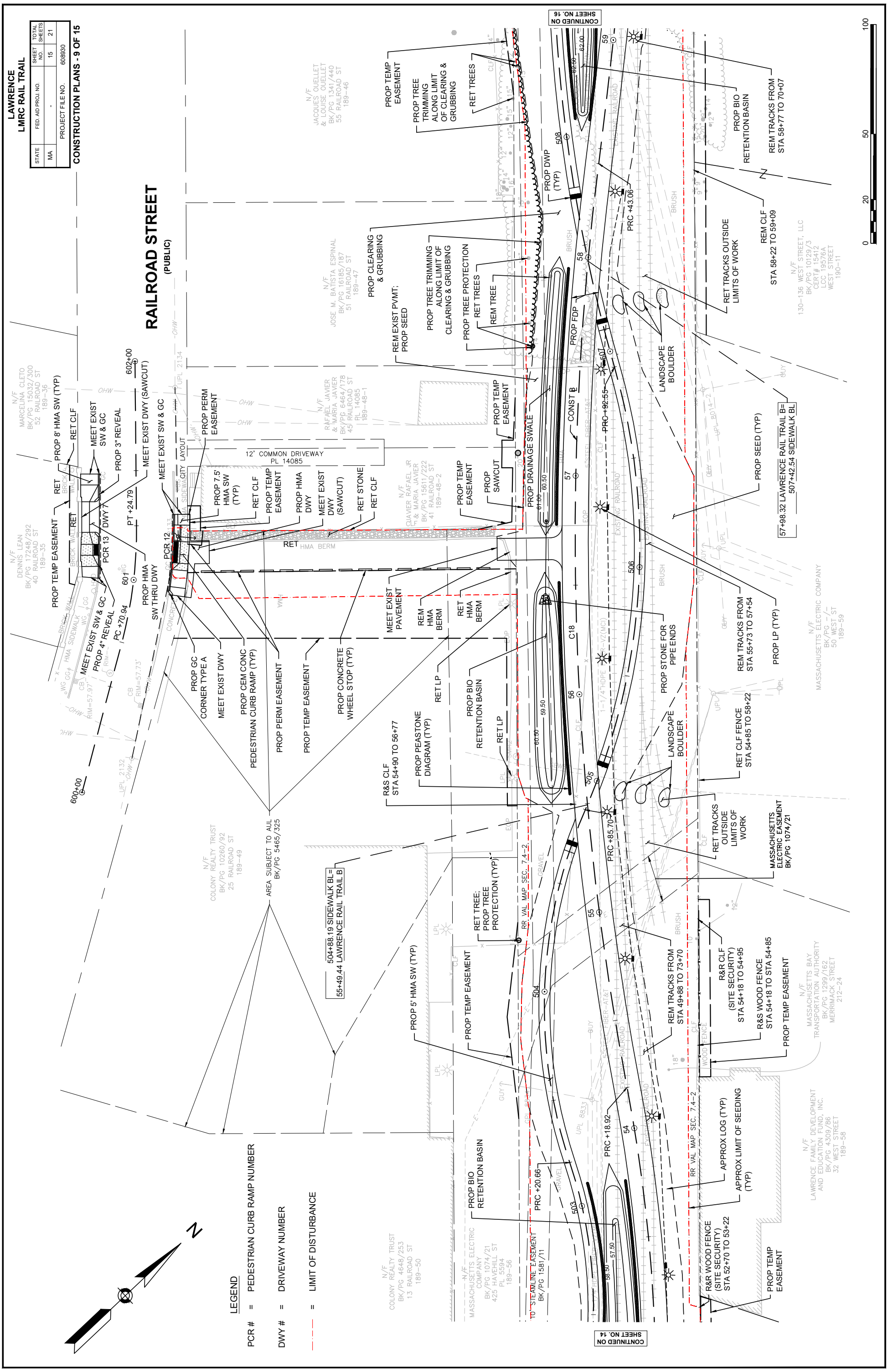

6089301_HDS(CONSTRUCTION PLANS) 22X34_RECOVER.DWG Plotted on 21-Mar-2024 4:20 PM

LAWRENCE
LMRC RAIL TRAIL

STATE	FED. AID PROJ. NO.	SHEET NO.	TOTAL SHEETS
MA	-	16	21
PROJECT FILE NO.	608930		

CONSTRUCTION PLANS - 10 OF 15

LEGEND
= LIMIT OF DISTURBANCE

RAILROAD STREET
(PUBLIC)

BOURGOIN
SQUARE PARK

CONTINUED ON SHEET NO. 17

CONTINUED ON SHEET NO. 15

608930_HDS(CONSTRUCTION PLANS) 22X34_RECOVER.DWG Plotted on 21-Mar-2024 4:21 PM

LAWRENCE
LMRC RAIL TRAIL

STATE	FED. AID PROJ. NO.	SHEET NO.	TOTAL SHEETS
MA	-	17	21
PROJECT FILE NO.	608930		

CONSTRUCTION PLANS - 11 OF 15

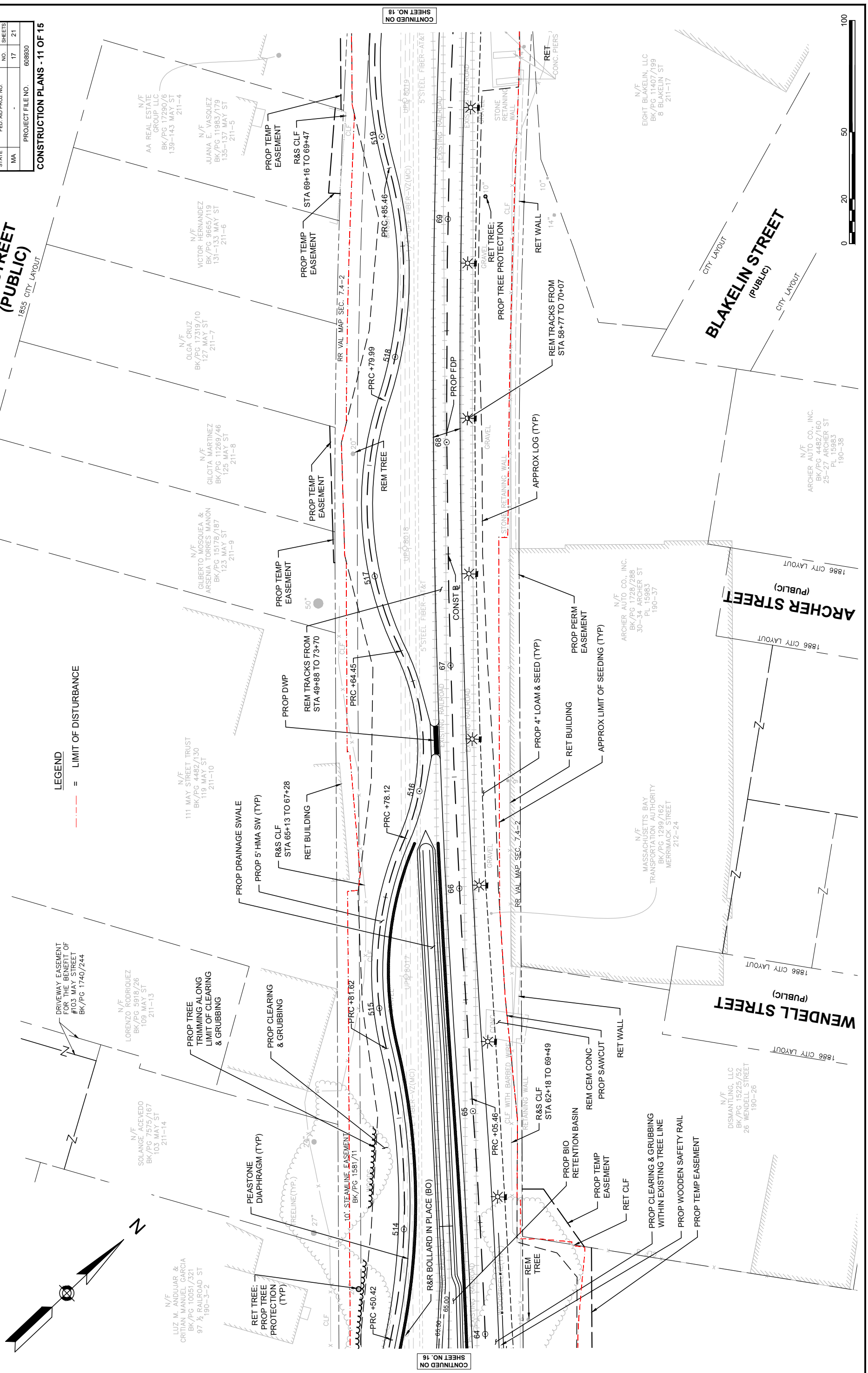

608930_HDS(CONSTRUCTION PLANS) 22X34_RECOVER.DWG Plotted on 21-Mar-2024 4:23 PM

LAWRENCE
LMRC RAIL TRAIL

STATE	FED. AID PROJ. NO.	SHEET NO.	TOTAL SHEETS
MA	-	18	21
PROJECT FILE NO.	608930		

CONSTRUCTION PLANS - 12 OF 15

LEGEND
= LIMIT OF DISTURBANCE

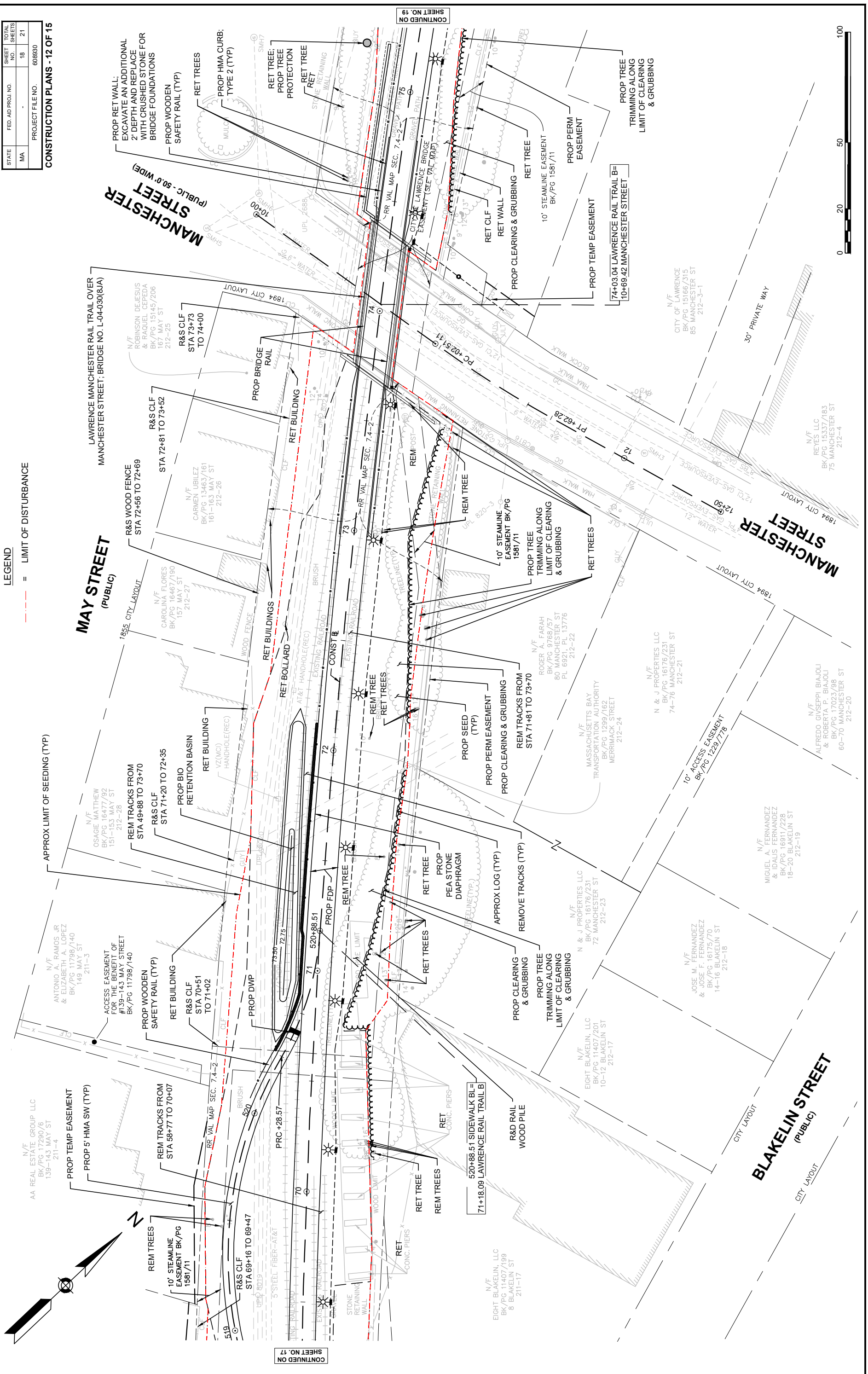

608930_HDS(CONSTRUCTION PLANS) 22X34_RECOVER.DWG Plotted on 21-Mar-2024 4:24 PM

LAWRENCE
LMRC RAIL TRAIL

STATE	FED. AID PROJ. NO.	SHEET NO.	TOTAL SHEETS
MA	-	19	21
	PROJECT FILE NO. 608930		

CONSTRUCTION PLANS - 13 OF 15

LEGEND

-·-·- = LIMIT OF DISTURBANCE

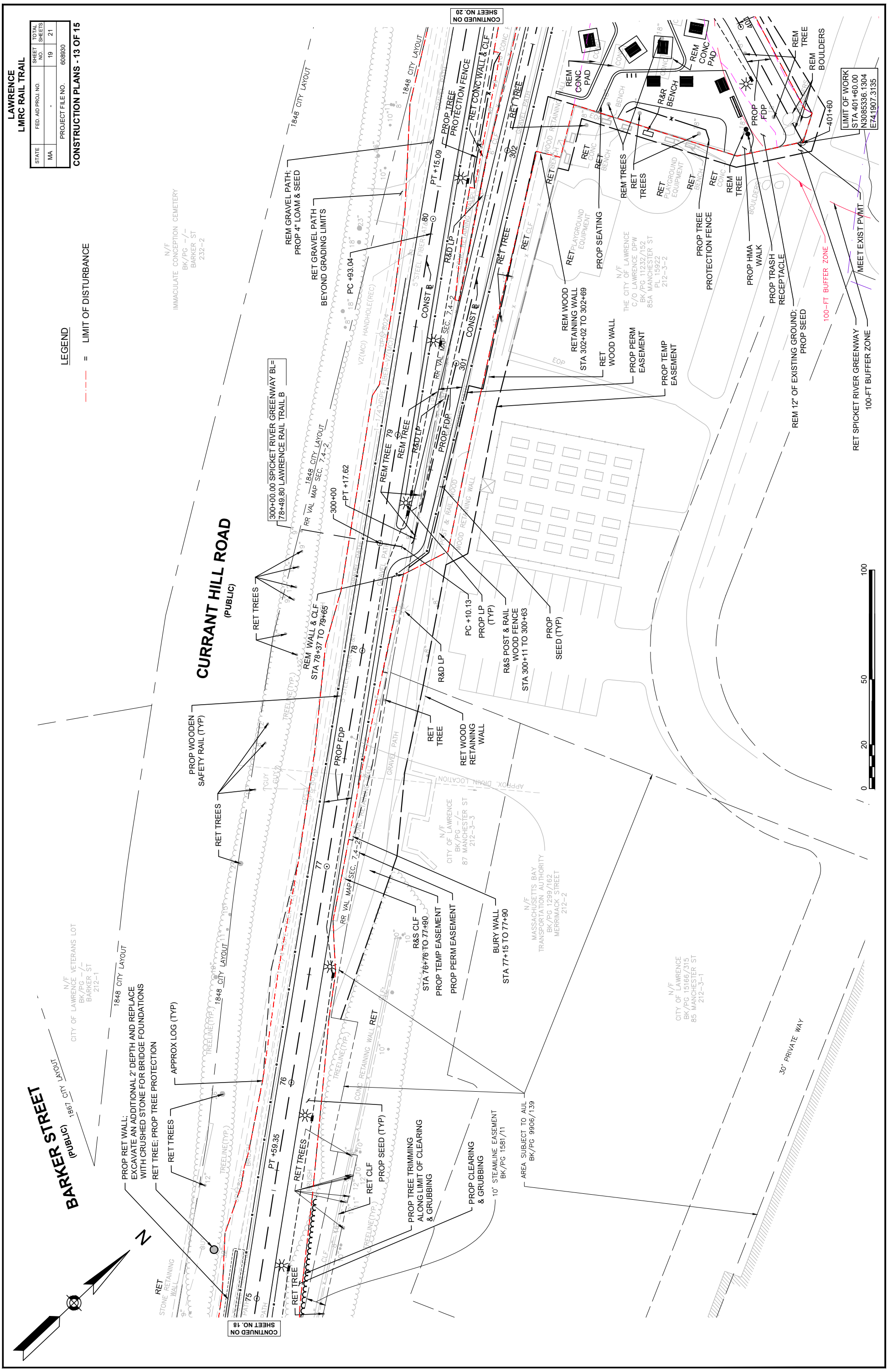

608930_HDS(CONSTRUCTION PLANS) 22X34_RECOVER.DWG Plotted on 21-Mar-2024 4:26 PM

LAWRENCE
LMRC RAIL TRAIL

STATE	FED. AID PROJ. NO.	SHEET NO.	TOTAL SHEETS
MA	-	20	21
PROJECT FILE NO.	608930		

CONSTRUCTION PLANS - 14 OF 15

LEGEND

= LIMIT OF DISTURBANCE

CURRANT HILL ROAD
(PUBLIC)

1848 CITY LAYOUT

1848 CITY LAYOUT
RR VAL MAP SEC. 7.4-2

CONTINUED ON SHEET NO. 21

CONTINUED ON SHEET NO. 19

400+00.00 MANCHESTER STREET PARK=
302+82.75 SPICKET RIVER GREENWAY BL

PROP TREE TRIMMING ALONG LIMIT OF CLEARING & GRUBBING

PROP CLEARING & GRUBBING

R&D LP

PROP SEED (TYP)

LIMIT OF CLEARING & GRUBBING (TYP)

REM GRAVEL; PROP SEED

PROP PROCESSED GRAVEL TO MEET EXIST GRAVEL PATH

PROP LP (TYP)

PROP SEDIMENT CONTROL BARRIER (TYP)

LIMIT OF RESOURCE AREA AS FLAGGED BY NOVER ARMSTRONG APPROX. 10, 2017. (TYP.)
BORDERING LAND SUBJECT TO FLOODING

#B7.107
#B7.108
#B7.109
#B7.110
#B7.111

12", SPICKET RIVER GREENWAY

PROP WOODEN SAFETY RAIL (TYP)

CEM CONC STADIUM SEATING

REM CEM CONC WALL STA 302+69 TO 307+57

R&S WOODEN FENCE STA 304+93 TO 307+16

100-FT BUFFER ZONE

N/F THE CITY OF LAWRENCE C/O LAWRENCE DPW BK/PG 11232/152 85A MANCHESTER ST PL 15922 212-3-2

N/F MASSACHUSETTS BAY TRANSPORTATION AUTHORITY BK/PG 1299/162 MERRIMACK STREET 212-2

REM WOOD WALL STA 302+02 TO 302+69

REM GRAVEL PATH; PROP 4" LOAM & SEED

PROP VGC BACK CURB; TYPE VA4 (8" REVEAL) STA 302+63 TO STA 304+13

REM 12" OF EXISTING GROUND; PROP 4" LOAM & SEED

APPROX LOG (TYP)

PROP TREE PROTECTION FENCE

PROP TRASH RECEPTACLE

MEET EXIST PVMT RET SPICKET RIVER GREENWAY

REM TREE

REM BOULDERS

REM CONC PAD

PROP PERM EASEMENT

PROP TEMP EASEMENT

25-FT RIVERFRONT AREA

#B7.111
#B7.117
#B7.118
#B7.119
#B7.120
#B7.121
#B7.122
#2.100
#2.102
#2.103
#2.104
#2.105
#2.106
#2.107

LIMIT OF WORK
STA 401+60.00
N3085336.1304
E741907.3135

0 20 50 100

608930_HDS(CONSTRUCTION PLANS) 22X34_RECOVER.DWG Plotted on 21-Mar-2024 4:27 PM

LAWRENCE
LMRC RAIL TRAIL

STATE	FED. AID PROJ. NO.	SHEET NO.	TOTAL SHEETS
MA	-	21	21
PROJECT FILE NO. 608930			

CONSTRUCTION PLANS - 15 OF 15

LEGEND

= LIMIT OF DISTURBANCE

0 20 50 100

CURRANT HILL ROAD
(PUBLIC)

1848 CITY LAYOUT
1848 CITY LAYOUT
RR VAL MAP SEC. 7.4–2

SPICKET RIVER
~CITY OF LAWRENCE~
~CITY OF METHUEN~

APPROX LOG (TYP)
PROP SEED (TYP)
PROP CLEARING & GRUBBING
PROP TREE TRIMMING ALONG LIMIT OF CLEARING & GRUBBING
PROP FDP
CONST ℄
RET WALK
APPROX LOG (TYP)
25-FT RIVERFRONT AREA
LIMIT OF FDP; MEET EXIST RAIL TRAIL
PROJECT END
STA 88+45
N3085865.0513
E741310.0879
89+00
PROP TEMP EASEMENT
RET SPICKET RIVER GREENWAY
PT +94.54
PROP SEED
PROP TREE TRIMMING ALONG LIMIT OF CLEARING & GRUBBING
100-FT BUFFER ZONE
REM GRAVEL; PROP SEED
PROP CLEARING & GRUBBING
R&D LP
PROP SEDIMENT CONTROL BARRIER (TYP)
RET SPICKET RIVER GREENWAY
PROP PERM EASEMENT
LIMIT OF FDP; MEET EXIST SPICKET RIVER GREENWAY
LIMIT OF WORK
STA 309+60.00
N3085927.8764
E741526.8983
310+00
APPROX BFE/ BORDERING LAND SUBJECT TO FLOODING
LIMIT OF RESOURCE AREA AS FLAGGED BY NOVER ARMSTRONG ON MARCH 10, 2017. (TYP.)
TREELINE(TYP.)
GRAVEL PATH
BANK
GUY
N/F MASSACHUSETTS BAY TRANSPORTATION AUTHORITY BK/PG 1299/162 MERRIMACK STREET 212–2
N/F THE CITY OF LAWRENCE C/O LAWRENCE DPW BK/PG 11232/152 85A MANCHESTER ST PL 15922 212–3–2
1–1/4"HDPE FIBER–VZ(MCI)
5"STEEL FIBER–AT&T
VZ(MCI) HANDHOLE(REC)
AT&T HANDHOLE(REC)
EHH
UGL
LPL

CONTINUED ON SHEET NO. 20

Attachment C: Agency Consultations

United States Department of the Interior

FISH AND WILDLIFE SERVICE
New England Ecological Services Field Office
70 Commercial Street, Suite 300
Concord, NH 03301-5094
Phone: (603) 223-2541 Fax: (603) 223-0104

In Reply Refer To:
Project Code: 2024-0023667
Project Name: Lawrence Rail Trail

December 06, 2023

Subject: List of threatened and endangered species that may occur in your proposed project location or may be affected by your proposed project

To Whom It May Concern:

Updated 4/12/2023 - Please review this letter each time you request an Official Species List, we will continue to update it with additional information and links to websites may change.

About Official Species Lists

The purpose of the Act is to provide a means whereby threatened and endangered species and the ecosystems upon which they depend may be conserved. Federal and non-Federal project proponents have responsibilities under the Act to consider effects on listed species.

The enclosed species list identifies threatened, endangered, proposed, and candidate species, as well as proposed and final designated critical habitat, that may occur within the boundary of your proposed project and/or may be affected by your proposed project. The species list fulfills the requirements of the U.S. Fish and Wildlife Service (Service) under section 7(c) of the Endangered Species Act (Act) of 1973, as amended (16 U.S.C. 1531 et seq.).

New information based on updated surveys, changes in the abundance and distribution of species, changed habitat conditions, or other factors could change this list. Please note that under 50 CFR 402.12(e) of the regulations implementing section 7 of the Act, the accuracy of this species list should be verified after 90 days. The Service recommends that verification be completed by visiting the IPaC website at regular intervals during project planning and implementation for updates to species lists and information. An updated list may be requested by returning to an existing project's page in IPaC.

Endangered Species Act Project Review

Please visit the "**New England Field Office Endangered Species Project Review and Consultation**" website for step-by-step instructions on how to consider effects on listed

species and prepare and submit a project review package if necessary:

https://www.fws.gov/office/new-england-ecological-services/endangered-species-project-review

NOTE Please do not use the **Consultation Package Builder** tool in IPaC except in specific situations following coordination with our office. Please follow the project review guidance on our website instead and reference your **Project Code** in all correspondence.

Northern Long-eared Bat - (**Updated 4/12/2023**) The Service published a final rule to reclassify the northern long-eared bat (NLEB) as endangered on November 30, 2022. The final rule went into effect on March 31, 2023. You may utilize the **Northern Long-eared Bat Rangewide Determination Key** available in IPaC. More information about this Determination Key and the Interim Consultation Framework are available on the northern long-eared bat species page:

https://www.fws.gov/species/northern-long-eared-bat-myotis-septentrionalis

For projects that previously utilized the 4(d) Determination Key, the change in the species' status may trigger the need to re-initiate consultation for any actions that are not completed and for which the Federal action agency retains discretion once the new listing determination becomes effective. If your project was not completed by March 31, 2023, and may result in incidental take of NLEB, please reach out to our office at newengland@fws.gov to see if reinitiation is necessary.

Additional Info About Section 7 of the Act
Under section 7(a)(2) of the Act and its implementing regulations (50 CFR 402 et seq.), Federal agencies are required to determine whether projects may affect threatened and endangered species and/or designated critical habitat. If a Federal agency, or its non-Federal representative, determines that listed species and/or designated critical habitat may be affected by the proposed project, the agency is required to consult with the Service pursuant to 50 CFR 402. In addition, the Federal agency also may need to consider proposed species and proposed critical habitat in the consultation. 50 CFR 402.14(c)(1) specifies the information required for consultation under the Act regardless of the format of the evaluation. More information on the regulations and procedures for section 7 consultation, including the role of permit or license applicants, can be found in the "Endangered Species Consultation Handbook" at:

https://www.fws.gov/service/section-7-consultations

In addition to consultation requirements under Section 7(a)(2) of the ESA, please note that under sections 7(a)(1) of the Act and its implementing regulations (50 CFR 402 et seq.), Federal agencies are required to utilize their authorities to carry out programs for the conservation of threatened and endangered species. Please contact NEFO if you would like more information.

Candidate species that appear on the enclosed species list have no current protections under the ESA. The species' occurrence on an official species list does not convey a requirement to

consider impacts to this species as you would a proposed, threatened, or endangered species. The ESA does not provide for interagency consultations on candidate species under section 7, however, the Service recommends that all project proponents incorporate measures into projects to benefit candidate species and their habitats wherever possible.

Migratory Birds

In addition to responsibilities to protect threatened and endangered species under the Endangered Species Act (ESA), there are additional responsibilities under the Migratory Bird Treaty Act (MBTA) and the Bald and Golden Eagle Protection Act (BGEPA) to protect native birds from project-related impacts. Any activity, intentional or unintentional, resulting in take of migratory birds, including eagles, is prohibited unless otherwise permitted by the U.S. Fish and Wildlife Service (50 C.F.R. Sec. 10.12 and 16 U.S.C. Sec. 668(a)). For more information regarding these Acts see:

https://www.fws.gov/program/migratory-bird-permit

https://www.fws.gov/library/collections/bald-and-golden-eagle-management

Please feel free to contact us at **newengland@fws.gov** with your **Project Code** in the subject line if you need more information or assistance regarding the potential impacts to federally proposed, listed, and candidate species and federally designated and proposed critical habitat.

Attachment(s): Official Species List

Attachment(s):

- Official Species List

OFFICIAL SPECIES LIST

This list is provided pursuant to Section 7 of the Endangered Species Act, and fulfills the requirement for Federal agencies to "request of the Secretary of the Interior information whether any species which is listed or proposed to be listed may be present in the area of a proposed action".

This species list is provided by:

New England Ecological Services Field Office
70 Commercial Street, Suite 300
Concord, NH 03301-5094
(603) 223-2541

PROJECT SUMMARY

Project Code: 2024-0023667
Project Name: Lawrence Rail Trail
Project Type: Recreation - Maintenance / Modification
Project Description: Converting a former railroad right of way into a public rail trail in the city of Lawrence, MA. The site is located in a primarily urban residential area with two water crossings.
Project Location:

The approximate location of the project can be viewed in Google Maps: https://www.google.com/maps/@42.70768715,-71.17372352986192,14z

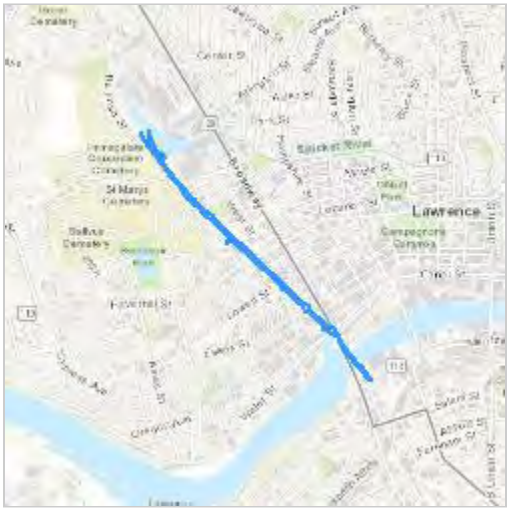

Counties: Essex County, Massachusetts

ENDANGERED SPECIES ACT SPECIES

There is a total of 2 threatened, endangered, or candidate species on this species list.

Species on this list should be considered in an effects analysis for your project and could include species that exist in another geographic area. For example, certain fish may appear on the species list because a project could affect downstream species.

IPaC does not display listed species or critical habitats under the sole jurisdiction of NOAA Fisheries[1], as USFWS does not have the authority to speak on behalf of NOAA and the Department of Commerce.

See the "Critical habitats" section below for those critical habitats that lie wholly or partially within your project area under this office's jurisdiction. Please contact the designated FWS office if you have questions.

---

1. NOAA Fisheries, also known as the National Marine Fisheries Service (NMFS), is an office of the National Oceanic and Atmospheric Administration within the Department of Commerce.

MAMMALS

NAME	STATUS
Northern Long-eared Bat *Myotis septentrionalis* No critical habitat has been designated for this species. Species profile: https://ecos.fws.gov/ecp/species/9045	Endangered

INSECTS

NAME	STATUS
Monarch Butterfly *Danaus plexippus* No critical habitat has been designated for this species. Species profile: https://ecos.fws.gov/ecp/species/9743	Candidate

CRITICAL HABITATS

THERE ARE NO CRITICAL HABITATS WITHIN YOUR PROJECT AREA UNDER THIS OFFICE'S JURISDICTION.

YOU ARE STILL REQUIRED TO DETERMINE IF YOUR PROJECT(S) MAY HAVE EFFECTS ON ALL ABOVE LISTED SPECIES.

IPAC USER CONTACT INFORMATION

Agency: TRC Companies, Inc
Name: Isabel Mohammadi-Hall
Address: 650 Suffolk Street
City: Wannalancit Mills, Lowell
State: MA
Zip: 01854
Email imohammadi-hall@trccompanies.com
Phone: 4083185232

LEAD AGENCY CONTACT INFORMATION

Lead Agency: Federal Highway Administration
Name: Isabel Mohammadi-Hall
Email: imohammadi-hall@trccompanies.com

United States Department of the Interior

FISH AND WILDLIFE SERVICE
New England Ecological Services Field Office
70 Commercial Street, Suite 300
Concord, NH 03301-5094
Phone: (603) 223-2541 Fax: (603) 223-0104

In Reply Refer To:
Project code: 2024-0023667
Project Name: Lawrence Rail Trail

December 06, 2023

Subject: Consistency letter for the 'Lawrence Rail Trail' project under the amended February 5, 2018, FHWA, FRA, FTA Programmatic Biological Opinion (dated March 23, 2023) for Transportation Projects within the Range of the Indiana Bat and Northern Long-eared Bat (NLEB).

To whom it may concern:

The U.S. Fish and Wildlife Service (Service) has received your request dated December 06, 2023 to verify that the **Lawrence Rail Trail** (Proposed Action) may rely on the amended February 5, 2018, FHWA, FRA, FTA Programmatic Biological Opinion Opinion (dated March 23, 2023) for Transportation Projects within the Range of the Indiana Bat and Northern Long-eared Bat (PBO) to satisfy requirements under section 7(a)(2) of the Endangered Species Act of 1973 (ESA) (87 Stat.884, as amended; 16 U.S.C. 1531 *et seq.*).

Based on the information you provided (Project Description shown below), you have determined that the Proposed Action will have no effect on the endangered Indiana bat (*Myotis sodalis*) or the endangered northern long-eared bat (*Myotis septentrionalis*). If the Proposed Action is not modified, **no consultation is required for these two species.** If the Proposed Action is modified, or new information reveals that it may affect the Indiana bat and/or northern long-eared bat in a manner or to an extent not considered in the PBO, further review to conclude the requirements of ESA section 7(a)(2) may be required.

For Proposed Actions that include bridge/culvert or structure removal, replacement, and/or maintenance activities:
If your initial bridge/culvert or structure assessment failed to detect Indiana bats and/or NLEBs use or occupancy, yet later detected prior to, or during construction, please submit the Post Assessment Discovery of Bats at Bridge/Culvert or Structure Form (User Guide Appendix E) to this Service Office within 2 working days of the incident. In these instances, potential incidental take of Indiana bats and/or NLEBs may be exempted provided that the take is reported to the Service.

If the Proposed Action may affect any other federally-listed or proposed species and/or designated critical habitat, additional consultation between the lead Federal action agency and this Service Office is required. If the proposed action has the potential to take bald or golden eagles, additional coordination with the Service under the Bald and Golden Eagle Protection Act may also be required. In either of these circumstances, please advise the lead Federal action agency accordingly.

The following species may occur in your project area and **are not** covered by this determination:

- Monarch Butterfly *Danaus plexippus* Candidate

PROJECT DESCRIPTION

The following project name and description was collected in IPaC as part of the endangered species review process.

NAME

Lawrence Rail Trail

DESCRIPTION

Converting a former railroad right of way into a public rail trail in the city of Lawrence, MA. The site is located in a primarily urban residential area with two water crossings.

The approximate location of the project can be viewed in Google Maps: https://www.google.com/maps/@42.70768715,-71.17372352986192,14z

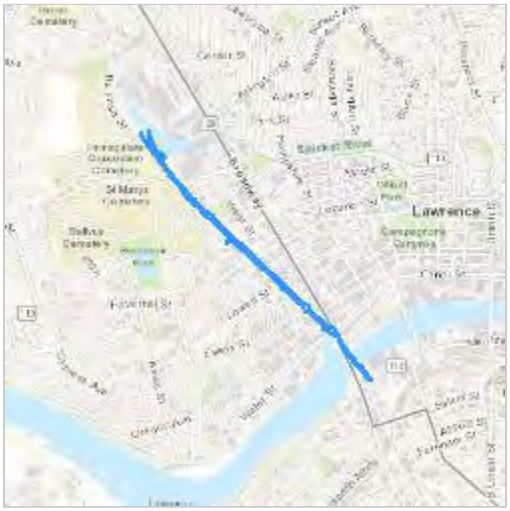

DETERMINATION KEY RESULT

Based on the information you provided, you have determined that the Proposed Action will have no effect on the endangered Indiana bat and/or the endangered northern long-eared bat. Therefore, no consultation with the U.S. Fish and Wildlife Service pursuant to Section 7(a)(2) of the Endangered Species Act of 1973 (ESA) (87 Stat. 884, as amended 16 U.S.C. 1531 *et seq.*) is required for these two species.

QUALIFICATION INTERVIEW

1. Is the project within the range of the Indiana bat[1]?

   [1] See Indiana bat species profile

   Automatically answered
   No

2. Is the project within the range of the northern long-eared bat[1]?

   [1] See northern long-eared bat species profile

   Automatically answered
   Yes

3. [Semantic] Does your proposed action intersect an area where Indiana bats and northern long-eared bats are not likely to occur?

   Automatically answered
   Yes

DETERMINATION KEY DESCRIPTION: FHWA, FRA, FTA PROGRAMMATIC CONSULTATION FOR TRANSPORTATION PROJECTS AFFECTING NLEB OR INDIANA BAT

This key was last updated in IPaC on October 30, 2023. Keys are subject to periodic revision.

This decision key is intended for projects/activities funded or authorized by the Federal Highway Administration (FHWA), Federal Railroad Administration (FRA), and/or Federal Transit Administration (FTA), which may require consultation with the U.S. Fish and Wildlife Service (Service) under Section 7 of the Endangered Species Act (ESA) for the endangered **Indiana bat** (*Myotis sodalis*) and the endangered **northern long-eared bat** (NLEB) (*Myotis septentrionalis*).

This decision key should only be used to verify project applicability with the Service's amended February 5, 2018, FHWA, FRA, FTA Programmatic Biological Opinion (dated March 23, 2023) for Transportation Projects. The programmatic biological opinion covers limited transportation activities that may affect either bat species, and addresses situations that are both likely and not likely to adversely affect either bat species. This decision key will assist in identifying the effect of a specific project/activity and applicability of the programmatic consultation. The programmatic biological opinion is not intended to cover all types of transportation actions. Activities outside the scope of the programmatic biological opinion, or that may affect ESA-listed species other than the Indiana bat or NLEB, or any designated critical habitat, may require additional ESA Section 7 consultation.

IPAC USER CONTACT INFORMATION

Agency: TRC Companies, Inc
Name: Isabel Mohammadi-Hall
Address: 650 Suffolk Street
City: Wannalancit Mills, Lowell
State: MA
Zip: 01854
Email imohammadi-hall@trccompanies.com
Phone: 4083185232

LEAD AGENCY CONTACT INFORMATION

Lead Agency: Federal Highway Administration
Name: Isabel Mohammadi-Hall
Email: imohammadi-hall@trccompanies.com

Maura Healey, Governor
Kimberley Driscoll, Lieutenant Governor
Monica Tibbits-Nutt, Acting Secretary & CEO
Jonathan L. Gulliver, Highway Administrator

MassDOT
Massachusetts Department of Transportation
Highway Division

November 7, 2023

Ms. Brona Simon
State Historic Preservation Officer
Massachusetts Historical Commission
220 Morrissey Boulevard
Boston, MA 02125

RE: Lawrence — Lawrence-Manchester Rail Corridor Rail Trail (MassDOT #608930)
Section 106 Review – No Adverse Effect
Section 4(f): Fee Taking and Permanent Easements – *de minimis* impact
Section 4(f): Temporary Occupancies – No 4(f) Use

Dear Ms. Simon:

The Massachusetts Department of Transportation (MassDOT) and the City of Lawrence propose to expend federal funds to construct a shared use path (SUP) and linear park along the former Manchester & Lawrence Railroad corridor. The SUP will extend for 1.5 miles from Merrimack Street north to the Methuen City Line, where the new shared use path will connect to the existing Methuen Rail Trail. The Lawrence Manchester Rail Corridor (LMRC) will cross the South Canal, the Merrimack River, and the North Canal on existing bridges. The corridor is currently owned by the Massachusetts Bay Transportation Authority (MBTA), except for a spur at the northerly end of the project corridor that is owned by the City.

The project's Area of Potential Effects (APE) includes several historic districts, buildings, and bridges that are either listed or eligible for listing in the National Register of Historic Places (NRHP), as described below. MassDOT has reviewed the project under the terms of the Massachusetts Statewide Programmatic Agreement for Section 106 of the National Historic Preservation Act of 1966, as amended [36 CFR Part 800.3(a)(2)], and has determined that the project will have **No Adverse Effect** on properties that are listed in or may be eligible for listing in the NRHP.

Area of Potential Effects

The project's APE includes two historic districts that are listed in the NHRP: a 600'-long segment of the LMRC passes through the **North Canal Historic District**, extending from the Merrimack River northerly to Canal Street/Water Street; a 1,500'-long segment of the LMRC abuts the **Arlington Mills Historic District**, extending from Manchester Street northerly to the Methuen City Line. Additionally, MassDOT has previously recommended **South Canal** (LAW.908), at the southerly limit of the project area, to be eligible for listing in the NRHP as a historic district. Staff at the Massachusetts Historical Commission (MHC) concurred with that recommendation. MassDOT Bridge L-04-045, the **Boston & Maine South Canal Railroad Bridge (LAW.927)**, a single-span steel deck plate girder superstructure supported on the canal walls constructed in 1907, would be a contributing property in the National Register-eligible South Canal Historic District.

The APE also includes MassDOT Bridge L-04-032, the **Manchester and Lawrence Railroad Bridge (LAW.923)** over the Merrimack River, built by the Boston & Maine Railroad in 1893. The bridge is comprised of a six-span, pin-connected Pratt deck truss superstructure supported on cut granite abutments and piers and is among the oldest of its type in Massachusetts. MHC staff determined the bridge to be eligible for listing in the NRHP in 1988 as part of the MBTA Survey. The bridge, which is currently out of service, will be retrofitted to accommodate the new shared use path.

Ten Park Plaza, Suite 4160, Boston, MA 02116
Tel: 857-368-4636, TTY: 857-368-0655
mass.gov/massdot

Two mill buildings within the APE are included in the Inventory of Historic Assets of the Commonwealth: the Levi Sprague Shuttle Co. building (**LAW.570**) at 275 Lowell Street and the Stanley Manufacturing Company building (**LAW.571**) at the corner of West Street and Haverhill Street. Both buildings have been documented for the Historic American Engineering Record and have potential to be eligible for the NRHP. Neither building will be disturbed by this project.

Project Description

The proposed work will include construction of a 12'-wide paved shared use path and linear park along the former Manchester & Lawrence Railroad corridor. The path will typically remain within the existing MBTA or City right-of-way (ROW), with most of the proposed construction of the main SUP constrained to the existing railroad bed. A 10'-wide paved curvilinear path for pedestrian use and slower bicycle traffic will meander along the LMRC between Haverhill Street and Manchester Street within the existing MBTA ROW.

North of Manchester Street, a 900'-long connector path will diverge from the main LMRC to follow the alignment of a spur track that formerly extended into the Arlington Mills millyard within the boundaries of the NRHP-listed Arlington Mills Historic District. The parcel on which the spur track is situated is now owned by the City, but no contributing buildings or structures are located on or immediately adjacent to the City parcel. The spur path will curve to the northeast to connect to the existing Spicket River Greenway. A 180'-long connector path will extend off this spur path through disturbed areas of the City-owned parcel to provide access to Manchester Street Park. The spur path will be flanked by precast concrete step seating, as well as several standard picnic tables and benches.

All remaining steel rails and timber ties will be removed from the rail beds throughout the LMRC. Overgrown vegetation along the corridor will be cleared and grubbed, with particular attention to eradication of invasive species. Any mature trees present will be retained. As there is a history of dumping in the area since the rail corridor was abandoned, any trash and other hazardous objects/ detritus present within the corridor will also be removed. Timber rail fences and timber guardrail will be installed within the corridor as necessary, to maintain appropriate safety standards.

The LMRC will generally be improved to provide a park-like feeling, with trees, shrubs and other landscaping, ornamental pedestrian-level lighting, concrete accent pavers, weathering steel accent wall features, reclaimed granite block slopes, stacked timber seating features and other seats, tables and amenities added at appropriate areas along the corridor. Improvements to drainage and subsurface conditions for paving will require minor vertical and horizontal grading throughout the project corridor. Bio-retention basins and drainage swales will be constructed throughout the corridor adjacent to the new shared use path.

A connector path to Railroad Street will be created off the westerly side of the LMRC north of Haverhill Street, extending through an existing paved commercial parking lot, near Station 56+50. The City will take a permanent easement on that commercial parcel. Adjacent to Bourgoin Square Park, a paved apron will be constructed off the easterly side of the LMRC to facilitate a connector path to be built by the City in the future. Several rows of precast concrete step seating will be set into the slope between the LMRC and the westerly side of Bourgoin Square Park leading down to the playing fields.

National Register-listed North Canal Historic District

The LMRC passes through the NRHP-listed North Canal Historic District for approximately 600'. This segment of the SUP leaves the railroad ROW and follows the easterly sidewalk along Broadway, extending from the north bank of the Merrimack River to the northerly side of Canal Street/Water Street. The SUP follows Broadway, crossing the 1848 stone-lined North Canal (LAW.906) on the Gilbert Memorial Bridge (MassDOT Bridge L-04-006), and then across the Canal Street/Water Street intersection to rejoin the rail corridor. The SUP follows existing sidewalks within the North Canal Historic District and will involve relatively minor upgrades for ADA compliance, as well as traffic signal upgrades and pedestrian safety improvements at the Canal Street/Water Street/Broadway intersection. The Gilbert Memorial Bridge (LAW.998), constructed in 1939, is comprised of a single-span concrete-encased steel stringer superstructure supported on reinforced concrete abutments. The Gilbert Memorial Bridge is mistakenly identified on MACRIS as the Edward O'Leary Bridge, which actually crosses the Merrimack River immediately to the south. Work on the Gilbert Memorial Bridge will be limited to new pavement markings.

Contributing buildings within the historic district adjacent to the LMRC include: the Upper Pacific Mill #5 Storehouse (LAW.266), 11 Broadway, an 1860 five-story brick warehouse; the North Canal Gatekeeper's House (LAW.263), 6 Broadway, an 1845 Greek Revival style dwelling; the Upper Pacific Cotton Mill Weave Shed and Office (LAW.264), 468 Canal Street, an 1887 brick mill building along North Canal east of Broadway; and Upper Pacific Cotton Yarn Mill #5 Storehouse (LAW.272), 3 Broadway, a 1902 brick six-story warehouse. The proposed work within the North Canal Historic District will not result in any physical impacts to contributing properties within or adjacent to the project area.

Improvement or Replacement of Various Bridges

The NRHP-eligible Manchester & Lawrence Railroad Bridge over the Merrimack River and the Boston & Maine South Canal Railroad Bridge, which is a contributing property in the NRHP-eligible South Canal Historic District, will be reused to carry the shared-use path, with repairs completed as necessary. For the Boston & Maine South Canal Railroad Bridge, the existing timber sleepers that support the tracks will be removed and replaced with new precast concrete deck panels and asphalt wearing surface. A timber pedestrian railing will be installed, and new lighting will be installed at either end of the bridge. For the Manchester & Lawrence Railroad Bridge over the Merrimack River, the existing timber sleepers also will be removed and replaced with new precast concrete deck panels on new steel floorbeams. The northerly half of the bridge will be paved with an asphalt wearing surface and the southerly half with precast concrete pavers. Steel cable pedestrian railings will be installed along both sides of the superstructure. Stacked timber seating and lighting will be installed along the centerline of the bridge.

MassDOT Bridge L-04-027, which carries Lowell Street over the corridor, is comprised of a five-span timber stringer superstructure supported by timber bent piers and dry-laid granite masonry abutments. The bridge was constructed in 1927 and substantially reconstructed in 1987. Bridge L-04-027 will be replaced by a single-span precast concrete rigid frame arch with a stone formliner treatment on the spandrel walls. The granite material in the existing abutments will be reused onsite. An 8'-wide, 300'-long timber pedestrian ramp will be constructed south of the bridge, leading up to Lowell Street. Bridge L-04-027 is a late and undistinguished example of a common structural type and does not appear to be eligible for individual listing in the NRHP. The bridge is not located within any NRHP-listed or eligible historic district.

The superstructure of MassDOT Bridge L-04-030, the **Boston & Maine Manchester Street Railroad Bridge** (**LAW.929**), which carried the railroad over Manchester Street, was removed by the MBTA in 2016, though the stone masonry abutments remain in place. A new prefabricated steel through

girder superstructure with asphalt wearing surface on corrugated steel deck panels will be installed on the existing stone masonry abutments to carry the LMRC over Manchester Street.

Archaeological Assessment

A review of the MHC's archaeological maps in MACRIS revealed one recorded archaeological sites within the project's direct APE: 19-ES-182 (Village Site 1), located in the vicinity of the Broadway/Essex Street intersection. While the project area passes directly through the recorded site boundaries, it is unlikely that project work will remain within the disturbed footprint within the railroad corridor and the roadway corridor along Essex Street. There are numerous pre-Contact archaeological sites recorded along the Merrimack River to the west of the APE. The nearest recorded pre-Contact sites include: 19-ES-191 (Village Site 2), located approximately 0.2 mile to the southwest of the bridge; 19-ES-192 (Boutwell's Falls Site), located approximately 0.55 mile to the west. It is the opinion of the MassDOT Archaeologist that low sensitivity for intact, significant archaeological resources can be ascribed to the project's direct area of potential effect based on the impacts of past railroad, roadway, canal, utility, and drainage work and dense urban commercial and industrial development. The shared use path will be constructed on the former railbed and will not impact any resources associated with the canals.

Section 4(f) Evaluation: Fee Taking and Permanent Utility Easements – De minimis impact

One fee taking and several permanent utility easements (PUEs) are required from parcels occupied by contributing properties within the National Register-listed North Canal Historic District. The fee taking is highlighted in green on the enclosed ROW plan, and PUEs are highlighted in red. Any taking or easement that results in the permanent incorporation of land from a public or private historic site into a transportation facility (e.g., drainage structures, retaining walls, utilities) is regarded as a transportation use and must be evaluated and approved under Section 4(f) of the Department of Transportation Act of 1966, as amended [23 CFR Part 774].

A fee taking, labeled Parcel 3-C (337 square feet) is required from the **Upper Pacific Cotton Yarn Mill #5 Storehouse (LAW.272)** parcel at 3 Broadway. The proposed taking encompasses an area of existing sidewalk abutting the storehouse and will bring this area within the roadway layout.

PUE-1 (543 sf) is required from the **Upper Pacific Cotton Mill Weave Shed and Office (LAW.264)** parcel at 468 Canal Street. This easement encompasses a narrow strip of land along the roadway frontage and will allow for minor relocation and future maintenance of overhead utility wires.

PUE-4 (23 sf) is required from the **North Canal (LAW.906)** parcel adjacent to the Upper Pacific Weave Shed. This easement encompasses a small triangle of land near the canal and will allow for minor relocation and future maintenance of overhead utility wires.

PUE-5 (1,183 sf) is required from the **Upper Pacific Storehouse #5 (LAW.266)** parcel at 11 Broadway. This easement encompasses a narrow strip of land along the roadway frontage and will allow for minor relocation of an existing utility pole, as well as future maintenance of overhead utility wires.

PUE-3 (28 sf) is required from the **North Canal Gatekeeper's House (LAW.263)** parcel at 6 Broadway. This easement encompasses a small triangle of land near the house and will allow for minor relocation of an existing utility pole, as well as future maintenance of overhead utility wires.

It is MassDOT's expectation that the Federal Highway Administration (FHWA) will determine that the proposed takings required from these National Register-listed and -eligible properties meet the criteria for a Section 4(f) *de minimis* finding, pursuant to 23 CFR 774.3(b). This project, therefore, does not require an individual Section 4(f) evaluation. This letter is intended to inform the State Historic Preservation Officer (SHPO) that this project is expected to qualify for a *de minimis* finding under Section 4(f) based on the concurrence of your office with this Section 106 finding of No Adverse Effect, pursuant to 23 CFR 774.5(b)(1)(ii).

Section 4(f) Evaluation: Temporary Occupancies – No 4(f) use

This project also requires temporary occupancies, also known as temporary construction easements, on several parcels within the NRHP-listed North Canal Historic District. These temporary occupancies will allow various construction activities, including tree removal, slope grading, and other related work. The proposed temporary occupancies are highlighted in yellow on the enclosed plans.

It is MassDOT's opinion that the temporary occupancies on parcels within the NRHP-listed historic district will satisfy the five conditions required for a temporary occupancy not to constitute a "use" within the meaning of Section 4(f), pursuant to 23 CFR 774.13(d):

(1) Duration must be temporary, i.e., less than the time needed for construction of the project, and there should be no change in ownership of the land;

(2) Scope of the work must be minor, i.e., both the nature and the magnitude of the changes to the Section 4(f) property are minimal

(3) There are no anticipated permanent adverse physical impacts, nor will there be interference with the protected activities, features, or attributes of the property, on either a temporary or permanent basis;

(4) The land being used must be fully restored, i.e., the property must be returned to a condition which is at least as good as that which existed prior to the project; and

(5) There must be documented agreement of the official(s) with jurisdiction over the Section 4(f) resource regarding the above conditions.

The SHPO is the official with jurisdiction over a historic site for the purposes of Section 4(f), pursuant to 23 CFR 774.17. Your concurrence with this No Adverse Effect finding will signify that your office agrees with MassDOT's assessment that the proposed temporary occupancies do not constitute a "use" of NR-listed or -eligible historic properties under Section 4(f) and that the conditions listed above have been satisfied, pursuant to Condition 5.

Early Coordination and Effect Determination

The City's design consultant, TRC, solicited comments from the Lawrence Historical Commission (LHC) in a letter dated February 18, 2021, with a copy forwarded to the MHC. MassDOT did not receive a response to that letter from the LHC.

In the opinion of MassDOT, the proposed shared-use path construction and related roadway improvements, bridge improvements or replacements, and other related work along the former Manchester & Lawrence Railroad corridor in Lawrence will have **No Adverse Effect** on the NRHP-

listed North Canal Historic District, the NRHP-listed Arlington Mill Historic District, the NRHP-eligible South Canal Historic District, or the NRHP-eligible Manchester & Lawrence Railroad Bridge over the Merrimack River (LAW.929). The proposed work will not disturb or displace any features associated with the North Canal, the South Canal, or Arlington Mills, and any features that define the landscape will be protected.

MassDOT solicits your concurrence with our No Adverse Effect finding for the project in accordance with Stipulation V.C.1 of the amended Section 106 Programmatic Agreement. A copy of this letter has been forwarded to the Federal Highway Administration as specified under the terms of the Programmatic Agreement. If you should have any questions about this project, please contact me at 207-590-4999.

Sincerely,

Kurt Jergensen
Historic Bridge Specialist
Environmental Services

cc: Cassandra Ostrander, FHWA

Encl: Project plans, incl. ROW plans
Locus map
Bridge photos

FOR FHWA USE

MassDOT Request for Federal Highway Administration (FHWA) Approval

MassDOT Highway Division requests final approval from FHWA that the proposed "use" of the above-described Section 4(f) resources meets the criteria of a *de minimis* impact, as specified under 23 CFR 774.17.

KENNETH S MILLER Digitally signed by KENNETH S MILLER
Date: 2024.01.08 08:43:46 -05'00'

Joi Singh, Division Administrator (or designee) Date
Federal Highway Administration
Massachusetts Division

RECEIVED
NOV 0 9 2023
MASS. HIST. COMM

Maura Healey, Governor
Kimberley Driscoll, Lieutenant Governor
Monica Tibbits-Nutt, Acting Secretary & CEO
Jonathan L. Gulliver, Highway Administrator

massDOT
Massachusetts Department of Transportation
Highway Division

RC.74041

November 7, 2023

CONCURRENCE Brona Simon
12/5/23
BRONA SIMON
STATE HISTORIC
PRESERVATION OFFICER
MASSACHUSETTS
HISTORICAL COMMISSION

Ms. Brona Simon
State Historic Preservation Officer
Massachusetts Historical Commission
220 Morrissey Boulevard
Boston, MA 02125

RE: Lawrence — Lawrence-Manchester Rail Corridor Rail Trail (MassDOT #608930)
Section 106 Review – No Adverse Effect
Section 4(f): Fee Taking and Permanent Easements – *de minimis* impact
Section 4(f): Temporary Occupancies – No 4(f) Use

Dear Ms. Simon:

The Massachusetts Department of Transportation (MassDOT) and the City of Lawrence propose to expend federal funds to construct a shared use path (SUP) and linear park along the former Manchester & Lawrence Railroad corridor. The SUP will extend for 1.5 miles from Merrimack Street north to the Methuen City Line, where the new shared use path will connect to the existing Methuen Rail Trail. The Lawrence Manchester Rail Corridor (LMRC) will cross the South Canal, the Merrimack River, and the North Canal on existing bridges. The corridor is currently owned by the Massachusetts Bay Transportation Authority (MBTA), except for a spur at the northerly end of the project corridor that is owned by the City.

The project's Area of Potential Effects (APE) includes several historic districts, buildings, and bridges that are either listed or eligible for listing in the National Register of Historic Places (NRHP), as described below. MassDOT has reviewed the project under the terms of the Massachusetts Statewide Programmatic Agreement for Section 106 of the National Historic Preservation Act of 1966, as amended [36 CFR Part 800.3(a)(2)], and has determined that the project will have **No Adverse Effect** on properties that are listed in or may be eligible for listing in the NRHP.

Area of Potential Effects

The project's APE includes two historic districts that are listed in the NHRP: a 600'-long segment of the LMRC passes through the **North Canal Historic District**, extending from the Merrimack River northerly to Canal Street/Water Street; a 1,500'-long segment of the LMRC abuts the **Arlington Mills Historic District**, extending from Manchester Street northerly to the Methuen City Line. Additionally, MassDOT has previously recommended **South Canal** (LAW.908), at the southerly limit of the project area, to be eligible for listing in the NRHP as a historic district. Staff at the Massachusetts Historical Commission (MHC) concurred with that recommendation. MassDOT Bridge L-04-045, the **Boston & Maine South Canal Railroad Bridge (LAW.927)**, a single-span steel deck plate girder superstructure supported on the canal walls constructed in 1907, would be a contributing property in the National Register-eligible South Canal Historic District.

The APE also includes MassDOT Bridge L-04-032, the **Manchester and Lawrence Railroad Bridge (LAW.923)** over the Merrimack River, built by the Boston & Maine Railroad in 1893. The bridge is comprised of a six-span, pin-connected Pratt deck truss superstructure supported on cut granite abutments and piers and is among the oldest of its type in Massachusetts. MHC staff determined the bridge to be eligible for listing in the NRHP in 1988 as part of the MBTA Survey. The bridge, which is currently out of service, will be retrofitted to accommodate the new shared use path.

Ten Park Plaza, Suite 4160, Boston, MA 02116
Tel: 857-368-4636, TTY: 857-368-0655
mass.gov/massdot

950 CMR: OFFICE OF THE SECRETARY OF THE COMMONWEALTH

APPENDIX A
MASSACHUSETTS HISTORICAL COMMISSION
220 MORRISSEY BOULEVARD
BOSTON, MASS. 02125
617-727-8470, FAX: 617-727-5128

PROJECT NOTIFICATION FORM

Project Name:	Lawrence Manchester Rail Corridor Rail Trail (MassDOT #608930)
Location /Address:	Former Manchester & Lawrence Railroad corridor
City/Town:	Lawrence
Project Proponent	
Name:	Massachusetts Department of Transportation
Address:	10 Park Plaza
City/Town/Zip/Telephone:	Boston, MA 02116 / T: 207-590-4999

Agency license or funding for the project (list all licenses, permits, approvals, grants or other entitlements being sought from state and federal agencies).

Agency Name	**Type of License or funding (specify)**
FHWA (lead agency)	Federal Aid funds
US Army Corps of Engineers	Section 404 permit

Project Description (narrative):

The Massachusetts Department of Transportation (MassDOT) and the City of Lawrence propose to expend federal funds to construct a shared use path (SUP) and linear park along the former Manchester & Lawrence Railroad corridor. The SUP will extend for 1.5 miles from Merrimack Street north to the Methuen City Line, where the new shared use path will connect to the existing Methuen Rail Trail. The Lawrence Manchester Rail Corridor (LMRC) will cross the South Canal, the Merrimack River, and the North Canal on existing bridges. The corridor is currently owned by the Massachusetts Bay Transportation Authority (MBTA), except for a spur at the northerly end of the project corridor that is owned by the City.

The proposed work will include construction of a 12'-wide paved shared use path and linear park along the former Manchester & Lawrence Railroad corridor. The path will typically remain within the existing MBTA or City right-of-way (ROW), with most of the proposed construction of the main SUP constrained to the existing railroad bed. A 10'-wide paved curvilinear path for pedestrian use and slower bicycle traffic will meander along the LMRC between Haverhill Street and Manchester Street within the existing MBTA ROW. North of Manchester Street, a 900’-long connector path will diverge from the main LMRC to follow the alignment of a spur track that formerly extended into the Arlington Mills millyard within the boundaries of the NRHP-listed Arlington Mills Historic District. The parcel on which the spur track is situated is now owned by the City, but no contributing buildings or structures are located on or immediately adjacent to the City parcel. The spur path will curve to the northeast to connect to the existing Spicket River Greenway. A 180’-long connector path will extend off this spur path through disturbed areas of the City-owned parcel to provide access to Manchester Street Park. The spur path will be flanked by precast concrete step seating, as well as several standard picnic tables and benches.

APPENDIX A (continued)

All remaining steel rails and timber ties will be removed from the rail beds throughout the LMRC. Overgrown vegetation along the corridor will be cleared and grubbed, with particular attention to eradication of invasive species. Any mature trees present will be retained. As there is a history of dumping in the area since the rail corridor was abandoned, any trash and other hazardous objects/ detritus present within the corridor will also be removed. Timber rail fences and timber guardrail will be installed within the corridor as necessary, to maintain appropriate safety standards.

The LMRC will generally be improved to provide a park-like feeling, with trees, shrubs and other landscaping, ornamental pedestrian-level lighting, concrete accent pavers, weathering steel accent wall features, reclaimed granite block slopes, stacked timber seating features and other seats, tables and amenities added at appropriate areas along the corridor. Improvements to drainage and subsurface conditions for paving will require minor vertical and horizontal grading throughout the project corridor. Bio-retention basins and drainage swales will be constructed throughout the corridor adjacent to the new shared use path.

A connector path to Railroad Street will be created off the westerly side of the LMRC north of Haverhill Street, extending through an existing paved commercial parking lot, near Station 56+50. The City will take a permanent easement on that commercial parcel. Adjacent to Bourgoin Square Park, a paved apron will be constructed off the easterly side of the LMRC to facilitate a connector path to be built by the City in the future. Several rows of precast concrete step seating will be set into the slope between the LMRC and the westerly side of Bourgoin Square Park leading down to the playing fields.

The Manchester & Lawrence Railroad Bridge over the Merrimack River and the Boston & Maine South Canal Railroad Bridge will be reused to carry the shared-use path, with repairs completed as necessary. For the Boston & Maine South Canal Railroad Bridge, the existing timber sleepers that support the tracks will be removed and replaced with new precast concrete deck panels and asphalt wearing surface. A timber pedestrian railing will be installed, and new lighting will be installed at either end of the bridge. For the Manchester & Lawrence Railroad Bridge over the Merrimack River, the existing timber sleepers also will be removed and replaced with new precast concrete deck panels on new steel floorbeams. The northerly half of the bridge will be paved with an asphalt wearing surface and the southerly half with precast concrete pavers. Steel cable pedestrian railings will be installed along both sides of the superstructure. Stacked timber seating and lighting will be installed along the centerline of the bridge.

MassDOT Bridge L-04-027, which carries Lowell Street over the corridor, is comprised of a five-span timber stringer superstructure supported by timber bent piers and dry-laid granite masonry abutments. The bridge was constructed in 1927 and substantially reconstructed in 1987. Bridge L-04-027 will be replaced by a single-span precast concrete rigid frame arch with a stone formliner treatment on the spandrel walls. The granite material in the existing abutments will be reused onsite. An 8’-wide, 300’-long timber pedestrian ramp will be constructed south of the bridge, leading up to Lowell Street. Bridge L-04-027 is a late and undistinguished example of a common structural type and does not appear to be eligible for individual listing in the NRHP. The bridge is not located within any NRHP-listed or eligible historic district.

The superstructure of MassDOT Bridge L-04-030, the Boston & Maine Manchester Street Railroad Bridge (LAW.929), which carried the railroad over Manchester Street, was removed by the MBTA in 2016, though the stone masonry abutments remain in place. A new prefabricated steel through girder superstructure with asphalt wearing surface on corrugated steel deck panels will be installed on the existing stone masonry abutments to carry the LMRC over Manchester Street.

APPENDIX A (continued)

Does the project include demolition? If so, specify nature of demolition and describe the building(s) which are proposed for demolition.

N/A

Does the project include rehabilitation of any existing buildings? If so, specify nature of rehabilitation and describe the building(s) which are proposed for rehabilitation

N/A

Does the project include new construction? If so, describe (attach plans and elevations if necessary).

A 12'-wide SUP will be constructed along existing railroad corridor, with replacement of Bridge L-04-027 on alignment with a precast concrete rigid frame arch structure, and the replacement of the now-removed Bridge L-04-030 with a steel through girder superstructure on existing stone masonry abutments.

To the best of your knowledge, are any historic or archaeological properties known to exist within the project's area of potential impact? If so, specify.

Review of the National Register of Historic Places revealed that the project's APE includes two historic districts that are listed in the NHRP: a 600'-long segment of the LMRC passes through the North Canal Historic District, extending from the Merrimack River northerly to Canal Street/Water Street; a 1,500'-long segment of the LMRC abuts the Arlington Mills Historic District, extending from Manchester Street northerly to the Methuen City Line.

The APE also includes MassDOT Bridge L-04-032, the Manchester and Lawrence Railroad Bridge (LAW.923) over the Merrimack River, built by the Boston & Maine Railroad in 1893. The bridge is comprised of a six-span, pin-connected Pratt deck truss superstructure supported on cut granite abutments and piers and is among the oldest of its type in Massachusetts. MHC staff determined the bridge to be eligible for listing in the NRHP in 1988 as part of the MBTA Historical Property Survey. Additionally, MassDOT has previously recommended South Canal (LAW.908), at the southerly limit of the project area, to be eligible for listing in the NRHP as a historic district. Staff at the Massachusetts Historical Commission (MHC) concurred with that recommendation. MassDOT Bridge L-04-045, the Boston & Maine South Canal Railroad Bridge (LAW.927), a single-span steel deck plate girder superstructure supported on the canal walls constructed in 1907, would be a contributing property in the National Register-eligible South Canal Historic District. Both of these bridges, which are currently out of service, will be retrofitted to carry the new shared use path.

Review of the Inventory of Historic and Archaeological Assets of the Commonwealth revealed that two mill buildings within the APE are included in the Inventory: the Levi Sprague Shuttle Co. building (LAW.570) at 275 Lowell Street and the Stanley Manufacturing Company building (LAW.571) at the corner of West Street and Haverhill Street. Both buildings have been documented for the Historic American Engineering Record and have potential to be eligible for the NRHP.

A review of the MHC's archaeological maps in MACRIS revealed one recorded archaeological sites within the project's direct APE: 19-ES-182 (Village Site 1), located in the vicinity of the Broadway/Essex Street intersection. While the project area passes directly through the recorded site boundaries, it is unlikely that project work will remain within the disturbed footprint within the railroad corridor and the roadway corridor along Essex Street. There are numerous pre-Contact archaeological sites recorded along the Merrimack River to the west of the APE. The nearest recorded pre-Contact sites include: 19-ES-191 (Village Site 2), located approximately 0.2 mile to the southwest of the bridge; 19-ES-192 (Boutwell's Falls Site), located approximately 0.55 mile to the west. It is the opinion of the MassDOT Archaeologist that low sensitivity for intact archaeological resources can be ascribed to the project's direct area of potential effect based on the impacts of past railroad, roadway, canal, utility, and drainage work and dense urban commercial and industrial development. The shared use path will be constructed on the former railbed and will not impact any resources associated with the canals.

APPENDIX A (continued)

What is the total acreage of the project area?

Woodland		acres	Productive Resources:		
Wetland		acres	Agriculture		acres
Floodplain	<1	acres	Forestry		acres
Open Space	<2	acres	Mining/Extraction		acres
Developed	<2	acres	Total Project Acreage	<5	acres

What is the acreage of the proposed new construction? <5 acres

What is the present land use of the project area?

The Project area is situated amid densely-developed urban neighborhoods in Lawrence. The proposed shared use path will follow the abandoned Boston & Maine RR/ Manchester & Lawrence RR corridor, presently owned by the Massachusetts Bay Transportation Authority.

Please attach a copy of the section of the USGS quadrangle map which clearly marks the project location.

This Project Notification Form has been submitted to the MHC in compliance with 950 CMR 71.00.

Signature of person submitting this form: 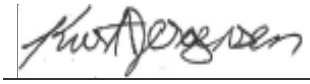 **Date:** 12/14/2023

Name: Kurt Jergensen

Address: 10 Park Plaza

City/Town/Zip: Boston, MA 02116

Telephone: 207-590-4999

REGULATORY AUTHORITY

950 CMR 71.00: M.G.L. c. 9, §§ 26-27C as amended by St. 1988, c. 254.

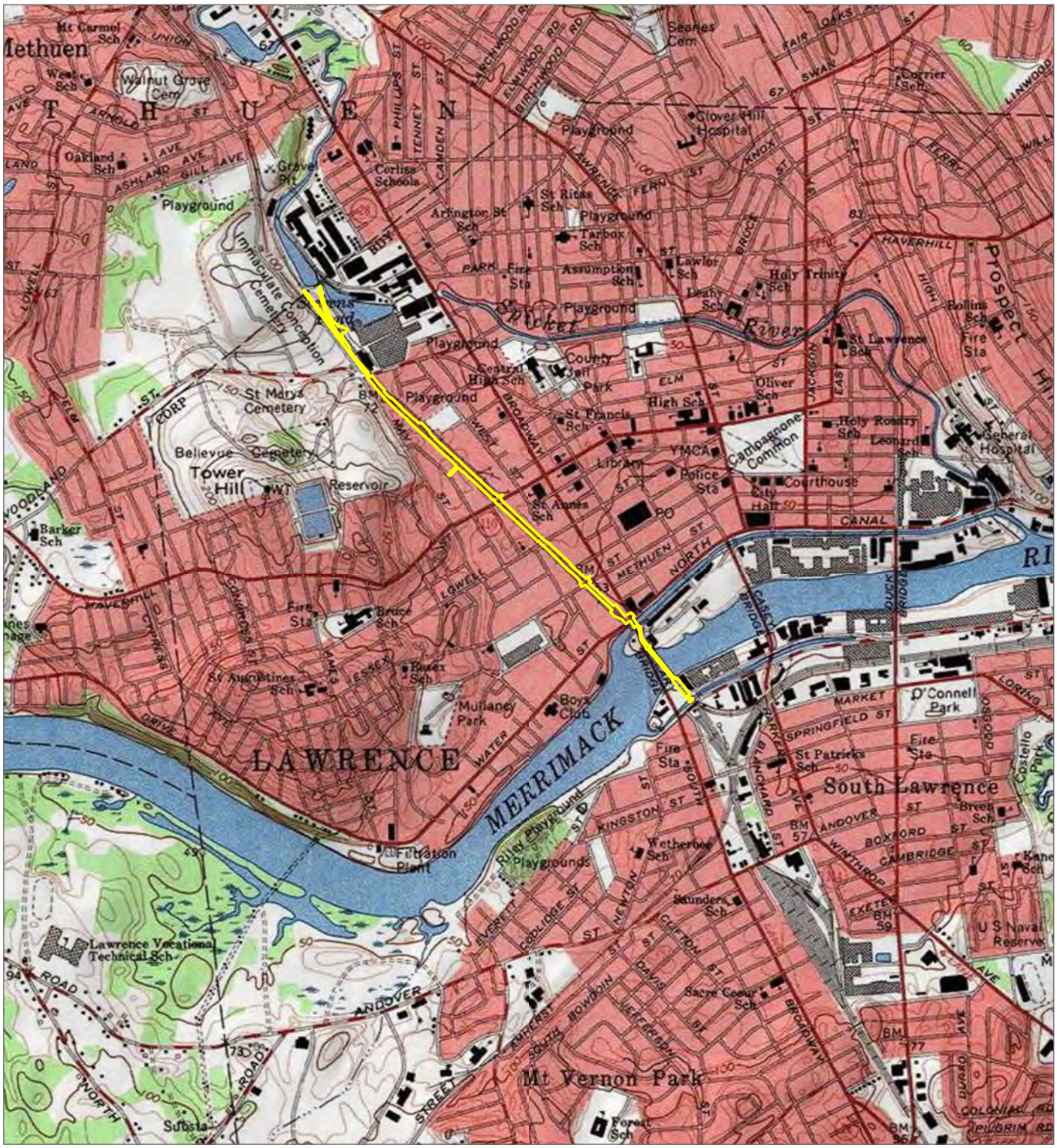

LIMIT OF DISTURBANCE

0 500 1,000
FEET
1:23,538 1" = 1,962'

BASE MAP: USGS COLOR ORTHO IMAGERY
DATA SOURCES: TRC

PROJECT:
LAWRENCE MANCHESTER RAIL CORRIDOR PROJECT
LAWRENCE, MA

TITLE:
PROJECT LOCATION

DRAWN BY:	A. YOUNG	PROJ. NO.:	000000
CHECKED BY:	K. MACK		
APPROVED BY:	K. MACK		**FIGURE 1**
DATE:	MARCH 2023		

TRC
P. O. BOX 1068
BATH, ME 04530

FILE: LRMC

COORDINATE SYSTEM: NAD 1983 STATEPLANE MASSACHUSETTS MAINLAND FIPS 2001 FEET: MAP ROTATION: 0
SAVED BY: AYOUNG ON 3/20/2023, 09:23:12 AM: FILE PATH: C:\USERS\AYOUNG\ONEDRIVE - TRC\DOCUMENTS\ARCGIS\PROJECTS\LRMC\LRMC.APRX: LAYOUT NAME: 8.5X11 P_INSET

Jergensen, Kurt E. (DOT)

From: Microsoft Outlook
To: Bettina Washington; tcrm2@wampanoagtribe-nsn.gov
Sent: Friday, December 15, 2023 4:26 PM
Subject: Relayed: Lawrence, Lawrence-Manchester Rail Corridor trail (MassDOT #608930; email 1 of 2)

Delivery to these recipients or groups is complete, but no delivery notification was sent by the destination server:

Bettina Washington (thpo@wampanoagtribe-nsn.gov)

tcrm2@wampanoagtribe-nsn.gov (tcrm2@wampanoagtribe-nsn.gov)

Subject: Lawrence, Lawrence-Manchester Rail Corridor trail (MassDOT #608930; email 1 of 2)

Lawrence, Lawrence-Manch...

Jergensen, Kurt E. (DOT)

From: Jergensen, Kurt E. (DOT)
Sent: Friday, December 15, 2023 4:26 PM
To: Bettina Washington
Cc: tcrm2@wampanoagtribe-nsn.gov; Harwood, Jameson (DOT)
Subject: Lawrence, Lawrence-Manchester Rail Corridor trail (MassDOT #608930; email 1 of 2)
Attachments: Lawrence-Manchester PNF.pdf; Locus map.pdf; 001_608930_75% Design Plans.pdf; 608930_75% Landscape Plans.pdf

Dear Ms. Washington,

MassDOT is submitting the enclosed information regarding the above-noted project to the Wampanoag Tribe of Gay Head (Aquinnah) to meet the Section 106 consultation requirements of the US Army Corps of Engineers. Due to file size, the submittal will be split between two emails. Please submit any written comments or concerns regarding historic or archaeological properties that may be affected by this project to Carrie Lavallee, P.E., Chief Engineer, Massachusetts Department of Transportation, 10 Park Plaza, Boston, MA 02116-3973, Attn: Jameson Harwood.

You also may send comments, questions, or requests for more information by email to Jameson.Harwood@state.ma.us.

Thank you very much.

Kurt Jergensen
Historic Bridge Specialist
Environmental Services
MassDOT, Highway Division
Ten Park Plaza, Boston, MA 02116
Cell: 207-590-4999

Jergensen, Kurt E. (DOT)

From: Microsoft Outlook
To: Bettina Washington; tcrm2@wampanoagtribe-nsn.gov
Sent: Friday, December 15, 2023 4:29 PM
Subject: Relayed: Lawrence, Lawrence-Manchester Rail Corridor trail (MassDOT #608930; email 2 of 2)

Delivery to these recipients or groups is complete, but no delivery notification was sent by the destination server:

Bettina Washington (thpo@wampanoagtribe-nsn.gov)

tcrm2@wampanoagtribe-nsn.gov (tcrm2@wampanoagtribe-nsn.gov)

Subject: Lawrence, Lawrence-Manchester Rail Corridor trail (MassDOT #608930; email 2 of 2)

Lawrence, Lawrence-Manch...

Jergensen, Kurt E. (DOT)

From: Jergensen, Kurt E. (DOT)
Sent: Friday, December 15, 2023 4:28 PM
To: Bettina Washington
Cc: tcrm2@wampanoagtribe-nsn.gov; Harwood, Jameson (DOT)
Subject: Lawrence, Lawrence-Manchester Rail Corridor trail (MassDOT #608930; email 2 of 2)
Attachments: 608930_75% Bridge Plans.pdf; 608930_75% Design Plans_Lowell Street Bridge.pdf

Dear Ms. Washington,

MassDOT is submitting the enclosed information regarding the above-noted project to the Wampanoag Tribe of Gay Head (Aquinnah) to meet the Section 106 consultation requirements of the US Army Corps of Engineers. Due to file size, the submittal will be split between two emails. Please submit any written comments or concerns regarding historic or archaeological properties that may be affected by this project to Carrie Lavallee, P.E., Chief Engineer, Massachusetts Department of Transportation, 10 Park Plaza, Boston, MA 02116-3973, Attn: Jameson Harwood.

You also may send comments, questions, or requests for more information by email to Jameson.Harwood@state.ma.us.

Thank you very much.

Kurt Jergensen
Historic Bridge Specialist
Environmental Services
MassDOT, Highway Division
Ten Park Plaza, Boston, MA 02116
Cell: 207-590-4999

Jergensen, Kurt E. (DOT)

From: Microsoft Outlook
To: David Weeden; 106Review@mwtribe-nsn.gov
Sent: Friday, December 15, 2023 4:30 PM
Subject: Relayed: Lawrence, Lawrence-Manchester Rail Corridor trail (MassDOT #608930; email 1 of 2)

Delivery to these recipients or groups is complete, but no delivery notification was sent by the destination server:

David Weeden (David.Weeden@mwtribe-nsn.gov)

106Review@mwtribe-nsn.gov (106Review@mwtribe-nsn.gov)

Subject: Lawrence, Lawrence-Manchester Rail Corridor trail (MassDOT #608930; email 1 of 2)

Lawrence, Lawrence-Manch...

Jergensen, Kurt E. (DOT)

From: Jergensen, Kurt E. (DOT)
Sent: Friday, December 15, 2023 4:29 PM
To: David Weeden
Cc: 106Review@mwtribe-nsn.gov; Harwood, Jameson (DOT)
Subject: Lawrence, Lawrence-Manchester Rail Corridor trail (MassDOT #608930; email 1 of 2)
Attachments: Lawrence-Manchester PNF.pdf; Locus map.pdf; 001_608930_75% Design Plans.pdf; 608930_75% Landscape Plans.pdf

Dear Mr. Weeden,

MassDOT is submitting the enclosed information regarding the above-noted project to the Mashpee Wampanoag Tribe to meet the Section 106 consultation requirements of the US Army Corps of Engineers. Due to file size, the submittal will be split between two emails. Please submit any written comments or concerns regarding historic or archaeological properties that may be affected by this project to Carrie Lavallee, P.E., Chief Engineer, Massachusetts Department of Transportation, 10 Park Plaza, Boston, MA 02116-3973, Attn: Jameson Harwood.

You also may send comments, questions, or requests for more information by email to Jameson.Harwood@state.ma.us.

Thank you very much.

Kurt Jergensen
Historic Bridge Specialist
Environmental Services
MassDOT, Highway Division
Ten Park Plaza, Boston, MA 02116
Cell: 207-590-4999

Jergensen, Kurt E. (DOT)

From: Microsoft Outlook
To: David Weeden; 106Review@mwtribe-nsn.gov
Sent: Friday, December 15, 2023 4:30 PM
Subject: Relayed: Lawrence, Lawrence-Manchester Rail Corridor trail (MassDOT #608930; email 2 of 2)

Delivery to these recipients or groups is complete, but no delivery notification was sent by the destination server:

David Weeden (David.Weeden@mwtribe-nsn.gov)

106Review@mwtribe-nsn.gov (106Review@mwtribe-nsn.gov)

Subject: Lawrence, Lawrence-Manchester Rail Corridor trail (MassDOT #608930; email 2 of 2)

Lawrence, Lawrence-Manch...

Jergensen, Kurt E. (DOT)

From: Jergensen, Kurt E. (DOT)
Sent: Friday, December 15, 2023 4:30 PM
To: David Weeden
Cc: 106Review@mwtribe-nsn.gov; Harwood, Jameson (DOT)
Subject: Lawrence, Lawrence-Manchester Rail Corridor trail (MassDOT #608930; email 2 of 2)
Attachments: 608930_75% Bridge Plans.pdf; 608930_75% Design Plans_Lowell Street Bridge.pdf

Dear Mr. Weeden,

MassDOT is submitting the enclosed information regarding the above-noted project to the Mashpee Wampanoag Tribe to meet the Section 106 consultation requirements of the US Army Corps of Engineers. Due to file size, the submittal will be split between two emails. Please submit any written comments or concerns regarding historic or archaeological properties that may be affected by this project to Carrie Lavallee, P.E., Chief Engineer, Massachusetts Department of Transportation, 10 Park Plaza, Boston, MA 02116-3973, Attn: Jameson Harwood.

You also may send comments, questions, or requests for more information by email to Jameson.Harwood@state.ma.us.

Thank you very much.

Kurt Jergensen
Historic Bridge Specialist
Environmental Services
MassDOT, Highway Division
Ten Park Plaza, Boston, MA 02116
Cell: 207-590-4999

Jergensen, Kurt E. (DOT)

From: Microsoft Outlook
To: Tashtesook@aol.com
Sent: Friday, December 15, 2023 4:32 PM
Subject: Relayed: Lawrence, Lawrence-Manchester Rail Corridor trail (MassDOT #608930; email 1 of 2)

Delivery to these recipients or groups is complete, but no delivery notification was sent by the destination server:

Tashtesook@aol.com (tashtesook@aol.com)

Subject: Lawrence, Lawrence-Manchester Rail Corridor trail (MassDOT #608930; email 1 of 2)

Lawrence, Lawrence-Manch...

Jergensen, Kurt E. (DOT)

From: Jergensen, Kurt E. (DOT)
Sent: Friday, December 15, 2023 4:31 PM
To: Tashtesook@aol.com
Cc: Harwood, Jameson (DOT)
Subject: Lawrence, Lawrence-Manchester Rail Corridor trail (MassDOT #608930; email 1 of 2)
Attachments: Lawrence-Manchester PNF.pdf; Locus map.pdf; 001_608930_75% Design Plans.pdf; 608930_75% Landscape Plans.pdf

Dear Mr. Brown,

MassDOT is submitting the enclosed information regarding the above-noted project to the Narragansett Indian Tribe to meet the Section 106 consultation requirements of the US Army Corps of Engineers. Due to file size, the submittal will be split between two emails. Please submit any written comments or concerns regarding historic or archaeological properties that may be affected by this project to Carrie Lavallee, P.E., Chief Engineer, Massachusetts Department of Transportation, 10 Park Plaza, Boston, MA 02116-3973, Attn: Jameson Harwood.

You also may send comments, questions, or requests for more information by email to Jameson.Harwood@state.ma.us.

Thank you very much.

Kurt Jergensen
Historic Bridge Specialist
Environmental Services
MassDOT, Highway Division
Ten Park Plaza, Boston, MA 02116
Cell: 207-590-4999

Jergensen, Kurt E. (DOT)

From: Microsoft Outlook
To: Tashtesook@aol.com
Sent: Friday, December 15, 2023 4:32 PM
Subject: Relayed: Lawrence, Lawrence-Manchester Rail Corridor trail (MassDOT #608930; email 2 of 2)

Delivery to these recipients or groups is complete, but no delivery notification was sent by the destination server:

Tashtesook@aol.com (tashtesook@aol.com)

Subject: Lawrence, Lawrence-Manchester Rail Corridor trail (MassDOT #608930; email 2 of 2)

Lawrence, Lawrence-Manch...

Jergensen, Kurt E. (DOT)

From: Jergensen, Kurt E. (DOT)
Sent: Friday, December 15, 2023 4:32 PM
To: Tashtesook@aol.com
Cc: Harwood, Jameson (DOT)
Subject: Lawrence, Lawrence-Manchester Rail Corridor trail (MassDOT #608930; email 2 of 2)
Attachments: 608930_75% Bridge Plans.pdf; 608930_75% Design Plans_Lowell Street Bridge.pdf

Dear Mr. Brown,

MassDOT is submitting the enclosed information regarding the above-noted project to Narragansett Indian Tribe to meet the Section 106 consultation requirements of the US Army Corps of Engineers. Due to file size, the submittal will be split between two emails. Please submit any written comments or concerns regarding historic or archaeological properties that may be affected by this project to Carrie Lavallee, P.E., Chief Engineer, Massachusetts Department of Transportation, 10 Park Plaza, Boston, MA 02116-3973, Attn: Jameson Harwood.

You also may send comments, questions, or requests for more information by email to Jameson.Harwood@state.ma.us.

Thank you very much.

Kurt Jergensen
Historic Bridge Specialist
Environmental Services
MassDOT, Highway Division
Ten Park Plaza, Boston, MA 02116
Cell: 207-590-4999

Jergensen, Kurt E. (DOT)

From: Microsoft Outlook
To: Robinson, David S (EEA)
Sent: Friday, December 15, 2023 4:34 PM
Subject: Delivered: Lawrence, Lawrence-Manchester Rail Corridor trail (MassDOT #608930; email 1 of 2)

Your message has been delivered to the following recipients:

Robinson, David S (EEA) (David.S.Robinson@mass.gov)

Subject: Lawrence, Lawrence-Manchester Rail Corridor trail (MassDOT #608930; email 1 of 2)

Lawrence, Lawrence-Manch...

Jergensen, Kurt E. (DOT)

From: Jergensen, Kurt E. (DOT)
Sent: Friday, December 15, 2023 4:33 PM
To: Robinson, David S (EEA)
Cc: Harwood, Jameson (DOT)
Subject: Lawrence, Lawrence-Manchester Rail Corridor trail (MassDOT #608930; email 1 of 2)
Attachments: Lawrence-Manchester PNF.pdf; Locus map.pdf; 001_608930_75% Design Plans.pdf; 608930_75% Landscape Plans.pdf

Dear Mr. Robinson,

MassDOT is submitting the enclosed information regarding the above-noted project to Board of Underwater Archaeological Resources to meet the Section 106 consultation requirements of the US Army Corps of Engineers. Due to file size, the submittal will be split between two emails. Please submit any written comments or concerns regarding historic or archaeological properties that may be affected by this project to Carrie Lavallee, P.E., Chief Engineer, Massachusetts Department of Transportation, 10 Park Plaza, Boston, MA 02116-3973, Attn: Jameson Harwood.

You also may send comments, questions, or requests for more information by email to Jameson.Harwood@state.ma.us.

Thank you very much.

Kurt Jergensen
Historic Bridge Specialist
Environmental Services
MassDOT, Highway Division
Ten Park Plaza, Boston, MA 02116
Cell: 207-590-4999

Jergensen, Kurt E. (DOT)

From: Microsoft Outlook
To: Robinson, David S (EEA)
Sent: Friday, December 15, 2023 4:35 PM
Subject: Delivered: Lawrence, Lawrence-Manchester Rail Corridor trail (MassDOT #608930; email 2 of 2)

Your message has been delivered to the following recipients:

Robinson, David S (EEA) (David.S.Robinson@mass.gov)

Subject: Lawrence, Lawrence-Manchester Rail Corridor trail (MassDOT #608930; email 2 of 2)

Lawrence, Lawrence-Manch...

Jergensen, Kurt E. (DOT)

From: Jergensen, Kurt E. (DOT)
Sent: Friday, December 15, 2023 4:34 PM
To: Robinson, David S (EEA)
Cc: Harwood, Jameson (DOT)
Subject: Lawrence, Lawrence-Manchester Rail Corridor trail (MassDOT #608930; email 2 of 2)
Attachments: 608930_75% Bridge Plans.pdf; 608930_75% Design Plans_Lowell Street Bridge.pdf

Dear Mr. Robinson,

MassDOT is submitting the enclosed information regarding the above-noted project to the Board of Underwater Archaeological Resources to meet the Section 106 consultation requirements of the US Army Corps of Engineers. Due to file size, the submittal will be split between two emails. Please submit any written comments or concerns regarding historic or archaeological properties that may be affected by this project to Carrie Lavallee, P.E., Chief Engineer, Massachusetts Department of Transportation, 10 Park Plaza, Boston, MA 02116-3973, Attn: Jameson Harwood.

You also may send comments, questions, or requests for more information by email to Jameson.Harwood@state.ma.us.

Thank you very much.

Kurt Jergensen
Historic Bridge Specialist
Environmental Services
MassDOT, Highway Division
Ten Park Plaza, Boston, MA 02116
Cell: 207-590-4999

650 Suffolk St., Suite 200
Lowell, MA 01854
T 978.970.5600
TRCcompanies.com

December 11, 2023

NOAA Fisheries
Greater Atlantic Regional Fisheries Office
Protected Resources Division
55 Great Republic Drive
Gloucester, MA 01930

Attn: Ms. Jennifer Anderson

Re: Lawrence Manchester Rail Corridor (LMRC) Project located within the former Lawrence Manchester Rail Corridor from Merrimack Street to the Lawrence/Methuen City Line

Dear Ms. Anderson,

We are carrying out the proposed project as described below. We have made the determination that the proposed activity will have "no effect" on any species listed as threatened or endangered and critical habitat by the National Oceanographic and Atmospheric Administration (NOAA) Fisheries under the Endangered Species Act (ESA) of 1973, as amended.

The proposed **Lawrence Manchester Rail Corridor (LMRC) Project** consists of redeveloping 1.40-miles of the inactive Lawrence Manchester Rail Corridor into a shared-use path/alternate transportation corridor (ATC) for pedestrian and bicycle accommodations. The Project area begins at Merrimack Street in Lawrence and extends north to the Lawrence/Methuen City Line (**Attachment A; Figure 1**). The purpose of **LMRC Project** is to provide an alternate transportation route, connecting to the City of Methuen Rail Trail and the regional trail network.

The **LMRC Project** ATC will begin at Merrimack Street in Lawrence, connect to Manchester Street Park and the Spicket River Greenway to the north and terminates at the City of Methuen Rail Trail. The **LMRC Project** includes improving three at-grade intersection crossings and developing additional access points to the City of Methuen Rail Trail from existing developments and parks. The Project is anticipated to start in August 2024 and will take approximately three years to reach substantial completion.

Along the existing Lawrence Manchester Rail Corridor, there are four bridges that will be improved as part of the **LMRC Project** including:

- deck replacements at bridges over the South Canal and the Merrimack River;
- complete replacement of the Lowell Street Bridge; and
- superstructure replacement at the Manchester Street Bridge Crossing.

This letter of "no effect" determination pertains to the proposed work on the bridges that span over the South Canal and the Merrimack River. The **LMRC Project** Action Area includes waterway portions which lie beneath the bridges spanning over the South Canal and the Merrimack River and downstream of the Essex Dam (**Attachment A; Figure 2)**.

Project Description

The South Canal is situated parallel along the Merrimack River, juxtaposed between Merrimack Street and landform bordering the mainstem of the Merrimack River (**Attachment A; Figure 2**).

The South Canal terminates at the highly developed industrial complex west of Union Street. Merrimack River runs 126.8 miles in total, flowing from both the Pemigewasset and Winnipesaukee Rivers to the Atlantic Ocean, with approximately 49 miles of the river within Massachusetts. The Merrimack River is classified in the fifth stream order with an average pH of 6.6 (Brady et al., 2005). The first obstruction to the Merrimack River is the Essex Dam located in Lawrence, Massachusetts at river mile 28.8. The Essex Dam ranges from 73 to 531 feet away from the Project Area. Built in 1848, the Essex Dam has a spillway width of 920 feet and a spillway height of 31 feet. The Essex Dam has been equipped with fish passage facilities since the mid-19th century with the latest upgrade involved the installation of a fish lift in the 1980s. This fish lift has the capacity to pass 840,000 shad annually and is in good passable condition (Brady et al., 2005).

The existing Lawrence Manchester Rail Corridor has been divided into several sub catchment areas consisting of semipervious railway and vegetated landscaped areas along the shoulders of the railway. The corridor varies in width from 50 to 80 feet and is approximately 1.4 miles long. Utility poles and underground fiber-optic cables run the entire length of the corridor.

The proposed construction includes a 12-foot-wide full depth pavement bike path between the South Canal and Merrimack River bridges and from Water Street to the limits of the City of Methuen. Along most of the central corridor a five-foot-wide full depth pavement walking path is proposed alongside and intersecting with the bike path. Concrete gathering areas, benches, and stadium seating is proposed throughout the trail. The Project will impact four existing bridges along the length of the corridor. One new bridge, a proposed elevated wood ramp, will be added 400 feet northwest of Essex Street and leading up to Lowell Street. The 75 percent design plans describe in detail all proposed construction activities which can be found in **Attachment B.**

The proposed **LMRC Project** has been broken into eight sections, two sections travel over water and the remaining six travel overland, as shown in the following table:

Table 1: LMRC Project Sections

Trail Section	Section Start and End Points	Section Length (Feet)	Over Water or Land
1	Merrimack Street to Merrimack River (includes South Canal)	370	Water/Land
2	Merrimack River to Broadway/Water Street Intersection (includes Merrimack River)	690	Water/Land
3	Water Street to Essex Street Intersection	715	Land
4	Essex Street to Lowell Street	750	Land
5	Lowell Street to Haverhill Street Intersection	775	Land
6	Haverhill Street to Bourgoin Square Park (West Street Park)	1,230	Land
7	Bourgoin Square Park to Manchester Street Intersection	1,150	Land
8	Manchester Street to Methuen City Line	1,400	Land

The following paragraphs provide details of **LMRC Project Sections 1 and 2**, which pertain to the work on the bridges that span over the waterways of the South Canal and the Merrimack River.

The **LMRC Project Section 1** from Merrimack Street to the Merrimack River includes the Merrimack Street sidewalk, a bridge over the South Canal, and a 300-foot stretch of railway towards the Merrimack River. Crossing the South Canal is a 70-foot open deck rail bridge with timber ties. There is a single set of railroad tracks through this section. The shoulders of the railway have a small amount of ground cover, the only vegetation being large trees and bushes.

Proposed changes to the first section, from Merrimack Street to the Merrimack River, include sidewalk repairs, the addition of an Americans with Disabilities Act (ADA) accessible wheelchair ramp, a deck replacement to the South Canal bridge, and the construction of a bike path, concrete seating areas, and landscaped areas. The South Canal bridge deck replacement is proposed to be a cast in place concrete deck bridge. All railroad tracks are proposed to be removed.

The **LMRC Project Section 2** of the corridor consists of the crossing the Merrimack River, the path from the bridge to the sidewalk on Broadway, and the Broadway/Water Street intersection. Crossing the Merrimack River is a 550-foot open deck rail bridge with timber ties. The single set of railroad tracks continues across the bridge. The undeveloped path leading to the Broadway Street sidewalk is 140 feet long. This section is overgrown with vegetation near the bridge and nearly bare or mulched near the sidewalk. The path, sidewalk, and intersection do not follow the original route of the tracks. There are no railroad tracks in this section of the corridor.

Proposed changes to the second section, from Merrimack River to Broadway/Water Street Intersection, will consist of a deck replacement to the Merrimack River bridge, continued construction of the bike path, concrete seating areas, and landscaped areas. The Merrimack River bridge deck replacement is proposed to include isolated steel repairs. All railroad tracks are proposed to be removed.

Construction Description and Mitigation Measures

The Project will be constructed in a single phase under the control and oversight of Massachusetts Department of Transportation (MassDOT) who will provide on-site construction administrative and inspection services during the entire construction duration. The City of Lawrence may retain an environmental monitor to oversee construction activities. Long-term operation and maintenance of the multi-modal recreational trail will be the responsibility of the City of Lawrence.

As described, in the **LMRC Project Section 1** at the South Canal a concrete deck bridge replacement will be a cast in place in the **LMRC Project Section 2**, the Merrimack River bridge deck replacement will include isolated steel repairs. During construction, a protective shielding system will be implemented on and underneath the South Canal bridge and the Merrimack River bridge to protect the waterway below from any potential falling or flying debris during any deck replacement or steel repair work.

Once selected, the assigned contractor will be responsible for designing, furnishing, installing, maintaining, removing, and finally disposing of the protective shielding system. The shielding

system will be installed in-place prior to any bridge work and will be inspected and approved by the City of Lawrence, MassDOT, and the on-site Project engineer prior to commencement of construction.

The overwater bridge work will not involve dredging, pile driving, hydro acoustic impacts, habitat conversion or vessel traffic. There will be no riprap or other material placed on the shoreline or river bottom. Additionally, no turbidity curtains, cofferdams, or time of year restrictions will be employed. Throughout this process, no in-water work is required for the completion of this Project.

Erosion and Sediment Controls

Impacts will be limited to the Project limit of disturbance which is restricted as much as possible to the existing Lawrence Manchester Rail Corridor. Additionally, sediment and erosion controls will be used to prevent off-site impacts during construction and a stormwater management system will be installed to control runoff and prevent off-site impacts after construction. No sediment or erosion will be introduced into the South Canal or the Merrimack River.

Regulatory Background and Correspondence

The Project will not result in any discharges, and therefore will not require any permitting through the National Pollutant Discharge Elimination System (NPDES).

Resultant Project impacts to state jurisdictional resource areas have been reviewed and approved pursuant to the State of Massachusetts Wetlands Protection Act (WPA), by the state regulatory agencies.

The Natural Heritage and Endangered Species Program (NHESP) of the Massachusetts Division of Fisheries & Wildlife (the Division) has identified that this Project area, or portion thereof, is located within Priority Habitat 2154 (PH 2154) and Estimated Habitat 1362 (EH 1362) as indicated in the Massachusetts Natural Heritage Atlas (15th Edition) for the following state-listed rare species that are protected under Massachusetts Endangered Species Act (MESA) (M.G.L. c. 131A) and its implementing regulations (321 CMR 10.00): the shortnose sturgeon (*Acipenser brevirostrum*) and the Atlantic sturgeon (*Acipenser oxyrinchus*) (NHESP Tracking #23-41576). Under the Massachusetts Wetlands Protection Act, MassWildlife determined that the Project will not adversely affect the actual resource area habitats of the state-protected rare wildlife species. Under MESA, MassWildlife determined that the Project will not result in a prohibited "take" of state-listed rare species. **Attachment C** provides the MESA Program response letter pertinent to this Project dated January 5, 2023, and the determination letter dated September 27, 2023.

NOAA Fisheries Listed Species and Critical Habiat in the Action Area

As defined, the Action Area means all areas to be affected directly or indirectly by the federal action and not merely the immediate area involved in the action (50 CFR 402.02). The **LMRC Project** Action Area includes the portions of the South Canal and Merrimack River that lie beneath the South Canal and the Merrimack River bridges.

Based on NOAA's ESA Section 7 Mapper[1], within the Action Area, there are two endangered fish species mapped in the Merrimack River including the shortnose sturgeon (*Acipenser brevirostrum*), the Atlantic sturgeon (*Acipenser oxyrinchus*) and the critical habitat for the Atlantic sturgeon. **Attachment A; Figure 3** identifies the extent of both species and the critical habitat in the Project area.

Shortnose Sturgeon *(Acipenser brevirostrum)*

The general distribution of this amphidromous species is typically in Atlantic Ocean waters and associated bays, estuaries, and coastal river systems from Nova Scotia to Florida. Adults live in marine waters, with some making coastal migrations between river systems. Examples of this include the Penobscot River to the Merrimack River via the Gulf of Maine, the Merrimack River to the Connecticut River via the Gulf of Maine and Long Island Sounds, and the Connecticut River to Hudson River via the Long Island Sound and the East River (NOAA 2023a). Shortnose sturgeon hatch in the freshwater of rivers and spend most of their life in the estuaries of these rivers. The typical distribution of this species is found in rivers and inshore bays from the estuary or river mouth up to the first impassible barrier (i.e., dams or falls) (NOAA 2023a) (Kieffer and Kynard 1996). Within the Merrimack River, the distribution of the shortnose sturgeon spans up to the Essex Dam (NOAA 2022a). The Essex Dam ranges from 73 to 531 feet away from the Project area (**Attachment A; Figure 2**) and is equipped with a fish lift that has the capacity to pass 840,000 shad annually. This fish lift is in good passable condition, and therefore would not be identified as an impassible barrier for the shortnose sturgeon (Brady et al., 2005).

In the rare occasion that the shortnose sturgeon enters marine waters, they generally stay close to shore. This species spawns in the spring, moving far upstream and away from the saltwater. After spawning, these adults move downstream back to the estuaries. Generally, this species can reach up to 4.5 feet in length and live 30 years or more (NOAA 2023a).

There are several life stages present within the Merrimack River: eggs, larvae young-of-year (YOY), juveniles, and adults (NOAA 2022a). The Merrimack River has the smallest population known, in which adult abundance is estimated at only tens of adults (Kieffer and Kynard 1996; Kynard et al. 1997). Shortnose sturgeon in the Merrimack River were never scientifically documented until the studies of Kieffer and Kynard (1993, 1996), as cited in NOAA 2022a, which documented use of river reaches, habitat use, spawning and foraging reaches, and annual migrations. These studies in the 1990s established that all life stages of the species were present, and further, that adults spawned at Haverhill, located upstream of the Project area. Recent studies found Haverhill remains the only spawning site for the species in the river.

Habitats of adults and large juveniles (spawning, foraging, and wintering) in the Merrimack River is well-studied (Kieffer and Kynard 1993, 1996 and Kynard et al. 2000 as cited in NOAA 2022); Habitats used are similar to habitats used by the intensively studied Connecticut River shortnose Sturgeon (Kieffer and Kynard 2012a; Kieffer et al. 2012; Kynard et al. 2012a, b).

Adult (foraging – wintering) – Adults forage over sand, sand-gravel, and sand-mud substrate in the Amesbury reach of the Merrimack River (Kieffer and Kynard 1993 as cited in NOAA 2022a) like they do in the Potomac River (Kynard and Kieffer 2009). Adults spend the winter in deep sandy areas of the Amesbury reach (Kieffer and Kynard 1993 as cited in NOAA 2022a), like adults in the Connecticut River (Kynard and Kieffer 2012c).

[1] ESA Section 7 Mapper (arcgis.com)

Recent tracking of adults found reaches used for foraging and wintering (at Amesbury) has not changed (NOAA 2022a; Kynard and Kieffer 2009). This is important because “river reach” is critically important to shortnose sturgeon spawning, with adults bypassing suitable habitat in one river reach and homing to spawn in another river reach.

Adult (spawning) – Monitoring spawning for 17 years by Connecticut River adults found all spawning occurred in a photoperiod window between 27 April and 22 May. Within this photoperiod window, fish spawned early in warm temperatures and later in colder temperatures.

Within a few days after spawning, post-spawned adults depart Haverhill (Kieffer and Kynard 1996; NOAA 2022a). The same behavior was observed for post-spawned Connecticut River adults (Kieffer and Kynard 2012a). Many post-spawned Merrimack River adults swim to the freshwater: saltwater zone to forage typically for several weeks, and then, return to the Amesbury reach to forage (NOAA 2022a).

Juvenile – Juveniles habitat for growth to maturity is the mixed sandy bottom Amesbury reach downstream of Haverhill (NOAA 2022a). They are known to have increasing salinity tolerance with age and typically have the same habitat patterns as adults (NOAA 2019a).

Larva – Larvae are briefly present in the Merrimack River as they develop from free embryos into larvae, the first foraging life stage (Kynard and Horgan 2002). Larvae forage on zooplankton and drifting macro-invertebrates (Bath et al. 1981) most likely produced in the reservoirs upstream of Haverhill. Since drifting forage is mainly coming from upstream of the Project area and there will be no in-water work for this Project, there will be no substrate changes from any Project activities. Therefore, the Project will have no effect on the quick period larvae forage before departing from the spawning site.

Egg - Eggs are present at spawning sites in the Project area for their entire lives (Kynard and Horgan 2002; Kynard et al. 2010). There will be no disturbance of spawning substrate because the Project does not require any in-water work and therefore will not impact this life stage.

Atlantic Sturgeon *(Acipenser oxyrinchus)*

The general distribution of the Atlantic sturgeon is in Atlantic Ocean waters and associated bays, estuaries, and coastal water systems from Canada to Florida (NOAA 2022b). This species hatches in the freshwater of rivers, and then enter marine waters for subadult and adult life stages before they head back to where they hatched to spawn and lay eggs. Similar to shortnose sturgeon, the typical distribution of this species is found in rivers and inshore bays from the estuary or river mouth up to the first impassible barrier (i.e., dams or falls) (NOAA 2022b) (Kieffer and Kynard 1996 as cited in NOAA 2022b). Within the Merrimack River, the distribution of the Atlantic sturgeon spans to the Essex Dam and is often found around the lower islands reach and the mouth of the river (NOAA 2022b). The Essex Dam ranges from 73 to 531 feet away from the Project area (Attachment B; Figure 2) and is equipped with a fish lift that has the capacity to pass 840,000 shad annually. This fish lift is in good passable condition, and therefore would not be identified as an impassible barrier for the Atlantic sturgeon (Brady et al., 2005).

Atlantic sturgeon can reach up to 14 feet in length and up to 60 years in age (NOAA 2023b). This species utilizes the deepest of habitats in rivers, but are also found in shallow, tidally influenced flats and substrates including mud, sand, rubble, and cobble (NOAA 2022b).

The life stages present within the Merrimack River include: subadults and adults with the possibility of eggs, larvae, YOY and juveniles. Spawning potentially occurs within the Merrimack River due to the presence of features necessary to support recruitment and reproduction (NOAA 2022b). An estimated tens to hundreds of coastal-migrant juveniles natal to other rivers annually enter the lower reach of the Merrimack River and forage in the freshwater: saline interface in the mainstem river at Amesbury - Salisbury, MA (Kieffer and Kynard 1993 as cited in NOAA 2022b). This river reach is the upper reach of the estuary (Jerome et al. 1965). During several years, a rare juvenile was tracked migrating upstream as far as Haverhill. This tracked juvenile remained only a few days in freshwater before returning downstream to the saltwater-freshwater interface reach (Kieffer and Kynard 1993 as cited in NOAA 2022b).

Adult – Foraging typically occurs at the mouth of the river and the lower islands area (RKM 0-12) (NOAA 2022b). Historically, adult Atlantic sturgeon did not spawn in the river downstream of Lawrence, but they migrated far upstream to spawn (Kieffer and Kynard 1996 as cited in NOAA 2022b). There is a possibility for spawning to occur in the Merrimack River due to the presence of features necessary to support reproduction and recruitment (NOAA 2022b). While it is possible, it is unlikely that spawning would occur within the Project area.

Subadults – Migrating and foraging subadults may enter the lower estuary and utilize areas from the river mouth to the upstream limit of tidal effect. Foraging would occur at the mouth of the river, particularly in areas with softer substrate, using river kilometer (RKM) 7-12 (NOAA 2022b).

Juveniles – After the first year, juveniles become increasingly tolerant to saline water and utilize the full extent of the river to forage in areas with soft substrate (NOAA 2019b). Data suggests that the Merrimack River is used as a nursery area for juveniles (NMFS NOAA 2007).

YOY - YOY individuals are not tolerant to salinity and remain above the salt front. Rearing, migrating, and foraging for YOY requires continuous flow in main river channels absent of physical barriers (NOAA 2019b). Areas close to dams, reservoirs, or locks will not allow passage between the salt front and spawning sites to support YOY movement. The Essex Dam, however, is equipped with a fish lift that has the capacity to pass 840,000 shad annually (Brady et al., 2005). This fish lift is in good passable condition and should allow passage for YOY individuals. While the Essex Dam provides passage for these individuals to spawn, there will be no in-water work required for this Project and therefore will have no effect on this life stage.

Larvae – Within a few days after development into larvae, this life stage disperses downstream from the spawning site (Kynard and Horgan 2002). They will migrate downstream but stop dispersal upstream of salinity because they have low tolerance to salt. In the Merrimack River, this rearing zone would likely be in the Amesbury reach. Habitat use by larvae of dispersing shortnose, and larvae of other sturgeons is in the lower meter or so of the water column during downstream movement. Larvae stop and use the bottom to briefly forage (Kynard and Horgan 2002; Kynard et al. 2013). Observations on foraging larvae in artificial streams found migrants foraged on sand to boulders during migration, suggesting many substrate sizes are acceptable to wild foraging migrant larvae.

Free Embryo & Egg – These life stage would rear at the spawning site, which would likely be upstream from the Project area and will not be present.

Critical Habitat for Atlantic Sturgeon *(Acipenser oxyrinchus)*

The Merrimack River (Unit 5) has been identified as a critical habitat for the Atlantic sturgeon by the National Oceanic and Atmospheric Administration (NOAA) Fisheries (**Attachment A; Figure 4**) (NOAA 2022c) (82 FR 39160). Opposingly, the Merrimack River is not a critical habitat for the shortnose sturgeon. According to NOAA, critical habitat is defined as "specific areas within the geographical area occupied by the species at the time of listing that contain physical or biological features essential to conservation of the species and that may require special management considerations or protection; and specific areas outside the geographical area occupied by the species if the agency determines that the area itself is essential for conservation" (NOAA 2022c).

The Merrimack River was identified as a critical habitat for the Atlantic sturgeon in order to protect and provide special management considerations for certain physical features (82 FR 39160). These physical features include hard bottom substrate in low salinity waters, Aquatic habitat with a gradual downstream salinity gradient of 0.5 up to as high as 30 parts per thousand (ppt), appropriate water depth and absent physical barriers. These areas are necessary to support the Atlantic sturgeons' settlement, physiological development, and passage between the river mouth and spawning sites.

While the Project area is located within this critical habitat, there will be no in-water work required for this Project, therefore, Project activities will not impact or disturb this species or its critical habitat.

Effects Determination and Conclusions

In order to determine that the Project will have no-effect on the listed species, shortnose sturgeon and Atlantic sturgeon, and the critical habitat within the Project area, a series of stressors relevant to the Project activities must be addressed (NOAA 2023c).

The shortnose sturgeon and the Atlantic sturgeon will not be impacted by Project activities because there will be no in-water work. Therefore, there will be no effects to these species involving sound pollution, habitat structure and disturbance, dredging, water quality, prey quantity and quality, vessels, and in-water structures.

The critical habitat for the Atlantic sturgeon will not be impacted by Project activities because there will be no in-water work. Therefore, there will be no effects to this critical habitat involving sound pollution, habitat structure and disturbance, dredging, water quality, in-water structures including aquaculture, prey quantity and quality, and the alteration native fish composition.

Based on the absence of in water work, proposed mitigation measures, lack of stressors on either listed species and the absence of impacts on critical habitat present within the Project Action Area, it is appropriate to make a "no effect" determination for this Project.

References

Bath, D. W., O'Connor, J. M., J. B. Alber, and L. G. Arvidson. 1981. Development and identification of larval Atlantic sturgeon (*Acipenser oxyrhynchus*) and shortnose sturgeon (*A. brevirostrum*) from the Hudson River estuary, New York. Copeia 1981, 711−717.

Brady, P.D., Reback, K.E., McLaughlin, K.D., & Milliken, C.G. 2005. A Survey of Anadromous Fish Passage in Coastal Massachusetts Part 4. Boston Harbor, North Shore and Merrimack River. Technical Report TR-18. Massachusetts Division of Marine Fisheries (DMF): Southshore Field Station. Pocasset, MA. https://www.mass.gov/doc/introduction-10/download. Accessed February 2023.

Carlson, D.M., and K.W. Simpson. 1987. Gut contents of juvenile shortnose sturgeon in the upper Hudson estuary. Copeia 1987:796-802

Dadswell, M. J.; Taubert, B. D.; Squiers, T. S.; Marchett, D.; Buckley, J. 1984: Synopsis of biological data on shortnose sturgeon, *Acipenser brevirostrum* LeSueur 1818. FAO Fish. Synop. 140, 1−45.

Kieffer, M. C. and B. Kynard. 1993. Annual movements of shortnose and Atlantic sturgeon in the lower Merrimack River, Massachusetts. Trans. Amer. Fish. Soc. 22: 378–386.

Kieffer, M. C., and B. Kynard. 1996. Spawning of the Shortnose Sturgeon in the Merrimack River, Massachusetts. Trans. Amer. Fish. Soc. 125:179–186. Accessed February 2023

Kieffer, M. C. and B. Kynard. 2012a. Spawning and non-spawning migrations, spawning, and the effect of river regulation on spawning success of Connecticut River Shortnose Sturgeon.World Sturgeon Cons. Soc. Spec. Publ. 4, pp. 73-113.

Kieffer, M. C., Kynard, B., and D. Seibel. 2012. Foraging and wintering ranges and the effect of tidal and diel cycles on movement of Shortnose Sturgeon with a note on sub-adult Atlantic Sturgeon. World Sturgeon Cons. Soc. Spec. Publ. 4, pp. 115-127.

Kynard, B. 1997. Life history, latitudinal gradients, and conservation of Shortnose Sturgeon *Acipenser brevirostrum*. Environ. Biol. Fish. 48: 319–334.

Kynard, B., M. Horgan, M. Kieffer, and D. Seibel. 2000. Habitats used by shortnose sturgeon in two Massachusetts Rivers, with notes on estuarine Atlantic sturgeon: a hierarchical analysis. Trans. Amer. Fish, Soc. 129: 487-503

Kynard, B. and M. Horgan. 2003. Attraction of pre-spawning male shortnose sturgeon, *Acipenser brevirostrum*, to the odor of pre-spawning females. J Ichthyol. 42: 205-2

Kynard, B. and M. Kieffer. 2009. Shortnose sturgeon in the Merrimack River: status after 20 years. Prog. Rept. to NMFS Reg. Off., Gloucester, MA. pp. 14.

Kynard, B. D. Pugh, T. Parker, and M. Kieffer. 2010. Using a semi-natural stream to produce young sturgeons for conservation stocking: maintaining natural selection during spawning and rearing. J. Appl. Ichthyol. 27: 420-424.

Kynard, B. M. Kieffer, M. Burlingame, P. Vinogradov, and B. E. Kynard. 2012a: Adult movements, demography, and spawning success of Connecticut River Shortnose Sturgeon at Holyoke Dam. World Sturgeon Cons. Soc. Spec. Publ. 4, pp. 51-72.

Kynard, B., M. Kieffer, M. Horgan, M. Burlingame, P. Vinogradov, and B. E. Kynard. 2012b. Up- and downstream migrations and population structure of Connecticut River Shortnose Sturgeon: effects of Holyoke Dam. World Sturgeon Cons. Soc. Spec. Publ. No. 4, pp. 1-49.

Kynard, B., D. Pugh, T. Parker, M. Kieffer. 2012c. Spawning of Connecticut River Shortnose Sturgeon in an artificial stream: Adult behaviour and early life history. World Sturgeon Cons. Soc. Spec. Publ. 4, pp. 165-195.

NMFS NOAA. 2007. Status Review of the Atlantic Sturgeon (*Acipenser oxyrinchus oxyrinchus)* Prepared by the Atlantic Sturgeon Status Review Team. National Marine Fisheries Service National Oceanic and Atmospheric Administration. https://www.nrc.gov/docs/ML0901/ML090120040.pdf. Accessed February 2023.

NMFS NOAA. 2010. Biological Assessment of Shortnose Sturgeon *Acipenser brevirostrum* Prepared by the Shortnose Sturgeon Status Review Team. National Marine Fisheries Service National Oceanic and Atmospheric Administration. https://repository.library.noaa.gov/view/noaa/17811. Accessed February 2023.

NOAA. 2019a. Shortnose Sturgeon – General Life Stage/Behavior Descriptions. https://media.fisheries.noaa.gov/dammigration/sns_life_stage_behavior_descriptions_20191029_508.pdf. Accessed February 2023.

NOAA. 2019b. Atlantic Sturgeon – General Life Stage/Behavior Descriptions. https://media.fisheries.noaa.gov/dammigration/ans_life_stage_behavior_descriptions_20191029_508.pdf Accessed February 2023.

NOAA. 2022a. Section 7 Species Presence Table: Shortnose Sturgeon in the Greater Atlantic Region. Greater Atlantic Regional Fisheries Office. https://www.fisheries.noaa.gov/new-england-mid-atlantic/consultations/section-7-species-presence-table-shortnose-sturgeon-greater. Accessed February 2023.

NOAA. 2022b. Section 7 Species Presence Table: Atlantic Sturgeon in the Greater Atlantic Region. Greater Atlantic Regional Fisheries Office. https://www.fisheries.noaa.gov/new-england-mid-atlantic/consultations/section-7-species-presence-table-atlantic-sturgeon-greater. Accessed February 2023.

NOAA. 2022c. Atlantic Sturgeon Critical Habitat Map and GIS Data. https://www.fisheries.noaa.gov/resource/map/atlantic-sturgeon-critical-habitat-map-and-gis-data. Accessed February 2023.

NOAA. 2022d. The Greater Atlantic Region ESA Section 7 Mapper. Last Updated August 2022. NOAA
Fisheries. https://www.fisheries.noaa.gov/resource/map/greater-atlantic-region-esa-section-7-mapper. Accessed February 2023.

NOAA. 2023a. Species Directory: Shortnose Sturgeon. https://www.fisheries.noaa.gov/species/shortnose-sturgeon. Accessed February 2023.

NOAA. 2023b. Species Directory: Atlantic Sturgeon. https://www.fisheries.noaa.gov/species/atlantic-sturgeon. Accessed February 2023.

NOAA. 2023c. Section 7: No Effect Determinations in the Greater Atlantic Region. https://www.fisheries.noaa.gov/new-england-mid-atlantic/consultations/section-7-no-effect-determinations-greater-atlantic-region#:~:text=If%20you%20determine%20that%20the%20action%20has%20no,STRESSORS%20are%20relevant%20to%20the%20action%20under%20consideration. Accessed February 2023.

Attachment A: Figures

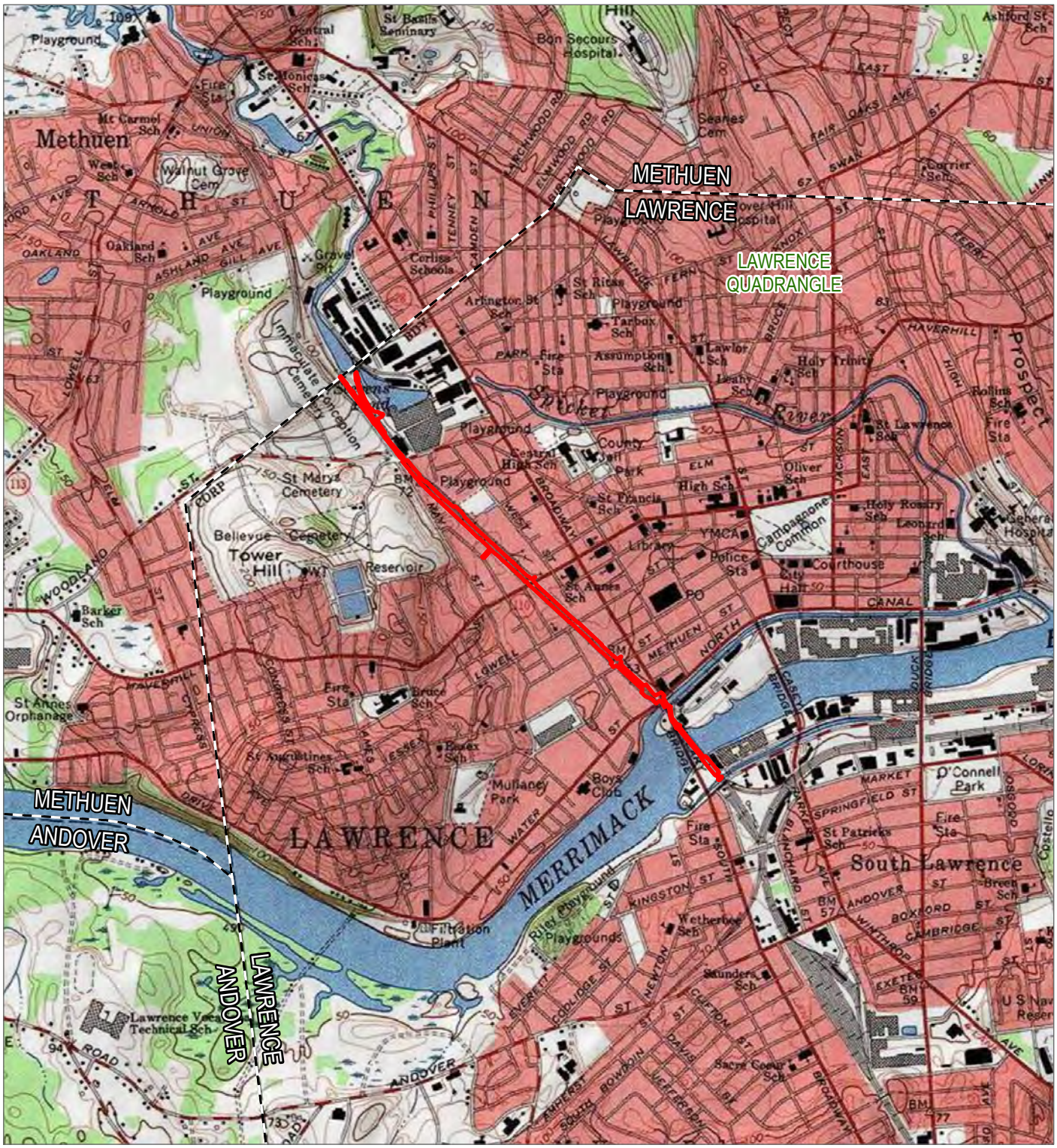

PROJECT AREA

MUNICIPAL BOUNDARY

N

0 1,000 2,000

FEET

1:24,000 1" = 2,000'

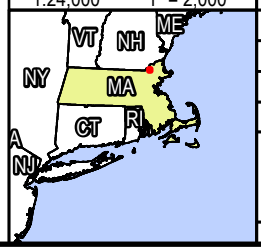

BASE MAP: USA TOPOGRAPHIC MAP, ESRI
DATA SOURCES: TRC

PROJECT:
LAWRENCE RAIL TRAIL

TITLE:
SITE LOCATION MAP
LAWRENCE, MA

DRAWN BY:	S. MOTURI	PROJ. NO.:	274047.0000.0000
CHECKED BY:	R. SPRING		
APPROVED BY:	C. MARTIN		**FIGURE 1**
DATE:	FEBRUARY 2023		

TRC

650 SUFFOLK ST,
WANNALANCIT MILLS,
LOWELL, MA 01854

FILE: LawrenceRailTrail

Coordinate System: NAD 1983 StatePlane Massachusetts Mainland FIPS 2001 Feet: Map Rotation: 0
-- Saved By: SMOTURI on 2/16/2023, 15:32:45 PM: File Path: T:\1-PROJECTS\LMRC\274047_LawrenceRailTrail_MA\2-APRX\LawrenceRailTrail.aprx: Layout Name: Fig1_Site_Location_USGS_8_5x11P

PROJECT AREA

MUNICIPAL BOUNDARY

ESSEX DAM

DIRECTION OF FLOW

N

0 1,000 2,000

FEET

1:24,000 1" = 2,000'

BASE MAP: MASSGIS ORTHOIMAGERY, 2021
DATA SOURCES: TRC

PROJECT:

LAWRENCE RAIL TRAIL

TITLE:

AERIAL MAP

LAWRENCE, MA

DRAWN BY:	S. MOTURI	PROJ. NO.:	274047.0000.0000
CHECKED BY:	R. SPRING		
APPROVED BY:	C. MARTIN		FIGURE 2
DATE:	DECEMBER 2023		

TRC

650 SUFFOLK ST,
WANNALANCIT MILLS,
LOWELL, MA 01854

FILE: LawrenceRailTrail

Coordinate System: NAD 1983 StatePlane Massachusetts Mainland FIPS 2001 Feet, Map Rotation: 0
– Saved By: SMOTURI on 12/7/2023, 16:08:05 PM, File Path: T:\1-PROJECTS\MRC\274047.LawrenceRailTrail_MA\2-APRX\LawrenceRailTrail.aprx, Layout Name: Fig2_Aerial_8_5x11P

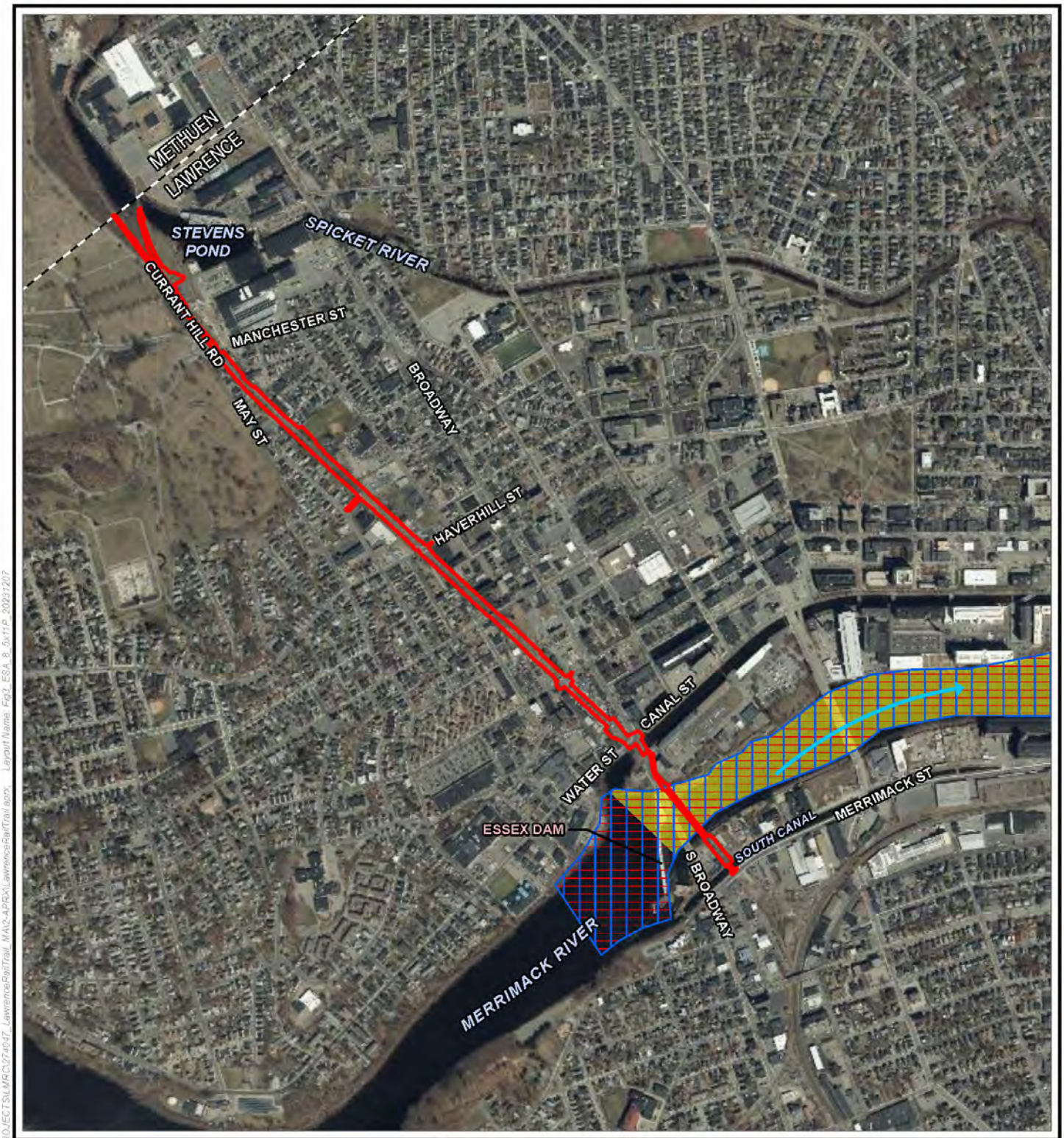

PROJECT AREA
MUNICIPAL BOUNDARY
ATLANTIC STURGEON
SHORTNOSE STURGEON
IN OR NEAR CRITICAL HABITAT
DIRECTION OF FLOW

BASE MAP: MASSGIS ORTHOIMAGERY, 2021
DATA SOURCES: NOAA, TRC

N

0 600 1,200
FEET
1:14,400 1" = 1,200'

PROJECT:
LAWRENCE RAIL TRAIL

TITLE: ESA LISTED SPECIES AND CRITICAL HABITAT IN THE PROJECT AREA
LAWRENCE, MA

DRAWN BY:	S. MOTURI	PROJ. NO.:	274047.0000.0000
CHECKED BY:	R. SPRING		
APPROVED BY:	C. MARTIN		FIGURE 3
DATE:	DECEMBER 2023		

TRC
650 SUFFOLK ST,
WANNALANCIT MILLS,
LOWELL, MA 01854

FILE: LawrenceRailTrail

Coordinate System: NAD 1983 StatePlane Massachusetts Mainland FIPS 2001 Feet Map Rotation: 0
-- Saved By: SMOTURI on 12/7/2023, 14:27:12 PM -- File Path: T:\1-PROJECTS\MRC\274047 LawrenceRailTrail_MA\2-APRX\LawrenceRailTrail.aprx -- Layout Name: Fig2_ESA_8_5x11P_20231207

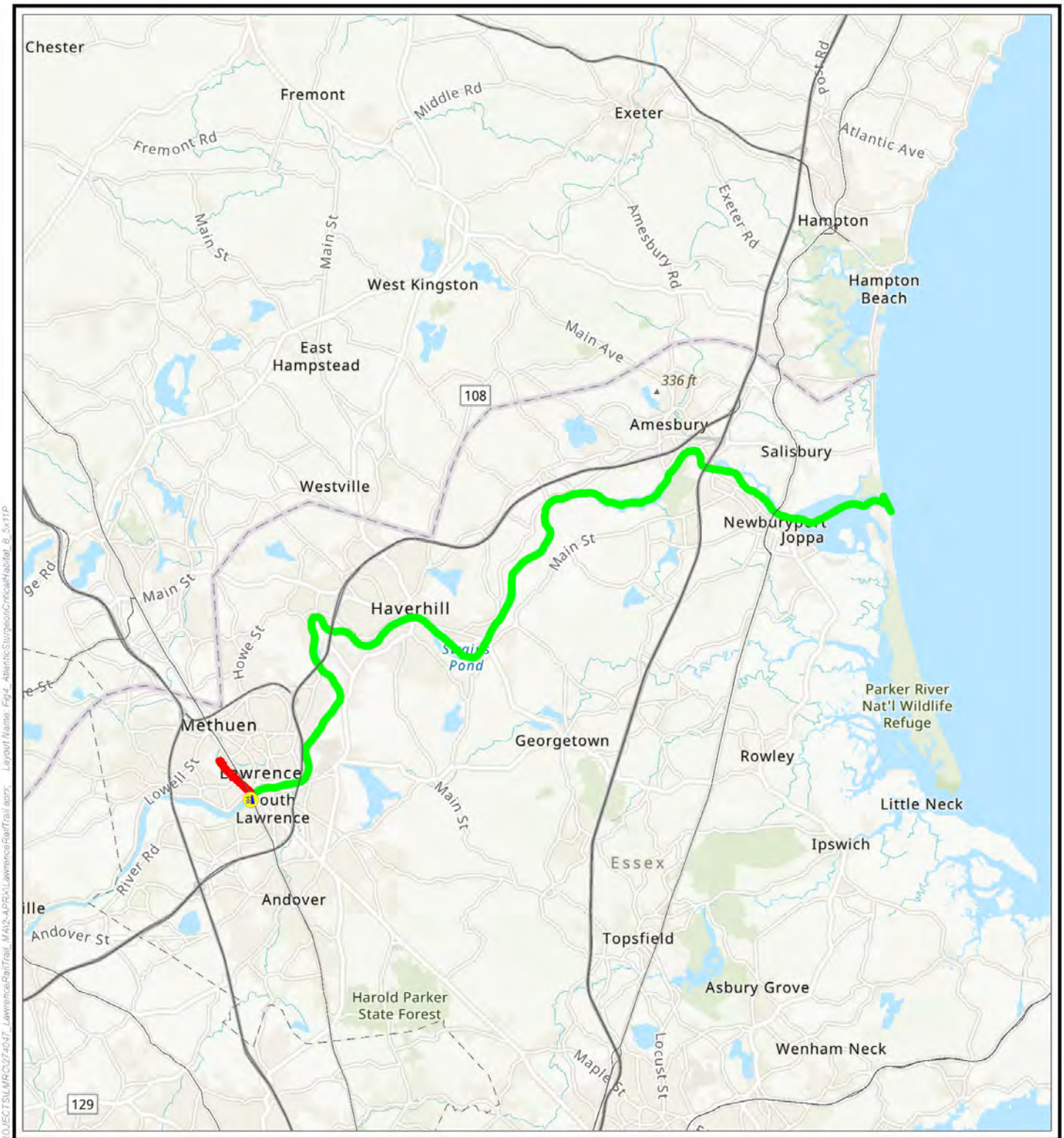

PROJECT AREA

STURGEON, ATLANTIC (ATLANTIC SUBSPECIES)[GULF OF MAINE DPS]

ESSEX DAM

BASE MAP: USA TOPOGRAPHIC MAP, ESRI
DATA SOURCES: NOAA, TRC

0 2 4
MILES
1:253,440 1" = 4 MI

PROJECT:
LAWRENCE RAIL TRAIL

TITLE:
ATLANTIC STURGEON CRITICAL HABITAT
LAWRENCE, MA

DRAWN BY:	S. MOTURI	PROJ. NO.:	274047.0000.0000
CHECKED BY:	R. SPRING		
APPROVED BY:	C. MARTIN		FIGURE 4
DATE:	DECEMBER 2023		

TRC

650 SUFFOLK ST,
WANNALANCIT MILLS,
LOWELL, MA 01854

FILE: LawrenceRailTrail

Coordinate System: NAD 1983 StatePlane Massachusetts Mainland FIPS 2001 Feet, Map Rotation: 0
Saved By: SMOTURI on 12/7/2023, 16:08:05 PM, File Path: T:\1-PROJECTS\MRC\274047_LawrenceRailTrail_MA\2-APRX\LawrenceRailTrail.aprx, Layout Name: Fig4_AtlanticSturgeonCriticalHabitat_8_5x11P

Attachment B: 75% Design Plans

Removed due to repetition within the SV application package. See above in Attachment B of the SV package for project permitting plans.

Attachment C: MESA Response Letter

MASSWILDLIFE

DIVISION OF
FISHERIES & WILDLIFE

1 Rabbit Hill Road, Westborough, MA 01581
p: (508) 389-6300 | f: (508) 389-7890
MASS.GOV/MASSWILDLIFE

January 05, 2023

Gregory Russo
TRC Environmental
650 Suffolk Street
Lowell MA 01854

RE: Project Location: Railroad ROW between Merrimack River and Immaculate Conception Cemetery
Town: LAWRENCE
NHESP Tracking No.: 23-41576

To Whom It May Concern:

Thank you for contacting the Natural Heritage and Endangered Species Program of the MA Division of Fisheries & Wildlife (the "Division") for information regarding state-listed rare species in the vicinity of the above referenced site. Based on the information provided, this project site, or a portion thereof, is located **within** *Priority Habitat 2154* (PH 2154) and *Estimated Habitat 1362* (EH 1362) as indicated in the *Massachusetts Natural Heritage Atlas* (15th Edition) for the following state-listed rare species:

Scientific name	Common Name	Taxonomic Group	State Status
Acipenser brevirostrum	Shortnose Sturgeon	Fish	Endangered
Acipenser oxyrinchus	Atlantic Sturgeon	Fish	Endangered

The species listed above are protected under the Massachusetts Endangered Species Act (MESA) (M.G.L. c. 131A) and its implementing regulations (321 CMR 10.00). State-listed wildlife are also protected under the state's Wetlands Protection Act (WPA) (M.G.L. c. 131, s. 40) and its implementing regulations (310 CMR 10.00). Fact sheets for most state-listed rare species can be found on our website (www.mass.gov/nhesp).

Please note that projects and activities located within Priority and/or Estimated Habitat **must** be reviewed by the Division for compliance with the state-listed rare species protection provisions of MESA (321 CMR 10.00) and/or the WPA (310 CMR 10.00).

Wetlands Protection Act (WPA)
If the project site is within Estimated Habitat and a Notice of Intent (NOI) is required, then a copy of the NOI must be submitted to the Division so that it is received at the same time as the local conservation commission. If the Division determines that the proposed project will adversely affect the actual Resource Area habitat of state-protected wildlife, then the proposed project may not be permitted (310 CMR 10.37, 10.58(4)(b) & 10.59). In such a case, the project proponent may request a consultation with the Division to discuss potential project design modifications that would avoid adverse effects to rare wildlife habitat.

A streamlined joint MESA/WPA review process is available. When filing a Notice of Intent (NOI), the applicant may file concurrently under the MESA on the same NOI form and qualify for a 30-day streamlined joint review. For a copy of the NOI form, please visit the MA Department of Environmental Protection's website: https://www.mass.gov/how-to/wpa-form-3-wetlands-notice-of-intent.

MA Endangered Species Act (MESA)

If the proposed project is located within Priority Habitat and is not exempt from review (see 321 CMR 10.14), then project plans, a fee, and other required materials must be sent to Natural Heritage Regulatory Review to determine whether a probable Take under the MA Endangered Species Act would occur (321 CMR 10.18). Please note that all proposed and anticipated development must be disclosed, as MESA does not allow project segmentation (321 CMR 10.16). For a MESA filing checklist and additional information please see our website: https://www.mass.gov/regulatory-review.

We recommend that rare species habitat concerns be addressed during the project design phase prior to submission of a formal MESA filing, as avoidance and minimization of impacts to rare species and their habitats is likely to expedite endangered species regulatory review.

This evaluation is based on the most recent information available in the Natural Heritage database, which is constantly being expanded and updated through ongoing research and inventory. If the purpose of your inquiry is to generate a species list to fulfill the federal Endangered Species Act (16 U.S.C. 1531 et seq.) information requirements for a permit, proposal, or authorization of any kind from a federal agency, we recommend that you contact the National Marine Fisheries Service at (978)281-9328 and use the U.S. Fish and Wildlife Service's Information for Planning and Conservation website (https://ecos.fws.gov/ipac). If you have any questions regarding this letter please contact Melany Cheeseman, Endangered Species Review Assistant, at (508) 389-6357.

Sincerely,

Everose Schlüter

Everose Schlüter, Ph.D.
Assistant Director

MASSWILDLIFE

DIVISION OF
FISHERIES & WILDLIFE

1 Rabbit Hill Road, Westborough, MA 01581
p: (508) 389-6300 | f: (508) 389-7890
MASS.GOV/MASSWILDLIFE

September 27, 2023

Daniel McCarthy
City of Lawrence
200 Common Street
Lawrence, Massachusetts 01840

Lawrence Conservation Commission
147 Haverhill St
Lawrence, MA 018401515

RE: Applicant: Daniel McCarthy, City of Lawrence
Project Location: Railroad ROW between Merrimack River and Immaculate Conception Cemetery
Project Description: Lawrence Manchester Rail Corridor (LMRC) Rail Trail
DEP Wetlands File No.: 195-0217
NHESP File No.: 23-8609
Heritage Hub Form ID: RC-65315

Dear Commissioners & Applicant:

The Natural Heritage & Endangered Species Program of the Massachusetts Division of Fisheries & Wildlife (the "Division") received a Notice of Intent with site plans (dated 8/16/23, revised date N/A) in compliance with the rare wildlife species section of the Massachusetts Wetlands Protection Act Regulations (310 CMR 10.58(4)(b), 10.59). The Division also received the MESA Review Checklist and supporting documentation for review pursuant to the MA Endangered Species Act Regulations (321 CMR 10.18).

WETLANDS PROTECTION ACT (WPA)

Based on a review of the information that was provided and the information that is currently contained in our database, the Division has determined that this project, as currently proposed, **will not adversely affect** the actual Resource Area Habitat of state-protected rare wildlife species. Therefore, it is our opinion that this project meets the state-listed species performance standard for the issuance of an Order of Conditions.

Please note that this determination addresses only the matter of rare wildlife habitat and does not pertain to other wildlife habitat issues that may be pertinent to the proposed project.

MASSACHUSETTS ENDANGERED SPECIES ACT (MESA)

Based on a review of the information that was provided and the information that is currently contained in our database, the Division has determined that this project, as currently proposed, **will not result in a prohibited Take** of state-listed rare species. This determination is a final decision of the Division of Fisheries and Wildlife pursuant to 321 CMR 10.18. Any changes to the proposed project or any additional work beyond that shown on the site plans may require an additional filing with the Division pursuant to the MESA. This project may be subject to

further review if no physical work is commenced within five years from the date of issuance of this determination, or if there is a change to the project.

Please note that this determination addresses only the matter of state-listed species and their habitats. If you have any questions regarding this letter please contact Melany Cheeseman, Endangered Species Review Assistant, at Melany.Cheeseman@mass.gov, (508) 389-6357.

Sincerely,

Everose Schlüter, Ph.D.
Assistant Director

cc:

Attachment C

Representative Photographs

Lawrence Manchester Rail Trail Project
Photographic Log

Photo #:	1
Date Taken:	9/19/2022
Direction:	East

Description:

View of wetland located under and surrounding the Lowell Street Bridge; facing location of where temporary and permanent impacts will occur.

Photo #:	2
Date Taken:	9/19/2022
Direction:	West

Description:

View of wetland facing away from the Lowell Street Bridge (to the west); location of where herbicide treatment/restoration will occur.

Lawrence Manchester Rail Trail Project
Photographic Log

Photo #:	3
Date Taken:	9/19/2022
Direction:	Northeast
Description:	

View of wetland facing Oliver Place; location of where herbicide treatment/restoration will occur.

Photo #:	4
Date Taken:	9/19/2022
Direction:	Northwest
Description:	

View of wetland facing northwest (past Lowell Street Bridge and Oliver Place); location of where herbicide treatment/restoration and some wetland mitigation will occur.

Lawrence Manchester Rail Trail Project
Photographic Log

Photo #:	5
Date Taken:	9/19/2022
Direction:	Northeast

Description:

View of Lowell Street Bridge and wetland that will receive herbicide treatment work/restoration on the eastern side of Lowell Street Bridge.

Photo #:	**6**
Date Taken:	9/19/2022
Direction:	North

Description:

View under Lowell Street Bridge.

DOCUMENT A00831

ARMY CORPS OF ENGINEERS

General Permits for the Commonwealth of Massachusetts

*** THIS PAGE IS INTENTIONALLY LEFT BLANK ***

General Permit No.: NAE-2022-02649 Final Effective Date: June 2, 2023
Applicant: General Public, Commonwealth of Massachusetts Expiration Date: June 1, 2028

Department of the Army
General Permits for the Commonwealth of Massachusetts

The New England District of the U.S. Army Corps of Engineers (USACE) hereby issues twenty-five (25) regional general permits (GPs) for activities subject to USACE jurisdiction in waters of the U.S., including wetlands, navigable waters within the Commonwealth of Massachusetts and adjacent ocean waters to the seaward limit of the outer continental shelf. The Massachusetts GPs (hereafter referred to as the MA GP or GP) are issued in accordance with USACE regulations at 33 CFR 320 – 332 [see 33 CFR 325.5(c)(1)]. These GPs establish criteria and contain permit conditions to ensure that the authorized activities have no more than minimal individual and cumulative adverse impacts to the environment.

This document contains the following sections:		Pages
SECTION I	Statutory Authorities & Regulated Activities	2
SECTION II	Review Categories & Application Procedures	3-7
SECTION III	Massachusetts General Permits	8-34
SECTION IV	General Conditions	35-51
SECTION V	Mitigation Standards	52-54
SECTION VI	Federal & State Agency Contact Information & Websites	55-56
SECTION VII	Definitions & Acronyms	57-66
APPENDIX A	Guidance for Section 106 NHPA Compliance in Massachusetts	67-71
APPENDIX B	Pre-Construction Notification	72-77
APPENDIX C	Self-Verification Notification	78-81
APPENDIX D	Pre-Construction Notification Application Checklist	82-88

In issuing these GPs, the Federal Government does not assume any liability for the following: (a) damages to the permitted project or uses thereof as a result of other permitted or unpermitted activities or from natural causes; (b) damages to the permitted project or uses thereof as a result of current or future activities undertaken by or on behalf of the U.S. in the public interest; (c) damages to persons, property or to other permitted or unpermitted activities or structures caused by the activity authorized by any of the GPs; (d) design or construction deficiencies associated with the permitted work; or (e) damage claims associated with any future modification, suspension or revocation of these permits.

Tammy R. Turley 02 June 2023

Tammy R. Turley Date
Chief, Regulatory Division

SECTION I. STATUTORY AUTHORITES & REGULATED ACTIVITIES

1. Work Requiring USACE Authorization

a. Section 10: Work and structures that are located in, over, under or that affect navigable waters of the United States (U.S.) (see 33 CFR 329). The USACE regulates these activities under section 10 of the Rivers and Harbors Act of 1899 (see 33 CFR 322).

b. Section 404: The discharge of dredged or fill material into waters of the U.S (see 33 CFR 328). The USACE regulates these activities under Section 404 of the Clean Water Act (CWA). The term "discharge of dredged or fill material" also includes certain discharges resulting from excavation. Applicants should contact USACE to determine if a particular excavation discharge occurring within waters of the U.S., is a regulated activity. See 33 CFR 323.4 of the CWA for exempted activities.

For additional information on the limits of USACE jurisdiction, please see: https://www.nae.usace.army.mil/Portals/74/docs/regulatory/JurisdictionalLimits/Jurisdictional_Limits_Brochure.pdf

2. Authority to Issue General Permits

a. In accordance with 33 CFR 322.2(f), 325.2(e)(2), and 325.5(c), USACE may issue regional general permits authorizing activities under Section 10 of the RHA.

b. In accordance with Section 404(e) of the CWA, 33 USC 1344(e), and 33 CFR 323.2(h), 325.2(e)(2), and 325.5(c), after notice and opportunity for public hearing, USACE may issue regional general permits for any category of activities involving discharges of dredged or fill material if the activities in such category are similar in nature, will cause only minimal adverse environmental effects when performed separately, and will only have minimal cumulative adverse effect on the environment.

3. Related Laws

33 CFR 320.3 includes a list of related laws including, but not limited to, Section 408 of the Rivers and Harbors Act of 1899, Section 401 of the Clean Water Act, Section 402 of the Clean Water Act, Section 307(c) of the Coastal Zone Management Act of 1972, Section 106 of the National Historic Preservation Act of 1966, Section 7 of the Endangered Species Act, the Fish and Wildlife Coordination Act of 1956, the Magnuson-Stevens Fishery Conservation and Management Act, the Fish and Wildlife Coordination Act, Section 302 of the Marine Protection, Research and Sanctuaries Act of 1972, Section 7(a) of the Wild and Scenic Rivers Act, the Golden Eagle Protection Act, and the Migratory Bird Treaty Act.

SECTION II. REVIEW CATEGORIES & APPLICATION PROCEDURES

To qualify under these GPs, the design, construction, and maintenance associated with each proposed activity must meet the terms and eligibility criteria listed in Section III, all applicable general conditions (GCs) in Section IV, and any specific mitigation requirements in Section V. Applicants should first review the GPs to see if a project is eligible for authorization under one or more of the GPs within this document. Any activity not specifically listed may still be eligible for authorization under these GPs; applicants are advised to contact USACE for specific eligibility determination.

Please note that these GPs allow for Self-Verification (SV) contingent upon meeting all criteria and with full adherence to all GCs. Projects that do not qualify for SV, may meet criteria for Pre-Constriction Notification (PCN). Tables are provided under each activity, which outline criteria for SV and PCN. Activities that do not meet criteria for SV or PCN may require review as an Individual Permit (IP). Activities may require a PCN or IP as noted in Sections III and/or IV of this GP. Notwithstanding compliance with the terms of these GPs, USACE retains discretionary authority to require either PCN review or IP review on a case-by-case basis for any project based on concerns for the environment or for any of the other public interest factors found in 33 CFR 320.4(a). These GPs also do not replace or change those activities identified as exempt from USACE regulation (33 CFR 323.4).

1. Pre-Application Assistance

Prospective applicants may request a pre-application meeting to address any questions they may have. USACE may also request a pre-application meeting or additional information to facilitate review of the request. Pre-application meetings and/or site visits help streamline the authorization process by alerting the prospective applicant to potentially time-consuming factors that may arise during the evaluation of their project (e.g., avoidance, minimization and compensatory mitigation requirements, historic properties, endangered species, essential fish habitat, impacts to federal projects, and/or dredging of contaminated sediments).

To schedule a pre-application meeting, present questions, or if you need further assistance, please contact USACE at:

Email: cenae-r-ma@usace.army.mil (strongly preferred) Phone: (978) 318-8338

Mail: U.S. Army Corps of Engineers
New England District
Regulatory Division, Massachusetts Section
696 Virginia Road
Concord, MA 01742

2. Submitting a Request

Please follow the procedures outlined in Sections II.2-5 when requesting an SV or applying for PCN authorization for activities covered by these GPs. The GPs are provided in Section III below. For SV-eligible projects, the Self-Verification Notification (SVN) must be submitted within 30 days of commencing work. Otherwise, a Pre-Construction Notification (PCN) must be submitted for work that is not SV-eligible. Please include appropriate drawings and attachments and submit your request using the mailbox identified in Section II.4 or II.5 below. USACE will promptly confirm receipt of your request and notify you in the event additional information is required. Guidance on

how to submit electronic correspondence is located on the NAE Regulatory website here: https://www.nae.usace.army.mil/Missions/Regulatory/Submitting-Electronic-Correspondence.

3. Local, State & Federal Approvals

Applicants are responsible for applying for and obtaining any required local, state, and federal permits or approvals. These must be obtained prior to the commencement of work in waters. Such authorizations may include a Water Quality Certification, a Coastal Zone Management Act consistency determination, and other approvals as noted below. Authorization under these GPs does not obviate the need for the permittee to obtain other Federal, State, or local permits, approvals, or authorizations required by law.

I. Water Quality Certification under Section 401 of the Federal Clean Water Act (33 USC 1341).
Applicants are responsible for determining the appropriate 401 Water quality Certification (WQC) requirements and submitting this information to the USACE at the time of their PCN application or when completing their SVN. Applicants that are unsure of whether their activity has been certified should contact MassDEP, or EPA Region 1 when the activity is located on tribal lands, for a determination. The 401 WQC requirement must be satisfied by acquiring one of the following WQCs from MassDEP (see GC 8):

General 401 WQC: The MassDEP issued a WQC on April 21, 2023 conditionally certifies all activities in GPs 1 – 24 eligible for SV and PCN so long as the activity is described in 314 CMR 9.03, and is not an activity described in 314 CMR 9.04, and so long as the activity meets all other requirements, terms and conditions of this WQC. The MassDEP WQC also conditionally certifies activities described in GP 25 so long as the activity meets all other conditions of the WQC. Emergency projects described in GP 25 must obtain an emergency certification or otherwise be authorized pursuant to 310 CMR 10.06, qualify under a Severe Weather Emergency Declaration pursuant to 310 CMR 10.06(8) issued by the MassDEP, or meet the requirements of 9.12(2) or (3) in order to be certified under the WQC

Applicants should refer to the following link to determine if their activity is eligible: *https://www.nae.usace.army.mil/Missions/Regulatory/ State-General-Permits/ Massachusetts-General-Permit/*. If eligible, you must comply with all applicable WQC conditions. Activities listed in 314 CMR 9.03 that are not exempt from the Wetland Protection Act must have a valid Final Order of Conditions (OOC) or Final Restoration Order of Conditions pursuant to 310 CMR 10.00 to be eligible under the General 401 WQC.

Individual 401 WQC: In the event the proposed activity is not covered by the general WQC, applicants shall contact MassDEP and apply for an individual 401 WQC if their activity does not qualify for a General 401 WQC as outlined above. MassDEP may issue, waive, or deny the individual 401 WQC on a case-by-case basis. All activities listed in 314 CMR 9.04 must obtain an individual 401 WQC from MassDEP to be eligible under these GPs. When an Individual 401 WQC is required for *PCN activities*, the applicant shall submit their Individual 401 WQC application concurrently to MassDEP and the USACE to comply with 40 CFR 121.

Activities Proposed on Tribal Lands: When an activity is proposed on Tribal lands, the applicant shall refer to the general 401 WQCs granted by the Environmental Protection Agency (EPA), Region 1 on May 15, 2023. These 401 WQCs are located on the USACE Regulatory website: https://www.nae.usace.army.mil/Missions/Regulatory/State-General-Permits/Massachusetts-General-Permit/.

II. Coastal Zone Management Act Federal Consistency Concurrence pursuant to Section 307 of the CZMA of 1972, as amended. Federal consistency concurrence is required for all activities located within the coastal zone, unless determined otherwise by the Massachusetts Office of Coastal Zone Management (MA CZM) (see GC 9). As applicable, this requirement must be satisfied by acquiring one of the following from the MA CZM:

General CZM Federal Consistency Concurrence (General Concurrence): MA CZM has granted General Concurrence for all SV and PCN activities for GPs 1-25 and this can be found at: https://www.nae.usace.army.mil/Missions/Regulatory/State-General-Permits/Massachusetts-General-Permit/. The applicant must obtain all applicable permits and approvals prior to the commencement of work in USACE jurisdiction (i.e., construction begins on site). For SVs, General Concurrence is automatically granted and no further action is required from the applicant. For PCNs, the USACE will coordinate with MA CZM to acquire General Concurrence as part of the PCN application review. During review of the PCN application, USACE may request additional information from the applicant to support CZM's evaluation of the activity.

Individual CZM Federal Consistency Concurrence (Individual Concurrence): In certain cases, MA CZM may elevate any GP activity 1-25 to require Individual Concurrence. The applicant must contact MA CZM and follow the procedures to obtain Individual Concurrence as determined appropriate by MA CZM.

The MA CZM program includes five regional offices that serve 78 coastal municipalities. The following map provides more information about these offices: https://www.mass.gov/service-details/czm-regions-coastal-communities-and-coastal-zone-boundary

III. Other Approvals: Approvals typically required in Massachusetts include, but are not limited to, a Chapter 91 Permit/License, Massachusetts Environmental Protection Act (MEPA) review, Wetlands Protection Act Order of Conditions, and/or Aquaculture Certification. *Applicants should also be aware that USACE may not be able to render a permit decision in the event the proposed activity is denied by another local, state and/or federal agency.*

4. Procedures for Self-Verification (SV) Eligible Projects

If the activity is eligible for an SV, the Self-Verification Notification (SVN) must be completed prior to the start of project construction and submitted to USACE within 30 days of commencing work. The purpose of the SVN is to provide applicants with a tool to assist them when determining if the activity as proposed is SV-eligible. The following GPs do not require submission of the SVN: GP 1 (SV #1), GP 3 (SV #2-3), GP 4 (SV #2), GP 11, GP 12 (note #2), GP 14 (see note), GP 15 (see note), and GP 24 (SV #3). **For the activities not listed above, the SVN must be completed prior to the start of work and be kept on site at all times during project construction.** The applicant shall not begin work for SV-eligible activities until they have completely verified the bulleted items below.

Digital submittals by email are **strongly encouraged** to facilitate the most efficient processing of the SVN submittal. Please communicate with USACE staff if you are unable to provide a digital copy. Addresses are cenae-r-ma-sv@usace.army.mil (email) or Regulatory Division, U.S. Army Corps of Engineers, New England District, 696 Virginia Road, Concord, MA 01742-2751 (mail).

Eligible SV Activities:

- Are subject to USACE jurisdiction (see GC 2); and
- Qualify for one or more of the GPs within this document (Section III); and
- Meet the GCs within this document (Section IV); and

- When required, are supported by a complete SVN (Appendix C); and
- Receive all other required local, State, and/or Federal approvals.

5. Procedures for Pre-Construction Notification (PCN) Eligible Projects

For activities that require a PCN, an application to and written authorization from USACE is required. *No work requiring a PCN may proceed until the applicant receives written authorization from USACE verifying that the activity is authorized.* The verification letter may include special conditions that the applicant must comply with. When possible, it is *highly* recommended that PCN application materials are submitted at least 90 days before the target start date to allow for USACE evaluation and any necessary agency consultations. PCN applications shall demonstrate in writing how the proposed activity complies with all GCs, as applicable to their activity.

Digital submittals by email are **strongly encouraged** to facilitate the most efficient processing of the PCN application. Please communicate with USACE staff if you are unable to provide a digital copy. Addresses are cenae-r-ma@usace.army.mil or Regulatory Division, U.S. Army Corps of Engineers, New England District, 696 Virginia Road, Concord, MA 01742-2751 (mail).

Eligible PCN Activities:

- Are subject to USACE jurisdiction (see GC 2); and
- Qualify for one or more of the GPs within this document (Section III); and
- Meet the GCs within this document (Section IV); and
- Comply with the Mitigation Standards within this document (Section V); and
- Are supported by a complete PCN document (Appendix B); and
- When required, are supported by the submittal of project information to the appropriate parties identified in Appendix A; and
- Receive all other required local, State, and/or Federal approvals.

6. Interagency Review Procedures

The USACE reserves the opportunity to coordinate PCN activities with Federal and State agencies to ensure that the proposed activity results in no more than a minimal impact to the aquatic environment. In some cases, USACE may require project modifications involving avoidance, minimization, and/or compensatory mitigation for unavoidable impacts to ensure the net effects of a project are minimal. The USACE determines, after review and coordination with the agencies and/or the applicant, if PCN applications:

a. Meet the terms and conditions of the GP as proposed;
b. Require additional information;
c. Require avoidance, minimization, compensatory mitigation, construction sequencing, project modification, or other special conditions to avoid or minimize adverse impacts to the aquatic environment;
d. Require individual permit review regardless of whether the terms and GCs of these GPs are met, based on concerns for the aquatic environment or any other factor of the public interest (see Section 9 below).

For activities requiring a PCN, the applicant must wait for written authorization from USACE before commencing activities in waters of the U.S. Beginning work for PCN required activities without a USACE written authorization is a violation of these GPs, and the terms and conditions of this document. The applicant may be subjected to an enforcement action by USACE and/or the Environmental Protection Agency (EPA).

7. Construction of Solid Fill Structures and Fills Along the Coastline or Baseline from Which the Territorial Sea is Measured.

Projects involving the construction of solid fill structures or discharge of fill that may extend beyond the coastline or the baseline from which the territorial sea is measured (i.e., mean low water) will require a PCN. The USACE will submit a description of the proposed work and a copy of the plans to the Solicitor, Department of the Interior, Washington, DC 20240, and request comments concerning the effects of the proposed work on the outer continental rights of the United States. These comments will be included in the administrative record of the application. After completion of permit review, the record will be forwarded to the Chief of Engineers. The decision on the application will be made by the Secretary of the Army after coordination with the Attorney General.

8. Emergency Activities

Per 33 CFR 325.2(e)(4), an emergency is limited to a situation that would result in an unacceptable hazard to life, a significant loss of property, or an immediate, unforeseen, and significant economic hardship if corrective action requiring a permit is not undertaken within a time period less than the normal time needed to process an application under standard procedures. Emergency work shall be limited to that which is necessary to stabilize and secure the situation. Additional work needed for final repairs shall not be completed until approval is obtained through the appropriate, non-emergency process. Emergency work is subject to the same terms and conditions of these GPs as non-emergency work, and similarly, must qualify for authorization under these GPs; otherwise, an IP is required. *See GP 25 Emergency Situations for additional information.*

9. Individual Permit

Projects that do not meet the terms and conditions of this GP may require review as an IP (33 CFR 325.5 (b)). Proposed work in this category will require a separate Federal application for an individual permit from USACE (33 CFR 325.1). In addition, USACE retains discretionary authority on a case-by-case basis to elevate GP-eligible activities to an IP based on concerns for the environment or any other factor of the public interest (33 CFR 320.4 (a)). Applicants are required to submit the appropriate application materials directly to USACE as early as possible to expedite the permit review process. General information and application forms can be obtained at our website or by contacting our office at cenae-r-ma@usace.army.mil or (978) 318-8338. Individual 401 WQC and/or CZMA Federal consistency concurrence from the appropriate MA agencies are required before USACE can issue an individual permit. Applying for an IP does not relieve the applicant from their obligation to obtain all required Federal, State and/or local approvals.

10. Compliance

Applicants shall ensure compliance with all applicable GPs in Section III, GCs in Section IV, and any special conditions included in USACE verification letters. Noncompliance with these GPs, GCs, and special conditions may subject the applicant to criminal, civil, or administrative penalties, and/or an ordered restoration, and/or the permit may be modified, suspended or revoked by USACE. The USACE will consider any activity requiring USACE authorization to be noncompliant if that activity does not comply with all GP terms and conditions at all times, including while the project is under construction and when work is completed.

SECTION III. MASSACHUSETTS GENERAL PERMITS

Applicants are encouraged to review Sections I & II prior to submitting an application to confirm that the activity as proposed complies with all terms and conditions of the 2023 MA GPs. Applicants are also encouraged to review the definitions in Section VII, Definitions & Acronyms, of this document. Several terms are frequently used throughout the GPs, and it is important for the reader to understand these terms. If seeking verification for an activity previously verified under the 2018 MA GPs, please contact the USACE to discuss permitting needs in advance of submitting an application.

General Permits

1. Aids to Navigation and Temporary Recreational Structures
2. Maintenance
3. Moorings
4. Structures in Navigable Waters of the U.S.
5. Boat Ramps and Marine Railways
6. Utility Lines, Oil or Natural Gas Pipelines, Outfall Or Intake Structures, and Appurtenant Features
7. Dredging, Disposal of Dredged Material, Beach Nourishment, Rock Removal and Rock Relocation
8. U.S. Coast Guard Approved Bridges
9. Bank and Shoreline Stabilization
10. Aquatic Habitat Restoration, Enhancement, and Establishment Activities
11. Fish and Wildlife Harvesting and Attraction Devices and Activities
12. Response Operations, Oil and Hazardous Substances
13. Cleanup of Hazardous and Toxic Waste
14. Scientific Measurement Devices
15. Survey Activities
16. Land and Water-Based Renewable Energy Generation Facilities and Hydropower Projects
17. Residential, Commercial and Institutional Developments, and Recreational Facilities
18. Aquaculture
19. Mining Activities
20. Living Shorelines
21. Agricultural Activities
22. Reshaping Existing Drainage Ditches, Construction of New Ditches, and Mosquito Management
23. Linear Transportation Projects and Wetland/Stream Crossings
24. Temporary Construction, Access, and Dewatering
25. Emergency Situations

GP 1. AIDS TO NAVIGATION AND TEMPORARY RECREATIONAL STRUCTURES (Authority: §10)	
(a) The placement of aids to navigation and regulatory markers that are approved by and installed in accordance with the requirements of the U.S. Coast Guard (USCG). See 33 CFR, Part 66; and (b) Temporary buoys, markers, and similar structures placed for recreational use during specific events such as water skiing competitions and boat races or seasonal use. See GC 16.	
Self-Verification Eligible	**Pre-Construction Notification Required**
1. Aids to navigation and regulatory markers approved by and installed in accordance with the requirements of the USCG. 2. Temporary buoys, markers and similar structures that are: (a) placed for recreational use during specific events and removed within 30 days after event; or (b) placed during winter events on ice and removed before spring thaw. These structures must be authorized by the local harbormaster, not located within an FNP or its buffer zone, and not located in saltmarsh or tidal vegetated shallows.	1. Impacts in saltmarsh or tidal vegetated shallows. 2. Activities that are not SV eligible.
Note: An SVN submittal to USACE is not required for work authorized under SV #1 above.	

GP 2. MAINTENANCE (Authorities: §10 and §404)

Repair, rehabilitation, or replacement of any previously authorized[1], currently serviceable structure, or fill, or of any currently serviceable structure or fill authorized by 33 CFR 330.3 (activities occurring before certain dates), provided that the structure or fill is not to be put to uses differing from those uses specified or contemplated for it in the original permit or the most recently authorized modification. Minor deviations in the structure's configuration or filled area, including those due to changes in materials, construction technique requirements of other regulatory agencies, or current construction codes or safety standards that are necessary to make the repair, rehabilitation, or replacement are authorized. This GP also authorizes temporary structures, fills, and work, including the use of temporary mats, necessary to conduct the activities above. Maintenance dredging and beach nourishment are not eligible under GP 2 (see GP 7). Stream crossing modifications (including sliplining), replacements or extensions are not eligible under GP 2 (see GPs 6, 17, 23). *See GP 25 Emergency Situations for expedited review of emergency activities.*

Not authorized under GP 2 (IP required): (a) Permanent impacts in >1 acre in non-tidal waters and/or wetlands; or (b) Permanent impacts >1/2 acre in tidal waters; >1000 SF in saltmarsh, mud flats, riffle and pool complexes, or non-tidal vegetated shallows; or >100 SF in tidal vegetated shallows; or (c) Temporary impacts >1 acre in tidal waters; >5000 SF in saltmarsh, mud flats, riffle and pool complexes, or non-tidal vegetated shallows; or >1000 SF in vegetated shallows; (d) New stream channelization or stream relocation projects (e.g., those in response to storm or flood events).

Self-Verification Eligible

Maintenance activities that meet all of the following terms:

1. In non-tidal waters, the combined permanent and temporary impacts extending beyond the original footprint are ≤5,000 SF[2] and not located in vegetated shallows or riffle and pool complexes.

2. In tidal waters, the combined permanent and temporary impacts extending beyond the original footprint are ≤5,000 SF, ≤1,000 SF in mudflats and/or natural rocky habitat, and not located in saltmarsh and tidal vegetated shallows.

3. Minor deviations in the repair, rehabilitation, or replacement of previously authorized, currently serviceable structures or fills.

4. Bulkhead replacement in tidal and non-tidal waters via installation of new bulkhead within 18 inches of the existing bulkhead and associated backfill.

5. Drawdown of an impoundment for dam/levee repair provided it does not exceed 18 months and one growing season (April through September).

Pre-Construction Notification Required

1. Discharges associated with removal of accumulated sediments and debris in the vicinity of existing structures, including intake and outfall structures and associated canals.

2. The removal of sediment outside the immediate vicinity of existing structures (e.g., bridges, culverted road crossings, water intake structures, etc.) that is ≥200 linear feet. This activity is limited to the minimum necessary to restore the waterway in the vicinity of the structure to the approximate dimensions existing when the structure was built.

3. Dam and flood control or levee repair, rehabilitation, or replacement involves:
   a. A change in the flood elevation or permanent water surface elevation of the impoundment; or
   b. Drawdown of impoundment for construction exceeding one growing season (see SV eligible #5);
   c. Any modification that changes the character, scope, or size of the original fill design; or
   d. Does not meet SV eligible 1-7.

4. Installation of steel piles, including steel sheet piles, that cannot be done in the dry and where NOAA-ESA listed species are mapped as present.

[1] Some maintenance activities may not be subject to regulation under Section 404 of the CWA in accordance with 33 CFR 323.4(a)(2). Per 33 CFR 330.3, Vested dates are: a) Work performed and structures installed before December 18, 1968 (Section 10); and b) Fill placed before July 25, 1975 (Section 404).
[2] This excludes dam projects that may require a temporary drawdown with impacts >5,000 SF in non-tidal waters. Instead, the drawdown shall comply with SV #5 to be eligible under Self-Verification.

6. Any stream channel modification is limited to the minimum necessary for the repair, rehabilitation, or replacement of the structure or fill; such modifications, including the removal of material from the stream channel, must be immediately adjacent to the project or within the boundaries of the structure or fill. 7. Work to previously approved tide gates not affecting upstream tidal resource areas.	5. Activities located in the Connecticut River or Merrimack River, unless they are completed in the dry or when the tide is waterward of the work area. 6. Activities on USACE properties & USACE-controlled easements. 7. Activities that do not require an IP. Activities that do not require a PCN or an IP may be SV eligible.
Notes: 1. This authorizes the repair, rehabilitation, or replacement of any previously authorized structure or fill that does not qualify for the CWA §404(f) exemption for maintenance. See 33 CFR 323.4(a)(2). Prior USACE permits may have included authorization to maintain the activity, in which case authorization under this GP is not necessary. 2. See GC 22 for information on temporary construction mats.	

GP 3. MOORINGS (Authority: §10)

New moorings and mooring fields; the relocation of previously authorized moorings; expansions, boundary reconfigurations or modifications of previously authorized mooring fields; and maintenance and replacement of moorings.

Not authorized under GP 3 (IP required): (a) Moorings or mooring fields converted to or associated with a new boating facility[1]; or (b) Moorings in a USACE Federal Navigation Anchorage or USACE Federal Navigation Channel, except municipal-operated mooring fields.

Self-Verification Eligible	Pre-Construction Notification Required
1. New or relocated moorings that meet all the following terms: a. Authorized by a local harbormaster/ municipality under MGL Chapter 91 §10A; and b. No interference with navigation; and c. Single boat, single-point and non-commercial; and d. Not associated with a boating facility, and e. Neither placed within nor impact tidal vegetated shallows (e.g., eelgrass); and f. Not located within a USACE Federal navigation project (FNP) or the FNP buffer zone. 2. Existing, authorized moorings are converted from traditional moorings to low impact mooring technology (see note below) and/or helical anchors. 3. Maintenance and replacement of moorings authorized by the USACE.	1. New mooring fields; or expansions, boundary reconfigurations or modifications of existing, authorized mooring fields. 2. Moorings located such that they, and/or vessels docked or moored at them, are within the buffer zone of the horizontal limits of a Federal Anchorage. The buffer zone is equal to 3 times the authorized depth of that channel (see GC 15). 3. New individual moorings located in saltmarsh, mudflats, natural rocky habitat, and tidal vegetated shallows. Locating moorings these areas should be avoided to the maximum extent practicable. If these areas cannot be avoided, plans should show conservation mooring or low-impact mooring systems that prevent mooring chains from resting or dragging on the bottom substrate at all tides, where practicable. USACE may require a survey in areas previously mapped as containing eelgrass or within 100 ft. of existing eelgrass beds to document presence or absence of eelgrass and to determine the appropriate type and amount of compensatory mitigation for impacts to eelgrass. 4. Replacement moorings located in tidal vegetated shallows. 5. Moorings that are not SV eligible and do not require an IP.

Notes:

1. Low impact mooring systems, including conservation moorings, are encouraged to minimize impacts of chain scouring from conventional moorings during the tidal cycle.
2. An SVN submittal to USACE is not required for work authorized under SV #2-3 above.

[1] Boating facilities are marinas, yacht clubs, boat clubs, boat yards, dockominiums, town facilities, land/homeowner's associations, etc. that provide for a fee, rent or sell mooring or docking space. Not classified as boating facilities are municipal moorings or municipal mooring fields that charge an equitable user fee based only on the actual costs incurred.

GP 4. STRUCTURES IN NAVIGABLE WATERS OF THE U.S. (Authority: §10 & §404)

New, expansions, reconfigurations or modifications of structures for navigational access in waters of the U.S. including but not limited to temporary/seasonal or permanent pile and pole-supported piers, floats, stairs, shore outhauls, and boat and float lifts.

Not authorized under GP 4 (IP required): (a) Structures associated with a new boating facility; (b) Structures in a USACE Federal anchorage or channel; or (c) Artificial reefs.

Self-Verification Eligible

1. Private, non-commercial piers, floats and lifts that meet all the following terms:

a. Piers and floats in: (i) Tidal waters total ≤600 SF combined; and (ii) Non-tidal navigable waters of the U.S. total ≤600 SF combined; and

b. Piers are ≤4 feet wide and ≥6 feet above the marsh substrate (the height is measured from the marsh substrate to the bottom of the lowest longitudinal support); and

c. Floats and lifts in tidal waters and non-tidal navigable waters of the U.S. are ≥24 inches above the substrate during all tidal cycles. Float stops are preferred when site conditions warrant them (i.e., low tide exposes substrate), and skids can only be used in areas where piles are not feasible and on sandy or hard bottom substrates; and

d. Piers, floats and lifts: (i) Are ≥25 feet from previously mapped or existing vegetated shallows, or riparian property line extensions; (ii) Extend ≤25% of the waterway width in non-tidal navigable waters of the U.S. or MHW in tidal navigable waters of the U.S.

e. Installation of ≤12-inch diameter timber piles. Installation of ≥12-inch diameter piles of any material type when installed in the dry.

2. Fenders and similar structures.

Pre-Construction Notification Required

1. Shore outhauls.
2. Expansions, modifications, or new reconfiguration zones at any authorized boating facility.
3. New, expansions, reconfigurations, reconfiguration zones, or modifications of structures that provide public, community or government recreational uses such as boating, fishing, swimming, access, etc.
4. Installation of steel piles, including steel sheet piles, that cannot be done in the dry and where NOAA-ESA listed species are mapped as present.
5. Located within the buffer zone of the horizontal limits of an FNP (GC 15).
6. Miscellaneous structures.
7. Impacts in tidal vegetated shallows.
8. Structures that are not SV eligible and do not require an IP.

Notes:

1. See GC 19 regarding pile driving and pile removal in navigable waters and
2. See GC 20 regarding time of year restrictions in tidal waters.
3. Boating facilities are facilities that provide for a fee, rent, or sell mooring space, such as marinas, yacht clubs, boat clubs, boat yards, town facilities, dockominiums, etc. Pile supported structures with no discharges of dredged or fill material are not regulated by USACE in non-navigable waters.
4. A SVN submittal to USACE is not required for SV #2 above.

GP 5. BOAT RAMPS AND MARINE RAILWAYS (Authorities: §10 and §404)

Activities required for the construction of boat ramps and marine railways, including excavation and fill.

Not authorized under GP 5 (IP required): (a) Permanent impacts that are >1 acre in non-tidal waters of the U.S., >½ acre in tidal waters; >1000 SF in saltmarsh, mud flats, riffle and pool complexes, or non-tidal vegetated shallows; or >100 SF in tidal vegetated shallows; (b) Temporary impacts in tidal waters that are >1 acre; >5000 SF in saltmarsh, mud flats, or riffle and pool complexes; or >1000 SF in vegetated shallows[1]; or (c) dredging in navigable waters of the U.S. (see GP 7).

Self-Verification Eligible	Pre-Construction Notification Required
1. In non-tidal waters, the combined permanent and temporary impacts are (a) ≤5,000 SF, and (b) not located in riffle and pool complexes and non-tidal vegetated shallows.	1. Boat ramps are located within 25 feet of property line extensions unless the properties are owned by the same owner. The USACE may require a letter of no objection from the abutter(s).
2. In tidal waters, the combined permanent and temporary impacts are (a) ≤5,000 SF, (b) ≤1,000 SF in mudflats and/or natural rocky habitat, and (c), not located in saltmarsh and tidal vegetated shallows.	2. Activities that are not eligible for SV and do not require an IP.

GP 6. UTILITY LINES, OIL OR NATURAL GAS PIPELINES, OUTFALL OR INTAKE STRUCTURES, AND APPURTENANT FEATURES (Authorities: §10 & §404)

Activities required for: (a) The construction, maintenance, repair or removal of utility lines, oil or natural gas pipelines[1], outfall or intake structures[2], and appurtenant features including the associated excavation, backfill, or bedding for these structures. (b) The construction, maintenance, or expansion of substations and other appurtenant facilities associated with a utility line, oil or natural gas pipeline, and outfall or intake structure in non-tidal waters of the U.S.; and (c) The construction and maintenance of foundations for overhead utility line towers, poles, and anchors in tidal and non-tidal waters of the U.S., provided the foundations are the minimum size necessary and separate footings for each tower leg (rather than a larger single pad) are used where feasible. This GP authorizes the construction of access roads to facilitate construction of the above activities provided the activity, in combination with all other activities included in one single and complete project, does not exceed the thresholds identified below (IP required). Access roads used solely for construction of the utility line must be removed upon completion of the work. This GP also authorizes temporary structures, fills, and work, including the use of temporary mats, necessary to conduct the activities above.[3]

Not authorized under GP 6 (IP required): (a) Permanent impacts for any single and complete project that are >1 acre in non-tidal waters of the U.S.; >½ acre in tidal waters; >1000 SF in saltmarsh, mud flats, riffle and pool complexes, or non-tidal vegetated shallows; or >100 SF in tidal vegetated shallows; (b) Temporary impacts in tidal waters that are >1 acre; >5000 SF in saltmarsh, mud flats, or riffle and pool complexes; or >1000 SF in vegetated shallows; (c) Stormwater treatment or detention systems, or subsurface sewage disposal systems in waters of the U.S.; or (d) New tide gates that do not meet SV criteria below.

Self-Verification Eligible	Pre-Construction Notification Required
1. In non-tidal waters, the combined permanent and temporary impacts are (a) ≤5,000 SF, and (b) not located in riffle and pool complexes and non-tidal vegetated shallows. 2. In tidal waters, the combined permanent and temporary impacts are (a) ≤5,000 SF, (b) ≤1,000 SF in mudflats and/or natural rocky habitat, and (c), not located in saltmarsh and tidal vegetated shallows. 3. Intake structures that are dry hydrants used exclusively for firefighting activities with no stream impoundments. 4. New tide gates on outfall structures for pipes conveying stormwater and/or industrial NPDES-permitted discharges from waters that are not waters of the U.S.	1. New outfall and/or intake structures. 2. Unconfined work or silt producing activities in streams with diadromous fish. 3. Submarine cables, conduits, or pipelines that occur in, over or under navigable waters of the U.S. 4. Stream channelization, relocation, impoundment, or loss of streambed occurs. 5. The activity is placed within and runs parallel to or along a streambed within waters of the U.S. 6. There is a permanent change in preconstruction contours in waters of the U.S. 7. Installation of utility lines or gas/oil pipelines using trench excavation where material is temporarily sidecast into waters of the U.S. for >3 months. Applicants must demonstrate how the material would not be dispersed by currents or other forces. 8. Activities that are not SV eligible and do not require an IP.

[1] See the definitions of a “utility line” and “oil or natural gas pipeline” in Section VII.
[2] Outfall structures must be in compliance with regulations issued under the National Pollutant Discharge Elimination System Program (Section 402 of the Clean Water Act).
[3] Temporary impacts shall comply with all GCs, including GC 32 Utility Line Installation and Removal.

GP 7. DREDGING (Authority: §10), DISPOSAL OF DREDGED MATERIAL (Authorities: §10, §404), BEACH NOURISHMENT (Authorities: §10 & §404), ROCK REMOVAL (Authority: §10) AND ROCK RELOCATION (Authorities: §10 & §404)

New, improvement and maintenance dredging (see notes below) including: (a) Disposal of dredged material at a confined aquatic disposal cell, beach nourishment location, near shore site, or ocean disposal site selected under Section 404 of the Clean Water Act pursuant to the 404(b)(1) Guidelines, provided the dredged material meets the requirements for such disposal; (b) Beach nourishment not associated with dredging; and (c) Rock removal and relocation for navigation.

Not authorized under GP 7 (IP required): (a) Dredging where ocean disposal is required for the disposal of dredged material (Section 103); New dredging >½ acre; ≥10,000 CY; >1000 SF permanent impacts to intertidal areas, saltmarsh, mud flats, riffle and pool complexes, or non-tidal vegetated shallows; or >100 SF permanent impacts to tidal vegetated shallows; (b) Maintenance or improvement dredging and/or disposal with >1 acre of impacts to intertidal areas, saltmarsh, mudflats, riffle and pool complexes, or non-tidal vegetated shallows; (c) New dredging where the primary purpose is sand mining for beach nourishment; (d) Beach scraping; (e) Boulder removal and relocation for navigation >½ acre; or (f) Blasting.

Self-Verification Eligible

1. Maintenance dredging of previously dredged areas, with upland disposal, that meet all of the following terms:
   a. Dredged area ≤1/2 acre; and
   b. Activities comply with GC 20, TOY Restrictions. The time-of-year restriction(s) stated in Appendix B of the MA Division of Marine Fisheries (DMF) Technical Report TR-47[1] can apply instead if the general TOY restriction if a TOY is provided for a specific waterbody and is less restrictive. This is to protect endangered species, EFH, and other species; and
   c. The dredge footprint is located >25' from salt marsh or >100' from vegetated shallows; and
   d. Combined permanent and temporary impacts that are (i) ≤1,000 SF in mudflats or natural rocky habitat, or (ii) ≤5,000 SF within intertidal habitat and areas containing shellfish (an area contains shellfish unless: it is verified that minimal shellfish are present per the local shellfish constable or a shellfish survey; or it is not mapped as a MassGIS shellfish suitability area).
   e. No return water from upland disposal areas.

2. Boulder relocation with ≤1,000 SF of impacts, relocated to a similar depth and substrate.

Pre-Construction Notification Required

1. Maintenance dredging where the primary purpose is sand mining for beach nourishment.

2. New dredging and associated disposal ≤1/2 acre or <10,000 cubic yards.

3. Improvement dredging.

4. Beach nourishment in waters of the U.S. not associated with dredging.

5. Activities that are located in saltmarsh and tidal vegetated shallows.

6. Dredging in a Federal Navigation Project or within the buffer zone (see GC 15).

7. Activities that are not eligible for SV and do not require an IP.

Notes:

1. See Section VII for definitions of improvement and maintenance dredging.
2. For PCN activities, the USACE may waive or adjust the time of year requirement on a case-by-case basis after consultation with resource agencies.
3. Disposal site of any dredged material must be identified prior to obtaining USACE authorization.
4. Contact the USACE if a ten-year authorization to maintain an area is desired.

[1] The MA DMF Technical Report TR-47: https://www.nae.usace.army.mil/Missions/Regulatory/State-General-Permits/Massachusetts-General-Permit/

GP 8. U.S. COAST GUARD APPROVED BRIDGES (Authorities: §404)

Discharges of dredged or fill material incidental to the construction and modification of bridges across navigable waters of the U.S., including cofferdams, abutments, foundation seals, piers, and temporary construction and access fills provided that the USCG authorizes the construction of the bridge structure under Section 9 of the Rivers and Harbors Act of 1899 or other applicable laws. A USCG Authorization Act Exemption or a Surface Transportation and Uniform Relocation Assistance Act (STURRA) (144h) exemption do not constitute USCG authorization.

Not authorized under GP 8 (IP Required): Causeways and approach fills (see GP 23).

Self-Verification Eligible	**Pre-Construction Notification Required**
1. Discharges of dredged or fill material that are incidental to the construction of bridges across navigable waters and meet all of the following: a. Combined permanent and temporary impacts that are ≤5,000 SF. b. Combined permanent and temporary impacts that are ≤1,000 SF in mudflats and natural rocky habitat. c. Not located in saltmarsh and tidal vegetated shallows.	1. Activities on USACE properties & USACE controlled easements.2. Installation of steel piles, including steel sheet piles, that cannot be done in the dry and where NOAA-ESA listed species are mapped as present. 3. Activities that are not eligible for SV and do not require an IP.

Notes:

1. GP 8 is not applicable to bridges over inland waters or wetlands that are not tidally influenced or regulated as navigable under Section 10.
2. See eligibility criteria for GPs 2 & 23 for projects that are not subject to USCG regulations.

GP 9. BANK AND SHORELINE STABILIZATION (Authorities: §10 & §404)

Bank stabilization activities necessary for erosion protection along the banks of lakes, ponds, streams, estuarine and ocean waters, and any other open waters. Includes bulkheads, seawalls, riprap, revetments, living seawalls, or slope protection & similar structures, specifically for the purpose of shoreline protection. This GP also authorizes temporary structures, fills, and work, including the use of temporary mats, necessary to conduct the activities above.

Activities must meet the following criteria: (a) No material is placed in excess of the minimum needed for erosion protection; (b) No material is of a type, or is placed in any location, or in any manner, that will impair surface water flow into or out of any waters of the U.S.; (c) No material is placed in a manner that will be eroded by normal or expected high flows (properly anchored native trees and treetops may be used in low energy areas); (d) Native plants appropriate for current site conditions, including salinity, must be used for bioengineering or vegetative bank stabilization; (e) The activity is not a stream channelization activity; and (f) The activity must be properly maintained, which may require repairing it after severe storms or erosion events. This GP authorizes those maintenance and repair activities if they require authorization. This GP also authorizes temporary structures, fills, and work, including the use of temporary mats, necessary to construct the bank stabilization activity. See GP 20 for living shoreline stabilization structures or fills.

Not authorized under GP 9 (IP required): (a) New bank stabilization >500 feet in total length (>1,000 linear feet in total length when necessary to protect transportation infrastructure) or permanent loss of saltmarsh >1,000 SF, unless the District Engineer waives this criterion by making a written determination concluding that the discharge of dredged or fill material will result in no more than minimal adverse environmental effects (an exception is for bulkheads – the district engineer cannot issue a waiver for a new bulkhead that is >1,000 feet in length along the bank); (b) Stream channelization or relocation activities; or (c) Breakwaters, groins or jetties.

Self-Verification Eligible

1. Activities in tidal and non-tidal waters that are:
   a. <200 feet in length.
   b. <400 feet in length when necessary to protect transportation infrastructure.
   c. ≤1 cubic yard of fill per linear foot average along the bank waterward of the plane of OHW or HTL.
   d. Not located in non-tidal wetlands, saltmarsh, vegetated shallows.

Pre-Construction Notification Required

1. Activities in tidal and non-tidal waters that are:
   a. ≥200 feet to ≤500 feet in total length. Activities >500 feet in total length must have a written waiver from USACE.
   b. ≥400 feet to ≤1,000 feet in total length when necessary to protect transportation infrastructure. Activities >1,000 feet in total length must have a written waiver from USACE.
   c. >1 cubic yard of fill per linear foot average along the bank waterward of the plane of OHW or HTL.
   d. Located in non-tidal wetlands, saltmarsh, vegetated shallows.
2. Activities with permanent loss of tidal or non-tidal waters that is (a) ≥5,000 SF or (b) ≥1,000 SF in mudflats and natural rocky habitat.
3. Activities that are (a) located in the Connecticut River or Merrimack River and/or (b) require installation of steel piles/steel sheet piles that cannot be done in the dry where NOAA ESA-listed species are mapped as present.
4. Activities on USACE properties & USACE-controlled easements.
5. Activities that require grouted riprap and/or poured/unformed concrete.
6. Activities that are not eligible for SV and do not require an IP.

Note: The applicant shall comply with GC 24. This includes utilization of bioengineering techniques in lieu of hard armoring to the maximum extent practicable as site conditions allow.

GP 10. AQUATIC HABITAT RESTORATION, ENHANCEMENT, AND ESTABLISHMENT ACTIVITIES (Authorities: §10 and §404)

Activities for the restoration, enhancement and establishment of non-tidal and tidal wetlands and riparian areas, including invasive, non-native or nuisance species control; the restoration and enhancement of non-tidal streams and other non-tidal open waters; the relocation of non-tidal waters, including non-tidal streams & associated wetlands for reestablishment of a natural stream morphology and reconnection of the floodplain; the restoration and enhancement of shellfish, finfish and wildlife; and the rehabilitation or enhancement of tidal streams, tidal wetlands and tidal open waters; provided those activities result in net increases in aquatic resource functions and services. See GP 9 for bank and shoreline stabilization. See GP 20 for living shorelines.

Not authorized under GP 10 (IP required): Stream channelization activities and artificial reefs.

Self-Verification Eligible	**Pre-Construction Notification Required**
1. In tidal and non-tidal waters excluding tidal vegetated shallows, the combined permanent and temporary impacts are ≤5,000 SF. 2. Eelgrass (vegetated shallows) planting and transplanting ≤100 SF in tidal waters.	1. In tidal and non-tidal waters excluding tidal vegetated shallows, the combined permanent and temporary impacts are >5,000 SF. 2. Eelgrass (vegetated shallows) planting and transplanting >100 SF in tidal waters. 3. Permanent water impoundments, dam removal, fish ladders, or tide gates. 4. Stream relocation, impoundment, or loss of streambed occurs. 5. Runneling projects with the purpose of restoring saltmarsh by removing excess water that ponds on the saltmarsh surface. 6. The conversion of: (a) a stream or natural wetlands to another aquatic habitat type (e.g., stream to wetland or vice versa, wetland to pond, etc.) or uplands, (b) one wetland type to another (e.g., forested wetland to an emergent wetland). 7. Activities in the Connecticut River from the Turners Falls Dam to the MA/CT border, or Merrimack River from the Essex Dam to the mouth, involving permanent or temporary impacts unless they are performed <5 feet waterward from OHW or HTL and in the dry. This is to protect endangered species. 8. Activities on USACE properties & USACE-controlled easements. 9. Activities that are not eligible for SV and do not require an IP.

Notes:

1. Changes in wetland plant communities that occur when wetland hydrology is more fully restored during wetland rehabilitation activities are not considered a conversion to another aquatic habitat type.
2. See RGL 18-01 for guidance on removal of obsolete dams and other structures from rivers and streams. https://www.usace.army.mil/missions/civil-works/regulatory-program-and-permits/guidance-letters/
3. An ecological reference site may be used for a design basis of the restoration activity. The reference site should possess characteristics of an intact aquatic habitat or riparian area that exists in the region. The reference site shall represent the target habitat type of the proposed activity. A reference site may be required at the discretion of USACE.

GP 11. FISH AND WILDLIFE HARVESTING AND ATTRACTION DEVICES AND ACTIVITIES (Authorities: §10 and §404)

Fish and wildlife harvesting and attraction devices and activities in waters of the U.S. such as pound nets, crab traps, crab and shellfish dredging, eel pots, lobster traps, duck blinds, clam and oyster digging, fish aggregating devices, and small fish attraction devices such as open-water fish concentrators (sea kites, etc.).

Not authorized under GP 11 (IP required): Artificial reefs; or new, or expansions of, impoundments and semi-impoundments of waters of the U.S. for the culture or holding of motile species such as lobster with an impounded area >½ acre.

Self-Verification Eligible	**Pre-Construction Notification Required**
1. In non-tidal waters, the combined permanent and temporary impacts are (a) ≤1/2 acre, and (b) not located in riffle and pool complexes and non-tidal vegetated shallows. 2. Fish and wildlife harvesting and attraction devices and activities that do not require a PCN or IP.	1. Pound nets, impoundments or semi-impoundments of waters of the U.S. for the culture or holding of motile species such as lobster with an impounded area ≤½ acre, fish aggregating devices, or small fish attraction devices. 2. Devices and activities that are located in tidal vegetated shallows, mud flats, or saltmarsh. 3. Devices and activities that do not require an IP.

Note: An SVN submittal to USACE is not required for work authorized under GP 11.

GP 12. RESPONSE OPERATIONS, OIL AND HAZARDOUS SUBSTANCES (Authorities: §10 & §404)

(a) Activities conducted in response to a discharge or release of oil and hazardous substances that are subject to the National Oil and Hazardous Substances Pollution Contingency Plan (40 CFR 300) including containment, cleanup, and mitigation efforts, provided that the activities are done under either: (i) The Spill Prevention, Control and Countermeasure Plan required by 40 CFR 112.3; (ii) The direction or oversight of the Federal on-scene coordinator designated by 40 CFR 300; or (iii) Any approved existing State, regional or local contingency plan provided that the Regional Response Team concurs with the proposed response efforts or does not object to the response effort; (b) Activities required for the cleanup of oil releases in waters of the U.S. from electrical equipment that are governed by EPA's polychlorinated biphenyl (PCB) spill response regulations at 40 CFR 761; (c) Booms placed in navigable waters of the U.S. for oil and hazardous substance containment, absorption and prevention; and (d) The use of structures and fills for spill response training exercises. Wetlands, vegetated shallows, mudflats, and riffle and pool complexes should be restored in place at the same elevation.

Self-Verification Eligible	**Pre-Construction Notification Required**
1. Activities are conducted in accordance with (a) or (b) above that are not planned or scheduled, but an emergency response (see Note 1). 2. Booms placed in navigable waters of the U.S. for oil and hazardous substance containment, absorption and prevention. 3. Temporary impacts for spill response training exercises ≤5000 SF in non-tidal waters and ≤1000 SF in tidal waters with no impacts to wetlands, saltmarsh, mudflats, or vegetated shallows. 4. Temporary structures in tidal waters with no impacts to wetlands, saltmarsh, mudflats, vegetated shallows, or riffle and pool complexes and in place ≤30 days.	1. Activities (a) or (b) above are planned or scheduled, not an emergency response; or 2. Activities that are not eligible for SV and do not require an IP.

Notes:

1. For emergency response activities in the Connecticut River from the Turners Falls Dam to the MA/CT border, Merrimack River from the Essex Dam to the mouth, and remaining tidal waters that are not rivers, the permittee must contact the USACE at (978) 318-8338 before or as soon as possible after the work authorized under GP 12(a) - (c) commences for the USACE to address effects under the Endangered Species Act.
2. An SVN submittal to USACE is not required for booms used for spill prevention, or properly contained and cleaned de minimus oil or hazardous substance discharges into navigable waters of the U.S.

GP 13. CLEANUP OF HAZARDOUS AND TOXIC WASTE (Authorities: §10 and §404)

Specific activities required to affect the containment, stabilization, or removal of hazardous or toxic waste materials, including court ordered remedial action plans or related settlements, which are performed, ordered or sponsored by a government agency with established legal or regulatory authority.

Not authorized under GP 13: (a) Establishment of new disposal sites; or (b) Expansion of existing sites used for the disposal of hazardous or toxic waste.

Self-Verification Eligible	Pre-Construction Notification Required
1. In non-tidal waters, the combined permanent and temporary impacts are (a) ≤5,000 SF, and (b) not located in vegetated shallows and riffle and pool complexes.	1. In non-tidal waters, the combined permanent and temporary impacts are (a) >5,000 SF, and (b) located in vegetated shallows and riffle and pool complexes. 2. Permanent and temporary impacts in tidal waters or navigable waters of the U.S. 3. Stream channelization, relocation, impoundment, or loss of streambed occurs. 4. Activities that are not eligible for SV and do not require an IP.

Notes:

1. Wetlands, vegetated shallows, mudflats, and riffle and pool complexes should be restored in place at the same elevation to the maximum extent practicable.
2. Activities undertaken entirely on a Comprehensive Environmental Response, Compensation, and Liability Act (CERCLA) site by authority of CERCLA, are not required to obtain permits under Section 404 of the CWA or Section 10 of the Rivers and Harbors Act.

GP 14. SCIENTIFIC MEASUREMENT DEVICES (Authorities: §10 and §404)

Scientific measurement devices for measuring and recording scientific data, such as staff gauges, tide and current gauges, meteorological stations, water recording and biological observation devices, water quality testing and improvement devices, and similar structures. Also eligible are small weirs and flumes constructed primarily to record water elevation, flow and/or velocity. Upon completion of the use of the device to measure and record scientific data, the measuring device and any other structures or fills associated with that device (e.g., foundations, anchors, buoys, lines, etc.) must be removed to the maximum extent practicable and the site restored to preconstruction elevations.

Not authorized under GP 14 (IP required): (a) Permanent impacts that are >5,000 SF in tidal and non-tidal waters of the U.S.; >1000 SF in tidal saltmarsh, mud flats, riffle and pool complexes; or >100 SF in tidal vegetated shallows; or (b) Temporary impacts in tidal waters that are >1 acre, unless the District Engineer waives this criterion by making a written determination concluding that the discharge of dredged or fill material will result in no more than minimal adverse environmental effects; >5000 SF in saltmarsh, mud flats, or riffle and pool complexes; or >1000 SF in vegetated shallows.

Self-Verification Eligible	**Pre-Construction Notification Required**
1. In non-tidal waters, the combined permanent and temporary impacts are (a) ≤5,000 SF, (b) not located in riffle and pool complexes and non-tidal vegetated shallows. 2. In tidal waters, the combined permanent and temporary impacts are (a) ≤5,000 SF, (b) ≤1,000 SF in mudflats and/or natural rocky habitat, (c) not located in saltmarsh and tidal vegetated shallows. 3. Temporary, non-biological sampling devices in waters that do not restrict or concentrate movement of aquatic organisms and will not adversely affect the course, condition, or capacity of a waterway for navigation. 4. Scientific measurement devices, and small weirs and flumes constructed primarily to record water quantity and velocity provided the discharge of fill is limited to 25 cubic yards. These cannot obstruct or restrict the waterway course, condition, capacity, and location. 5. Temporary measuring devices and associated structures (e.g., anchors, buoys, etc.) in tidal and non-tidal waters that do not require a PCN or IP.	1. Biological sampling devices, weirs or flumes, or the activity restricts or concentrates movement of aquatic organisms. 2. Permanent towers located in navigable waters that record and measure scientific data. 3. Devices that are not eligible for SV and do not require an IP.

Note: An SVN submittal to USACE is not required for temporary measuring devices with a footprint of <10 SF, with a profile of <3 feet high measured from the substrate and located in water deeper than -10 feet MLW.

GP 15. SURVEY ACTIVITIES (Authorities: §10 and §404)

Survey activities such as soil borings, core sampling, seismic exploratory operations, plugging of seismic shot holes and other exploratory-type bore holes, exploratory trenching, soil surveys, sampling, sample plots or transects for wetland delineations, and historic resources surveys.

Not authorized under GP 15 (IP required): (a) Permanent impacts that are >1 acre in tidal and non-tidal waters; >1000 SF in tidal saltmarsh, mud flats, or riffle and pool complexes; or >100 SF in tidal vegetated shallows; or (b) Temporary impacts in tidal waters that are >1 acre, unless the District Engineer waives this criterion by making a written determination concluding that the discharge of dredged or fill material will result in no more than minimal adverse environmental effects; >5000 SF in saltmarsh, mud flats, or riffle and pool complexes; or >1000 SF in vegetated shallows.

Self-Verification Eligible	**Pre-Construction Notification Required**
1. In non-tidal waters, the combined permanent and temporary impacts are (a) ≤5,000 SF, (b) not located in riffle and pool complexes and non-tidal vegetated shallows. 2. In tidal waters, the combined permanent and temporary impacts are (a) ≤5,000 SF, (b) ≤1,000 SF in mudflats and/or natural rocky habitat, (c) not located in saltmarsh and tidal vegetated shallows.	1. Exploratory trenching (see Note 2) occurs in waterways (e.g., streams, tidal waters). 2. Activities associated with the recovery of historic resources, and the drilling and discharge of excavated material from test wells for oil and gas exploration. 3. Seismic exploratory operations occur in tidal waters, the Connecticut River from the Turners Falls Dam to the MA/CT border, or the Merrimack River from the Essex Dam to the mouth. This is to protect endangered species. 4. Activities that are not eligible for SV and do not require an IP.

Notes:

1. An SVN submittal is not required for wetland delineations, and core sampling conducted for preliminary evaluation of dredge project analysis.
2. For the purposes of GP 15, the term “exploratory trenching” means mechanical land or underwater clearing of the upper soil profile to expose bedrock or substrate for the purpose of mapping or sampling the exposed material.
3. The discharge of drilling mud and cuttings may require a permit under §402 of the CWA.

GP 16. LAND AND WATER-BASED RENEWABLE ENERGY GENERATION FACILITIES (Authorities: §10 and §404), AND HYDROPOWER PROJECTS (Authority: §10 and §404)

Structures and work in tidal waters and discharges of dredged or fill material into tidal and non-tidal waters for the construction, expansion, modification or removal of: (a) Land-based renewable energy production facilities (e.g., solar, wind, biomass, geothermal) and their attendant features; (b) Water-based wind or hydrokinetic renewable energy generation projects and their attendant features; and (c) Discharges of dredged or fill material associated with hydropower projects. Attendant features may include, but are not limited to, land-based collection and distribution facilities, control facilities, and parking lots. For each single and complete project in (b) above, no more than 10 generation units (e.g., wind turbines or hydrokinetic devices) are authorized in navigable waters of the U.S. Upon completion of the pilot project (see note 2), the generation units, transmission lines, and other structures or fills associated with the pilot project must be removed to the maximum extent practicable.

Not authorized under GP 16 (IP required): (a) Permanent impacts that are >1 acre in non-tidal waters, >½ acre in tidal waters; >1000 SF in saltmarsh, mud flats, riffle and pool complexes, or non-tidal vegetated shallows; or >100 SF in vegetated shallows; or (b) Temporary impacts in tidal waters that are >1 acre; >5000 SF in saltmarsh, mud flats, or riffle and pool complexes; or >1000 SF in vegetated shallows.

Self-Verification Eligible	**Pre-Construction Notification Required**
In non-tidal waters, the combined permanent and temporary impacts for land-based activities are (a) ≤5,000 SF, (b) not located in riffle and pool complexes and non-tidal vegetated shallows.	1. In non-tidal waters, the combined permanent and temporary impacts for land-based activities are (a) >5000 SF, or (b) located in vegetated shallows or riffle and pool complexes. 2. Permanent and temporary impacts in tidal waters. 3. Water-based wind or hydrokinetic renewable energy generation projects, and hydropower projects. 4. For all activities eligible for authorization under GP 16: a. The activity occurs in tidal waters or in, over or under navigable waters. b. Stream channelization, relocation, impoundment, or loss of streambed occurs. 5. Activities that are not eligible for SV and do not require an IP.

Notes:

1. Utility lines constructed to transfer the energy from the land-based renewable generation or collection facility to a distribution system, regional grid, or other facility may be authorized by GP 6.
2. For the purposes of this GP, the term “pilot project” means an experimental project where the renewable energy generation units will be monitored to collect information on their performance and environmental effects at the project site.

GP 17. RESIDENTIAL, COMMERCIAL AND INSTITUTIONAL DEVELOPMENTS AND RECREATIONAL FACILITIES (AUTHORITIES: §404)

Discharges of dredged or fill material into non-tidal waters for the construction or expansion of: (a) Residences and residential subdivisions; (b) Residential, commercial and institutional building foundations and building pads; and (c) Recreational facilities such as playgrounds, playing fields, bikeways, trails, etc. This GP also authorizes attendant features that include, but are not limited to, roads, parking lots, garages, yards, and utility lines, and stormwater management facilities. This GP authorizes attendant features if they are necessary for the use of the project purpose.

Not authorized under GP 17 (IP required): (a) Permanent impacts that result in loss of non-tidal waters >1/2 acre; >1000 SF in riffle and pool complexes or vegetated shallows; or (b) Subsurface sewerage disposal systems in non-tidal waters.

Self-Verification Eligible	**Pre-Construction Notification Required**
1. In non-tidal waters, the combined permanent and temporary impacts are (a) <5,000 SF, and (b) not located in riffle and pool complexes and non-tidal vegetated shallows. 2. Stream channelization or relocation resulting in loss of streambed that is <200 LF.	1. In non-tidal waters, the combined permanent and temporary impacts are (a) ≥5,000 SF, or (b) located in riffle and pool complexes or non-tidal vegetated shallows. 2. Stream and wetland crossings that require a PCN per GCs 20 TOY Restrictions and GC 31 Stream Work and Crossings & Wetland Crossings. 3. Stream channelization or relocation resulting in loss of streambed that is ≥200 LF. Stream impoundment activities of any kind. 4. Activities on USACE properties & USACE-controlled easements. 5. Activities that are not SV eligible and do not require an IP.

Notes:

1. Stream and wetland crossings (permanent and temporary), including those built with construction mats; and modifications (including sliplining), replacements or extensions to existing crossings.
2. See GC 22 for information on temporary construction mats.
3. Subdivisions: For residential subdivisions, the aggregate total loss of waters of United States authorized by this GP cannot exceed 1/2-acre. This includes any loss of waters of the United States associated with development of individual subdivision lots.

GP 18. AQUACULTURE (Authorities: §10 and §404)

(a) The installation of buoys, floats, racks, trays, nets, lines, tubes, containers, and other structures into navigable waters of the U.S.; (b) Discharges of dredged or fill material into tidal and non-tidal waters necessary for shellfish seeding, rearing, cultivating, transplanting, and harvesting activities; and (c) Shellfish seeding or brushing the flats projects. Any fill material imported to the project from offsite (this is limited to mineral growth medium used in culture trays) shall be clean and of comparable grain size to the native substrate. Activities authorized under this GP must have (a) their MA DMF Aquaculture Certificate letter for licensed shellfish aquaculture sites, (b) documentation that the applicant has coordinated with the U.S. Coast Guard regarding USCG Private Aids to Navigation standards, (c) their MEPA Certificate (if required), and (d) documentation that the applicant has contacted their local authorities (ex. harbormaster, select board, shellfish constable) for authorization of their facility.

Not authorized under GP 18 (IP required): (a) New, or expansions of, impoundments and semi-impoundments of tidal and non-tidal waters for the culture or holding of motile species such as lobster with an impounded area >½ acre; (b) Cultivation of a nonindigenous species (see Note 1) unless that species has been previously cultivated in the waterbody; (c) Cultivation of an aquatic nuisance species (see Note 1); (d) Attendant features such as docks, piers, boat ramps (see GP 4); (e) stockpiles, staging areas, or the deposition of shell material back into tidal and non-tidal waters as waste.

Self-Verification Eligible

1. In tidal waters, a new lease site area is (a) ≤2-acre, (b) not located in salt marsh, natural rocky habitat, or tidal vegetated shallows.

2. In tidal waters, *expansions* of existing lease sites not to exceed 2 acres for the entire site (e.g. 1 acre lease site increasing to a 2 acre lease site may qualify as SV). A PCN is required for expansions in salt marsh, natural rocky habitat, and tidal vegetated shallows.

3. Cages, racks that are elevated ≥2 feet above the ocean floor with legs within a lease site with ≤4 buoys marking the corners.

4. Floating cage strings with a single connecting line, ≤2 anchors and ≤2 end marker buoys per string within a lease site with ≤4 buoys marking the corners.

5. No activities located within 25 feet of tidal vegetated shallows.

6. Culture only indigenous species.

7. Not located in FNP or within a distance of three times the authorized depth of an FNP (see GC 15).

8. Not located in or impinge upon the value of any National Lands or Federal Properties.

9. Floating upweller docks that total ≤600 SF in area.

Pre-Construction Notification Required

1. Discharges of fill material associated with aquaculture >5,000 SF.

2. Research, educational, commercial-viability or experimental aquaculture gear activities >1,000 SF.

3. Kelp or finfish aquaculture.

4. Land-based hatchery intakes >3 inches in diameter.

5. Activities in water depths >10 feet mean low lower water (MLLW).

6. Activities with in-water lines, ropes or chains that are not SV eligible (see #3-4).

7. Activities occur in the Connecticut River from the Turners Falls Dam to the MA/CT border or the Merrimack River from the Essex Dam to the mouth. This is to protect endangered species.

8. New, or expansions of, impoundments and semi-impoundments for the culture or holding of motile species such as lobster with an impounded area ≤1/2 acre.

9. Activities that do not require an IP. Activities that do not require a PCN or an IP may be SV eligible.

Note: The Nonindigenous Aquatic Nuisance Prevention and Control Act of 1990 defines: (a) nonindigenous species as “any species or other viable biological material that enters an ecosystem beyond its historic range, including any such organism transferred from one country into another”; and (b) aquatic nuisance species as “a nonindigenous species that threatens the diversity or abundance of native species or the ecological stability of infested waters, or commercial, agricultural, aquacultural, or recreational activities dependent on such waters.”

GP 19. MINING ACTIVITIES (Authorities: §10 and §404)

Discharges of dredged or fill material into non-tidal waters for mining activities, except for coal mining and metallic mineral mining activities.

Not authorized under GP 19 (IP required): (a) Permanent impacts >1 acre in non-tidal waters; or (b) Activities in tidal waters.

Self-Verification Eligible	Pre-Construction Notification Required
In non-tidal waters, the combined permanent and temporary impacts are (a) ≤5,000 SF, and (b) not located in riffle and pool complexes, non-tidal vegetated shallows, and streams.	1. In non-tidal waters, the combined permanent and temporary impacts are (a) >5,000 SF, or (b) located in riffle and pool complexes, non-tidal vegetated shallows, and streams. 2. The activity occurs in non-tidal navigable waters of the U.S. 3. Stream channelization, relocation, impoundment, loss of streambed, or discharge of tailings into streams occurs. 4. Work on USACE properties & USACE-controlled easements. 5. Activities that are not eligible for SV and do not require an IP.

GP 20. LIVING SHORELINES[1] (Authorities: §10 and §404)

Construction and maintenance of living shorelines to stabilize banks and shores in tidal waters. In non-tidal waters that are not subject to the ebb and flow of the tide, nature-based bank stabilization techniques such as bioengineering and vegetative stabilization may be authorized by GP 9. This GP authorizes those maintenance and repair activities in-kind that are necessary to address changing environmental conditions.

The following terms must be met for both SVs and PCNs as applicable: (a) Coir logs, coir mats, stone, native oyster shell, native wood debris, and other structural materials must be adequately anchored, of sufficient weight, or installed in a manner that prevents relocation in most wave action or water flow conditions, except for extremely severe storms; (b) For living shorelines consisting of tidal fringe wetlands, native plants appropriate for current site conditions, including salinity and elevation, must be used if the site is planted by the permittee; (c) Discharges of dredged or fill material into waters of the U.S., and oyster or mussel reef structures in navigable waters, must be the minimum necessary for the establishment and maintenance of the living shoreline; (d) If sills or other structural materials per PCN #4 must be constructed to protect fringe wetlands for the living shoreline, those structures must be the minimum size necessary to protect those fringe wetlands; (e) The activity must be designed, constructed, and maintained so that it has no more than minimal adverse effects on water and sediment movement between the waterbody and the shore and the movement of aquatic organisms between the waterbody and the shore; and (f) The living shoreline must be properly maintained and monitored, which may require periodic repair of sills, bioengineered components, or replacing sand fills after severe storms or erosion events. Vegetation may be replanted to maintain the living shoreline.

Not authorized under GP 20 (IP required): (a) The activity is ≥1000 feet in length along the bank (≥2000 LF both banks) unless waived by the District Engineer; or (b) The activity is >30 feet channel ward of mean low water in tidal waters; or (c) Upland reclamation activities; or (d) Stream channelization or relocation activities; or (e) Breakwaters, groins, jetties, or artificial reefs; or (f) Permanent impacts >1,000 SF in existing saltmarsh; >100 SF in existing tidal vegetated shallows.

Self-Verification Eligible	**Pre-Construction Notification Required**
1. Tidal and non-tidal living shorelines ≤100 LF for each bank (≤200 LF for both banks). 2. Combined permanent and temporary impacts ≤5,000 SF in tidal waters, excluding existing salt marsh, tidal vegetated shallows, natural rocky habitat, and mudflats.	1. Tidal and non-tidal living shorelines >100 LF to <1000 LF (>200 LF to <2000 LF for both banks). 2. Permanent and temporary impacts in existing salt marsh, tidal vegetated shallows, or mudflats. 3. Work on USACE properties & USACE-controlled easements. 4. Use of stone sills, native oyster shell, native wood debris, or other structural materials.

Notes:

1. PCNs require monitoring for a minimum of 5 years in accordance with an approved restoration plan, unless otherwise determined by the USACE. The first year of monitoring will be the first year that the site has been through a full growing period after completion of construction and planting.
2. Applicants are encouraged to obtain a MEPA certificate prior to submitting a USACE permit application.

[1] A living shoreline has a footprint that is made up mostly of native material. It incorporates vegetation or other living, natural "soft" elements alone or in combination with some type of harder shoreline structure (e.g., oyster or mussel reefs or rock sills) for added protection and stability. Living shorelines should maintain the natural continuity of the land-water interface and retain or enhance shoreline ecological processes. Living shorelines must have a substantial biological component, either tidal or lacustrine fringe wetlands or oyster or mussel reef structures.

GP 21. AGRICULTURAL ACTIVITIES (Authority: §404)

Discharges of dredged or fill material in non-tidal waters for agricultural activities, including the construction of building pads for farm buildings. Authorized activities include: (a) installation, placement, or construction of drainage tiles, ditches, or levees; mechanized land clearing; land leveling; the relocation of existing serviceable drainage ditches; and similar activities; (b) construction of farm ponds, excluding perennial streams, provided the farm pond is used solely for agricultural purposes; and (c) discharges of dredged or fill material to relocate existing serviceable drainage ditches constructed in non-tidal streams.

Not authorized under GP 21 (IP required): (a) Permanent impacts that are >1 acre in non-tidal waters; or >1000 SF in riffle and pool complexes, or non-tidal vegetated shallows; (b) Work in tidal waters; or (c) Construction of farm ponds in perennial streams.

Self-Verification Eligible	**Pre-Construction Notification Required**
In non-tidal waters, the combined permanent and temporary impacts are (a) ≤5,000 SF, and (b) not located in riffle and pool complexes and non-tidal vegetated shallows.	1. In non-tidal waters, the combined permanent and temporary impacts are (a) >5,000 SF, or (b) located in riffle and pool complexes and non-tidal vegetated shallows. 2. Activities occur in non-tidal navigable waters of the U.S. 3. Stream channelization, relocation, impoundment, loss of streambed, or farm ponds in non-perennial streams occurs. 4. Activities that are not eligible for SV and do not require an IP.

Note: Some discharges for agricultural activities may qualify for an exemption under Section 404(f) of the CWA (see 33 CFR 323.4). This GP authorizes the construction of farm ponds that do not qualify for the CWA §404(f)(1)(C) exemption because of the recapture provision at §404(f)(2).

GP 22. RESHAPING EXISTING DRAINAGE DITCHES, CONSTRUCTION OF NEW DITCHES, AND MOSQUITO MANAGEMENT (Authorities: §10 and §404)

Discharges to modify the cross-sectional configuration of currently serviceable drainage ditches constructed in tidal and non-tidal waters, for the purpose of improving water quality by regrading the drainage ditch with gentler slopes, which can reduce erosion, increase growth of vegetation, and increase uptake of nutrients and other substances by vegetation. Also authorized are mosquito reduction activities.

Not authorized under GP 22 (IP required): Stream channelization, relocation, impoundments, or loss of streambed.

Self-Verification Eligible	**Pre-Construction Notification Required**
≤500 linear feet of drainage ditch will be reshaped provided excavated material is deposited in an upland area.	1. >500 linear feet of drainage ditch will be reshaped, excavated material is deposited in a water of the U.S., or the reshaping of the ditch increases the drainage capacity beyond the original as-built capacity or expands the area drained by the ditch as originally constructed (i.e., the capacity of the ditch is not the same as originally constructed or drains additional wetlands or other waters of the U.S.). 2. Permanent and temporary impacts in tidal vegetated shallows. 3. New ditches or relocation of drainage ditches constructed in waters of the U.S. (i.e., the location of the centerline of the reshaped drainage ditch is not approximately the same as the location of the centerline of the original drainage ditch). 4. Activities that are not eligible for SV and do not require an IP.

Note: Some ditch activities are exempt under Section 404(f) of the CWA (see 33 CFR 323.4).

GP 23. LINEAR TRANSPORTATION PROJECTS AND WETLAND/STREAM CROSSINGS (Authorities: §10 & §404)

Activities[1] required for the construction, expansion, modification, or improvement of linear transportation projects (e.g., driveways, roads, highways, railways, trails, airport runways, and taxiways) and attendant features. This GP also authorizes temporary structures, fills, and work, including the use of temporary mats (see Note 1), necessary to construct the linear transportation project.

Not authorized under GP 23 (IP required): (a) Permanent impacts for any single and complete project that are >1 acre in non-tidal waters; >½ acre in tidal waters; >1000 SF in saltmarsh, mud flats, riffle and pool complexes, or non-tidal vegetated shallows; or >100 SF in tidal vegetated shallows; (b) Temporary impacts in tidal waters that are >1 acre; >5000 SF in saltmarsh, mud flats, or riffle and pool complexes; or >1000 SF in vegetated shallows; (c) Non-linear features commonly associated with transportation projects, such as vehicle maintenance or storage buildings, parking lots, train stations, or aircraft hangars (see GP 17); or (d) New tide gates.

Self-Verification Eligible

1. In non-tidal waters, the combined permanent and temporary impacts are a) ≤5,000 SF; b) not located in riffle and pool complexes and non-tidal vegetated shallows; and c) meet the Massachusetts River and Stream Crossing Standards

2. Existing crossings (e.g., culverts, elliptical or arch pipes, etc.) are not modified by (a) decreasing the diameter of the crossing or (b) changing the friction coefficient, such as through slip lining (retrofitting an existing culvert by inserting a smaller diameter pipe), culvert relining or invert lining.

3. Stream channelization or relocation resulting in loss of streambed that is <200 LF.

Pre-Construction Notification Required

1. In non-tidal waters, the combined permanent and temporary impacts are a) >5,000 SF; b) located in vegetated shallows or riffle and pool complexes; or c) do not meet the Massachusetts River and Stream Crossing Standards (see note 4).

2. The activity occurs in tidal waters, salt marsh, or in, over or under navigable waters of the U.S.

3. Stream and wetland crossings that require a PCN per GC 20 TOY Restrictions and GC 31 Stream Work and Crossings & Wetland Crossings.

4. Stream channelization or relocation resulting in loss of streambed that is ≥200 LF. Stream impoundment activities of any kind.

5. Work on USACE properties & USACE-controlled easements.

6. Activities that are not eligible for SV and do not require an IP.

Notes:

1. See GC 22 for information on temporary construction mats.
2. Discharges of dredged or fill material incidental to the construction of bridges across navigable waters of the U.S. may be authorized under GP 8.
3. Loss of streambed does not require a PCN when bridge piers or similar supports are used.
4. In their PCN application submission to the USACE, applicants must explain why they are unable to meet the Massachusetts River and Stream Crossing Standards.
5. For tidal crossings, modeling is encouraged as a method to verify the proposed crossing would not be undersized and resilient to the effects of sea level rise.

[1] Stream crossings must conform with the MA Stream Crossing Guidelines when practicable and comply with all applicable GCs of this document (Section IV).

GP 24. TEMPORARY CONSTRUCTION, ACCESS, AND DEWATERING (Authorities: §10 and §404)

Temporary structures, work, and discharges, including cofferdams, necessary for construction activities or access fills or dewatering of construction sites that are not authorized under another GP activity.

Not authorized under GP 24 (IP required): (a) Permanent structures or impacts; (b) Temporary impacts in tidal waters that are >1 acre; >5000 SF in saltmarsh, mud flats, or riffle and pool complexes; or >1000 SF in vegetated shallows; (c) Use of cofferdams to dewater wetlands or other aquatic areas to change their use; (d) Temporary stream crossings (see GPs 6, 17, 23); (e) Structures or fill left in place after construction is completed.

Self-Verification Eligible	**Pre-Construction Notification Required**
1. In non-tidal waters, temporary impacts are a) ≤5,000 SF; b) not located in riffle and pool complexes and non-tidal vegetated shallows. 2. In tidal waters, temporary impacts are a) ≤5,000 SF, b) ≤1,000 SF in mudflats and/or natural rocky habitat, and c) not located in saltmarsh and tidal vegetated shallows. 3. Structures in navigable waters of the U.S. provided impacts do not require a PCN and they are left in place ≤30 days.	1. In non-tidal waters, temporary impacts are a) >5,000 SF; b) located in riffle and pool complexes or non-tidal vegetated shallows. 2. In tidal waters, temporary impacts are a) >5,000 SF; b) >1,000 SF in mudflats and/or natural rocky habitat, or (c) located in saltmarsh and tidal vegetated shallows. 3. Activities in the Connecticut River from the Turners Falls Dam to the MA/CT border, or Merrimack River from the Essex Dam to the mouth, involving temporary impacts unless they are performed <5 feet waterward from OHW or HTL and in the dry. This is to protect endangered species; or 4. Activities not eligible for SV and do not require an IP.

Notes:

1. Turbidity or sediment resuspension is generally not considered to occur when properly using management techniques to work in dry conditions. See GC 25.
2. Total impact areas under SV Eligible 1-2 exclude use of temporary construction mats. See GC 22 for information on temporary construction mats.
3. An SVN submittal to USACE is not required for SV #3 above.

GP 25. EMERGENCY SITUATIONS (Authorities: §10 and §404)

Structures or work in or affecting navigable waters of the U.S. and the discharge of dredged or fill material into waters of the U.S., including wetlands, necessary for repair or protection measures associated with an emergency situation[1], MassDEP Emergency Declaration/Certification, or FEMA Declared Disaster. The activity shall be the minimum necessary to alleviate the immediate emergency unless that additional work would result in no more than minimal effects to aquatic environment and is necessary to reduce the potential for future failure or loss of the structure or site. Typical activities authorized under this GP include, but are not limited to, restoration of damaged areas; bank stabilization; temporary fills for staging, access, and dewatering; and, repair, replacement, or rehabilitation of existing structures and/or fills (i.e., roads, bridges, utility pipelines and flood control structures, including attendant features, and other existing structures located in waters of the U.S.).

For the restoration of areas damaged by storms floods, or other discrete events: (a) The restored area must not extend waterward of the ordinary high-water mark or high tide line that existed prior to the damage. (b) The slope of the restored area below the ordinary high-water mark or high tide line must not exceed the slope that existed prior to the damage. (c) The bottom elevation of the restored area must not exceed the bottom elevation that existed prior to the damage (i.e., the restored area must not result in a reduction in the depth of the waterbody that existed prior to the damage). (d) Except in cases of FEMA reimbursement, the activity must be initiated, under contract to commence, or funds shall be allocated for the activity within 30 days of authorization under GP 25.

Not authorized under GP 25 (IP required): (a) Permanent impacts for a single and complete project >1/2 acre in tidal waters, unless the district engineer waives this criterion by making a written determination concluding that the activity will result in no more than minimal adverse environmental effects; >1,000 SF in saltmarsh, mud flats, riffle and pool complexes, or non-tidal vegetated shallows; or >100 SF in tidal vegetated shallows; (b) Temporary impacts in tidal waters that are >5,000 SF in saltmarsh, mud flats, or riffle and pool complexes; or >1,000 SF in vegetated shallows; (c) New structures or fills that did not previously exist before the storm event or other discrete event (see other GPs).

Self-Verification Eligible	**Pre-Construction Notification Required**
1. Activities that qualify under a Severe Weather Emergency Declaration pursuant to 310 CMR 10.06(8) and/or receive an Emergency Certification pursuant to 310 CMR 10.06 and/or meet the requirements of 314 CMR 9.12(2) or (3); and 2. Activities eligible under a FEMA Declared Disaster that also comply with #1 above.	1. Activities that are eligible under a FEMA Declared Disaster and do not qualify under SV #1. 2. Minor deviations in the structure or fill area, including those to existing structures or fills are authorized due to changes in materials, construction techniques, requirements of other regulatory agencies, or current construction codes or safety standards that are necessary to alleviate the emergency. 3. Activities that are not eligible for SV and do not require an IP.

Notes:

1. Review the GCs (Section IV) to confirm if a PCN is not required elsewhere in this document.
2. If the activity is not a MassDEP Emergency Declaration/Certification, does not meet the requirements of 314 CMR 9.12(2) or (3), or is not a FEMA Declared Disaster, applicants must explain in writing why their activity qualifies as an emergency (see footnote) to be eligible under GP 25.
3. SV eligible activities qualify under the general 401 WQC MassDEP issued for the 2023 MA GPs (GC 9).

[1] An emergency, as determined by this office and 33 CFR 325.2(e)(4), is one which would result in an unacceptable hazard to life, a significant loss of property, or an immediate, unforeseen, and significant economic hardship if corrective action requiring a Department of the Army permit is not undertaken within a time period less than the normal time to process the request under standard processing procedures.

SECTION IV. GENERAL CONDITIONS:

To qualify for GP authorization, the applicant must comply with the following general conditions, as applicable, in addition to authorization-specific conditions imposed by the division or district engineer.

1. Other Permits
2. Federal Jurisdictional Boundaries
3. Single and Complete Projects
4. Use of Multiple General Permits
5. Suitable Material
6. Tribal Rights & Burial Sites
7. Avoidance, Minimization, and Compensatory Mitigation
8. Water Quality & Stormwater Management
9. Coastal Zone Management
10. Federal Threatened and Endangered Species
11. Essential Fish Habitat
12. National Lands
13. Wild and Scenic Rivers
14. Historic Properties
15. USACE Property and Federal Projects (§408)
16. Navigation
17. Permit/Authorization Letter On-Site
18. Storage of Seasonal Structures
19. Pile Driving and Pile Removal in Navigable Waters
20. Time of Year Restrictions
21. Heavy Equipment in Wetlands
22. Temporary Fill & Construction Mats
23. Restoration of Wetland Areas
24. Bank Stabilization
25. Soil Erosion and Sediment Controls
26. Aquatic Life Movements and Management of Water Flows
27. Spawning, Breeding, and Migratory Areas
28. Vernal Pools
29. Invasive Species
30. Fills Within 100-Year Floodplains
31. Stream Work and Crossings & Wetland Crossings
32. Utility Line Installation and Removal
33. Water Supply Intakes
34. Coral Reefs
35. Blasting
36. Inspections
37. Maintenance
38. Property Rights
39. Transfer of GP Verifications
40. Modification, Suspension, and Revocation
41. Special Conditions
42. False or Incomplete Information
43. Abandonment
44. Enforcement Cases
45. Previously Authorized Activities
46. Duration of Authorization

1. Other Permits. Authorization under these GPs does not obviate the need for the permittee to obtain other Federal, State, or local permits, approvals, or authorizations required by law. Permittees are responsible for obtaining all required permits, approvals, or authorizations. Activities that are not regulated by the State, but subject to USACE jurisdiction, may still be eligible for these GPs.

2. Federal Jurisdictional Boundaries.
a. Applicability of these GPs shall be evaluated with reference to Federal jurisdictional boundaries. Activities shall be evaluated with reference to "waters of the U.S." under the CWA (33 CFR 328) and "navigable waters of the U.S." under §10 of the Rivers and Harbors Act of 1899 (33 CFR 329). Permittees are responsible for ensuring that the boundaries used satisfy the Federal criteria defined at 33 CFR 328-329. These sections prescribe the policy, practice, and procedures to be used in determining the extent of the USACE jurisdiction. Note: Waters of the U.S. includes all waters pursuant to 33 CFR 328.3(a), and adjacent wetlands as the term is defined in 33 CFR 328.3(c).
b. Wetlands shall be delineated in accordance with the USACE Wetlands Delineation Manual and the most recent Northcentral/Northeast Regional Supplement. Wetland delineation and jurisdiction information is located at: www.nae.usace.army.mil/missions/regulatory/jurisdiction-and-wetlands and maps are located at www.nae.usace.army.mil/missions/regulatory/state-general-permits/massachusetts-general-permit.
c. Vegetated shallows shall be delineated when present on the project site. Vegetated shallow survey guidance and maps are located at: www.nae.usace.army.mil/missions/regulatory/state-general-permits/massachusetts-general-permit.
d. Natural rocky habitats shall be delineated when present on the project site. The definition of natural rocky habitats is in Section VII of the MA GP. Natural rocky habitat survey guidance and maps are located at: www.nae.usace.army.mil/ missions/regulatory/state-general-permits/massachusetts-general-permit.

3. Single and Complete Projects. The MA GP shall not be used for piecemeal work and shall be applied to single and complete projects. The term "single and complete project" is defined at 33 CFR 330.2(i) as the total project proposed or accomplished by one owner/developer or partnership or other association of owners/developers.
a. For non-linear projects, a single and complete project must have independent utility. Portions of a multi-phase project that depend upon other phases of the project do not have independent utility. Phases of a project that would be constructed, even if the other phases were not built, can be considered as separate single and complete projects with independent utility.
b. Unless USACE determines the activity has independent utility, all components of a single project and/or all planned phases of a multi-phased project (e.g., subdivisions should include all work such as roads, utilities, and lot development) shall be evaluated as one single and complete project.
c. For linear projects such as power lines or pipelines with multiple crossings, a "single and complete project" is all crossings of a single water of the U.S. (i.e., single waterbody) at a specific location. For linear projects crossing a single waterbody several times at separate and distant locations, each crossing is considered a single and complete project. However, individual channels in a braided stream or river, or individual arms of a large, irregularly shaped wetland or lake, etc., are not separate waterbodies, and crossings of such features cannot be considered separately. If any crossing requires a PCN review or an individual permit review, then the entire linear project shall be reviewed as one project under PCN or the individual permit procedures.

4. Use of Multiple General Permits. The use of more than one GP for a single and complete project is prohibited, except when the acreage loss of waters of the U.S. authorized by the GPs does not exceed the acreage limit of the GPs with the highest specified acreage limit. For example, if a road crossing over waters is constructed under GP 23, with an associated utility line

crossing authorized by GP 6, if the maximum acreage loss of waters of the U.S. for the total project is ≥1 acre it shall be evaluated as an IP.

5. Suitable Material & Discharge of Pollutants. No activity may use unsuitable material (e.g., trash, debris, car bodies, asphalt, etc.). All activities involving any discharge into waters of the U.S. authorized under these GPs shall be consistent with applicable water quality standards, effluent limitations, standards of performance, prohibitions, and pretreatment standards and management practices established pursuant to the CWA (33 U.S.C. 1251), and applicable state and local laws. If applicable water quality standards, limitations, etc., are revised or modified during the term of this GP, the authorized work shall be modified to conform with these standards within six months from the effective date of such revision or modification, or within a longer period of time deemed reasonable by the District Engineer in consultation with the Regional Administrator of the EPA. Unless monitoring data indicates otherwise, applicants may presume that their activity complies with state water quality standards provided they are in compliance with the Section 401 WQC (Applicable only to the Section 404 activity).

6. Tribal Rights & Burial Sites

a. For all SV and PCN applications, prospective permittees shall follow the guidance set forth in Appendix A, Guidance for NHPA Section 106 Compliance in Massachusetts.

b. No activity or its operation may impair reserved tribal rights, including, but not limited to, reserved water rights and treaty fishing and hunting rights.

c. Many tribal resources are not listed on the National Register of Historic Places (NRHP) and may require identification and evaluation in collaboration with the identifying tribe and by qualified professionals. The Tribal Historic Preservation Officer (THPO) and State Historic Preservation Officer (SHPO) may be able to assist with locating information on:

i. Previously identified tribal resources; and
ii. Areas with potential for the presence of tribal resources.

d. Discovery of Previously Unknown Remains and Artifacts: If any previously unidentified human remains, cultural deposits, or artifacts are discovered while accomplishing the activity authorized by this permit, you must immediately notify the USACE of what you have found, and to the maximum extent practicable, cease work and avoid construction activities that may affect the remains and artifacts until the required coordination has been completed. The USACE will initiate the appropriate the Federal, Tribal, and state coordination required to determine if the items or remains are eligible for listing in the NRHP and warrant a recovery effort or can be avoided.

e. Burial Sites: Burial sites, marked or unmarked, are subject to state law (Massachusetts Unmarked Burial Law). Native American burial sites on federal or tribal land are subject to the provisions of Native American Graves Protection and Repatriation Act (NAGPRA). Regulated activities may not result in disturbance or removal of human remains until disposition of the remains has been determined by the appropriate authority under these laws, and the work is authorized by the USACE. Regulated activities which result in an inadvertent discovery of human remains must stop immediately, and the USACE, as well as the appropriate state and tribal authority, must be notified. Regulated work at inadvertent discovery sites requires compliance with state law or NAGPRA, as appropriate, prior to re-starting work.

7. Avoidance, Minimization, and Compensatory Mitigation. To qualify under the MA GP, activities must comply with Section V Mitigation Standards and the following as applicable:

a. Avoid and Minimize: Activities must be designed and constructed to avoid and minimize adverse effects, both temporary and permanent, to waters of the U.S. to the maximum extent practicable at the project site. Avoidance and minimization are required to the extent necessary to ensure that the adverse effects to the aquatic environment (both area and function) are no more than minimal.

b. Compensatory mitigation for unavoidable impacts to waters of the U.S., including direct, indirect, secondary, and temporal loss, will generally be required for permanent impacts that exceed the thresholds identified in Section V, and may be required for temporary impacts, to offset unavoidable impacts which remain after all appropriate and practicable avoidance and minimization has been achieved and to ensure that the adverse effects to the aquatic environment are no more than minimal. Proactive restoration projects or temporary impact work with no secondary effects may generally be excluded from this requirement.
c. Mitigation proposals shall follow the guidelines found in the Compensatory Mitigation for Losses of Aquatic Resources; Final Rule April 10, 2008; 33 CFR 332. Prospective permittees may purchase mitigation credits in-lieu of permittee-responsible mitigation as compensation for unavoidable impacts to waters of the U.S. in the Commonwealth of Massachusetts.

8. Water Quality & Stormwater Management. The 401 WQC requirement applies to all activities listed under GPs 1-25, unless determined otherwise by MassDEP. Permittees shall also satisfy stormwater management requirements in Massachusetts.

a. General 401 WQC: MassDEP issued a WQC on April 21, 2023 which conditionally certifies all activities in GPs 1 – 24 eligible for SV and PCN so long as the activity is described in 314 CMR 9.03, and is not an activity described in 314 CMR 9.04, and so long as the activity meets all other requirements, terms and conditions of the WQC. The MassDEP WQC also conditionally certifies activities described in GP 25 so long as the activity meets all other conditions of the WQC. Emergency projects described in GP 25 must obtain an emergency certification or otherwise be authorized pursuant to 310 CMR 10.06, qualify under a Severe Weather Emergency Declaration pursuant to 310 CMR 10.06(8) issued by the MassDEP, or meet the requirements of 9.12(2) or (3) in order to be certified under the WQC. Prospective permittees may refer to the following link to determine if their activity is eligible: https://www.nae.usace.army.mil/Missions/Regulatory/State-General-Permits/ Massachusetts-General-Permit/. The General 401 WQC is located here, and it provides detailed information regarding what activities are certified and the conditions for certification. Activities listed in 314 CMR 9.03 that are not exempt from the Wetland Protection Act must have a valid Final Order of Conditions (OOC) or Final Restoration Order of Conditions pursuant to 310 CMR 10.00 to be eligible under the General 401 WQC.
b. Individual 401 WQC: Prospective permittees shall contact MassDEP and apply for an individual 401 WQC if their activity does not qualify for a General 401 WQC as outlined above. MassDEP may issue, waive, or deny the individual 401 WQC on a case-by-case basis. All activities listed in 314 CMR 9.04 must obtain an individual 401 WQC from MassDEP to be eligible under these GPs. When an Individual 401 WQC is required for *PCN activities*, the prospective permittee shall submit their Individual 401 WQC application concurrently to MassDEP and USACE to comply with 40 CFR 121.
c. The prospective permittee is responsible for determining the appropriate 401 WQC requirement and submitting this information to the USACE at the time of their PCN application or when completing their SVN. Prospective permittees that are unsure of whether their activity has been certified should contact MassDEP for a determination.
d. As applicable, all activities shall be compliant with the Massachusetts Stormwater Handbook. The Stormwater Handbook can be accessed on the NAE Regulatory website here: https://www.nae.usace.army.mil/Missions/Regulatory/State-General-Permits/Massachusetts-General-Permit/.
e. No work requiring authorization under Section 404 of the CWA may be performed unless (1) the prospective permittee qualifies for coverage under the April 21, 2023 General 401 WQC, (2) the prospective permittee receives an individual Section 401 WQC from the MassDEP, or (3) the MassDEP waives individual Section 401 WQC.

9. Coastal Zone Management. The permittee must obtain CZM consistency concurrence when an activity is located in the coastal zone in order to be eligible under the MA GP. This requirement

shall be satisfied by acquiring one of the following from the Massachusetts Office of Coastal Zone Management (MA CZM):

a. General CZM Federal Consistency Concurrence (General Concurrence): MA CZM has granted General Concurrence for all SV and PCN activities for GPs 1-25. The prospective permittee must obtain all applicable permits and approvals before construction of the authorized activity begins (e.g., before work begins on site). For SVs, General Concurrence is automatically granted and no further action is required from the prospective permittee. For PCNs, the USACE will coordinate with MA CZM to acquire General Concurrence as part of the PCN application review.
b. Individual CZM Federal Consistency Concurrence (Individual Concurrence): In certain cases, MA CZM may elevate any GP activity 1-25 and require Individual Concurrence. The prospective permittee must contact MA CZM and follow the procedures to obtain Individual Concurrence as determined appropriate by MA CZM.
c. Permittees must obtain CZM consistency concurrence as outlined above before commencing work authorized under these GPs.

10. Federal Threatened and Endangered Species

a. No activity is authorized under any GP which is likely to directly or indirectly jeopardize the continued existence of a threatened or endangered species or a species proposed for such designation, as identified under the Federal Endangered Species Act (ESA), or which will directly or indirectly destroy or adversely modify designated critical habitat or critical habitat proposed for such designation. No activity is authorized under any GP which "may affect" a listed species or critical habitat, unless ESA section 7 consultation addressing the consequences of the proposed activity on listed species or critical habitat has been completed. See 50 CFR 402.02 for the definition of "effects of the action" for the purposes of ESA section 7 consultation, as well as 50 CFR 402.17, which provides further explanation under ESA section 7 regarding "activities that are reasonably certain to occur" and "consequences caused by the proposed action."
b. Other Federal agencies should follow their own procedures for complying with the requirements of the ESA (see 33 CFR 330.4(f)(1)). If a PCN is required for the proposed activity, the Federal permittee must provide USACE with the appropriate documentation to demonstrate compliance with those requirements. The USACE will verify that the appropriate documentation has been submitted. If the appropriate documentation has not been submitted, additional ESA section 7 consultation may be necessary for the activity and the respective federal agency would be responsible for fulfilling its obligation under section 7 of the ESA.
c. USFWS ESA-Listed Species: Non-federal applicants shall use the USFWS website, Information for Planning and Consultation (IPAC), to determine if their activity is located within the ESA-listed species range. The IPAC website can be accessed on the NAE Regulatory website: https://www. nae.usace.army.mil/Missions/Regulatory/State-General-Permits/Massachusetts-General-Permit/. Applicants shall ensure they have an updated, valid species list before construction begins. This may require applicants to update their species list in IPAC before the start of construction. Note: Applicants should refer to the NAE Regulatory Website at the link above to determine if they have been designated as a non-federal representative. Applicants shall complete Section 7 consultation according to the guidance document located on the NAE Regulatory Website. After completing the Rangewide Determination Key and reaching the outcome "may affect, not likely to adversely affect", you may be required to wait up to 15 days before that outcome is final and compliance under Section 7 of the ESA is fulfilled.

i. *Self-Verification Criteria*: The activity is SV-eligible if:
   1) The activity is not located within the ESA-listed species range;
   2) Another (lead) Federal agency has completed Section 7 consultation; or
   3) The activity is located within the ESA-listed species range ***and*** USACE has designated the applicant as a non-federal representative under 50 CFR 402.08 of the ESA for all

species within the project's action area. As the non-federal representative, the applicant shall complete consultation through IPAC and reach the outcome of "no effect" or "not likely to adversely affect".

ii. *Pre-Construction Notification Criteria*: The activity requires a PCN if:

1) The activity is located within the ESA-listed species range ***and*** USACE has NOT designated the applicant as a non-federal representative under 50 CFR 402.08 of the ESA for all species within the project's action area;

2) The activity is located in designated or proposed critical habitat; or

3) The activity is located within the ESA-listed species range and completion of the IPAC determination key has resulted in the outcome of "may affect" or "may affect, likely to adversely affect"; or

4) A PCN is required elsewhere in this document.

d. NOAA-Listed Species: Non-federal applicants shall refer to the Section 7 Mapper for federally listed species to determine if any species are mapped as present. When NOAA-listed species are present, the applicant shall generate a species report through the mapper and submit this document as part of their PCN or SVN submission. The NOAA Fisheries' Section 7 Mapper can be accessed here on the NAE Regulatory website here: https://www.nae.usace.army.mil/Missions/Regulatory/State-General-Permits/Massachusetts-General-Permit/.

e. Authorization of an activity by an GP does not authorize the "take" of a threatened or endangered species as defined under the ESA. In the absence of separate authorization (e.g., an ESA Section 10 Permit, a Biological Opinion with "incidental take" provisions, etc.) from the FWS or the NMFS, the Endangered Species Act prohibits any person subject to the jurisdiction of the United States to take a listed species, where "take" means to harass, harm, pursue, hunt, shoot, wound, kill, trap, capture, or collect, or to attempt to engage in any such conduct. The word "harm" in the definition of "take" means an act which actually kills or injures wildlife. Such an act may include significant habitat modification or degradation where it actually kills or injures wildlife by significantly impairing essential behavioral patterns, including breeding, feeding or sheltering.

11. Essential Fish Habitat (EFH).

a. SV eligible activities have been determined to result in no more than minimal adverse effects, provided the permittee complies with all terms and conditions of the MA GP as appliable to the activity. NMFS has granted General Concurrence [50 CFR 600.920(g)] for all SV eligible activities. These activities do not require project specific EFH consultation.

b. For PCN required activities, the applicant is required to describe and identify potential adverse effects to EFH and should refer to NOAA Fisheries' EFH Mapper (http://www.fisheries.noaa.gov/resource/map/essential-fish-habitat-mapper) and Omnibus Essential Fish Habitat Amendment 2 Volume 2: EFH and HAPC Designation Alternatives and Environmental Impacts (https://www.habitat.noaa.gov/application/efhmapper/oa2_efh_hapc.pdf). If an activity is located within EFH, the PCN application must contain:

1. A description of the action located in EFH.
2. An analysis of the potential adverse effects of the action on EFH and the managed Species.
3. Conclusions regarding the effects of the action on EFH.
4. Proposed mitigation, if applicable (refer to the mitigation thresholds located in Section V).

c. Federal agencies shall follow their own procedures for complying with the EFH requirements of the Magnuson-Stevens Fishery Conservation and Management Act. For activities requiring a PCN, the applicant is responsible for furnishing documentation that demonstrates consultation for EFH has been completed.

d. For PCN activities, no work may commence until EFH consultation as required by the Magnuson-Stevens Act has been completed.

12. National Lands. Activities that impinge upon the value of any National Wildlife Refuge, National Forest, National Marine Sanctuary, National Historic Landmarks or any other area administered by the National Park Service, U. S. Fish and Wildlife Service (USFWS) or U.S. Forest Service (USFS) require a PCN or Individual Permit. Federal land managers seeking authorization for activities located in the above listed National Lands may proceed under SV, unless a PCN is required elsewhere in this document.

13. Wild and Scenic Rivers. The following activities in designated river or study river segments in the National Wild and Scenic River (WSR) System require a PCN unless the Federal agency with direct management responsibility for such river, in Massachusetts this is generally the National Park Service, has determined in writing to the proponent that the proposed work will not adversely affect the WSR designation or study status:

a. Activities that occur in WSR segments, in and 0.25 miles up or downstream of WSR segments, or in tributaries within 0.25 miles of WSR segments;
b. Activities that occur in wetlands within 0.25 miles of WSR segments;
c. Activities that have the potential to alter free-flowing characteristics in WSR segments.

No GP activity may occur in a component of the National Wild and Scenic River System, or in a river officially designated by Congress as a “study river” for possible inclusion in the system while the river is in an official study status, unless the appropriate Federal agency with direct management responsibility for such river, has determined in writing that the proposed activity will not adversely affect the Wild and Scenic River designation or study status.

As of May 10, 2023, affected rivers in Massachusetts include: the Taunton River (40 miles), Sudbury River (16.6 miles), Assabet River (4.4 miles), Concord River (8 miles), Nashua River (27 miles), Squannacook River (16.3 miles), Nissitissit River (4.7 miles), and the Westfield River, including West Branch, Middle Branch, Gendale Brook, East Branch, Drowned Land Brook, Center Brook, Windsor Jambs Brook, Shaker Mill Brook, Depot Brook, Savery Brook, Watson Brook, Center Pond Brook (78.1 miles). The most up to date list of designated and study rivers and their descriptions may be obtained from the appropriate Federal land management agency responsible for the designated Wild and Scenic River or study river (e.g., National Park Service, U.S. Forest Service, Bureau of Land Management, U.S. Fish and Wildlife Service). Information on these rivers is also available at: http://www.rivers.gov/.

14. Historic Properties

a. For all SV and PCN applications, permittees shall follow the guidance set forth in Appendix A, Guidance for NHPA Section 106 Compliance in Massachusetts.

b. No undertaking authorized by these GPs shall cause effects[1] (defined in 36 CFR Part 800 and 33 CFR Part 325, Appendix C, and its Interim Guidance) on properties listed on, determined to be eligible for listing on, or potentially eligible for listing on the National Register of Historic Places (NRHP)[2], including previously unknown historic properties within the permit area, unless the USACE or another Federal action agency has satisfied the consultation requirements of Section 106 of the National Historic Preservation Act (Section 106). If another Federal agency is determined the lead federal agency for compliance with Section 106, applicant must obtain the appropriate documentation and provide this information to the USACE to demonstrate compliance with Section 106. The applicant shall not begin the activity until the USACE notifies them in writing that the documentation provided satisfies Section 106 requirements.

[1] Effect means the alteration to the characteristics of a historic property qualifying it for inclusion in or eligibility for the National Register of Historic Properties.
[2] See the NAE Regulatory website, National Register of Historic Places link here: https://www.nae.usace.army.mil/Missions/Regulatory/State-General-Permits/Massachusetts-General-Permit/.

c. Many historic properties are not listed on the NRHP and may require identification and evaluation by qualified historic preservation and/or archaeological consultants. The State Historic Preservation Officer (SHPO), Massachusetts Board of Underwater Archaeological Resources (BUAR), local historical societies, certified local governments, general public, and NRHP may also be able to assist with locating information on:

i. Previously identified historic properties; and
ii. Areas with potential for the presence of historic properties.

d. Discovery of Previously Unknown Remains and Artifacts: If any previously unidentified human remains, cultural deposits, or artifacts are discovered while accomplishing the activity authorized by this permit, you must immediately notify the USACE of what you have found, and to the maximum extent practicable, cease work and avoid construction activities that may affect the remains and artifacts until the required coordination has been completed. The USACE will initiate the Federal, State and tribal coordination required to determine if the items or remains warrant a recovery effort and/or if the site is eligible for listing in the National Register of Historic Places.

e. Section 110k: Prospective permittees should be aware that section 110k of the NHPA (54 U.S.C. § 306113) prevents the USACE from granting a permit or other assistance to an applicant who, with intent to avoid the requirements of Section 106, has intentionally significantly adversely effected a historic property to which the permit would relate, or having legal power to prevent it, allowed such significant adverse effect to occur, unless the USACE, after consultation with the Advisory Council on Historic Preservation (ACHP), determines that circumstances justify granting such assistance despite the adverse effect created or permitted by the applicant. If circumstances justify granting the assistance, the USACE is required to notify the ACHP and provide documentation specifying the circumstances, the degree of damage to the integrity of any historic properties effected, and proposed mitigation. This documentation must include any views obtained from the applicant, SHPO/THPO, appropriate Indian tribes if the undertaking occurs on or effects historic properties on tribal lands or effects properties of interest to those tribes, and other parties known to have a legitimate interest in the impacts to the permitted activity on historic properties.

f. Underwater Archaeological Resources: Under Massachusetts General Law Ch. 6, s.'s 179-180, and Ch. 91, s. 63, the BUAR has statutory jurisdiction within state waters and is the sole trustee of the Commonwealth's underwater heritage, charged with the responsibility of encouraging the discovery and reporting, as well as the preservation and protection, of underwater archaeological resources. Underwater archaeological resources located within the waters of the Commonwealth of Massachusetts are property of the Commonwealth, which holds title to these resources and retains regulatory authority over their use. Under Massachusetts General Law, no person, organization or corporation may "remove, displace, damage, or destroy" any underwater archaeological resources located within the Commonwealth's submerged lands except through consultation with the BUAR and in conformity with the permits it issues. https://www.mass.gov/orgs/board-of-underwater-archaeological-resources.

15. USACE Property and Federal Projects. (33 USC §408)

a. USACE projects and property can be found at: https://www.nae.usace.army.mil/Missions/Civil-Works/.

b. In addition to any authorization under these GPs, prospective permittee shall contact the USACE Real Estate Division (https://www.nae.usace.army.mil/Missions/Real-Estate-Division/) at (978) 318-8585 for work occurring on or potentially affecting USACE properties and/or USACE-controlled easements. Work may not commence on USACE properties and/or USACE-controlled easements until they have received any required USACE real estate documents evidencing site-specific permission to work.

c. Any proposed temporary or permanent occupation or alteration of a Federal project (including, but not limited to, a levee, dike, floodwall, channel, anchorage, breakwater, seawall, bulkhead, jetty, wharf, pier, or other work built or maintained but not necessarily owned by the United States),

is not eligible for SV and requires a PCN. This includes all proposed structures and work in, over, or under a USACE federal navigation project (FNP) or in the FNP's buffer zone. The buffer zone is an area that extends from the horizontal limits of the FNP to a distance of three times the FNP's authorized depth. The activity also requires review and approval by the USACE pursuant to 33 USC 408 (Section 408 Permission). The prospective permittee may reach out to the POCs located here: https://www.nae.usace.army.mil/ Missions/Section-408/.
d. Any structure or work constructed in a FNP or its buffer zone shall be subject to removal at the owner's expense prior to any future USACE dredging or the performance of periodic hydrographic surveys.
e. Where a Section 408 permission is required, written verification for the PCN will not be issued prior to the decision on the Section 408 permission request.

16. Navigation
a. No activity may cause more than a minimal adverse effect on navigation.
b. Any safety lights and signals prescribed by the U.S. Coast Guard, must be installed, and maintained at the permittee's expense on authorized facilities in navigable waters of the U.S.
c. There shall be no unreasonable interference with navigation by the existence or use of the activity authorized herein, and no attempt shall be made by the permittee to prevent the full and free use by the public of all navigable waters at or adjacent to the activity authorized herein.
d. The permittee understands and agrees that if future U.S. operations require the removal, relocation, or other alteration of the structure or work herein authorized, or if, in the opinion of the Secretary of the Army or his authorized representative, said structure or work shall cause unreasonable obstruction to the free navigation of the navigable waters, the permittee will be required, upon due notice from USACE, to remove, relocate, or alter the structural work or obstructions caused thereby, without expense to the U.S. No claim shall be made against the U.S. on account of any such removal or alteration.

17. Permit/Authorization Letter On-Site. For PCNs, the permittee shall ensure that a copy of these GPs and the accompanying authorization letter are at the work site (and the project office) whenever work is being performed, and that all personnel with operational control of the site ensure that all appropriate personnel performing work are fully aware of its terms and conditions. The entire permit authorization shall be made a part of any and all contracts and sub-contracts for work that affects areas of USACE jurisdiction at the site of the work authorized by these GPs. This shall be achieved by including the entire permit authorization in the specifications for work. The term "entire permit authorization" means these GPs, including GCs and the authorization letter (including its drawings, plans, appendices, special conditions, and other attachments), and any permit modifications. If the authorization letter is issued after the construction specifications, but before receipt of bids or quotes, the entire permit authorization shall be included as an addendum to the specifications. If the authorization letter is issued after receipt of bids or quotes, the entire permit authorization shall be included in the contract or sub-contract as a change order. Although the permittee may assign various aspects of the work to different contractors or sub-contractors, all contractors and sub-contractors shall be obligated by contract to comply with all environmental protection provisions contained within the entire authorization letter, and no contract or sub-contract shall require or allow unauthorized work in areas of USACE jurisdiction. For SVs, the permittee shall ensure that a complete and signed copy of the SVN is present on site during construction and is made available for review at any time by USACE and other Federal, State, & Local regulatory agencies. A complete and signed copy of the SVN must be submitted to USACE Regulatory within 30 days of initiating construction of the authorized activity, unless stated otherwise in the applicable GP.

18. Storage of Seasonal Structures. Coastal structures such as pier sections, floats, etc., that

are removed from the waterway for a portion of the year (often referred to as seasonal structures) shall be stored in an upland location, located above MHW and not in tidal wetlands. These seasonal structures may be stored on the fixed, pile-supported portion of the structure that is seaward of MHW. This is intended to prevent structures from being stored on the marsh substrate and the substrate seaward of MHW.

19. Pile Driving and Pile Removal in Navigable Waters.
a. Derelict, degraded or abandoned piles and sheet piles in navigable waters of the U.S., except for those inside existing work footprints for piers, must be completely removed, cut and/or driven to 3 feet below the substrate to prevent interference with navigation, and existing creosote piles that are affected by project activities shall be completely removed if practicable. In areas of fine-grained substrates, piles must be removed by the direct, vibratory or clamshell pull method[1] to minimize sedimentation and turbidity impacts and prevent interference with navigation from cut piles. Removed piles shall be disposed of in an upland location landward of MHW or OHW and not in wetlands, tidal wetlands or mudflats.
b. A PCN is required for the installation or removal of structures with jetting techniques.
c. A PCN is required for the installation of >12 inch-diameter piles of any material type or steel piles of any size in tidal waters, unless they are installed in the dry. If piles are not installed in the dry:
i. Impact pile driving shall commence with an initial set of three strikes by the hammer at 40% energy, followed by a one-minute wait period, then two subsequent 3-strike sets at 40% energy, with one minute waiting periods, before initiating continuous impact driving.
ii. Vibratory pile driving shall be initiated for 15 seconds at reduced energy followed by a one-minute waiting period. This sequence of 15 seconds of reduced energy driving, one-minute waiting period shall be repeated two more times, followed immediately by pile-driving at full rate and energy.
iii. In addition to using a soft start at the beginning of the workday for pile driving as described in 19c(i-ii), a soft start must also be used at any time following a cessation of pile driving for a period of 30 minutes or longer.
d. Bubble curtains may be used to reduce sound pressure levels during vibratory or impact hammer pile driving.

20. Time-of-Year (TOY) Restrictions. Activities that include in-water work must comply with the TOY Restrictions below to be SV eligible, otherwise a PCN is required. PCN submittals shall contain written justification for deviation from the TOY Restrictions. The term “in-water work” does not include conditions where the work site is “in-the-dry” (e.g., intertidal areas exposed at low tide). The term “in-the-dry” includes work contained within a cofferdam so long as the cofferdam is installed and subsequently removed outside the TOY Restriction. The TOY restrictions stated in Appendix B of the MA DMF Technical Report TR-47[2] can apply instead for activities in tidal waters if (1) TOYs are provided for a specific waterbody where the activity is proposed and (2) the TOYs are less restrictive than below. The activity must also not require a PCN elsewhere in this document to be SV eligible.

[1] Direct Pull: Each piling is wrapped with a choker cable or chain that is attached at the top to a crane. The crane then pulls the piling directly upward, removing the piling from the sediment. Vibratory Pull: The vibratory hammer is a large mechanical device (5-16 tons) that is suspended from a crane by a cable. The vibrating hammer loosens the piling while the crane pulls up. Clamshell Pull: This can remove intact, broken or damaged pilings. The clamshell bucket is a hinged steel apparatus that operates like a set of steel jaws. The bucket is lowered from a crane and the jaws grasp the piling stub as the crane pulls up. The size of the clamshell bucket is minimized to reduce turbidity during piling removal.
[2] The MA DMF Technical Report TR-47: https://www.nae.usace.army.mil/Missions/Regulatory/State-General-Permits/Massachusetts-General-Permit/

	TOY Restriction (No work)
Non-tidal Waters	Defer to TR-47
Tidal Waters	January 15 – November 15

Alternate work windows proposed under a PCN will generally be coordinated with the USFWS and NMFS. Resulting written verifications may include species-specific work allowed windows.

21. Heavy Equipment in Wetlands. Operating heavy equipment (drill rigs, fixed cranes, etc.) within wetlands shall be minimized, and such equipment shall not be stored, maintained, or repaired in wetlands, to the maximum extent practicable. Where construction requires heavy equipment operation in wetlands, the equipment shall:

i. Have low ground pressure (typically ≤3 psi);

ii. Be placed on swamp/construction/timber mats (herein referred to as "construction mats" or "mats") that are adequate to support the equipment in such a way as to minimize disturbance of wetland soil and vegetation. See GC 22 for information on the placement of construction mats; or

iii. Be operated on adequately dry or frozen wetlands such that shear pressure does not cause subsidence of the wetlands immediately beneath the equipment and upheaval of adjacent wetlands. Construction mats are to be placed in the wetland from the upland or from equipment positioned on mats if working within a wetland. Dragging construction mats into position is prohibited. Other support structures that are capable of safely supporting equipment may be used with written USACE authorization.

22. Temporary Fill, Work & Construction Mats.

a. *Construction mats in non-tidal waters*: Temporary construction mats shall be in place ≤1 year *and* for one growing season or less to be SV eligible. A PCN is required if construction mats are in place >1 year *or* for more than one growing season. Construction mats can be placed in an area of any size in non-tidal waters. The activity may occur in segments to ensure the requirements for SV above are met, otherwise a PCN is required.

b. *Construction mats in tidal waters*: Temporary construction mats placed in an area <5,000 SF in tidal waters are SV eligible, provided those mats are in place ≤6 months. Temporary construction mats placed in an area ≥5,000 SF or in place >6 months in tidal waters require a PCN.

c. *Management of construction mats:* At a minimum, construction mats shall be managed in accordance with the following construction mat best management practices (BMPs):

1. Mats shall be in good condition to ensure proper installation, use, and removal.
2. As feasible, mats shall be placed in a location that will minimize the amount of mats needed for the wetland crossing(s).
3. Inspect mats prior to their re-use and remove any plant debris. Mats are to be thoroughly cleaned before re-use to prevent the spread of invasive plant species.
4. Impacts to wetland areas shall be minimized during installation, use, and removal of the mats.
5. Adequate erosion & sediment controls shall be installed at approaches to mats to promote a smooth transition to, and minimize sediment tracking onto, the mats.
6. In most cases, mats should be placed along the travel area so that the individual boards are resting perpendicular to the direction of traffic. No gaps should exist between mats. Place mats far enough on either side of the resource area to rest on firm ground.

d. A PCN is required for temporary fills in place >2 years. All temporary fills and disturbed soils shall be stabilized to prevent the material from eroding into waters of the U.S. where it is not authorized. Work shall include phased or staged development to ensure only areas under active development are exposed and to allow for stabilization practices as soon as practicable. Temporary fill must be placed in a manner that will prevent it from being eroded by expected high flows.

e. Activities that require unconfined temporary fill and are authorized for discharge into waters of the U.S. shall consist of material that minimizes effects to water quality.
f. Appropriate measures must be taken to maintain normal downstream flows and minimize flooding to the maximum extent practicable when temporary structures, work, and discharges of dredged or fill material, including cofferdams, are necessary for construction activities, access fills, or dewatering of construction sites. Materials shall be placed in a location and manner that does not adversely impact surface or subsurface water flow into or out of the wetland. Temporary fill authorized for discharge into wetlands shall be placed on geotextile fabric or other appropriate material laid on the pre-construction wetland grade where practicable to minimize impacts and to facilitate restoration to the original grade. Construction mats are excluded from this requirement.
g. Construction debris and deteriorated materials shall not be located in waters of the U.S.
h. Temporary fills, construction mats, and corduroy roads shall be entirely removed as soon as they are no longer needed to construct the authorized activity and the disturbed areas be restored to pre-construction contours and conditions.
i. Construction equipment, such as temporary barges in tidal waters, shall provide clearance above the substrate to avoid grounding onto the substrate during all tides.

23. Restoration of Wetland Areas.
a. Upon completion of construction, all disturbed wetland areas shall be stabilized with a wetland seed mix or plant plugs containing only plant species native to New England, and be appropriate for site conditions, including salinity and frequency of inundation, and shall not contain any species listed in the “Invasive and Other Unacceptable Plant Species” Appendix K of the New England District “Compensatory Mitigation Standard Operating Procedures” found at https://www.nae.usace.army.mil/Missions/Regulatory/Mitigation.aspx.
b. The introduction or spread of invasive plant species in disturbed areas shall be prevented and controlled. Equipment shall be thoroughly cleaned before and after project construction to prevent the spread of invasive species. This includes, but is not limited to, tire treads and construction mats.
c. In areas of authorized temporary disturbance, if trees are cut in USACE jurisdiction, they shall be cut at or above ground level and not uprooted in order to prevent disruption of any kind to the wetland soil structure and to allow stump sprouts to revegetate the work area, unless otherwise authorized.
d. Wetland areas where permanent disturbance is not authorized shall be restored to their original condition and elevation, which under no circumstances shall be higher than the pre-construction elevation. Original condition means careful protection and/or removal of existing soil and vegetation, and replacement back to the original location such that the original soil layering and vegetation schemes are approximately the same, unless otherwise authorized.

24. Bank Stabilization.
a. Projects involving construction or reconstruction/maintenance of bank stabilization within USACE jurisdiction shall be designed to minimize environmental effects, effects to neighboring properties, scour, conversion of natural shoreline to hard armoring, etc. to the maximum extent practicable.
b. Projects involving the construction of new bank stabilization within USACE jurisdiction shall use bioengineering techniques and natural materials in the project design to the maximum extent practicable. Use of hard structures shall be eliminated or minimized unless the prospective permittee can demonstrate that use of bioengineering techniques is not practicable due to site conditions.
c. Where possible, bank stabilization projects shall optimize the natural function of the shoreline, including self-sustaining stability to attenuate flood flows, fishery, wildlife habitat and water quality protection, while protecting upland infrastructure from storm events that can cause erosion as well as impacts to public and private property.
d. No material shall be placed in excess of the minimum needed for erosion protection.
e. No material shall be placed in a manner that will be eroded by normal or expected high flows (properly anchored native trees and treetops may be used in low energy areas).

f. Native plants appropriate for current site conditions, including salinity, must be used for bioengineering or vegetative bank stabilization.
g. The activity must be properly maintained, which may require repairing it after severe storms or erosion events.

25. Soil Erosion and Sediment Controls.
a. Appropriate soil erosion and sediment controls[1] (hereinafter referred to as "controls") must installed prior to earth disturbance and maintained in effective operating condition during construction. Biodegradable wildlife friendly erosion controls should be used whenever practicable to minimize effects to water quality.
b. Activities in streams (rivers, streams, brooks, etc.) and tidal waters that are capable of producing sedimentation or turbidity should be done during periods of low-flow or no-flow, when the stream or tide is waterward of the work area. Controls may also be used to obtain dry work conditions (e.g., coffer dam, turbidity curtain). The prospective permittee must demonstrate in the project plans where the controls are proposed and how these controls would avoid and/or minimize turbidity or sedimentation.
c. A PCN is required for controls that encroach: i) >25% of the stream width measured from OHW in non-tidal diadromous streams from March 15 to June 30; or ii) >25% of the waterway width measured from MHW in tidal waters from Feb. 1 to June 30, or >50% of the waterway width measured from MHW in tidal waters from July 1 to Jan. 14. This is to protect upstream fish passage. Proponents must also maintain downstream fish passage throughout the project.
d. No dewatering shall occur with direct discharge to waters or wetlands. Excess water in isolated work areas shall be pumped or directed to a sedimentation basin, tank or other dewatering structures in an upland area adequately separated from waters or wetlands. Suspended solids shall be removed prior to discharge back into waters or wetlands from these dewatering structures. All discharge points back into waters and wetlands shall use appropriate energy dissipaters and erosion and sedimentation control BMPs.
e. Temporary controls shall be removed upon completion of work, but not until all exposed soil and other fills, as well as any work waterward of OHW or the HTL, are permanently stabilized at the earliest practicable date. Sediment and debris collected by these devices shall be removed and placed at an upland location in a manner that will prevent its later erosion into a waterway or wetland. Controls may be left in place if they are biodegradable and flows and aquatic life movements are not disrupted.

26. Aquatic Life Movements and Management of Water Flows.
a. No activity may substantially disrupt the necessary life cycle movements of those species of aquatic life indigenous to the waterbody, including those species that normally migrate through the area, unless the activity's primary purpose is to impound water. All permanent and temporary crossings of waterbodies and wetlands shall be:

i. Suitably spanned, bridged, culverted, or otherwise designed and constructed to maintain low flows to sustain the movement of those aquatic species; and
ii. Properly aligned and constructed to prevent bank erosion or streambed scour both adjacent to and inside the crossing.

[1] Appropriate soil erosion, sediment and turbidity controls include cofferdams, bypass pumping around barriers immediately up and downstream of the work footprint (i.e., dam and pump), installation of sediment control barriers (i.e., silt fence, vegetated filter strips, geotextile silt fences, filter tubes, erosion control mixes, hay bales or other devices) downhill of all exposed areas, stream fords, retention of existing vegetated buffers, application of temporary mulching during construction, phased construction, and permanent seeding and stabilization, etc.

b. To avoid adverse impacts on aquatic organisms, the low flow channel/thalweg shall remain unobstructed during periods of low flow, except when necessary to perform the authorized work.
c. For work in tidal waters, in-stream controls (e.g., cofferdams) should be installed in such a way as to not obstruct fish passage.
d. Riprap and other stream bed materials shall be installed in a manner that avoids organism entrapment in rock voids or water displaced to subterranean flow with crushed stone and riprap.
e. To the maximum extent practicable, the preconstruction course, condition, capacity, and location of open waters must be maintained for each activity, including stream channelization, storm water management activities, and temporary and permanent road crossings, except as provided below. The activity must be constructed to withstand expected high flows. The activity shall not restrict or impede the passage of normal or high flows unless the primary purpose of the activity is to impound water or manage high flows. The activity may alter the pre-construction course, condition, capacity, and location of open waters if it benefits the aquatic environment (e.g., stream restoration or relocation activities).

27. Spawning, Breeding, and Migratory Areas.
a. Activities in spawning areas during spawning seasons must be avoided to the maximum extent practicable. Activities that result in the physical destruction (e.g., through excavation, fill, or downstream smothering by substantial turbidity) of an important spawning area are not authorized under these GPs.
b. Activities in waters of the U.S. that serve as breeding areas for migratory birds must be avoided to the maximum extent practicable.
c. The applicant is responsible for obtaining any "take" permits required under the USFWS's regulations governing compliance with the Migratory Bird Treaty Act or the Bald and Golden Eagle Protection Act. The applicant should contact the appropriate local office of the USFWS to determine if such "take" permits are required for a particular activity.
d. Information on spawning habitat for species managed under the Magnuson-Stevens Fishery Conservation and Management Act (i.e., EFH for spawning adults) can be obtained from NAE Regulatory website, Essential Fish Habitat section, at: https://www.nae.usace.army.mil/Missions/Regulatory/State-General-Permits/Massachusetts-General-Permit/.
e. Information regarding diadromous fish habitat can be obtained from the following DMF website at: https://www.mass.gov/info-details/massgis-data-diadromous-fish.

28. Vernal Pools.
a. A PCN is required if a discharge of dredged or fill material is proposed within a vernal pool depression that is also a water of the U.S.
b. Vernal pools must be identified on the plans that show aquatic resource delineations.
c. Adverse impacts to vernal pools shall be avoided & minimized to the maximum extent practicable.

29. Invasive Species.
a. The introduction, spread or the increased risk of invasion of invasive plant or animal species on the project site, into new or disturbed areas, or areas adjacent to the project site caused by the site work shall be avoided. Construction mats shall be thoroughly cleaned before reuse to avoid spread of invasive species.
b. Unless otherwise directed by USACE, all applications for PCN non-tidal projects proposing fill in USACE jurisdiction shall include an Invasive Species Control Plan. Additional information can be found at: https://www.nae.usace.army.mil/Missions/Regulatory/Invasive-Species/, https://www.nae.usace.army.mil/Missions/Regulatory/Mitigation/.

30. Fills Within 100-Year Floodplains. The activity shall comply with applicable Federal Emergency Management Agency (FEMA) approved, Massachusetts Emergency Management

Agency (MEMA) approved and/or local floodplain management requirements. Applicants should contact FEMA and/or MEMA regarding floodplain management requirements.

31. Stream Work and Crossings & Wetland Crossings.
a. When feasible, all temporary and permanent crossings of waterbodies and wetlands (hereinafter referred to as "crossings") shall conform to the "Massachusetts River and Stream Crossing Standards" located at: https://www.mass.gov/doc/massachusetts-river-and-stream-crossing-standards/download or https://www.nae.usace.army.mil/Missions/Regulatory/State-General-Permits/Massachusetts-General-Permit/. Projects that do not conform to these guidelines shall be reviewed under PCN or IP procedures.
b. Crossings shall be suitably culverted, bridged, or otherwise designed to withstand and to prevent the restriction of high flows, to maintain existing low flows, maintain water quality, and not obstruct the movement of aquatic life indigenous to the waterbody beyond the duration of construction.
c. Crossings shall be installed in such a manner as to preserve hydraulic capacity and flow, sediment transport, and organism passage at its present level, between the wetlands on either side of the road. The applicant shall take necessary measures to correct any wetland damage resulting from deficiencies in hydraulic capacity, sediment transport and organism passage.
d. Stream crossings shall utilize a natural mixed grain-size streambed material composition that matches upstream and downstream substrates to create a stable streambed. Substrate should function appropriately during normal and high flows without washing out. If natural streambed material is not utilized, a PCN is required.
e. Activities involving open trench excavation in flowing waters require a PCN. Work should not occur in flowing waters (requires using management techniques such as temporary flume pipes, culverts, cofferdams, etc.). Normal flows should be maintained within the stream boundary's confines when practicable. Projects utilizing these management techniques must meet all applicable terms and conditions of the GP, including the GCs in Section IV.

32. Utility Line Installation and Removal
a. Subsurface utility lines must be installed at a sufficient depth to avoid damage from anchors, dredging, etc., and to prevent exposure from erosion and stream adjustment.
b. When utility lines are installed via horizontal directional drilling, a frac-out contingency plan shall be present on site for the duration of construction. As necessary, the applicant shall immediately contain, control, recover, and remove drilling fluids released into the environment.
c. Abandoned or inactive utility lines must be removed and faulty lines (e.g., leaking hazardous substances, petroleum products, etc.) must be removed or repaired. A written verification from the USACE is required if they are to remain in place, e.g., to protect sensitive areas or ensure safety.
d. Utility lines shall not adversely alter existing hydrology, and trenches cannot be constructed or backfilled in such a manner as to drain waters of the U.S. (e.g., backfilling with extensive gravel layers, creating a French drain effect). In wetland areas, structures such as ditch plugs, cut-off walls, clay blocks, bentonite, or other suitable material shall be used within utility trenches to ensure that the trench through which the utility line is installed does not drain waters of the U.S. including wetlands.
e. Stockpiling of tree debris, to the extent where it has the effect of fill material, shall not occur in waters of the U.S. Tree debris shall be removed from waters of the U.S. and placed in uplands without causing additional disturbance to aquatic resources. Failure to meet this condition could change the bottom elevation of the wetland and be considered a discharge of fill material, and depending on the area of alteration, may require a PCN or IP.

33. Water Supply Intakes. No activity may occur in the proximity of a public water supply intake, except where the activity is for the repair or improvement of public water supply intake structures or adjacent bank stabilization.

34. Coral Reefs. Impacts to coral reefs are not authorized under these GPs. Coral reefs consist of the skeletal deposit, usually of calcareous or silicaceous materials, produced by the vital activities of anthozoan polyps or other invertebrate organisms present in growing portions of the reef.

35. Blasting. Blasting in waters of the U.S. associated with work such as dredging, trenching, pile installation, etc. is not authorized under these GPs.

36. Inspections. The permittee shall allow USACE to make periodic inspections at any time deemed necessary to ensure that the work is being or has been performed in accordance with the terms and conditions of this permit. To facilitate these inspections, for activities requiring a PCN, the permittee shall complete and return the Certificate of Compliance when it is provided with a PCN verification letter. For SV-eligible activities, the permittee shall complete and submit the SVN to USACE within 30 days of initiating project construction, at which point, USACE may opt to inspect the activity to verify compliance with the terms and conditions of the GP. Post-construction engineering drawings may be required by USACE for completed work. This includes post-dredging survey drawings for any dredging work.

37. Maintenance. The permittee shall maintain the activity authorized by these GPs in good condition and in conformance with the terms and conditions of this permit. Some maintenance activities may not be subject to federal regulation under Section 404 in accordance with 33 CFR 323.4(a)(2). This condition is not applicable to maintenance of dredging projects. Prospective permittees should contact USACE to inquire about maintenance of dredging projects, and its eligibility under these GPs. Maintenance dredging is subject to the review thresholds in GP #7 as well as any conditions included in a written USACE authorization. Maintenance dredging includes only those areas and depths previously authorized and dredged.

38. Property Rights. Per 33 CFR 320.4(g)(6), these GPs do not convey any property rights, either in real estate or material, or any exclusive privileges, nor do they authorize any injury to property or invasion of rights or any infringement of Federal, State, or local laws or regulations.

39. Transfer of GP Verifications. When the work authorized by these GPs is still in existence at the time the property is transferred, the terms and conditions of these GPs, including any special conditions, will continue to be binding on the entity or individual who received the GP authorizations, as well as the new owner(s) of the property. If the permittee sells the property associated with a GP authorization, the applicant may transfer the GP authorization to the new owner by submitting a letter to USACE to validate the transfer. A copy of the GP authorization letter must be attached to the letter, and the letter must include the following statement: “The terms and conditions of these general permits, including any special conditions, will continue to be binding on the new owner(s) of the property.” This letter shall be signed by both the seller and new property owner(s).

40. Modification, Suspension, and Revocation. These GPs and any individual authorization issued thereof may be either modified, suspended, or revoked in whole or in part pursuant to the policies and procedures of 33 CFR 325.7; and any such action shall not be the basis for any claim for damages against the U.S.

41. Special Conditions. The USACE may impose other special conditions on a project authorized pursuant to these GPs that are determined necessary to minimize adverse navigational and/or environmental effects or based on any other factor of the public interest. Failure to comply with all conditions of the authorization, including special conditions, constitutes a permit violation and may subject the applicant to criminal, civil, or administrative penalties or restoration.

42. False or Incomplete Information. If USACE makes a determination regarding the eligibility of a project under these GPs, and subsequently discovers that it has relied on false, incomplete, or inaccurate information provided by the applicant, the authorization will not be valid, and the U.S. Government may institute appropriate legal proceedings.

43. Abandonment. If the permittee decides to abandon the activity authorized under these GPs, unless such abandonment is merely the transfer of property to a third party, he/she/they may be required to restore the area to the satisfaction of USACE.

44. Enforcement cases. These GPs do not apply to any existing or proposed activity in USACE jurisdiction associated with an on-going USACE or EPA enforcement action, until such time as the enforcement action is resolved or USACE or EPA determines that the activity may proceed independently without compromising the enforcement action.

45. Previously Authorized Activities.

a. Completed projects that received prior authorization from USACE (SV or PCN), shall remain authorized in accordance with the original terms and conditions of those authorizations, including their terms, GCs, and any special conditions provided in a written verification.

b. Activities authorized pursuant to 33 CFR 330.3 (activities occurring before certain dates) are not affected by these GPs.

46. Duration of Authorization.

These GPs expire on June 1, 2028. Activities authorized under these GPs will remain authorized until the GPs expire, unless discretionary authority has been exercised on a case-by-case basis to modify, suspend, or revoke the authorization in accordance with 33 CFR 325.2(e)(2). Activities authorized under GPs 1-25 that have either commenced (i.e., are under construction) or are under contract to commence in reliance upon this authorization will have until June 1, 2029 to complete the work. If requested by USACE, the permittee shall furnish documentation that demonstrates the project was under construction or under contract to commence by June 1, 2028. If work is not completed before June 1, 2029, the permittee must contact USACE. The USACE may issue a new authorization provided the project meets the terms and conditions of the MA GPs in effect at the time. Activities completed under the SV or PCN authorizations of these GPs will continue to be authorized after their expiration date.

SECTION V: MITIGATION STANDARDS

1. Mitigation Types

For all activities, applicants must (a) demonstrate how the project has been designed to avoid or minimize impacts to aquatic resources; and (b) describe measures taken to avoid or minimize impacts to aquatic resources through construction techniques and/or site access. Please see https://www.nae.usace.army.mil/Missions/Regulatory/Mitigation/ for assistance with preparing mitigation in accordance with the 2008 Compensatory Mitigation for Losses of Aquatic Resources; Final Rule (33 CFR 332.3), hereafter referred to as "2008 Mitigation Rule."

Avoidance - Avoidance of impacts (direct and indirect) to aquatic resources means that project activities would not result in the placement of fill material or installation of a structure that could impact the resource area. Avoidance can include, but is not limited to, designing the project to avoid impacts to all or a portion of the aquatic resource areas.

Minimization - Minimization of impacts (direct and indirect) to aquatic resources means that measures are taken to ensure the amount and duration of impacts are limited to the maximum extent practicable. There are many minimization measures that could be implemented, prior to, during, or after the proposed activity, to ensure impacts are minimized. Examples include, but are not limited to:

- Permanent preservation of avoided aquatic features and buffer zone, in perpetuity. In these cases, the preserved area would be under a conservation easement and managed by conservation oriented third-party manager.
- Utilization of best management practices (BMPs) to ensure impacts are limited, and do not result in adverse impacts to the integrity and long-term functions of preserved/avoided features.

Compensatory Mitigation - Compensatory mitigation is generally required for PCN activities in which the impacts to the aquatic resources have been avoided and minimized to the maximum extent practicable but would still result in unavoidable adverse effects to the environment that are considered more than minimal or are contrary to the public interest. *Whatever the case may be, compensatory mitigation is no substitute for avoidance and minimization.*

2. Thresholds for Compensatory Mitigation

The basic objective of compensatory mitigation in the USACE Regulatory Program is to offset environmental losses resulting from unavoidable impacts to waters of the U.S. authorized by Department of the Army permits. **The following compensatory mitigation thresholds apply to all PCN activities that result in loss[1] of the resource area types listed below. Activities[2] in waters of the U.S. associated with the restoration, enhancement, and establishment of tidal and non-tidal aquatic resources are not considered loss and are not subject to the thresholds below.** Thresholds for different resource areas may not be combined to exceed 5,000 SF of total loss of all waters. The USACE will continue to evaluate projects on a case-by-case basis, and may in some cases require compensatory mitigation below these thresholds (e.g. minor impacts that add to a cumulative loss).

[1] See definition of loss in Section VII.
[2] These activities must result in net increases in aquatic resource functions and services to be exempted from the thresholds above.

Compensatory Mitigation Thresholds in Massachusetts		
Resource Area	**Non-Tidal Threshold**	**Tidal Threshold**
Stream	200 LF	200 LF
Bank Stabilization	500 LF	500 LF
Open Water	Project Dependent	Project Dependent
Wetland	5,000 SF	500 SF
Vernal Pool	All	N/A
SAV	Project dependent	25 SF
Mudflat	N/A	1,000 SF
Intertidal	N/A	1,000 SF

These thresholds can be utilized to determine at what point compensatory mitigation is required but are not used to determine how much mitigation may be needed to offset impacts to resources. Per the 2008 Mitigation Rule (33 CFR 332.3(f)(1)) "the amount of required compensatory mitigation must be, to the extent practicable, sufficient to replace lost aquatic resource functions. In cases where appropriate functional or condition assessment methods or other suitable metrics are available, these methods should be used where practicable to determine how much compensatory mitigation is required. If a functional or condition assessment or other suitable metric is not used, a minimum one-to-one acreage or linear foot compensation ratios must be used."

3. Compensatory Mitigation Hierarchy

Compensatory mitigation should follow the hierarchy as outlined in 33 CFR 332.3(b)(2-6) or current regulation. This hierarchy in order of preference includes: (1) Mitigation Bank credits, (2) In-Lieu Fee program credits, (3) permittee-responsible mitigation under a watershed approach, (4) permittee-responsible mitigation through on-site and in-kind mitigation, and (5) permittee-responsible mitigation through off-site and/or out-of-kind mitigation. If the proposed mitigation deviates from this mitigation hierarchy, the applicant **must** justify in writing why the proposed mitigation is environmentally preferable to the preferred method of compensatory mitigation (See 2008 Mitigation Rule). **In order for your application to be considered complete, you must provide a statement that discusses how your project will compensate for the loss or impact to aquatic resources.** If you are proposing permittee responsible mitigation, the 12 components of a mitigation plan (33 CFR 332.4(c)(2-14) must be addressed for your application to be considered complete. Prospective applicants are encouraged to contact USACE with questions at any time. Addressing the 12 components of a mitigation plan is commensurate with the amount of compensatory mitigation required, and USACE can assist prospective applicants with the level of information needed to satisfy each component.

For activities resulting in the loss of marine or estuarine resources, permittee-responsible mitigation may be environmentally preferable if there are no mitigation banks or in-lieu fee programs in the area that have marine or estuarine credits available for sale or transfer to the permittee.

4. In-Lieu Fee (ILF)

The purchase of credits from the Massachusetts In-Lieu Fee Program (MA ILFP) is the ***preferred*** method of compensatory mitigation in Massachusetts since, as of the issuance date of this GP, there are no mitigation banks available in Massachusetts. The applicant shall develop a mitigation plan that addresses the baseline conditions at the impact site and the number of credits to be provided (see 33 CFR 332.4(c)(1)(ii)).

The MA ILFP is administered by the Massachusetts Department of Fish & Game (DFG) in accordance with the 2008 Mitigation Rule at 33 CFR 332. The Mitigation Rule governs in-lieu fee compensatory mitigation associated with USACE permits under §404 of the Clean Water Act and/or §9 or §10 of the Rivers and Harbors Act of 1899.

MA ILFP Website: https://www.mass.gov/in-lieu-fee-program

Acceptance of an ILF payment into the ILFP established by the 2014 MA ILFP Instrument (link below) is an acknowledgement by DFG that it assumes all legal responsibility for satisfying the mitigation requirements of the USACE (i.e., the implementation, performance, and long-term management and monitoring of the compensatory mitigation project(s) approved under this Instrument and subsequent Compensatory Mitigation Plans). This transfer of legal responsibility is established by: 1) the approval of this In-Lieu Fee Instrument; 2) receipt by the district engineer of a Notice of Credit Sale and Transfer of Legal Responsibility to DFG that is signed by the DFG and the permittee and dated; and 3) the transfer of fees from the permittee to DFG.

MA ILFP Fact Sheet: https://www.mass.gov/files/documents/2017/01/sj/ilfp-fact-sheet-ma-ilfp-fees.pdf

MA ILFP Instrument: https://www.mass.gov/files/documents/2016/08/nd/ilfp-final-instrument-dfg.pdf

5. Permittee-Responsible

The USACE may determine that the proposed permittee-responsible compensatory mitigation is appropriate on a case-by-case basis. As described in the Compensatory Mitigation Hierarchy section above, applicants must justify in writing why the proposed mitigation is environmentally preferable to the purchase of ILF credits. Applicants are encouraged to contact the USACE prior to submission of a permit application to seek further guidance regarding USACE mitigation requirements.

Applicants will demonstrate their proposed compensatory mitigation in writing by addressing the 12 components of a mitigation plan (33 CFR 332.4(c)(2-14). *Please note that all elements must be addressed, or the permit application will be deemed incomplete*. In certain circumstances, the district engineer may determine that prior approval of the final mitigation plan is not practicable or not necessary to ensure timely completion of the required compensatory mitigation (see 33 CFR 332.3(k)(3)). Guidance on how to address these components can be found on the New England District Mitigation webpage: https://www.nae.usace.army.mil/Missions/Regulatory/Mitigation/

Performance standards will be used to measure the successfulness of the mitigation project. A successful mitigation project is one that is self-sustaining. For a mitigation project that will restore, enhance, or create wetlands, proper performance standards must address hydrology, hydric soils, and hydrophytic vegetation. The mitigation proposal must include an explanation of quantitative methods used to measure the success of performance standards (i.e., percent cover may be measured using vegetation plots, hydrology may be measured using data loggers, soil cores may be taken and evaluated for hydric soil indicators).

Monitoring methods should include quantitative sampling methods following established, scientific protocols. Sampling documentation, as part of monitoring reports, should include maps and coordinates (also shapefiles, if available) showing locations of sampling points, transects, quadrats, etc. In addition, permanent photo stations should be established coincident with sampling locations.

SECTION VI: FEDERAL & STATE AGENCY CONTACT INFORMATION & ORGANIZATIONAL WEBSITES

Federal Agencies

U.S. Army Corps of Engineers
Regulatory Division
696 Virginia Road
Concord, Massachusetts 01742-2751
(978) 318-8338 (phone); (978) 318-8303 (fax)
www.nae.usace.army.mil/missions/regulatory

U.S. Army Corps of Engineers
Navigation Division – Section 408
696 Virginia Road
Concord, Massachusetts 01742-2751
See link below for contact information:
https://www.nae.usace.army.mil/Missions/Section-408/

National Marine Fisheries Service
55 Great Republic Drive
Gloucester, Massachusetts 01930
(978) 281-9300 (phone)
(*Federal endangered species & EFH)*

U.S. Fish & Wildlife Service
70 Commercial Street, Suite 300
Concord, New Hampshire 03301
(603) 223-2541 (phone)
(Federal endangered species)

National Park Service
15 State Street
Boston, Massachusetts 02109
(617) 223-5191 (phone)
(*Wild and Scenic Rivers*)

Bureau of Ocean and Energy Management
1849 C Street, NW
Washington D.C. 20240
202-208-6474 (phone)
(*Offshore Wind Facilities)*

Chief, Risk Analysis Branch
FEMA Region 1
99 High Street, 6th Floor
U.S. Department of Homeland Security
Boston, Massachusetts 02110
(617) 956-7576 (phone)

Commander (dpb)
First Coast Guard District
Battery Building
One South Street
New York, New York 10004-1466
(212) 514-4331 (phone); (212) 514-4337 (fax)
(*Bridge permits*)

U.S. Environmental Protection Agency
5 Post Office Square
Suite 100 (OEP06–3)
Boston, Massachusetts 02109-3912
(617) 918-1692 (phone)

State Agencies in Massachusetts

Massachusetts Department of Environmental Protection (MassDEP)	
DEP Division of Wetlands & Waterways	100 Cambridge Street, Suite 900 Boston, Massachusetts 02114 (617) 292-5695
Northeast Region	150 Presidential Way, Suite 300 Woburn, Massachusetts 01801 (978) 694-3200
Southeast Region	20 Riverside Drive, Route 105 Lakeville, Massachusetts 02347 (508) 946-2800
Central Region	8 New Bond Street Worcester, Massachusetts 01606 (508) 792-7650
Western Region	436 Dwight Street Springfield, Massachusetts 01103 (413) 784-1100

Massachusetts Office of Coastal Zone Management (CZM) Emails may be sent to: czm@mass.gov	
MA Office of Coastal Zone Management	100 Cambridge Street, Suite 900 Boston, Massachusetts 02114 (617) 626-1200
North Shore Region	2 State Fish Pier Gloucester, Massachusetts 01930 (978) 281-3972
South Shore Region	175 Edward Foster Road Scituate, Massachusetts 02066
Cape Cod and Islands Region	3195 Main Street, P.O. Box 220 Barnstable, MA 02630
South Coastal Region	81-B County Road, Suite E Mattapoisett, MA 02739

Massachusetts Historical Commission (MHC)	
Office Location:	220 Morrisey Boulevard Boston, Massachusetts 02125 (617) 727-8470

Massachusetts Board of Underwater Archaeological Resources (BUAR) Emails may be sent to: david.s.robinson@mass.gov	
Office Location:	100 Cambridge Street, Suite 900 Boston, Massachusetts 02114 (617) 626-1014

SECTION VII: Definitions & Acronyms

Artificial or Living Reef: A structure which is constructed or placed in waters for the purpose of enhancing fishery resources and commercial and recreational fishing opportunities.
Attendant Features: Occurring with or as a result of; accompanying.
Biodegradable: A material that decomposes into elements found in nature within a reasonably short period of time and will not leave a residue of plastic or a petroleum derivative in the environment after degradation. In contrast, degradable plastics break down into plastic fragments that remain in the environment after degradation. Examples of biodegradable materials include jute, sisal, cotton, straw, burlap, coconut husk fiber (coir) or excelsior. In contrast, degradable plastics break down into plastic fragments that remain in the environment after degradation. Photodegradable, UV degradable or Oxo-(bio)degradable plastics are not considered biodegradable under this GP.
Boating facilities: These provide, rent or sell mooring space, such as marinas, yacht clubs, boat yards, dockominiums, municipal facilities, land/home owners, etc. Not classified as boating facilities are piers shared between two abutting properties or municipal mooring fields that charge an equitable user fee based on the actual costs incurred.
Compensatory mitigation: The restoration (re-establishment or rehabilitation), establishment (creation), enhancement, and/or in certain circumstances preservation of aquatic resources for the purposes of offsetting unavoidable adverse impacts which remain after all appropriate and practicable avoidance and minimization has been achieved. Must comply with the applicable provisions of 33 CFR 332. See also the New England District Compensatory Mitigation Guidance at http://www.nae.usace.army.mil/Missions/Regulatory/Mitigation.aspx.
Construction mats: Constructions, swamp and timber mats (herein referred to as “construction mats”) are generic terms used to describe structures that distribute equipment weight to prevent wetland damage while facilitating passage and providing work platforms for workers and equipment. They are comprised of sheets or mats made from a variety of materials in various sizes. A timber mat consists of large timbers bolted or cabled together. Corduroy roads, which are not considered to be construction mats, are cut trees and/or saplings with the crowns and branches removed, and the trunks lined up next to one another. Corduroy roads are typically installed as permanent structures. Like construction mats, they are considered as fill whether they are installed temporarily or permanently.
Cumulative Impacts: The impact on the environment, which results from the incremental impact of the action when added to other past, present, and reasonably foreseeable future actions, regardless of what agency or person undertakes such other actions. Cumulative impacts can result from individually minor but collectively significant actions taking place over a period of time (40 CFR 1508.1). Although the impact of a particular discharge may constitute a minor change in itself, the cumulative effect of numerous such piecemeal changes can result in a major impairment of the water resources and interfere with the productivity and water quality of existing aquatic ecosystems. See 40 CFR 230.11(g).
Currently serviceable: Useable as is or with some maintenance, but not so degraded as to essentially require reconstruction.
Dredging:
Improvement Dredging: For the purposes of these GPs, this is dredging deeper than previously authorized by the USACE and dredged under that authorization.
Maintenance Dredging: For the purposes of these GPs, this is dredging from an area previously authorized by the USACE and dredged under that authorization. The USACE may require proof of authorization and dredging. Maintenance dredging typically refers to the routine removal of accumulated sediment to maintain the design depths of serviceable navigation channels, harbors, marinas, boat launches and port facilities. Maintenance dredging is conducted for navigational purposes and does not include any expansion of the previously dredged area. The USACE may

review a maintenance dredging activity as new dredging if sufficient time has elapsed to allow for the colonization of SAS, shellfish, etc.

New Dredging: For the purposes of these GPs, this is a) first time the USACE authorizes dredging of a particular location or b) dredging has not occurred for an extended period of time, and this has allowed for aquatic resources (i.e., eelgrass, shellfish, etc.) to redevelop in the area.

Dredged material & discharge of dredged material: These are defined at 33 CFR 323.2(c) and (d). The term dredged material means material that is excavated or dredged from waters of the U.S.

Enhancement: The manipulation of the physical, chemical, or biological characteristics of an aquatic resource to heighten, intensify, or improve a specific aquatic resource function(s). Enhancement results in the gain of selected aquatic resource function(s) but may also lead to a decline in other aquatic resource function(s). Enhancement does not result in a gain in aquatic resource area.

Ephemeral stream: A stream with flowing water only during, and for a short duration, after precipitation events in a typical year. Ephemeral stream beds are located above the water table year-round. Groundwater is not a source of water for the stream. Runoff from rainfall is the primary source of water for stream flow.

Erosion Controls: Appropriate soil erosion, sediment and turbidity controls include cofferdams, bypass pumping around barriers immediately up and downstream of the work footprint (i.e., dam and pump), installation of sediment control barriers (i.e., silt fence, vegetated filter strips, geotextile silt fences, filter tubes, erosion control mixes, hay bales or other devices) downhill of all exposed areas, stream fords, retention of existing vegetated buffers, application of temporary mulching during construction, phased construction, and permanent seeding and stabilization, etc.

Establishment (creation): The manipulation of the physical, chemical, or biological characteristics present to develop an aquatic resource that did not previously exist at an upland site. Establishment results in a gain in aquatic resource area (33 CFR 332.2).

Expansions: Work that increases the footprint of fill, structures, depth of basin or drainage features, or floats, or slip capacity.

Essential Fish Habitat (EFH): The Federal Magnuson-Stevens Fishery Management and Conservation Act broadly defines EFH to include those waters and substrate necessary to fish for spawning, breeding, feeding, or growth to maturity. See www.greateratlantic.fisheries.noaa.gov/habitat for more information.

Fill material & discharge of fill material: Material placed in waters of the U.S. where the material has the effect of either replacing any portion of a water of the U.S. with dry land or changing the bottom elevation of any portion of a water of the U.S. Fill material does not include any pollutant discharged into the water primarily to dispose of waste. These are defined at 33 CFR 323.2 (e) & (f).

Federal navigation projects (FNPs): These areas are maintained by the USACE; authorized, constructed and maintained on the premise that they will be accessible and available to all on equal terms; and comprised of USACE Federal anchorages, Federal channels and Federal turning basins. The buffer zone is equal to three times the authorized depth of a FNP. The following are FNPs in MA and more information, including the limits, is provided at www.nae.usace.army.mil/missions/navigation >> Navigation Projects:

- Andrews River, Harwich, MA
- Aunt Lydia's Cove
- Beverly Harbor
- Boston Harbor
- Buttermilk Bay Channel
- Canapitsit Channel
- Cape Cod Canal
- Chatham Harbor
- Cohasset Harbor
- Cross Rip Shoals, Nantucket Sound
- Cuttyhunk Harbor
- Dorchester Bay and Neponset River
- Duxbury Harbor
- Edgartown Harbor
- Essex River
- Fall River Harbor
- Falmouth Harbor
- Gloucester Harbor and Annisquam River
- Green Harbor
- Hingham Harbor
- Hyannis Harbor
- Ipswich River
- Island End River (Chelsea, MA)
- Kingston Harbor
- Lagoon Pond
- Little Harbor Woods Hole

Lynn Harbor
Malden River
Menemsha Creek
Merrimack River
Mystic River
Nantucket Harbor of Refuge
New Bedford and Fairhaven Harbor
Newburyport Harbor
Oak Bluffs Harbor
Pigeon Cove Harbor
Plymouth Harbor
Pollock Rip Shoals, Nantucket Sound
Provincetown Harbor
Red Brook Harbor
Rockport Harbor
Salem Harbor
Sandy Bay Harbor of Refuge
Saugus River
Scituate Harbor
Sesuit Harbor
Taunton River
Vineyard Haven Harbor
Wareham Harbor
Wellfleet Harbor
Westport River and Harbor
Weymouth Back River
Weymouth Fore and Town Rivers
Winthrop Harbor
Woods Hole Channel

Flume: An open artificial water channel, in the form of a gravity chute, which leads water from a diversion dam or weir alongside a natural flow. A flume can be used to measure the rate of flow.
FNP buffer zone: The buffer zone of a USACE Federal Navigation Project (FNP) is equal to three times the authorized depth of the FNP.
Frac out: During horizontal directional drilling (HDD) operations, drilling fluid travels up the borehole into a pit. When the borehole becomes obstructed or the pressure becomes too great inside the borehole, the ground fractures and fluid escapes to the surface and may affect surface waters.
Ground disturbance: Any activity that compacts, relocates, overturns, removes, mixes, or otherwise disturbs the ground, including under water. Ground disturbance can be caused by the use of hand tools (shovels, pick axe, posthole digger, etc.), heavy equipment (excavators, backhoes, bulldozers, dredgers, trenching and earthmoving equipment, etc.), and heavy trucks (large four wheel drive trucks, dump trucks and tractor trailers, etc.). Trenching, bulldozing, dredging, excavating, scraping, and plowing are typical examples of ground disturbance activities.
Height:width ratio: The height of structures shall at all points be equal to or exceed the width of the deck. For the purpose of this definition, height shall be measured from the marsh substrate to the bottom of the longitudinal support beam.
High Tide Line (HTL): The line of intersection of the land with the water's surface at the maximum height reached by a rising tide. The high tide line may be determined, in the absence of actual data, by a line of oil or scum along shore objects, a more or less continuous deposit of fine shell or debris on the foreshore or berm, other physical markings or characteristics, vegetation lines, tidal gages, or other suitable means that delineate the general height reached by a rising tide. The line encompasses spring high tides and other high tides 58 that occur with periodic frequency but does not include storm surges in which there is a departure from the normal or predicted reach of the tide due to the piling up of water against a coast by strong winds. (33 CFR 328). Refer to the highest predicted tide for the current year at the nearest NOAA tide gage. https://tidesandcurrents.noaa.gov/map/index.html
Historic Property: Any prehistoric or historic site (including archaeological sites), district, building, structure, or other object included in, or eligible for inclusion in, the National Register of Historic Places maintained by the Secretary of the Interior. This term includes artifacts, records, and remains that are related to and located within such properties. The term includes properties of traditional religious and cultural importance to an Indian tribe or Native Hawaiian organization and that meet the National Register criteria (36 CFR part 60).
Impacts:
Direct Impacts: Effects that are caused by the activity and occur at the same time and place (40 CFR 1508.7).
Indirect impacts: Effects that are caused by the activity and are later in time or farther removed in distance, but are still reasonably foreseeable.
Secondary impacts: Effects on an aquatic ecosystem that are associated with a discharge of dredged or fill materials, but do not result from the actual placement of the dredged or fill material.

Information about secondary effects on aquatic ecosystems shall be considered prior to the time final section 404 action is taken by permitting authorities. Some examples of secondary effects on an aquatic ecosystem are: aquatic areas drained, flooded, fragmented; fluctuating water levels in an impoundment and downstream associated with the operation of a dam; septic tank leaching and surface runoff from residential or commercial developments on fill; and leachate and runoff from a sanitary landfill located in waters of the U.S. See 40 CFR 230.11(h).

Incidental Fallback: Incidental fallback is the redeposit of small volumes of dredged material that is incidental to excavation activity in waters of the U.S. when such material falls back to substantially the same place as the initial removal (33 CFR 323.2(d)(2)(iii)).

In the dry: Work that is done under dry conditions, e.g., work behind cofferdams or when the stream or tide is waterward of the work.

Independent utility: A test to determine what constitutes a single and complete non-linear project in the USACE Regulatory Program. A project is considered to have independent utility if it would be constructed absent the construction of other projects in the project area. Portions of a multi-phase project that depend upon other phases of the project do not have independent utility. Phases of a project that would be constructed even if the other phases were not built can be considered as separate single and complete projects with independent utility.

Individual permit: A Department of the Army authorization that is issued following a case-by-case evaluation of a specific structure or work in accordance with the procedures of 33 CFR 322, or a specific project involving the proposed discharge(s) in accordance with the procedures of 33 CFR 323, and in accordance with the procedures of 33 CFR 325 and a determination that the proposed discharge is in the public interest pursuant to 33 CFR 320.

Intermittent stream: An intermittent stream has flowing water during certain times of the year, when groundwater provides water for stream flow. During dry periods, intermittent streams may not have flowing water. Runoff from rainfall is a supplemental source of water for stream flow.

Intertidal: The area in between mean low water and the high tide line.

Living reef: See the definition of “artificial or living reef.”

Living shoreline: A term used to describe a low-impact approach with a substantial biological component to shoreline protection and restoration along coastal shores, riparian zones, lacustrine fringe wetlands, or oyster or mussel reef structures. This approach integrates natural features to restore, enhance, maintain, or create habitat, functions, and processes while also functioning to mitigate flooding or shoreline erosion. Living shorelines may stabilize banks and shores with small fetch and gentle slopes that are subject to low-to mid-energy waves. A living shoreline has a footprint that is made up mostly of native material. It incorporates vegetation or other living, natural “soft” elements alone or in combination with some type of harder shoreline structure (e.g., oyster or mussel reefs or rock sills) for added protection and stability. Living shorelines should maintain the natural continuity of the land-water interface and retain or enhance shoreline ecological processes.

Loss of waters of the United States: Waters of the U.S. that are permanently adversely affected by filling, flooding, excavation, or drainage because of the regulated activity. The loss of stream bed includes the acres of stream bed that are permanently adversely affected by filling or excavation because of the regulated activity. Permanent adverse effects include permanent discharges of dredged or fill material that change an aquatic area to dry land, increase the bottom elevation of a waterbody, or change the use of a waterbody. The acreage of loss of waters of the U.S. is a threshold measurement of the impact to jurisdictional waters or wetlands for determining whether a project may qualify for a GP; it is not a net threshold that is calculated after considering compensatory mitigation that maybe used to offset losses of aquatic functions and services. Waters of the U.S. temporarily filled, flooded, excavated, or drained, but restored to pre-construction contours and elevations after construction, are not included in the measurement of loss of waters of the U.S. Impacts resulting from activities that do not require Department of the Army authorization, such as activities eligible for exemptions under section 404(f) of the Clean Water Act, are not considered when calculating the loss of waters of the U.S.

Maintenance: The repair, rehabilitation, or in-kind replacement of any previously authorized, currently serviceable structure or fill, or of any currently serviceable structure or fill authorized by 33 CFR 330.3 – "Activities occurring before certain dates," provided that the structure or fill is not to be put to uses differing from those uses specified or contemplated for it in the original permit or the most recently authorized modification. Maintenance includes minor deviations in the structure's configuration or filled area, including those due to changes in materials, construction techniques, or current construction codes or safety standards that are necessary to make repair, rehabilitation, or replacement are authorized. Currently serviceable means useable as is or with some maintenance, but not so degraded as to essentially require reconstruction.

Maintenance Exemption: In accordance with 33 CFR 323.4(a)(2), any discharge of dredged or fill material that may result from any of the following activities is not prohibited by or otherwise subject to regulation under Section 404 of the CWA: "Maintenance, including emergency reconstruction of recently damaged parts, of currently serviceable structures such as dikes, dams, levees, groins, riprap, breakwaters, causeways, bridge abutments or approaches, and transportation structures. Maintenance does not include any modification that changes the character, scope, or size of the original fill design."

Mean high water: Line on the shore reached by the plane of the average high water. Where precise determination of the actual location of the line becomes necessary, it must be established by survey with reference to the available tidal datum, preferably averaged over a period of 18.6 years. Less precise methods, such as observation of the "apparent shoreline" which is determined by reference to physical markings, lines of vegetation, or changes in type of vegetation, may be used only where an estimate is needed of the line reached by the mean high water.

Mechanized land clearing: Land clearing activities using mechanized equipment such as backhoes or bulldozers with sheer blades, rakes or discs constitute point source discharges and are subject to section 404 jurisdiction when they take place in wetlands or waters of the U.S (Regulatory Guidance Letter 90-05).

Metallic mineral: Any ore or material to be excavated from the natural deposits on or in the earth for its metallic mineral content to be used for commercial or industrial purposes. "Metallic mineral" does not include thorium or uranium.

Minor deviations: Deviations in the structure's configuration or filled area, including those due to changes in materials, construction techniques, or current construction codes or safety standards, which are necessary to make repair, rehabilitation, or replacement are permitted, provided the adverse environmental effects resulting from such repair, rehabilitation, or replacement are minimal.

Natural Rocky Habitats: Intertidal and subtidal substrates of pebble-gravel, cobble, boulder, or rock ledge and outcrops. Manufactured stone (e.g., cur or engineered riprap) is not considered a natural rocky habitat. Natural rocky habitats are either found as pavement (consolidated pebble-gravel, cobble, or boulder areas) or as a mixture with fines (i.e., clay and sand) and other substrates. Rocky habitats as EFH are defined as follows: (1) All pebble-gravel, cobble, or boulder pavements; (2) Pebble-gravel mixed with fines: mixed substrate of pebble-gravel and fines where pebble-gravel is an evident component of the substrate (either through visual observation or within sediment samples). Sediment samples with a content of 10% or more of pebble-gravel in the top layer (6-12 inches) should be delineated; (3) Scattered cobble, scattered boulder, scattered cobble/boulder: mixed substate of cobble and/or boulder and other substrates. The aerial extent of cobbles and/or boulders should be delineated; and (4) All rock ledge outcrops: area should be delineated along the edge of the ledge/outcrop (as defined by NMFS Habitat and Ecosystems Services Branch, Gloucester, MA).

Navigable waters or Navigable waters of the U.S.: These waters are subject to section 10 of the Rivers and Harbors Act of 1899 and are defined as those waters that are subject to the ebb and flow of the tide and/or are presently used, or have been used in the past, or may be susceptible for use to transport interstate or foreign commerce (33 CFR Part 329). Work or structures in navigable

waters require permits pursuant to §9 and §10 of the Rivers and Harbors Act of 1899. Also see the definition of "waters of the U.S." below.
Note: Currently the following non-tidal waters have been determined to be navigable waters of the U.S. subject to permit jurisdiction in Massachusetts: Merrimack River, Connecticut River, and Charles River to the Watertown Dam.
Nearshore disposal: This is defined in the USACE Coastal Engineering Manual as "(1) In beach terminology an indefinite zone extending seaward from the shoreline well beyond the breaker zone. (2) The zone which extends from the swash zone to the position marking the start of the offshore zone, typically at water depths of the order of 20m." A nearshore berm is an artificial berm built in shallow water using dredged material. Often, the berm is intended to renourish the adjacent and downdrift shore over time under the influence of waves and currents.
Non-regulated activity: Only structures or fills that were previously authorized and are in compliance with the terms and condition of the original authorization can be maintained as a non-regulated activity under 33 CFR 323.4(a)(2). Minor deviations from the previously authorized footprint do not qualify as a non-regulated activity and require new authorization from the USACE. The state's maintenance provisions may differ from the USACE and a project may require reporting and written authorization from the state.
Non-tidal wetlands: A non-tidal wetland is a wetland that is not subject to the ebb and flow of tidal waters. Non-tidal wetlands contiguous to tidal waters are located landward of the HTL (*i.e.,* spring HTL). Also see the definition of "Waters of the U.S." below.
Oil or natural gas pipeline: Any pipe or pipeline for the transportation of any form of oil or natural gas, including products derived from oil or natural gas, such as gasoline, jet fuel, diesel fuel. heating oil, petrochemical feedstocks, waxes, lubricating oils, and asphalt.
Ordinary High Water Mark (OHWM): A line on the shore established by the fluctuations of water and indicated by physical characteristics, or by other appropriate means that consider the characteristics of the surrounding areas. See 33 CFR 328.3(e).
Overall project: The overall project, for purposes of these GPs, includes all regulated activities that are reasonably related and necessary to accomplish the project purpose. Also see the definition of "single and complete linear project."
Perennial stream: A perennial stream has flowing water year-round during a typical year. The water table is located above the stream bed for most of the year. Groundwater is the primary source of water for stream flow. Runoff from rainfall is a supplemental source of water for stream flow.
Practicable: Available and capable of being done after taking into consideration cost, existing technology, and logistics in light of overall project purposes.
Permanent impacts: Permanent impacts means waters of the U.S. that are permanently affected by filling, flooding, excavation, or drainage because of the regulated activity. Permanent impacts include permanent discharges of dredged or fill material that change an aquatic area to dry land, increase the bottom elevation of a waterbody, or change the use of a waterbody.
Preconstruction notification (PCN): A request submitted by the applicant to the USACE for confirmation that a particular activity is authorized by these GPs. The request may be a permit application, letter, or similar document that includes information about the proposed work and its anticipated environmental effects. Preconstruction notification may be required by the terms and conditions of these GPs. A PCN may be voluntarily submitted in cases where PCN is not required and the applicant wants confirmation that the activity is authorized under these GPs.
Preservation: The removal of a threat to, or preventing the decline of, aquatic resources by an action in or near those aquatic resources. This term includes activities commonly associated with the protection and maintenance of aquatic resources through the implementation of appropriate legal and physical mechanisms. Preservation does not result in a gain of aquatic resource area or functions (33 CFR 332.2).
Real estate subdivision: Includes circumstances where a landowner or developer divides a tract of land into smaller parcels for the purpose of selling, conveying, transferring, leasing, or

developing said parcels. This would include the entire area of a residential, commercial or other real estate subdivision, including all parcels and parts thereof

Reconfiguration zone: A USACE authorized area in which permittees may rearrange pile-supported structures and floats without additional authorizations. A reconfiguration zone does not grant exclusive privileges to an area or an increase in structure or float area.

Re-establishment: The manipulation of the physical, chemical, or biological characteristics of a site with the goal of returning natural/ historic functions to a former aquatic resource. Re-establishment results in rebuilding a former aquatic resource and results in again in aquatic resource area and functions (33 CFR 332.2).

Reference Site: Reference sites - Compensatory restoration, rehabilitation, and creation mitigation projects should seek to duplicate the features of reference aquatic resources or enhance connectivity with adjacent natural upland and aquatic resource landscape elements. Performance standards related to reference sites are encouraged. Mitigation project sites must be selected based on their ability to be, and continue to be, resistant to disturbance from the surrounding landscape, by locating them adjacent to refuges, buffers, green spaces, and other preserved natural elements of the landscape. In general, aquatic resource mitigation projects must be designed to be self-sustaining, natural systems within the landscape and climate in which they are located, with little or no ongoing maintenance and/or hydrologic manipulation.

Rehabilitation: The manipulation of the physical, chemical, or biological characteristics of a site with the goal of repairing natural/historic functions to a degraded aquatic resource. Rehabilitation results in a gain in aquatic resource function, but does not result in a gain in aquatic resource area (33 CFR 332.2).

Restoration: The manipulation of the physical, chemical, or biological characteristics of a site with the goal of returning natural/historic functions to a former or degraded aquatic resource. For the purpose of tracking net gains in aquatic resource area, restoration is divided into two categories: re-establishment and rehabilitation (33 CFR 332.2).

Riffle and pool complex: Riffle and pool complexes are special aquatic sites under the 404(b)(1) Guidelines. Riffle and pool complexes sometimes characterize steep gradient sections of streams. Such stream sections are recognizable by their hydraulic characteristics. The rapid movement of water over a course substrate in riffles results in a rough flow, a turbulent surface, and high dissolved oxygen levels in the water. Pools are deeper areas associated with riffles. A slower stream velocity, a streaming flow, a smooth surface, and a finer substrate characterize pools.

Sedimentation: Sedimentation is defined as the process of deposition of a solid material from a state of suspension. Deposited sediments may accumulate and have temporal impacts to aquatic resource areas. See secondary effects definition above. For the purposes of this document, “greater than minimal sedimentation” is generally not considered to occur when using proper erosion controls (GC 25) or when sedimentation is considered “de minimis” 33 CFR 323.2(d)(5).

Single and complete linear project: A linear project is a project constructed for the purpose of getting people, goods, or services from a point of origin to a terminal point, which often involves multiple crossings of one or more waterbodies at separate and distant locations. The term “single and complete project” is defined as that portion of the total linear project proposed or accomplished by one owner/ developer or partnership or other association of owners/developers that includes all crossings of a single water of the U.S. (i.e., a single waterbody) at a specific location. For linear projects crossing a single or multiple waterbodies several times at separate and distant locations, each crossing is considered a single and complete project for the purposes of these GPs. However, individual channels in a braided stream or river, or individual arms of a large, irregularly shaped wetland or lake, etc., are not separate waterbodies, and crossings of such features cannot be considered separately.

Single and complete non-linear project: For non-linear projects, the term “single and complete project” is defined at 33 CFR 330.2(i) as the total project proposed or accomplished by one owner/developer or partnership or other association of owners/developers. A single and complete

non-linear project must have independent utility (see the definition of “independent utility”). Single and complete non-linear projects may not be “piecemealed” to avoid the limits in a GP authorization.

Special aquatic sites (SAS): These include inland and saltmarsh wetlands, mud flats, vegetated shallows, sanctuaries and refuges, coral reefs, and riffle and pool complexes. These are defined at 40 CFR 230.3 and listed in 40 CFR 230 Subpart E.

Streambed: The stream substrate between the OHW marks on each side. The substrate may be bedrock or inorganic particles that range in size from clay to boulders. Wetlands contiguous to the streambed, but outside of the OHW marks, are not considered part of the streambed.

Stream channelization: The manipulation of a stream’s course, condition, capacity, or location that causes more than minimal interruption of normal stream processes. A channelized stream remains a water of the U.S.

Structure: An object that is arranged in a definite pattern of organization. Examples of structures include, without limitation, any pier, boat dock, boat ramp, wharf, dolphin, weir, boom, breakwater, bulkhead, revetment, riprap, jetty, artificial island, artificial reef, permanent mooring structure, power transmission line, permanently moored floating vessel, piling, aid to navigation, or any other manmade obstacle or obstruction.

Temporal loss: The time lag between the loss of aquatic resource functions caused by the permitted impacts and the replacement of aquatic resource functions at the compensatory mitigation site(s) (33 CFR 332.2).

Temporary impacts: Temporary impacts include, but are not limited to, jurisdictional waters that are temporarily filled, flooded, excavated, or drained because of the regulated activity. Impacts are considered temporary when they are removed immediately upon completion of the activity. Note: An impact is considered temporary when the aquatic resource is restored to pre-project conditions, but effects to archaeological and/or cultural resources may be permanent in duration.

Tidal wetlands: A wetland that is subject to the ebb and flow of the tide. See the definition of “Waters of the U.S.” below.

Tide gates: Structures such as duckbills, flap gates, manual and self-regulating tide gates, etc. that regulate or prevent upstream tidal flows.

Turbidity: A measure of the level of particles such as sediment, plankton, or organic by-products, in a body of water. As the turbidity of water increases, it becomes denser and less clear due to a higher concentration of these light-blocking particles. Suspended solids are more likely to carry toxic chemicals, and can also negatively affect aquatic organisms, water temperature, and dissolved oxygen levels.

Utility line: Any pipe or pipeline for the transportation of any gaseous, liquid, liquescent, or slurry substance, for any purpose that is not oil, natural gas, or petrochemicals. A utility line also includes any cable, line, or wire for the transmission for any purpose of electrical energy, telephone, and telegraph messages, and radio and television communication. The term ‘utility line’ does not include activities that drain a water of the U.S., such as drainage tile or French drains, but it does apply to pipes conveying drainage from another area.

Vegetated shallows: Permanently inundated areas that under normal circumstances support communities of rooted aquatic vegetation, such as eelgrass *(Zostera marina)* and widgeon grass (*Rupia maritima*) in marine systems (does not include salt marsh) as well as a number of freshwater species in rivers and lakes. These are a type of SAS defined at 40 CFR 230.43. Vegetated shallows are commonly referred to as submerged aquatic vegetation or SAV. Vegetated shallow survey guidance is located at www.nae.usace.army.mil/missions/regulatory /jurisdiction-and-wetlands. Maps of vegetated shallows in Massachusetts are located at www.nae.usace.army.mil/missions/regulatory/state-general-permits/massachusetts-general-permit.

Vernal pools: For the purposes of these GPs, vernal pools are depressional wetland basins that typically dry up in most years and may contain inlets or outlets, typically of intermittent flow. Vernal pools range in both size and depth depending upon landscape position and parent material(s). In

most years, vernal pools support one or more of the following obligate indicator species: wood frog, spotted salamander, blue-spotted salamander, marbled salamander, Jefferson's salamander and fairy shrimp. However, they should preclude sustainable populations of predatory fish.

Water diversions: Water diversions are activities such as bypass pumping (e.g., "dam and pump") or water withdrawals. Temporary flume pipes, culverts or cofferdams where normal flows are maintained within the stream boundary's confines aren't water diversions. "Normal flows" are defined as no change in flow from pre-project conditions.

Waters of the United States (U.S.) These waterbodies are the waters where permits are required for the discharge of dredged or fill material pursuant to §404 of the CWA. These waters include but are not limited to navigable waters of the U.S. and tidal wetlands and include many non-tidal wetlands and other waterbodies. See definitions for navigable waters of the U.S., tidal wetlands, waterbody, and non-tidal wetlands. (33 CFR 328)

Waterbody: Examples of "waterbodies" include oceans, coastal waters, rivers, streams, ditches, lakes, ponds, and wetlands. If a wetland is adjacent to a waterbody determined to be a water of the U.S., that waterbody and any adjacent wetlands are considered together as a single aquatic unit (see 33 CFR 328.4(c)(2)).

Weir: A barrier across a river designed to alter the flow characteristics. In most cases, weirs take the form of a barrier, smaller than most conventional dams, across a river that causes water to pool behind the structure and allows water to flow over the top. Weirs are commonly used to alter the flow regime of a river, prevent flooding, measure discharge and help render a river navigable.

Wetland: Wetlands are areas that are inundated or saturated by surface or ground water at a frequency and duration sufficient to support, and that under normal circumstances do support, a prevalence of vegetation typically adapted for life in saturated soil conditions. Wetlands generally include swamps, marshes, bogs, and similar areas. The Corps of Engineers Wetlands Delineation Manual in conjunction with the associated regional supplement should be used to determine if a wetland is present and delineate wetland boundaries.

Acronyms

BMPs	Best Management Practices
BUAR	Massachusetts Board of Underwater Archaeological Resources
CWA	Clean Water Act
CZM	Coastal Zone Management
EPA	U.S. Environmental Protection Agency
ESA	Endangered Species Act
EFH	Essential Fish Habitat
FNP	Federal Navigation Project
GC	General Condition
GP	General Permit
HTL	High Tide Line
IP	Individual Permit
LID	Low impact development
MassDEP	Massachusetts Department of Environmental Protection
MA DMF	Massachusetts Division of Marine Fisheries
MHC	Massachusetts Historical Commission
MHW	Mean High Water
MLLW	Mean Lower Low Water
MLW	Mean Low Water
NHPA	National Historic Preservation Act
NMFS	National Marine Fisheries Service
OHW	Ordinary High Water Mark
PCN	Preconstruction Notification
SAS	Special Aquatic Sites
SF	Square Feet
SV	Self-Verification
SHPO	State Historic Preservation Officer
THPO	Tribal Historic Preservation Officer
USFWS	U.S. Fish and Wildlife Service
USCG	U.S. Coast Guard
USFS	U.S. Forest Service
USGS	U.S. Geological Service
WQC	Water Quality Certification

Appendix A: Guidance for NHPA Section 106 Compliance in Massachusetts

1. Purpose & Applicability

Section 106 of the National Historic Preservation Act of 1966, as amended (NHPA) (54 U.S.C § 306108), requires Federal agencies to take into account the effects of their undertakings on Historic Properties and afford the Advisory Council on Historic Preservation a reasonable opportunity to comment on such undertakings. Therefore, in order for an activity to be eligible for authorization under the 2023 Massachusetts General Permit, the USACE must consider the effect the activity may have on historic properties. Historic properties may include, but are not limited to, historic districts, archaeological districts, sites, buildings, structures, objects, sacred sites, traditional cultural places, and traditional cultural landscapes that are included in, or eligible for inclusion in, the National Register of Historic Places (NRHP).

This guidance applies to projects that require authorization under Section 404 of the Clean Water Act (33 U.S.C. § 1344) and/or Section 10 of the Rivers and Harbors Act (33 U.S.C. §403) and will assist applicants when evaluating and documenting the presence of historic properties within or near their project site(s). The prospective applicant will evaluate their proposed project using the criteria below to determine if their project has the potential to affect historic properties and if so, whether or not historic properties are present or are likely to be present. All activities authorized under these GPs shall follow the terms outlined in General Condition 14: Historic Properties and General Condition 6: Tribal Rights & Burial Sites. Prospective applicants shall complete their due diligence according to the procedures below for their application to be deemed complete.

2. No Potential to Affect Historic Properties

Certain activities do not have the potential to cause effects on historic properties, assuming such historic properties were present, based on the nature of the activity and site-specific conditions. Therefore, these activities **do not** require historic property identification efforts or notification of the SHPO, THPOs, and/or BUAR under Section 106. The USACE has determined the following activities within the stated parameters have no potential to affect historic properties:

General Permit	Activity Parameters
1	Temporary buoys, markers and similar structures that are placed during winter events on ice and removed before spring thaw.
2	Repair or rehabilitation of structures that are less than 45 years in age. Any temporary structures or fills or work necessary to complete repairs or rehabilitation must not result in any ground disturbance.
3	Maintenance and replacement of moorings that are less than 45 years in age.
6	Maintenance, repair, replacement, or removal of utility lines, oil or natural gas pipelines, outfall or intake structures, and/or appurtenant features that are less than 45 years in age when all access, staging, and ground disturbance is strictly limited to previously disturbed areas (including any previous ground disturbance). Replacement must be in kind or smaller in size. Installation of tide gates on outfall structures that are less than 45 years in age.
7	Maintenance dredging of previously dredged areas where dredging does not extend beyond the original bottom elevations.

	Disposal of dredged material at an existing established and USACE-approved confined aquatic disposal cell. Beach nourishment in ongoing existing nourishment areas.
11	Fish and wildlife harvesting and attraction devices and activities.
13	Cleanup of hazardous and toxic waste materials, including contaminated sediments, that are less than 45 years in age.
16	Removal of land-based and water-based renewable energy generation facilities and hydropower projects that are less than 45 years in age.
18	Installation of buoys, floats, racks, trays, nets, lines, tubes, containers, and other structures for previously authorized by the USACE and ongoing aquaculture activities. Discharges of dredged or fill material into tidal or non-tidal waters necessary for shellfish seeding, rearing, cultivating, transplanting, and harvesting activities for previously authorized and ongoing aquaculture activities.
20	Maintenance activities for existing living shorelines excluding maintenance activities that require new ground disturbance such as excavation or re-sloping of the bank/shoreline.
22	Reshaping or maintenance of existing drainage ditches less than 45 years in age excluding ditch enlargement.
23	Placement of temporary and removable linear transportation and wetland/stream crossings that have no ground disturbance prior to placement, during placement, and during removal (i.e., placed on the surface and subsequently removed within one year of placement).
24	Placement of temporary and removable crossings and cofferdams that have no ground disturbance prior to placement, during placement, and during removal (i.e., placed on the surface and subsequently removed within one year of placement).
25	Emergency repair of existing structures and/or fills less than 45 years in age.

3. Historic Property Identification

If the activity does not fit under the criteria above, the following historic property identification efforts must be completed to demonstrate compliance with Section 106 of the NHPA. This includes documenting previously identified and unidentified historic properties in the project area.

a. Previously Identified Historic Properties: The prospective applicant shall document if previously identified historic properties are present on or adjacent to the project site by notifying the Massachusetts Historical Commission (MHC) and the Massachusetts Board of Underwater Archaeological Resources (BUAR), as appropriate, of the proposed project. The MHC and BUAR will check their records for the presence of any previously identified historic properties. The following outlines how prospective applicants should notify the MHC and BUAR.

i. The prospective applicant will notify the SHPO and BUAR to identify any previously recorded cultural resources. Applicants shall mail a completed Project Notification Form[18], project narrative, location (coordinates), plans, soil maps, and information on known cultural resources to the MHC. The MHC does not accept submissions via email. Applicants shall email or mail this information to the BUAR when the activity is located in lakes, ponds, rivers, and/or navigable waters in MA. Emailed file attachments should be <10MB. Any files >10MB shall be delivered via a file exchange system or the hard copy documents shall be mailed. Preferred contact information is listed below.

ii. **When sending this information, applicants must also document proof of receipt OR proof the information was delivered.** Proof of receipt constitutes a certified mail receipt, read email receipt, or other mail/email/online tracking services that document the information has reached the intended recipient(s). Proof the information was delivered constitutes a certificate of mailing, email delivery receipt, or other mail/email/online services that document the information was sent at a particular time. When using proof of delivery such (e.g., certificate of mailing), applicants should add 5 days to the 30-day notification period so the mail has time to reach its intended recipient. When using proof of receipt, the applicant may begin the 30-day notification period from the date received by the intended recipient.

iii. When mailing or emailing the application materials, applicants should include the following statement: "Please send responses to this notification directly to the USACE via email: cenae-r-ma@usace.army.mil or address regular mail responses to: Regulatory Division, U.S. Army Corps of Engineers, New England District, 696 Virginia Road, Concord, Massachusetts 01742-2751." Email responses to the USACE are strongly preferred. The SHPO and BUAR will contact the USACE and cc the applicant(s) within 30 days of receiving the notification if their records indicate that historic properties are located in the project vicinity, and if additional review and/or surveys are recommended to ensure NHPA compliance. If the SHPO and/or BUAR do not respond within 30 days of receiving the notification, is it presumed that no known historic properties are present.

b. Previously Unidentified Historic Properties: The prospective applicant shall evaluate the project site and determine the sensitivity for the presence of historic properties if the project site has not been previously surveyed for cultural resources within the last 10 years. If the sensitivity is determined to be moderate to high, an intensive archaeological and/or architectural survey is required to investigate the potential presence of historic properties. The individual conducting this survey must meet the Secretary of the Interior's Standards for Professional Qualifications (48 FR 44738-44739) in the discipline relevant to a particular resource type. For example, archeologists should not document and evaluate buildings or structures and architectural historians should not document and evaluate archaeological sites. The identification and qualifications for those participating in any survey and evaluation of resources should be included with the survey results. The criteria listed below are indicators of low sensitivity for the presence of historic properties for consideration when determining if an archaeological or architectural survey is needed.

Low sensitivity indicators:

- Previous archaeological and/or architectural survey within the last 10 years with negative results.
- In a location created in modern times (i.e., built on fill placed within the last 45 years or within an area excavated within the last 45 years).
- USACE has reviewed the project description and determined that a survey is not warranted based on the proposed activity and its location.

State survey guidance and standards are provided in the September 1995 Historic Properties Survey Manual Guidelines for the Identification of Historical and Archaeological Resources in Massachusetts available. State survey guidance and standards for underwater surveys are provided

[18] https://www.sec.state.ma.us/mhc/mhcform/formidx.htm

in the Board of Underwater Archaeological Resources' 2022 Policy Guidance on Archaeological Investigations and Related Survey Standards for the Discovery of Underwater Archaeological Resources. This guidance is available on the NAE Regulatory website: https://www.nae.usace.army.mil/Missions/Regulatory/State-General-Permits/Massachusetts-General-Permit/.

Please note, a negative result from MHC and/or BUAR does not necessarily mean no historic properties are present. Often proposed project sites have not been previously subject to a survey, so historic properties which may be present have not been previously recorded.

4. Tribal Coordination

Prospective applicants shall mail the Project Notification Form, project narrative, location (coordinates), plans with locus map, soil maps, and information on cultural resources to the Wampanoag Tribe of Gay Head (Aquinnah), Mashpee Wampanoag Tribe, Narragansett Indian Tribe, and/or Stockbridge-Munsee Community Band of Mohican Indians with interests in the project location. Preferred tribal contact information, including their respective areas of interest, can be found below. Applicants shall follow the same procedures as identified in Section 3(a)i-iii above when notifying Tribes of the proposed activity. Applicants shall provide the USACE with any responses received from the tribe(s) with their PCN application. If a tribe does not respond within 30 days of receiving the notification, the applicant shall provide USACE with all documentation of tribal outreach with their SV or PCN submission (e.g., emails, letters, phone call log, etc.). If the tribe indicates the presence of a previously unrecorded cultural resource, including a traditional cultural property (TCP) or traditional cultural landscape (TCL), a PCN is required.

5. Effect Determination

The project may have the potential to affect historic properties and/or tribal resources if 1) notification recipients respond within 30 calendar days of notification with concerns, 2) historic properties eligible for listing, or potentially eligible for listing in the NRHP, are present or 3) tribal resources are known to be present. The USACE may need to further review the project to confirm potential effects to historic properties and/or tribal resources. A PCN is required for any activity that may affect a historic property.

The USACE may determine the project will have 'no effect' on historic properties (i.e., no historic properties affected) when procedures outlined in Section 3 above are followed and no cultural resources are identified. Similarly, if historic properties are identified and will be completely avoided, the USACE may determine 'no effect.'

6. Contact Information:

Massachusetts Historical Commission

The Massachusetts Archives Building
220 Morrissey Boulevard
Boston, Massachusetts 02125

No email. Applicants or their representatives must send project information via certified mail and submit the certified mail receipt to the USACE or send via regular mail and submit proof of delivery.

Area of concern: All of Massachusetts.

Massachusetts Board of Underwater Archaeological Resources (BUAR)

100 Cambridge Street, Suite 900
Boston, Massachusetts 02114
Email: david.s.robinson@mass.gov

Applicants or their representatives must send project information via email (***strongly preferred***) or regular mail and provide proof of receipt or proof of delivery.

Area of concern: All waterbodies in Massachusetts.

Wampanoag Tribe of Gay Head (Aquinnah)

Bettina Washington
Tribal Historic Preservation Officer (THPO)
20 Black Brook Road
Aquinnah, Massachusetts 02535
Email: thpo@wampanoagtribe-nsn.gov

Applicants or their representative must send project information via email (***preferred***) or regular mail and provide proof of receipt or proof of delivery.

Area of concern: All of Massachusetts.

Mashpee Wampanoag Tribe

ATTN: David Weeden
Tribal Historic Preservation Officer (THPO)
483 Great Neck Road South
Mashpee, Massachusetts 02649
Email: 106review@mwtribe-nsn.gov
Cc: David.weeden@mwtribe-nsn.gov

Applicants or their representative must send project information via email (***preferred***) or regular mail and provide proof of receipt or proof of delivery.

Area of concern: All of Massachusetts.

Narragansett Indian Tribe

ATTN: John Brown
Tribal Historic Preservation Officer (THPO)
Narragansett Indian Longhouse
4425 South County Trail
Charlestown, Rhode Island 02813
Email: tashtesook@aol.com

Applicants or their representative must send project information via email (***preferred***) or regular mail and provide proof of receipt or proof of delivery.

Area of concern: Massachusetts east of the Connecticut River.

Stockbridge-Munsee Community Band of Mohican Indians

ATTN: Jeff Bendremer
Tribal Historic Preservation Manager
Stockbridge-Munsee Community
Tribal Historic Preservation Extension office
86 Spring Street
Williamstown, Massachusetts 01267
Email: thpo@mohican-nsn.gov

Applicants or their representative must send project information via email (***preferred***) or regular mail and provide proof of receipt or proof of delivery.

Area of concern: West of the Connecticut River and Northfield, Montague, Miller's Falls, Turner's Falls, Sunderland, Amherst, Hadley, South Hadley, Chicopee, Springfield and Longmeadow.

APPENDIX B PRE-CONSTRUCTION NOTIFICATION

U.S. Army Corps of Engineers (USACE), New England District (NAE)

PRE-CONSTRUCTION NOTIFICATION (PCN)

DATA REQUIRED BY THE PRIVACY ACT OF 1974

Authority Rivers and Harbors Act, Section 10, 33 USC 403; Clean Water Act, Section 404, 33 USC 1344; Regulatory Programs of the Corps of Engineers; Final Rule 33 CFR 320-332.

Principal Purpose The information provided will be used in evaluating activities under Pre-Construction Notification procedures within New England.

Routine Uses This information may be shared with other federal, state, and local government agencies during the application review process. Submission

Disclosure of requested information is voluntary. However, if information is not provided the PCN application cannot be fully evaluated nor can USACE render a permit decision.

Instructions The applicant must complete ALL required sections of this document before their submission to USACE. The PCN submission to USACE shall include one set of drawings which show the location and character of the proposed activity, statements that address each required field below, and documentation that supports each field (e.g., emails, letters, description/narrative, phone calls, surveys, reports, etc.). Electronic submissions to the following address are strongly preferred: cenae-r-ma@usace.army.mil. The email subject line shall contain the following: General Permit #, PCN, City/Town, and date submitted. An application that is not completed in full will be returned.

(ITEMS 1 THRU 4 TO BE FILLED BY USACE)

1. APPLICATION NO.	2. FIELD OFFICE CODE	3. DATE RECEIVED	4. DATE APPLICATION COMPLETE

(ITEMS BELOW TO BE FILLED BY APPLICANT)

5. APPLICANT'S NAME	8. AUTHORIZED AGENT'S NAME AND TITLE (*agent is not required*)
First - Middle - Last -	First - Middle - Last -
Company -	Company -
E-mail Address -	E-mail Address -
6. APPLICANT'S ADDRESS:	9. AGENT'S ADDRESS:
Address-	Address-
City - State - Zip - Country -	City - State - Zip - Country -
7. APPLICANT'S PHONE NOs. with AREA CODE	10. AGENT'S PHONE NOs. with AREA CODE
a. Residence b. Business c. Fax d. Mobile	a. Residence b. Business c. Fax d. Mobile

STATEMENT OF AUTHORIZATION

11. I hereby authorize, _____ to act on my behalf as my agent in the processing of this general permit PCN application and to furnish, upon request, supplemental information in support of this general permit PCN application.

_____ _____
SIGNATURE OF APPLICANT DATE

NAME, LOCATION, AND DESCRIPTION OF PROJECT OR ACTIVITY

12. PROJECT NAME or TITLE (*see instructions*)

13. NAME OF WATERBODY, IF KNOWN (*if applicable*)	14. PROPOSED ACTIVITY STREET ADDRESS (*if applicable*)
15. LOCATION OF PROPOSED ACTIVITY (*see instructions*)	City: State: Zip:
Latitude: °N Longitude: °W	

16. OTHER LOCATION DESCRIPTIONS, IF KNOWN (*see instructions*)

State Tax Parcel ID: Municipality:

Section: Township: Range:

17. DIRECTIONS TO THE SITE.

18. IDENTIFY THE SPECIFIC GENERAL PERMIT(S) YOU PROPOSE TO USE:

19. DESCRIPTION OF PROPOSED GENERAL PERMIT ACTIVITY (*see instructions*)

20. DESCRIPTION OF PROPOSED MITIGATION MEASURES (*see instructions*)

21. PURPOSE OF GENERAL PERMIT ACTIVITY (*Describe the reason or purpose of the project, see instructions*)

22. Quantity of Wetlands, Streams, or Other Types of Waters Directly Affected by Proposed General Permit Activity (*see instructions*)

Area (square feet)	Length (linear feet)	Volume (cubic yards)	Duration	Purpose

Each PCN must include a delineation of wetlands, other special aquatic sites, and other waters, such as lakes and ponds, and perennial, intermittent, and ephemeral streams, on the project site.

23. List any other GP(s), regional general permit(s), or individual permit(s) used or intended to be used to authorize any part of the proposed project on any related activity (*see instructions*)

24. If the proposed activity will result in the loss of aquatic resources that exceed those identified in the New England District Compensatory Mitigation Thresholds, explain how the compensatory mitigation requirement will be satisfied. (*see instructions*)

25. Is Any Portion of the General Permit Activity Already Complete? ☐ Yes ☐ No If Yes, describe the completed work:

26. List the name(s) of any species listed as endangered or threatened under the Endangered Species Act that might be affected by the proposed GP activity or utilize the designated critical habitat that might be affected by the proposed GP activity. (*see instructions*)

27. List any historic properties that have the potential to be affected by the proposed GP activity or include a vicinity map indicating the location of the historic property or properties. Attach relevant project information, along with any responses received from project notifications to this submittal. (*see instructions*)

28. For a proposed GP activity that will occur in a component of the National Wild and Scenic River System, or in a river officially designated by Congress as a "study river" for possible inclusion in the system while the river is in an official study status, identify the Wild and Scenic River or the "study river":

29. If the proposed GP activity also requires permission from the USACE pursuant to 33 U.S.C. 408 because it will alter or temporarily or permanently occupy or use a U.S. Army Corps of Engineers federally authorized civil works project, have you submitted a written request for section 408 permission from the USACE district having jurisdiction over that project? ☐ Yes ☐ No

If "yes", please provide the date your request was submitted to the USACE District:

30. Does the activity require a 401 Water Quality Certification (WQC)? If so, specify the type of 401 WQC that is required (general or individual). In cases where an individual 401 WQC is required, provide the date the 401 WQC certification request was submitted to the certifying authority and their contact information.

31. If the terms of the GP(s) you want to use require additional information to be included in the PCN (i.e. sampling and analysis plan), please include that information in this space or provide it on an additional sheet of paper marked Block 30. (*see instructions*)

32. I certify that the information in this pre-construction notification is complete and accurate. I further certify that I possess the authority to undertake the work described herein or am acting as the duly authorized agent of the applicant.

SIGNATURE OF APPLICANT	DATE	SIGNATURE OF AGENT	DATE

The Pre-Construction Notification must be signed by the person who desires to undertake the proposed activity (applicant) and, if the statement in block 11 has been filled out and signed, the authorized agent.

18 U.S.C. Section 1001 provides that: Whoever, in any manner within the jurisdiction of any department or agency of the United States knowingly and willfully falsifies, conceals, or covers up any trick, scheme, or disguises a material fact or makes any false, fictitious or fraudulent statements or representations or makes or uses any false writing or document knowing same to contain any false, fictitious or fraudulent statements or entry, shall be fined not more than $10,000 or imprisoned not more than five years or both.

Instructions for Preparing a

Department of the Army

General Permit (GP) Pre-Construction Notification (PCN)

Blocks 1 through 4. To be completed by the U.S. Army Corps of Engineers.

Block 5. Applicant' Name. Enter the name and the e-mail address of the responsible party or parties. If the responsible party is an agency, company, corporation, or other organization, indicate the name of the organization and responsible officer and title. If more than one party is associated with the PCN, please attach a sheet of paper with the necessary information marked Block 5.

Block 6. Address of Applicant. Please provide the full address of the party or parties responsible for the PCN. If more space is needed, attach an extra sheet of paper marked Block 6.

Block 7. Applicant Telephone Number(s). Please provide the telephone number where you can usually be reached during normal business hours.

Blocks 8 through 11. To be completed, if you choose to have an agent.

Block 8. Authorized Agent's Name and Title. Indicate name of individual or agency, designated by you, to represent you in this process. An agent can be an attorney, builder, contractor, engineer, consultant, or any other person or organization. Note: An agent is not required.

Blocks 9 and 10. Agent's Address and Telephone Number. Please provide the complete mailing address of the agent, along with the telephone number where they can be reached during normal business hours.

Block 11. Statement of Authorization. To be completed by the applicant, if an agent is to be employed.

Block 12. Proposed General Permit Activity Name or Title. Please provide a name identifying the proposed GP activity, e.g., Windward Marina, Rolling Hills Subdivision, or Smith Commercial Center.

Block 13. Name of Waterbody. Please provide the name (if it has a name) of any stream, lake, marsh, or other waterway to be directly impacted by the GP activity. If it is a minor (no name) stream, identify the waterbody the minor stream enters.

Block 14. Proposed Activity Street Address. If the proposed GP activity is located at a site having a street address (not a box number), enter it in Block 14.

Block 15. Location of Proposed Activity. Enter the latitude and longitude of where the proposed GP activity is located. Indicate whether the project location provided is the center of the project or whether the project location is provided as the latitude and longitude for each of the "corners" of the project area requiring evaluation. If there are multiple sites, please list the latitude and longitude of each site (center or corners) on a separate sheet of paper and mark as Block 15.

Block 16. Other Location Descriptions. If available, provide the Tax Parcel Identification number of the site, Section, Township, and Range of the site (if known), and / or local Municipality where the site is located.

Block 17. Directions to the Site. Provide directions to the site from a known location or landmark. Include highway and street numbers as well as names. Also provide distances from known locations and any other information that would assist in locating the site. You may also provide a description of the location of the proposed GP activity, such as lot numbers, tract numbers, or you may choose to locate the proposed GP activity site from a known point (such as the right descending bank of Smith Creek, one mile downstream from the Highway 14 bridge). If a large river or stream, include the river mile of the proposed GP activity site if known. If there are multiple locations, please indicate directions to each location on a separate sheet of paper and mark as Block 17.

Block 18. Identify the Specific General Permit(s) You Propose to Use. List the number(s) of the General Permit(s) you want to use to authorize the proposed activity (e.g., GP 4).

Block 19. Description of the Proposed General Permit Activity. Describe the proposed GP activity, including the direct and indirect adverse environmental effects of the proposed activity. The description of the proposed activity should be sufficiently detailed for USACE to determine that the adverse environmental effects of the activity will be no more than minimal. Identify the materials to be used in construction, as well as the methods by which the work is to be done.

Provide drawings to show that the proposed GP activity complies with the terms of the applicable GP(s). Drawings should contain sufficient detail to provide an illustrative description of the proposed GP activity, but do not need to be detailed engineering plans. The written descriptions and illustrations are an important part of the application. Please describe, in detail, what you wish to do. If more space is needed, attach an extra sheet of paper marked Block 19.

Block 20: Description of Proposed Mitigation Measures. Describe any proposed mitigation measures intended to reduce the adverse environmental effects caused by the proposed GP activity. The description of any proposed mitigation measures should be sufficiently detailed for USACE to determine how the measures would avoid and minimize adverse environmental effects. If adverse effects exceed the New England District compensatory mitigation thresholds, you must document how compensatory mitigation would be satisfied in Block 24.

Block 21. Purpose of General Permit Activity. Describe the purpose and need for the proposed GP activity. What will it be used for and why? Also include a brief description of any related activities associated with the proposed project. Provide the approximate dates you plan to begin and complete all work.

Block 22. Quantity of Wetlands, Streams, or Other Types of Waters Directly Affected by the Proposed General Permit Activity. For discharges of dredged or fill material into Waters of the U.S., provide the amount of wetlands, streams, or other types of waters filled, flooded, excavated, or drained by the proposed GP activity. For structures or work in Navigable Waters of the U.S. subject to Section 10 of the Rivers and Harbors Act of 1899, provide the amount of navigable waters filled, dredged, occupied by one or more structures (e.g., aids to navigation, mooring buoys) by the proposed GP activity. The area of impact includes the structures or fills with direct or indirect effects to waters of the U.S. The length of impact includes the length of a stream, including is banks, that are directly affected by the structures or fills. The duration of impact should be identified as temporary (xx days) or permanent. The impact purpose should briefly describe what structure or fill is responsible for the impact.

Block 23. Identify Any Other General Permit(s), Regional General Permit(s), or Individual Permit(s) Used to Authorize Any Part of Proposed Activity or Any Related Activity. List any other GP(s) or individual permit(s) used or intended to be used to authorize any part of the proposed project or any related activity. For linear projects, list other separate and distant crossings of waters and wetlands authorized by these GPs that do not require PCNs. If more space is needed, attach an extra sheet of paper marked Block 23.

Block 24. Compensatory Mitigation Statement for Losses Greater Than the New England District Compensatory Mitigation Thresholds. New England District requires compensatory mitigation at a minimum one for one replacement ratio or greater for all aquatic resource losses that require a PCN and exceed the New England District Compensatory Mitigation Thresholds, unless USACE determines in writing that either some other form of mitigation is more environmentally appropriate or the adverse environmental effects of the proposed GP activity are no more than minimal without compensatory mitigation, and provides an activity specific waiver of this requirement. Describe the proposed compensatory mitigation for wetland losses greater than the New England District Compensatory Mitigation Thresholds or provide an explanation of why USACE should not require wetland compensatory mitigation for the proposed GP activity. If more space is needed, attach an extra sheet of paper marked Block 24.

Block 25. Is Any Portion of the General Permit Activity Already Complete? Describe any work that has already been completed for the GP activity.

Block 26. List the Name(s) of Any Species Listed As Endangered or Threatened under the Endangered Species Act that Might be Affected by the General Permit Activity. If you are not a federal agency, and if any listed species or designated critical habitat might be affected or is in the vicinity of the proposed GP activity, or if the proposed GP activity is located in designated critical habitat, list the name(s) of those endangered or threatened species that might be affected by the proposed GP activity or utilize the designated critical habitat that might be affected by the proposed GP activity. If you are a Federal agency, and the proposed GP activity requires a PCN, you must provide documentation demonstrating compliance with Section 7 of the Endangered Species Act.

Block 27. List Any Historic Properties that Have the Potential to be Affected by the General Permit Activity. If you are not a federal agency, and if any historic properties have the potential to be affected by the proposed GP activity, list the name(s) of those historic properties that have the potential to be affected by the proposed GP activity. Provide all relevant documentation about these historic properties in the PCN submittal. If you are a Federal agency, and the proposed GP activity requires a PCN, you must provide documentation demonstrating compliance with Section 106 of the National Historic Preservation Act.

Block 28. List the Wild and Scenic River or Congressionally Designated Study River if the General Permit Activity Would Occur in such a River. If the proposed GP activity will occur in a river in the National Wild and Scenic River System or in a river officially designated by Congress as a “study river” under the Wild and Scenic Rivers Act, provide the name of the river. For a list of Wild and Scenic Rivers and study rivers, please visit http://www.rivers.gov/

Block 29. General Permit Activities that also Require Permission from the USACE Under 33 U.S.C. 408. If the proposed GP activity also requires permission from the USACE under 33 U.S.C. 408 because it will temporarily or permanently alter, occupy, or use a USACE federal authorized civil works project, indicate whether you have submitted a written request for section 408 permission from the USACE district having jurisdiction over that project.

Block 30. 401 Water Quality Certification. As described above, specify if the activity requires a 401 WQC from the certifying authority.

Block 31. Other Information Required For General Permit Pre Construction Notifications. The terms of some of the General Permits include additional information requirements for preconstruction notifications:

* Maintenance – information regarding the original design capacities and configurations of the outfalls, intakes, small impoundments, and canals.
* Temporary Construction, Access, and Dewatering – a restoration plan showing how all temporary fills and structures will be removed and the area restored to pre-project conditions.
* Repair of Uplands Damaged by Discrete Events – documentation, such as a recent topographic survey or photographs, to justify the extent of the proposed restoration.
* Commercial Shellfish Aquaculture Activities – (1) a map showing the boundaries of the project area, with latitude and longitude coordinates for each corner of the project area; (2) the name(s) of the species that will be cultivated during the period this GP is in effect; (3) whether canopy predator nets will be used; (4) whether suspended cultivation techniques will be used; and (5) general water depths in the project area (a detailed survey is not required).Dredging – (1) a proposed sampling and analysis plan shall be provided to USACE for approval prior to its execution. Pre-application meetings are encouraged.
* Beach Nourishment – sediment grain size should be determined for the length of the beach where nourishment is proposed. The frequency and locations of sediment sampling shall be sufficient to identify the sediment composition of the beach profile. This data shall be consolidated to generate a sediment gradation curve for each sampled transect. Each sampled transect should also be identified on the project plans (drawings).

If more space is needed, attach an extra sheet of paper marked Box 31.

Block 32. Signature of Applicant or Agent. The PCN must be signed by the person proposing to undertake the GP activity, and if applicable, the authorized party (agent) that prepared the PCN. The signature of the person proposing to undertake the GP activity shall be an affirmation that the party submitting the PCN possesses the requisite property rights to undertake the GP activity (including compliance with special conditions, mitigation, etc.).

DELINEATION OF WETLANDS, OTHER SPECIAL AQUATIC SITES, AND OTHER WATERS

Each PCN must include a delineation of wetlands, other special aquatic sites, and other waters, such as lakes and ponds, and perennial, intermittent, and ephemeral streams, on the project site. Wetland delineations must be prepared in accordance with the current wetland delineation manual and regional supplement published by the USACE. The permittee may ask the USACE to delineate the special aquatic sites and other waters on the project site, but there may be a delay if the USACE does the delineation, especially if the project site is large or contains many wetlands, other special aquatic sites, and other waters. The 60-day PCN review period will not start until a delineation has been completed.

DRAWINGS AND ILLUSTRATIONS

General Information.

Three types of illustrations are needed to properly depict the work to be undertaken. These illustrations or drawings are identified as a Vicinity Map, a Plan View or a Typical Cross Section Map. Identify each illustration with a figure or attachment number. For linear projects (e.g. roads, subsurface utility lines, etc.) gradient drawings should also be included. Please submit one copy of all drawings on 8½ x 11 inch plain white paper (electronic submissions preferred). Use the fewest number of sheets necessary for your drawings or illustrations. Each illustration should identify the project, the applicant, and the type of illustration (vicinity map, plan view, or cross section). While illustrations need not be professional (many small, private project illustrations are prepared by hand), they should be clear, accurate, and contain all necessary information.

ADDITIONAL INFORMATION AND REQUIREMENTS

For proposed GP activities that involve discharges into waters of the United States, water quality certification from the State, Tribe, or EPA must be obtained or waived. Some States, Tribes, or EPA have issued water quality certification for one or more GPs. Please check the New England District website to see if water quality certification has already been issued for the GP(s) you wish to use. For proposed GP activities in coastal states, state Coastal Zone Management Act consistency concurrence must be obtained, or a presumption of concurrence must occur. Some States have issued Coastal Zone Management Act consistency concurrences for one or more GPs. Please check the New England District website to see if Coastal Zone Management Act consistency concurrence has already been issued for the GP(s) you wish to use.

APPENDIX C SELF-VERIFICATION NOTIFICATION

U.S. Army Corps of Engineers (USACE)

SELF-VERIFICATION NOTIFICATION (SVN)

DATA REQUIRED BY THE PRIVACY ACT OF 1974

Authority Rivers and Harbors Act, Section 10, 33 USC 403; Clean Water Act, Section 404, 33 USC 1344; Regulatory Programs of the Corps of Engineers; Final Rule 33 CFR 320-332.

Principal Purpose This information will be used in evaluating activities under Self-Verification procedures within Massachusetts.

Routine Uses Routine uses will include: (1) Documenting compliance with the terms and conditions of the General Permit (GP) for activities that may require authorization pursuant to one or more of USACE's Regulatory authorities. (2) Records may be referred to other Federal, State, and local agencies for evaluation and enforcement purposes.

Disclosure Failure to fully comply and abide by the GP terms and conditions prior to commencing work and after completion project may result in formal enforcement action, up to and including monetary penalties and/or legal action, pursuant to 33 CFR Part 326.

Instructions The permittee must complete ALL required sections of this document before commencing USACE-regulated activities. A copy of this completed SVN must be kept on site during construction and be made available for review by USACE and other Federal, State, & Local regulatory authorities at any time. Within 30 days of initiating project construction, the permittee shall submit the completed SVN to USACE. The SVN shall be submitted to USACE as **ONE signed document** that includes project plans and documentation that supports each field (e.g., emails, letters, description, phone calls, surveys). Electronic submissions to the following address are strongly preferred: cenae-r-ma-sv@usace.army.mil. The email subject line shall contain the following: GP #, SVN, City/Town, and date submitted.

(ITEMS 1 THRU 3 TO BE FILLED BY USACE)

1. APPLICATION NO.	2. FIELD OFFICE CODE	3. DATE RECEIVED

APPLICANT AND AGENT INFORMATION

4. APPLICANT'S NAME	7. AGENT'S ADDRESS:
First - Middle - Last -	First - Middle - Last -
Company -	Company -
E-mail Address -	E-mail Address -
5. APPLICANT'S ADDRESS:	8. AGENT'S ADDRESS:
Address-	Address-
City - State - Zip - Country -	City - State - Zip - Country -
6. APPLICANT'S PHONE NOs. w/AREA CODE	9. AGENTS PHONE NOs. w/AREA CODE
a. Residence b. Business c. Fax	a. Residence b. Business c. Fax

NAME, LOCATION, AND DESCRIPTION OF PROJECT SITE

10. PROJECT NAME OR TITLE

11. FILE NUMBER(S) OF PREVIOUS USACE ACTIONS ON THE SITE (if applicable)	12. NAME OF WATERBODY
13. PROJECT COORDINATES (in decimal degrees)	14. PROJECT STREET ADDRESS (if applicable)
Latitude: ◦N Longitude: ◦W	Address
	City - State - Zip -

ACTIVITY TYPE, PROJECT IMPACTS, AVOIDANCE & MINIMIZATION

15. GENERAL PERMIT ACTIVITIES (CHECK ALL THAT APPLY)

1 ☐	6 ☐	11 ☐	16 ☐	21 ☐
2 ☐	7 ☐	12 ☐	17 ☐	22 ☐
3 ☐	8 ☐	13 ☐	18 ☐	23 ☐
4 ☐	9 ☐	14 ☐	19 ☐	24 ☐
5 ☐	10 ☐	15 ☐	20 ☐	25 ☐

16. SUMMARY OF PROJECT IMPACTS (*see instructions*)

Area (square feet)	Length (linear feet)	Volume (cubic yards)	Duration

17. PROJECT PLANS (BY CHECKING THE BOXES BELOW, YOU CERTIFY THESE ITEMS ARE COMPLETE) (*see instructions*)

- ☐ a. Plans shall at least contain the following: Vicinity Map, Plan View, and Typical Cross Section View of the proposed activity.
- ☐ b. All direct, indirect and secondary impacts from USACE regulated activities are shown on the project plans.
- ☐ c. The size of the impact area for each activity (acre, square feet, linear feet) are shown on the project plans.
- ☐ d. For discharges of fill material (§404), the volume of fill material is identified on the project plans.
- ☐ e. The duration of each impact, permanent or temporary (X days), is identified on the project plans.
- ☐ f. Do activities with permanent impacts result in the loss of waters? If so, this is identified on the project plans.
- ☐ g. All aquatic resources in the vicinity of the USACE regulated activities are delineated on the project plans.

18. AVOIDANCE & MINIMIZATION (BY CHECKING THE BOXES BELOW, YOU CERTIFY THESE CRITERIA ARE MET) (*see instructions*)

- ☐ a. The project has been designed to avoid and minimize impacts to aquatic resources.
- ☐ b. The footprint of activities in waters of the U.S. has been reduced to only what is necessary to achieve the overall project purpose.
- ☐ c. All practicable measures have been taken to avoid and minimize impacts to aquatic resources through construction techniques and site access (e.g., Best Management Practices, Time of Year Restrictions).
- ☐ d. All temporary impacts from USACE regulated activities will be restored upon completion of construction and the project area will be returned to pre-construction contours and conditions.

COMPLIANCE WITH FEDERAL REGULATIONS & SUPPLEMENTAL INFORMATION

19. DUE DILIGENCE (*see instructions*)

Complete the entries below to document compliance with the following Federal requirements. Construction may NOT begin if a PCN is/may be required, and you must contact USACE to determine permitting requirements. Documentation that demonstrates how the activity complies with each field below shall be submitted to the USACE as noted in the instructions block. See each General Condition (GC) in the GP for how to comply with each requirement.

a. State Historic Preservation Officer	Select Option		
b. Massachusetts BUAR	Select Option		
c. Tribal Historic Preservation Officers	Select Option		
d. Endangered Species Act - NOAA	Select Option		
e. Endangered Species Act - USFWS	Select Option		
f. Northern Long Eared Bat (ESA)	Select Option		
g. Essential Fish Habitat	Select Option		
h. Wild & Scenic Rivers	Select Option		
i. 401 Water Quality Certification 401	Select Option		
	401 WQC/OOC File Number:	OOC issued:	401 issued:
j. Section 408 Permission	Select Option		
k. Coastal Zone	Select Option		
l. Construction Mats	Select Option		
m.Time of Year Restrictions	Select Option		
n. Vernal Pools	Select Option		
o. Sediment & Erosion Controls	Select Option		
p. Stream/Wetland Crossings	Select Option		

20. AQUACULTURE ACTIVITIES - GP 18 (*see instructions*)

- ☐ a. If required, an Aquaculture Certification from the Massachusetts Division of Marine Fisheries was obtained prior to commencing work.
- ☐ b. Coordination with the U.S. Coast Guard pursuant to Private Aids to Navigation has occurred prior to commencing work.
- ☐ c. If required, a MEPA Certificate was obtained from the Massachusetts Environmental Protection Agency prior to commencing work. Select Option
- ☐ d. The prospective permittee contacted local authorities (e.g. harbormaster, select board, shellfish constable) for authorization of their facility prior to commencing work.

21. ADDITIONAL INFORMATION/ATTACHMENTS (*see instructions*)

- ☐ a. The project plans are enclosed in this SVN submittal (see block 17).
- ☐ b. The activity Select Option funded through the Bipartisan Infrastructure Bill (also known as the Infrastructure Investment and Jobs Act).
- ☐ c. All required state, local and federal approvals were acquired prior to starting construction in USACE jurisdiction.
- ☐ d. After construction of the activity is completed, a complete Certificate of Compliance will be submitted to USACE.

22. IS THERE ANOTHER LEAD FEDERAL AGENCY:

☐ YES ☐ NO

23. STATEMENT OF AUTHORIZATION *(see instructions)*

I certify that I possess the authority to undertake the work described herein or am acting as the duly authorized agent of the applicant.

SIGNATURE OF APPLICANT	DATE	SIGNATURE OF AGENT	DATE

24. SIGNATURES *(see instructions)*

I hereby certify that the information in this Self-Verification Notification is complete and accurate. As the applicant or their duly authorized agent, I certify the activity was completed in accordance with the terms and conditions of the GP. This includes all applicable terms, general conditions, and activity-specific GP criteria. I agree to allow the duly authorized representatives of the Corps of Engineers Regulatory Program and other regulatory or advisory agencies to enter upon the premises of the project site at reasonable times to evaluate inspect and photograph site conditions. This consent to enter the property is superior to, takes precedence over, and waives any communication to the contrary. For example, if the property is posted as “no trespassing” this consent specifically supersedes and waives that prohibition and grants permission to enter the property despite such posting.

SIGNATURE OF APPLICANT	DATE	SIGNATURE OF AGENT	DATE

18 U.S.C. Section 1001 provides that: Whoever, in any manner within the jurisdiction of any department or agency of the United States knowingly and willfully falsifies, conceals, or covers up any trick, scheme, or disguises a material fact or makes any false, fictitious or fraudulent statements or representations or makes or uses any false writing or document knowing same to contain any false, fictitious or fraudulent statements or entry, shall be fined not more than $10,000 or imprisoned not more than five years or both.

Instructions for Preparing a
Department of the Army
General Permit (GP) Self-Verification

Blocks 1 through 3. To be completed by the Corps of Engineers.

Block 4. Applicant' Name. Enter the name and the e-mail address of the responsible party or parties. If the responsible party is an agency, company, corporation, or other organization, indicate the name of the organization and responsible officer and title. If more than one party is associated with the self-verification, please attach a sheet of paper with the necessary information marked Block 4.

Block 5. Address of Applicant. Please provide the full address of the party or parties responsible for the self-verification. If more space is needed, attach an extra sheet of paper marked Block 5.

Block 6. Applicant Telephone Number(s). Please provide the telephone number where you can usually be reached during normal business hours.

Blocks 7 through 9. To be completed, if you choose to have an agent.

Block 7. Authorized Agent's Name and Title. Indicate name of individual or agency, designated by you, to represent you in this process. An agent can be an attorney, builder, contractor, engineer, consultant, or any other person or organization. Note: An agent is not required.

Blocks 8 and 9. Agent's Address and Telephone Number. Please provide the complete mailing address of the agent, along with the telephone number where they can be reached during normal business hours.

Block 10. Proposed General Permit Activity Name or Title. Please provide a name identifying the proposed GP activity, e.g., Windward Marina, Rolling Hills Subdivision, or Smith Commercial Center.

Block 11. File Number(s) of Previous USACE Actions on the Site Please provide any known USACE file number. If the activity does not have a known USACE file number, you may state N/A.

Block 12. Name of Waterbody. Please provide the name (if it has a name) of any stream, lake, marsh, or other waterway to be directly impacted by the GP activity. If it is a minor (no name) stream, identify the waterbody the minor stream enters.

Block 13. Proposed Activity Coordinates. Please enter the latitude and longitude of where the proposed GP activity is located. Indicate whether the project location provided is the center of the project or whether the project location is provided as the latitude and longitude for each of the "corners" of the project area. If there are multiple sites, please list the latitude and longitude of each site (center or corners) on a separate sheet of paper and mark as Block 13.

Block 14. Proposed Activity Street Address. If the proposed activity is located at a site having a street address (not a box number), enter it in Block 14.

Block 15. General Permit Activity Type. Please select all GP activity types that apply to the proposed activity. A list of GP activity types can be found in Section III of the GP.

Block 16. Summary of Project Impacts. Please provide ALL proposed impacts, both temporary and permanent in duration, that are located in Waters of the United States. The area of impact shall be provided in square feet (SF). When applicable, impacts that result in conversion of stream bank or shoreline must also be identified in linear feet (LF). Dredging or the discharge of dredged or fill material shall also include the volume, cubic yards (CY), of material removed from or placed into Waters of the U.S. If more entries are required, please attach a table matching the desired format in Block 16.

Block 17. Project Plans. Please verify that items a-g are included in the project plans. Three types of illustrations are necessary to properly depict the proposed work. These illustrations or drawings are identified as a Vicinity Map, a Plan View (Aerial view) and a Cross Section Map. For linear projects (e.g. roads, subsurface utility lines, etc.) gradient drawings (longitudinal profile) should also be included. Plans must accurately depict the existing conditions and all aspects of the proposed activity located in waters of the U.S. Please submit one copy of all drawings formatted to print on 8½ x 11 inch or 11 x 17 inch plain white paper. Use the fewest number of sheets necessary for your drawings or illustrations. Each illustration should identify the project, the applicant, and the type of illustration (vicinity map, plan view, or cross section). While illustrations need not be certified engineering sheets; they should be clear, accurate, contain all necessary information, and depict all proposed work. Each submission must also include a delineation of wetlands, other special aquatic sites, and other waters, such as lakes and ponds, and perennial, intermittent, and ephemeral streams, on the project site. Wetland delineations must be prepared in accordance with the current wetland delineation manual and regional supplement published by USACE.

Block 18. Avoidance & Minimization. Please verify that items a-d have been implemented for the proposed activity.

Block 19. Due Diligence. Please complete all the fields and submit documentation to USACE to demonstrate compliance with the above requirements. This Documentation may include emails, letters, meeting notes, phone call log, project narrative, project plans, a species list from the NOAA Section 7 Mapper, a completed copy of the IPAC determination keys, etc. Documentation should be limited to what is necessary to demonstrate how the proposed activity meets each requirement. Refer to the MA GP, Appendix A, for specific guidance on the identification of previously identified historic properties and previously unidentified historic properties. Endangered Species: *The applicant must be designated as the non-federal representative for the purposes of Section 7 consultation to select the Rangewide D-Key options. Otherwise, the applicant shall select the following option when IPAC indicates the NLEB is present: "The activity IS located within the NLEB Species Range (PCN Required)."

Block 20. Aquaculture Activities. Please verify that items a-d have been obtained or completed prior to commencing work in waters of the U.S.

Block 21. Additional Information/Attachments. Please verify that items a-d have been completed prior to commencing work in waters of the U.S.

Block 22. Lead Federal Agency. Please identify if there is another lead federal agency involved with the proposed activity. Enter the lead federal agency name (e.g., the Federal Emergency Management Agency, FEMA) and the agency's designated person of contact for the activity.

Block 23. Statement of Authorization. The applicant shall sign this section for all activities. If an agent is to be employed, the agent shall sign this section.

Block 24. Signatures. The SVN must be signed by the person proposing to undertake the GP activity, and if applicable, the authorized party (agent) that prepared the SVN. The signature of the person proposing to undertake the GP activity shall be an affirmation that the party submitting the SVN possesses the requisite property rights to undertake the GP activity.

US Army Corps of Engineers®
New England District

APPENDIX D: PCN APPLICATION CHECKLIST

The following information shall be submitted for all PCNs for USACE to properly evaluate your application. Some applications may require more information and this checklist is offered as a tool to assist applicants with submitting a complete application.

SECTION 1: GENERAL APPLICATION INFORMATION

1. ☐ Complete the Pre-Construction Notification document (Appendix B).
2. ☐ Specify which local/state/federal authorizations are required for the project and if any have been obtained or applied for at the time of USACE application submittal.
3. ☐ Identify all funding sources the project will receive or has received to date. Provide any relevant information in the application submission.
4. ☐ Is this part of a larger project that is being implemented in phases? If so, describe the project schedule and how each phase will be implemented.
5. ☐ Describe the existing conditions on the site and the general land use in the vicinity of the project at the time application submittal.
6. ☐ Provide any historic information available that you may have of project area, e.g., existing USACE permit numbers, the names under which the permits were obtained if the permit numbers are unknown, construction dates and proof of prior existence (aerials, photos, town hall records, affidavits, state or local permits, etc.) to verify that the project predates regulation and is "vested".[19]
7. ☐ The anticipated start and end dates for construction.

SECTION 2: WETLAND DELINEATION

8. ☐ Data used to support aquatic resource boundary determinations (delineation forms, delineation map(s) that show the locations of each aquatic resource in the project area, aerial and ground photographs, LIDAR imagery, national wetland inventory maps, soil maps, national hydrography dataset maps, floodplain maps, historical imagery, etc.).
9. ☐ Photographs of the wetland(s) and/or waterway(s) where impacts are proposed. Photos at low tide are preferred for work in tidal waters.
10. ☐ Indicate the relationship of the project area to waters of the U.S., i.e., adjacent wetlands, tidal influence or hydraulic connectivity through culverts, or other conveyances, etc.
11. ☐ At minimum the delineation map/figure should include the following:
    a. Contour lines showing topography.
    b. North arrow.
    c. Bar and text scale.
    d. Legend.
    e. Drawn project boundary.
    f. High tide line, mean high water, mean low water, ordinary high water mark, and/or wetland boundaries.
    g. Captions with a unique name for each aquatic resource and the area or length of the aquatic resource within the project area.

[19] Vested is exempt (someone or something) from a new law or regulation.

h. Appropriate landmarks and features (e.g., culverts, special aquatic sites, etc.).
i. Points showing the paired upland and wetland delineation locations for tidal and non-tidal wetlands only.

SECTION 3: AVOIDANCE & MINIMIZATION

12. ☐ Describe specific measures taken to avoid impacts to aquatic resources or describe why aquatic resources could not be avoided while achieving the project purpose and need.
13. ☐ For impacts to aquatic resources that could not be avoided, describe specific considerations/ measures taken to minimize the area of proposed impacts to aquatic resources in designing the project.
14. ☐ Describe specific measures taken to avoid and minimize the proposed direct, indirect, and secondary impacts to aquatic resources and their functions through construction techniques and timing.
15. ☐ If applicable, provide a restoration plan that describes how all temporary fills and structures will be removed and the area restored to pre-impact conditions (see GC 22).
16. ☐ If applicable, provide an Invasive Species Control Plan (see GC 29). For sample control plans, see www.nae.usace.army.mil/missions/regulatory/invasive-species.
17. ☐ If applicable, describe how the proposed wetland/waterbody crossing is compliant with GC 31, Stream Work and Crossings, and Wetland Crossings.

SECTION 4A: PROJECT IMPACTS

18. ☐ Describe the overall project and the activities located in Waters of the U.S. (WOTUS) that you are seeking authorization for.
19. ☐ Identify the following for project impacts in WOTUS:
    a. ☐ Direct, indirect, secondary impacts[20] within WOTUS.
    b. ☐ The size of each impact (square feet or acres, or linear feet).
    c. ☐ For discharges of fill material (§404), specify the volume of fill material to be discharged (cubic yards).
    d. ☐ The impact duration from each activity, permanent or temporary (X days).

SECTION 4B: PROJECT PLANS

20. ☐ Submit project plans that depict all impacts in WOTUS. On the project plans, applicants shall provide:

    General Information

    a. ☐ Plan view and typical cross-section view sheets that show the existing and proposed conditions. These illustrations should each be identified with a figure number, date of the map, the project title, the name of the applicant and the type of illustration (vicinity map, plan view, or cross section).
    b. ☐ Drawings, sketches, or plans that are legible, reproducible (color is encouraged, but features must be distinguishable in black and white), drawn to scale, and no larger than 11”x17” and 10 MB when submitted in digital format. Numeric and graphic/bar scales must agree, and plan details must be measurable using a standard engineer’s scale on printed plans. Reduced plans are not acceptable.
    c. ☐ The north arrow and remove miscellaneous non-wetland or water project related features such as conduits, utility poles, guardrails, etc.

[20] See definitions section for the definitions of direct, indirect, secondary impacts.

d. ☐ Clearly draw the overall limits of work, staging areas, disposal sites, access routes, and any permittee responsible mitigation sites. These areas may include both aquatic resources and upland areas.
e. ☐ Names or numbers of all roads in the site's vicinity and ownership and numbers of abutting parcels.
f. ☐ Datum in plan and elevation views. The horizontal datum shall be in the NAD 83 Massachusetts State Plane Coordinate System (INSERT) in U.S. survey feet. The vertical data in coastal projects shall be referenced to either MLLW or the North American Vertical Datum of 1988 (NAVD 88). Both the distance and depth units shall be U.S. survey feet and specified on the project plans.

Aquatic Resources & Project Impacts

g. ☐ Delineation of all aquatic resource types on site including salt marsh; other special aquatic sites (vegetated shallows, mudflats, riffles and pools, coral reefs, and sanctuaries and refuges); other waters, such as lakes, ponds, vernal pools, natural rocky habitat (tidal only), and perennial, intermittent, and ephemeral streams.
h. ☐ Identify the substrate type (cobble/gravel, organic detritus, sand/shell, silt, mud) and the approximate percentage of each substrate type on site. Grain sizes shall be based on Wentworth grain size classification scale for granules, pebbles, cobbles, and boulders. Sediment samples with a content of 10% or more of pebble-gravel-cobble and/or boulder in the top layer (6-12 inches) should be delineated and material with epifauna/macroalgae should be differentiated from bare pebble-gravel-cobble and boulder.
i. ☐ The direction of ebb and flood in tidal waters and direction of flow in non-tidal waters.
j. ☐ In tidal waters, the project boundary distance from special aquatic sites identified in 20g above if within 25 feet from that resource.
k. ☐ USACE jurisdictional boundaries including ordinary high-water mark (OHWM), high tide line (HTL), mean high water (MHW). Other boundaries include mean low water (MLW), mean lower low water (MLLW), as applicable.
   - Non-tidal: OHWM and/or wetland boundaries.
   - Tidal (structures/work only): MHW, MLW.
   - Tidal (Fill and Structures/work): HTL, MHW, MLW.
   - Tidal (Dredging/Beach Nourishment): HTL, MHW, MLW, MLLW.
l. ☐ Identification of each aquatic resource with a unique name (ex. Wetland 1, Wetland 2, Tributary 1, Beaver Brook, Atlantic Ocean) and the size of each aquatic resource within the project area (square feet or acres).
m. ☐ Impacts to each aquatic resource with captions denoting the size of each impact (square feet, acres, or linear feet) and the duration of the impact (ex. Permanent, Temporary (X days).

SECTION 4C: PROJECT PLANS - SPECIFIC PROJECT INFORMATION

21. ☐ For projects involving Navigation, Structures, Dredging, and/or Beach Nourishment, the applicant shall also address the following:

Navigation

a. ☐ Identify the locations of adjacent Federal navigation project (FNP) and/or state/local navigation projects on the project plans.
b. ☐ Specify the distance between the FNP and proposed project boundary, the authorized depths of the FNP, and state plane coordinates of seaward end(s) of project structures near an FNP.

Structures

a. ☐ Identification of the piling type (steel, timber, concrete) and diameter to be removed and/or installed.
b. ☐ Specify the minimal height of the structures' frame over saltmarsh. To meet the SV threshold, piers must be ≤4 feet in width and this minimal height must achieve a 1.5:1 ratio (i.e., a 4-foot-wide pier is 6 feet above a saltmarsh).
c. ☐ For floats, the methods of securing them (piles, bottom anchors) and for keeping them off substrate (skids, stops) at low water. To meet the SV threshold, a minimum depth of 18-inches of water should be maintained below a floating dock/structure at lower tide levels.

Dredging

a. ☐ The area (SF, acre) and volume (CY) of material to be dredged waterward of MHW for each dredge location.
b. ☐ Dredge boundaries.
c. ☐ Bathymetry for existing, proposed, and historical (include dates and USACE permits) dredge depths.
d. ☐ The likely final angle of repose of the side cuts based on the physical characterization of the material to be dredged and based upon the high/ medium/low, wave or current energy of the location.
e. ☐ Label area whether the dredging is new, maintenance, improvement, or a combination.
f. ☐ Location of the disposal site (include location sheet). NOTE: For projects proposing open water, nearshore disposal, or beach nourishment, contact USACE as early as possible for sampling and testing protocols. Sediment testing, including physical (e.g., grain-size analysis), chemical and biological testing may be required. Sampling/testing of sediments without such contact should not occur and if done, will be at the applicant's risk.
g. ☐ The methods and areas used to retain or prevent dredged material from running back into the wetland or waterway. Provide the capacity of the storage area and points of runback, including the overflow route, into the aquatic system.
h. ☐ For open-water disposal, explain why inland or beneficial reuse sites are not practicable.
i. ☐ Show the finished top elevation of the disposal site.

Beach Nourishment

a. ☐ For beach nourishment, identify the disposal footprint, existing and proposed nourishment profiles (multiple profiles are appropriate if the site is more than 150 feet long or non-contiguous), total fill area (SF) and volume (CY), fill area and volume waterward of the HTL, and delineation of dunes, banks, existing beach vegetation, and contours.
b. ☐ For beach nourishment identify the substrate type (fine sand, sand, cobble, boulder) and/or grain-size of existing material.

SECTION 5: STRUCTURES

22. ☐ For projects with the removal of existing pilings identify the number, type (steel, timber, concrete) and diameter of pilings to be removed and the methodology for removal (cut off at mud line, pulling, vibratory, etc.).
23. ☐ For projects with the installation of new pilings identify the number, type (steel, timber, concrete) and diameter of pilings to be installed and the methodology for installation (vibratory hammer, impact hammer etc.).
24. ☐ Identify any existing structures and moorings in waters adjacent to the proposed activity, their dimensions, and the distance to the limits and coordinates of any proposed mooring field or reconfiguration zone. For reconfiguration zone and mooring fields, provide the coordinates for all

corners based on the Massachusetts State Plane Coordinate System. Specify the maximum number of slips and/or moorings within proposed reconfiguration zones or anchorage areas.

25. ☐ The dimensions of the structure or work and extent of encroachment waterward of MHW and from affixed point on the shoreline or upland.
26. ☐ Shoreline of adjacent properties and property boundary offset for structures. In narrow waterbodies, the distance to opposite shoreline, waterway width, and structures across from proposed work.
27. ☐ For new commercial boating facilities, anchorage areas or reconfiguration zones, provide a description of the type of vessels that would use the facility, and any plans for sewage pump-out facilities, fueling facilities and contingency plans for oil spills.
28. ☐ See Sections 4A-C above.

SECTION 6: AQUACULTURE

29. ☐ Identify the coordinates for lease area corners and gear configuration area on the project plans.
30. ☐ Identify the proposed aquaculture gear type (buoys, floats, racks, trays, nets, lines, tubes, cages, containers, and other structures). Provide the impacts for each aquaculture gear type (see Section 4A 19a-d).
31. ☐ For a GP 18 to be valid, applicants must have (a) their MA DMF Aquaculture Certification letter for licensed shellfish aquaculture sites, (b) documentation that the applicant has coordinated with the U.S. Coast Guard regarding USCG Private Aids to Navigation standards, (c) their MEPA Certificate (if required), and (d) documentation that the applicant has contacted their local authorities (ex. harbormaster, select board, shellfish constable) for authorization of their facility.
32. Provide information on site the operation, maintenance, and access. Will the site be accessed via boat, kayak, etc.? Will cages be removed in the winter? How often will gear be checked on? Is there an operations plan for the proposed aquaculture area?
33. ☐ See Sections 4A-C above.

SECTION 7: DREDGING

34. ☐ Sampling plan requests for new, improvement or maintenance dredging must submit completed **Dredged Material Evaluation checklist found at Dredged Material Evaluation Checklist, Sampling and Analysis Plan Requirements from Applicant (army.mil)** and identify the method of handling/transporting the dredged material.
35. ☐ Identify grain-size of material to be dredged (e.g., silty sand) and provide any existing sediment grain size and bulk sediment chemistry data from the proposed project or nearby projects. Include information on any recent spills of oil and/or other hazardous materials and/or nearby outfalls. Document the information source, e.g., EPA database, the harbormaster or fire chief. If there are none, state “none”.
36. ☐ See Section 4A, 4B and 4C, Dredging 21(a-i) above.

SECTION 8: WETLAND/WATERBODY CROSSINGS

37. ☐ For the stream crossing, identify the crossing methodology on the project plan (e.g., dam and pump, dry, wet, etc.). Submit a waterway crossing sequencing plan with the application.
38. ☐ If the project includes a permanent crossing of a tidal waterway, your project design should be modified to match the velocity, depth, cross-sectional area, and substrate of the existing waterbody adjacent to the crossing and provide documentation (hydraulic analysis including low lying property analysis) that the size of the crossing will not restrict tidal flow over the full natural tide range and will not adversely affect abutting infrastructure.

39. ☐ If the work includes a permanent crossing of a non-tidal stream, your project design should be modified to match the culvert gradient of the existing stream channel profile, provide clearance for ≥1.2 times bank full width and conveyance should be embedded ≥1-2 feet for box culverts and pipe arches or ≥1-2 feet and at least 25 percent for rounded pipes/culverts in accordance with the Massachusetts Stream Crossing Standards. Provide the basis for any variation to this requirement.
40. ☐ If the work includes a permanent crossing of a non-tidal stream, the structure should be designed to include a natural bottom substrate within the conveyance that matches the characteristics of the substrate in the natural stream channel and the character of the banks (mobility, slope, stability, confinement, grain and rock size). The conveyance should be designed with a minimum openness ratio ≥0.82-feet (0.25-meters). For how to calculate openness ratio and stream simulation ecological approach for road and stream crossings, see https://www.nae.usace.army.mil/Missions/Regulatory/Stream-and-River-Continuity/.

SECTION 9: COMPENSATORY MITIGATION

41. ☐ Does the project require Compensatory Mitigation[21] for impacts to Waters of the U.S.? (See Section V in the 2023 Massachusetts General Permit)
42. ☐ If the project requires mitigation, does the selected compensatory mitigation option (i.e., In-Lieu Fee, permittee-responsible mitigation) deviate from the order of the options presented in §332.3(b)(2)-(6)? If so, please explain why. https://www.ecfr.gov/current/title-33/chapter-II/part-332/section-332.3
43. ☐ For any compensatory mitigation that involves preservation, the applicant must use a site protection instrument to preserve the parcel in perpetuity. (Conservation Easement, Deed Restriction, etc.) https://www.mass.gov/service-details/conservation-restriction-review-program.

SECTION 10: HISTORIC PROPERTIES & NOTIFICATIONS TO SHPO, THPOs, BUAR

44. ☐ Notify the SHPO, Massachusetts Historical Commission, of the Project via Certified Mail and include proof of delivery or receipt in the application package (See Appendix A).
45. ☐ As applicable, notify the THPOs, Narragansett Indian Tribe, Wampanoag Tribe of Gay Head (Aquinnah), and Mashpee Wampanoag Tribe, of the Project via email OR mail and include proof of delivery or receipt in the application package (See Appendix A).
46. ☐ As applicable, notify the BUAR via email (*strongly preferred*) OR mail and include proof of delivery or receipt in the application package (See Appendix A).
47. ☐ Include responses to this notification in the permit application.
48. ☐ As applicable, information on historic properties (Tribal and Archaeological) within the project area should be provided in the permit application.

SECTION 11: ENDANGERED SPECIES & ESSENTIAL FISH HABITAT

49. ☐ Provide a USFWS Information for Planning and Consultation (IPaC) Official Species List from https://ecos.fws.gov/ipac and the email of the individual who generated the list (see GC 10 of the 2023 Massachusetts General Permit for more information).
50. ☐ Provide a species list from the NMFS Section 7 Endangered Species Act mapper at https://noaa.maps.arcgis.com/apps/webappviewer/index.html.
51. ☐ Provide a species list from the NMFS Essential Fish Habitat Mapper at https://www.habitat.noaa.gov/apps/efhmapper/?page=page_3.

[21] Your mitigation proposal must be consistent with the December 29, 2020 Compensatory Mitigation Standard Operating Procedures at https://www.nae.usace.army.mil/Portals/74/docs/regulatory/Mitigation/Compensatory-Mitigation-SOP-2020.pdf and 2008 Mitigation Rule.

52. ☐ If the project will generate turbidity, describe the extent of turbidity and if erosion controls will be used to contain turbidity. If turbidity controls are not operationally feasible, explain the basis for your conclusion and identify any other measures that you will implement to minimize resuspension of sediment.
53. ☐ Identify the substrate type and any aquatic resources that will be affected by the proposed action. (SAV, salt marsh, sand, silt/clay, rocky/hard bottom)
54. ☐ For projects which will include the installation of pilings/sheet-piles, identify the substrate at the project site (sand, cobble, silt/mud/clay), the installation method (vibratory hammer, impact hammer, combination) and indicate whether the following “soft start” procedures at beginning of the workday and after a 30-minute period of rest will be deployed:
    a. ☐ Vibratory Pile Installation: pile driving will be initiated for 15 seconds at reduced energy followed by a one-minute waiting period. This sequence of 15 seconds of reduced energy driving, one-minute waiting period will be repeated two additional times, followed immediately by pile-driving at full rate and energy.
    b. ☐ Impact Pile Installation: pile driving will commence with an initial set of three strikes by the hammer at 40% energy, followed by a one-minute wait period, then two subsequent 3-strike sets at 40% energy, with one-minute waiting periods, before initiating continuous impact driving.
55. ☐ If the project involves dredging, describe any dredge history, number of dredge events to be covered by the permit, erosion/sediment controls, dredge type, intake structures (mesh screen size), dredged material disposal site.
56. ☐ For project activities associated with structures, identify the number, type (drill barge, work boat, tugboat, etc.), and size of any temporary vessels that will be used. Specify measures that will be implemented to ensure vessels are not berthed in shallow water or will “ground out” at low tide.
57. ☐ For aquaculture projects identify whether any component of the gear is seasonal (will be removed annually) or will be in place year-round. If gear will be present year-round and will be variably managed (e.g., floating in summer, bottom in winter) identify month/date for such configurations.
58. ☐ For aquaculture projects identify whether the project will involve use of an existing vessel or new vessel. Identify the length for all work vessels and identify the distance round trip from vessel berthing location and aquaculture area.
59. ☐ For project activities associated with docking structures (either commercial, industrial, or recreational) identify the number, type (motorized/non-motorized, jet-ski, sailboat, kayak, canoe, other that will be berthed there and the sizes of each.
60. ☐ Information required for Section 305(b)(2) of the Magnuson-Stevens Fishery Conservation and Management Act:
    a. Results of an eelgrass survey completed per the INSERT.
    b. Essential Fish Habitat Assessment to determine project-related impacts to essential fish habitat, using guidance developed by the National Marine Fisheries Service.
61. ☐ A document containing the following information (requirements of 50 CFR §600.920(e)(3)):
    a. Description of proposed action.
    b. Analysis of potential adverse effects on essential fish habitat.
    c. Conclusions regarding the effects of the action on essential fish habitat.
    d. If applicable, proposed mitigation.
    e. Analysis of alternatives to the proposed action.
    f. Other:

THIS PAGE IS INTENTIONALLY LEFT BLANK

DOCUMENT A00832

ARMY CORPS OF ENGINEERS

Self-Verification (SV) Approval

*** THIS PAGE IS INTENTIONALLY LEFT BLANK ***

From: Vasconcelos, Daniel B CIV USARMY CENAE (USA)
To: Beckwith, Corinna (DOT)
Subject: RE: SVNF for Lawrence (608930) Lawrence Manchester Rail Trail
Date: Thursday, April 4, 2024 10:38:05 AM

CAUTION: This email originated from a sender outside of the Commonwealth of Massachusetts mail system. Do not click on links or open attachments unless you recognize the sender and know the content is safe.

Hi Cori,

Thanks for the additional information and revised plans.

We received your Self-Verification (SV) application for the General Permits for Massachusetts (GPs for MA) indicating that you plan to conduct work in our jurisdiction. We have logged this into our database and assigned it file number NAE-2024-00583. Please reference this number in any future correspondence with us.

This confirmation that we have received the SV notification form does not confirm that the work is authorized under the GPs for MA. By submitting the SV application, you are self-verifying that your project is authorized under, and meets the terms and conditions of, the applicable GPs with no review by the Corps of Engineers. Activities that do not qualify for SV require a PCN to the Corps.

Regards,
Dan

Daniel B. Vasconcelos, PWS
Environmental Scientist/Project Manager
U.S. Army Corps of Engineers
New England District, Regulatory Division
696 Virginia Road
Concord, MA 01742
(978) 318-8653

From: Beckwith, Corinna (DOT) <corinna.beckwith@dot.state.ma.us>
Sent: Tuesday, April 2, 2024 9:23 AM
To: Vasconcelos, Daniel B CIV USARMY CENAE (USA) <Daniel.B.Vasconcelos@usace.army.mil>
Subject: [Non-DoD Source] RE: SVNF for Lawrence (608930) Lawrence Manchester Rail Trail

Hello Dan,
We have a response to your Additional Information request and the linked pdf is around 16M.

If you have trouble with the link, please send me the invite to your FTP site, so that I may upload it.

Thank you,

I'm using Adobe Acrobat.
Here's the LMRC USACE SVNF Rev1 _NAE-2024-00583 (1)reduced.pdf for you to review.

Cori Beckwith
Wetlands Analyst
Environmental Services, Highway Division
Ph/ 617-413-4409
massDOT

From: Vasconcelos, Daniel B CIV USARMY CENAE (USA) <Daniel.B.Vasconcelos@usace.army.mil>
Sent: Thursday, March 14, 2024 3:16 PM
To: Beckwith, Corinna (DOT) <corinna.beckwith@dot.state.ma.us>
Cc: Thompson, Kevin S. (DOT) <kevin.s.thompson@dot.state.ma.us>; Mohammadi-Hall, Isabel <IMohammadi-Hall@trccompanies.com>; Cash, Lawrence J. (DOT) <Lawrence.Cash@dot.state.ma.us>; Ringler, Jason <Jason.Ringler@trccompanies.com>; dmccarthy@cityoflawrence.com; Walker, Courtney L. (DOT) <Courtney.L.Walker@dot.state.ma.us>; Lenker, Melissa (DOT) <Melissa.Lenker@dot.state.ma.us>
Subject: RE: SVNF for Lawrence (608930) Lawrence Manchester Rail Trail

CAUTION: This email originated from a sender outside of the Commonwealth of Massachusetts mail system. Do not click on links or open attachments unless you recognize the sender and know the content is safe.

Cori,

Attached please find the Corps “Additional Information Required” letter for the Lawrence Manchester Rail Trail project.

Regards,
Dan

Daniel B. Vasconcelos, PWS
Environmental Scientist/Project Manager
U.S. Army Corps of Engineers
New England District, Regulatory Division
696 Virginia Road
Concord, MA 01742
(978) 318-8653

From: Beckwith, Corinna (DOT) <corinna.beckwith@dot.state.ma.us>

Sent: Wednesday, February 28, 2024 11:15 AM
To: Vasconcelos, Daniel B CIV USARMY CENAE (USA) <Daniel.B.Vasconcelos@usace.army.mil>
Cc: Thompson, Kevin S. (DOT) <kevin.s.thompson@dot.state.ma.us>; Mohammadi-Hall, Isabel <IMohammadi-Hall@trccompanies.com>; Cash, Lawrence J. (DOT) <Lawrence.Cash@dot.state.ma.us>
Subject: [Non-DoD Source] SVNF for Lawrence (608930) Lawrence Manchester Rail Trail

Hello Dan,

We wish to file an SVNF for the above project which will be constructed by a MassDOT contractor, in coordination with the municipality (who signed this application).

The project is a Federal Aid Project using CMAQ (Congestion Mitigation and Air Quality) Funding primarily.

We previously discussed this project in person, which includes a large isolated wetland in the middle of it near Lowell St. The entire corridor is an abandoned railroad right-of-way. The bulk of the impacts are temporary invasive plant controls and the permanent fill is located directly underneath the Lowell Street bridge. There are no surface connections of any kind to Waters of the US.

Please forward the invite to your secure FTP site, so that I may upload the document.

Thank you

Cori Beckwith

Wetlands Analyst

Environmental Services, Highway Division

Ph/ 617-413-4409

massDOT

THIS PAGE IS INTENTIONALLY LEFT BLANK

DOCUMENT A00860

MASSACHUSETTS

DEPARTMENT OF ENVIRONMENTAL PROTECTION

NOTICE OF INTENT

THIS PAGE INTENTIONALLY LEEFT BLANK

Notice of Intent

Lawrence Conservation Commission

August 2023

Lawrence Manchester Rail Corridor (LMRC) Rail Trail

Prepared For:
City of Lawrence
200 Common St.
Lawrence, MA 01840

Prepared By:

TRC Environmental Corporation
650 Suffolk St.
Suite 200
Lowell, MA 01854

August 25, 2023

Mr. Tennis Lilly, Chair
City of Lawrence Conservation Commission
City Hall
200 Common Street
Lawrence, Massachusetts 01840

RE: Lawrence Manchester Rail Corridor (LMRC) Rail Trail
Notice of Intent

Dear Mr. Lilly and Conservation Commission Members:

On behalf of The City of Lawrence, TRC Environmental Corporation (TRC) is pleased to submit the enclosed Notice of Intent (NOI) for the Lawrence Manchester Rail Corridor (LMRC) Rail Trail (Project) located along a certain section of the former Manchester-Lawrence railroad right-of-way (ROW). The City of Lawrence is proposing the construction of a multi-modal recreational trail along the LMRC. The purpose of this Project is to provide an alternate transportation route, connecting to the City of Methuen rail trail and the regional trail network. Project development has been a collaborative effort between the City of Lawrence and the Massachusetts Department of Transportation (MassDOT) who is responsible for Project funding (MassDOT Project No.: 608930) through the 2024 Transportation Improvement Program for the Merrimack Valley Metropolitan Planning Organization.

The parcels on which the Project is proposed is an inactive right-of-way (ROW) owned by the Massachusetts Bay Transportation Authority (MBTA) and subject to a lease agreement between the City of Lawrence and MBTA This NOI is being filed with the City of Lawrence Conservation Commission (LCC) pursuant to the Massachusetts Wetland Protection Act (WPA; M.G.L. Ch. 131, § 40) and its Regulations (310 CMR 10.00). As an agency of the Commonwealth providing essential governmental functions, MassDOT is exempt from municipal bylaws and policies including the City of Lawrence Wetland Protection Ordinance (WPO).

We trust that the enclosed information meets the requirements of the LCC to issue an Order of Conditions for the proposed Project and appreciate your review of this information. If you should have any questions about this NOI, please do not hesitate to contact me at 781-419-7705 or via email at WChapman@trccompanies.com.

Sincerely,

TRC Environmental Corporation

William M. Chapman
Senior Director

Cc: MassDEP Northeastern Regional Office

TABLE OF CONTENTS

WPA FORM 3 – NOTICE OF INTENT

FILING FEE DOCUMENTATION

ATTACHMENT A – Project Narrative

1.0 INTRODUCTION....1

2.0 SITE DESCRIPTION AND EXISTING CONDITIONS....2

2.1 Jurisdictional Resource Areas....3

2.1.1 Bordering Vegetated Wetland....4

2.1.2 Isolated Vegetative Wetland....4

2.1.3 Bank....4

2.1.4 Land Under Waterbodies and Waterways....4

2.1.5 Bordering Land Subject to Flooding....4

2.1.6 Riverfront Area....5

2.1.7 Buffer Zones....5

2.1.8 Lawrence Wetland Ordinance Resource Areas....5

2.1.9 Areas of Critical Environmental Concern....5

2.1.10 Coldwater Fisheries Resources....5

2.1.11 Vernal Pools and Outstanding Resource Waters....5

2.1.12 Rare Species....6

3.0 PROPOSED PROJECT DESCRIPTION....6

3.1 Work Descriptions....7

3.1.1 In-Water Work....7

3.1.2 Vegetation Removal....7

3.1.3 Equipment Mobilization....7

3.1.4 Track Removal, Paving, and Trail Installation....7

4.0 PROJECT IMPACTS AND PERFORMANCE STANDARDS....8

4.1 Alternatives Analysis....8

4.2 Riverfront Area Performance Standards....9

4.3 Bordering Vegetated Wetland Performance Standards....10

4.4 Bordering Land Subject to Flooding Performance Standards....10

4.5 Land Under Water....10

4.6 Buffer Zone....11

4.7 Isolated Vegetative Wetland....11

4.8 Rare Species 11
4.9 Stormwater Management 11
5.0 CONSTRUCTION BEST MANAGEMENT PRACTICES 14
6.0 INVASIVE PLANT MANAGEMENT 14
7.0 WETLAND RESTORATION AND MITIGATION 14
8.0 SITE STABILIZATION AND RESTORATION 15
9.0 ADDITIONAL REGULATORY INFORMATION 15

ATTACHMENTS
ATTACHMENT B – Site Locus & Permitting Plans
ATTACHMENT C – Alternative Transportation Corridor Lease Agreement
ATTACHMENT D – Wetland Delineation Report & Wetland Revisions
ATTACHMENT E – MESA and USFWS Correspondence
ATTACHMENT F – Stormwater Report

WPA FORM 3 – NOTICE OF INTENT

Massachusetts Department of Environmental Protection
Bureau of Resource Protection - Wetlands

WPA Form 3 – Notice of Intent

Massachusetts Wetlands Protection Act M.G.L. c. 131, §40

Provided by MassDEP:

MassDEP File Number

Document Transaction Number

Lawrence
City/Town

Important: When filling out forms on the computer, use only the tab key to move your cursor - do not use the return key.

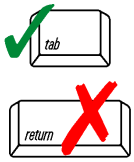

Note: Before completing this form consult your local Conservation Commission regarding any municipal bylaw or ordinance.

A. General Information

1. Project Location (**Note:** electronic filers will click on button to locate project site):

Former Manchester-Lawrence railroad ROW from Merrimack St. to Lawrence/Methuen line
a. Street Address

Lawrence
b. City/Town

01840
c. Zip Code

Latitude and Longitude:

42.70622
d. Latitude

-71.17149
e. Longitude

144, 167, 212, 122
f. Assessors Map/Plat Number

29, 4, 2, 65, 2, 24, 19
g. Parcel /Lot Number

2. Applicant:

Daniel
a. First Name

McCarthy
b. Last Name

City of Lawrence
c. Organization

200 Common Street
d. Street Address

Lawrence
e. City/Town

MA
f. State

01840
g. Zip Code

(978) 620-3505
h. Phone Number

i. Fax Number

dmccarthy@cityoflawrence.com
j. Email Address

3. Property owner (required if different from applicant): ☐ Check if more than one owner

a. First Name

b. Last Name

Massachusetts Bay Transportation Authority
c. Organization

10 Park Plaza
d. Street Address

Boston
e. City/Town

MA
f. State

02116
g. Zip Code

h. Phone Number

i. Fax Number

j. Email address

4. Representative (if any):

William
a. First Name

Chapman
b. Last Name

TRC
c. Company

404 Wyman Street, Suite 375
d. Street Address

Waltham
e. City/Town

MA
f. State

02145
g. Zip Code

781-419-7705
h. Phone Number

i. Fax Number

wchapman@trccompanies.com
j. Email address

5. Total WPA Fee Paid (from NOI Wetland Fee Transmittal Form):

N/A
a. Total Fee Paid

N/A
b. State Fee Paid

N/A
c. City/Town Fee Paid

Massachusetts Department of Environmental Protection
Bureau of Resource Protection - Wetlands

WPA Form 3 – Notice of Intent

Massachusetts Wetlands Protection Act M.G.L. c. 131, §40

Provided by MassDEP:

MassDEP File Number

Document Transaction Number

Lawrence
City/Town

A. General Information (continued)

6. General Project Description:

Conversion of a segment of the former Manchester-Lawerence Railroad right-of-way into a public rail trail

7a. Project Type Checklist: (Limited Project Types see Section A. 7b.)

1. ☐ Single Family Home
2. ☐ Residential Subdivision
3. ☐ Commercial/Industrial
4. ☐ Dock/Pier
5. ☐ Utilities
6. ☐ Coastal engineering Structure
7. ☐ Agriculture (e.g., cranberries, forestry)
8. ☐ Transportation
9. ☒ Other

7b. Is any portion of the proposed activity eligible to be treated as a limited project (including Ecological Restoration Limited Project) subject to 310 CMR 10.24 (coastal) or 310 CMR 10.53 (inland)?

1. ☒ Yes ☒ No If yes, describe which limited project applies to this project. (See 310 CMR 10.24 and 10.53 for a complete list and description of limited project types)

310 CMR 10.53(6) Construction a multi-modal recreational trail in riverfront area
2. Limited Project Type

If the proposed activity is eligible to be treated as an Ecological Restoration Limited Project (310 CMR10.24(8), 310 CMR 10.53(4)), complete and attach Appendix A: Ecological Restoration Limited Project Checklist and Signed Certification.

8. Property recorded at the Registry of Deeds for:

Essex: N/A - ROW (MBTA)
a. County

b. Certificate # (if registered land)

c. Book

d. Page Number

B. Buffer Zone & Resource Area Impacts (temporary & permanent)

1. ☐ Buffer Zone Only – Check if the project is located only in the Buffer Zone of a Bordering Vegetated Wetland, Inland Bank, or Coastal Resource Area.
2. ☒ Inland Resource Areas (see 310 CMR 10.54-10.58; if not applicable, go to Section B.3, Coastal Resource Areas).

Check all that apply below. Attach narrative and any supporting documentation describing how the project will meet all performance standards for each of the resource areas altered, including standards requiring consideration of alternative project design or location.

Massachusetts Department of Environmental Protection
Bureau of Resource Protection - Wetlands

WPA Form 3 – Notice of Intent

Massachusetts Wetlands Protection Act M.G.L. c. 131, §40

Provided by MassDEP:

MassDEP File Number

Document Transaction Number

Lawrence
City/Town

B. Buffer Zone & Resource Area Impacts (temporary & permanent) (cont'd)

For all projects affecting other Resource Areas, please attach a narrative explaining how the resource area was delineated.

Resource Area	Size of Proposed Alteration	Proposed Replacement (if any)
a. ☐ Bank	1. linear feet	2. linear feet
b. ☐ Bordering Vegetated Wetland	1. square feet	2. square feet
c. ☐ Land Under Waterbodies and Waterways	1. square feet 3. cubic yards dredged	2. square feet

Resource Area	Size of Proposed Alteration	Proposed Replacement (if any)
d. ☐ Bordering Land Subject to Flooding	1. square feet	2. square feet
	3. cubic feet of flood storage lost	4. cubic feet replaced
e. ☐ Isolated Land Subject to Flooding	1. square feet	
	2. cubic feet of flood storage lost	3. cubic feet replaced
f. ☒ Riverfront Area	Merrimack River and Spicket River (all inland) 1. Name of Waterway (if available) - **specify coastal or inland**	

2. Width of Riverfront Area (check one):

☒ 25 ft. - Designated Densely Developed Areas only

☐ 100 ft. - New agricultural projects only

☐ 200 ft. - All other projects

3. Total area of Riverfront Area on the site of the proposed project: 3,391 square feet

4. Proposed alteration of the Riverfront Area:

a. total square feet	b. square feet within 100 ft.	c. square feet between 100 ft. and 200 ft.
1,667 (perm) 1,724 (temp)	1,667 (perm)	0

5. Has an alternatives analysis been done and is it attached to this NOI? ☒ Yes ☐ No

6. Was the lot where the activity is proposed created prior to August 1, 1996? ☒ Yes ☐ No

3. ☐ Coastal Resource Areas: (See 310 CMR 10.25-10.35)

Note: for coastal riverfront areas, please complete **Section B.2.f**. above.

Massachusetts Department of Environmental Protection
Bureau of Resource Protection - Wetlands

WPA Form 3 – Notice of Intent

Massachusetts Wetlands Protection Act M.G.L. c. 131, §40

Provided by MassDEP:

MassDEP File Number

Document Transaction Number

Lawrence
City/Town

B. Buffer Zone & Resource Area Impacts (temporary & permanent) (cont'd)

Check all that apply below. Attach narrative and supporting documentation describing how the project will meet all performance standards for each of the resource areas altered, including standards requiring consideration of alternative project design or location.

Online Users: Include your document transaction number (provided on your receipt page) with all supplementary information you submit to the Department.

Resource Area	Size of Proposed Alteration	Proposed Replacement (if any)
a. ☐ Designated Port Areas	Indicate size under Land Under the Ocean, below	
b. ☐ Land Under the Ocean	1. square feet 2. cubic yards dredged	
c. ☐ Barrier Beach	Indicate size under Coastal Beaches and/or Coastal Dunes below	
d. ☐ Coastal Beaches	1. square feet	2. cubic yards beach nourishment
e. ☐ Coastal Dunes	1. square feet	2. cubic yards dune nourishment

Resource Area	Size of Proposed Alteration	Proposed Replacement (if any)
f. ☐ Coastal Banks	1. linear feet	
g. ☐ Rocky Intertidal Shores	1. square feet	
h. ☐ Salt Marshes	1. square feet	2. sq ft restoration, rehab., creation
i. ☐ Land Under Salt Ponds	1. square feet 2. cubic yards dredged	
j. ☐ Land Containing Shellfish	1. square feet	
k. ☐ Fish Runs	Indicate size under Coastal Banks, inland Bank, Land Under the Ocean, and/or inland Land Under Waterbodies and Waterways, above 1. cubic yards dredged	
l. ☐ Land Subject to Coastal Storm Flowage	1. square feet	

4. ☐ Restoration/Enhancement

If the project is for the purpose of restoring or enhancing a wetland resource area in addition to the square footage that has been entered in Section B.2.b or B.3.h above, please enter the additional amount here.

a. square feet of BVW

b. square feet of Salt Marsh

5. ☒ Project Involves Stream Crossings

0
a. number of new stream crossings

0
b. number of replacement stream crossings

Massachusetts Department of Environmental Protection
Bureau of Resource Protection - Wetlands

WPA Form 3 – Notice of Intent

Massachusetts Wetlands Protection Act M.G.L. c. 131, §40

Provided by MassDEP:

MassDEP File Number

Document Transaction Number

Lawrence
City/Town

C. Other Applicable Standards and Requirements

☐ This is a proposal for an Ecological Restoration Limited Project. Skip Section C and complete Appendix A: Ecological Restoration Limited Project Checklists – Required Actions (310 CMR 10.11).

Streamlined Massachusetts Endangered Species Act/Wetlands Protection Act Review

1. Is any portion of the proposed project located in **Estimated Habitat of Rare Wildlife** as indicated on the most recent Estimated Habitat Map of State-Listed Rare Wetland Wildlife published by the Natural Heritage and Endangered Species Program (NHESP)? To view habitat maps, see the *Massachusetts Natural Heritage Atlas* or go to http://maps.massgis.state.ma.us/PRI_EST_HAB/viewer.htm.

   a. ☒ Yes ☐ No

   If yes, include proof of mailing or hand delivery of NOI to:

   Natural Heritage and Endangered Species Program
   Division of Fisheries and Wildlife
   1 Rabbit Hill Road
   Westborough, MA 01581

   August 2021
   b. Date of map

   If *yes*, the project is also subject to Massachusetts Endangered Species Act (MESA) review (321 CMR 10.18). To qualify for a streamlined, 30-day, MESA/Wetlands Protection Act review, please complete Section C.1.c, and include requested materials with this Notice of Intent (NOI); *OR* complete Section C.2.f, if applicable. *If MESA supplemental information is not included with the NOI, by completing Section 1 of this form, the NHESP will require a separate MESA filing which may take up to 90 days to review (unless noted exceptions in Section 2 apply, see below).*

   c. Submit Supplemental Information for Endangered Species Review*

      1. ☒ Percentage/acreage of property to be altered:

         (a) within wetland Resource Area — 0 (percentage/acreage)

         (b) outside Resource Area — 0 (percentage/acreage)

      2. ☐ Assessor's Map or right-of-way plan of site

2. ☒ Project plans for entire project site, including wetland resource areas and areas outside of wetlands jurisdiction, showing existing and proposed conditions, existing and proposed tree/vegetation clearing line, and clearly demarcated limits of work **

   (a) ☒ Project description (including description of impacts outside of wetland resource area & buffer zone)

   (b) ☒ Photographs representative of the site

* Some projects **not** in Estimated Habitat may be located in Priority Habitat, and require NHESP review (see https://www.mass.gov/ma-endangered-species-act-mesa-regulatory-review).
Priority Habitat includes habitat for state-listed plants and strictly upland species not protected by the Wetlands Protection Act.
** MESA projects may not be segmented (321 CMR 10.16). The applicant must disclose full development plans even if such plans are not required as part of the Notice of Intent process.

Massachusetts Department of Environmental Protection
Bureau of Resource Protection - Wetlands

WPA Form 3 – Notice of Intent

Massachusetts Wetlands Protection Act M.G.L. c. 131, §40

Provided by MassDEP:

MassDEP File Number

Document Transaction Number

Lawrence
City/Town

C. Other Applicable Standards and Requirements (cont'd)

(c) ☒ MESA filing fee (fee information available at https://www.mass.gov/how-to/how-to-file-for-a-mesa-project-review).
Make check payable to "Commonwealth of Massachusetts - NHESP" and ***mail to NHESP*** at above address

*Projects altering **10 or more acres** of land, also submit:*

(d) ☐ Vegetation cover type map of site

(e) ☐ Project plans showing Priority & Estimated Habitat boundaries

(f) OR Check One of the Following

1. ☐ Project is exempt from MESA review.
Attach applicant letter indicating which MESA exemption applies. (See 321 CMR 10.14, https://www.mass.gov/service-details/exemptions-from-review-for-projectsactivities-in-priority-habitat; the NOI must still be sent to NHESP if the project is within estimated habitat pursuant to 310 CMR 10.37 and 10.59.)

2. ☐ Separate MESA review ongoing. a. NHESP Tracking # b. Date submitted to NHESP

3. ☐ Separate MESA review completed.
Include copy of NHESP "no Take" determination or valid Conservation & Management Permit with approved plan.

3. For coastal projects only, is any portion of the proposed project located below the mean high water line or in a fish run?

a. ☒ Not applicable – project is in inland resource area only b. ☐ Yes ☐ No

If yes, include proof of mailing, hand delivery, or electronic delivery of NOI to either:

South Shore - Cohasset to Rhode Island border, and the Cape & Islands:

Division of Marine Fisheries -
Southeast Marine Fisheries Station
Attn: Environmental Reviewer
836 South Rodney French Blvd.
New Bedford, MA 02744
Email: dmf.envreview-south@mass.gov

North Shore - Hull to New Hampshire border:

Division of Marine Fisheries -
North Shore Office
Attn: Environmental Reviewer
30 Emerson Avenue
Gloucester, MA 01930
Email: dmf.envreview-north@mass.gov

Also if yes, the project may require a Chapter 91 license. For coastal towns in the Northeast Region, please contact MassDEP's Boston Office. For coastal towns in the Southeast Region, please contact MassDEP's Southeast Regional Office.

c. ☐ Is this an aquaculture project? d. ☐ Yes ☐ No

If yes, include a copy of the Division of Marine Fisheries Certification Letter (M.G.L. c. 130, § 57).

Massachusetts Department of Environmental Protection
Bureau of Resource Protection - Wetlands

WPA Form 3 – Notice of Intent

Massachusetts Wetlands Protection Act M.G.L. c. 131, §40

Provided by MassDEP:

MassDEP File Number

Document Transaction Number

Lawrence
City/Town

C. Other Applicable Standards and Requirements (cont'd)

Online Users: Include your document transaction number (provided on your receipt page) with all supplementary information you submit to the Department.

4. Is any portion of the proposed project within an Area of Critical Environmental Concern (ACEC)?

   a. ☐ Yes ☒ No If yes, provide name of ACEC (see instructions to WPA Form 3 or MassDEP Website for ACEC locations). **Note:** electronic filers click on Website.

   b. ACEC

5. Is any portion of the proposed project within an area designated as an Outstanding Resource Water (ORW) as designated in the Massachusetts Surface Water Quality Standards, 314 CMR 4.00?

   a. ☐ Yes ☒ No

6. Is any portion of the site subject to a Wetlands Restriction Order under the Inland Wetlands Restriction Act (M.G.L. c. 131, § 40A) or the Coastal Wetlands Restriction Act (M.G.L. c. 130, § 105)?

   a. ☐ Yes ☒ No

7. Is this project subject to provisions of the MassDEP Stormwater Management Standards?

   a. ☒ Yes. Attach a copy of the Stormwater Report as required by the Stormwater Management Standards per 310 CMR 10.05(6)(k)-(q) and check if:

      1. ☐ Applying for Low Impact Development (LID) site design credits (as described in Stormwater Management Handbook Vol. 2, Chapter 3)

      2. ☒ A portion of the site constitutes redevelopment

      3. ☐ Proprietary BMPs are included in the Stormwater Management System.

   b. ☐ No. Check why the project is exempt:

      1. ☐ Single-family house

      2. ☐ Emergency road repair

      3. ☐ Small Residential Subdivision (less than or equal to 4 single-family houses or less than or equal to 4 units in multi-family housing project) with no discharge to Critical Areas.

D. Additional Information

☐ This is a proposal for an Ecological Restoration Limited Project. Skip Section D and complete Appendix A: Ecological Restoration Notice of Intent – Minimum Required Documents (310 CMR 10.12).

Applicants must include the following with this Notice of Intent (NOI). See instructions for details.

Online Users: Attach the document transaction number (provided on your receipt page) for any of the following information you submit to the Department.

1. ☒ USGS or other map of the area (along with a narrative description, if necessary) containing sufficient information for the Conservation Commission and the Department to locate the site. (Electronic filers may omit this item.)

2. ☒ Plans identifying the location of proposed activities (including activities proposed to serve as a Bordering Vegetated Wetland [BVW] replication area or other mitigating measure) relative to the boundaries of each affected resource area.

Massachusetts Department of Environmental Protection
Bureau of Resource Protection - Wetlands

WPA Form 3 – Notice of Intent

Massachusetts Wetlands Protection Act M.G.L. c. 131, §40

Provided by MassDEP:

MassDEP File Number

Document Transaction Number

Lawrence
City/Town

D. Additional Information (cont'd)

3. ☒ Identify the method for BVW and other resource area boundary delineations (MassDEP BVW Field Data Form(s), Determination of Applicability, Order of Resource Area Delineation, etc.), and attach documentation of the methodology.

4. ☒ List the titles and dates for all plans and other materials submitted with this NOI.

Lawerence Manchester Rail Corridor (LMRC) Rail Trail
Lowell Street Bridge No. L-04-027

The Engineering Corp. (TEC)	Lauren Nicholson, P.E., August 23, 2023
b. Prepared By	c. Signed and Stamped by
08/16/2023	varies
d. Final Revision Date	e. Scale

f. Additional Plan or Document Title — g. Date

5. ☐ If there is more than one property owner, please attach a list of these property owners not listed on this form.

6. ☒ Attach proof of mailing for Natural Heritage and Endangered Species Program, if needed.

7. ☐ Attach proof of mailing for Massachusetts Division of Marine Fisheries, if needed.

8. ☒ Attach NOI Wetland Fee Transmittal Form

9. ☒ Attach Stormwater Report, if needed.

E. Fees

1. ☒ Fee Exempt: No filing fee shall be assessed for projects of any city, town, county, or district of the Commonwealth, federally recognized Indian tribe housing authority, municipal housing authority, or the Massachusetts Bay Transportation Authority.

Applicants must submit the following information (in addition to pages 1 and 2 of the NOI Wetland Fee Transmittal Form) to confirm fee payment:

N/A	
2. Municipal Check Number	3. Check date
N/A	
4. State Check Number	5. Check date
N/A	
6. Payor name on check: First Name	7. Payor name on check: Last Name

Massachusetts Department of Environmental Protection
Bureau of Resource Protection - Wetlands

WPA Form 3 – Notice of Intent

Massachusetts Wetlands Protection Act M.G.L. c. 131, §40

Provided by MassDEP:

MassDEP File Number

Document Transaction Number

Lawrence
City/Town

F. Signatures and Submittal Requirements

I hereby certify under the penalties of perjury that the foregoing Notice of Intent and accompanying plans, documents, and supporting data are true and complete to the best of my knowledge. I understand that the Conservation Commission will place notification of this Notice in a local newspaper at the expense of the applicant in accordance with the wetlands regulations, 310 CMR 10.05(5)(a).

I further certify under penalties of perjury that all abutters were notified of this application, pursuant to the requirements of M.G.L. c. 131, § 40. Notice must be made by Certificate of Mailing or in writing by hand delivery or certified mail (return receipt requested) to all abutters within 100 feet of the property line of the project location.

Daniel J. McCarthy for City of Lawrence — 1. Signature of Applicant

8/25/2023 — 2. Date

3. Signature of Property Owner (if different)

4. Date

5. Signature of Representative (if any)

8/28/2023 — 6. Date

For Conservation Commission:
Two copies of the completed Notice of Intent (Form 3), including supporting plans and documents, two copies of the NOI Wetland Fee Transmittal Form, and the city/town fee payment, to the Conservation Commission by certified mail or hand delivery.

For MassDEP:
One copy of the completed Notice of Intent (Form 3), including supporting plans and documents, one copy of the NOI Wetland Fee Transmittal Form, and a **copy** of the state fee payment to the MassDEP Regional Office (see Instructions) by certified mail or hand delivery.

Other:
If the applicant has checked the "yes" box in any part of Section C, Item 3, above, refer to that section and the Instructions for additional submittal requirements.

The original and copies must be sent simultaneously. Failure by the applicant to send copies in a timely manner may result in dismissal of the Notice of Intent.

Massachusetts Department of Environmental Protection
Bureau of Resource Protection - Wetlands

WPA Form 3 – Notice of Intent

Massachusetts Wetlands Protection Act M.G.L. c. 131, §40

Provided by MassDEP:

MassDEP File Number

Document Transaction Number

Lawrence
City/Town

F. Signatures and Submittal Requirements

I hereby certify under the penalties of perjury that the foregoing Notice of Intent and accompanying plans, documents, and supporting data are true and complete to the best of my knowledge. I understand that the Conservation Commission will place notification of this Notice in a local newspaper at the expense of the applicant in accordance with the wetlands regulations, 310 CMR 10.05(5)(a).

I further certify under penalties of perjury that all abutters were notified of this application, pursuant to the requirements of M.G.L. c. 131, § 40. Notice must be made by Certificate of Mailing or in writing by hand delivery or certified mail (return receipt requested) to all abutters within 100 feet of the property line of the project location.

1. Signature of Applicant	2. Date
3. Signature of Property Owner (if different)	4. Date
5. Signature of Representative (if any)	6. Date

For Conservation Commission:
Two copies of the completed Notice of Intent (Form 3), including supporting plans and documents, two copies of the NOI Wetland Fee Transmittal Form, and the city/town fee payment, to the Conservation Commission by certified mail or hand delivery.

For MassDEP:
One copy of the completed Notice of Intent (Form 3), including supporting plans and documents, one copy of the NOI Wetland Fee Transmittal Form, and a **copy** of the state fee payment to the MassDEP Regional Office (see Instructions) by certified mail or hand delivery.

Other:
If the applicant has checked the “yes” box in any part of Section C, Item 3, above, refer to that section and the Instructions for additional submittal requirements.

The original and copies must be sent simultaneously. Failure by the applicant to send copies in a timely manner may result in dismissal of the Notice of Intent.

FILING FEE DOCUMENTATION

Enter your transmittal number → X289888 (Transmittal Number)

Your unique Transmittal Number can be accessed online:
https://www.mass.gov/service-details/transmittal-form-number-for-massdep-permit-application-payment

Massachusetts Department of Environmental Protection

Transmittal Form for Permit Application and Payment

1. Please type or print. A separate Transmittal Form must be completed for each permit application.

2. Make your check payable to the Commonwealth of Massachusetts and mail it with a copy of this form to: MassDEP, P.O. Box 4062, Boston, MA 02211.

3. Three copies of this form will be needed.

Copy 1 - the original must accompany your permit application. **Copy 2** must accompany your fee payment. **Copy 3** should be retained for your records

4. Both fee-paying and exempt applicants must mail a copy of this transmittal form to:

MassDEP
P.O. Box 4062
Boston, MA 02211

*** Note:**
For BWSC Permits, enter the LSP.

A. Permit Information

1. Permit Code: 4-to-7-character code from permit instructions	2. Name of Permit Category
	WPA-Notice of Intent

3. Type of Project or Activity: Construction of recreational trail

B. Applicant Information – Firm or Individual

1. Name of Firm - Or, if party needing this approval is an individual enter name below: City of Lawrence

2. **Last Name** of Individual	3. **First Name** of Individual	4. MI
McCarthy	Daniel	

5. Street Address: 200 Common Street

6. City/Town	7. State	8. Zip Code	9. Telephone #	10. Ext. #
Lawrence	MA	01840	(978) 620-3505	

11. Contact Person	12. e-mail address
Daniel McCarthy	dmccarthy@cityoflawrence.com

C. Facility, Site or Individual Requiring Approval

1. Name of Facility, Site or Individual

2. Street Address

3. City/Town	4. State	5. Zip Code	6. Telephone #	7. Ext. #

8. DEP Facility Number (if Known)	9. Federal I.D. Number (if Known)	10. BWSC Tracking # (if Known)

D. Application Prepared by (if different from Section B)*

1. Name of Firm or Individual: William Chapman

2. Address: 404 Wyman Street, Suite 375

3. City/Town	4. State	5. Zip Code	6. Telephone #	7. Ext. #
Waltham	MA	02451	(781) 419-7707	

8. Contact Person	9. LSP Number (BWSC Permits only)
William Chapman	

E. Permit - Project Coordination

1. Is this project subject to MEPA review? ☐ yes ☐ no
If yes, enter the project's EOEA file number - assigned when an Environmental Notification Form is submitted to the MEPA unit:

EOEA File Number

F. Amount Due

DEP Use Only

Permit No:

Rec'd Date:

Reviewer:

Special Provisions:

1. ☒ **Fee** Exempt: city, town, county, or district of the Commonwealth; federally recognized Indian tribe housing authority; municipal housing authority; the MBTA; or state agency if fee is $100 or less. *There are no fee exemptions for BWSC permits, regardless of applicant status.*
2. ☐ Hardship Request - payment extensions according to 310 CMR 4.04(3)(c).
3. ☐ Alternative Schedule Project (according to 310 CMR 4.05 and 4.10).
4. ☐ Homeowner (according to 310 CMR 4.02).

Check Number	Dollar Amount	Date

Massachusetts Department of Environmental Protection
Bureau of Resource Protection - Wetlands

NOI Wetland Fee Transmittal Form

Massachusetts Wetlands Protection Act M.G.L. c. 131, §40

Important: When filling out forms on the computer, use only the tab key to move your cursor - do not use the return key.

A. Applicant Information

1. Location of Project:

Former Manchester-Lawrence railroad ROW from Merrimack St. to Lawrence/Methuen line	Lawrence
a. Street Address	b. City/Town
N/A	N/A
c. Check number	d. Fee amount

2. Applicant Mailing Address:

a. First Name	b. Last Name
City of Lawrence	
c. Organization	
200 Common Street	
d. Mailing Address	
Lawrence	MA / 01840
e. City/Town	f. State / g. Zip Code
978-620-3000	
h. Phone Number	i. Fax Number / j. Email Address

3. Property Owner (if different):

a. First Name	b. Last Name
Massachusetts Bay Transportation Authority	
c. Organization	
10 Park Plaza	
d. Mailing Address	
Boston	MA / 02116
e. City/Town	f. State / g. Zip Code
h. Phone Number	i. Fax Number / j. Email Address

B. Fees

To calculate filing fees, refer to the category fee list and examples in the instructions for filling out WPA Form 3 (Notice of Intent).

Fee should be calculated using the following process & worksheet. ***Please see Instructions before filling out worksheet.***

Step 1/Type of Activity: Describe each type of activity that will occur in wetland resource area and buffer zone.

Step 2/Number of Activities: Identify the number of each type of activity.

Step 3/Individual Activity Fee: Identify each activity fee from the six project categories listed in the instructions.

Step 4/Subtotal Activity Fee: Multiply the number of activities (identified in Step 2) times the fee per category (identified in Step 3) to reach a subtotal fee amount. Note: If any of these activities are in a Riverfront Area in addition to another Resource Area or the Buffer Zone, the fee per activity should be multiplied by 1.5 and then added to the subtotal amount.

Step 5/Total Project Fee: Determine the total project fee by adding the subtotal amounts from Step 4.

Step 6/Fee Payments: To calculate the state share of the fee, divide the total fee in half and subtract $12.50. To calculate the city/town share of the fee, divide the total fee in half and add $12.50.

Massachusetts Department of Environmental Protection
Bureau of Resource Protection - Wetlands

NOI Wetland Fee Transmittal Form

Massachusetts Wetlands Protection Act M.G.L. c. 131, §40

B. Fees (continued)

Step 1/Type of Activity	Step 2/Number of Activities	Step 3/Individual Activity Fee	Step 4/Subtotal Activity Fee
2j) Any other activity not in Category 1,3,4,5 or 6	1	$500.00	$0.00 - Fee Exempt
4f) Bridge	1	$1,450.00	$0.00 - Fee Exempt

Step 5/Total Project Fee: $0.00 - Fee Exempt

Step 6/Fee Payments:

Total Project Fee:	$0.00 - Fee Exempt a. Total Fee from Step 5
State share of filing Fee:	$0.00 - Fee Exempt b. 1/2 Total Fee **less $**12.50
City/Town share of filling Fee:	$0.00 - Fee Exempt c. 1/2 Total Fee **plus** $12.50

C. Submittal Requirements

a.) Complete pages 1 and 2 and send with a check or money order for the state share of the fee, payable to the Commonwealth of Massachusetts.

Department of Environmental Protection
Box 4062
Boston, MA 02211

b.) **To the Conservation Commission:** Send the Notice of Intent or Abbreviated Notice of Intent; a **copy** of this form; and the city/town fee payment.

To MassDEP Regional Office (see Instructions): Send a copy of the Notice of Intent or Abbreviated Notice of Intent; a **copy** of this form; and a **copy** of the state fee payment. (E-filers of Notices of Intent may submit these electronically.)

ATTACHMENT A – Project Narrative

1.0 INTRODUCTION

TRC Environmental Corporation (TRC) has prepared this Notice of Intent (NOI), on behalf of the City of Lawrence, for compliance with the Massachusetts Wetlands Protection Act (WPA) (M.G.L. Chapter 131, Section 40) and its associated regulations (310 CMR 10.00). The City of Lawrence is proposing the construction of a multi-modal recreational trail (the Project) along the Lawrence Manchester Rail Corridor (LMRC) in Lawrence, Massachusetts. Refer to Figure 1 (Attachment B) for the regional location of the Project. The Massachusetts Department of Transportation (MassDOT) is responsible for Project funding (MassDOT Project No.: 608930) through the 2024 Transportation Improvement Program for the Merrimack Valley Metropolitan Planning Organization. As an agency of the Commonwealth providing essential governmental functions, MassDOT is exempt from municipal bylaws and policies including the City of Lawrence Wetland Protection Ordinance (WPO).

The parcels on which the Project is proposed is an inactive right-of-way (ROW) owned by the Massachusetts Bay Transportation Authority (MBTA) and subject to a lease agreement (Attachment C) between the City of Lawrence and MBTA. The Project crosses multiple MBTA-owned parcels following the existing railroad bed from the Merrimac River to the Lawrence/Methuen municipal line. The purpose of this Project is to provide an alternate transportation route, connecting to the City of Methuen rail trail and the regional trail network. Project development has been a collaborative effort between the City of Lawrence and MassDOT.

This document quantifies impacts under the WPA. The proposed plans show resource area impacts according to WPA jurisdiction. Mitigation for impacts to and permanent impacts to WPO jurisdictional Isolated Vegetated Wetland (IVW). Additionally, MassDOT is exempt from notifying abutters per the WPA Regulations at 310 CMR 10.05(4).

1.1 Limited Project Status

Per 310 CMR 10.53(6), the issuing authority may issue an Order of Conditions:

> *permitting as a limited project the construction, rehabilitation, and maintenance of footpaths, bikepaths, and other pedestrian or nonmotorized vehicle access to or along riverfront areas but outside other resource areas, provided that adverse impacts from the work are minimized and that the design specifications are commensurate with the projected use and are compatible with the character of the riverfront area. Generally, the width of the access shall not exceed ten feet of pavement, except within an area that is already altered (e.g., railroad beds within rights of way). Access shall not be located in vernal pools or fenced in a manner which would impede the movement of wildlife.*

As described in Section 4 herein, the proposed Project has minimized impacts to Riverfront Area and other resource areas and meets their respective performance standards to the maximum extent practicable. Furthermore, the proposed Project will improve a degraded area (existing railroad bed) while integrating the City of Lawrence into the regional trail network. The proposed work is located outside of vernal pools and will not impede wildlife movement throughout the Site.

2.0 SITE DESCRIPTION AND EXISTING CONDITIONS

The existing railway has been divided into several subcatchment areas consisting of semipervious railway and vegetated landscaped areas along the shoulders of the railway. The corridor varies in width from 50 to 80 feet and is approximately 1.4 miles long. Utility poles and underground fiber-optic cables run the entire length of the corridor.

The proposed trail has been broken into sections as described in the following table and paragraphs:

TRAIL SECTION	SECTION START AND END POINTS	SECTION LENGTH
1	Merrimac Street to Merrimack River	370 feet
2	Merrimack River to Broadway/Water Street Intersection	690 feet
3	Water Street to Essex Street Intersection	715 feet
4	Essex Street to Lowell Street	750 feet
5	Lowell Street to Haverhill Street Intersection	775 feet
6	Haverhill Street to Bourgoin Square Park (West Street Park)	1,230 feet
7	Bourgoin Square Park to Manchester Street Intersection	1,150 feet
8	Manchester Street to Methuen City Line	1,400 feet

The first section of the trail from Merrimack Street to the Merrimack River includes the Merrimack Street sidewalk, a bridge over the South Canal, and a 300-foot stretch of railway towards the Merrimack River. Crossing the South Canal is a 70-foot open deck rail bridge with timber ties. There is a single set of railroad tracks through this section. The shoulders of the railway have a small amount of ground cover, the only vegetation being large trees and bushes.

The second section of the corridor consists of the crossing the Merrimack River, the path from the bridge to the sidewalk on Broadway, and the Broadway/Water Street intersection. Crossing the Merrimack River is a 550-foot open deck rail bridge with timber ties. The single set of railroad tracks continues across the bridge. The undeveloped path leading to the Broadway sidewalk is 140 feet long. This section is overgrown with vegetation near the bridge and nearly bare or mulched near the sidewalk. The path, sidewalk, and intersection do not follow the original route of the tracks. There are no railroad tracks in this section of the corridor.

The third section of the corridor is a 715-foot stretch of railway from Water Street to the intersection with Essex Street. There is a single set of tracks running through this section. The majority of this section has been encroached on by neighbor properties, largely for vehicle parking and materials storage, rendering it impervious. The rest of the land is sparsely vegetated.

The fourth section of corridor is the 750-foot stretch from Essex Street to Lowell Street and a 50-foot length underneath the Lowell Street bridge. The majority of this section contains two sets of railroad tracks. The first 280 feet of the corridor is vegetated with well-maintained short grass cover. The next 350 feet of the corridor is covered with tall, unmaintained vegetation. The next 50 feet before the Lowell Street bridge is an Isolated Vegetated Wetland (IVW), which has developed within urbanized swales along the railroad bed.

The fifth section of the corridor is the 775-foot length from Lowell Street bridge to the Haverhill Street Intersection.

The sixth section of the corridor is from Haverhill Street to Bourgoin Square Park (West Street Park). This section is 1,230 feet long with two sets of railroad tracks. Vegetation in this area is overgrown on the northeast side of the tracks and maintained on the southwest side of the tracks, likely by the adjacent property encroaching on the area. One section of the encroachment has left the property vegetated and the other has rendered the land impervious. Past the property encroachments, vegetation becomes more overgrown.

The seventh section of the corridor is from Bourgoin Square Park to the Manchester Street intersection. This section is 1,150 feet long with two sets of tracks. This section is elevated above the adjacent properties and has retaining walls on either side of the corridor. The northeast side of the corridor opens and slopes down to the park. Vegetation continues to be overgrown in most areas.

The eighth and last section of the corridor to be developed is from Manchester Street to the Methuen city line, about 1,400 feet long. This section does not have existing railroad tracks and includes a second path that breaks off to connect to the Spicket River Greenway, approximately 240 feet away from Manchester Street. The corridor is overgrown with vegetation on the shoulders of the path. The main path that connects to the City of Methuen rail trail is much wider than the rest and is relatively clear of overgrown vegetation.

The site is comprised mostly of urban land soils, which is typical for a previously developed industrial site in Lawrence. The remaining portions of the site and surrounding areas are made up of Hinckley loamy sand, Hinkley and Windsor soils, and Udorthents, smoothed. These soils are characterized as well draining and are classified within Hydrologic Soil Group A.

2.1 Jurisdictional Resource Areas

Multiple resource areas, as defined in the WPA and described in the following sections, exist at the Site. In March of 2017, Nover-Armstrong Associates, Inc. (Nover-Armstrong) conducted resource area delineations throughout the Site. Those delineations were further revised in April of 2017 based on a site walk and feedback from the LCC (Attachment D). State jurisdictional resource areas identified on or near the Site include Bordering Vegetated Wetland (BVW); Bank; Land Under Water; (LUW); Bordering Land Subject to Flooding (BLSF); and Riverfront Area.

2.1.1 Bordering Vegetated Wetland

Per 310 CMR 10.55(2), BVW are "*freshwater wetlands which border on creeks, rivers, streams, ponds and lakes*" and "*are areas where the soils are saturated and/or inundated such that they support a predominance of wetland indicator plants."*

Nover-Armstrong identified one area of BVW in proximity to the Site, along the southern Bank of the Spickett River.

2.1.2 Isolated Vegetative Wetland

The identified wetland under the Lowell Street Bridge should not be considered BVW under the WPA because it is isolated in the landscape and does not border on a surface water body, as required under 310 CMR 10.55. In addition, this wetland should not be considered Isolated Land Subject to Flooding under the WPA because it does not meet the volume and depth requirements, pursuant to 310 CMR 10.57.

2.1.3 Bank

Per 310 CMR 10.54(2), Bank is "*the portion of the land surface which normally abuts and confines a water body. It occurs between a water body and a vegetated bordering wetland and adjacent flood plain, or, in the absence of these, it occurs between a water body and an upland*."

Nover-Armstrong identified Bank along perennial streams on the Site in association with the Merrimack River and the Spickett River. Bank also exists on the edges of the North Canal and South Canal.

2.1.4 Land Under Waterbodies and Waterways

Per 310 CMR 10.56(2), Land Under Waterbodies and Waterways (LUW) is "*the land beneath any creek, river, stream, pond or lake*."

LUW exists between the Bank boundaries at water crossings along the Site including the Merrimack River, North Canal, South Canal, and Spicket River.

2.1.5 Bordering Land Subject to Flooding

Per 310 CMR 10.57(2), Bordering Land Subject to Flooding (BLSF) is "*an area with low, flat topography adjacent to and inundated by flood waters rising from creeks, rivers, streams, ponds or lakes. It extends from the banks of these waterways and water bodies; where a BVW occurs, it extends from said wetland.*" The boundary of BLSF is further defined as "*the estimated maximum lateral extent of flood water which will theoretically result from the statistical 100-year frequency storm*" as shown on the most recently available flood profile data prepared for the community by the National Flood Insurance Program (currently administered by the Federal Emergency Management Agency, successor to the U.S. Department of Housing and Urban Development).

BLSF exists within the 100-year floodplain of water crossings adjacent to the projectd including the Merrimack River and Spicket River.

2.1.6 Riverfront Area

Per 310 CMR 10.58(2)(a), Riverfront Area is "*the area of land between a river's mean annual high-water line and a parallel line measured horizontally*."

In accordance with 310 CMR 10.58(2) 3. a., since the Project occurs in the City of Lawrence, Riverfront Area exists within 25 feet of water crossings along the Site including the Merrimack River, North Canal, South Canal, and Spicket River.

2.1.7 Buffer Zones

Per 310 CMR 10.02, a buffer zone extends 100 feet outward from Bank and BVW, whichever abuts the upland portion of the site.

Buffer zone exists within 100 feet of each Bank and BVW within the Project area.

2.1.8 Lawrence Wetland Ordinance Resource Areas

The City of Lawrence Wetlands Protection Ordinance protects additional wetland resource areas, including isolated vegetated wetlands (IVW), isolated lands subject to flooding (ILSF), and intermittent streams. The Ordinance also extends additional jurisdiction to lands within 200 feet of the bank of a river, unless determined otherwise in the regulations.

Nover-Armstrong identified one area of IVW in within the ROW between Lowell Street and Haverhill Street.

2.1.9 Areas of Critical Environmental Concern

According to the latest on-line maps available from MassGIS (Bureau of Geographic Information) in April 2023, the Project Area is not within or near an Areas of Critical Environmental Concern (ACEC).

2.1.10 Coldwater Fisheries Resources

There are no designated Coldwater Fisheries Resources (CFRs) in the vicinity of the proposed Project.

2.1.11 Vernal Pools and Outstanding Resource Waters

According to the latest on-line maps available from MassGIS (Bureau of Geographic Information) in April 2023, there are no potential or certified vernal pools or outstanding resource waters identified in the vicinity of the proposed Project.

2.1.12 Rare Species

As stated in the Massachusetts Endangered Species Act (MESA) Program response letter (Attachment E) pertinent to this Project dated January 5, 2023, the Natural Heritage and Endangered Species Program (NHESP) of the MA Division of Fisheries & Wildlife (the "Division") has identified that this Project site, or portion thereof, is located within Priority Habitat 2154 (PH 2154) and Estimated Habitat 1362 (EH 1362) as indicated in the Massachusetts Natural Heritage Atlas (15th Edition) for the following state-listed rare species that are protected under the Massachusetts Endangered Species Act (MESA) (M.G.L. c. 131A) and its implementing regulations (321 CMR 10.00): the shortnose sturgeon (*Acipenser brevirostrum*) and the Atlantic sturgeon (*Acipenser oxyrinchus*) (NHESP Tracking #23-41576). In addition, the U.S. Fish and Wildlife Service (USFWS) Information for Planning and Consultation (IPaC)tool was consulted. According to the USFWS New England Ecological Service Field Office two species, norther long-eared bat (*Myotis septentrionlis*) and monarch butterfly (*Danaus plexippus*) may present in the proposed Project. Despite the potential species presence, the USFWS indicated no critical habitats are within the Project area (Attachment E).

3.0 PROPOSED PROJECT DESCRIPTION

The proposed construction includes a 12-foot-wide full depth pavement bike path between the South Canal and Merrimack River bridges and from Water Street to the limits of the City of Methuen. Along most of the central corridor a five-foot-wide full depth pavement walking path is proposed alongside and intersecting with the bike path. Concrete gathering areas, benches, and stadium seating is proposed throughout the trail. The Project will impact four existing bridges along the length of the corridor. Attachment B contains a full set of 75% design plans and Attachment F contains a Stormwater Report.

Proposed changes to the first section from Merrimack Street to the Merrimack River are sidewalk repairs, the addition of an Americans with Disabilities Act (ADA) accessible wheelchair ramp, a deck replacement to the South Canal bridge, and the construction of the bike path, concrete seating areas, and landscaped areas. The South Canal bridge is proposed to be a cast in place concrete deck bridge. The second section will also consist of the construction of the bike path, concrete seating areas, and landscaped areas. The Merrimack River bridge is proposed to be a deck replacement with isolated steel repairs with the railroad tracks being removed.

The next two sections of the corridor, Water Street to Essex Street, and Essex Street to Lowell Street, proposes a bike path, landscaped areas, concrete seating areas, rain gardens, and a ramp up to Lowell Street. The Lowell Street bridge is to be fully replaced with a prefabricated arch.

The next section, Lowell Street to Haverhill Street, proposes a bike path, landscaped areas, a concrete seating area, and a conveyance swale. Some railroad tracks will remain. Disturbances to IVW have been minimized the maximum extent practicable and limited to those areas immediately adjacent to track and ballast. The next section, Haverhill Street to Bourgoin Square Park (West Street Park), proposes a bike path, walking path, landscaped areas, concrete seating areas, path connection points, and rain gardens. Most of the railroad tracks will be removed.

The next section, Bourgoin Square Park to Manchester Street, proposes a bike path, walking path, landscaped areas, concrete seating areas, and rain gardens. All railroad tracks will be removed from this section. The Manchester Street bridge repair will consist of a superstructure replacement. The proposed bridge will be a through-girder with a concrete deck. The last section, Manchester Street Bridge to the Methuen Line and the connection to the Spicket River Greenway, proposes a bike path, a wooden safety rail, and concrete stadium seating.

3.1 Work Descriptions

It is anticipated the Project will be constructed in a single phase under the control and oversight of MassDOT who will provide on-site construction administrative and inspection services during the entire construction duration. The City of Lawrence may retain an environmental monitor to oversee construction activities. Long-term operation and maintenance of the multi-modal recreational trail will be the responsibility of the Town.

3.1.1 In-Water Work

There will be no in-water work required for the completion of this Project.

3.1.2 Vegetation Removal

The Project requires limited removal of existing vegetation, including saplings, shrubs, and herbaceous vegetation within the limits of work. The limits of work will be delineated prior to the start of construction. In addition, prior to vegetation removal, the boundaries of wetlands will be clearly marked to prevent unauthorized encroachment.

Should limbs that overhang the limits of work and need to be trimmed to facilitate construction vehicle access and operations, limbs will be cut in a manner to maintain the health of the trees. The design has minimized vegetation removal to the extent practicable by locating the construction platform within the existing rail corridor.

Typical equipment used to clear vegetation may include brush mowing units, a skidder bucket and hand cutting using chainsaws and brush saws will be used as necessary. Following the removal of vegetation, erosion and sediment control measures will be installed.

3.1.3 Equipment Mobilization

The contractor will avoid and minimize resource area impacts to the extent practical by using existing upland areas within the LOD for initial staging of equipment and conducting work activities on construction mats in resource areas to minimize disturbance and compaction of soils.

3.1.4 Track Removal, Paving, and Trail Installation

The conversion of the existing rail bed requires the removal and salvage of the steel rails and removal and disposal off-site of the wooden rail ties and ballast in accordance with applicable requirements. The rail bed will then be graded and leveled using a heavy equipment to a subgrade below the final elevation for use during construction, and stormwater features will be installed. If necessary, stumps and roots will be grubbed during this stage.

4.0 PROJECT IMPACTS AND PERFORMANCE STANDARDS

The proposed Project will result in impacts to jurisdictional resource areas as described in the following table:

RESOURCE AREA	IMPACT (SQUARE FEET)	IMPACT DESCRIPTION
25-foot Riverfront Area (Merrimack and Spickett River)	1,667 Permanent 1,724 Temporary 3,391 Total within Project Area	• Railbed Removal • Excavation and Grading • Paving
Bordering Vegetated Wetland	0	• Not Applicable
Bordering Land Subject to Flooding	0	• Not Applicable
Bank	0 (LF)	• Not Applicable
Land Under Water	0	• Not Applicable
100-foot Buffer Zone	26,424 Permanent 23,764 Temporary	• Railbed Removal • Excavation and Grading • Paving
Isolated Vegetated Wetland	3,391 Permanent 22,621 Temporary	• Railbed Removal • Excavation and Grading • Paving

The proposed Project qualifies as a limited project and the proposed impacts to Riverfront Area, and buffer zone are related to the removal of existing rail bed and construction of the rail trail in its place.

Impacts will be limited to the Project LOD which is restricted as much as possible to the existing railroad ROW. Additionally, sediment and erosion controls will be used to prevent off-site impacts during construction and a stormwater management system will be installed to control runoff and prevent off-site impacts after construction.

4.1 Alternatives Analysis

To avoid and minimize impacts to the maximum extent practicable, the following alternative layouts were considered for the proposed Project:

1. *"No Build" option* – This alternative would result in the applicant not achieving their goal of building a multi-modal recreational trail in Lawrence. Therefore, this is not a feasible alternative.

2. *Perform work only in the upland portions of the Site outside of resource areas* – This alternative would move the rail trail a significant distance from the existing planned route through privately and publicly owned properties or roadways and create a trail that is less safe and less scenic. The additional trail length and necessary property owner permissions would create substantial delays and an economically unviable Project. Therefore, this alternative is not feasible.

3. *Perform work within resource areas using BMPs* – This alternative allows the applicant to perform the work necessary and build the rail trail along the existing railroad ROW according to the Project design and would not require the acquisition of private properties or obstruction of existing roadways. *Therefore, this is the preferred alternative that is presented in this NOI.* The Project is a redevelopment project within a previously developed rail corridor. The proposed permanent impact area of the Project within RFA consists of gravel and paved areas and sidewalks. Areas of temporary impact will be vegetated with a short grassland mix in addition to shrubs and trees.

The LMRC provides an opportunity to utilize an inactive degraded rail corridor into a 1.4-mile multi-modal recreational trail in Lawrence, connecting to the City of Methuen rail trail and the regional trail network. The selected alternative avoids, minimizes, and mitigates impacts while achieving the Project purpose.

4.2 Riverfront Area Performance Standards

Impacts to the 25-foot Riverfront Area are proposed in the form of rail bed removal, excavation, grading, paving, and bridge improvements limited to the width of the existing railroad ROW. While the proposed Project meets performance standards under 310 CMR 10.58(4) as shown below, the Project could also be considered against the less stringent standards for degraded Riverfront Area under 310 CMR 10.58(5) due to the existing abandoned railroad corridor.

PERFORMANCE STANDARDS 310 CMR 10.58(4)	PROJECT'S COMPLIANCE WITH PERFORMANCE STANDARD
(a) Protection of Other Resource Areas. The work shall meet the performance standards for all other resource areas within the riverfront area, as identified in 310 CMR 10.30 (Coastal Bank), 10.32 (Salt Marsh), 10.55 (Bordering Vegetated Wetland), and 10.57 (Land Subject to Flooding). When work in the riverfront area Is also within the buffer zone to another resource area, the performance standards for the riverfront area shall contribute to the protection of the interests of M.G.L. c. 131, § 40 in lieu of any additional requirements that might otherwise be imposed on work in the buffer zone within the riverfront area.	As described in the following sections, the proposed Project meets performance standards for Riverfront Area, BVW, Bank, LUW, and BLSF, jurisdictional areas have been met to the maximum extent practicable. The Project will result in an improvement to the Riverfront Area compared to the existing conditions by reducing the degraded ground cover.

PERFORMANCE STANDARDS 310 CMR 10.58(4)	PROJECT'S COMPLIANCE WITH PERFORMANCE STANDARD
(b) Protection of Rare Species. No project may be permitted within the riverfront area which will have any adverse effect on specified habitat sites of rare wetland or upland, vertebrate or invertebrate species, as identified by the procedures established under 310 CMR 10.59 or 10.37, or which will have any adverse effect on vernal pool habitat certified prior to the filing of the Notice of Intent.	Portions of the Site are located within Priority Habitat 2154 (PH 2154) and Estimated Habitat 1362 (EH 1362) for shortnose sturgeon (*Acipenser brevirostrum*) and Atlantic sturgeon (*Acipenser oxyrinchus*). The habitat of these species is limited to within the LUW resource area, which will not be impacted by the Project due to no in water work. Proper sediment and erosion control BMPs will be used within associated Riverfront Area to protect the adjacent waters. No adverse effects to Priority and Estimated habitat areas are anticipated. While and characterized a urban terrestrial setting, the removal of rail will improve wildlife crossing conditions.
(c) Practicable and Substantially Equivalent Economic Alternatives. There must be no practicable and substantially equivalent economic alternative to the proposed project with less adverse effects on the interests identified in M.G.L. c. 131 § 40.	As previously described in Section 4.1, an alternatives analysis was completed and impacts to the resource areas at the Site have been minimized to the maximum extent practicable.
(d) No Significant Adverse Impact. The work, including proposed mitigation measures, must have no significant adverse impact on the riverfront area to protect the interests identified in M.G.L. c. 131, § 40.	The Riverfront Area is already disturbed by the existing railroad ROW and has been degraded by years of litter and dumping. The Project's proposed impacts will improve the condition of these areas and, therefore; result in no significant adverse impact to Riverfront Area at the Site. No Riverfront Area mitigation are proposed because the degraded area will be less than existing conditions.

4.3 Bordering Vegetated Wetland Performance Standards

No impacts to BVW are proposed.

4.4 Bordering Land Subject to Flooding Performance Standards

No impacts to BLSF or the regulated floodway are proposed. No work will be conducted in the BLSF or floodway.

4.5 Land Under Water

No impacts to LUW are proposed.

4.6 Buffer Zone

While the WPA recognizes the importance of the buffer zone, it does not include specific performance standards. Proposed work within the buffer zone includes rail bed removal, excavation, grading, paving, and bridge improvements and will minimize disturbance to the buffer zone and surrounding areas to the maximum extent practicable. Disturbance will be limited to the width of the existing railroad ROW and sediment/erosion control BMPs will be used to separate work areas from off-site areas. The buffer zone is proposed to be replanted and seeded in temporary impacts locations.

4.7 Isolated Vegetative Wetland

There are no WPA jurisdictional Isolated Vegetative Wetlands (IVW) in the Project Locus Area. The IVW is however jurisdictional under Section 401/Section 404. The impacts are primarily a result of abutments for the Lowell Street Bridge and narrow expansion beyond the ballast between found between Station 39+25 and 47+50.

4.8 Rare Species

The shortnose sturgeon and the Atlantic sturgeon will not be impacted by Project activities because there will be no in-water work. Therefore, there will be no effects to these species involving sound pollution, habitat structure and disturbance, dredging, water quality, prey quantity and quality, vessels, and in-water structures including aquaculture. The critical habitat for the Atlantic sturgeon will not be impacted by Project activities because there will be no in-water work. Therefore, there will be no effects to this critical habitat involving sound pollution, habitat structure and disturbance, dredging, water quality, in-water structures including aquaculture, prey quantity and quality, and the alteration native fish composition. The northern long-eared bat will not be impacted because there are no known winter hibernacula or maternity roost trees within 0.25 mile of the Project according to the NHESP. Finally, the monarch butterfly is mobile species able to relocate to undisturbed habitat and is unlikely to be impacted be construction activities. A review through the Massachusetts Endangered Species Act (MESA) will take place concurrently with this NOI submittal to confirm that rare species will not be adversely affected by the proposed Project.

4.9 Stormwater Management

Since grade changes and new impervious surfaces are proposed, a Stormwater Management Report and Checklist is required and has been included in Attachment F.

The Stormwater Management Plan, which will be implemented as part of this Project, will provide adequate collection, management, and treatment of the stormwater runoff.

Existing and proposed hydrologic conditions were analyzed using HydroCAD, an SCS TR-20 based program, to calculate existing and proposed peak discharge rates. This method considers existing and proposed pervious and impervious areas including soil types and hydrologic classifications. The 2-, 10-, 25- and 100-year storm frequencies were used in the analysis in accordance with the MassDEP and the City of Lawrence's requirements. Proposed conditions will comply with 310 CMR 10.05(6)(m)6 which states that:

10.05(6)(m) The Stormwater Management Standards (SMS) shall apply to the maximum extent practicable to the following:

6. Footpaths, bike paths, and other paths for pedestrian and/or nonmotorized vehicle access.

Infiltration rates used in the HydroCAD analysis comply with the "Dynamic Field" method according to the regulations outlined in the Massachusetts Stormwater Handbook Volume 3, Chapter 1: Documenting Compliance. Infiltration rate was determined to be 50% of the actual in-situ saturated hydraulic conductivity rate as measured by the infiltrometer.

The MassDEP Stormwater Management Policy prescribes ten performance standards for site redevelopment projects. The proposed Project has been designed in accordance with these standards. Compliance with the standards is outlined below.

1. No new stormwater conveyances may discharge untreated stormwater directly to or cause erosion in wetlands or waters of the Commonwealth.

There are no new untreated discharges. The existing drainage patterns will continue as they currently exist today with the addition of rain gardens and the infiltration basin.

2. Stormwater management systems must be designed so that post development peak discharge rates do not exceed pre-development peak discharge rates.

The Project decreases peak discharge rates to the maximum extent practicable. The HydroCAD analysis and output can be found in Attachment F.

3. Loss of annual recharge to groundwater should be minimized through the use of infiltration measures where feasible.

The proposed stormwater management utilizes rain gardens and an infiltration basin to provide groundwater recharge. The required recharge volume is determined based on the additional impervious area associated with the proposed improvements and the classification of the soils on site (Hydrologic Soil Types A and B).

4. For new development, stormwater management systems must be designed to remove 80 percent of Total Suspended Solids.

The proposed stormwater management design will implement BMP's including rain gardens, swales, and an infiltration basin. Stormwater from the Project will achieve 10-25% TSS removal in pretreatment wherever possible. Given the Project is a redevelopment and the limited size of the corridor, the vegetated filter strips, and sediment forebays utilized are the most effective non-structural pretreatment method. Using these pretreatment methods, rain gardens will achieve up to 90% TSS removal and the infiltration basin will achieve 80% TSS removal, which were implemented for several subcatchments.

Water Quality Volume (WQV) The proposed Project is considered a redevelopment project. The redevelopment portion of the site was previously consisted of primarly of pavement and the proposed will increase the impervious area. Under existing conditions,

stormwater either sheet flows over pavement and discharges directly into the IVW or is caught in an isolated drain line before entering resource areas. The Project will significantly improve the quality of stormwater runoff that enters the resource area by providing BMPs such as rain gardens, an infiltration basin, and sediment forebays. Given the proposed Project includes the redevelopment of several existing intersections, roadways, bridges, and AULs achieving water quality improvements via infiltration BMP's is not possible at several locations throughout the proposed corridor. Infiltration BMP's have been added wherever possible throughout the proposed Project area and are utilized to treat approximately 97,294 SF of impervious area.

5. Stormwater discharges from areas with higher potential pollutant loads require the use of specific stormwater management BMPs.

The proposed Project is not considered a LUHPPL according to stipulations written within the Department of Environmental Protection 310 CMR – Wetland Protection Act.

6. Stormwater discharges to critical areas must utilize certain stormwater management BMPs approved for critical areas. Critical areas are Outstanding Resource Waters, shellfish beds, swimming beaches, cold water fisheries and recharge areas for public water supplies.

According to publicly available online resources (MassGIS's Online Mapping Tool) and on-site survey information shows the Project site is not located within critical environmental areas.

7. Redevelopment of previously developed areas must meet the Stormwater Management Standards to the maximum extent practicable.

The Project is considered a redevelopment project due to it being the creation of a bike/walking path through a previously developed portion of Lawrence. The redevelopment will increase impervious area on site but will improve the quality of stormwater runoff that leaves the site and enters the resource areas. The Project has been designed to meet all Stormwater Standards to the maximum extent practicable.

8. Erosion and sediment controls must be implemented to prevent impacts during construction or land disturbance activities.

The Project is over one acre in disturbed area and therefore will require the development of a Stormwater Pollution Prevention Plan prior to the start of construction. The Project has been designed to include erosion and sedimentation controls to prevent impacts to the resource areas. Construction activities will be isolated from downgradient areas by installing erosion control measures including a construction entrance/exit, compost filter socks, silt fences and inlet protection devices.

9. All stormwater management systems must have an operation and maintenance plan to ensure that systems function as designed.

The Project includes a long-term Operation and Maintenance Plan. Refer to Appendix D-O&M Plan for the required procedures, frequencies, costs, and methods associated with the long-term Operations and Maintenance of the proposed drainage system.

10. Illicit Discharges

Only stormwater will be conveyed to the stormwater management system. No illicit materials or connections are permitted.

5.0 CONSTRUCTION BEST MANAGEMENT PRACTICES

While certain work will occur in jurisdictional areas, best management practices (BMPs) will be utilized and temporarily disturbed areas will be restored. Proposed BMPs and mitigation measures are discussed below.

As previously described, the Project will meet the performance standards while working in resource areas. In addition, BMPs that will be implemented at the Site will include:

- Having an Environmental Inspector/Monitor on-site during construction;
- Minimizing permanent disturbance to regulated resources;
- Storm Water Pollution and Protection Plan (SWPPP);
- Using sediment and erosion controls;
- Restoring temporarily altered areas to pre-construction conditions by applying a wetland or upland seed mix and or mulching with straw, if necessary;
- Keeping spill response equipment on-hand and ready for deployment in the event of a spill; and
- Refueling equipment outside the resource areas and buffer zone.

6.0 Invasive Plant Management

Project includes an invasive plant management work activity. The details of invasive plant management, including timing and methodologies, shall prepared by the contractor after a required invasive plant walk/inspection and submitted for approval in the Invasive Plant Management Strategy report to both MassDOT and Lawrence Conservation Commission. Invasive plant management includes work in the IVW.

7.0 Wetland Restoration and Mitigation

Following construction, temporary impact areas within the IVW will be graded, raked, and seeded with MassDOT Mix 765.554 Wetland Seed Seasonal Flooded. Areas of temporary impact within the IVW proposed to be restored are shown on sheets 12 to 13 of the Lawrence Manchester Corridor (LMRC) Rail plan set (Attachment B).

Notwithstanding MassDOT's exemption to local WPO, it is feasible to propose wetland mitigation to mitigate for the permanent impacts to the IVW at a ratio of 1:1. The wetland mitigation area has been at 3,400 square feet. The proposed mitigation is immediately adjacent to the south and north of the IVW in the general area of Station 43+00 to 47+10, and 47+25 to

48+25, respectively. The proposed wetland is a seasonally saturated Palustrine Emergent Wetland (PEM). The proposed wetland mitigation is included on sheets 12 to 13 of the Lawrence Manchester Corridor (LMRC) Rail plan set (Attachment B) and seeding with MassDOT Mix 765.554 Wetland Seed Seasonal Flooded as well as two-inch caliper balled and burlap red maple (*Acer rubrum*) and black gum (*Nyssa sylvatica*).

The wetland restoration and mitigation will be supervised by a wetland scientist hired by the contractor. The goal is for the wetland restoration and mitigation area to have 85 percent coverage of wetland plant species.

8.0 SITE STABILIZATION AND RESTORATION

The Site will be stabilized and revegetated following construction activities and temporary erosion controls will be kept in place until the Site is fully stabilized. For final restoration, disturbed upland resource areas will be mulched and seeded with a conservation seed to be approved by the LCC. The mix will be applied to the disturbed area per the manufacturer's instructions.

9.0 ADDITIONAL REGULATORY INFORMATION

The waters within the Site also fall under the jurisdiction of the Federal Clean Water Act (Section 404) and the Massachusetts Clean Water Act (Section 401). Impacts to wetland areas were review during the alternatives analysis and design. The selected alignment of the Project utilizes a previously developed and degraded railroad corridor. As a result, impacts to previously undeveloped areas have been avoided and no new crossings at Merrimack and Spicket Rivers are proposed.

ATTACHMENT B – Site Locus & Permitting Plans

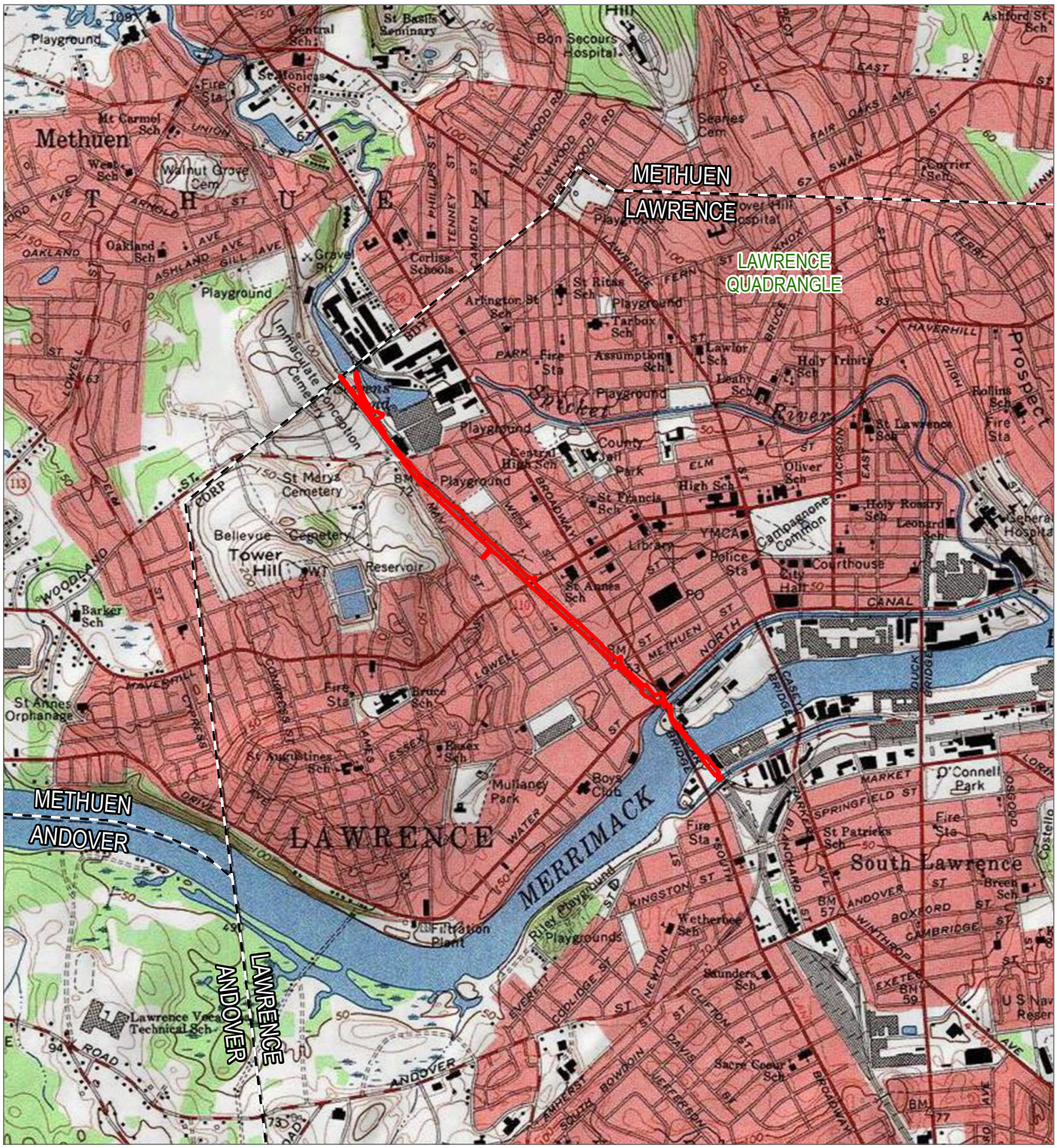

BASE MAP: USA TOPOGRAPHIC MAP, ESRI
DATA SOURCES: TRC

PROJECT:
LAWRENCE RAIL TRAIL

TITLE:
SITE LOCATION MAP
LAWRENCE, MA

DRAWN BY:	S. MOTURI	PROJ. NO.:	274047.0000.0000
CHECKED BY:	R. SPRING		
APPROVED BY:	C. MARTIN		**FIGURE 1**
DATE:	FEBRUARY 2023		

TRC
650 SUFFOLK ST,
WANNALANCIT MILLS,
LOWELL, MA 01854

FILE: LawrenceRailTrail

Coordinate System: NAD 1983 StatePlane Massachusetts Mainland FIPS 2001 Feet: Map Rotation: 0
-- Saved By: SMOTURI on 2/16/2023, 15:32:45 PM: File Path: T:\1-PROJECTS\LMRC\274047_LawrenceRailTrail_MA\2-APRX\LawrenceRailTrail.aprx: Layout Name: Fig1_Site_Location_USGS_8_5x11P

MASSACHUSETTS DEPARTMENT OF TRANSPORTATION
HIGHWAY DIVISION

LAWRENCE
LMRC RAIL TRAIL

STATE	FED. AID PROJ. NO.	SHEET NO.	TOTAL SHEETS
MA	-	1	225
PROJECT FILE NO.	608930		

TITLE SHEET & INDEX

PLAN AND PROFILE OF

LAWRENCE MANCHESTER RAIL CORRIDOR (LMRC) RAIL TRAIL

IN THE CITY OF

LAWRENCE

ESSEX COUNTY

FEDERAL AID PROJECT NO.

NOI SUBMITTAL

THESE PLANS ARE SUPPLEMENTED BY THE OCTOBER 2017 CONSTRUCTION STANDARD DETAILS, THE 2015 OVERHEAD SIGNAL STRUCTURE AND FOUNDATION STANDARD DRAWINGS, MASSDOT TRAFFIC MANAGEMENT PLANS AND DETAIL DRAWINGS, THE 1990 STANDARD DRAWINGS FOR SIGNS AND SUPPORTS, THE 1968 STANDARD DRAWINGS FOR TRAFFIC SIGNALS AND HIGHWAY LIGHTING, AND THE LATEST EDITION OF THE AMERICAN STANDARD FOR NURSERY STOCK.

INDEX

SHEET NO.	DESCRIPTION
1	TITLE SHEET & INDEX
2	LEGEND & ABBREVIATIONS
3	KEY PLAN
4-5	TYPICAL SECTIONS & PAVEMENT NOTES
6-20	CONSTRUCTION PLANS
21-25	PROFILES SHEET 25 OMITTED
26-40	~~CURB TIE & GRADING PLANS~~ OMITTED
42-48	~~TRAFFIC SIGN & PAVEMENT MARKING PLANS~~ OMITTED
49	~~TRAFFIC SIGN SUMMARY~~ OMITTED
50-53	~~TRAFFIC SIGNAL PLANS~~ OMITTED
54-57	~~TEMPORARY TRAFFIC CONTROL PLANS~~ OMITTED
58-72	~~UTILITY PLANS~~ OMITTED
72-86	~~LIGHTING PLANS~~ OMITTED
87-90	~~LIGHTING DETAILS~~ OMITTED
91-123	LANDSCAPE PLANS & DETAILS SHEETS 91-96 & 100-123 OMITTED
124-130	CONSTRUCTION DETAILS SHEETS 127-130 OMITTED
131-137	BRIDGE PLANS - L-04-030
138-149	BRIDGE PLANS - L-04-032
150-155	BRIDGE PLANS - L-04-045
156-160	~~BRIDGE PLANS - L-04-XXX~~ OMITTED
161-225	~~CROSS SECTIONS~~ OMITTED

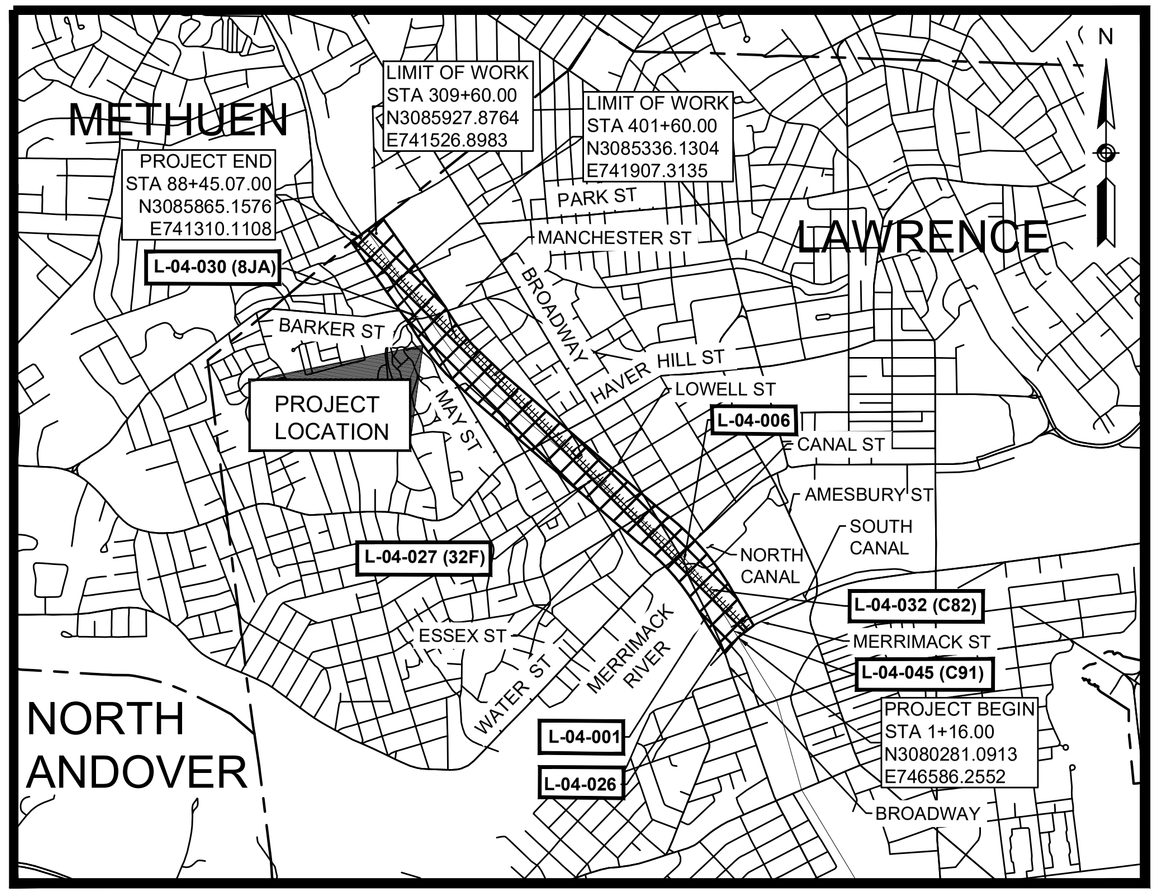

0 1500 3000 4500 6000

SCALE: 1" = 1500'

LENGTH OF PROJECT = 7,900.00 FEET = 1.496 MILES

NOTE: PLANS FOR PERMITTING USE ONLY.

COMMONWEALTH OF MASSACHUSETTS
LAUREN NICHOLSON
CIVIL
No. 56061
PROFESSIONAL ENGINEER

8/16/2023	NOI SUBMITTAL	-
DATE	DESCRIPTION	REV #

TEC The Engineering Corp

282 Merrimack Street, 2nd Floor, Lawrence, MA 01843, 978-794-1792
311 Main Street, 2nd Floor, Worcester, MA 01608, 508-868-5104
169 Ocean Blvd, Unit 3, PO Box 249, Hampton, NH 03842, 603-601-8154

www.TheEngineeringCorp.com

massDOT Massachusetts Department of Transportation Highway Division

APPROVED

CHIEF ENGINEER _____ DATE _____

608930_HDI(TITLE SHEET - NOI).DWG Plotted on 15-Aug-2023 10:24 AM

A00860 - 40

Proposal No. 608930-128034

GENERAL SYMBOLS

EXISTING	PROPOSED	DESCRIPTION
JB	JB	JERSEY BARRIER
CB	CB/GI	CATCH BASIN OR GUTTER INLET
	CBCI/GICI	CATCH BASIN OR GUTTER INLET W/ CURB INLET
FP	FP	FLAG POLE
GP	GP	GAS PUMP
MB	MB	MAIL BOX
		POST SQUARE
		POST CIRCULAR
WELL	WELL	WELL
EHH	EHH	ELECTRIC HANDHOLE
		FENCE GATE POST
GG	GG	GAS GATE
BHL #	BHL #	BORING HOLE
MW #	MW #	MONITORING WELL
TP #	TP #	TEST PIT
		HYDRANT
		LIGHT POLE
CO.BD.		COUNTY BOUND
		GPS POINT
		CABLE MANHOLE
		DRAINAGE MANHOLE
		ELECTRIC MANHOLE
		GAS MANHOLE
		MISC MANHOLE
		SEWER MANHOLE
		TELEPHONE MANHOLE
		WATER MANHOLE
MHB	MHB	MASSACHUSETTS HIGHWAY BOUND
MON		MONUMENT
SB		STONE BOUND
TB		TOWN OR CITY BOUND
		TRAVERSE OR TRIANGULATION STATION
TPL or GUY	TPL or GUY	TROLLEY POLE OR GUY POLE
HTP		TRANSMISSION POLE
UFB	UFB	UTILITY POLE W/ FIREBOX
UPDL	UPDL	UTILITY POLE WITH DOUBLE LIGHT
ULT	ULT	UTILITY POLE W / 1 LIGHT
UPL	UPL	UTILITY POLE
		BUSH
SIZE & TYPE		TREE
		STUMP
		SWAMP / MARSH
WG	WG	WATER GATE
WSO	WSO	WATER SHUTOFF/CURB STOP
PM	PM	PARKING METER
		OVERHEAD CABLE/WIRE
		CURBING
100 99		CONTOURS (ON-THE-GROUND SURVEY DATA)
100 99		CONTOURS (PHOTOGRAMMETRIC DATA)
		UNDERGROUND DRAIN PIPE (DOUBLE LINE 24 INCH AND OVER)
		UNDERGROUND ELECTRIC DUCT (DOUBLE LINE 24 INCH AND OVER)
		UNDERGROUND GAS MAIN (DOUBLE LINE 24 INCH AND OVER)
		UNDERGROUND SEWER MAIN (DOUBLE LINE 24 INCH AND OVER)
		UNDERGROUND TELEPHONE DUCT (DOUBLE LINE 24 INCH AND OVER)
		UNDERGROUND WATER MAIN (DOUBLE LINE 24 INCH AND OVER)
		BALANCED STONE WALL
		GUARD RAIL - STEEL POSTS
		GUARD RAIL - WOOD POSTS
x	x	CHAIN LINK OR METAL FENCE
		WOOD FENCE
		SEDIMENT CONTROL BARRIER
		COIR LOG
		TREE LINE
		LIMIT OF SEEDING
		EDGE OF PAVEMENT
		SAWCUT LINE
		TOP OR BOTTOM OF SLOPE
		LIMIT OF EDGE OF MICROMILLING AND OVERLAY
		BANK OF RIVER OR STREAM
		BORDER OF WETLAND
		100 FT WETLAND BUFFER
		200 FT RIVERFRONT BUFFER
		STATE HIGHWAY LAYOUT
		TOWN OR CITY LAYOUT
		COUNTY LAYOUT
		RAILROAD SIDELINE
		TOWN OR CITY BOUNDARY LINE
		PROPERTY LINE OR APPROXIMATE PROPERTY LINE
		EASEMENT

PAVEMENT MARKINGS SYMBOLS

EXISTING	PROPOSED	DESCRIPTION
		PAVEMENT ARROW - WHITE
ONLY	ONLY	LEGEND "ONLY" - WHITE
		BIKE LANE LEGEND - WHITE
	SL	STOP LINE
	CW	CROSSWALK
	SWL	SOLID WHITE LINE
	SYL	SOLID YELLOW LINE
	BWL	BROKEN WHITE LINE
	BYL	BROKEN YELLOW LINE
	DWL	6" DOTTED WHITE LINE (3' LINE W/ 9' GAP)
	DYL	6" DOTTED YELLOW LINE (3' LINE W/ 9' GAP)
	DWLEx	6" DOTTED WHITE LINE EXTENSION (2' LINE W/ 6' GAP)
	DYLEx	6" DOTTED YELLOW LINE EXTENSION (2' LINE W/ 6' GAP)
	DBWL	DOUBLE WHITE LINE
	DBYL	DOUBLE YELLOW LINE
	YGL	12" YELLOW GORE LINE (3:1, 10' O.C.)

TRAFFIC SYMBOLS

EXISTING	PROPOSED	DESCRIPTION
		CONTROLLER CABINET, FOUNDATION
		CONTROLLER CABINET, FOUNDATION, CONC. PAD
		MAST ARM FOUNDATION (SCALE OF BLOCK = DIAMETER IN INCHES)
		MAST ARM (LENGTH NOTED)
		EMERGENCY PREEMPTION CONFIRMATION STROBE LIGHT
		VEHICULAR SIGNAL HEAD
		PEDESTRIAN SIGNAL HEAD
		MAST ARM OR TS POLE MOUNTED SIGN
		EMERGENCY PRE-EMPTION RECEIVER
		EMERGENCY PRE-EMPTION CONFIRMATION STROBE
		PEDESTRIAN PUSH BUTTON
		YAGI ANTENNA
		BICYCLE WIRE LOOP DETECTOR (SIZE AS NOTED)
		WIRE LOOP DETECTOR (SIZE AND TYPE NOTED)
		TRAFFIC SIGN (1 POST)
		TRAFFIC SIGN (2 POST)
		PULL BOX 12"x12" (OR AS NOTED)
		ELECTRIC HANDHOLE 12"x24" (OR AS NOTED)
		TRAFFIC SIGNAL CONDUIT

ABBREVIATIONS

GENERAL

AADT	ANNUAL AVERAGE DAILY TRAFFIC
ABAN	ABANDON
ADJ	ADJUST
APPROX.	APPROXIMATE
A.C.	ASPHALT CONCRETE
ACCM PIPE	ASPHALT COATED CORRUGATED METAL PIPE
BIT.	BITUMINOUS
BC	BOTTOM OF CURB
BD.	BOUND
BL	BASELINE
BLDG	BUILDING
BM	BENCHMARK
BO	BY OTHERS
BOS	BOTTOM OF SLOPE
BR.	BRIDGE
CB	CATCH BASIN
CBCI	CATCH BASIN WITH CURB INLET
CC	CEMENT CONCRETE
CCM	CEMENT CONCRETE MASONRY
CEM	CEMENT
CI	CURB INLET
CIP	CAST IRON PIPE
CIT	CHANGE IN TYPE
CLF	CHAIN LINK FENCE
CL	CENTERLINE
CMP	CORRUGATED METAL PIPE
CSP	CORRUGATED STEEL PIPE
CO.	COUNTY
CONC	CONCRETE
CONT	CONTINUOUS
CONST	CONSTRUCTION
CR GR	CROWN GRADE
DHV	DESIGN HOURLY VOLUME
DI	DROP INLET
DIA	DIAMETER
DIP	DUCTILE IRON PIPE
DW	STEADY DON'T WALK - PORTLAND ORANGE
DWY	DRIVEWAY
ELEV (or EL.)	ELEVATION
EMB	EMBANKMENT
EOP	EDGE OF PAVEMENT
EXIST (or EX)	EXISTING
EXC	EXCAVATION
F&C	FRAME AND COVER
F&G	FRAME AND GRATE
FDN.	FOUNDATION
FDP	FULL DEPTH PAVEMENT
FLDSTN	FIELDSTONE
GAR	GARAGE
GC	GRANITE CURB
GD	GROUND
GG	GAS GATE
GI	GUTTER INLET
GIP	GALVANIZED IRON PIPE
GRAN	GRANITE
GRAV	GRAVEL
GRD	GUARD
HDW	HEADWALL
HH	HAND HOLE
HMA	HOT MIX ASPHALT
HOR	HORIZONTAL
HYD	HYDRANT
INV	INVERT
JCT	JUNCTION
L	LENGTH OF CURVE
LB	LEACH BASIN
LOG	LIMIT OF GRADING
LP	LIGHT POLE
L&S	LOAM AND SEED
LT	LEFT
MAX	MAXIMUM
MB	MAILBOX
MH	MANHOLE
MHB	MASSACHUSETTS HIGHWAY BOUND
MIN	MINIMUM
NIC	NOT IN CONTRACT
NO.	NUMBER
OCS	OUTLET CONTROL STRUCTURE
PC	POINT OF CURVATURE
PCC	POINT OF COMPOUND CURVATURE
P.G.L.	PROFILE GRADE LINE
PI	POINT OF INTERSECTION
POC	POINT ON CURVE
POT	POINT ON TANGENT
PRC	POINT OF REVERSE CURVATURE
PROJ	PROJECT
PROP	PROPOSED

ABBREVIATIONS (cont.)

GENERAL

PSB	PLANTABLE SOIL BORROW
PT	POINT OF TANGENCY
PVC	POINT OF VERTICAL CURVATURE
PVI	POINT OF VERTICAL INTERSECTION
PVT	POINT OF VERTICAL TANGENCY
PVMT	PAVEMENT
PWW	PAVED WATERWAY
R	RADIUS OF CURVATURE
R&D	REMOVE AND DISPOSE
RCP	REINFORCED CONCRETE PIPE
RD	ROAD
RDWY	ROADWAY
REM	REMOVE
REMOD	REMODEL
RET	RETAIN
RET WALL	RETAINING WALL
ROW	RIGHT OF WAY
RR	RAILROAD
RRFB	RECTANGULAR RAPID FLASHING BEACON
R&R	REMOVE AND RESET
R&S	REMOVE AND STACK
RT	RIGHT
SB	STONE BOUND
SHLD	SHOULDER
SMH	SEWER MANHOLE
ST	STREET
STA	STATION
SSD	STOPPING SIGHT DISTANCE
SHLO	STATE HIGHWAY LAYOUT LINE
SW	SIDEWALK
T	TANGENT DISTANCE OF CURVE/TRUCK %
TAN	TANGENT
TEMP	TEMPORARY
TC	TOP OF CURB
TOS	TOP OF SLOPE
TYP	TYPICAL
UP	UTILITY POLE
VAR	VARIES
VERT	VERTICAL
VC	VERTICAL CURVE
WCR	WHEEL CHAIR RAMP
WG	WATER GATE
WIP	WROUGHT IRON PIPE
WM	WATER METER/WATER MAIN
X-SECT	CROSS SECTION

TRAFFIC SIGNAL ABBREVIATIONS

CAB.	CABINET
CCVE	CLOSED CIRCUIT VIDEO EQUIPMENT
DW	STEADY DON'T WALK
FDW	FLASHING DON'T WALK
FR	FLASHING CIRCULAR RED
FRL	FLASHING RED LEFT ARROW
FRR	FLASHING RED RIGHT ARROW
FY	FLASHING CIRCULAR YELLOW
FYL	FLASHING YELLOW LEFT ARROW
FYR	FLASHING YELLOW RIGHT ARROW
G	STEADY CIRCULAR GREEN
GL	STEADY GREEN LEFT ARROW
GR	STEADY GREEN RIGHT ARROW
GSL	STEADY GREEN SLASH LEFT ARROW
GSR	STEADY GREEN SLASH RIGHT ARROW
GV	STEADY GREEN VERTICAL ARROW
OL	OVERLAP
PED	PEDESTRIAN
PTZ	PAN, TILT, ZOOM
R	STEADY CIRCULAR RED
RL	STEADY RED LEFT ARROW
RR	STEADY RED RIGHT ARROW
TR SIG	TRAFFIC SIGNAL
TSC	TRAFFIC SIGNAL CONDUIT
W	STEADY WALKING PERSON
Y	STEADY CIRCULAR YELLOW
YL	STEADY YELLOW LEFT ARROW

LAWRENCE
LMRC RAIL TRAIL

STATE	FED. AID PROJ. NO.	SHEET NO.	TOTAL SHEETS
MA	-	2	225
PROJECT FILE NO.	608930		

LEGEND & ABBREVIATIONS

608930_HD2(LEGEND).DWG Plotted on 15-Aug-2023 10:44 AM

Proposal No. 608930-128034

A00860 - 41

608930_HD3(KEY PLAN).DWG Plotted on 28-Oct-2022 4:07 PM

LAWRENCE
LMRC RAIL TRAIL

STATE	FED. AID PROJ. NO.	SHEET NO.	TOTAL SHEETS
MA	-	3	225
PROJECT FILE NO. 608930			

KEY PLAN

SCALE: 1" = 150'
0 150 300 450 600

CONTINUED BELOW

WEST STREET
HAVERHILL STREET (ROUTE 110)
BRADFORD STREET
MORTON STREET
LOWELL STREET
SEE LOWELL STREET PLANS UNDER SEPARATE COVER
MELVIN STREET
WINTER STREET
COMMON STREET
ESSEX STREET
METHUEN STREET
BROADWAY
WATER STREET
CANAL STREET
MERRIMACK RIVER
MERRIMACK STREET

PROJECT BEGIN
STA 1+16
N3080281.0913
E746586.2552

~CITY OF LAWRENCE~
~CITY OF METHUEN~

PROJECT END
STA 88+45
N3085865.1576
E741310.1108

LIMIT OF WORK
STA 309+42
N3085910.0398
E741529.3536

LIMIT OF WORK
STA 401+60
N3085336.1304
E741907.3135

MANCHESTER STREET PARK
CURRENT HILL ROAD
RESERVOIR STREET
MAY STREET
MANCHESTER STREET
BLAKEIN STREET
ARCHER STREET
WENDELL STREET
BOURGOIN PARK
HUBBARD PLACE

CONTINUED ABOVE

LEGEND
- CONSTRUCTION PLANS
- TRAFFIC SIGN & PAVEMENT MARKING PLANS
- TRAFFIC SIGNAL PLANS
- CURB TIE & GRADING PLANS
- UTILITY PLANS

NAD 83 N

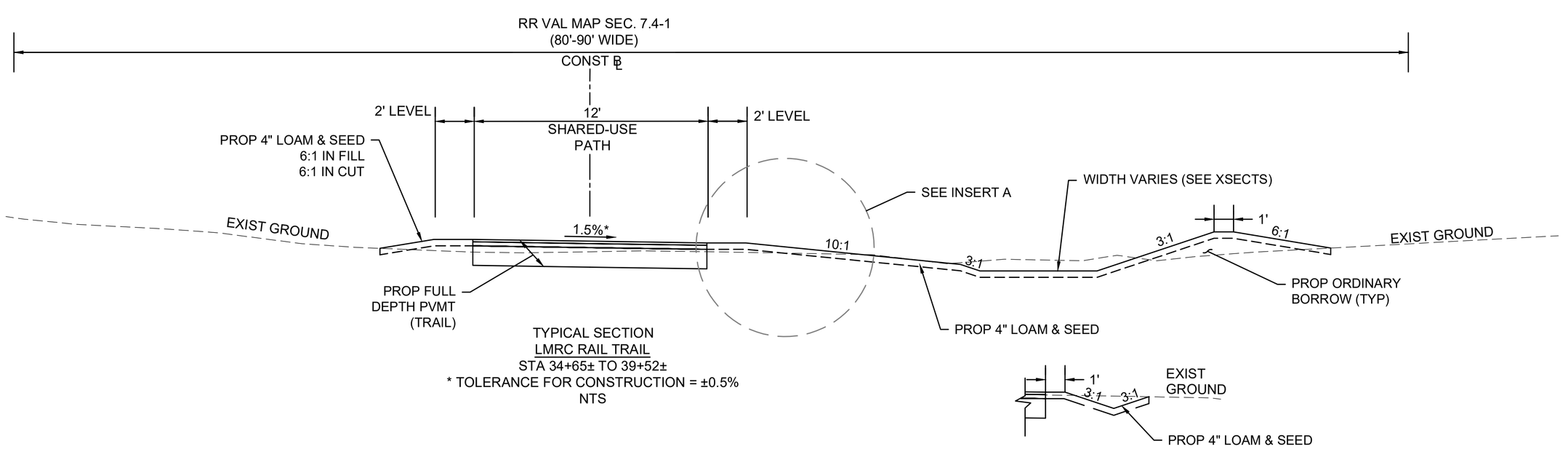

TYPICAL SECTION
LMRC RAIL TRAIL
STA 34+65± TO 39+52±
* TOLERANCE FOR CONSTRUCTION = ±0.5%
NTS

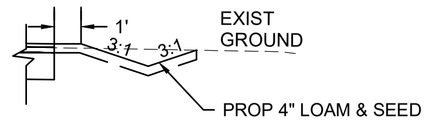

INSERT A
STA 39+00± TO STA 39+52

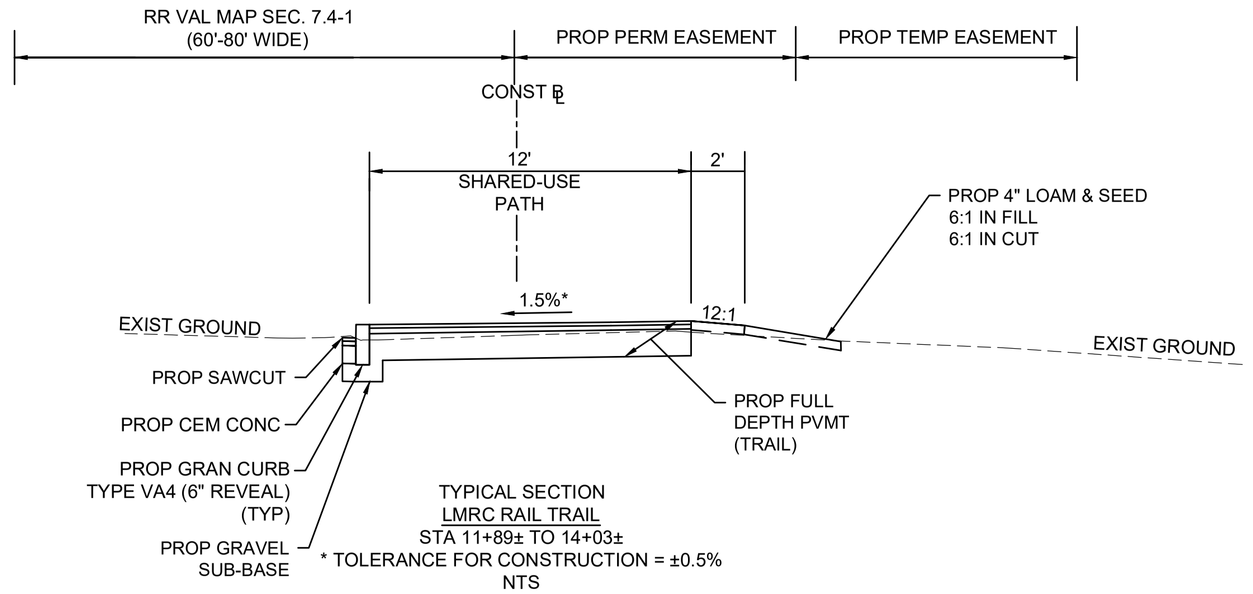

TYPICAL SECTION
LMRC RAIL TRAIL
STA 11+89± TO 14+03±
* TOLERANCE FOR CONSTRUCTION = ±0.5%
NTS

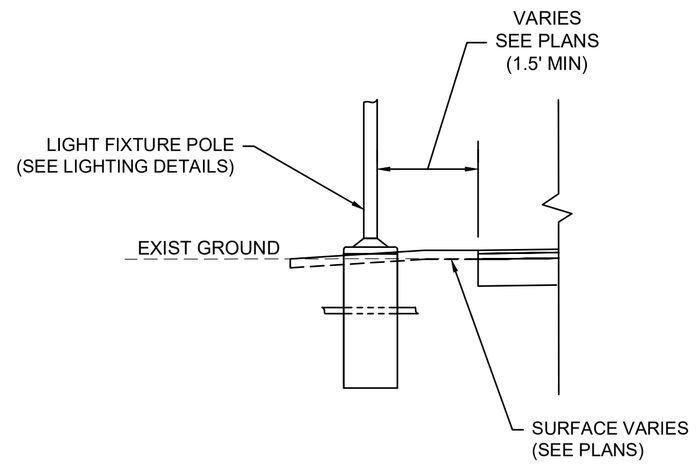

LIGHTING FIXTURE OFFSET
LMRC RAIL TRAIL

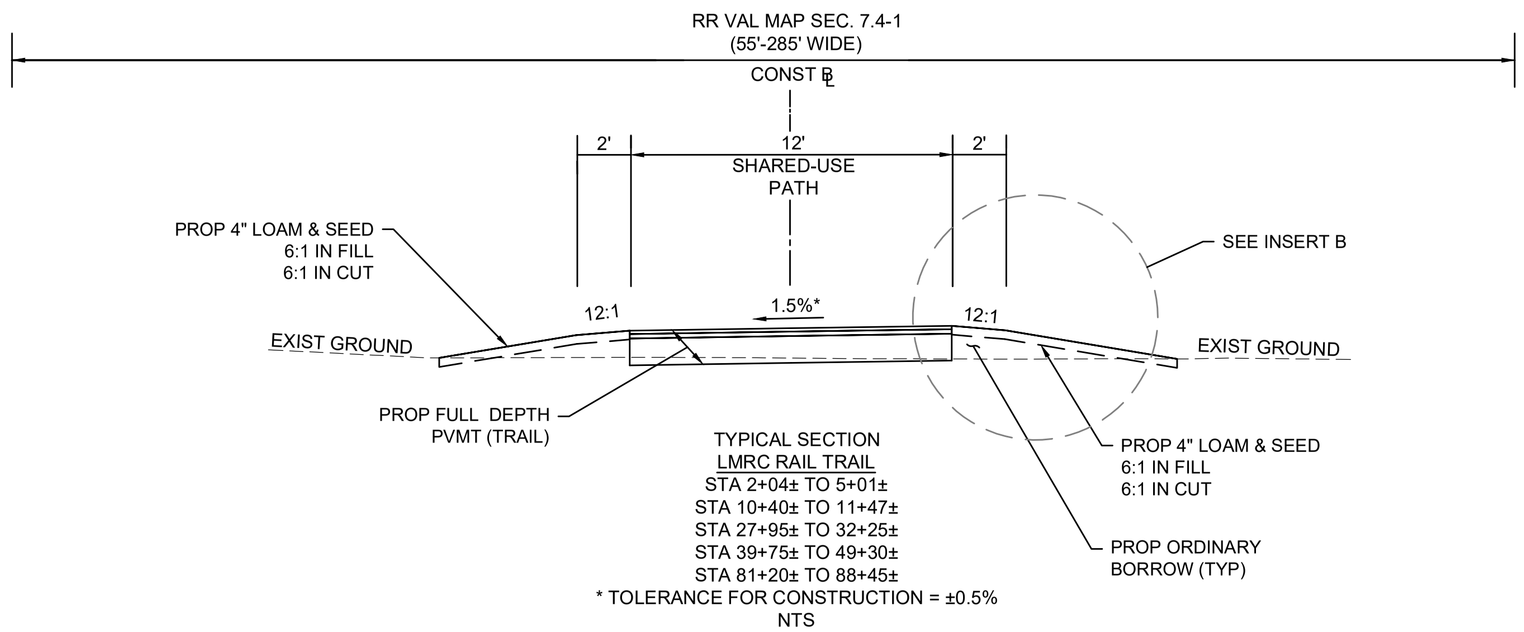

TYPICAL SECTION
LMRC RAIL TRAIL
STA 2+04± TO 5+01±
STA 10+40± TO 11+47±
STA 27+95± TO 32+25±
STA 39+75± TO 49+30±
STA 81+20± TO 88+45±
* TOLERANCE FOR CONSTRUCTION = ±0.5%
NTS

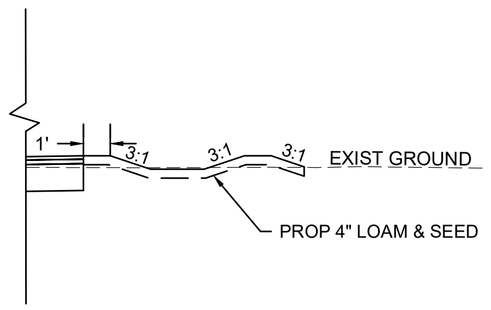

INSERT B
STA 39+75± TO STA 49+30±

LAWRENCE
LMRC RAIL TRAIL

STATE	FED. AID PROJ. NO.	SHEET NO.	TOTAL SHEETS
MA	-	4	225
PROJECT FILE NO.	608930		

TYPICAL SECTIONS AND PAVEMENT NOTES - 1 OF 2

PAVEMENT NOTES

PROPOSED HOT MIX ASPHALT (HMA) MILL & OVERLAY
SURFACE: 1½" SUPERPAVE SURFACE COURSE - 12.5 (SSC - 12.5) OVER
1½" PAVEMENT FINE MILLING

PROPOSED HOT MIX ASPHALT (HMA) MILL & OVERLAY - (SOUTH BROADWAY/ CANAL STREET/ WATER STREET)

SURFACE: 1¾" SUPERPAVE SURFACE COURSE - 9.5 - POLYMER (SSC - 9.5 - P) OVER
1½" SUPERPAVE SURFACE COURSE - 12.5 (SSC - 12.5) OVER
1½" PAVEMENT FINE MILLING

PROPOSED HOT MIX ASPHALT (HMA) DRIVEWAY & HOT MIX ASPHALT (HMA) SIDEWALK THROUGH DRIVEWAY

SURFACE: 1½" SUPERPAVE SURFACE COURSE - 9.5 (SSC - 9.5) OVER
2½" SUPERPAVE SURFACE COURSE - 12.5 (SSC - 12.5) OVER

BASE: 8" GRAVEL BORROW, TYPE b
ADD GRAVEL BORROW. TYPE b AS REQUIRED

PROPOSED HOT MIX ASPHALT (HMA) SIDEWALK

SURFACE: 1¼" SUPERPAVE SURFACE COURSE - 9.5 (SSC - 9.5) OVER
1¾" SUPERPAVE SURFACE COURSE - 12.5 (SSC - 12.5) OVER

BASE: 8" GRAVEL BORROW, TYPE b

PROPOSED FULL DEPTH PAVEMENT (ROADWAY)

SURFACE: 1½" SUPERPAVE SURFACE COURSE - 12.5 (SSC - 12.5) OVER
2¼" SUPERPAVE INTERMEDIATE COURSE - 19.0 (SIC - 19.0) OVER

BASE: 4½" SUPERPAVE BASE COURSE - 37.5 (SBC - 37.5) OVER

SUBBASE: 12" GRAVEL BORROW, TYPE b

PROPOSED FULL DEPTH PAVEMENT (TRAIL)

SURFACE: 1½" SUPERPAVE SURFACE COURSE - 9.5 (SSC - 9.5) OVER
2½" SUPERPAVE INTERMEDIATE COURSE - 12.5 (SIC - 12.5) OVER

BASE: 12" (MIN) GRAVEL BORROW, TYPE b

PROPOSED PERMANENT PAVEMENT TRENCH PATCH

SURFACE: 1½" SUPERPAVE SURFACE COURSE - 12.5 (SSC - 12.5) OVER
2¼" SUPERPAVE INTERMEDIATE COURSE - 19.0 (SIC - 19.0) OVER
(VARIABLE DEPTH (SEE NOTE 5) SUPERPAVE INTERMEDIATE COURSE - 19.0 (SIC - 19.0)
COMPACTED IN 2¼" (MIN) AND 3" (MAX) LIFTS OVER

BASE: 8" GRAVEL BORROW, TYPE b OVER

SUBBASE: EXISTING MATERIAL SUITABLE FOR RE-USE SUPPLEMENTED WITH GRAVEL BORROW AS NECESSARY TO MATCH GRADE (SEE VARIOUS TRENCH DETAILS)

PROPOSED CEMENT CONCRETE SIDEWALK / CURB RAMP / MEDIAN

SURFACE: 4" CEMENT CONCRETE (4000 PSI, ¾", 610) AIR ENTRAINED

BASE: 8" GRAVEL BORROW, TYPE b

PROPOSED CEMENT CONCRETE SIDEWALK THROUGH DRIVEWAY

SURFACE: 6" CEMENT CONCRETE (4000 PSI, ¾", 610) AIR ENTRAINED

BASE: 8" GRAVEL BORROW, TYPE b

GRAVEL WALK

SURFACE: 4" PROCESSED GRAVEL OVER

BASE: 8" GRAVEL BORROW,TYPE b

608930_HDA(TYPICAL SECTIONS).DWG Plotted on 16-Aug-2023 9:36 AM

Proposal No. 608930-128034

608930_HD4(TYPICAL SECTIONS).DWG Plotted on 28-Oct-2022 4:08 PM

LAWRENCE
LMRC RAIL TRAIL

STATE	FED. AID PROJ. NO.	SHEET NO.	TOTAL SHEETS
MA	-	5	225
PROJECT FILE NO. 608930			

TYPICAL SECTIONS AND PAVEMENT NOTES - 2 OF 2

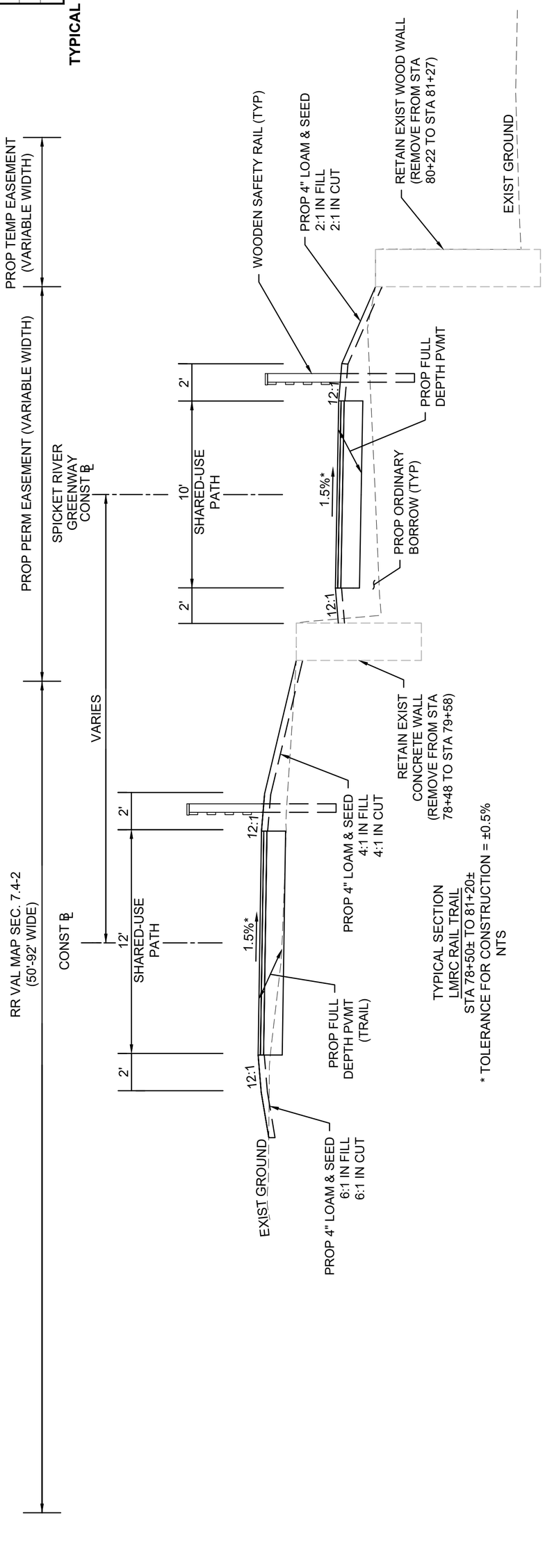

LAWRENCE
LMRC RAIL TRAIL

STATE	FED. AID PROJ. NO.	SHEET NO.	TOTAL SHEETS
MA	-	6	225
PROJECT FILE NO.	608930		

CONSTRUCTION PLANS - 1 OF 15

HIGHWAY GUARD DETAILS
NONE

TRAFFIC SIGNAL CONDUIT
NONE

WATER SUPPLY ALTERATIONS
NONE

DRAINAGE DETAILS
NONE

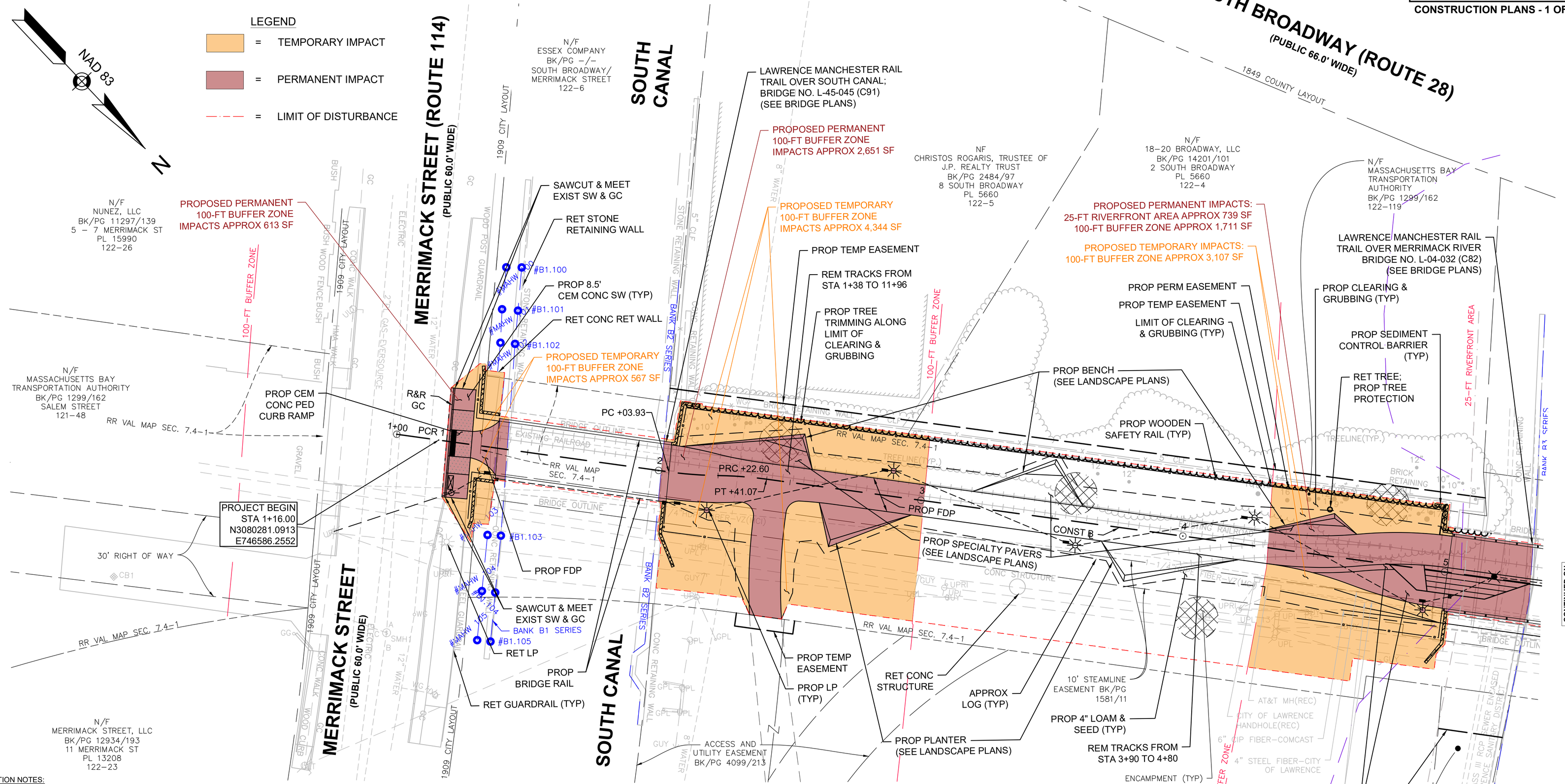

CONSTRUCTION NOTES:

1. EXISTING CONDITIONS INFORMATION COMPILED FROM AN ON-THE-GROUND INSTRUMENT SURVEY PERFORMED BY GREENMAN-PEDERSON, INC. IN JANUARY & FEBRUARY, 2017 AND SUPPLEMENTED IN JANUARY, 2022.

   HORIZONTAL DATUM = NAD83 (MASSACHUSETTS STATE PLANE COORDINATES)
   VERTICAL DATUM = NAVD88

2. ALL EXISTING STATE, COUNTY, AND TOWN LOCATION LINES HAVE BEEN ESTABLISHED FROM AN ACTUAL ON-THE-GROUND SURVEY. ALL PRIVATE PROPERTY LINES HAVE BEEN ESTABLISHED FROM AVAILABLE INFORMATION AND THEIR EXACT LOCATION ARE NOT GUARANTEED.

3. THE LOCATIONS OF EXISTING UNDERGROUND UTILITIES ARE SHOWN IN AN APPROXIMATE WAY ONLY AND HAVE NOT BEEN INDEPENDENTLY VERIFIED BY THE OWNER OR ITS REPRESENTATIVE. THE CONTRACTOR SHALL CONTACT DIGSAFE (1-888-DIGSAFE) A MINIMUM OF 72 HOURS PRIOR TO ANY CONSTRUCTION TO VERIFY THE LOCATION OF ALL EXISTING UTILITIES BEFORE COMMENCING WORK, AND SHALL BE FULLY RESPONSIBLE FOR ANY AND ALL DAMAGES WHICH MIGHT BE OCCASIONED BY THE CONTRACTOR'S FAILURE TO LOCATE AND PRESERVE ANY AND ALL UNDERGROUND UTILITIES.

4. WHERE AN EXISTING UTILITY IS FOUND TO CONFLICT WITH THE PROPOSED WORK, THE LOCATION, ELEVATION AND SIZE OF THE UTILITY SHALL BE ACCURATELY DETERMINED WITHOUT DELAY BY THE CONTRACTOR, AND THE INFORMATION FURNISHED TO THE ENGINEER FOR RESOLUTION OF THE CONFLICT.

5. ALL MUNICIPALLY OWNED UTILITY STRUCTURES (CATCH BASINS, DRAIN MANHOLES, ELECTRIC MANHOLES, ELECTRIV HANDHOLES, PULL BOXES, WATER GATES, ETC.) SHALL BE ADJUSTED BY THE CONTRACTOR TO FINISHED GRADE UNLESS DIRECTED OTHERWISE. THE CONTRACTOR SHALL COORDINATE WITH THE LAWRENCE DEPARTMENT OF PUBLIC WORKS (LDPW) TO ALLOW FOR THE REPLACEMENT OF EXISTING UTILITY STRUCTURES IN POOR CONDITION. THESE REPLACEMENT UTILITY STRUCTURES TO BE PROVIDED AND INSTALLED BY THE DPW.

6. ALL PRIVATELY OWNED UTILITY STRUCTURES (GAS GATES, ELECTRIC /TELEPHONE MANHOLES, ETC.) SHALL BE ADJUSTED TO FINISHED GRADE BY THE PRIVATE UTILITY COMPANY, UNLESS DIRECTED OTHERWISE. THE CONTRACTOR SHALL COORDINATE WITH PRIVATE UTILITY COMPANIES FOR THE ALTERATION AND ADJUSTMENT, AS NECESSARY.

7. PROPOSED LATERAL DRAIN PIPES SHALL BE INSTALLED WITH A PITCH OF 1.0% (MINIMUM) UNLESS OTHERWISE NOTED OR DIRECTED.

8. AREAS OUTSIDE THE LIMITS OF PROPOSED WORK DISTURBED BY THE CONTRACTOR'S OPERATIONS SHALL BE RESTORED BY THE CONTRACTOR TO THEIR ORIGINAL CONDITION AT THE CONTRACTORS EXPENSE.

9. ALL DISTURBED AREAS OUTSIDE THE CURBLINE SHALL BE STABILIZED WITH 4" LOAM AND SEED, UNLESS OTHERWISE NOTED.

10. THE TERM "PROPOSED" (PROP) MEANS WORK TO BE CONSTRUCTED USING NEW MATERIALS OR, WHERE APPLICABLE, RE-USING EXISTING MATERIALS IDENTIFIED AS "REMOVE AND RESET" (R&R), AS APPROVED BY THE ENGINEER.

11. THE TERM "MEET EXIST" MEANS TO MEET BOTH THE EXISTING ALIGNMENT AND ELEVATION.

12. ALL EXISTING TREES WITHIN THE PROJECT LIMITS SHALL BE RETAINED AND PROTECTED WITH TREE PROTECTION UNLESS INDICATED OTHERWISE ON THE DRAWINGS. ALL PROVIDED DIMENSIONS REFER TO THE DIAMETER AT BREAST HEIGHT.

13. AN UNOBSTRUCTED PATH OF TRAVEL WITH A MINIMUM WIDTH OF 3'-0" (EXCLUDING THE WIDTH OF CURB) SHALL BE MAINTAINED PAST ALL OBSTRUCTIONS (UTILITY POLES, LIGHT POLES, SIGNS, MAILBOXES, ALONG DRIVEWAY OPENINGS, ETC.)

14. ALL RAILROAD TRACKS AND TIMBER SHALL BE REMOVED WITHIN PROJECT LIMITS.

15. DETECTABLE WARNING PANELS ARE REQUIRED ON ALL PROPOSED PEDESTRIAN CURB RAMPS AND SHALL BE INSTALLED IN ACCORDANCE WITH MASSDOT CONSTRUCTION STANDARDS.

16. LMRC RAIL TRAIL A AND LMRC TRAIL B CONSTRUCTION BASELINES DO NOT HAVE CONTINUOUS STATIONING.

17. EXISTING OR PROPOSED STRUCTURES TO BE ADJUSTED WITHIN PEDESTRIAN CURB RAMPS SHALL BE CAREFULLY ADJUSTED SUCH THAT THE TOPMOST SURFACE OR STRUCTURE COVER SHALL BE FLUSH WITH THE FINAL PEDESTRIAN CURB RAMP SURFACE.

18. EXISTING FENCES WITHIN PROJECT LIMITS SHALL BE REMOVED AND STACKED UNLESS INDICATED OTHERWISE ON THE DRAWINGS. FENCES NOT REQUIRED TO BE SET OR STACKED WILL BECOME THE PROPERTY OF CONTRACT AND REMOVED AND PROPERTY DISCARDED BY CONTRACT.

19. IN AREAS OF PROPOSED 12" EXCAVATION OR EXISTING ROADWAY / SIDEWALK WHERE LOAM AND SEED IS PROPOSED, THE CONTRACTOR SHALL REMOVE EXISTING ROADWAY / SIDEWALK AND SUBBASE, AND REPLACE WITH SUITABLE EXCAVATED MATERIAL OR ORDINARY BORROW AND PROPOSED 4" LOAM AND SEED TO MEET FINAL GRADE.

LEGEND

PCR # = PEDESTRIAN CURB RAMP NUMBER

DWY # = DRIVEWAY NUMBER

608930_HDS(CONSTRUCTION PLANS - NOI).DWG Plotted on 15-May-2023 10:21 AM

Proposal No. 608930-128034

608930_HD5(CONSTRUCTION PLANS - NOI).DWG Plotted on 15-May-2023 10:21 AM

LAWRENCE
LMRC RAIL TRAIL

STATE	FED. AID PROJ. NO.	SHEET NO.	TOTAL SHEETS
MA	-	7	225
PROJECT FILE NO. 608930			

CONSTRUCTION PLANS - 2 OF 15

LEGEND
= TEMPORARY IMPACT
= PERMANENT IMPACT
= LIMIT OF DISTURBANCE

WATER SUPPLY ALTERATIONS
NONE

DRAINAGE DETAILS
NONE

TRAFFIC SIGNAL CONDUIT
NONE

HIGHWAY GUARD DETAILS
NONE

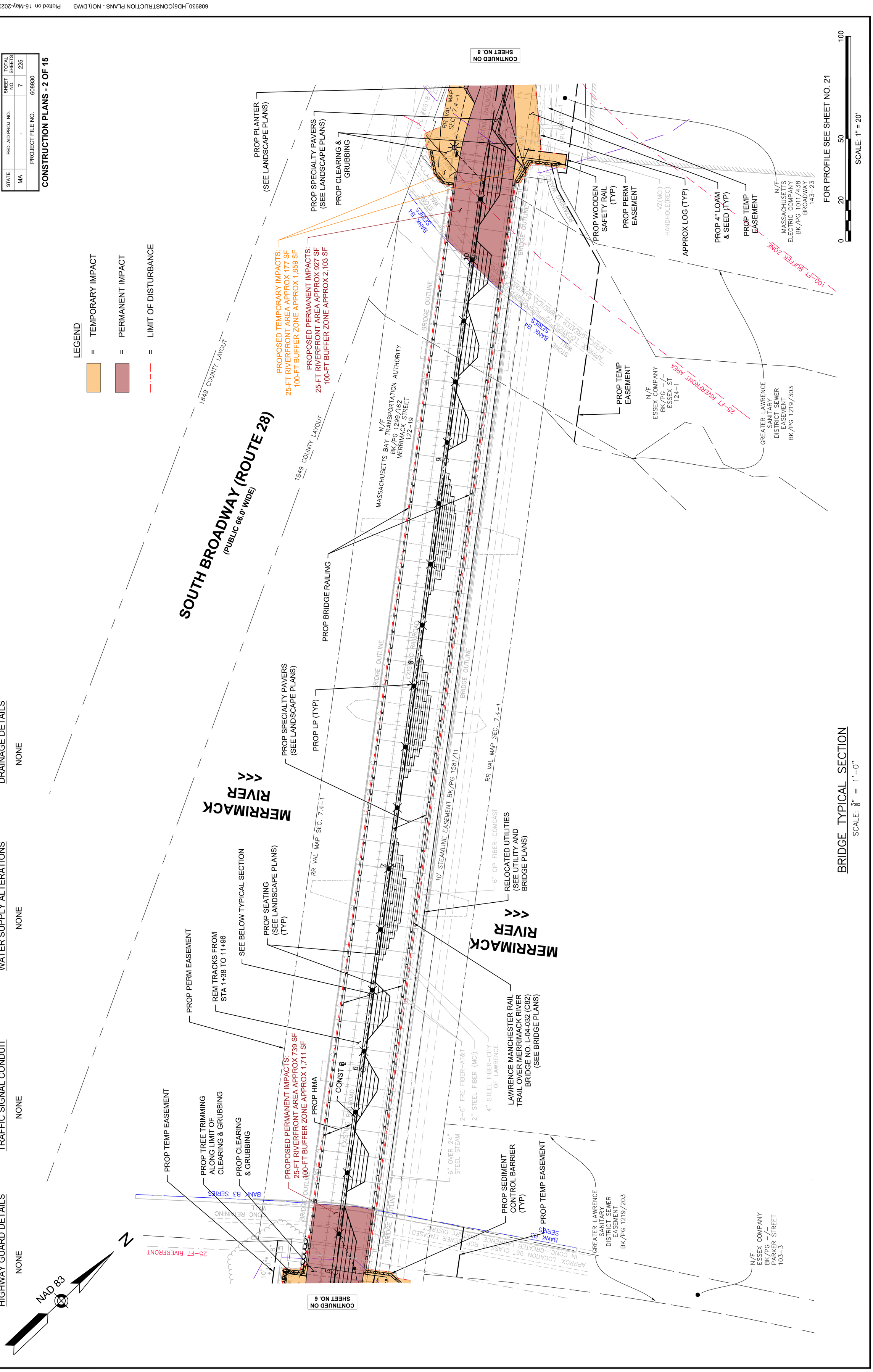

BRIDGE TYPICAL SECTION
SCALE: 3/8" = 1'-0"

608930_HD5(CONSTRUCTION PLANS - NOI).DWG Plotted on 15-May-2023 10:22 AM

LAWRENCE
LMRC RAIL TRAIL

STATE	FED. AID PROJ. NO.	SHEET NO.	TOTAL SHEETS
MA	-	8	225
PROJECT FILE NO.	608930		

CONSTRUCTION PLANS - 3 OF 15

LEGEND

PCR # = PEDESTRIAN CURB RAMP NUMBER

DWY # = DRIVEWAY NUMBER

= TEMPORARY IMPACT

= PERMANENT IMPACT

= LIMIT OF DISTURBANCE

TRAFFIC SIGNAL CONDUIT — SEE SHEET 49

DRAINAGE DETAILS — SEE SHEET 59

WATER SUPPLY ALTERATIONS — NONE

HIGHWAY GUARD DETAILS — NONE

NAD 83

SCALE: 1" = 20'

FOR PROFILE SEE SHEET NO. 21

CONTINUED ON SHEET NO. 9

CONTINUED ON SHEET NO. 7

BROADWAY - ROUTE 28 (PUBLIC)

WATER STREET (PUBLIC - 50' WIDE)

CANAL STREET (PUBLIC - 50' WIDE)

NORTH CANAL

PROPOSED TEMPORARY IMPACTS: 100-FT BUFFER ZONE APPROX 1,716 SF

PROPOSED PERMANENT IMPACTS: 100-FT BUFFER ZONE APPROX 11,814 SF

PROPOSED TEMPORARY IMPACTS: 100-FT BUFFER ZONE APPROX 550 SF

PROPOSED PERMANENT IMPACTS: 25-FT RIVERFRONT AREA APPROX 927 SF 100-FT BUFFER ZONE APPROX 2,103 SF

PROPOSED TEMPORARY IMPACTS: 25-FT RIVERFRONT AREA APPROX 177 SF 100-FT BUFFER ZONE APPROX 1,859 SF

PROPOSED PERMANENT IMPACTS: 100-FT BUFFER ZONE APPROX 2,057 SF

APPROX BFE/ BORDERING LAND SUBJECT TO FLOODING

100-FT BUFFER ZONE

LIMIT OF WORK

BANK B6 SERIES

BANK B5 SERIES

STONE RETAINING WALL

RETAINING WALL

CONC WALK

CONC SIDEWALK

BRIDGE RAILING

1874 CITY LAYOUT

1898 COUNTY LAYOUT

1935 COUNTY LAYOUT

1849 COUNTY LAYOUT

RR VAL MAP SEC. 7.4-1

4" STEEL FIBER-CITY OF LAWRENCE

2-6" FRE FIBER-AT&T

6" CIP FIBER-COMCAST

VZ(MCI) HANDHOLE (REC)

N/F SLEIMAN A. RAMY BK/PG 7532/159 1 WATER STREET PL 4296 144-3

N/F HODEN FAMILY REALTY, LLC BK/PG 16201/145 3-5 WATER ST 144-2

N/F BROADWAYCANAL-1 LLC BK/PG 16328/128 3 BROADWAY 144-24

N/F 6-12 HAMPSHIRE STREET, LLC BK/PG 13424/72 606 CANAL STREET 144-27-2

N/F ESSEX COMPANY BK/PG -/- WATER ST 144-27-1

N/F ESSEX COMPANY BK/PG -/- ESSEX ST 143-21

N/F MASSACHUSETTS BAY TRANSPORTATION AUTHORITY BK/PG 1299/162 BROADWAY 144-29

N/F MASSACHUSETTS ELECTRIC COMPANY BK/PG 1011/438 BROADWAY 143-23

N/F MERRIMACK FALLS LLC BK/PG 12492/11 BROADWAY PL 7841, PL 8527 143-22

N/F NUNEZ LLC BK/PG 16673/321 468 CANAL STREET 144-28

N/F ESSEX COMPANY BK/PG -/- ESSEX ST 124-1

10' STEAMLINE EASEMENT BK/PG 1581/11

4'0" PASSAGEWAY FOR ABUTTERS PLAN 8527

REM CLF FROM STA 25+50 TO 30+39

PROP SEATING (SEE LANDSCAPE PLANS)

PROP TS CAB

PROP SPECIALTY PAVERS (SEE LANDSCAPE PLANS)

REM TRACKS FROM STA 25+53 TO 32+35

PROP WEATHERING STEEL SCREEN FENCE (SEE LANDSCAPE PLANS)

PROP TEMP EASEMENT

PROP PERM EASEMENT

PROP 4" LOAM & SEED

REM CONC

26PCC +03.32

PCC +61.17

PROP TEMP EASEMENT

PROP SAWCUT (TYP)

PROP PERMANENT TRENCH PATCH

24+51.00 LAWRENCE RAIL TRAIL B= 15+11.53 LAWRENCE RAIL TRAIL A BL

CONST ℄

LIMIT OF HMA MILL & OVERLAY

MEET EXIST GC & SW

BEGIN CITY LAYOUT ALTERATION

15+45.76 LAWRENCE RAIL TRAIL A= 110+78.52 CANAL STREET WATER STREET BL

RET CLF & GATE

RET GUARDRAIL

END CITY LAYOUT ALTERATION

RET GRATE

PROP CEM CONC SW TO MEET EXIST

PROP TEMP EASEMENT

PROP PERM EASEMENT

PROP HMA MILL & OVERLAY

PI +48.72

PROP 8.5' CEM CONC SW

ADJ EHH

PROP TEMP EASEMENT

PROP 8' CEM CONC SW

RET WOOD FENCE

REM TRACKS FROM STA 15+02 TO 15+11

PROP TS POST (TYP)

10' STEAMLINE EASEMENT BK/PG 1581/11

RET

MEET EXIST GC & SW

PROP SAWCUT (TYP)

PROP PERMANENT TRENCH PATCH

24+51.00 LAWRENCE RAIL TRAIL B= 15+11.53 LAWRENCE RAIL TRAIL A BL

LIMIT OF HMA MILL & OVERLAY

BEGIN CITY LAYOUT ALTERATION

MEET EXIST GC & SW

PROP TEMP EASEMENT

15+45.76 LAWRENCE RAIL TRAIL A= 110+78.52 CANAL STREET WATER STREET BL

RET CLF & GATE

PROP TEMP EASEMENT

END CITY LAYOUT ALTERATION

RET GRATE

MEET EXIST GC & SW

PI +48.72

REM EXIST HMA; PROP 4" LOAM & SEED

PROP PERM EASEMENT

PROP TEMP EASEMENT

RET TRACKS

MEET EXIST GC & SW

REM LP FND

PROP HMA SW-THRU DWY

DWY 1

PT +66.47

PROP GC; TYPE VB

PROP HMA DWY

MEET EXIST DWY (SAWCUT)

PROP TEMP EASEMENT

PROP CEM CONC SW TO MEET EXIST

PROP TEMP EASEMENT

RET GUARDRAIL

PROP PERM EASEMENT

PROP 4" LOAM & SEED (TYP)

MEET EXIST DWY (SAWCUT)

PROP CEM CONC MEDIAN

R&S LP

PROP PERM EASEMENT

PRC +99.22

PROP TEMP EASEMENT

APPROX LOG (TYP)

PROP SEDIMENT CONTROL BARRIER (TYP)

PROP TEMP EASEMENT

PROP WOODEN SAFETY RAIL (TYP)

PROP PERM EASEMENT

PROP SPECIALTY PAVERS (SEE LANDSCAPE PLANS)

PROP CLEARING & GRUBBING

PROP SEATING (SEE LANDSCAPE PLANS)

PROP PERM EASEMENT

PROP TEMP EASEMENT

PROP 4" LOAM & SEED

PROP PLANTER (SEE LANDSCAPE PLANS)

PROP FDP

RET CEM CONC

PROP TEMP EASEMENT

PROP PERM EASEMENT

PROP TEMP EASEMENT

PROP TS CONDUIT (TYP)

R&S EHH

R&D TS CAB

PROP FDP

ADJ PB

LIMIT FDP

PCR 1

PCR 2

PCR 3

PCR 4

PCR 5

PCR 6

R&S EHH

PROP GC TYPE VB (TYP)

PROP TEMP EASEMENT

RET WOOD FENCE

PROP 8' CEM CONC SW

REM TRACKS FROM STA 1+38 TO 11+96

SAWCUT & MEET EXIST SW

RET GC

PC +77.47

PCC +21.75

APPROX LOG (TYP)

REM SIGNAL FOUNDATION

PROP GC; TYPE VB

PROP PERM EASEMENT

PROP TEMP EASEMENT

PROP WOODEN SAFETY RAIL (TYP)

PROP PERM EASEMENT

PROP SEDIMENT CONTROL BARRIER (TYP)

PROP TEMP EASEMENT

RET CEM CONC

PROP TEMP EASEMENT

100-FT BUFFER ZONE

PROP TEMP EASEMENT

PROP WOODEN SAFETY RAIL (TYP)

PROP PERM EASEMENT

PROP SEDIMENT CONTROL BARRIER (TYP)

PROP TEMP EASEMENT

PROP SPECIALTY PAVERS (SEE LANDSCAPE PLANS)

PROP CLEARING & GRUBBING

PROP SEATING (SEE LANDSCAPE PLANS)

PROP 4" LOAM & SEED

PROP PLANTER (SEE LANDSCAPE PLANS)

PROP FDP

RET CEM CONC

PROP TEMP EASEMENT

608930_HDS(CONSTRUCTION PLANS - NOI).DWG Plotted on 15-May-2023 10:22 AM

LAWRENCE
LMRC RAIL TRAIL

STATE	FED. AID PROJ. NO.	SHEET NO.	TOTAL SHEETS
MA	-	9	225
PROJECT FILE NO. 608930			

CONSTRUCTION PLANS - 4 OF 15

LEGEND

= LIMIT OF DISTURBANCE

DRAINAGE DETAILS

SEE SHEET 60

TRAFFIC SIGNAL CONDUIT

NONE

WATER SUPPLY ALTERATIONS

NONE

HIGHWAY GUARD DETAILS

STA 27+62 LT TIMBER GUARDRAIL TERMINAL SECTION
STA 27+63 LT TO STA 32+61 LT WOOD RAIL FENCE W/ GUARDRAIL

NAD 83

N

0 20 50 100

SCALE: 1" = 20'

FOR PROFILE SEE SHEET NO. 21

CONTINUED ON SHEET NO. 10

CONTINUED ON SHEET NO. 8

BROADWAY - ROUTE 28
(PUBLIC)

LAWRENCE
LMRC RAIL TRAIL

STATE	FED. AID PROJ. NO.	SHEET NO.	TOTAL SHEETS
MA	-	10	225
PROJECT FILE NO.	608930		

CONSTRUCTION PLANS - 5 OF 15

608930_HDS(CONSTRUCTION PLANS - NO)).DWG Plotted on 15-May-2023 10:22 AM

HIGHWAY GUARD DETAILS

STA 27+63 LT TO STA 32+61 LT WOOD RAIL FENCE W/ GUARDRAIL
32+61 LT TIMBER GUARDRAIL TERMINAL SECTION

TRAFFIC SIGNAL CONDUIT

NONE

WATER SUPPLY ALTERATIONS

NONE

DRAINAGE DETAILS

SEE SHEET 61

LEGEND

PCR # = PEDESTRIAN CURB RAMP NUMBER

DWY # = DRIVEWAY NUMBER

—·—·— = LIMIT OF DISTURBANCE

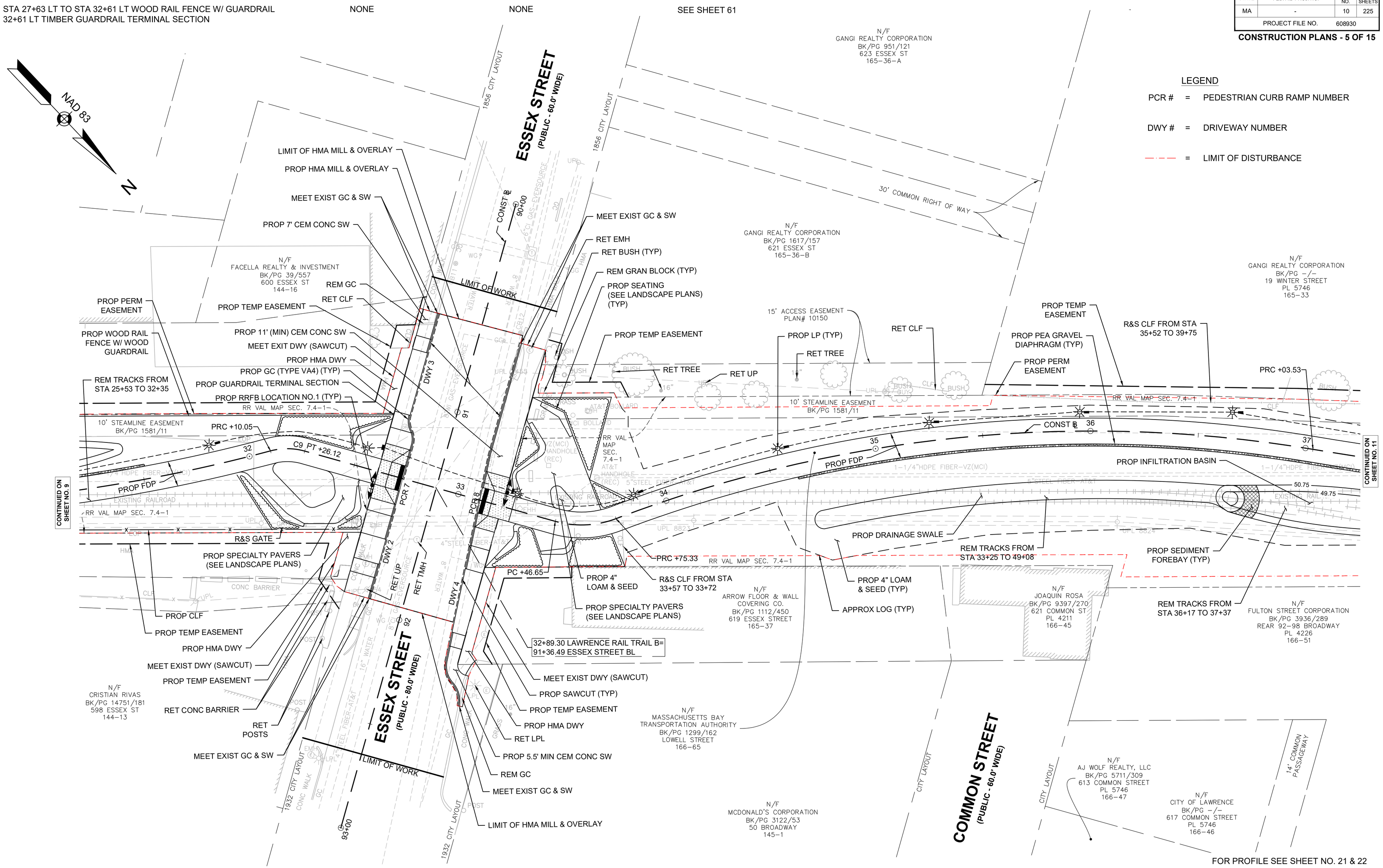

608930_HD5(CONSTRUCTION PLANS - NOI).DWG Plotted on 15-May-2023 10:22 AM

LAWRENCE
LMRC RAIL TRAIL

STATE	FED. AID PROJ. NO.	SHEET NO.	TOTAL SHEETS
MA	-	11	225
PROJECT FILE NO. 608930			

CONSTRUCTION PLANS - 6 OF 15

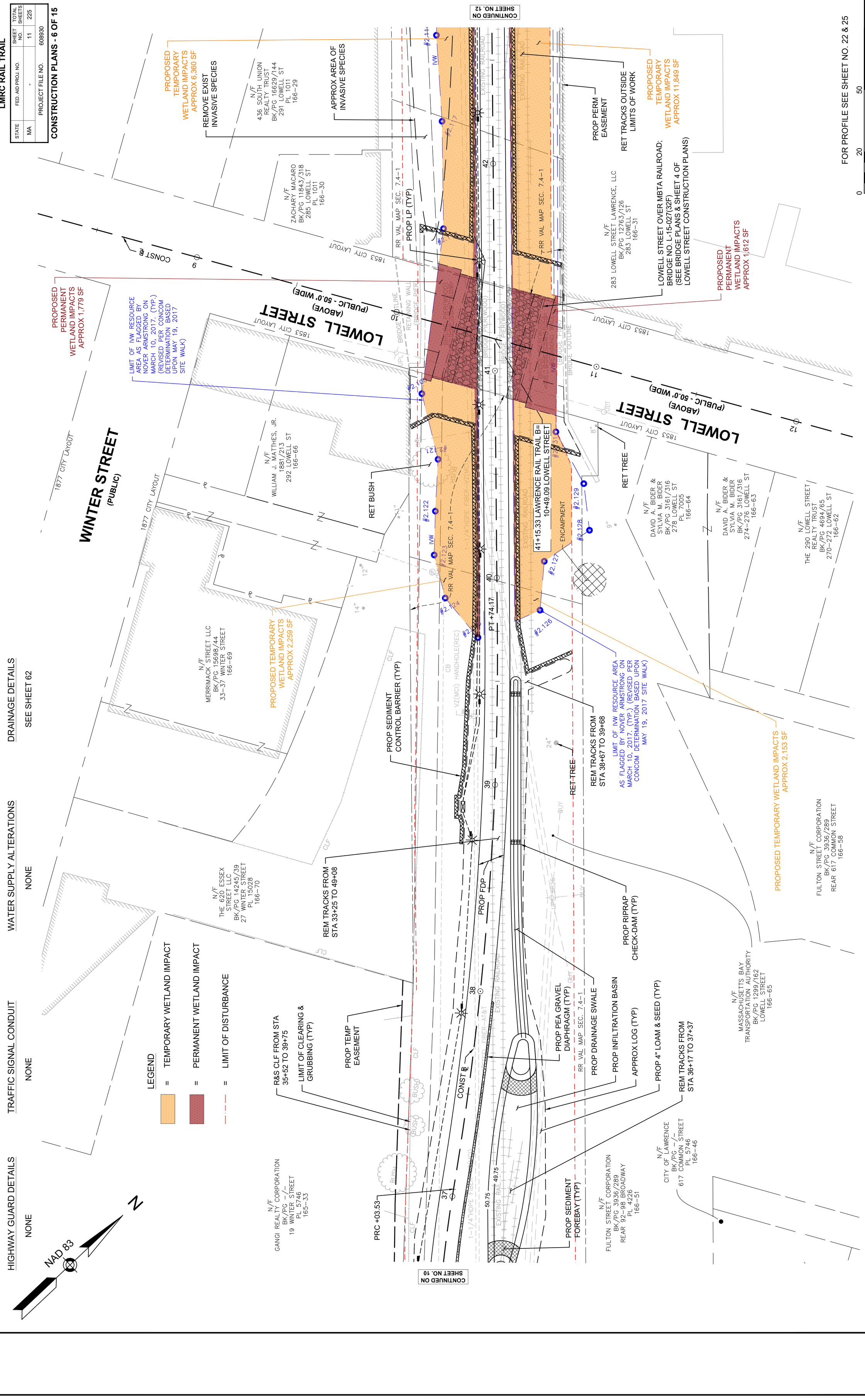

608930_HD5(CONSTRUCTION PLANS - NOI).DWG Plotted on 15-May-2023 10:23 AM

LAWRENCE
LMRC RAIL TRAIL

STATE	FED. AID PROJ. NO.	SHEET NO.	TOTAL SHEETS
MA	-	12	225
PROJECT FILE NO. 608930			

CONSTRUCTION PLANS - 7 OF 15

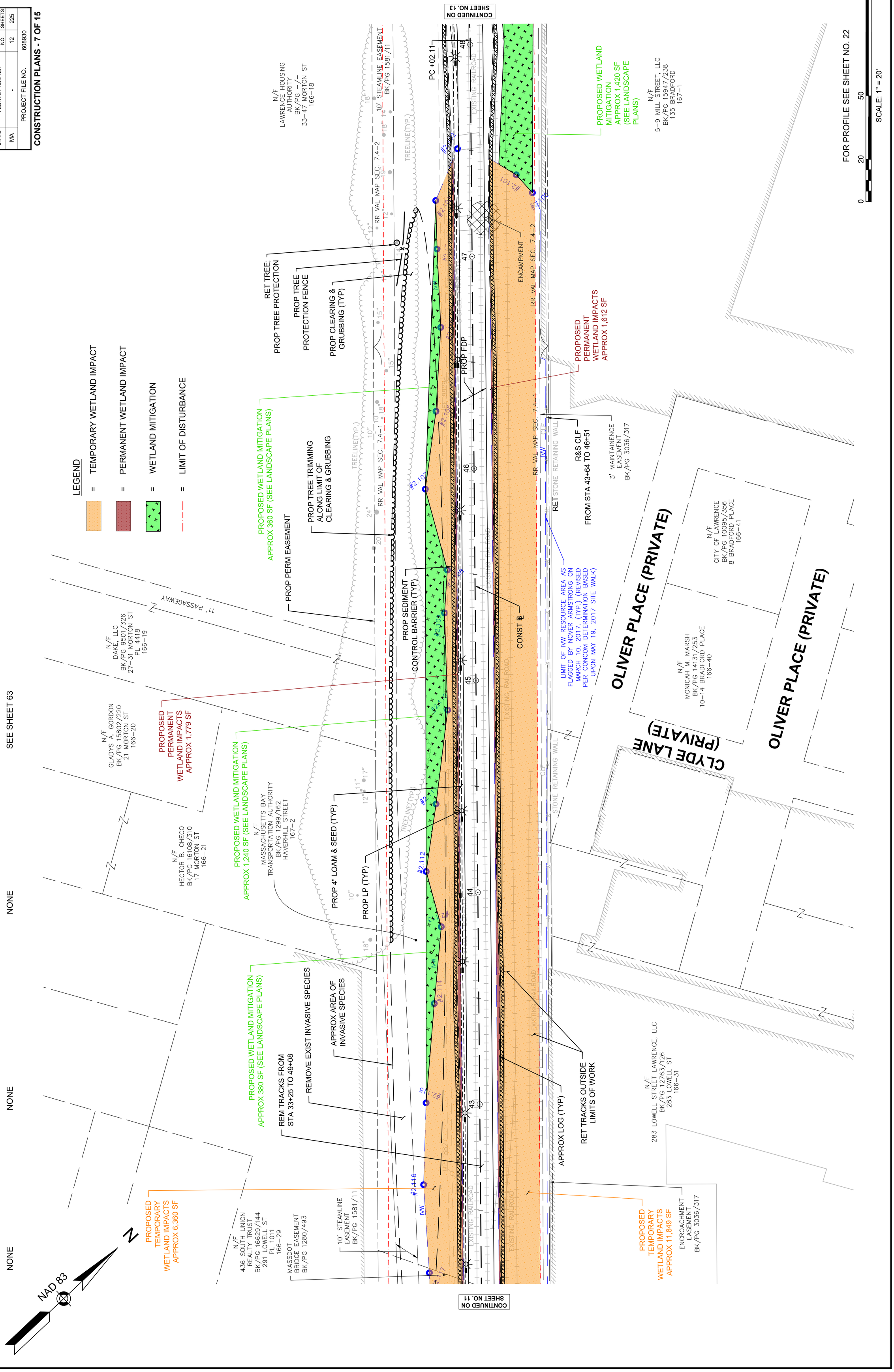

608930_HDS(CONSTRUCTION PLANS - NOI).DWG Plotted on 15-May-2023 10:23 AM

LAWRENCE
LMRC RAIL TRAIL

STATE	FED. AID PROJ. NO.	SHEET NO.	TOTAL SHEETS
MA	-	13	225
PROJECT FILE NO.	608930		

CONSTRUCTION PLANS - 8 OF 15

LEGEND

PCR # = PEDESTRIAN CURB RAMP NUMBER

DWY # = DRIVEWAY NUMBER

= WETLAND MITIGATION

= LIMIT OF DISTURBANCE

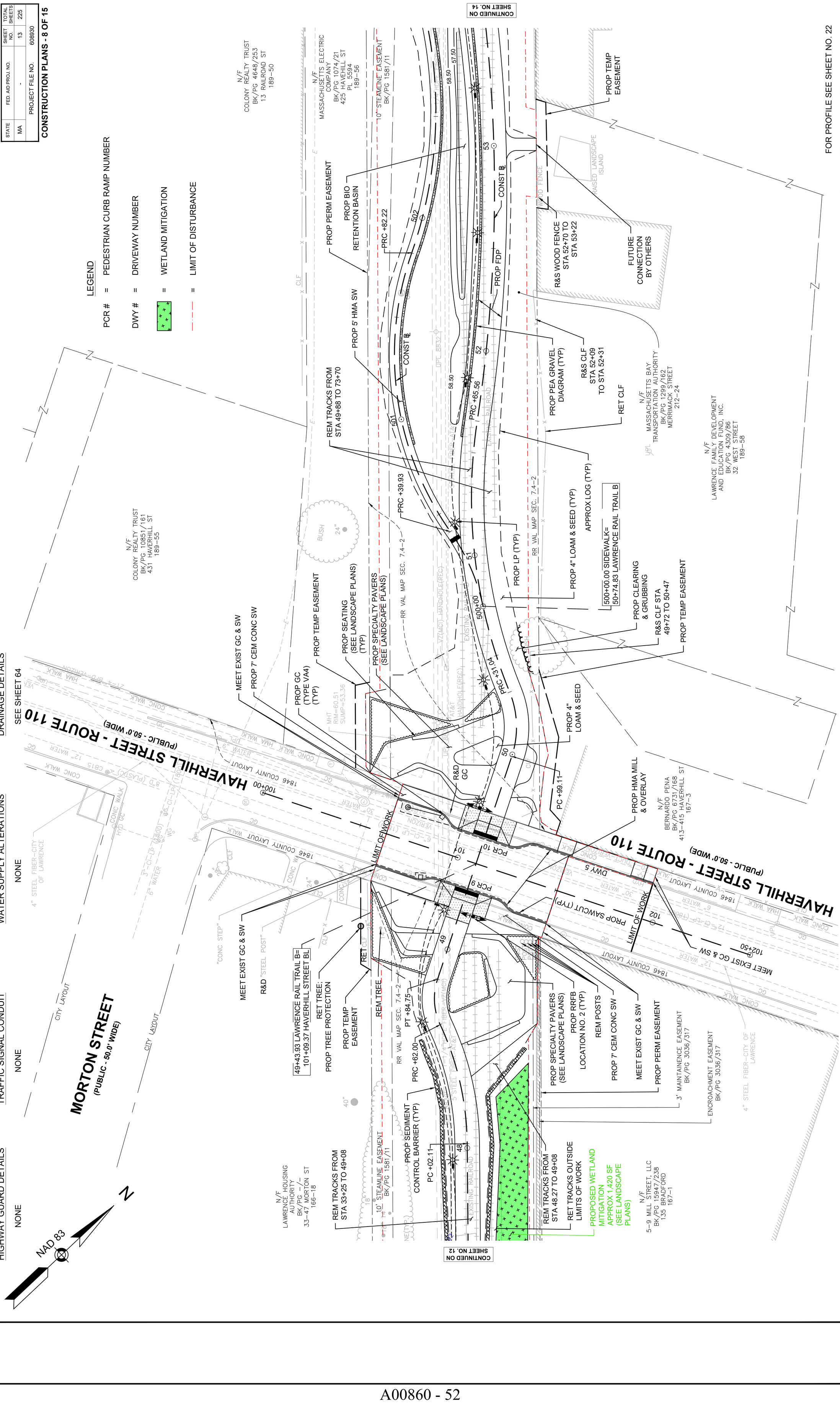

608930_HDS(CONSTRUCTION PLANS - NOI).DWG Plotted on 15-May-2023 10:23 AM

LAWRENCE
LMRC RAIL TRAIL

STATE	FED. AID PROJ. NO.	SHEET NO.	TOTAL SHEETS
MA	-	14	225
PROJECT FILE NO.	608930		

CONSTRUCTION PLANS - 9 OF 15

RAILROAD STREET
(PUBLIC)

N/F
JACQUES OUELLET
& LOUISE OUELLET
BK/PG 1341/440
55 RAILROAD ST
189-46

N/F
JOSE M. BATISTA ESPINAL
BK/PG 16185/187
51 RAILROAD ST
189-47

N/F
RAFAEL JAVIER
& MARIA JAVIER
BK/PG 6464/178
45 RAILROAD ST
PL 14085
189-48-1

N/F
JAVIER RAFAEL JR
& MARIA JAVIER
BK/PG 15611/222
41 RAILROAD ST
189-48-2

N/F
COLONY REALTY TRUST
BK/PG 10260/92
25 RAILROAD ST
189-49

N/F
COLONY REALTY TRUST
BK/PG 4648/253
13 RAILROAD ST
189-50

N/F
130-136 WEST STREET, LLC
BK/PG 10129/3
CERT# 15412
LCC 19576A
WEST STREET
190-11

N/F
MASSACHUSETTS ELECTRIC COMPANY
BK/PG -/-
50 WEST ST
189-59

N/F
LAWRENCE FAMILY DEVELOPMENT
AND EDUCATION FUND, INC.
BK/PG 4309/86
32 WEST STREET
189-58

N/F
MASSACHUSETTS ELECTRIC COMPANY
BK/PG 1074/21
425 HAVEHILL ST
PL 5594
189-56

N/F
MASSACHUSETTS BAY
TRANSPORTATION AUTHORITY
BK/PG 1299/162
MERRIMACK STREET
212-24

CONTINUED ON SHEET NO. 15

CONTINUED ON SHEET NO. 13

FOR PROFILE SEE SHEET NO. 22

SCALE: 1" = 20'

0 20 50 100

PROP TEMP EASEMENT
PROP TREE TRIMMING ALONG LIMIT OF CLEARING & GRUBBING
PROP CLEARING & GRUBBING
REM EXIST PVMT; PROP 4" LOAM & SEED (SEE CONSTRUCTION NOTE 19)
REM TREE
PROP FDP
PRC +43.06
REM TRACKS FROM STA 58+77 TO 70+07
PROP BIO RETENTION BASIN
RET TRACKS OUTSIDE LIMITS OF WORK
MEET EXIST SW & GC
CITY LAYOUT
RET CLF
PROP TEMP EASEMENT
PROP HMA DWY
MEET EXIST DWY (SAWCUT)
RET STONE
RET CLF
12' COMMON DRIVEWAY PL 14085
RET HMA CURB
PCR 11
PROP GC CORNER TYPE A
RET TREE; PROP TREE PROTECTION
PROP SAWCUT
PROP DRAINAGE SWALE
PRC +92.55
CONST B
PROP PERM EASEMENT
PROP TEMP EASEMENT
PROP CONCRETE WHEEL STOP (TYP)
MEET EXIST PAVEMENT
REM HMA BERM
RET HMA BERM
RET LP
PROP BIO RETENTION BASIN
PROP LP (TYP)
R&S CLF STA 52+90 TO 56+77
PROP PEA GRAVEL DIAGRAM (TYP)
PROP STONE FOR PIPE ENDS
REM TRACKS FROM STA 55+73 TO 57+54
PROP 4" LOAM & SEED (TYP)
57+98.32 LAWRENCE RAIL TRAIL B= 507+42.54 SIDEWALK BL
AREA SUBJECT TO AUL BK/PG 5465/325
504+88.19 SIDEWALK= 55+49.44 LAWRENCE RAIL TRAIL B
PROP 5' HMA SW (TYP)
PROP TEMP EASEMENT
RET TREE; PROP TREE PROTECTION
REM TRACKS FROM STA 49+88 TO 73+70
R&S CLF STA 54+18 TO STA 54+95
MASSACHUSETTS ELECTRIC EASEMENT BK/PG 1074/21
R&S WOOD FENCE STA 54+18 TO STA 54+85
RET TRACKS OUTSIDE LIMITS OF WORK
PRC +85.70
PROP BIO RETENTION BASIN
PRC +20.66
PRC +18.92
APPROX LOG (TYP)
R&S WOOD FENCE STA 52+70 TO STA 53+22
PROP TEMP EASEMENT
10" STEAMLINE EASEMENT BK/PG 1581/11
EXISTING RAILROAD
1-1/4"HDPE FIBER-VZ(MCI)
6"STEEL FIBER-AT&T
RR VAL MAP SEC. 7.4-2

DRAINAGE DETAILS
SEE SHEET 65

WATER SUPPLY ALTERATIONS
NONE

TRAFFIC SIGNAL CONDUIT
NONE

HIGHWAY GUARD DETAILS
NONE

NAD 83

N

LEGEND

PCR # = PEDESTRIAN CURB RAMP NUMBER

DWY # = DRIVEWAY NUMBER

= LIMIT OF DISTURBANCE

608930_HD5(CONSTRUCTION PLANS - NOI).DWG Plotted on 15-May-2023 10:23 AM

LAWRENCE
LMRC RAIL TRAIL

STATE	FED. AID PROJ. NO.	SHEET NO.	TOTAL SHEETS
MA	-	15	225
PROJECT FILE NO.	608930		

CONSTRUCTION PLANS - 10 OF 15

LEGEND
-·-·- = LIMIT OF DISTURBANCE

RAILROAD STREET
(PUBLIC)

BOURGOIN SQUARE PARK

HUBBARD PLACE
(PUBLIC)

WATER SUPPLY ALTERATIONS
NONE

TRAFFIC SIGNAL CONDUIT
NONE

HIGHWAY GUARD DETAILS
NONE

DRAINAGE DETAILS
SEE SHEET 66

FOR PROFILE SEE SHEET NO. 23

SCALE: 1" = 20'

NAD 83

CONTINUED ON SHEET NO. 16

CONTINUED ON SHEET NO. 14

608930_HD5(CONSTRUCTION PLANS - NOI).DWG Plotted on 15-May-2023 10:23 AM

LAWRENCE
LMRC RAIL TRAIL

STATE	FED. AID PROJ. NO.	SHEET NO.	TOTAL SHEETS
MA	-	16	225
PROJECT FILE NO. 608930			

CONSTRUCTION PLANS - 11 OF 15

MAY STREET (PUBLIC)

BLAKELIN STREET (PUBLIC)

ARCHER STREET (PUBLIC)

WENDELL STREET (PUBLIC)

CONTINUED ON SHEET NO. 17

CONTINUED ON SHEET NO. 15

FOR PROFILE SEE SHEET NO. 23

SCALE: 1" = 20'

N/F AA REAL ESTATE GROUP LLC BK/PG 17290/6 139–143 MAY ST 211–4

N/F JUANA E. VASQUEZ BK/PG 11983/179 135–137 MAY ST 211–5

N/F VICTOR HERNANDEZ BK/PG 9665/119 131–133 MAY ST 211–6

N/F OLGA CRUZ BK/PG 17319/10 127 MAY ST 211–7

N/F GILCITA MARTINEZ BK/PG 11269/46 125 MAY ST 211–8

N/F GILBERTO MOSQUEA & ARSENIA TORRES MANON BK/PG 15178/187 123 MAY ST 211–9

N/F LORENZO RODRIQUEZ BK/PG 5918/26 109 MAY ST 211–13

N/F SOLANGE ACEVEDO BK/PG 7575/167 103 MAY ST 211–14

N/F LUZ M. ANDUJAR & CRITIAN MANUEL GARCIA BK/PG 10051/321 97 ½ RAILROAD ST 190–3–2

N/F 111 MAY STREET TRUST BK/PG 4482/130 119 MAY ST 211–10

N/F EIGHT BLAKELIN, LLC BK/PG 11407/199 8 BLAKELIN ST 211–17

N/F ARCHER AUTO CO., INC. BK/PG 4482/160 25–27 ARCHER ST PL 15983 190–38

N/F ARCHER AUTO CO., INC. BK/PG 1728/288 30–34 ARCHER ST PL 15983 190–37

N/F MASSACHUSETTS BAY TRANSPORTATION AUTHORITY BK/PG 1299/162 MERRIMACK STREET 212–24

N/F DISMANTLING, LLC BK/PG 15225/52 26 WENDELL STREET 190–26

PROP TEMP EASEMENT

R&S CLF STA 69+16 TO 69+47

PRC +85.46

PRC +79.99

REM TRACKS FROM STA 58+77 TO 70+07

PROP FDP

REM TRACKS FROM STA 49+88 TO 73+70

PRC +64.45

REM TREE

CONST ℄

ENCAMPMENT (TYP)

APPROX LOG (TYP)

PROP PERM EASEMENT

PROP 4" LOAM & SEED (TYP)

PRC +78.12

R&S CLF STA 65+13 TO 67+28

PROP 5' HMA SW (TYP)

PROP DRAINAGE SWALE

PRC +81.62

PROP TREE TRIMMING ALONG LIMIT OF CLEARING & GRUBBING

PROP CLEARING & GRUBBING

PRC +50.42

PEA GRAVEL DIAPHRAGM (TYP)

RET TREE; PROP TREE PROTECTION (TYP)

10' STEAMLINE EASEMENT BK/PG 1581/11

PRC +05.46

R&S CLF STA 62+18 TO 69+49

REM CEM CONC PROP SAWCUT

PROP BIO RETENTION BASIN

PROP TEMP EASEMENT

RET CLF

PROP TREE TRIMMING ALONG LIMIT OF CLEARING & GRUBBING

PROP SEATING (SEE LANDSCAPE PLANS)

PROP CLEARING & GRUBBING

PROP PERM EASEMENT

RET

STONE RETAINING WALL

CONC. PIERS

EXISTING RAILROAD

5"STEEL FIBER–AT&T

UPC 8019

UPC 8018

UPC 8017

4" HDPE FIBER–VZ(MCI)

RR VAL MAP SEC. 7.4–2

CITY LAYOUT

1886 CITY LAYOUT

DRIVEWAY EASEMENT BK/PG 1740/244

CLF

TREELINE(TYP.)

CONC.

RETAINING WALL

CLF WITH BARBED WIRE

519 518 517 516 515 514 69 68 67 66 65 64

65.50 65.00

10" 14" 20" 50" 27" 24"

LEGEND

— · — · — = LIMIT OF DISTURBANCE

WATER SUPPLY ALTERATIONS
NONE

DRAINAGE DETAILS
NONE

TRAFFIC SIGNAL CONDUIT
NONE

HIGHWAY GUARD DETAILS
NONE

NAD 83

N

608930_HD5(CONSTRUCTION PLANS - NOI).DWG Plotted on 15-May-2023 10:24 AM

LAWRENCE
LMRC RAIL TRAIL

STATE	FED. AID PROJ. NO.	SHEET NO.	TOTAL SHEETS
MA	-	17	225
PROJECT FILE NO.	608930		

CONSTRUCTION PLANS - 12 OF 15

LEGEND

-·-·- = LIMIT OF DISTURBANCE

WATER SUPPLY ALTERATIONS
NONE

TRAFFIC SIGNAL CONDUIT
NONE

HIGHWAY GUARD DETAILS
NONE

DRAINAGE DETAILS
NONE

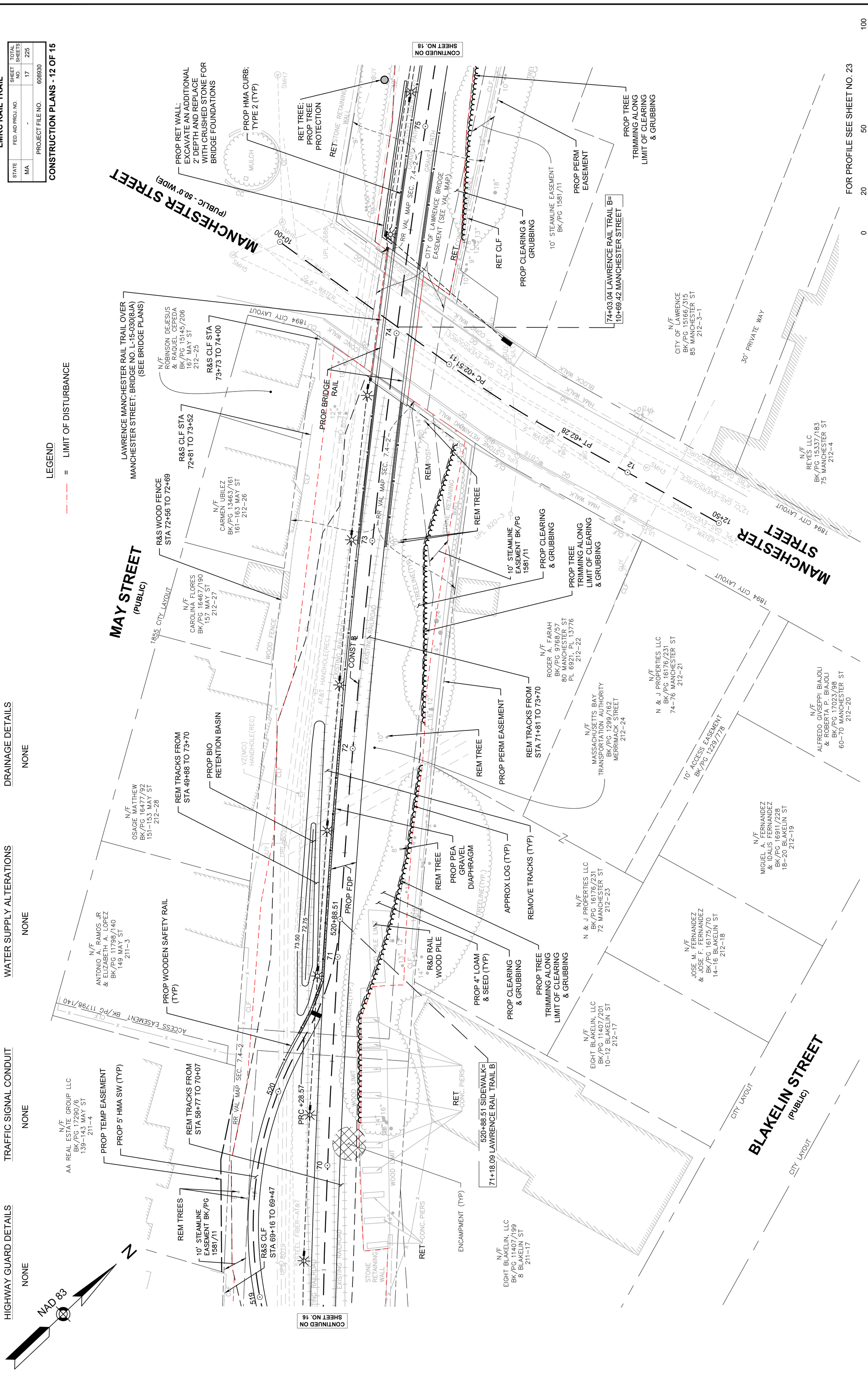

608930_HD5(CONSTRUCTION PLANS - NOI).DWG Plotted on 15-May-2023 10:24 AM

LAWRENCE
LMRC RAIL TRAIL

STATE	FED. AID PROJ. NO.	SHEET NO.	TOTAL SHEETS
MA	-	18	225
PROJECT FILE NO. 608930			

CONSTRUCTION PLANS - 13 OF 15

LEGEND
= TEMPORARY IMPACT
= PERMANENT IMPACT
= LIMIT OF DISTURBANCE

WATER SUPPLY ALTERATIONS
NONE

TRAFFIC SIGNAL CONDUIT
NONE

HIGHWAY GUARD DETAILS
NONE

DRAINAGE DETAILS
NONE

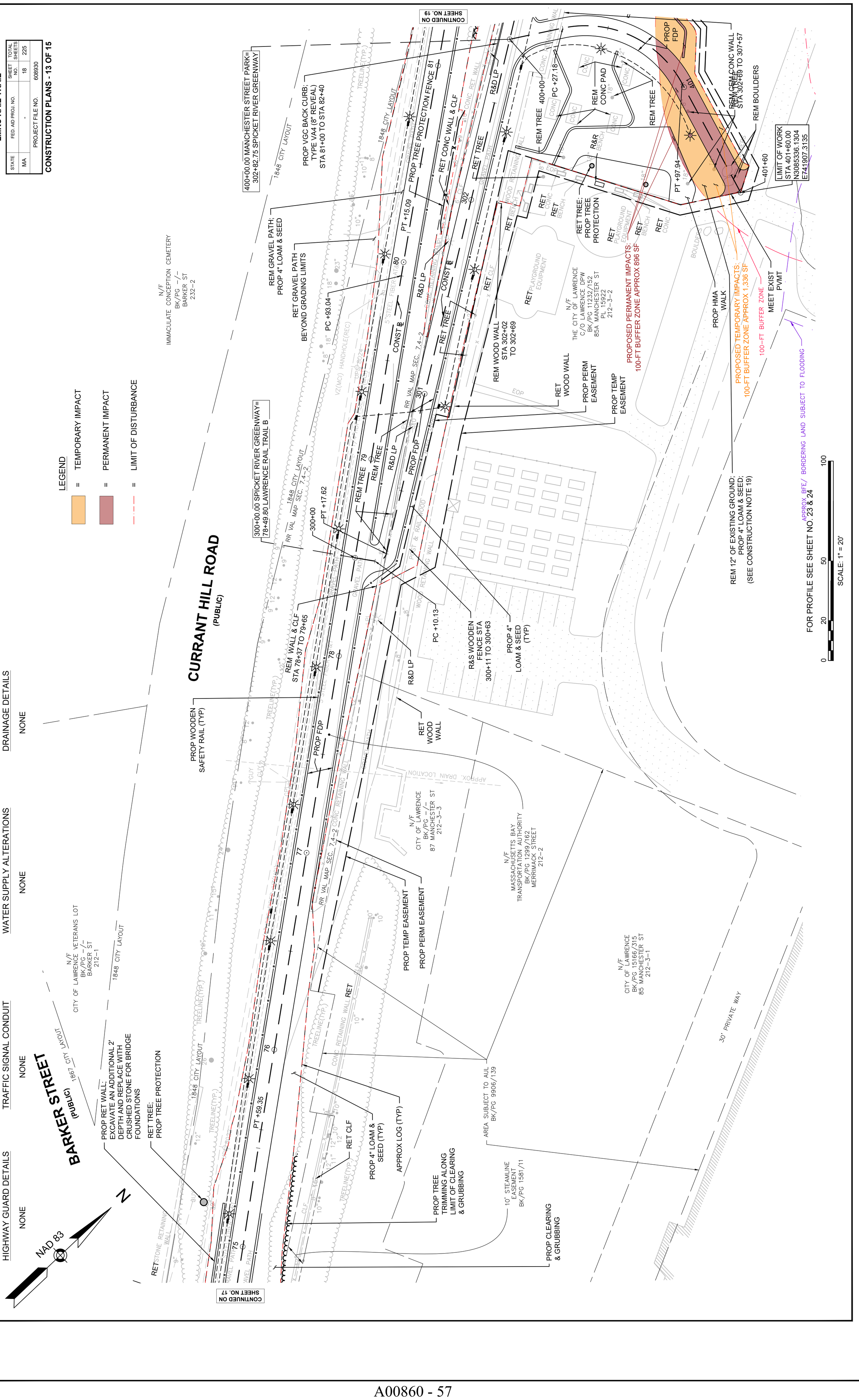

608930_HD5(CONSTRUCTION PLANS - NOI).DWG Plotted on 15-May-2023 10:24 AM

LAWRENCE
LMRC RAIL TRAIL

STATE	FED. AID PROJ. NO.	SHEET NO.	TOTAL SHEETS
MA	-	19	225
PROJECT FILE NO.	608930		

CONSTRUCTION PLANS - 14 OF 15

LEGEND
= TEMPORARY IMPACT
= PERMANENT IMPACT
= LIMIT OF DISTURBANCE

WATER SUPPLY ALTERATIONS
NONE

DRAINAGE DETAILS
NONE

TRAFFIC SIGNAL CONDUIT
NONE

HIGHWAY GUARD DETAILS
NONE

NAD 83

CONTINUED ON SHEET NO. 18

CONTINUED ON SHEET NO. 20

FOR PROFILE SEE SHEET NO. 24

SCALE: 1" = 20'

0 20 50 100

CURRANT HILL ROAD
(PUBLIC)

HIGHWAY GUARD DETAILS

NONE

TRAFFIC SIGNAL CONDUIT

NONE

WATER SUPPLY ALTERATIONS

NONE

DRAINAGE DETAILS

NONE

LAWRENCE
LMRC RAIL TRAIL

STATE	FED. AID PROJ. NO.	SHEET NO.	TOTAL SHEETS
MA	-	20	225
PROJECT FILE NO.	608930		

CONSTRUCTION PLANS - 15 OF 15

608930_HDS(CONSTRUCTION PLANS - NOI).DWG Plotted on 15-May-2023 10:24 AM

Proposal No. 608930-128034

A00860 - 59

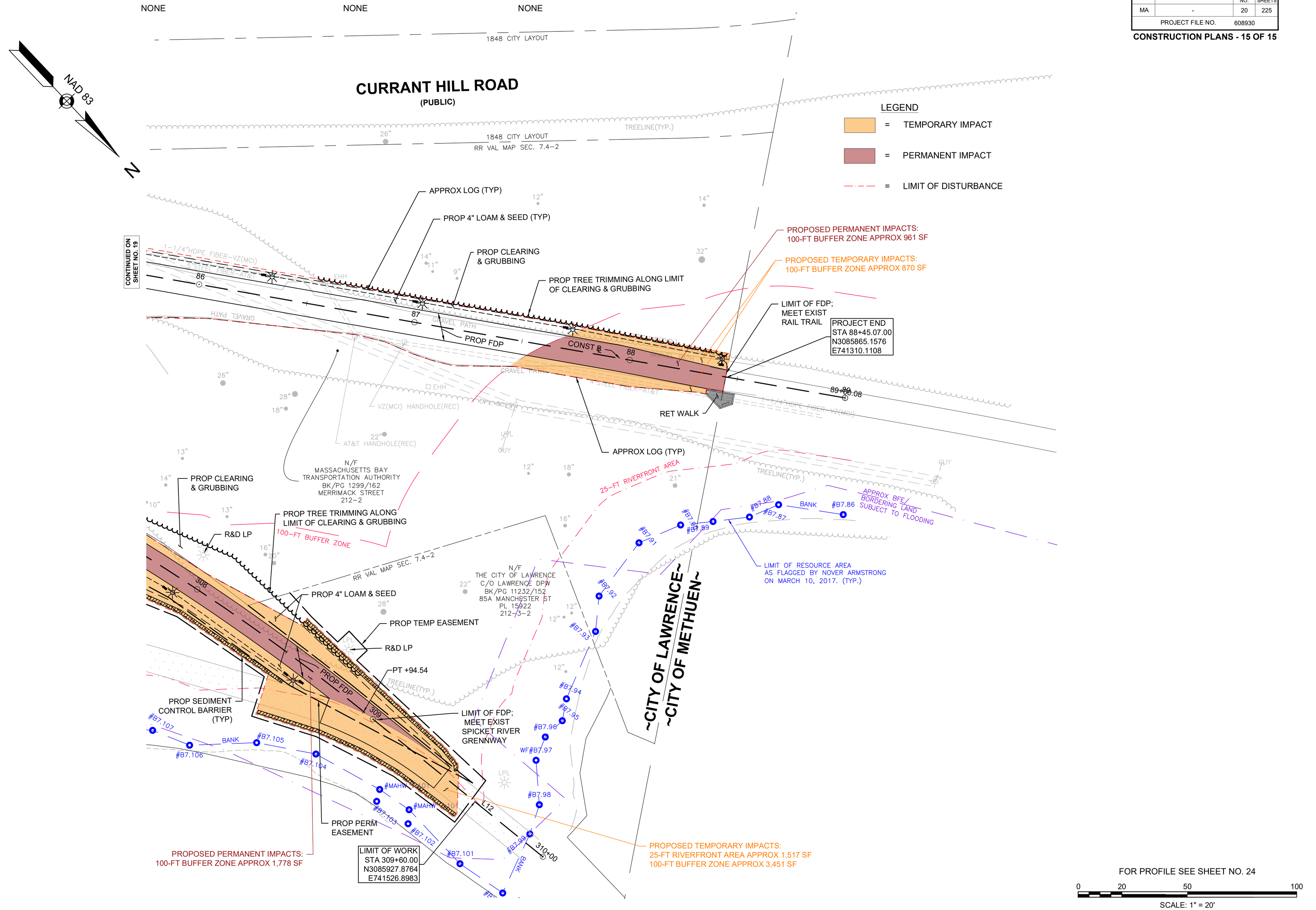

608930_HD6(PROFILE).DWG Plotted on 16-Aug-2023 10:49 AM

LAWRENCE
LMRC RAIL TRAIL

STATE	FED. AID PROJ. NO.	SHEET NO.	TOTAL SHEETS
MA	-	21	225
PROJECT FILE NO.	608930		

PROFILES - 1 OF 5

LMRC RAIL TRAIL

HIGH POINT ELEV = 53.51
HIGH POINT STA = 10+66.79
PVI STA = 10+72.00
PVI ELEV = 53.60
A.D. = -1.20%
K = 50.08
60' VC
930.7' SSD
PVT: 11+02 ELEV: 53.39
PVC: 10+42 ELEV: 53.45
MATCH EXISTING SIDEWALK PROFILE
GRADE BREAK STA = 12+39.00
ELEV = 52.42
-0.70%
0.50%
-0.50%
ELEV = 53.22
GRADE BREAK STA = 9+96.00
ELEV = 53.47
GRADE BREAK STA = 9+45.50
ELEV = 53.22
GRADE BREAK STA = 8+95.00
ELEV = 53.47
GRADE BREAK STA = 8+44.50
ELEV = 53.22
GRADE BREAK STA = 7+94.00
ELEV = 53.44
GRADE BREAK STA = 7+49.50
ELEV = 53.22
GRADE BREAK STA = 7+05.00
ELEV = 53.47
GRADE BREAK STA = 6+54.00
ELEV = 53.22
GRADE BREAK STA = 6+04.00
ELEV = 53.44
GRADE BREAK STA = 5+61.00
0.80%
LOW POINT ELEV = 51.57
LOW POINT STA = 3+06.26
PVI STA = 3+15.00
PVI ELEV = 51.46
A.D. = 1.31%
K = 57.45
75' VC
PVT: 3+52.50 ELEV: 51.76
PVC: 2+77.50 ELEV: 51.64
GRADE BREAK STA = 1+28.50
ELEV = 52.04
4.50%
GRADE BREAK STA = 1+35.50
ELEV = 52.35
-0.50%
1.50%
GRADE BREAK STA = 1+20.00
ELEV = 51.91
EXISTING GROUND
PROPOSED GROUND
LAWRENCE MANCHESTER RAIL TRAIL
OVER SOUTH CANAL
(SEE BRIDGE PLANS)
EXISTING ELEV
PROPOSED ELEV
Benchmark "TBM J"
RR SPIKE IN UP
Elevation = 53.68'
Sta. 2+16.88, 46.25 RT
NAVD 88 BASE ELEV 30.00

FOR CONSTRUCTION PLAN: SEE SHEET NO. 6-8

LMRC RAIL TRAIL

HIGH POINT ELEV = 52.95
HIGH POINT STA = 33+78.14
PVI STA = 33+63.08
PVI ELEV = 53.07
A.D. = -2.00%
K = 29.99
60' VC
569.3' SSD
PVT: 33+93.08 ELEV: 52.92
PVC: 33+33.08 ELEV: 52.61
-0.50%
1.50%
7.50%
-1.15%
-1.50%
-7.50%
0.90%
ESSEX STREET
HIGH POINT ELEV = 53.13
HIGH POINT STA = 32+16.18
PVI STA = 32+27.08
PVI ELEV = 53.27
A.D. = -2.19%
K = 27.34
60' VC
521.8' SSD
PVT: 32+57.08 ELEV: 52.82
PVC: 31+97.08 ELEV: 53.06
GRADE BREAK STA = 32+66.08
ELEV = 52.69
0.70%
LOW POINT ELEV = 51.83
LOW POINT STA = 29+91.58
PVI STA = 30+00.08
PVI ELEV = 51.69
A.D. = 1.19%
K = 83.71
100' VC
PVT: 30+50.08 ELEV: 52.04
PVC: 29+50.08 ELEV: 51.93
HIGH POINT ELEV = 52.86
HIGH POINT STA = 27+30.11
PVI STA = 27+23.08
PVI ELEV = 53.06
A.D. = -1.09%
K = 137.09
150' VC
1061.2' SSD
PVT: 27+98.08 ELEV: 52.69
PVC: 26+48.08 ELEV: 52.61
0.60%
6.50%
GRADE BREAK STA = 25+22.08
ELEV = 51.27
INTERSECTION OF BROADWAY,
WATER STREET AND CANAL STREET
EXISTING ELEV
PROPOSED ELEV
Benchmark "TBM H"
26BF DISC
Elevation = 52.12'
Sta. 33+33.04, 27.68' RT
STA 32+89.30 LAWRENCE RAIL TRAIL B ℄ =
STA 91+36.49 ESSEX STREET B ℄
NAVD 88 BASE ELEV 30.00

CONTINUED ON SHEET NO.22

HOR. SCALE IN FEET 0 40 80
VER. SCALE IN FEET 0 8 16

FOR CONSTRUCTION PLAN: SEE SHEET NO. 8-10

LAWRENCE
LMRC RAIL TRAIL

STATE	FED. AID PROJ. NO.	SHEET NO.	TOTAL SHEETS
MA	-	22	225
PROJECT FILE NO.		608930	

PROFILES - 2 OF 5

608930_HD6(PROFILE).DWG Plotted on 16-Aug-2023 11:08 AM

Proposal No. 608930-128034

A00860 - 61

LMRC RAIL TRAIL

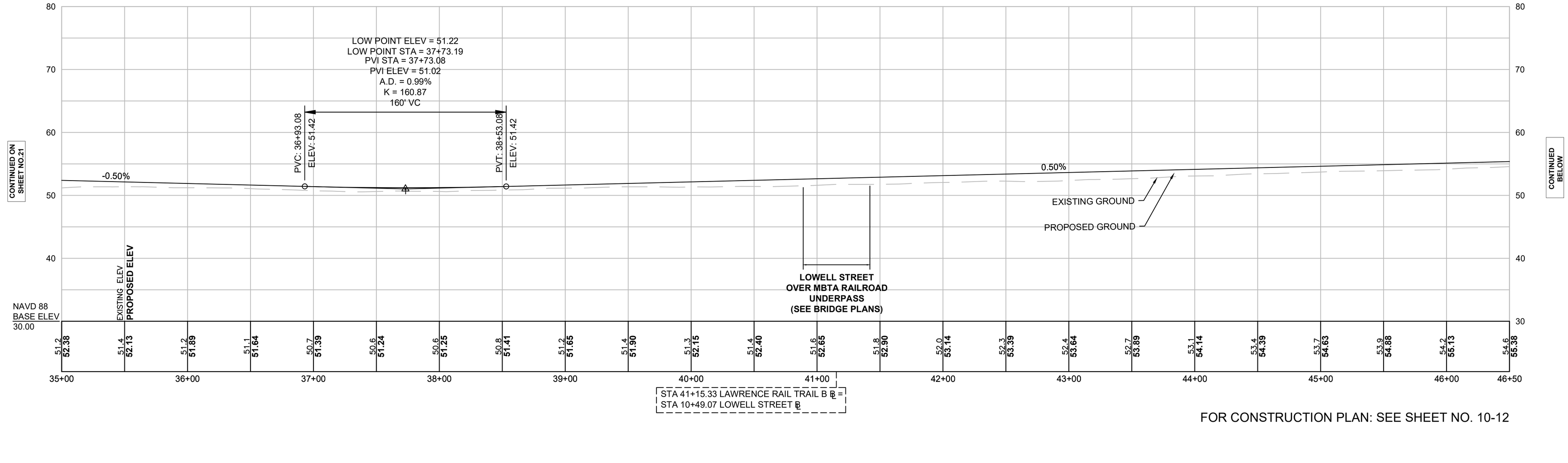

FOR CONSTRUCTION PLAN: SEE SHEET NO. 10-12

LMRC RAIL TRAIL

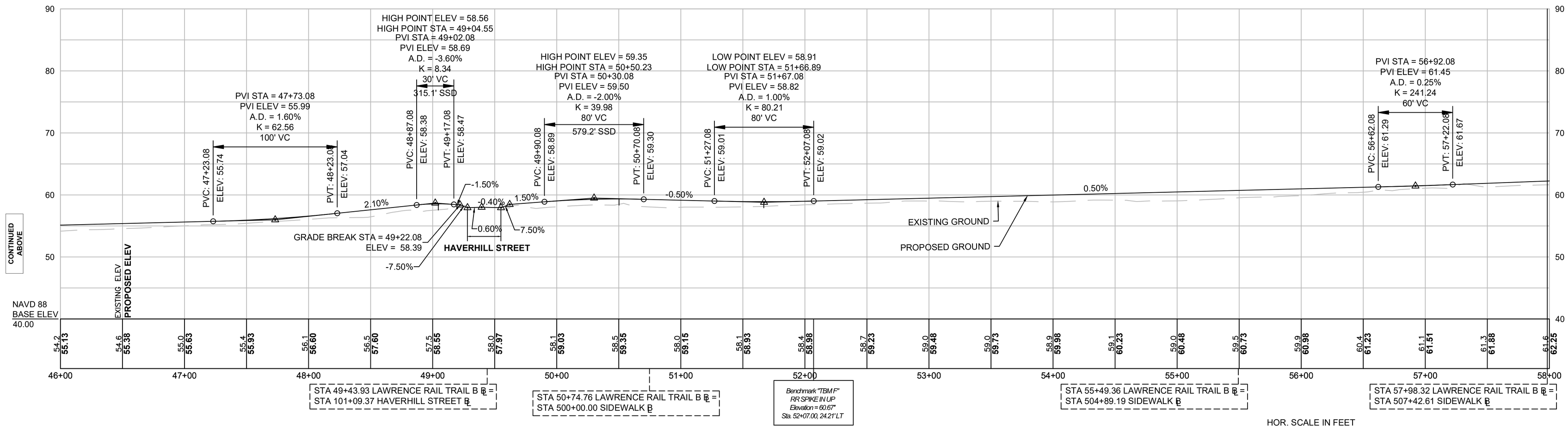

FOR CONSTRUCTION PLAN: SEE SHEET NO. 12-14

HOR. SCALE IN FEET
40 0 40 80
VER. SCALE IN FEET
8 0 8 16

608930_HD6(PROFILE).DWG Plotted on 16-Aug-2023 11:42 AM

LAWRENCE
LMRC RAIL TRAIL

STATE	FED. AID PROJ. NO.	SHEET NO.	TOTAL SHEETS
MA	-	23	225
	PROJECT FILE NO.	608930	

PROFILES - 3 OF 5

LMRC RAIL TRAIL

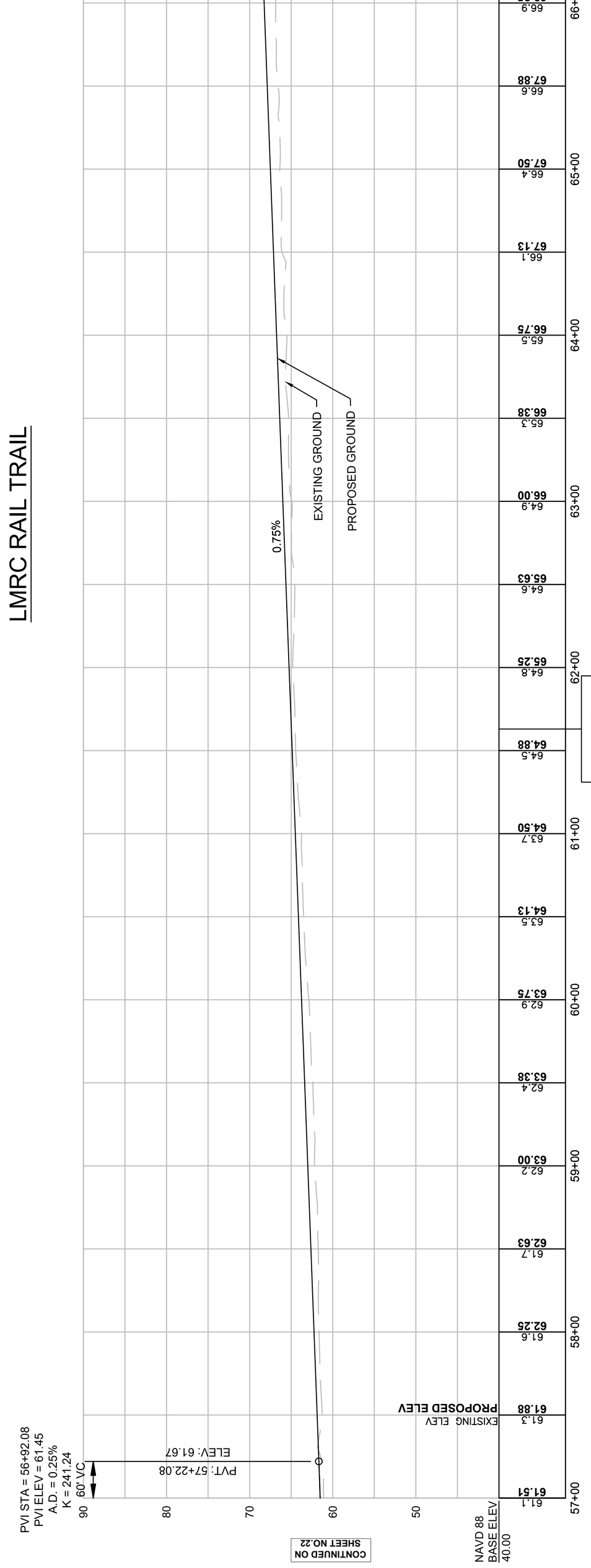

FOR CONSTRUCTION PLAN: SEE SHEET NO. 14-16

LMRC RAIL TRAIL

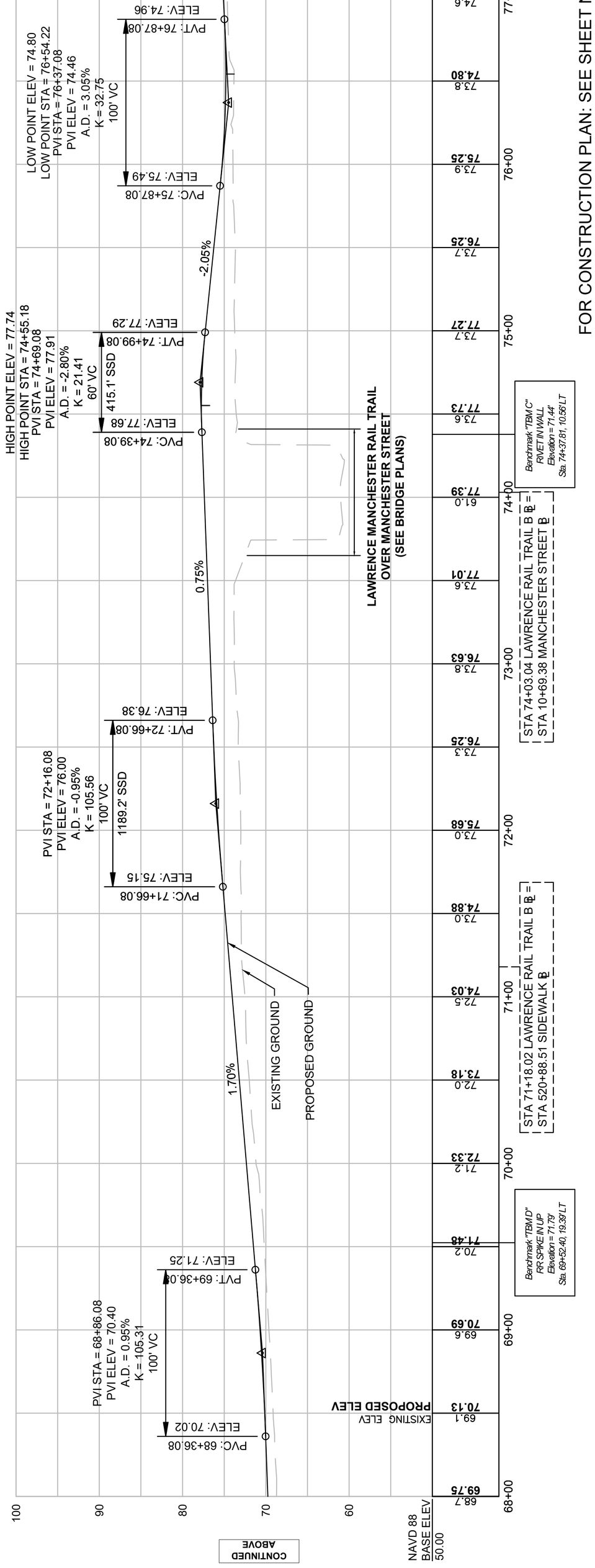

FOR CONSTRUCTION PLAN: SEE SHEET NO. 16-18

LMRC RAIL TRAIL

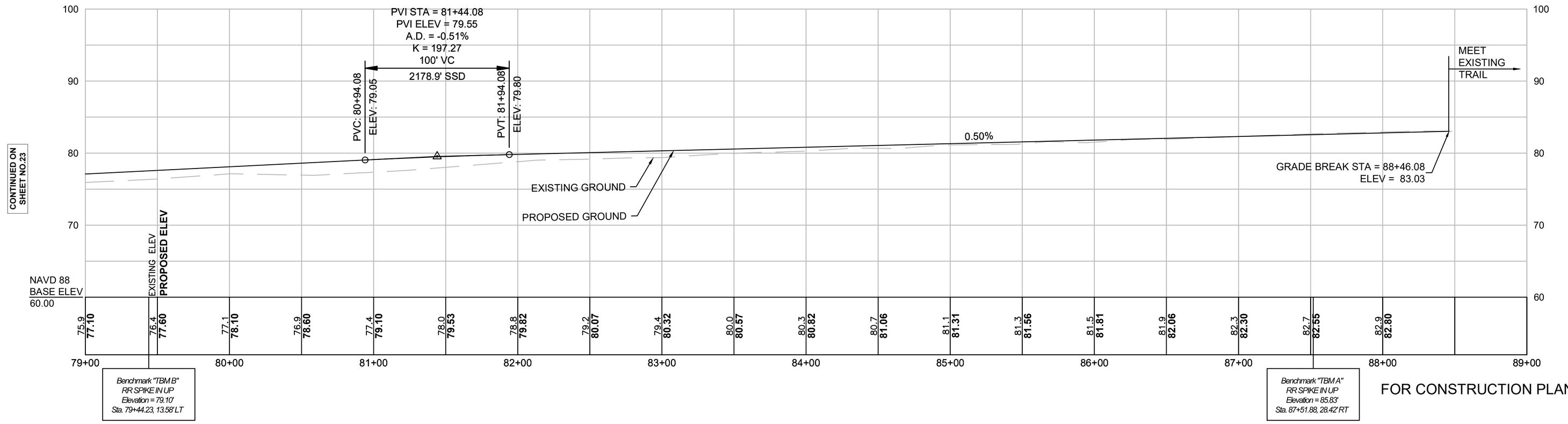

FOR CONSTRUCTION PLAN: SEE SHEET NO. 18-20

LAWRENCE
LMRC RAIL TRAIL

STATE	FED. AID PROJ. NO.	SHEET NO.	TOTAL SHEETS
MA	-	24	225
PROJECT FILE NO.		608930	

PROFILES - 4 OF 5

608930_HDb(PROFILE).DWG Plotted on 16-Aug-2023 11:43 AM

SPICKET RIVER GREENWAY

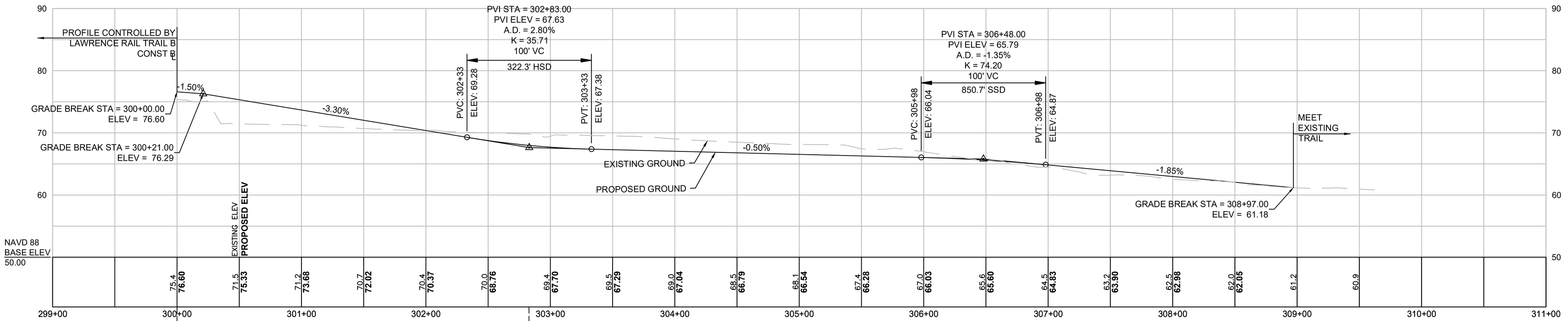

FOR CONSTRUCTION PLAN: SEE SHEET NO. 18-20

MANCHESTER STREET PARK

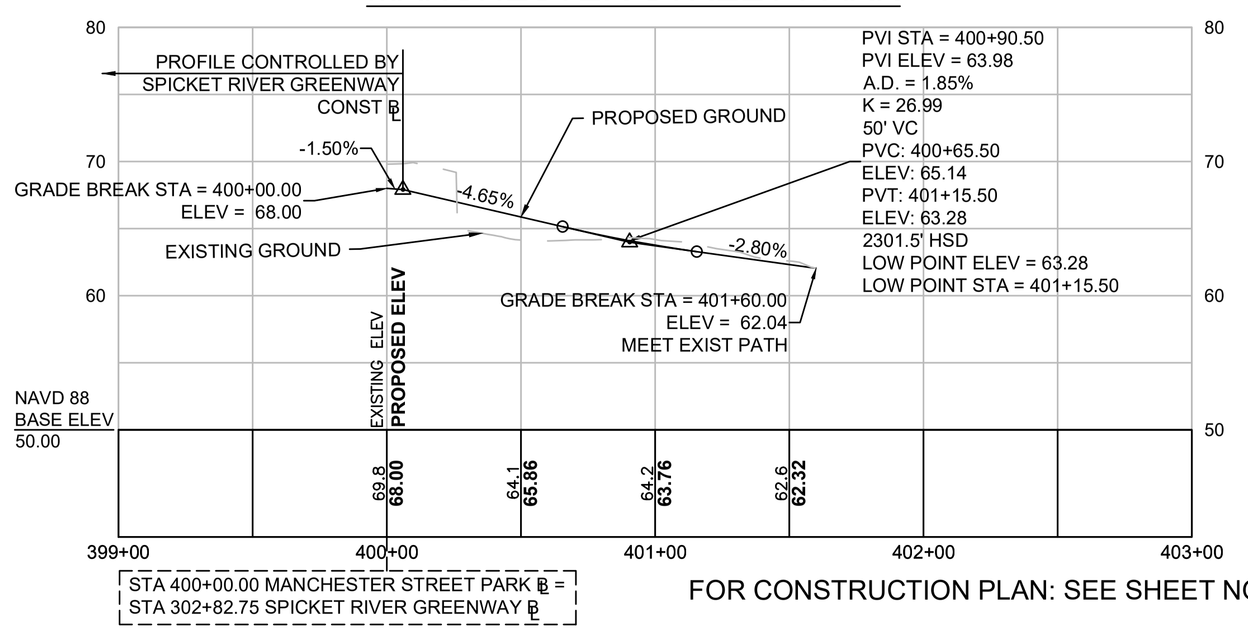

FOR CONSTRUCTION PLAN: SEE SHEET NO. 18 & 19

HOR. SCALE IN FEET
40 0 40 80
VER. SCALE IN FEET
8 0 8 16

LANDSCAPE_SHEETS.DWG Plotted on 10-May-2023 4:21 PM

LAWRENCE
LMRC RAIL TRAIL

STATE	FED. AID PROJ. NO.	SHEET NO.	TOTAL SHEETS
MA	-	97	225
	PROJECT FILE NO. 608930		

LANDSCAPE PLAN - 7 OF 16

SITE IMPROVEMENT LEGEND

S1	WEATHERING STEEL VERTICAL GATEWAY ELEMENT	S14	GAMING TABLE AND CHAIRS
S2	WEATHERING STEEL SLOPED AND BATTERED WALL WITH WOOD BENCH	S14A	TABLE AND CHAIRS
S3	WEATHERING STEEL SLOPED PLANTER WALL	S15	PICNIC TABLE (*HANDICAPPED)
S4	WEATHERING STEEL SLOPED BENCH WALL	S16	SITE BENCH
S5a	TRAIL PATH LIGHT	S17	BIKE RACK
S5b	DECORATIVE COLUMN LIGHT	S18	TRASH RECEPTACLE
S6	TIMBER SEAT STEPS	S19	BASKETBALL HOOP ASSEMBLY
S7	STACKED TIMBER SEATING PLATFORM	S20	6 FT CHAIN LINK FENCE
S8	SCULPTURAL SWING ELEMENT	S21	WEATHERING STEEL SCREEN FENCE - TYPE 1
S9	SPECIAL CONCRETE PERFORMANCE PLATFORMS	S22	WEATHERING STEEL SCREEN FENCE - TYPE 2
S10	SPECIAL CONCRETE SKATEBOARD PUMP TRACK PATH WITH EMBEDS	S23	NOT USED
S11	SPECIAL CONCRETE SEAT WALL	S24	WOODEN SAFETY RAIL
S11a	SPECIAL CONCRETE SEAT WALL WITH TIMBER SEAT	S25	WOOD RAIL FENCE WITH GUARDRAIL
S12	SPECIAL CONCRETE SEAT STEPS		
S13	SPECIAL STEPPING STONES		

PLANTING LEGEND

- EXISTING TREE TO REMAIN & TREE PROTECTION
- DECIDUOUS TREE
- FLOWERING TREE
- EVERGREEN TREE
- SHRUB & ORNAMENTAL GRASS PLANTING
- MassDOT Mix 765.411; SHORT GRASSLAND MIX
- MassDOT Mix 765.554; WETLAND SEED SEASONAL FLOODED MIX

GENERAL NOTE:
1. REFER TO PRIOR INVASIVE SPECIES REMOVAL PROGRAM PER CITY
2. MOW ZONE - 5 FT OFFSET FROM THE PATH

- LIMIT OF WORK
- TEMPORARY EASEMENT LINE

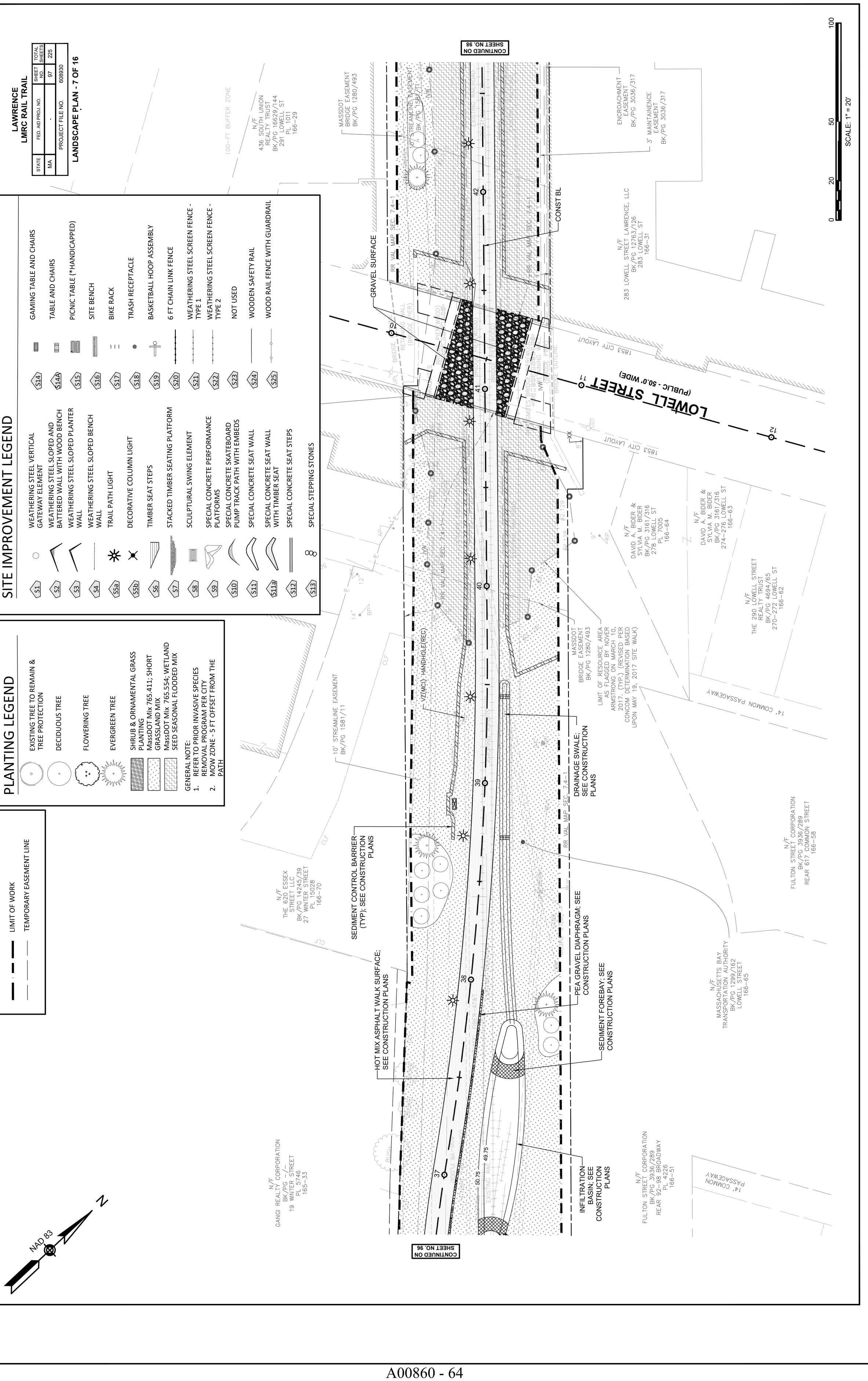

LIMIT OF WORK
TEMPORARY EASEMENT LINE

NAD 83

N

PLANTING LEGEND

- EXISTING TREE TO REMAIN & TREE PROTECTION
- DECIDUOUS TREE
- FLOWERING TREE
- EVERGREEN TREE
- SHRUB & ORNAMENTAL GRASS PLANTING
- MassDOT Mix 765.411; SHORT GRASSLAND MIX
- MassDOT Mix 765.554; WETLAND SEED SEASONAL FLOODED MIX

GENERAL NOTE:
1. REFER TO PRIOR INVASIVE SPECIES REMOVAL PROGRAM PER CITY
2. MOW ZONE - 5 FT OFFSET FROM THE PATH

SITE IMPROVEMENT LEGEND

- S1 WEATHERING STEEL VERTICAL GATEWAY ELEMENT
- S2 WEATHERING STEEL SLOPED AND BATTERED WALL WITH WOOD BENCH
- S3 WEATHERING STEEL SLOPED PLANTER WALL
- S4 WEATHERING STEEL SLOPED BENCH WALL
- S5a TRAIL PATH LIGHT
- S5b DECORATIVE COLUMN LIGHT
- S6 TIMBER SEAT STEPS
- S7 STACKED TIMBER SEATING PLATFORM
- S8 SCULPTURAL SWING ELEMENT
- S9 SPECIAL CONCRETE PERFORMANCE PLATFORMS
- S10 SPECIAL CONCRETE SKATEBOARD PUMP TRACK PATH WITH EMBEDS
- S11 SPECIAL CONCRETE SEAT WALL
- S11a SPECIAL CONCRETE SEAT WALL WITH TIMBER SEAT
- S12 SPECIAL CONCRETE SEAT STEPS
- S13 SPECIAL STEPPING STONES
- S14 GAMING TABLE AND CHAIRS
- S14A TABLE AND CHAIRS
- S15 PICNIC TABLE (*HANDICAPPED)
- S16 SITE BENCH
- S17 BIKE RACK
- S18 TRASH RECEPTACLE
- S19 BASKETBALL HOOP ASSEMBLY
- S20 6 FT CHAIN LINK FENCE
- S21 WEATHERING STEEL SCREEN FENCE - TYPE 1
- S22 WEATHERING STEEL SCREEN FENCE - TYPE 2
- S23 NOT USED
- S24 WOODEN SAFETY RAIL
- S25 WOOD RAIL FENCE WITH GUARDRAIL

LAWRENCE
LMRC RAIL TRAIL

STATE	FED. AID PROJ. NO.	SHEET NO.	TOTAL SHEETS
MA	-	98	225
PROJECT FILE NO.	608930		

LANDSCAPE PLAN - 8 OF 16

N/F
HECTOR B. CHECO
BK/PG 16108/310
17 MORTON ST
166-21

100-FT BUFFER ZONE

N/F
436 SOUTH UNION
REALTY TRUST
BK/PG 16629/144
291 LOWELL ST
PL 1011
166-29

N/F
MASSACHUSETTS BAY
TRANSPORTATION AUTHORITY
BK/PG 1299/162
HAVERHILL STREET
167-2

N/F
DAKE, LLC
BK/PG 9501/326
27-31 MORTON ST
PL 4418
166-19

N/F
LAWRENCE HOUSING
AUTHORITY
BK/PG -/-
33-47 MORTON ST
166-18

MASSDOT
BRIDGE EASEMENT
BK/PG 1280/493

MITIGATED WETLAND, SEE CONSTRUCTION PLANS,
WETLAND SEEDED WITH MassDOT MIX 765.554;
WETLAND SEED SEASONAL FLOODED MIX

SEDIMENT CONTROL BARRIER (TYP);
SEE CONSTRUCTION PLANS

BOTANICAL NAME: NYSSA SYLVATICA
COMMON NAME: BLACK TUPELO
QUANTITY: 2
SIZE: 2" CAL. B&B

BOTANICAL NAME: ACER RUBRUM
COMMON NAME: RED MAPLE
QUANTITY: 1
SIZE: 2" CAL. B&B

HOT MIX ASPHALT WALK SURFACE;
SEE CONSTRUCTION PLANS

RR VAL MAP SEC. 7.4-1

RR VAL MAP SEC. 7.4-2

10' STREAMLINE EASEMENT
BK/PG 1587/71

CONTINUED ON SHEET NO. 97

CONTINUED ON SHEET NO. 99

43 44 45 46 47 48

EXISTING RAILROAD

STONE RETAINING WALL

LIMIT OF RESOURCE AREA AS FLAGGED BY NOVER ARMSTRONG ON MARCH 10, 2017. (TYP.) (REVISED PER CONCOM DETERMINATION BASED UPON MAY 19, 2017 SITE WALK)

CONST BL

BOTANICAL NAME: ACER RUBRUM
COMMON NAME: RED MAPLE
QUANTITY: 3
SIZE: 2" CAL. B&B

ENCROACHMENT
EASEMENT
BK/PG 3036/317

3' MAINTAINENCE
EASEMENT
BK/PG 3036/317

N/F
283 LOWELL STREET LAWRENCE, LLC
BK/PG 12763/126
283 LOWELL ST
166-31

OLIVER PLACE (PRIVATE)

CLYDE LANE
(PRIVATE)

N/F
MONICAH M. MARSH
BK/PG 14131/253
10-14 BRADFORD PLACE
166-40

N/F
CITY OF LAWRENCE
BK/PG 10095/356
8 BRADFORD PLACE
166-41

OLIVER PLACE (PRIVATE)

N/F
5-9 MILL STREET, LLC
BK/PG 15947/238
135 BRADFORD
167-1

0 20 50 100
SCALE: 1" = 20'

LANDSCAPE_SHEETS.DWG Plotted on 10-May-2023 4:23 PM

Proposal No. 608930-128034

A00860 - 65

LANDSCAPE_SHEETS.DWG Plotted on 10-May-2023 4:24 PM

LAWRENCE
LMRC RAIL TRAIL

STATE	FED. AID PROJ. NO.	SHEET NO.	TOTAL SHEETS
MA	-	99	225
	PROJECT FILE NO. 608930		

LANDSCAPE PLAN - 9 OF 16

SITE IMPROVEMENT LEGEND

S1	WEATHERING STEEL VERTICAL GATEWAY ELEMENT	S14	GAMING TABLE AND CHAIRS
S2	WEATHERING STEEL SLOPED AND BATTERED WALL WITH WOOD BENCH	S14A	TABLE AND CHAIRS
S3	WEATHERING STEEL SLOPED PLANTER WALL	S15	PICNIC TABLE (*HANDICAPPED)
S4	WEATHERING STEEL SLOPED BENCH WALL	S16	SITE BENCH
S5a	TRAIL PATH LIGHT	S17	BIKE RACK
S5b	DECORATIVE COLUMN LIGHT	S18	TRASH RECEPTACLE
S6	TIMBER SEAT STEPS	S19	BASKETBALL HOOP ASSEMBLY
S7	STACKED TIMBER SEATING PLATFORM	S20	6 FT CHAIN LINK FENCE
S8	SCULPTURAL SWING ELEMENT	S21	WEATHERING STEEL SCREEN FENCE - TYPE 1
S9	SPECIAL CONCRETE PERFORMANCE PLATFORMS	S22	WEATHERING STEEL SCREEN FENCE - TYPE 2
S10	SPECIAL CONCRETE SKATEBOARD PUMP TRACK PATH WITH EMBEDS	S23	NOT USED
S11	SPECIAL CONCRETE SEAT WALL	S24	WOODEN SAFETY RAIL
S11a	SPECIAL CONCRETE SEAT WALL WITH TIMBER SEAT	S25	WOOD RAIL FENCE WITH GUARDRAIL
S12	SPECIAL CONCRETE SEAT STEPS		
S13	SPECIAL STEPPING STONES		

PLANTING LEGEND

- EXISTING TREE TO REMAIN & TREE PROTECTION
- DECIDUOUS TREE
- FLOWERING TREE
- EVERGREEN TREE
- SHRUB & ORNAMENTAL GRASS PLANTING
- MassDOT Mix 765.411; SHORT GRASSLAND MIX
- MassDOT Mix 765.554; WETLAND SEED SEASONAL FLOODED MIX

GENERAL NOTE:
1. REFER TO PRIOR INVASIVE SPECIES REMOVAL PROGRAM PER CITY
2. MOW ZONE - 5 FT OFFSET FROM THE PATH

- LIMIT OF WORK
- TEMPORARY EASEMENT LINE

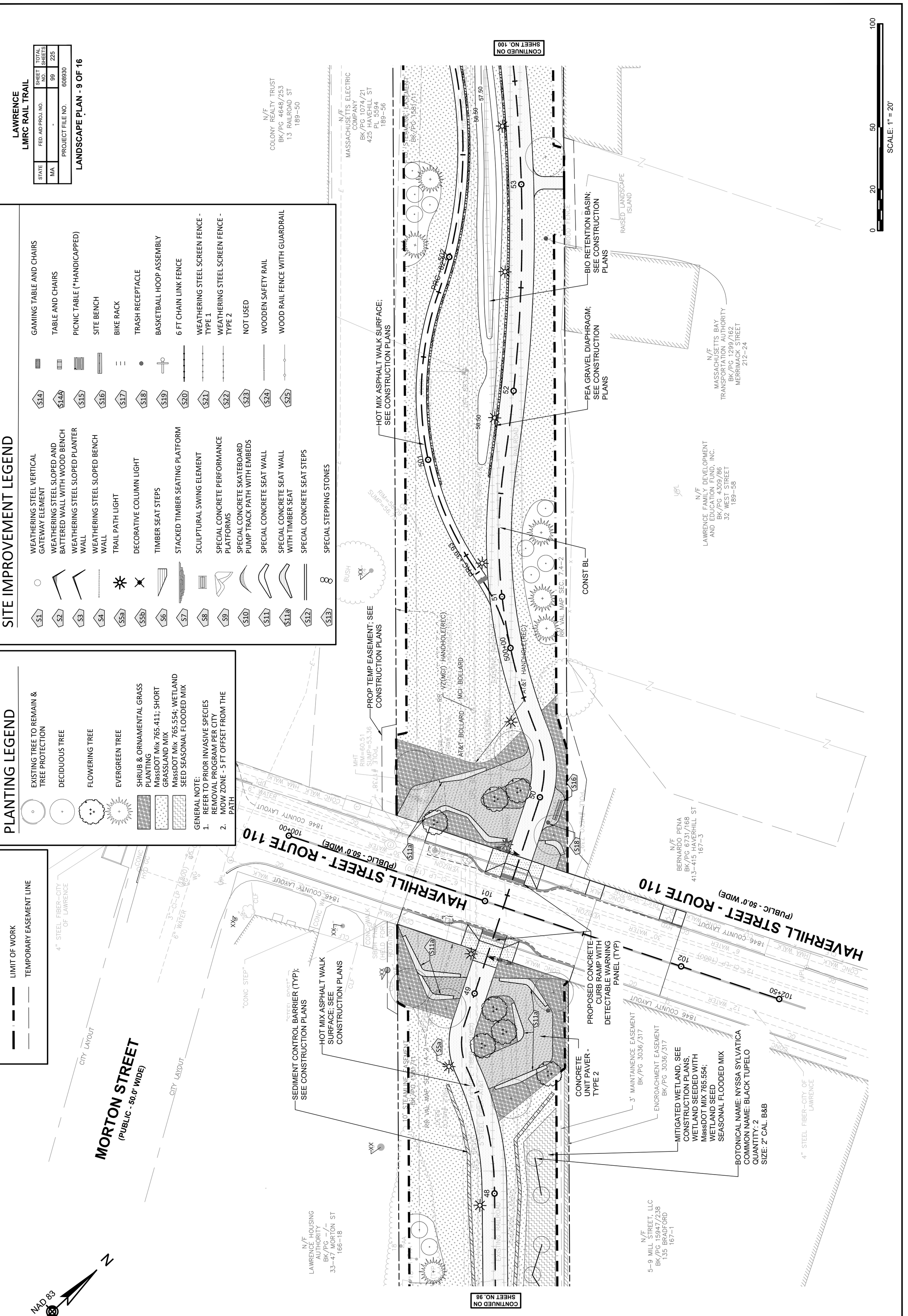

608930_HD10(CONSTRUCTION DETAILS).DWG Plotted on 15-Aug-2023 11:35 AM

Proposal No. 608930-128034

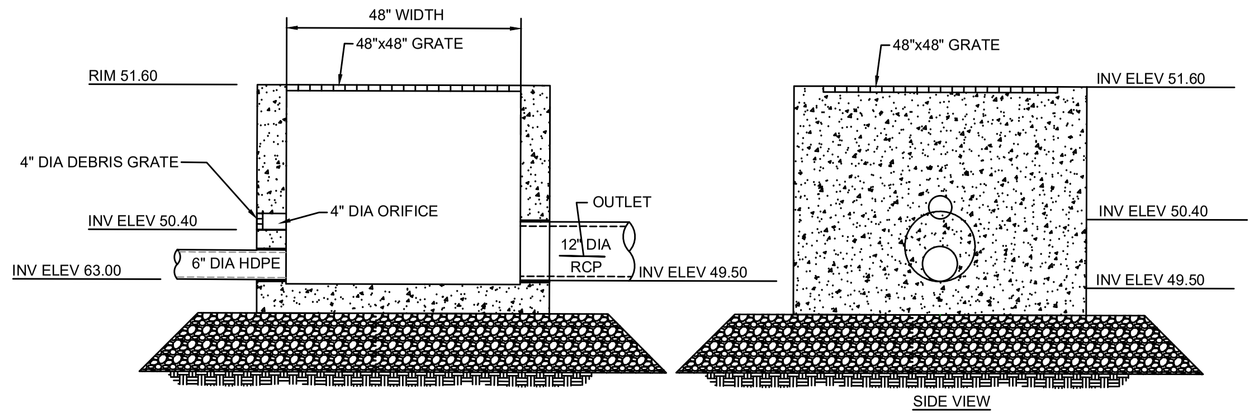

NOTES:
1. STRUCTURE SHALL BE 48"x48" (INNER DIMENSIONS) PRECAST CONCRETE BOX STRUCTURE
2. ALL SECTIONS SHALL BE DESIGNED FOR HS-20 LOADING.
3. PROVIDE "V" KNOCKOUTS FOR PIPES WITH 2" MAX CLEARANCE TO OUTSIDE OF PIPE. MORTAR ALL PIPE CONNECTIONS.
4. JOINT SEALANT BETWEEN PRECAST SECTIONS SHALL BE PREFORMED BUTYL RUBBER.

OUTLET CONTROL STRUCTUE 5 (OCS 5) DETAIL
N.T.S.

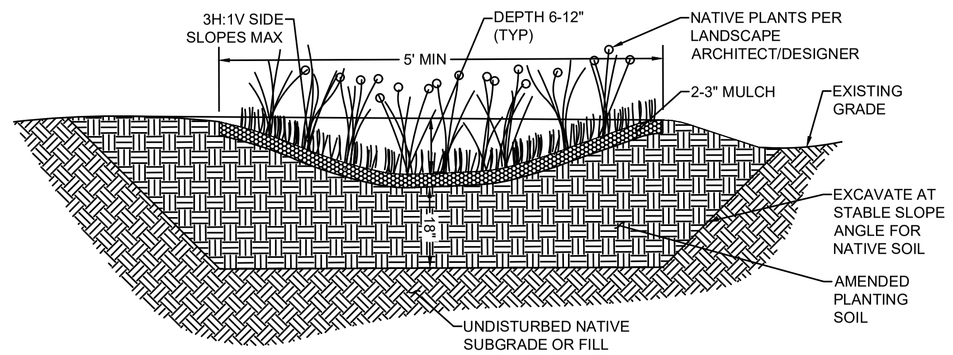

DRAINAGE SWALE DETAIL
N.T.S.

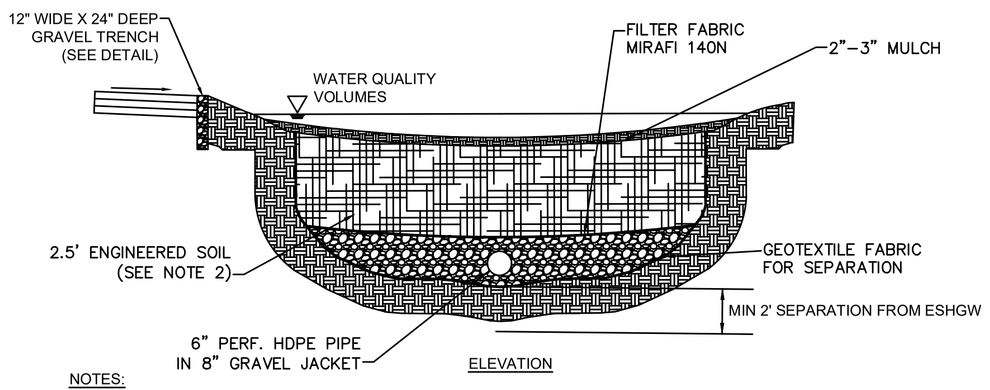

NOTES:

1. UNDERDRAIN PIPING SHOULD BE SET IN 1 TO 2-INCH DIAMETER STONE OR GRAVEL WASHED FREE OF FINES AND ORGANIC MATERIAL.

2. ENGINEERED SOIL SHALL CONSIST OF 40% SAND, 20-30% TOPSOIL AND 30-40% COMPOST, IN ACCORDANCE WITH THE SPECIFICATIONS IN THE MASSDEP STORMWATER HANDBOOK.

BIORETENTION BASIN LAYOUT
N.T.S.

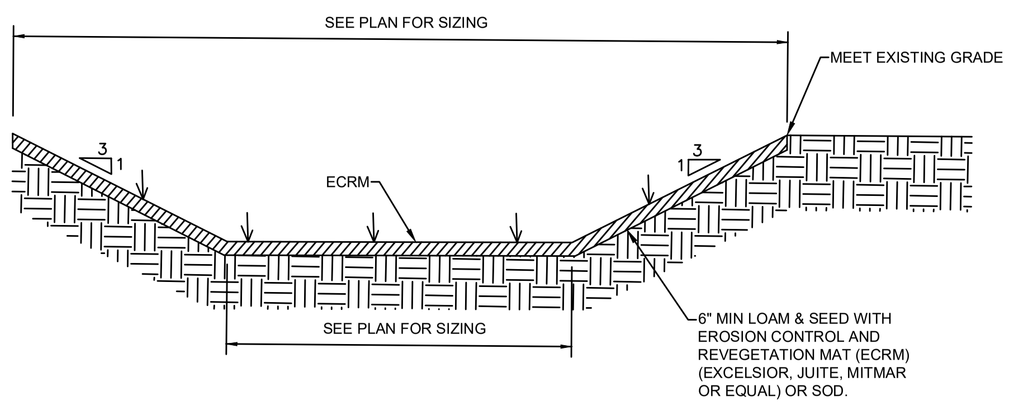

SEDIMENT FOREBAY TYPICAL CROSS SECTION
N.T.S.

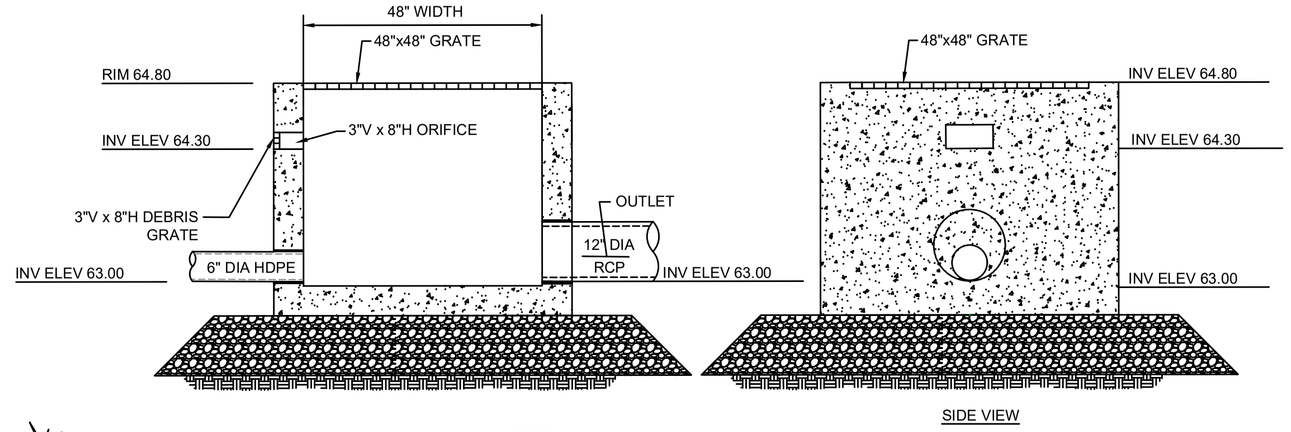

NOTES:
1. STRUCTURE SHALL BE 48"x48" (INNER DIMENSIONS) PRECAST CONCRETE BOX STRUCTURE
2. ALL SECTIONS SHALL BE DESIGNED FOR HS-20 LOADING.
3. PROVIDE "V" KNOCKOUTS FOR PIPES WITH 2" MAX CLEARANCE TO OUTSIDE OF PIPE. MORTAR ALL PIPE CONNECTIONS.
4. JOINT SEALANT BETWEEN PRECAST SECTIONS SHALL BE PREFORMED BUTYL RUBBER.

OUTLET CONTROL STRUCTURE 14 (OCS 14) DETAIL
N.T.S.

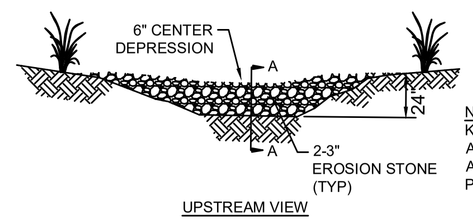

UPSTREAM VIEW

NOTE:
KEY STONE INTO CHANNEL BANKS AND EXTEND IT BEYOND THE ABUTMENTS A MINIMUM OF 18" TO PREVENT FLOW AROUND THE DAM.

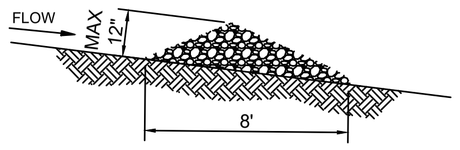

SECTION A-A

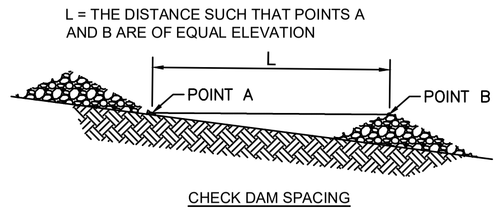

CHECK DAM SPACING

STONE CHECK DAM
N.T.S.

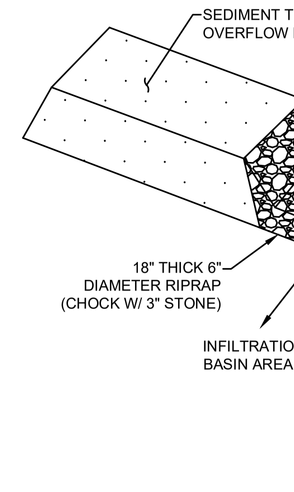

PLACE TUBE ALONG CONTOURS AND PERPENDICULAR TO FLOW.

PLACE AS CLOSE TO LIMIT OF SOIL DISTURBANCE AS POSSIBLE

ADJUST LOCATION AS REQUIRED FOR OPTIMUM EFFECTIVENESS. DO NOT INSTALL IN WATERWAYS.

PLACE STAKES AS NEEDED TO SECURE TUBES IN PLACE.

PLAN VIEW

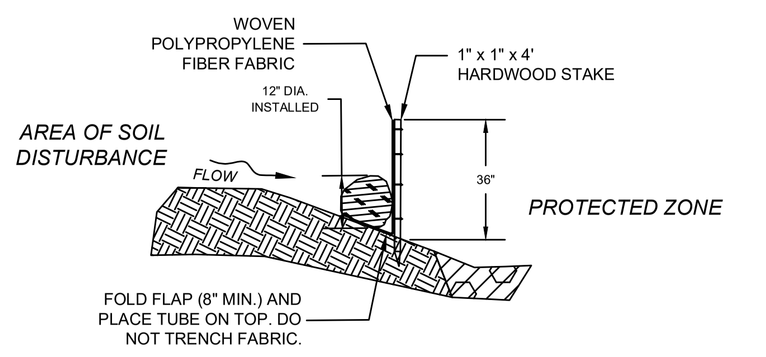

SECTION

COMPOST FILTER TUBE & SILT FENCE
N.T.S.

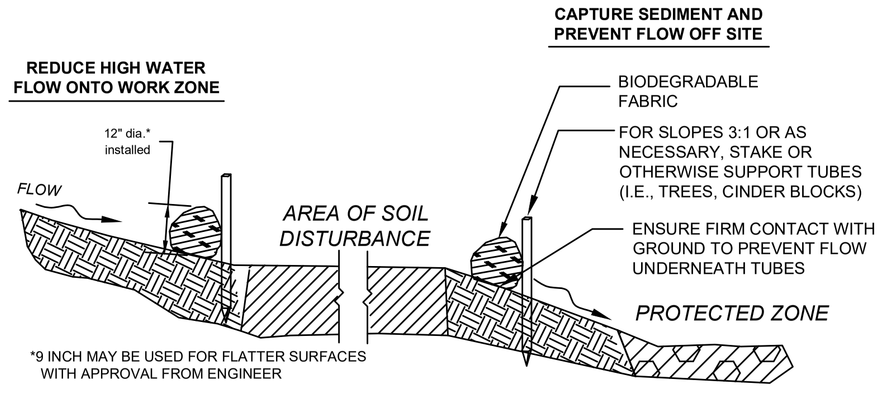

SECTION

SEDIMENT CONTROL BARRIER
N.T.S.

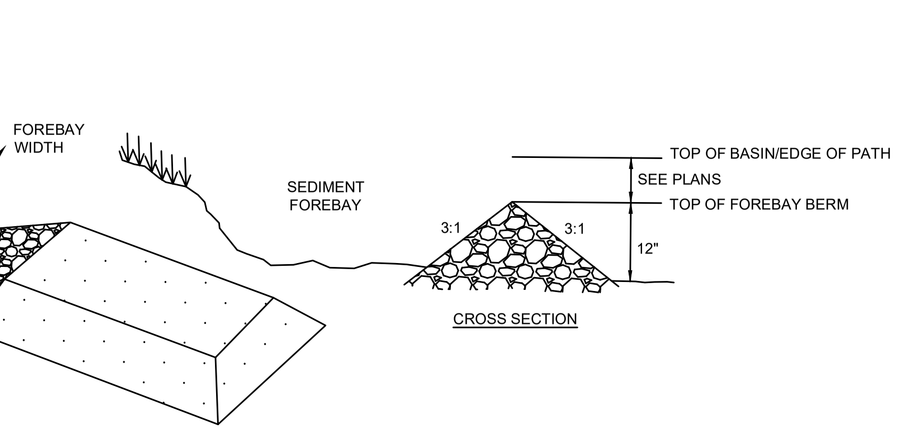

SEDIMENT FOREBAY OUTLET DETAIL
N.T.S.

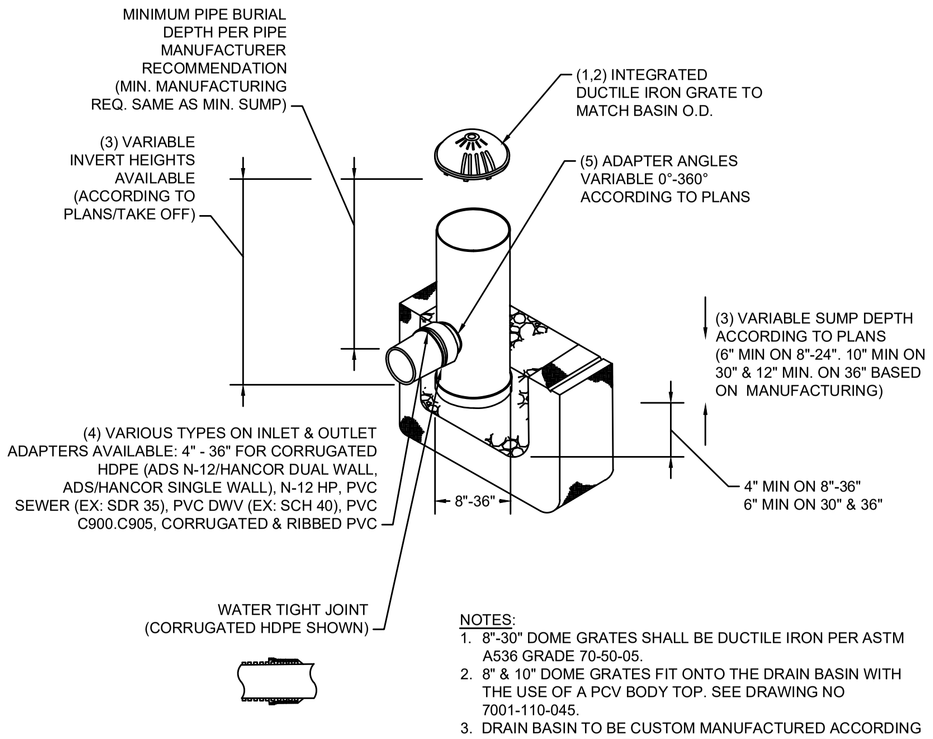

NOTES:
1. 8"-30" DOME GRATES SHALL BE DUCTILE IRON PER ASTM A536 GRADE 70-50-05.
2. 8" & 10" DOME GRATES FIT ONTO THE DRAIN BASIN WITH THE USE OF A PCV BODY TOP. SEE DRAWING NO 7001-110-045.
3. DRAIN BASIN TO BE CUSTOM MANUFACTURED ACCORDING TO PLAN DETAILS. RISERS ARE NEEDED FOR BASINS OVER 84" DUE TO SHIPPING RESTRICTIONS. SEE DRAWING NO. 7001-110-065.
4. DRAINAGE CONNECTION STUB JOIN TIGHTNESS SHALL CONFORM TO ASTM D3212 FOR CORRUGATED HDPE (ADS M-12/HANCOR DUAL WALL), N-12 HP, & PVC SEWER (4"-36")
5. ADAPTERS CAN BE MOUNTED ON ANY ANGLE 0° TO 360°. TO DETERMINE MINIMUM ANGLE BETWEEN ADAPTERS SEE DRAWING NO. 7001-110-012.
6. 8"-30" DOME GRATES HAVE NO LOAD RATING.

"BEEHIVE" DRAIN (OCS 10) DETAIL
N.T.S.

LAWRENCE
LMRC RAIL TRAIL

STATE	FED. AID PROJ. NO.	SHEET NO.	TOTAL SHEETS
MA	-	125	225
PROJECT FILE NO.	608930		

CONSTRUCTION DETAILS - 2 OF 5

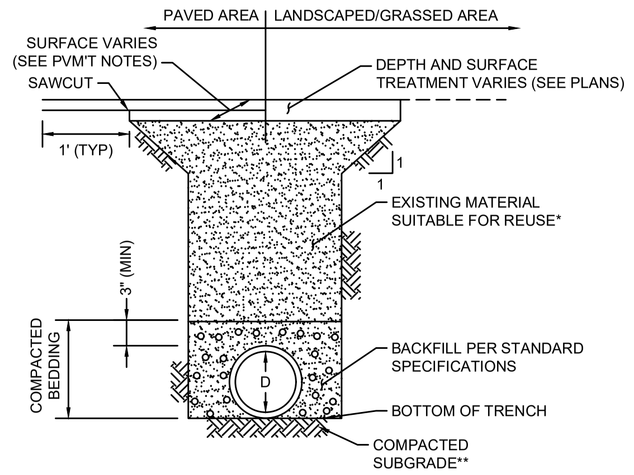

NOTES:

* EXISTING MATERIAL OBTAINED FROM EXCAVATION THAT IS DETERMINED TO BE SUITABLE, AND APPROVED BY THE ENGINEER SHALL BE USED. BACKFILL SHALL BE PLACED IN LAYERS NO MORE THAN 6" IN DEPTH AND THOROUGHLY COMPACTED. BACKFILLING TO A POINT 2' OVER THE PIPE SHALL CONTAIN NO STONES LARGER THAN 3".

**SOFT OR UNSUITABLE MATERIAL EXISTING BELOW THE REQUIRED BEDDING GRADE SHALL BE REMOVED AS DIRECTED AND REPLACED WITH SAND, GRAVEL, CRUSHED STONE OR OTHER SUITABLE MATERIAL AND THOROUGHLY COMPACTED.

UTILITY TRENCH

N.T.S.

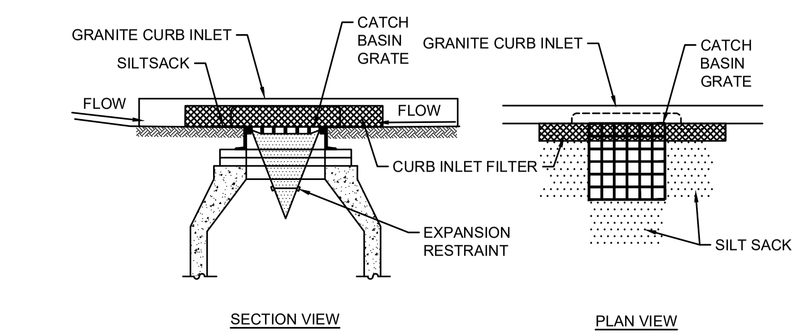

NOTES:

1. INSTALL SILT SACK IN EXISTING CATCH BASINS BEFORE COMMENCING WORK, AND IN NEW CATCH BASINS IMMEDIATELY AFTER INSTALLATION OF STRUCTURE. MAINTAIN UNTIL BINDER COURSE PAVING IS COMPLETE OR A PERMANENT STAND OF GRASS HAS BEEN ESTABLISHED.
2. GRATE TO BE PLACED OVER SILT SACK.
3. SILT SACK SHALL BE INSPECTED PERIODICALLY AND AFTER ALL STORM EVENTS AND CLEANING OR REPLACEMENT SHALL BE PERFORMED PROMPTLY AS NEEDED.

INLET PROTECTION SILT SACK IN CATCH BASIN WITH CURB INLET

N.T.S.

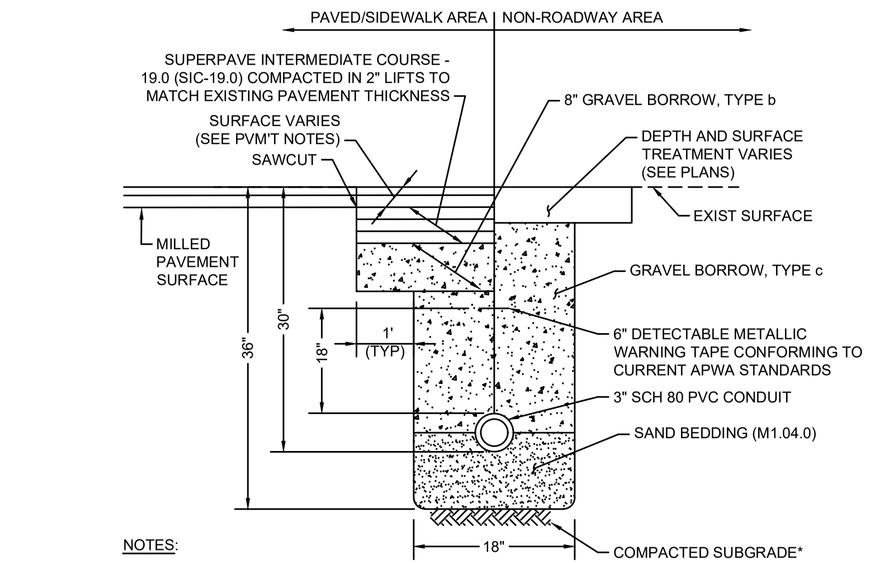

NOTES:

* SOFT OR UNSUITABLE MATERIAL EXISTING BELOW THE REQUIRED BEDDING GRADE SHALL BE REMOVED AS DIRECTED AND REPLACED WITH SAND, GRAVEL, CRUSHED STONE OR OTHER SUITABLE MATERIAL AND THOROUGHLY COMPACTED.

CONDUIT TRENCH

N.T.S.

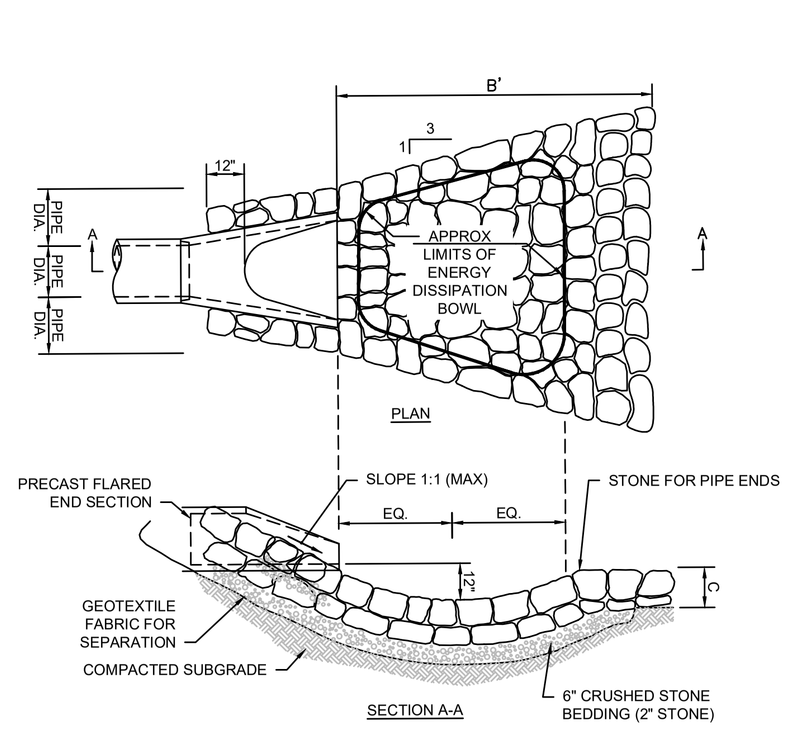

NOTE:
SEE PLANS FOR STONE LENGTH AND DEPTH

STONE AT FLARED END SECTION

N.T.S.

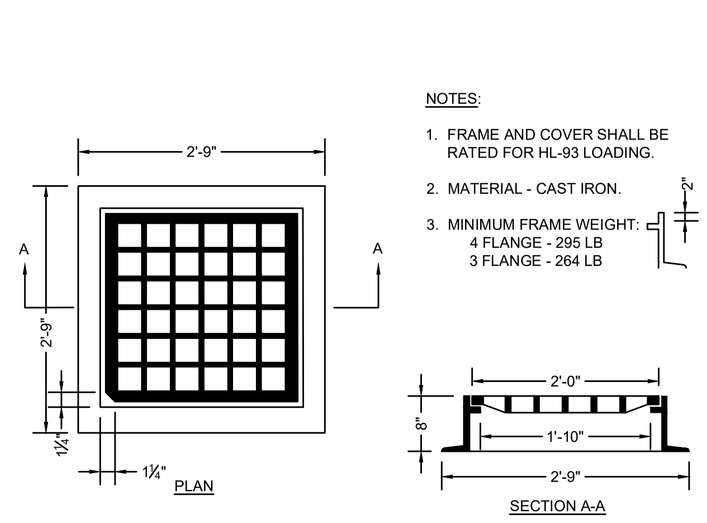

NOTES:

1. FRAME AND COVER SHALL BE RATED FOR HL-93 LOADING.
2. MATERIAL - CAST IRON.
3. MINIMUM FRAME WEIGHT:
   4 FLANGE - 295 LB
   3 FLANGE - 264 LB

CATCH BASIN FRAME & GRATE (MUNICIPAL STANDARD)

N.T.S.

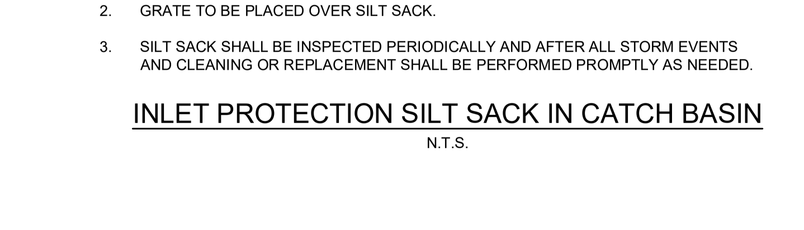

NOTES:

1. INSTALL SILT SACK IN EXISTING CATCH BASINS BEFORE COMMENCING WORK, AND IN NEW CATCH BASINS IMMEDIATELY AFTER INSTALLATION OF STRUCTURE. MAINTAIN UNTIL BINDER COURSE PAVING IS COMPLETE OR A PERMANENT STAND OF GRASS HAS BEEN ESTABLISHED.
2. GRATE TO BE PLACED OVER SILT SACK.
3. SILT SACK SHALL BE INSPECTED PERIODICALLY AND AFTER ALL STORM EVENTS AND CLEANING OR REPLACEMENT SHALL BE PERFORMED PROMPTLY AS NEEDED.

INLET PROTECTION SILT SACK IN CATCH BASIN

N.T.S.

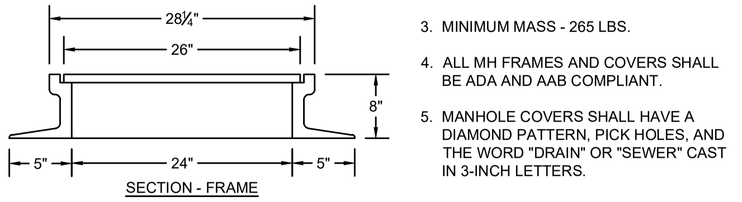

NOTES:

1. FRAME AND COVER SHALL BE RATED FOR HL-93 LOADING.
2. MATERIAL - CAST IRON.
3. MINIMUM MASS - 265 LBS.
4. ALL MH FRAMES AND COVERS SHALL BE ADA AND AAB COMPLIANT.
5. MANHOLE COVERS SHALL HAVE A DIAMOND PATTERN, PICK HOLES, AND THE WORD "DRAIN" OR "SEWER" CAST IN 3-INCH LETTERS.

MANHOLE FRAME & COVER

N.T.S.

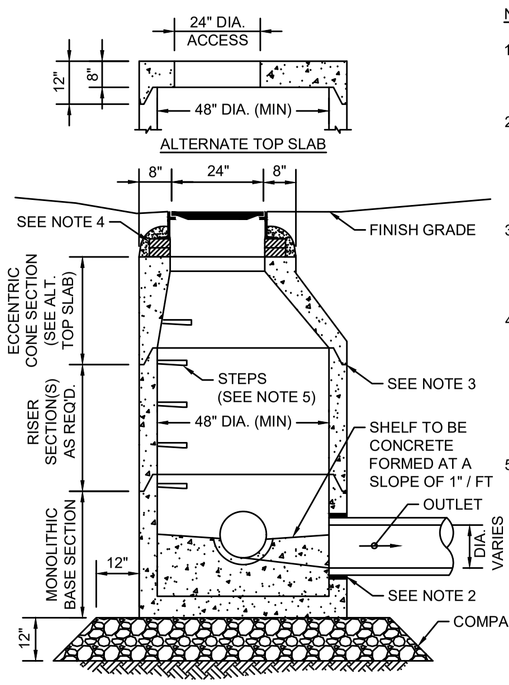

NOTES:

1. ALL SECTIONS SHALL BE DESIGNED FOR HL-93 LOADING.
2. PROVIDE "V" KNOCKOUTS FOR PIPES WITH 2" MAX CLEARANCE TO OUTSIDE OF PIPE. MORTAR ALL PIPE CONNECTIONS.
3. JOINT SEALANT BETWEEN PRECAST SECTIONS SHALL BE PREFORMED BUTYL RUBBER.
4. DRAIN MANHOLE FRAME AND COVER SHALL BE SET IN FULL MORTAR BED. ADJUST TO GRADE WITH CLAY BRICK AND MORTAR. (2 COURSES TYP 5 COURSES MAX)
5. COPOLYMER MANHOLE STEPS SHALL BE INSTALLED AT 12" O.C. FOR THE FULL DEPTH OF THE STRUCTURE.

DRAIN MANHOLE

N.T.S.

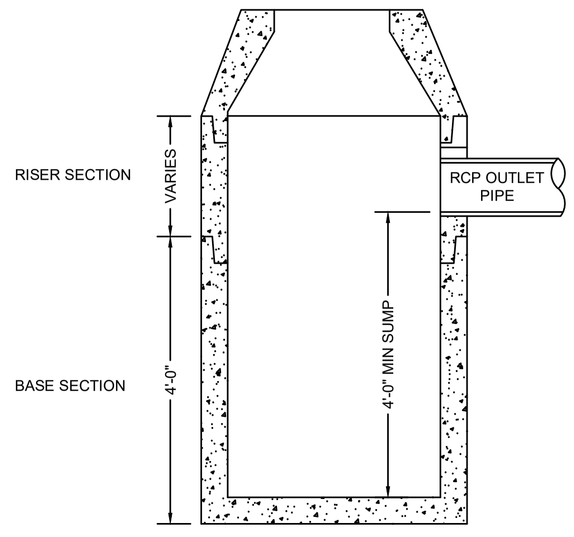

NOTE:

ALL CATCH BASINS SHALL CONFORM TO MASSDOT CONSTRUCTION STANDARD E 201.4.0 EXCEPT FOR 4' SUMP DEPTH AS SHOWN

DEEP SUMP CATCH BASIN

N.T.S.

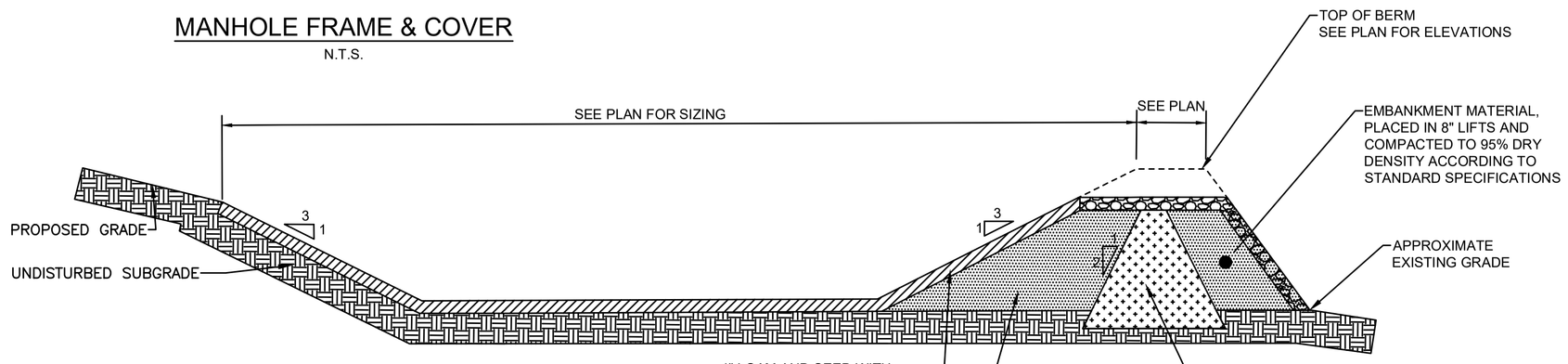

BERM MATERIALS (SEE SPECIAL NOTE BELOW)

1) IMPERVIOUS CORE (CLAY SILT & SAND SHALL CONFORM TO AASHTO T27 HAVING A COEFFICIENT OF PERMEABILITY OF 1 X 10 CM/SEC AND MEET THE GRADATION AS FOLLOWS: ROLLED TO 6 LAYERS (95% COMPACTION)

PERCENT FINER	SIEVE SIZE
100	#4
30 TO 85	#40
20 TO 50	#200

2) FILTER LAYER F2
EMBANKMENT MATERIAL SHALL CONFORM TO AASHTO M57 AND MEET THE FOLLOWING GRADATION:

PERCENT FINER	SIEVE SIZE
100	3 IN.
95-100	2 IN.
55-85	1 IN.
27-52	#4
50 MAX	#40
25 MAX	#200

*** SPECIAL NOTE ***
SPECIAL MATERIALS 1, 2 AND ANTI-SEEP COLLARS CAN BE ELIMINATED AND REPLACED WITH GENERAL MATERIALS IN AREAS OF OVERALL EMBANKMENT CUT AND IN AREAS WHERE THE GEOTECHNICAL & CITY ENGINEERS DETERMINE THAT FIELD CONDITIONS DO NOT WARRANT THESE ITEMS.

INFILTRATION BASIN

N.T.S.

STATE	FED. AID PROJ. NO.	SHEET NO.	TOTAL SHEETS
MA	-	126	225
PROJECT FILE NO.	608930		

CONSTRUCTION DETAILS - 3 OF 5

608930_HD10(CONSTRUCTION DETAILS).DWG Plotted on 15-Aug-2023 11:37 AM

Proposal No. 608930-128034

A00860 - 69

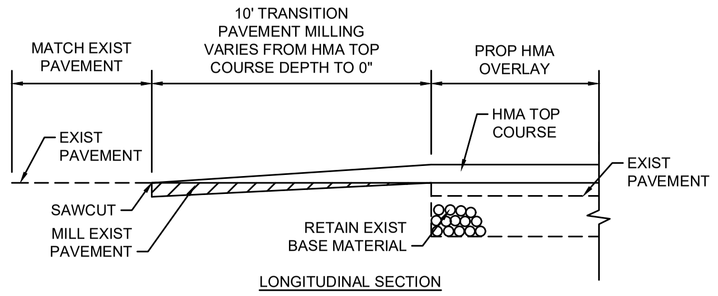

HMA OVERLAY TRANSITION
N.T.S.

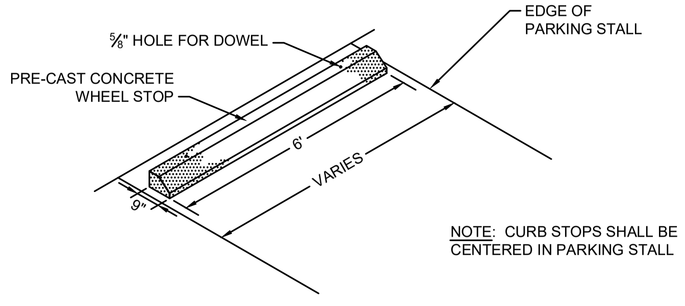

CONCRETE WHEEL STOP
N.T.S.

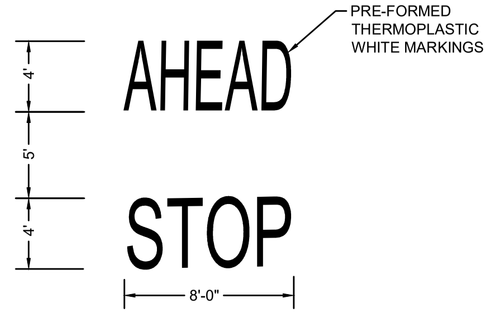

STOP AHEAD PAVEMENT MARKING
N.T.S.

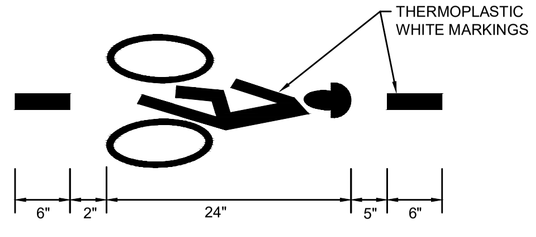

BICYCLE DETECTOR PAVEMENT MARKING
N.T.S.

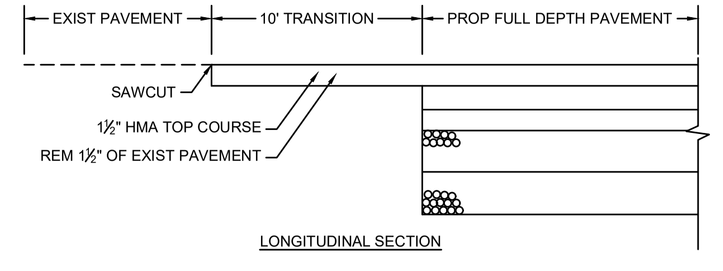

FULL DEPTH PAVEMENT TRANSITION
N.T.S.

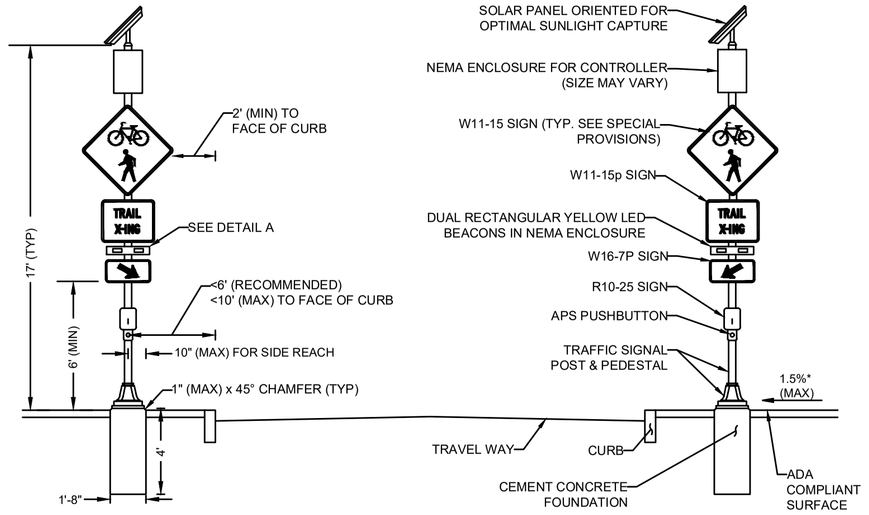

NOTES:
1. CROSSWALK AND ADA-COMPLIANT RAMPS NOT SHOWN. SEE PLANS FOR LOCATIONS.
2. REFER TO THE SPECIAL PROVISIONS FOR SIGN DIMENSIONS.
3. ACCESS TO ALL PEDESTRIAN ACTUATED CONTROLS SHALL BE ADA/AAB COMPLIANT
4. *0.5% CONSTRUCTION TOLERANCE FOR CROSS-SLOPE

MAJOR ITEMS LIST
2 CEMENT CONCRETE FOUNDATIONS PER 812.30.1
2 17' TRAFFIC SIGNAL POSTS & PEDESTALS
2 APS PUSHBUTTON SYSTEMS
2 DUAL RECTANGULAR YELLOW LED BEACONS IN NEMA ENCLOSURES
2 R10-25 SIGNS
4 W11-15 SIGNS
4 W11-15p SIGNS
2 W16-7pL SIGNS
2 W16-7pR SIGNS
2 SOLAR PANEL SYSTEMS
2 NEMA ENCLOSURES FOR ALL COMPONENTS NEEDED TO MEET FUNCTIONAL REQUIREMENTS PER SPECIAL PROVISIONS
2 BATTERY SYSTEMS

PLUS ALL MOUNTING AND SUPPORTING HARDWARE AND WIRING NECESSARY TO COMPLETE A WORKING SYSTEM.

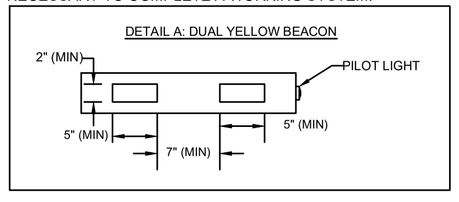

RECTANGULAR RAPID FLASHING BEACON (RRFB)
N.T.S.

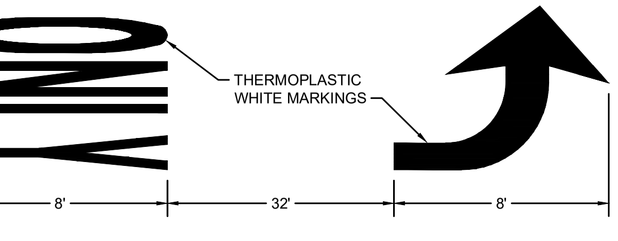

NOTE: SPACING SHALL BE SAME FOR RIGHT TURN LANE AND THRU ONLY PAVEMENT MARKING (REFER TO MASSDOT STANDARD DRAWING TR.6.1)

LEFT TURN LANE PAVEMENT MARKING
N.T.S.

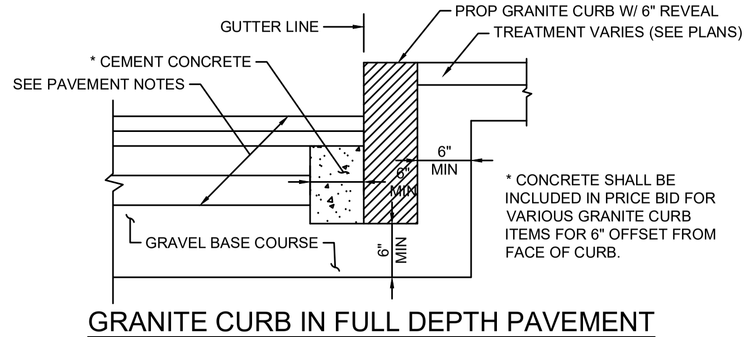

GRANITE CURB IN FULL DEPTH PAVEMENT
N.T.S.

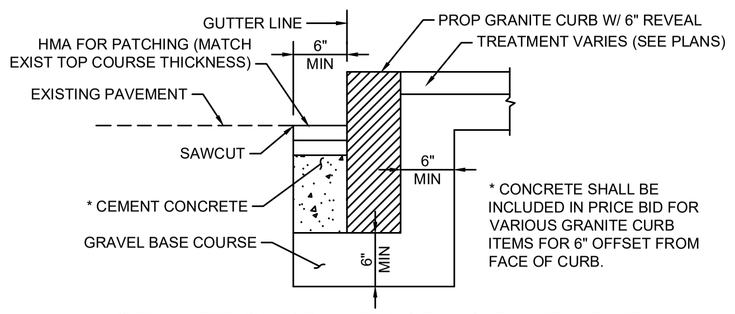

GRANITE CURB IN EXISTING PAVEMENT
N.T.S.

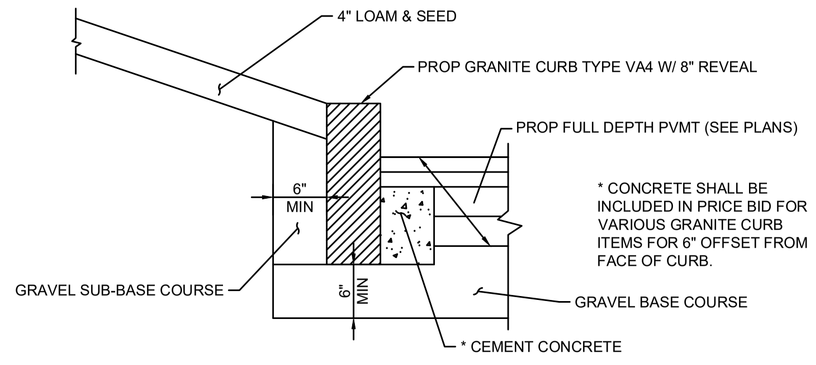

GRANITE BACK CURB
N.T.S.

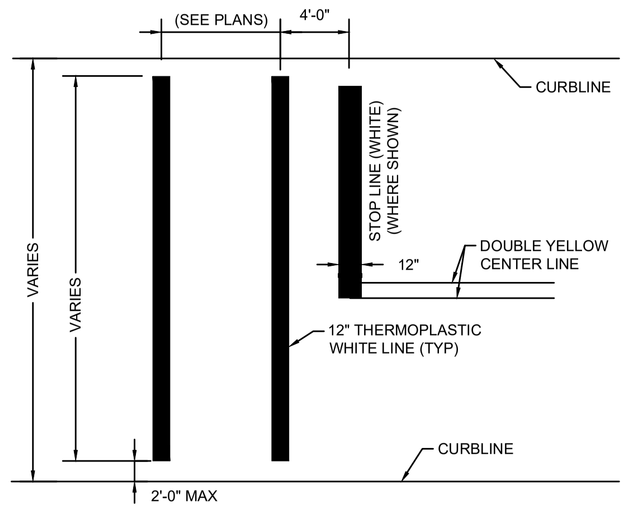

NOTES:
1. ALL 12" LINES SHALL BE APPLIED IN ONE APPLICATION, NO COMBINATION OF LINES (TWO - 6" LINES) WILL BE ACCEPTED.
2. LAYOUT OF CROSSWALKS SHALL BE APPROVED BY THE ENGINEER PRIOR TO APPLICATION.

CROSSWALK PAVEMENT MARKING (SIGNALIZED APPROACH)
N.T.S.

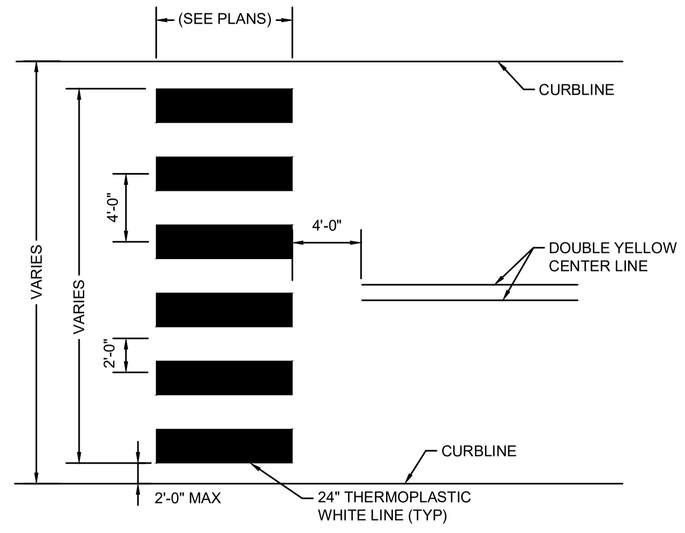

NOTES:
1. ALL 12" LINES SHALL BE APPLIED IN ONE APPLICATION, NO COMBINATION OF LINES (TWO - 6" LINES) WILL BE ACCEPTED. ALL 24" LINES MAY BE EITHER ONE 24" LINE OR A COMBINATION OF TWO - 12" LINES.
2. LAYOUT OF CROSSWALKS SHALL BE APPROVED BY THE ENGINEER PRIOR TO APPLICATION.
3. CROSSWALK BARS SHALL BE PLACED OUTSIDE THE VEHICULAR WHEEL PATH WHEREVER POSSIBLE.

CROSSWALK PAVEMENT MARKING (LADDER); UNSIGNALIZED APPROACH
N.T.S.

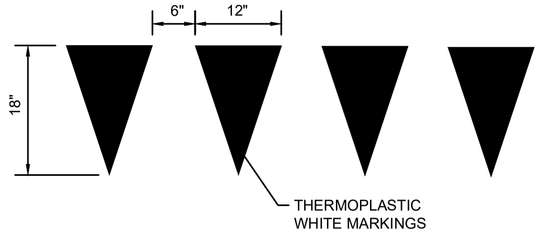

YIELD LINE PAVEMENT MARKING
N.T.S.

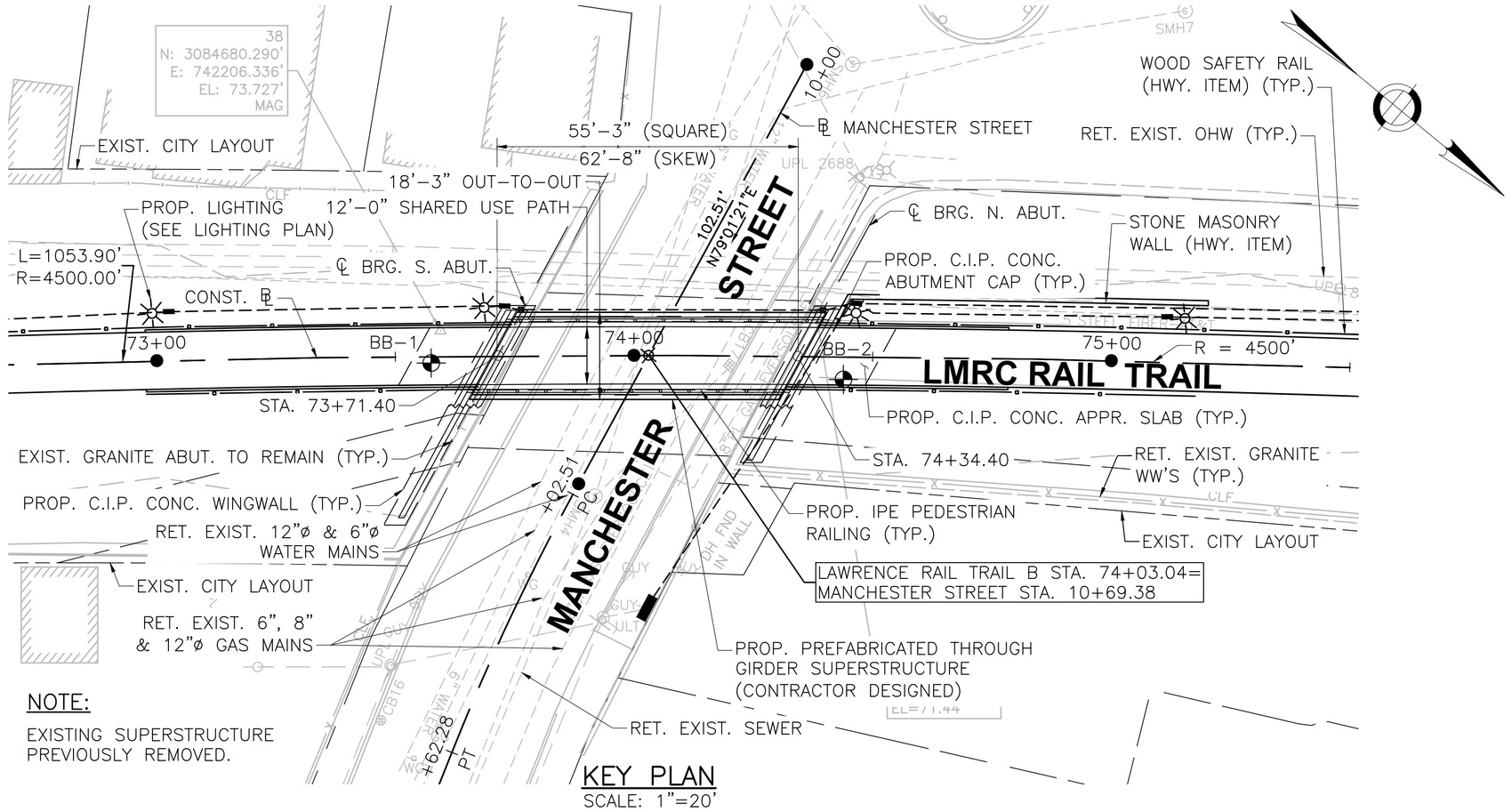

KEY PLAN
SCALE: 1"=20'

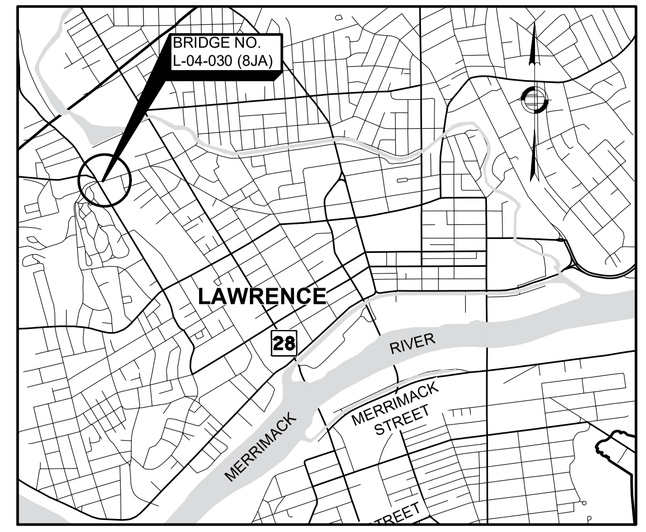

LOCUS MAP
SCALE: 1"=2000'

LAWRENCE
LMRC RAIL TRAIL OVER MANCHESTER STREET

STATE	FED. AID PROJ. NO.	SHEET NO.	TOTAL SHEETS
MA	-	131	225
PROJECT FILE NO.	608930		

KEY PLAN, PROFILES, LOCUS AND INDEX

INDEX OF SHEETS

SHEET NO.	DESCRIPTION
1	KEY PLAN, PROFILES, LOCUS AND INDEX
2	GENERAL NOTES
3	BORING LOGS
4	DEMOLITION DETAILS
5	PLAN AND ELEVATION
6	ABUTMENT PLAN AND ELEVATION
7	MISCELLANEOUS DETAILS

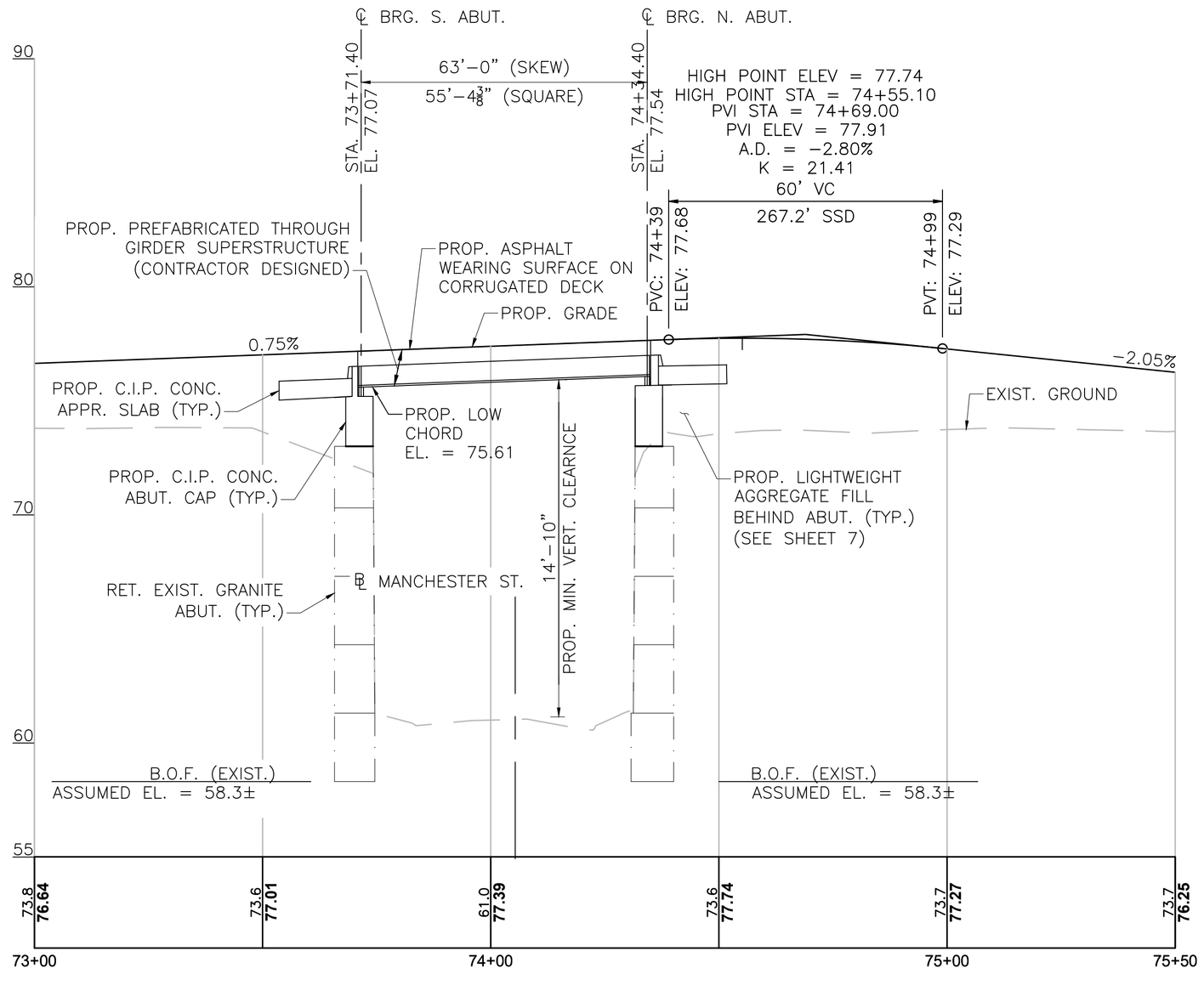

NOTE:
EXISTING SUPERSTRUCTURE PREVIOUSLY REMOVED.

LMRC RAIL TRAIL PROFILE
HORIZONTAL SCALE: 1" = 20'-0"
VERTICAL SCALE" 1" = 4'-0"

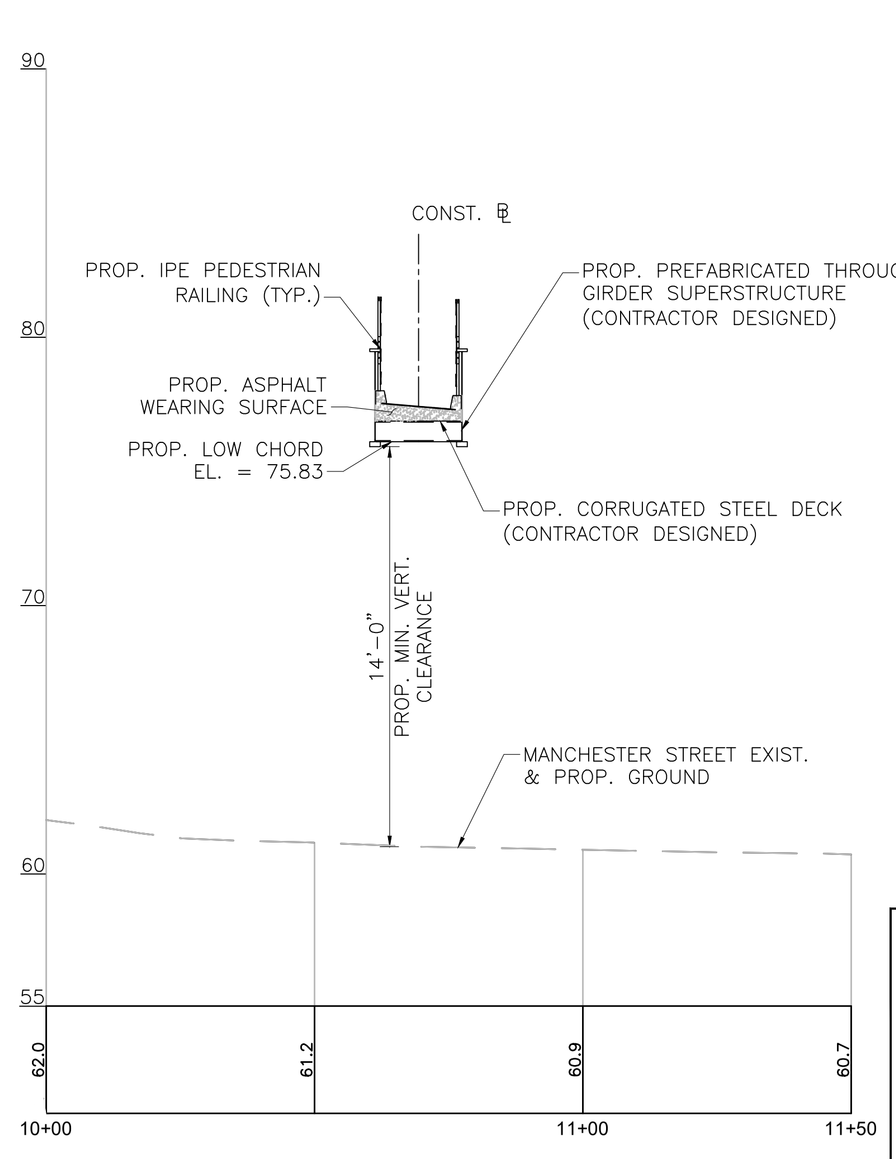

NOTE:
EXISTING SUPERSTRUCTURE PREVIOUSLY REMOVED.

MANCHESTER STREET PROFILE
HORIZONTAL SCALE: 1" = 20'-0"
VERTICAL SCALE" 1" = 4'-0"

TEC
The Engineering Corp
282 Merrimack Street, Second Floor
Lawrence, MA 01843
978-794-1792

10/28/2022	FIRST STRUCTURAL SUBMITTAL

massDOT Massachusetts Department of Transportation Highway Division

SUPERSTRUCTURE REPLACEMENT
LAWRENCE
LMRC RAIL TRAIL
OVER MANCHESTER STREET
MASSACHUSETTS DEPARTMENT OF TRANSPORTATION
HIGHWAY DIVISION
10 PARK PLAZA BOSTON, MASS

STATE BRIDGE ENGINEER | CHIEF ENGINEER

608930_BR1(L04030).DWG Plotted on 28-Oct-2022 1:12 PM
Proposal No. 608930-128034
October 28, 2022
First Structural Submittal (S1)
A00860 - 70

LAWRENCE
LMRC RAIL TRAIL OVER MANCHESTER STREET

STATE	FED. AID PROJ. NO.	SHEET NO.	TOTAL SHEETS
MA	-	132	225
PROJECT FILE NO.	608930		

GENERAL NOTES

DESIGN:

IN ACCORDANCE WITH THE 2020 AMERICAN ASSOCIATION OF STATE HIGHWAY AND TRANSPORTATION OFFICIALS (AASHTO) LRFD BRIDGE DESIGN SPECIFICATIONS, 9TH EDITION WITH CURRENT INTERIM SPECIFICATIONS THROUGH 2021, AND THE 2009 AASHTO LRFD GUIDE SPECIFICATIONS FOR THE DESIGN OF PEDESTRIAN BRIDGES WITH INTERIM SPECIFICATIONS THROUGH 2015 FOR PEDESTRIAN LOADING OF 90 PSF AND H10 LOADING.

BENCHMARKS:

RIVET IN WALL
EL: 71.44'
N: 3084737.4728
E: 742152.4000

ELEVATIONS ARE BASED ON THE NORTH AMERICAN VERTICAL DATUM (NAVD) OF 1988.

SURVEY

THE CONTRACTOR SHALL CONDUCT HIS/HER OWN SURVEY TO REESTABLISH THE CENTERLINE OF CONSTRUCTION PRIOR TO ANY CONSTRUCTION ACTIVITIES. THE CONTRACTOR SHALL VERIFY ALL DIMENSIONS REQUIRED FOR THE PROPER PERFORMANCE OF HIS/HER WORK. FIELD CONDITIONS MAY EXIST THAT DEVIATE FROM THE TYPICAL AND THEORETICAL DIMENSIONS SHOWN ON THE PLANS. THE CONTRACTOR SHALL BE SOLELY RESPONSIBLE FOR THE FABRICATION AND FIT OF HIS/HER WORK.

SCALES:

SCALES NOTED ON THE PLANS ARE NOT APPLICABLE TO REDUCED SIZE PRINTS. DIVIDE SCALES BY 2 FOR HALF-SIZE PRINTS (A3).

FOUNDATIONS:

1. FOUNDATIONS MAY BE ALTERED, IF NECESSARY, TO SUIT CONDITIONS ENCOUNTERED DURING CONSTRUCTION, WITH APPROVAL OF THE ENGINEER.
2. REFER TO TO GEOTECHNICAL ENGINEERING REPORT DATED NOVEMBER 19, 2021 BY TRC INC.
3. SEE ADDITIONAL FOUNDATION NOTES, REFER TO SHEET 6.

UNSUITABLE MATERIAL:

ALL UNSUITABLE MATERIAL SHALL BE REMOVED WITHIN THE LIMITS OF THE FOUNDATIONS OF THE STRUCTURE, AS DIRECTED BY THE ENGINEER.

ANCHOR BOLTS:

ALL ANCHOR BOLTS SHALL BE SET BY TEMPLATE BEFORE THE CONCRETE IS PLACED.

CONCRETE:

1. ALL EXPOSED EDGE CORNERS SHALL BE FINISHED WITH A ¾" CHAMFER UNLESS OTHERWISE NOTED OR DIRECTED.
2. THE CONTRACTOR SHALL BE RESPONSIBLE FOR PREVENTING CONCRETE STAINS AND DISCOLORATION DURING CONSTRUCTION UNTIL SUCH TIME AS THE SURFACES ARE APPROVED AND ACCEPTED. ANY CONCRETE STAINS AND DISCOLORATION OCCURRING PRIOR TO ACCEPTANCE OF SURFACES SHALL BE REMOVED BY THE CONTRACTOR AT ITS OWN EXPENSE USING AN APPROVED PROCEDURE.
3. CONCRETE SHALL BE AS FOLLOWS, UNLESS OTHERWISE NOTED:

   4000 PSI, 1.5 INCH, 565 CEMENT CONCRETE.....FOOTINGS, ABUTMENT STEMS AND APPROACH SLABS
   4000 PSI, 3/4 INCH, 610 CEMENT CONCRETE.....WINGWALL STEMS AND ABUTMENT BACKWALLS

STRUCTURAL STEEL:

ALL STRUCTURAL STEEL SHALL CONFORM TO THE REQUIREMENTS OF AASHTO M 270, GRADE 50. ALL STRUCTURAL STEEL BE GALVANIZED AND PAINTED.

REINFORCEMENT:

REINFORCING STEEL SHALL BE EPOXY COATED AND CONFORM TO THE REQUIREMENTS OF AASHTO M 31 GRADE 60. UNLESS OTHERWISE NOTED ON THE CONSTRUCTION DRAWINGS, ALL BARS SHALL BE LAPPED AS FOLLOWS:

MODIFICATION CONDITION:	#4 BARS	#5 BARS
1. NONE	16"	19"
2. 12" OF CONCRETE BELOW BAR	20"	25"
3. EPOXY COATED BARS, COVER < 3db, OR CLEAR SPACING < 6db	23"	29"
4. COATED BARS, ALL OTHER CASES	18"	23"
5. CONDITION 2. AND 3.	26"	32"
6. CONDITION 2. AND 4.	24"	30"

ALL OTHER BARS SHALL BE LAPPED AS SHOWN ON THE CONSTRUCTION DRAWINGS.

UTILITIES:

ALL EXISTING UTILITIES SHALL BE LOCATED AND PROTECTED BY THE CONTRACTOR. THE CONTRACTOR IS RESPONSIBLE FOR COORDINATING WITH UTILITY OWNERS.

ESTIMATED QUANTITIES (NOT GUARANTEED)		
ITEM DESCRIPTION	QUANTITY	UNITS
BRIDGE EXCAVATION	20	CY
CRUSHED STONE FOR BRIDGE FOUNDATIONS	3	TON
4 INCH SLOT-PERFORATED CORRUGATED PLASTIC PIPE (SUBDRAIN)	40	FT
LIGHTWEIGHT AGGREGATE FILL	150	CY
BRIDGE STRUCTURE BRIDGE NO. L-04-030 (8JA)	1	LS

TRAFFIC DATA		
	ROADWAY OVER	ROADWAY UNDER
DESIGN YEAR	N/A	N/A
AVERAGE DAILY TRAFFIC - PRESENT	N/A	6128
AVERAGE DAILY TRAFFIC - DESIGN YEAR	N/A	N/A
DESIGN HOURLY VOLUME	N/A	558
DIRECTIONAL DISTRIBUTION	N/A	53%
TRUCK PERCENTAGE - AVERAGE DAY	N/A	N/A
TRUCK PERCENTAGE - PEAK HOUR	N/A	N/A
DESIGN SPEED	N/A	25 MPH
DIRECTIONAL DESIGN HOURLY VOLUME	N/A	N/A

SEISMIC DESIGN CRITERIA	
DESIGN RETURN PERIOD:	1000
DESIGN SPECTRA	
As	0.142
SDs	0.279
SD1	0.102
SITE CLASS	D
SEISMIC DESIGN CATEGORY (SDC)	A

10/28/2022	FIRST STRUCTURAL SUBMITTAL
DATE	DESCRIPTION
THIS SHEET IS APPROVED FOR CONSTRUCTION BY MASSDOT AUTHORIZED SIGNATORY:	STATE BRIDGE ENGINEER
USE ONLY PRINTS OF LATEST DATE	

608930_BR2-3(L04030).DWG Plotted on 28-Oct-2022 1:13 PM
Proposal No. 608930-128034
October 28, 2022
First Structural Submittal (S1)
A00860 - 71

BORING BB–1

MassDOT	TRC Environmental Corporation 650 Suffolk Street Lowell, MA 01854	Phone: (978) 970-5600 Fax: (978) 453-1995 E Mail: gmischel@trcsolutions.com	**Boring No.** BB-1 Scale 1" = 5'

City/Town: Lawrence	Bridge: L-04-030 (8JA)	Project File No: 608930	Contract No:
Project: RR BMRR over HWY, Manchester St.		Date & Time Started: 7-10-17 1145	Total Hours: 2
Groundwater Depth: 17'		Date & Time Completed: 7-10-17 1340	
Coordinates: N 3084683.1	E 742212.8	Driller: Geosearch, Inc.	Driller's Name: Joe Keenan and Josh Houde
Ground Elevation: 73.06'	Inspector's Name: Lauren Hopp	Inspector's Company: TRC Environmental, Corporation	

Sample Number	Depth Range (Feet)	Blow Counts per 6 Inches Coring Times Minute Per Foot	Recovery Inches	Field Description	Strata Changes
				0 - 4": TOPSOIL	4"
S-1	0-2'	WOH 4 5 4	14"	4 - 14": Dry, loose, light brown, FINE TO COARSE SAND, trace fine to medium gravel, trace silt (fill).	
S-2	5'-7'	WOH 2 2 2	16"	Dry, very loose, tan, FINE TO COARSE SAND, trace fine gravel, trace silt. Note: Top 3" contain ash, slag and glass (fill).	
S-3	10'-12'	1 1 2 12	14"	0-8", S-3a: Dry, very loose, tan, FINE TO COARSE SAND, trace fine gravel, trace silt, trace slag (fill). 8-14", S-3b: Moist, very loose, reddish brown, FINE SAND, trace silt and roots, trace gravel, (fill).	
S-4	12'-14'	4 4 4 4	12"	Moist, loose, reddish brown, FINE SAND, trace silt. Note: Top 3" contain slag and ash (fill).	
S-5	14'-16'	3 4 4 3	13"	Moist, loose, tan and black FINE SAND, trace silt, ash, roots, (fill).	
S-6	16'-18'	10 12 12 14	17.5"	Wet, medium dense, tan, FINE SAND, trace silt. Note: Top 4" contain fine sand mixed with ash and slag (fill).	18'
S-7	18'-20'	3 6 6 8	24"	Wet, medium dense, tan to light brown, FINE TO COARSE SAND, trace silt.	
S-8	20'-22'	2 2 2 3	12"	Wet, very loose, tan to light brown, FINE TO COARSE SAND, trace silt.	
S-9	25'-27'	12 21 23 24	15"	0-10", S-9a: Wet, dense, tan to light brown, FINE TO COARSE SAND, trace silt. 10-15", S-9a: Wet, dense, brown to gray FINE TO COARSE SAND, some fine to coarse gravel, some silt.	25.8'
S-10	30-32'	12 10 10 11	12"	Wet, medium dense, brown to gray, FINE TO COARSE SAND, some fine to coarse gravel, some silt.	32'
				Boring Terminated at 32'.	

EL. 75.0
EL. 70.0
EL. 60.0
EL. 50.0
EL. 40.0

EXIST. GROUND SURFACE
EL. = 73.06
EL. 71.80
PROP. BOT. OF
S. ABUT. CAP

BOT. OF EXIST. S. ABUT. FTG.
ASSUMED EL. = 58.3±
EL. 56.06 (OBSERVED 7/10/17)
EL. 55.06

EL. 47.26

EL. 41.06

Remarks:	Protective Device - Stand: Box:
Hollow-stem Auger with automatic hammer to drive SPT split spoons. Driller notes gravel and difficult drilling around 28 feet bgs.	Well Depth: Solid Pipe: Stick Up Pipe: Screen Pipe:

Penetration Resistance (N) Guide:				Type of Drill Rig: 55-LC
Cohesionless Soils (Sands, Gravels)		Cohesive Soils (Silts, Clays)		Arrow-Board: Signs: Cones:
Relative Density	Penetration Resistance	Consistency	Penetration Resistance	Hollow Stem Auger.
Very Loose	0 - 4	Very Soft	0 - 2	
Loose	4 - 10	Soft	2 - 4	
Medium Dense	10 - 30	Medium Stiff	4 - 8	
Dense	30 - 50	Stiff	8 - 15	
Very Dense	Over 50	Very Stiff	15 - 30	Sampler Type: SPT Size: 2' Automatic Hammer Weight: 140 lbs. Fall: 30"
N=Sum of Second and Third 6" Blow Counts		Hard	Over 30	
Terms Used for Second Entry of Descriptions: and = 40-50%, some = 10-40%, trace = 10% or less				Core Barrel Type: Size:

BORING BB–2

MassDOT	TRC Environmental Corporation 650 Suffolk Street Lowell, MA 01854	Phone: (978) 970-5600 Fax: (978) 453-1995 E Mail: gmischel@trcsolutions.com	**Boring No.** BB-2 Scale 1" = 5'

City/Town: Lawrence	Bridge: L-04-030 (8JA)	Project File No: 608930	Contract No:
Project: RR BMRR over HWY, Manchester St.		Date & Time Started: 7-7-17 0930	Total Hours: 2.25
Groundwater Depth: 17'		Date & Time Completed: 7-7-17 1140	
Coordinates: N 3084751.9	E 742160.5	Driller: Geosearch, Inc.	Driller's Name: Joe Keenan and Josh Houde
Ground Elevation: 73.71'	Inspector's Name: Lauren Hopp	Inspector's Company: TRC Environmental, Corporation	

Sample Number	Depth Range (Feet)	Blow Counts per 6 Inches Coring Times Minute Per Foot	Recovery Inches	Field Description	Strata Changes
				0 - 4": TOPSOIL	4"
S-1	0-2'	2 4 2 3	11"	4 - 11": Dry, loose, tan to light brown, FINE SAND, trace fine to medium gravel, trace silt (fill).	
S-2	5'-7'	3 3 2 2	11"	Moist, loose, tan to light brown, FINE SAND, trace fine to medium gravel, trace silt, trace ash. (fill).	
S-3	10'-12'	1 1 2 2	12"	Moist, very loose, tan and black, FINE SAND, trace silt. (fill)	
S-4	12'-14'	2 2 2 2	9.5"	Moist, very loose, tan and black, FINE SAND, trace silt, trace glass,(fill).	
S-5	14'-16'	1 WOH 1 WOH	13.5"	Moist, very loose, tan, FINE SAND, trace silt (fill).	
S-6	16'-18'	2 2 WOH WOH	10"	Moist to wet, very loose, tan, FINE SAND, some silt, (fill).	
S-7	18'-20'	WOH WOH 1 for 12"	24"	0-2", S-7a: Wet, very loose, tan, FINE SAND, trace silt, (fill). 2-24", S-7b: Wet, very soft, black, ORGANIC SILT.	18.2'
S-8	20'-22'	WOH	20"	0-20" S-8: Wet, very soft, dark black, ORGANIC SILT, trace sand.	
S-9	22'-24'	WOH	24"	0-24" S-9: Wet, very loose, black, FINE SAND and, ORGANIC SILT.	
S-10	24'-26'	6 7 8 7	24"	0-12" S-10a: Wet, Stiff, Black, ORGANIC SILT. 12-24", S-10b: Wet, medium dense, tan, FINE SAND, trace silt.	25'
S-11	30-32'	16 15 15 14	5"	Wet, dense, tan to light brown, FINE TO COARSE SAND, some gravel, some silt.	
S-12	32'-34'	16 15 30 20	20"	Wet, dense, FINE TO COARSE SAND AND FINE TO MEDIUM GRAVEL, some silt, trace clay.	34'
				Boring Terminated at 34'.	

EL. 75.0
EL. 70.0
EL. 60.0
EL. 50.0
EL. 40.0

EXIST. GROUND SURFACE
EL. = 73.71
EL. 71.77
PROP. BOT. OF
N. ABUT. CAP

BOT. OF EXIST. N. ABUT. FTG.
ASSUMED EL. = 58.3±
EL. 56.31 (OBSERVED 7/10/17)

EL. 48.71

EL. 39.71

Remarks:	Protective Device - Stand: Box:
Hollow-stem Auger with automatic hammer to drive SPT split spoons. Driller notes gravel and difficult drilling around 28'.	Well Depth: Solid Pipe: Stick Up Pipe: Screen Pipe:

Penetration Resistance (N) Guide:				Type of Drill Rig: 850 Track Rig
Cohesionless Soils (Sands, Gravels)		Cohesive Soils (Silts, Clays)		Arrow-Board: Signs: Cones:
Relative Density	Penetration Resistance	Consistency	Penetration Resistance	Hollow Stem Auger.
Very Loose	0 - 4	Very Soft	0 - 2	
Loose	4 - 10	Soft	2 - 4	
Medium Dense	10 - 30	Medium Stiff	4 - 8	
Dense	30 - 50	Stiff	8 - 15	
Very Dense	Over 50	Very Stiff	15 - 30	Sampler Type: SPT Size: 2' Automatic Hammer Weight: 140 lbs. Fall: 30"
N=Sum of Second and Third 6" Blow Counts		Hard	Over 30	
Terms Used for Second Entry of Descriptions: and = 40-50%, some = 10-40%, trace = 10% or less				Core Barrel Type: Size:

LAWRENCE
LMRC RAIL TRAIL OVER MANCHESTER STREET

STATE	FED. AID PROJ. NO.	SHEET NO.	TOTAL SHEETS
MA	-	133	225
PROJECT FILE NO.	608930		

BORING LOGS

BORING NOTES:

1. LOCATION OF BORINGS SHOWN ON THE PLANS THUS: ⌖
2. BORINGS ARE TAKEN FOR PURPOSE OF DESIGN AND SHOW CONDITIONS AT BORING POINTS ONLY, BUT DO NOT NECESSARILY SHOW THE NATURE OF THE MATERIALS TO BE ENCOUNTERED DURING CONSTRUCTION.
3. WATER LEVELS SHOWN ON THE BORING LOGS WERE OBSERVED AT THE TIME OF TAKING BORINGS AND DO NOT NECESSARILY SHOW THE TRUE GROUND WATER LEVEL.
4. FIGURES IN COLUMNS INDICATE NUMBER OF BLOWS REQUIRED TO DRIVE A 1 $\frac{3}{8}$"I.D. SPLIT SPOON SAMPLER 6" USING A 140 POUND WEIGHT FALLING 30".
5. BORING SAMPLES ARE STORED AT A STORAGE FACILITY LOCATED ON ROUTE 114 (219 WINTHROP AVE) IN LAWRENCE, MA. THE CONTRACTOR MAY EXAMINE THE SOIL AND ROCK SAMPLES BY CONTACTING THE MASSDOT GEOTECHNICAL SECTION AT 10 PARK PLAZA, BOSTON, MA.
6. ALL BORINGS WERE MADE IN JULY 2017.
7. BORINGS WERE MADE BY GEOSEARCH, INC, 11 CHOCKSETT RD, STERLING, MA 01564.
8. THE NORTH AMERICAN VERTICAL DATUM (NAVD) OF 1988 IS USED THROUGHOUT.

DATE	DESCRIPTION
10/28/2022	FIRST STRUCTURAL SUBMITTAL

THIS SHEET IS APPROVED FOR CONSTRUCTION BY MASSDOT
AUTHORIZED SIGNATORY: _____ STATE BRIDGE ENGINEER
USE ONLY PRINTS OF LATEST DATE

A00860 - 72
608930_BR2-3(L04030).DWG Plotted on 28-Oct-2022 1:13 PM
Proposal No. 608930-128034
First Structural Submittal (S1) October 28, 2022

LAWRENCE
LMRC RAIL TRAIL OVER MANCHESTER STREET

STATE	FED. AID PROJ. NO.	SHEET NO.	TOTAL SHEETS
MA	-	134	225
PROJECT FILE NO.	608930		

DEMOLITION DETAILS

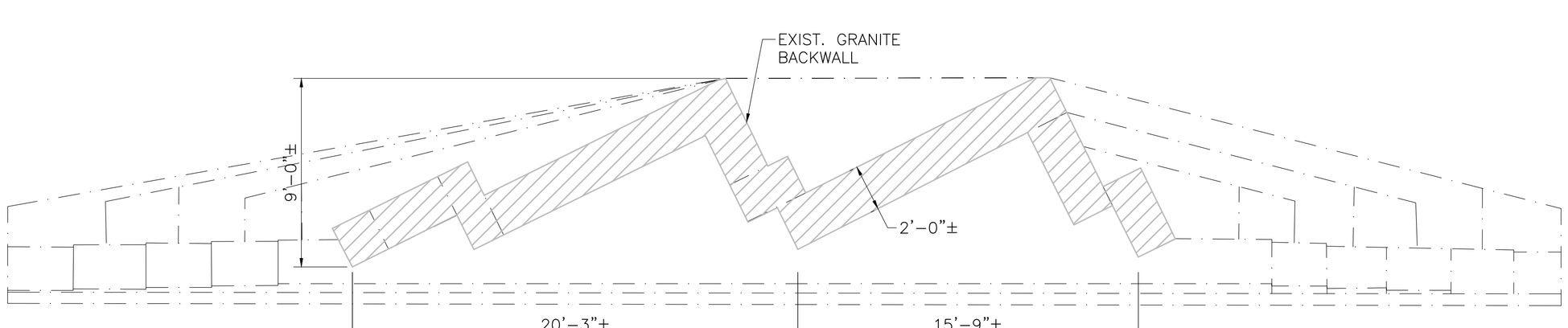

PLAN – EXISTING NORTH ABUTMENT
(SOUTH ABUTMENT SIMILAR)
SCALE: ¼" = 1'-0"

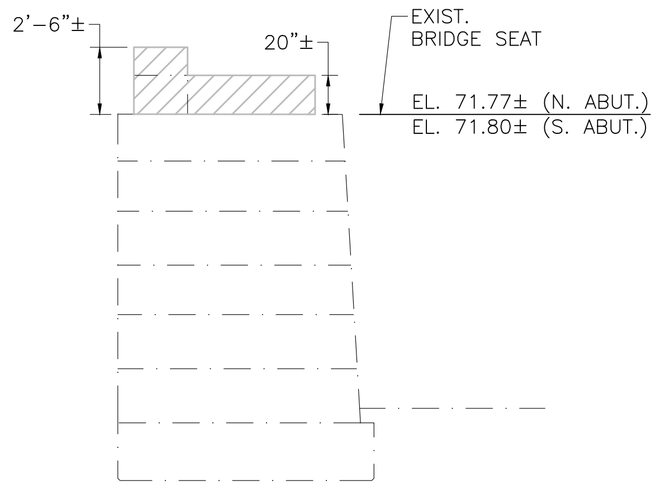

EXISTING ABUTMENT SECTION
SCALE: ¼" = 1'-0"

LEGEND:

DENOTES LIMIT OF EXISTING SUBSTRUCTURE TO BE DEMOLISHED

10/28/2022	FIRST STRUCTURAL SUBMITTAL
DATE	DESCRIPTION

THIS SHEET IS APPROVED FOR CONSTRUCTION BY MASSDOT
AUTHORIZED SIGNATORY: _____ STATE BRIDGE ENGINEER
USE ONLY PRINTS OF LATEST DATE

608930_BR4(L04030).DWG Plotted on 28-Oct-2022 1:13 PM
Proposal No. 608930-128034
A00860 - 73
October 28, 2022
First Structural Submittal (S1)

LAWRENCE
LMRC RAIL TRAIL OVER MANCHESTER STREET

STATE	FED. AID PROJ. NO.	SHEET NO.	TOTAL SHEETS
MA	-	135	225
PROJECT FILE NO.	608930		

PLAN AND ELEVATION

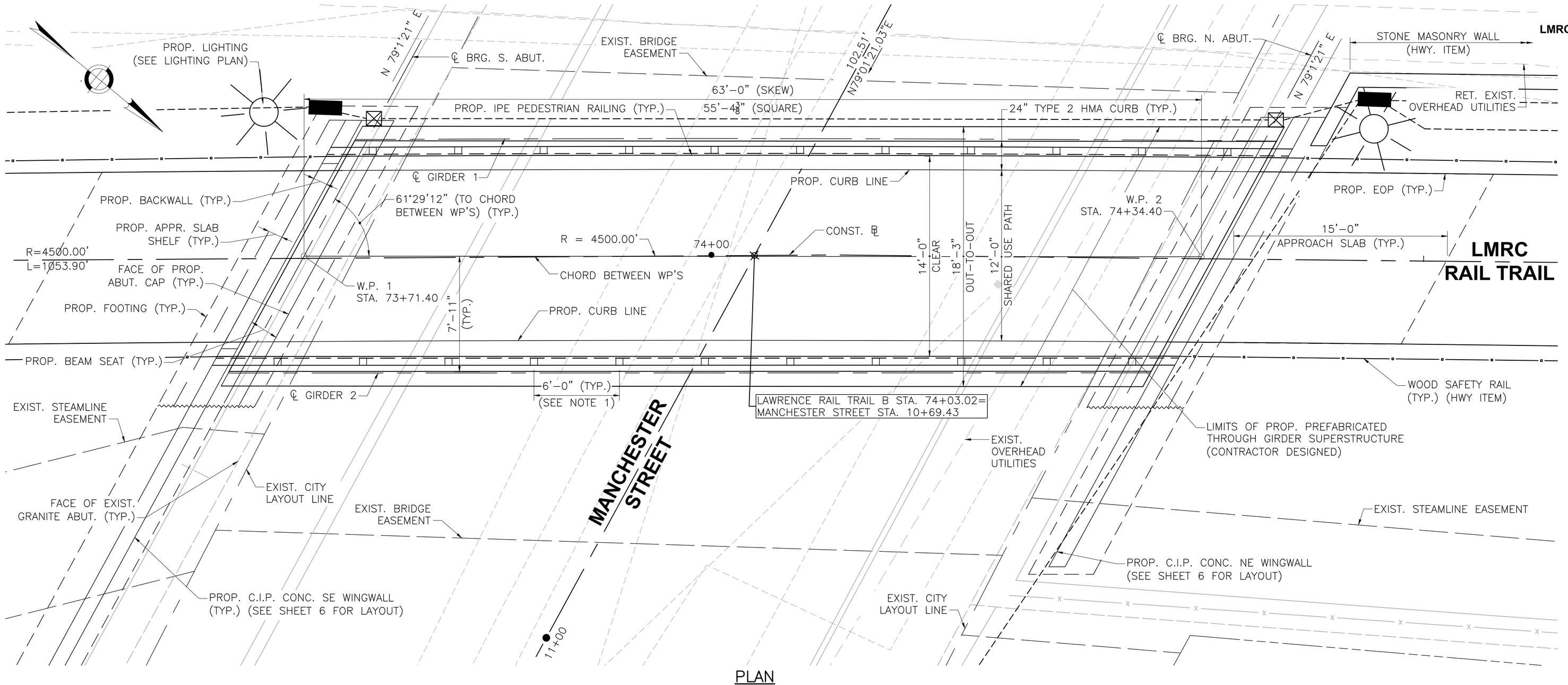

PLAN
SCALE: ¼"=1'-0"

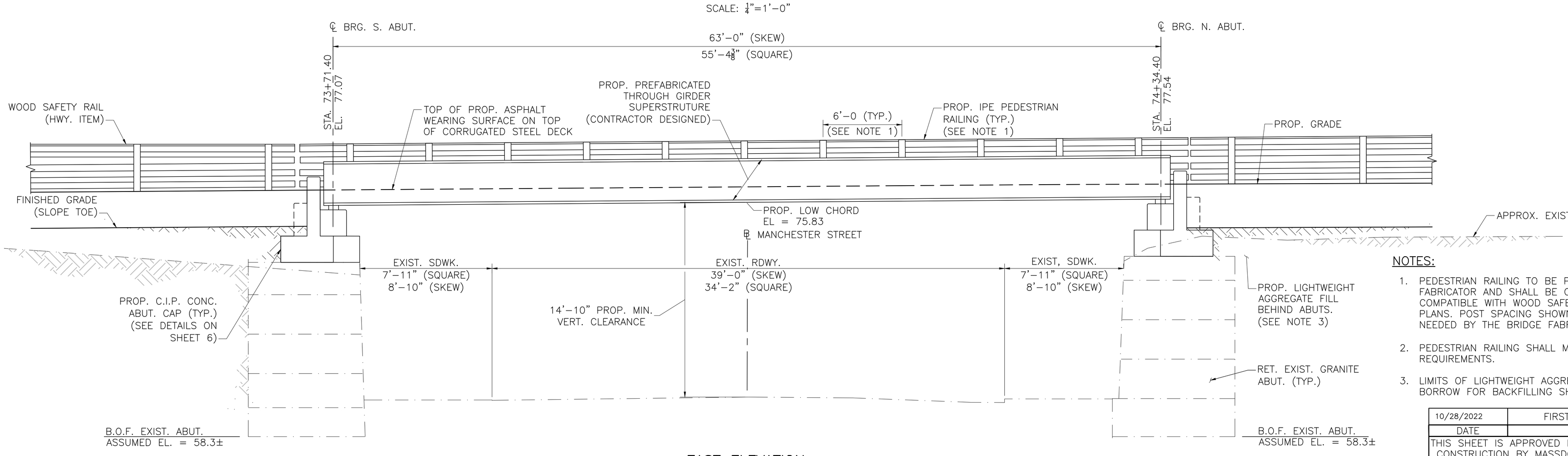

EAST ELEVATION
SCALE: ¼" = 1'-0"

NOTES:

1. PEDESTRIAN RAILING TO BE PROVIDED BY BRIDGE FABRICATOR AND SHALL BE CONSISTENT AND COMPATIBLE WITH WOOD SAFETY RAIL, SEE HIGHWAY PLANS. POST SPACING SHOWN MAY BE ADJUSTED AS NEEDED BY THE BRIDGE FABRICATOR.
2. PEDESTRIAN RAILING SHALL MEET ADA/MA AAB REQUIREMENTS.
3. LIMITS OF LIGHTWEIGHT AGGREGATE FILL AND GRAVEL BORROW FOR BACKFILLING SHOWN ON SHEET 7.

10/28/2022	FIRST STRUCTURAL SUBMITTAL
DATE	DESCRIPTION
THIS SHEET IS APPROVED FOR CONSTRUCTION BY MASSDOT	
AUTHORIZED SIGNATORY:	STATE BRIDGE ENGINEER
USE ONLY PRINTS OF LATEST DATE	

608930_BR5(L04030).DWG Plotted on 28-Oct-2022 1:13 PM
Proposal No. 608930-128034
October 28, 2022
First Structural Submittal (S1)
A00860 - 74

LAWRENCE
LMRC RAIL TRAIL OVER MANCHESTER STREET

STATE	FED. AID PROJ. NO.	SHEET NO.	TOTAL SHEETS
MA	-	136	225
PROJECT FILE NO.	608930		

ABUTMENT PLAN AND ELEVATION

608930_BR6(L04030).DWG Plotted on 28-Oct-2022 1:13 PM

Proposal No. 608930-128034

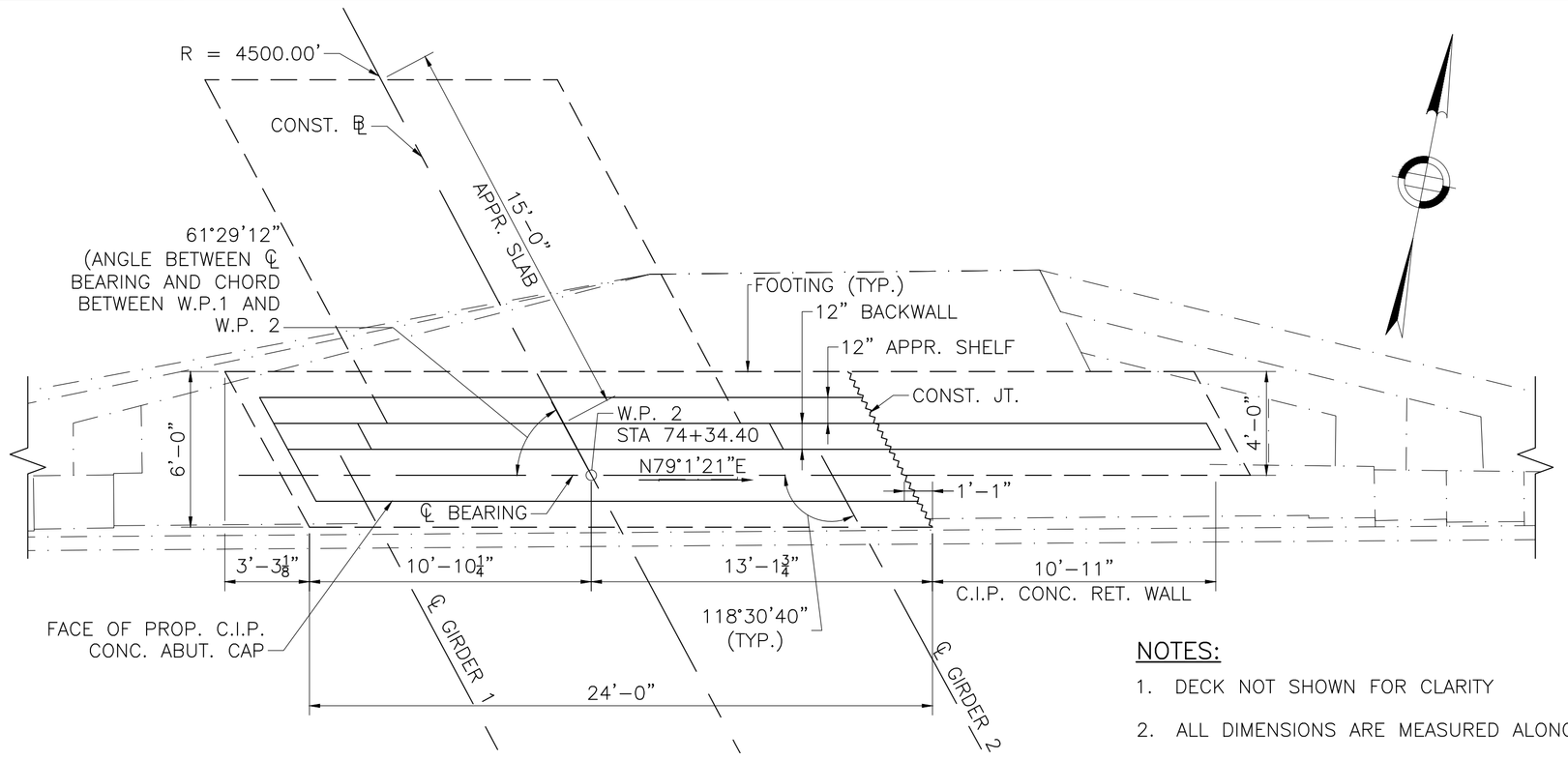

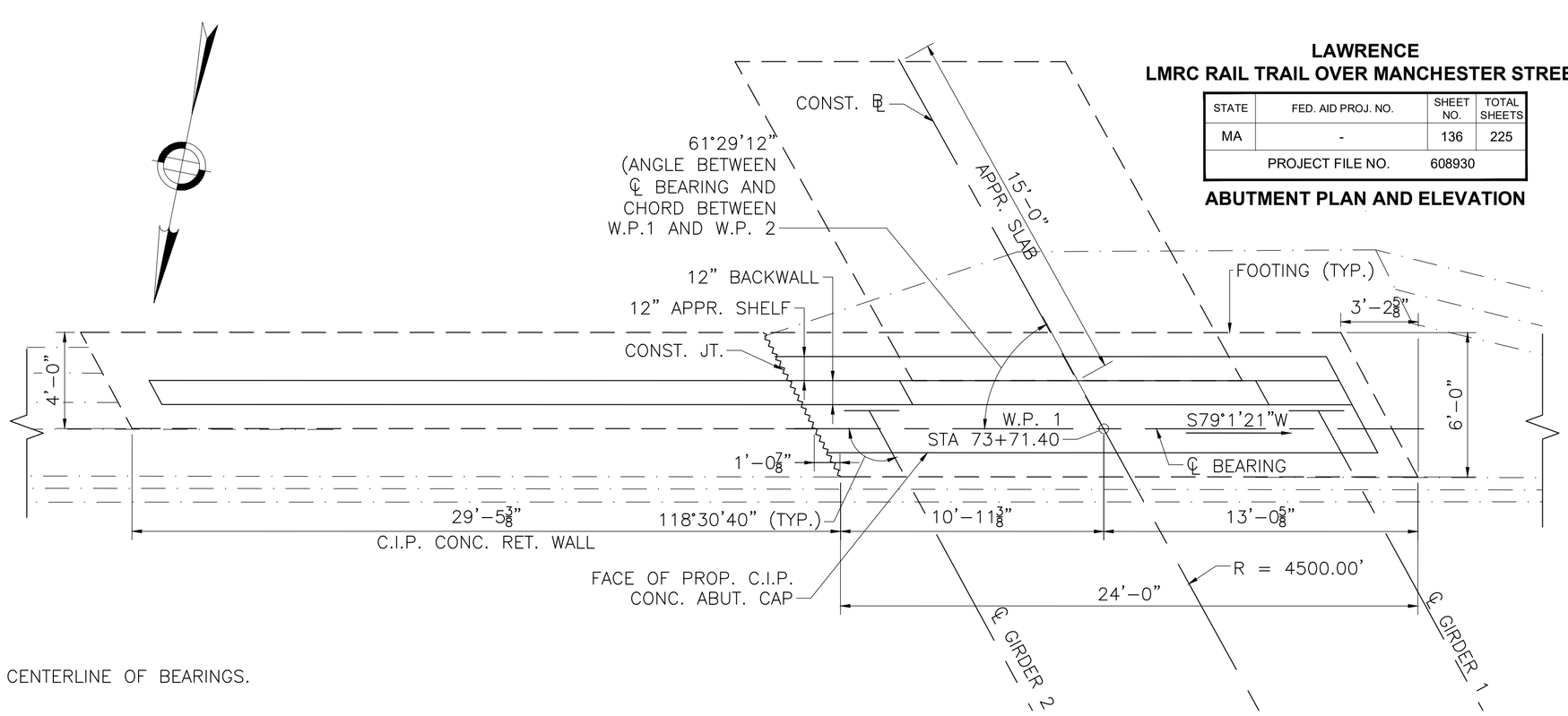

NOTES:

1. DECK NOT SHOWN FOR CLARITY
2. ALL DIMENSIONS ARE MEASURED ALONG CENTERLINE OF BEARINGS.

PLAN – NORTH ABUTMENT

SCALE: ¼" = 1'–0"

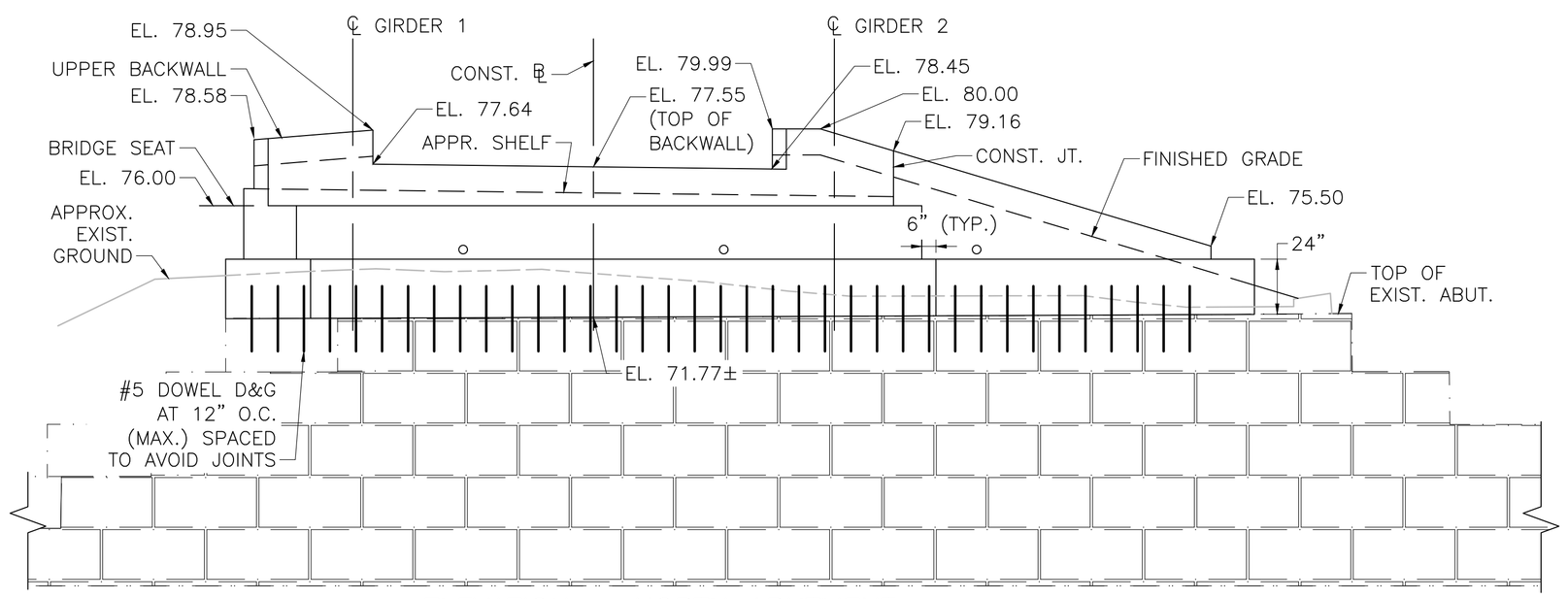

ELEVATION – NORTH ABUTMENT

SCALE: ¼" = 1'–0"

PLAN – SOUTH ABUTMENT

SCALE: ¼" = 1'–0"

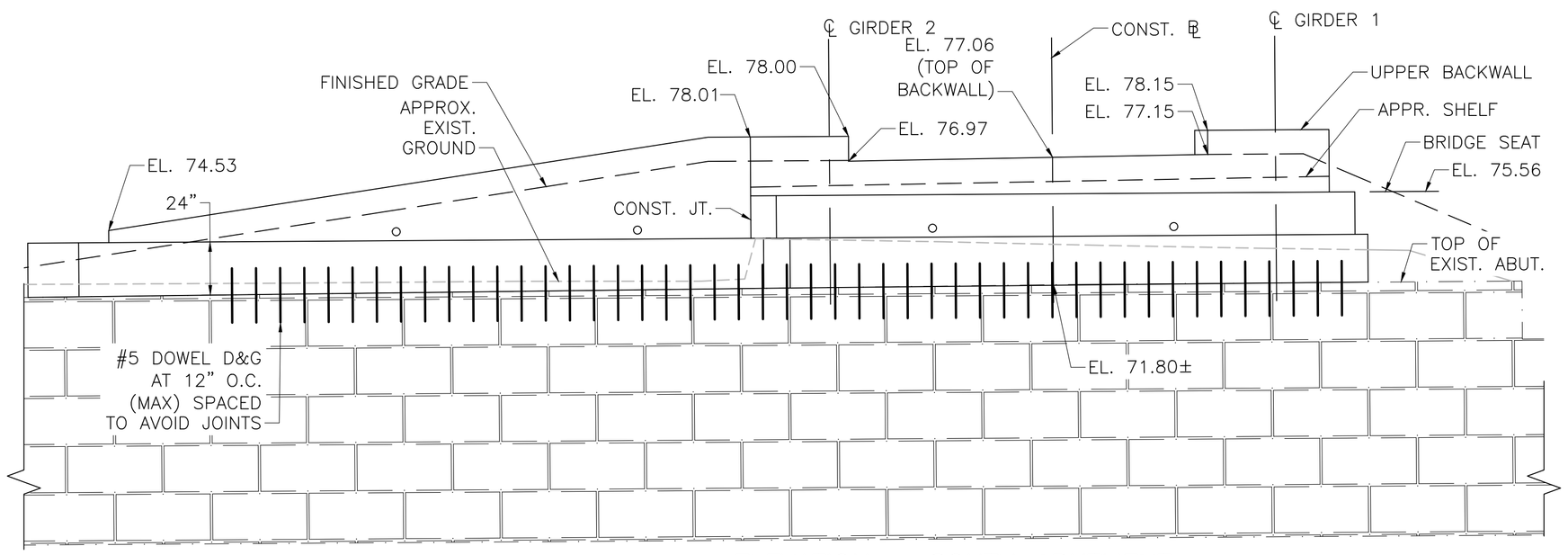

ELEVATION – SOUTH ABUTMENT

SCALE: ¼" = 1'–0"

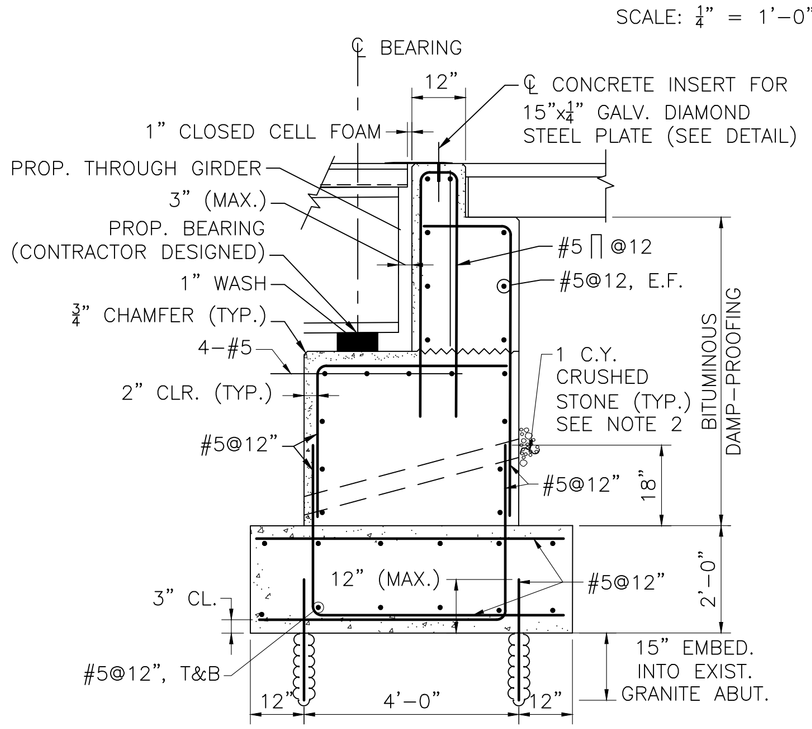

TYPICAL ABUTMENT SECTION

SCALE: ½" = 1'–0"

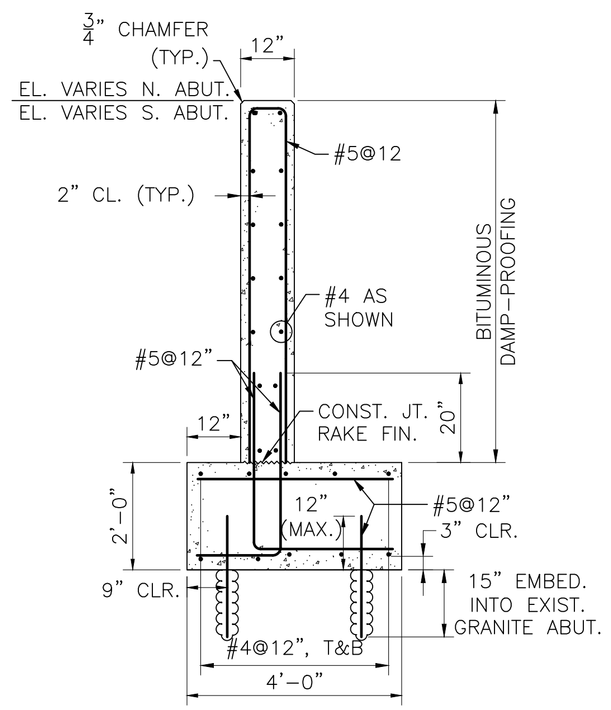

TYPICAL WINGWALL SECTION

SCALE: ½" = 1'–0"

ABUTMENT AND WINGWALL NOTES:

1. MEMBRANE WATERPROOFING AND 8"x16"x2", 4000 PSI, 3/4 INCH, 610 CEMENT CONCRETE BLOCKS LAID IN MORTAR OR OTHER WATERPROOFING PROTECTIVE COURSE, MIN. 2" THICK AS SPECIFIED IN MASSDOT STANDARD SPECIFICATIONS.
2. 4" ø WEEP HOLES 10'–0" O.C. (JUST ABOVE PROTECTIVE COURSE). PROVIDE 1 CUBIC YARD OF CRUSHED STONE AT EACH END OF WEEP HOLE.
3. ALL CONCRETE SHALL BE 4000 PSI, 1.5 INCH, 565 CEMENT CONCRETE EXCEPT THE ABUTMENT BACKWALL AND WINGWALL STEMS, WHICH SHALL BE 4000 PSI, 3/4 INCH, 610 CEMENT CONCRETE.
4. BRIDGE SEAT ELEVATIONS ARE BOTTOM OF MASONRY PLATE ELEVATIONS AT CENTERLINE OF BEARING. THE BRIDGE SEAT ELEVATIONS SHOWN ARE PRELIMINARY AND BASED ON AN ASSUMED STRUCTURE DEPTH OF 1'–6" FROM TOP OF DECK AT ℄ OF CONSTRUCTION TO BOTTOM OF MASONRY PLATE. ACTUAL ELEVATION SHALL BE BASED ON CONTRACTOR DESIGN CHOSEN TYPE AS REQUIRED BY THE BRIDGE MANUFACTURER. MINIMUM LOW CHORD ELEVATION IS SHOWN ON THE ELEVATION VIEW. THE CONTRACTOR SHALL DETERMINE THE FINAL BRIDGE SEAT ELEVATIONS PRIOR TO SUBMITTING REINFORCING STEEL FABRICATION DRAWINGS.
5. THE FACTORED BEARING PRESSURE AT THE ABUTMENT = 6.41 KSF, PER AASHTO LRFD BRIDGE DESIGN SPECIFICATIONS STRENGTH 1 LIMIT STATE. FACTORED BEARING RESISTANCE AT THE ABUTMENTS = 7.4 KSF. FACTORED BEARING RESISTANCE IS THE PRODUCT OF THE NOMINAL BEARING RESISTANCE AND A RESISTANCE FACTOR OF 0.45.
6. SEE MISCELLANEOUS DETAILS FOR LIMITS OF LIGHTWEIGHT AGGREGATE FILL. USE GRAVEL BORROW FOR AREA BEYOND LIMITS OF LIGHTWEIGHT AGGREGATE FILL.
7. THE FACTORED BEARING PRESSURE AT THE SOUTHEAST AND NORTHEAST WINGWALL = 4.34 KSF, PER AASTO LRFD BRIDGE DESIGN SPECIFICATIONS STRENGTH 1 LIMIT STATE. FACTORED BEARING RESISTANCE AT THE SOUTHEAST AND NORTHEAST WINGWALL = 6.0 KSF. FACTORED BEARING RESISTANCE IS THE PRODUCT OF THE NOMINAL BEARING RESISTANCE AND A RESISTANCE FACTOR OF 0.45.
8. THE FACTORED BEARING PRESSURE AT THE NORTHWEST WINGWALL = 4.78 KSF, PER AASTO LRFD BRIDGE DESIGN SPECIFICATIONS STRENGTH 1 LIMIT STATE. FACTORED BEARING RESISTANCE AT THE NORTHWEST WINGWALL = 5.1 KSF. FACTORED BEARING RESISTANCE IS THE PRODUCT OF THE NOMINAL BEARING RESISTANCE AND A RESISTANCE FACTOR OF 0.45.

10/28/2022	FIRST STRUCTURAL SUBMITTAL
DATE	DESCRIPTION

THIS SHEET IS APPROVED FOR CONSTRUCTION BY MASSDOT AUTHORIZED SIGNATORY: _____ STATE BRIDGE ENGINEER

USE ONLY PRINTS OF LATEST DATE

First Structural Submittal (S1) October 28, 2022

STATE	FED. AID PROJ. NO.	SHEET NO.	TOTAL SHEETS
MA	-	137	225
PROJECT FILE NO.	608930		

MISCELLANEOUS DETAILS

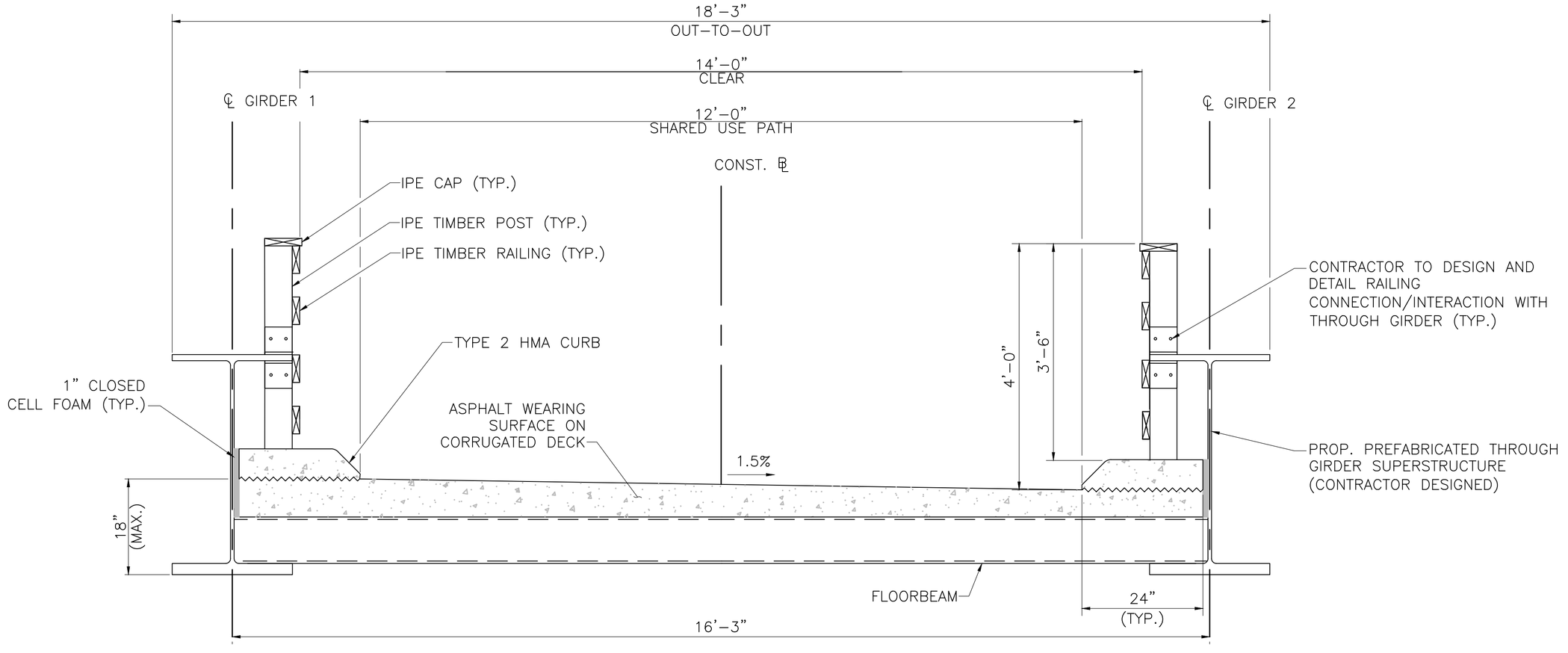

TYPICAL TRANSVERSE SECTION
(LOOKING UPSTATION)
SCALE: ¾" = 1'–0"

PREFABRICATED BRIDGE NOTES:

1. IN ACCORDANCE WITH THE 2009 AASHTO LRFD GUIDE SPECIFICATIONS FOR THE DESIGN OF PEDESTRIAN BRIDGES WITH INTERIM SPECIFICATIONS THROUGH 2015 FOR PEDESTRIAN LOADING OF 90 PSF AND H10 LOADING.
2. TOTAL ASSUMED PREFABRICATED WEIGHT OF SUPERSTRUCTURE, INCLUDING DECK, SHALL NOT EXCEED 50 KIPS WITHOUT WRITTEN APPROVAL OF THE ENGINEER.
3. STRUCTURAL MEMBERS ARE SHOWN FOR CONCEPTUAL PRESENTATION ONLY AND TO BE FINALIZED BY APPROVED BRIDGE MANUFACTURER.
4. PREFABRICATED BRIDGE SHALL BE GALVANIZED AND PAINTED.
5. CONTRACTOR'S DESIGN SHALL INCLUDE ALL BEARING DEVICES AND VERIFICATION OF ALL ELEVATIONS TO ACCOMMODATE THE DESIGN.

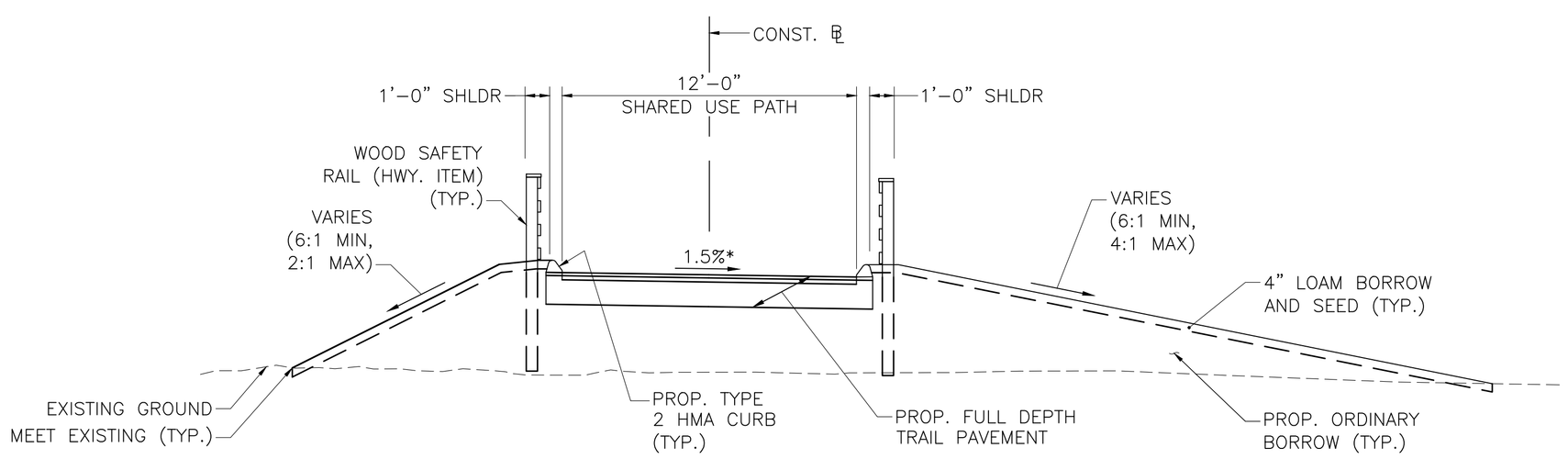

TYPICAL APPROACH SECTION
SCALE: ¼" = 1'–0"

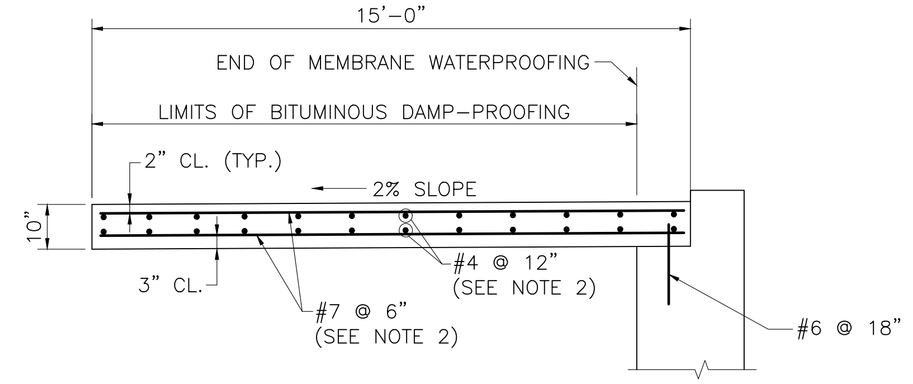

NOTES:
1. APPROACH SLAB TO BE 4000 PSI, 1.5 INCH, 565 CEMENT CONCRETE.
2. PLACE LONGITUDINAL REINFORCEMENT PARALLEL TO CENTERLINE OF CONSTRUCTION. PLACE TRANSVERSE REINFORCEMENT PARALLEL TO ABUTMENT.

APPROACH SLAB DETAILS
SCALE: ½" = 1'–0"

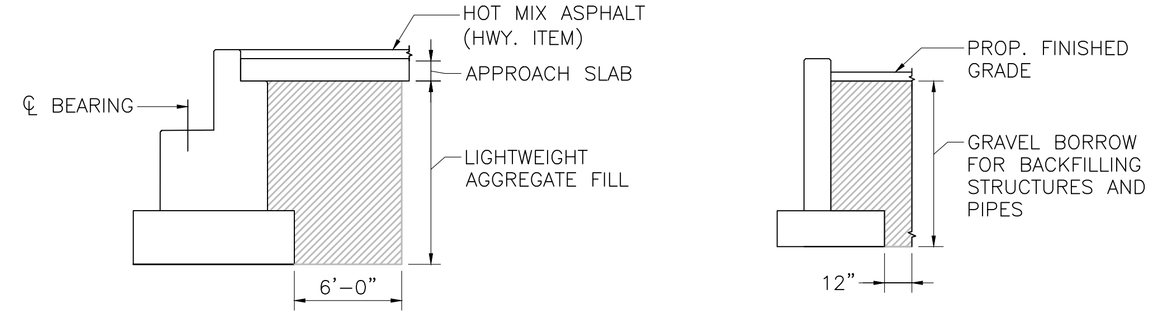

ABUTMENT WINGWALL

NOTES:
1. HATCHED AREA INDICATES LIMITS OF BACKFILL.
2. LIGHTWEIGHT AGGREGATE FILL SHALL NOT EXTEND BEYOND ABUTMENT FOOTING.

PAYMENT LIMITS FOR LIGHTWEIGHT AGGREGATE FILL AND GRAVEL BORROW
NOT TO SCALE

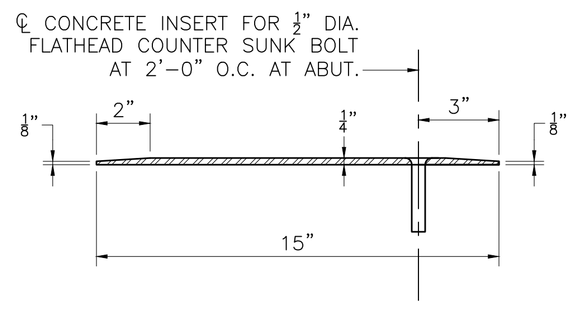

DIAMOND STEEL PLATE DETAIL
SCALE: 3" = 1'–0"

10/28/2022	FIRST STRUCTURAL SUBMITTAL
DATE	DESCRIPTION
THIS SHEET IS APPROVED FOR CONSTRUCTION BY MASSDOT AUTHORIZED SIGNATORY:	STATE BRIDGE ENGINEER
USE ONLY PRINTS OF LATEST DATE	

608930_BR7(L04030).DWG Plotted on 28-Oct-2022 1:13 PM
Proposal No. 608930-128034
October 26, 2022
First Structural Submittal (S1)
A00860 - 76

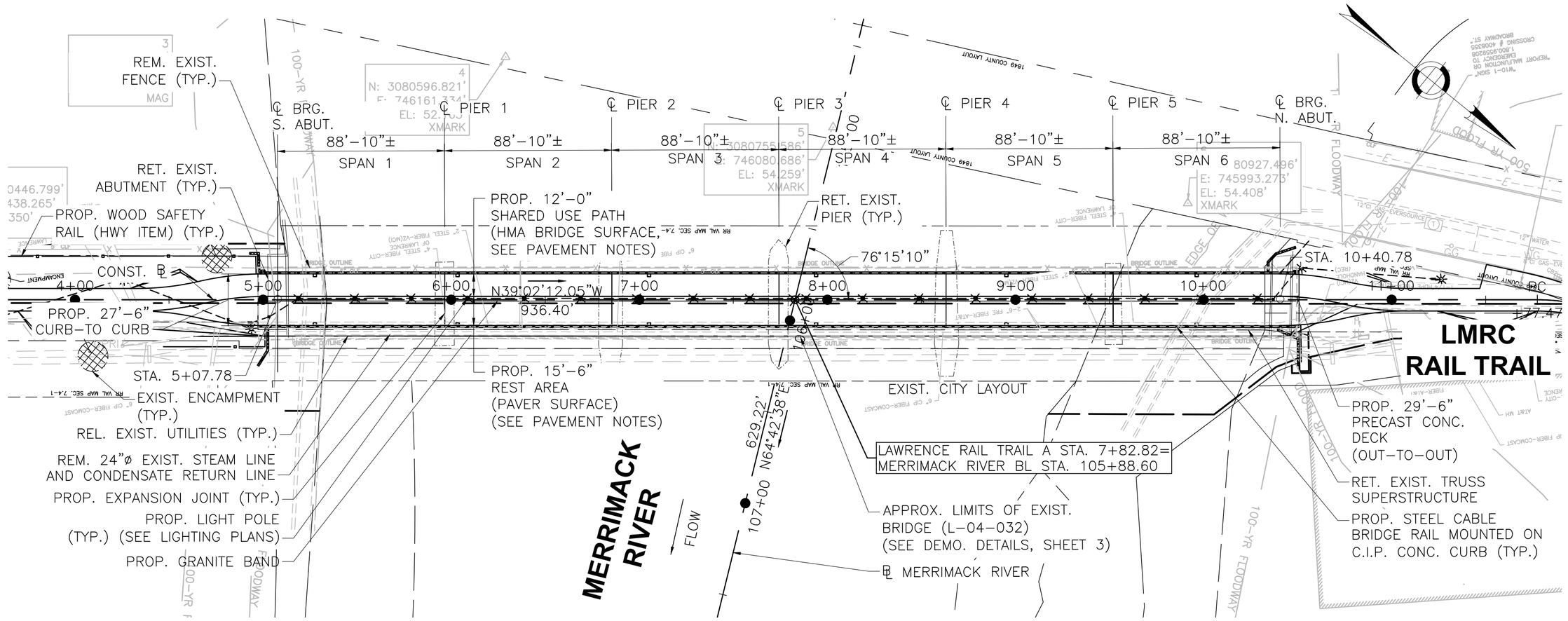

KEY PLAN
SCALE: 1"=40'

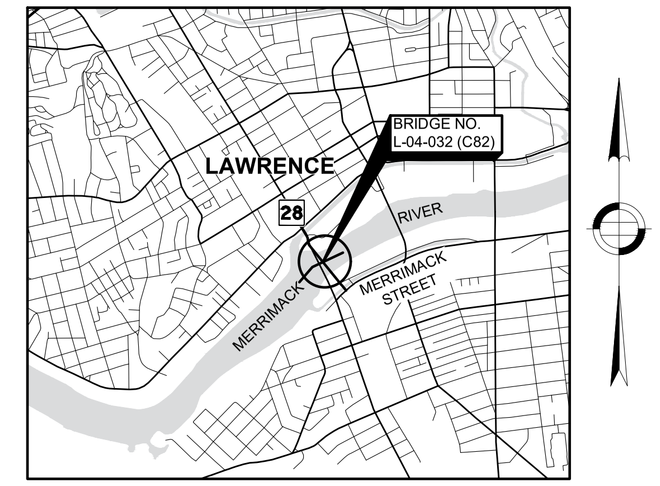

LOCUS MAP
SCALE: 1"=2000'

LAWRENCE
LMRC RAIL TRAIL OVER MERRIMACK RIVER

STATE	FED. AID PROJ. NO.	SHEET NO.	TOTAL SHEETS
MA	-	138	225
PROJECT FILE NO.	608930		

KEY PLAN, PROFILES, LOCUS AND INDEX

INDEX OF SHEETS

SHEET NUMBER	SHEET TITLE
1	KEY PLAN, PROFILES, LOCUS AND INDEX
2	GENERAL NOTES
3	DEMOLITION DETAILS
4	PLAN AND ELEVATION
5	FRAMING PLAN
6	STRINGER REPLACEMENT DETAILS
7	DECK DETAILS (1 OF 2)
8	DECK DETAILS (2 OF 2)
9	MISCELLANEOUS DETAILS
10	EXPANSION JOINT DETAILS
11	RAILING DETAILS (1 OF 2)
12	RAILING DETAILS (2 OF 2)

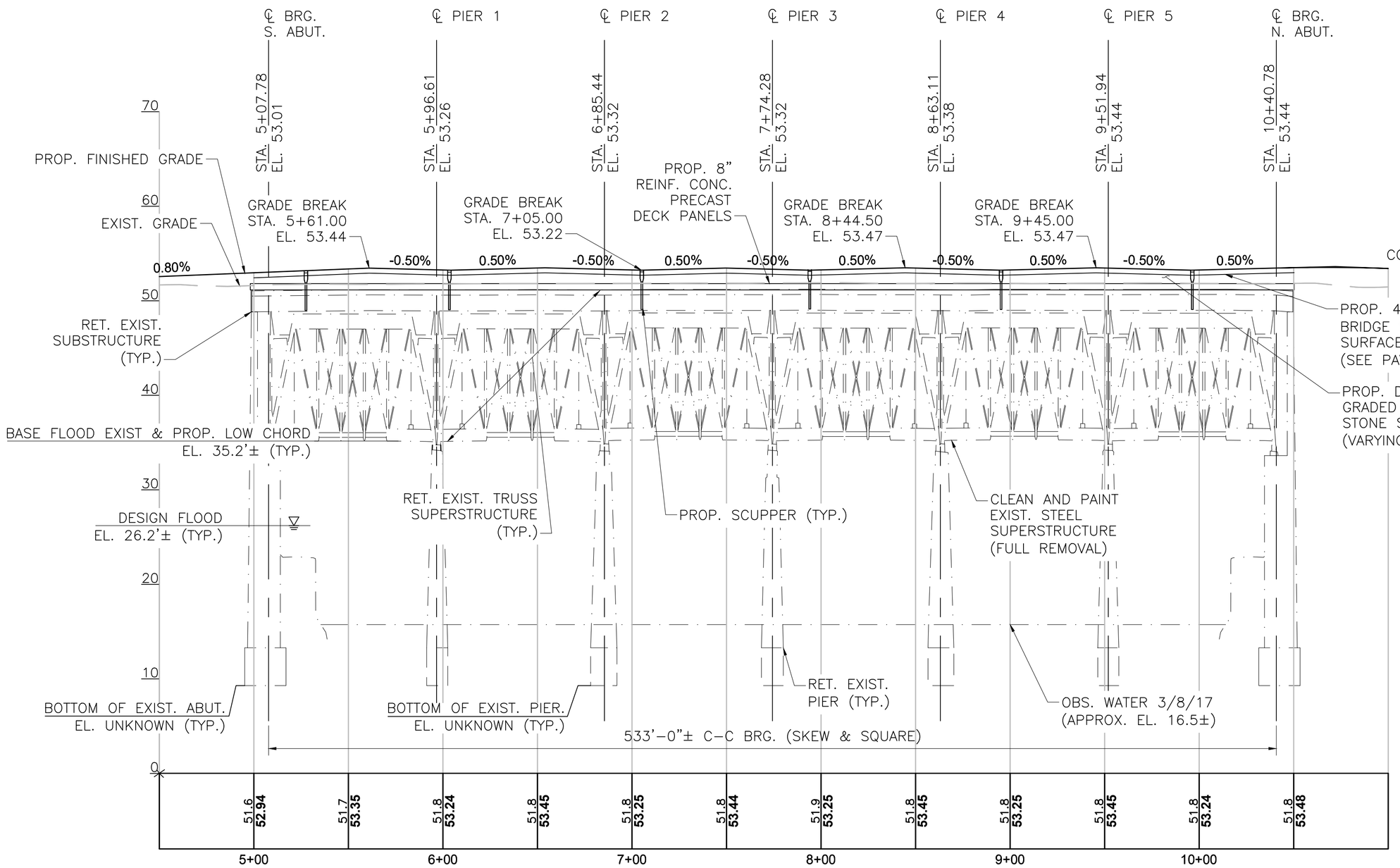

LMRC RAIL TRAIL PROFILE
HORIZONTAL SCALE: 1" = 40'
VERTICAL SCALE" 1" = 8'

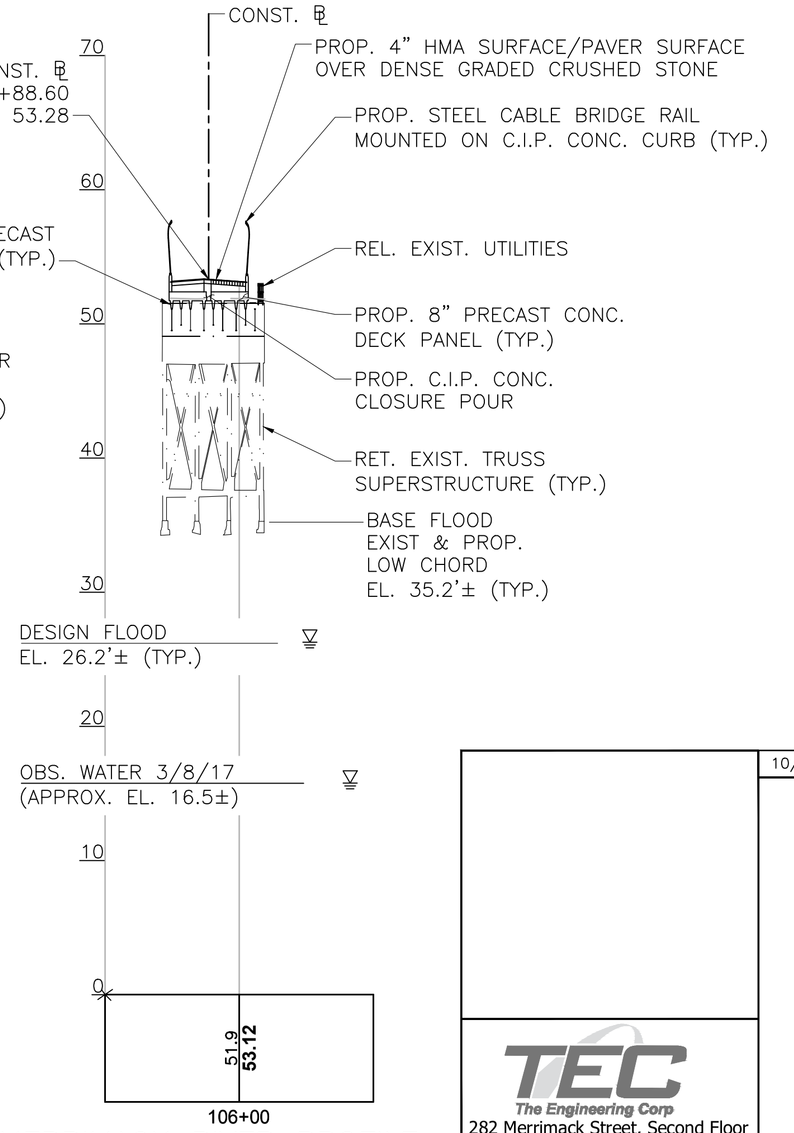

MERRIMACK RIVER PROFILE
HORIZONTAL SCALE: 1" = 40'
VERTICAL SCALE" 1" = 8'

	10/28/2022	FIRST STRUCTURAL SUBMITTAL

MassDOT Massachusetts Department of Transportation Highway Division

PROPOSED BRIDGE REHABILITATION
LAWRENCE
LMRC RAIL TRAIL
OVER MERRIMACK RIVER

MASSACHUSETTS DEPARTMENT OF TRANSPORTATION
HIGHWAY DIVISION
10 PARK PLAZA BOSTON, MASS

TEC The Engineering Corp
282 Merrimack Street, Second Floor
Lawrence, MA 01843
978-794-1792

STATE BRIDGE ENGINEER _____ CHIEF ENGINEER _____

608930_BR1(L04032).DWG Plotted on 28-Oct-2022 12:22 PM

Proposal No. 608930-128034

A00860 - 77

October 28, 2022

First Structural Submittal (S1)

STATE	FED. AID PROJ. NO.	SHEET NO.	TOTAL SHEETS
MA	-	139	225
PROJECT FILE NO.	608930		

GENERAL NOTES

DESIGN:

IN ACCORDANCE WITH THE 2020 AASHTO LRFD BRIDGE DESIGN SPECIFICATIONS, 9TH EDITION, AND THE 2ND EDITION AASHTO LRFD GUIDE SPECIFICATIONS FOR THE DESIGN OF PEDESTRIAN BRIDGES WITH INTERIM REVISIONS THROUGH 2015, FOR H10 LOADING AND 90 PSF PEDESTRIAN LOADING.

SURVEY BENCHMARKS:

BENCHMARK 2: MAG NAIL (38)
N: 3080755.586
E: 746080.686
ELEVATION= 54.259'

BENCHMARK 3: MAG NAIL (40)
N: 3080483.024
E: 746268.082
ELEVATION= 44.630'

BENCHMARK 4: XMARK
N: 3080596.821
E: 746161.334
ELEVATION= 52.165'

BENCHMARK 5: XMARK
N: 3080755.586
E: 746080.686
ELEVATION= 54.259'

BENCHMARK 6: XMARK
N: 3080927.496
E: 745993.273
ELEVATION= 54.408'

ELEVATIONS ARE BASED ON THE NORTH AMERICAN VERTICAL DATUM (NAVD) OF 1988.

THE CONTRACTOR SHALL BE RESPONSIBLE FOR CONDUCTING A SURVEY TO FIELD VERIFY ALL EXISTING CONDITIONS AND DIMENSIONS PRIOR TO THE FABRICATION OF ANY PRECAST CONCRETE ELEMENTS.

SCALES:

SCALES NOTED ON THE PLANS ARE NOT APPLICABLE TO REDUCED SIZE PRINTS. DIVIDE SCALES BY 2 FOR HALF-SIZE PRINTS (A3).

UTILITIES:

DURING CONSTRUCTION, THE CONTRACTOR SHALL LOCATE AND PROTECT FROM DAMAGE ALL UTILITIES THAT ARE TO REMAIN IN PLACE.

GEOTECHNICAL:

NO GEOTECHNICAL TESTING WAS PERFORMED AT THIS LOCATION.

STRUCTURAL STEEL

1. ALL STRUCTURAL STEEL SHALL BE AASHTO M270 (A709) GRADE 50, UNLESS OTHERWISE NOTED.
2. ALL BOLTS SHALL BE IN ACCORDANCE WITH ASTM F3125 GRADE 325 UNLESS OTHERWISE NOTED.
3. ALL BOLT HOLES SHALL BE $\frac{15}{16}$"ø UNLESS NOTED OTHERWISE.
4. ALL BOLTED CONNECTIONS SHALL BE CONSIDERED SLIP CRITICAL CONNECTIONS WITH CLASS C FAYING SURFACES.
5. SHEAR CONNECTORS SHALL BE IN ACCORDANCE WITH AASHTO M169 GRADES 1015 OR 1020.
6. ALL PROPOSED STRUCTURAL STEEL SHALL BE HOT DIP GALVANIZED.
7. ANCHOR BOLTS FOR LIGHT POLE BASES SHALL BE ASTM F1554 GRADE 55.

REINFORCEMENT

ALL REINFORCING STEEL SHALL BE EPOXY COATED.

REINFORCING STEEL SHALL CONFORM TO THE REQUIREMENTS OF AASHTO M 31 GRADE 60. UNLESS OTHERWISE NOTED ON THE CONSTRUCTION DRAWINGS, ALL BARS SHALL BE LAPPED AS FOLLOWS:

MODIFICATION CONDITION:	#4 BARS	#5 BARS	#6 BARS
1. NONE	16"	19"	23"
2. 12" OF CONCRETE BELOW BAR	20"	25"	30"
3. EPOXY COATED BARS, COVER < 3db, OR CLEAR SPACING < 6db	23"	29"	34"
4. COATED BARS, ALL OTHER CASES	18"	23"	27"
5. CONDITION 2. AND 3.	26"	32"	39"
6. CONDITION 2. AND 4.	24"	30"	36"

ALL OTHER BARS SHALL BE LAPPED AS SHOWN ON THE CONSTRUCTION DRAWINGS.

CONCRETE

PRECAST ELEMENTS:

THE FABRICATOR IS RESPONSIBLE FOR THE DESIGN AND INSTALLATION OF LIFT HOOKS FOR ALL PRECAST ELEMENTS. UNDER NO CIRCUMSTANCES WILL THE REBAR ELEMENTS SHOWN ON THE PLAN BE USED TO LIFT THE PRECAST ELEMENTS. FOR ADDITIONAL REQUIREMENTS, REFER TO THE "PRECAST DECK PANELS" SECTION OF ITEM 992.1.

PRECAST CONCRETE:
4000 PSI, $\frac{3}{4}$", 585 HP CEMENT CONCRETE: DECK PANELS

CAST-IN-PLACE CONCRETE:
4000 PSI, $\frac{3}{4}$", 585 HP CEMENT CONCRETE: SAFETY CURB, CLOSURE POUR, CONCRETE RETAINER

MEMBRANE WATERPROOFING:

ALL MEMBRANE WATERPROOFING USED ON BRIDGE DECKS SHALL BE MEMBRANE WATERPROOFING FOR BRIDGE DECKS - SPRAY APPLIED.

ESTIMATED QUANTITIES
(NOT GUARANTEED)

ITEM DESCRIPTION	QUANTITY	UNITS
PARTIAL DEMOLITION OF SUPERSTRUCTURE OF BRIDGE NO. L-04-032 (C82)	1	LS
DENSE GRADED CRUSHED STONE FOR SUB-BASE	785	TON
SUPERPAVE BRIDGE SURFACE COURSE - 9.5 (SSC-B - 9.5)	60	TON
SUPERPAVE BRIDGE PROTECTIVE COURSE - 9.5 (SPC-B - 9.5)	100	TON
STRUCTURAL STEEL-COATED STEEL BRIDGE NO. L-04-032 (C82)	66000	LB
CLEAN AND PAINT (FULL REMOVAL) STEEL BRIDGE NO. L-04-032 (C82)	1	LS
ALTERATION TO BRIDGE STRUCTURE NO. L-04-032 (C82)	1	LS
TEMPORARY PROTECTIVE SHIELDING, BRIDGE NO. L-04-032 (C82)	1	LS

HYDRAULIC DESIGN DATA	
DRAINAGE AREA (SQ. MILES)	4660
DESIGN FLOOD DISCHARGE (C.F.S.)	58,000
DESIGN FLOOD FREQUENCY (YEARS)	10
DESIGN FLOOD VELOCITY (F.P.S.)	N/A
DESIGN FLOOD ELEVATION (FEET, NAVD)	26.20
BASE (100-YEAR) FLOOD DATA	
BASE FLOOD DISCHARGE (C.F.S.)	111,000
BASE FLOOD ELEVATION (FEET, NAVD)	35.20
DESIGN AND CHECK SCOUR DATA	
DESIGN SCOUR FLOOD EVENT RETURN FREQUENCY (YEARS)	25
DESIGN FLOOD ABUTMENT SCOUR DEPTH (FEET)	N/A
DESIGN FLOOD PIER SCOUR DEPTH (FEET)	N/A
CHECK SCOUR FLOOD EVENT RETURN FREQUENCY (YEARS)	50
CHECK FLOOD ABUTMENT SCOUR DEPTH (FEET)	N/A
CHECK FLOOD PIER SCOUR DEPTH (FEET)	N/A
FLOOD OF RECORD	
DISCHARGE (C.F.S.)	N/A
FREQUENCY (IF KNOWN, YEARS)	N/A
MAXIMUM ELEVATION (FEET, NAVD)	N/A
DATE (MM/YYYY)	N/A
HISTORY OF ICE FLOES	N/A
EVIDENCE OF SCOUR AND EROSION	N/A

10/28/2022	FIRST STRUCTURAL SUBMITTAL
DATE	DESCRIPTION
THIS SHEET IS APPROVED FOR CONSTRUCTION BY MASSDOT AUTHORIZED SIGNATORY:	STATE BRIDGE ENGINEER
USE ONLY PRINTS OF LATEST DATE	

608930_BR2(L04032).DWG Plotted on 28-Oct-2022 12:22 PM
Proposal No. 608930-128034
October 28, 2022
First Structural Submittal (S1)
A00860 - 78 - 50

LAWRENCE
LMRC RAIL TRAIL OVER MERRIMACK RIVER

STATE	FED. AID PROJ. NO.	SHEET NO.	TOTAL SHEETS
MA	-	140	225
PROJECT FILE NO.	608930		

DEMOLITION DETAILS

608930_BR3(L04032).DWG Plotted on 28-Oct-2022 12:22 PM

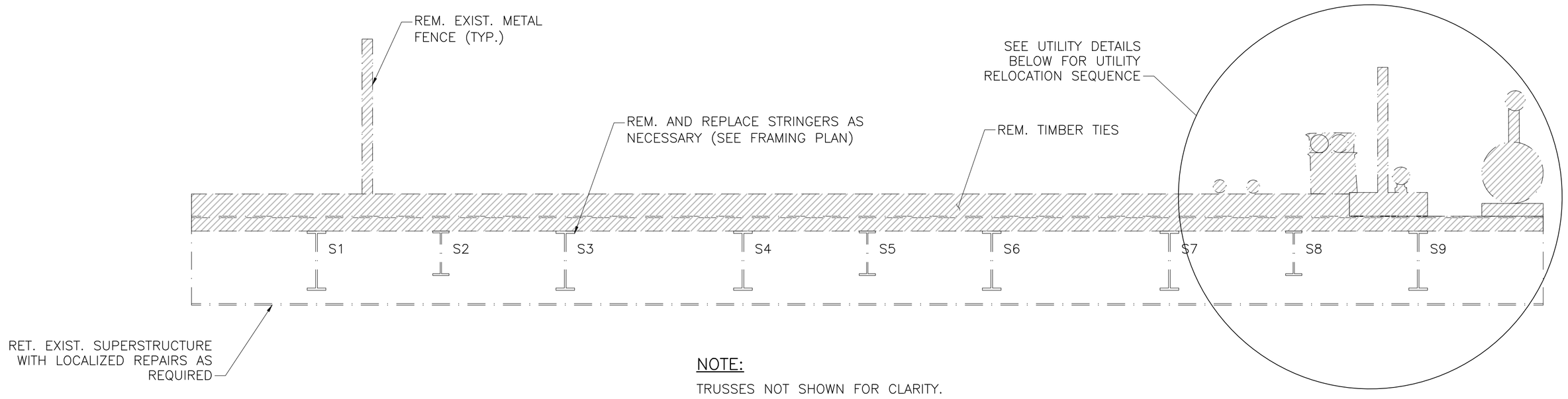

NOTE:

TRUSSES NOT SHOWN FOR CLARITY.

DEMOLITION SECTION
SCALE: $\frac{1}{2}$" = 1'–0"

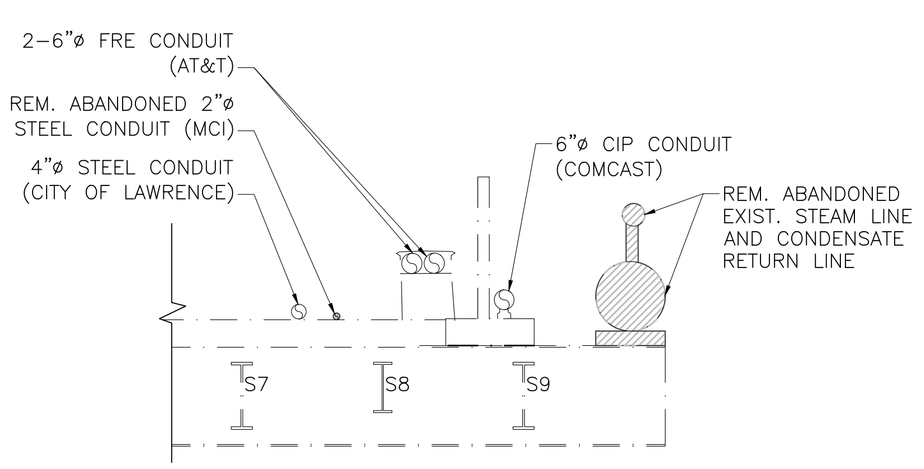

STAGE 1

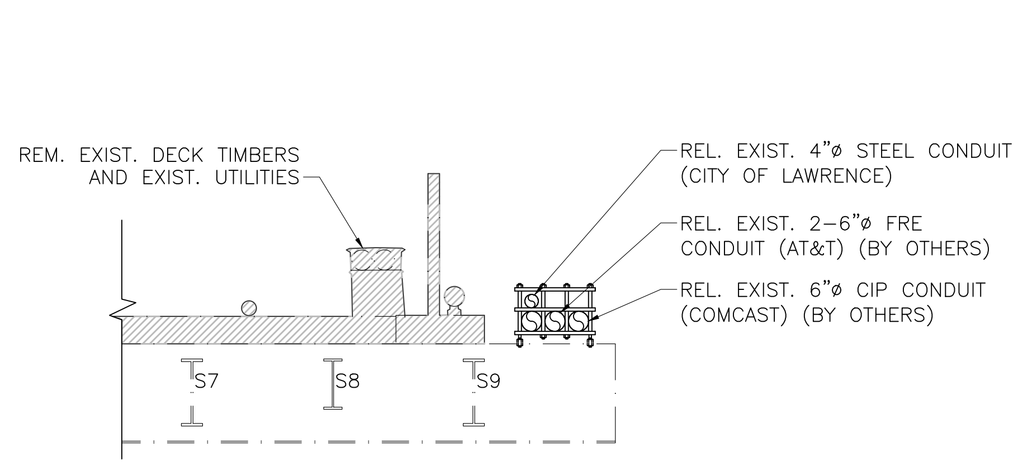

STAGE 2

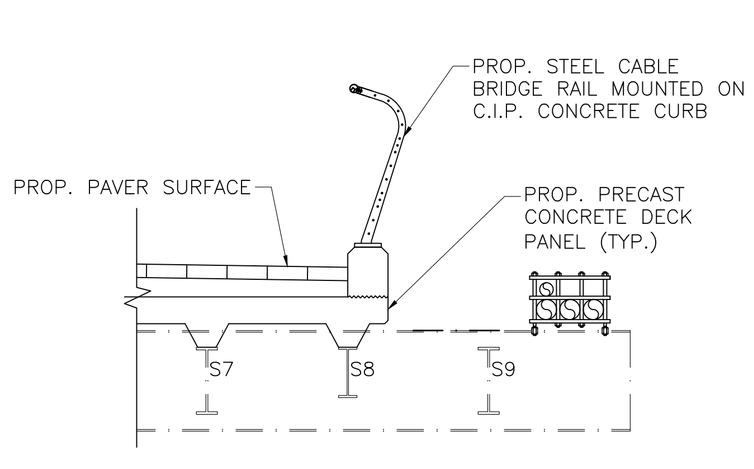

STAGE 3

UTILITY RELOCATION DETAILS
SCALE: $\frac{3}{8}$" = 1'–0"

STAGED CONSTRUCTION NOTES

STAGE 1: DEMOLISH EXISTING STEAM LINE AND CONDENSATE RETURN LINE.

STAGE 2: RELOCATE EXISTING UTILITIES, THEN REMOVE EXISTING DECK TIMBERS AND EXISTING UTILITIES

STAGE 3: CONSTRUCT PROPOSED DECK AND RAILING.

10/28/2022	FIRST STRUCTURAL SUBMITTAL
DATE	DESCRIPTION

THIS SHEET IS APPROVED FOR CONSTRUCTION BY MASSDOT
AUTHORIZED SIGNATORY: _____ STATE BRIDGE ENGINEER
USE ONLY PRINTS OF LATEST DATE

Proposal No. 608930-128034
October 28, 2022
First Structural Submittal (S1)

LAWRENCE
LMRC RAIL TRAIL OVER MERRIMACK RIVER

STATE	FED. AID PROJ. NO.	SHEET NO.	TOTAL SHEETS
MA	-	141	225
PROJECT FILE NO.	608930		

PLAN AND ELEVATION

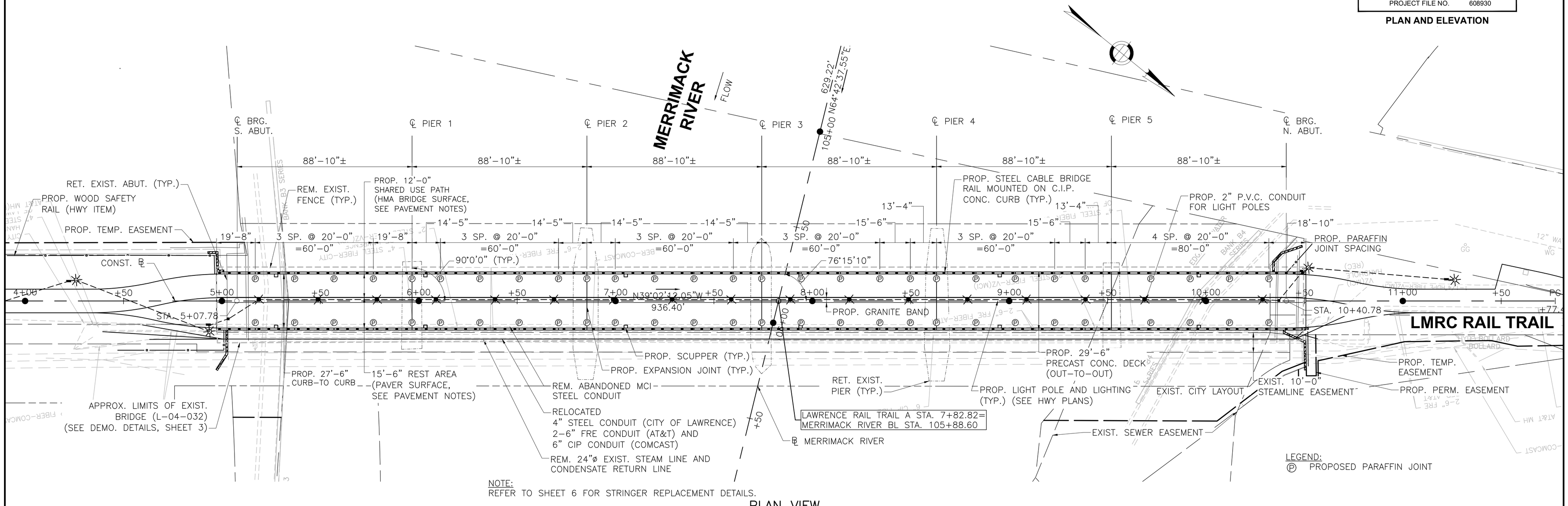

NOTE:
REFER TO SHEET 6 FOR STRINGER REPLACEMENT DETAILS.

PLAN VIEW
SCALE: ½" = 1'–0"

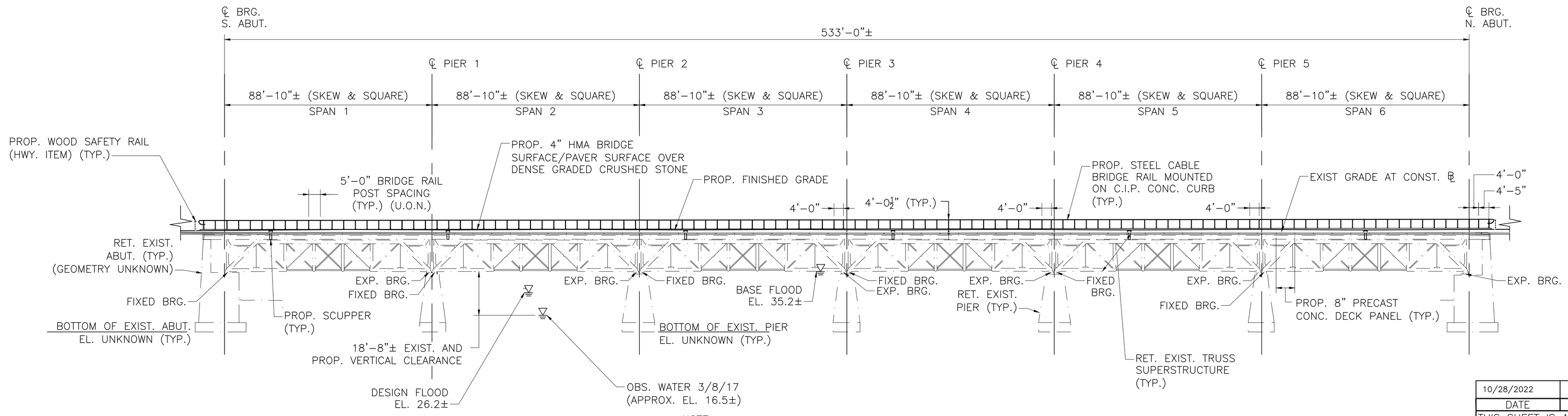

NOTE:
ALL EXISTING TRUSS BEARINGS WILL REMAIN IN PLACE AND UNDISTURBED.

ELEVATION VIEW (LOOKING SOUTH)
SCALE: ½" = 1'–0"

10/28/2022	FIRST STRUCTURAL SUBMITTAL
DATE	DESCRIPTION

THIS SHEET IS APPROVED FOR CONSTRUCTION BY MASSDOT
AUTHORIZED SIGNATORY: _____ STATE BRIDGE ENGINEER
USE ONLY PRINTS OF LATEST DATE

608930_BR4(L04032).DWG Plotted on 28-Oct-2022 12:23 PM
Proposal No. 608930-128034
October 28, 2022
First Structural Submittal (S1)
A00860 - 80

LAWRENCE
LMRC RAIL TRAIL OVER MERRIMACK RIVER

STATE	FED. AID PROJ. NO.	SHEET NO.	TOTAL SHEETS
MA	-	142	225
PROJECT FILE NO.	608930		

FRAMING PLAN

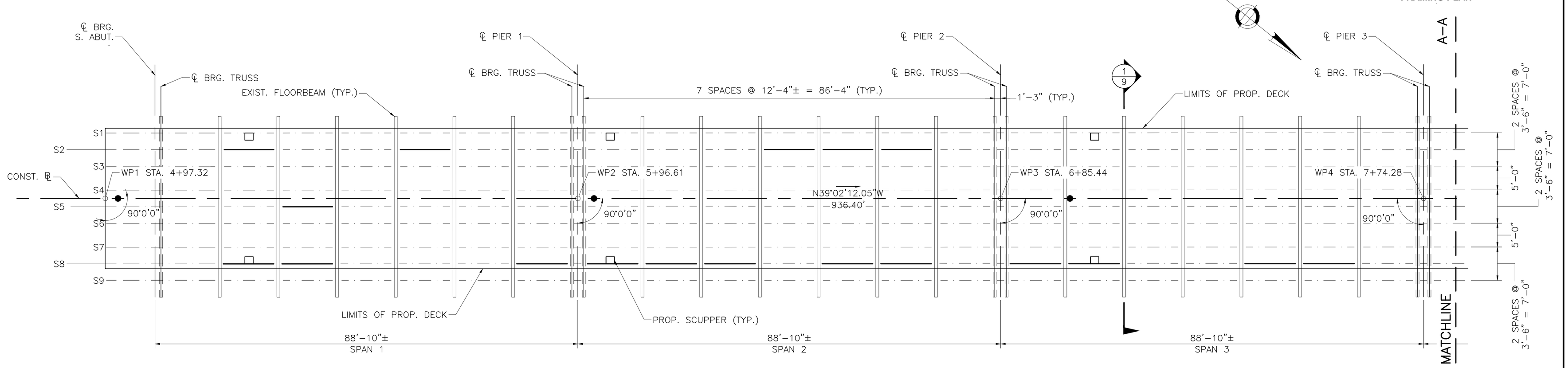

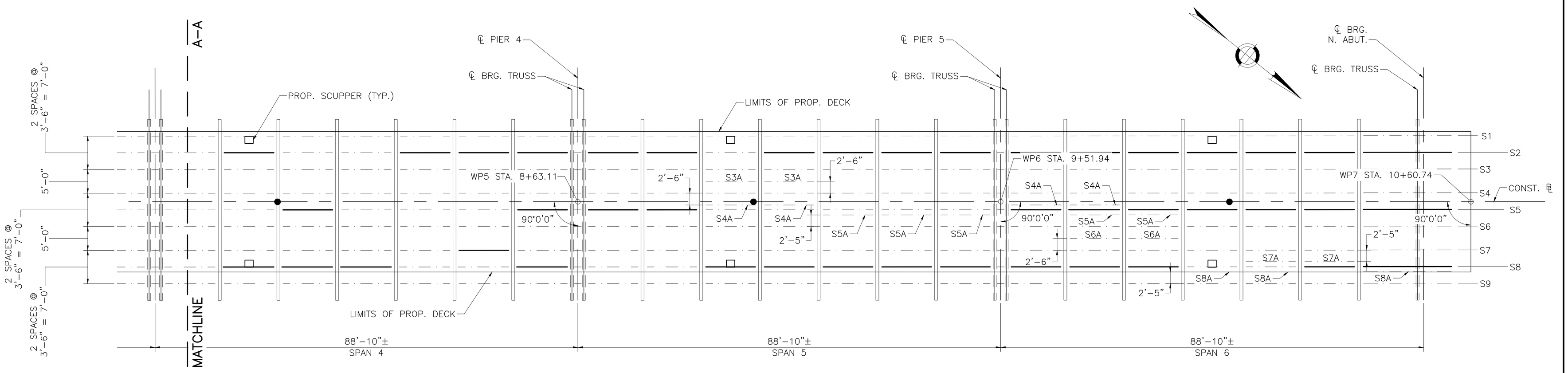

FRAMING PLAN
SCALE: 1"=10'-0"

NOTES:
1. STRINGER NOMENCLATURE AND REPLACEMENT LOCATIONS BASED ON THE WSP USA, INC. BRIDGE INSPECTION REPORT (DATED MAY 2020) AND FUTURE FOLLOW UP INSPECTIONS PRIOR TO PROJECT ADVERTISEMENT.
2. CONTRACTOR SHALL FIELD VERIFY REPLACEMENT LOCATIONS AND COORDINATE WITH ENGINEER TO DETERMINE ADDITIONAL STRINGER REPLACEMENTS AS NEEDED.
3. ALL STEEL SHALL CONFORM TO AASHTO M270 (ASTM A709) GRADE 50.
4. FOR STRINGER REPLACEMENT DETAILS, SEE SHEET 6.

LEGEND:
EXISTING STRINGER
STRINGER REPLACEMENT

10/28/2022	FIRST STRUCTURAL SUBMITTAL
DATE	DESCRIPTION

THIS SHEET IS APPROVED FOR CONSTRUCTION BY MASSDOT
AUTHORIZED SIGNATORY: STATE BRIDGE ENGINEER
USE ONLY PRINTS OF LATEST DATE

608930_BR5-6(L04032).DWG Plotted on 28-Oct-2022 12:23 PM
October 28, 2022
First Structural Submittal (S1)
Proposal No. 608930-128034
A00860 - 81

LAWRENCE
LMRC RAIL TRAIL OVER MERRIMACK RIVER

STATE	FED. AID PROJ. NO.	SHEET NO.	TOTAL SHEETS
MA	-	143	225
PROJECT FILE NO.	608930		

STRINGER REPLACEMENT DETAILS

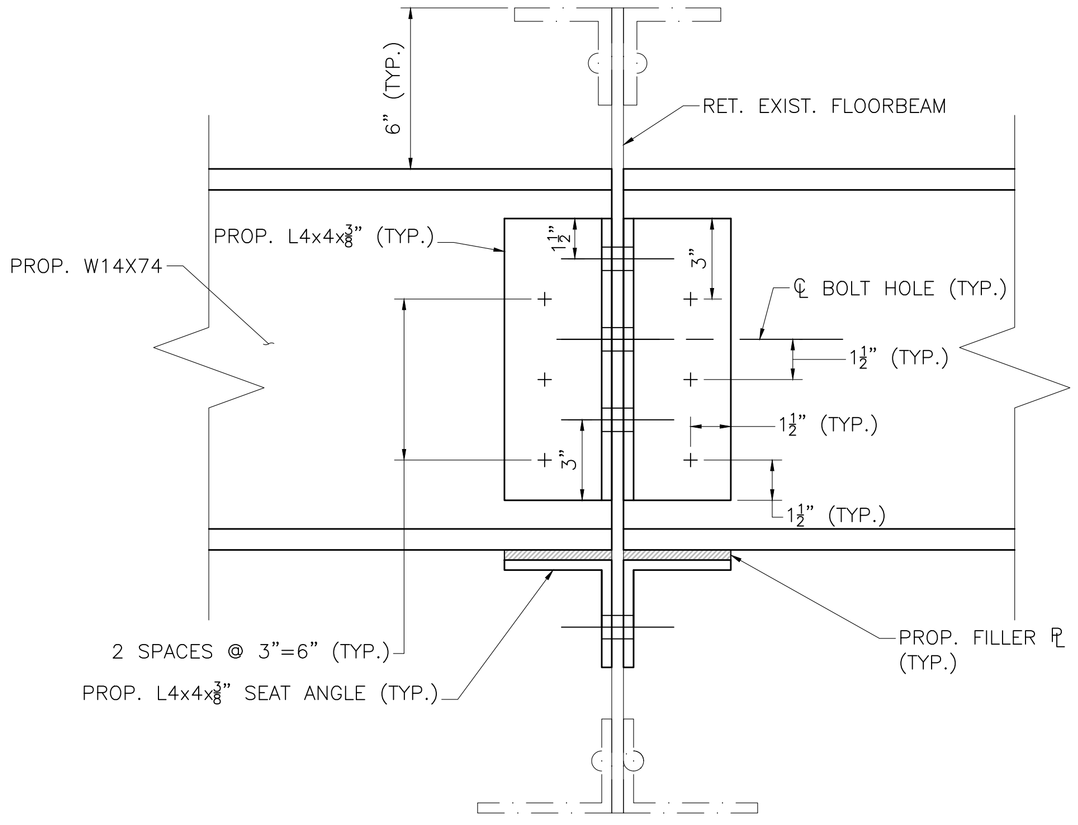

ELEVATION

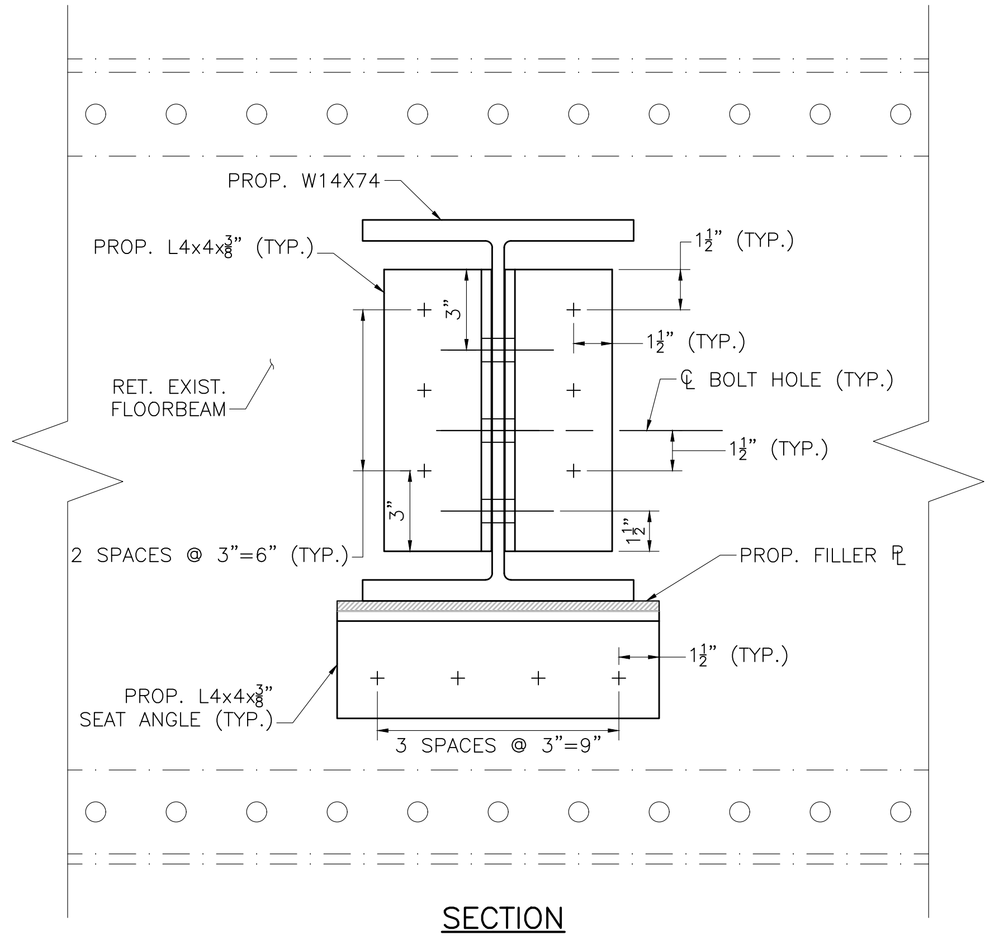

SECTION

TYPICAL STRINGER REPLACEMENT

STRINGER REPLACEMENT NOTES:

1. ANY ADJACENT STRINGERS NOT SCHEDULED FOR REPLACEMENT SHALL BE TEMPORARILY SUPPORTED DURING CONSTRUCTION.
2. CONTRACTOR SHALL VERIFY THAT EXISTING ADJACENT STRINGERS DO NOT BECOME MISALIGNED DURING STRINGER REPLACEMENT.
3. + DENOTES ⅞" ø A325 BOLT IN $\frac{15}{16}$" ø HOLE.
4. FOR STRINGER REPLACEMENT LOCATIONS, SEE SHEET 5.

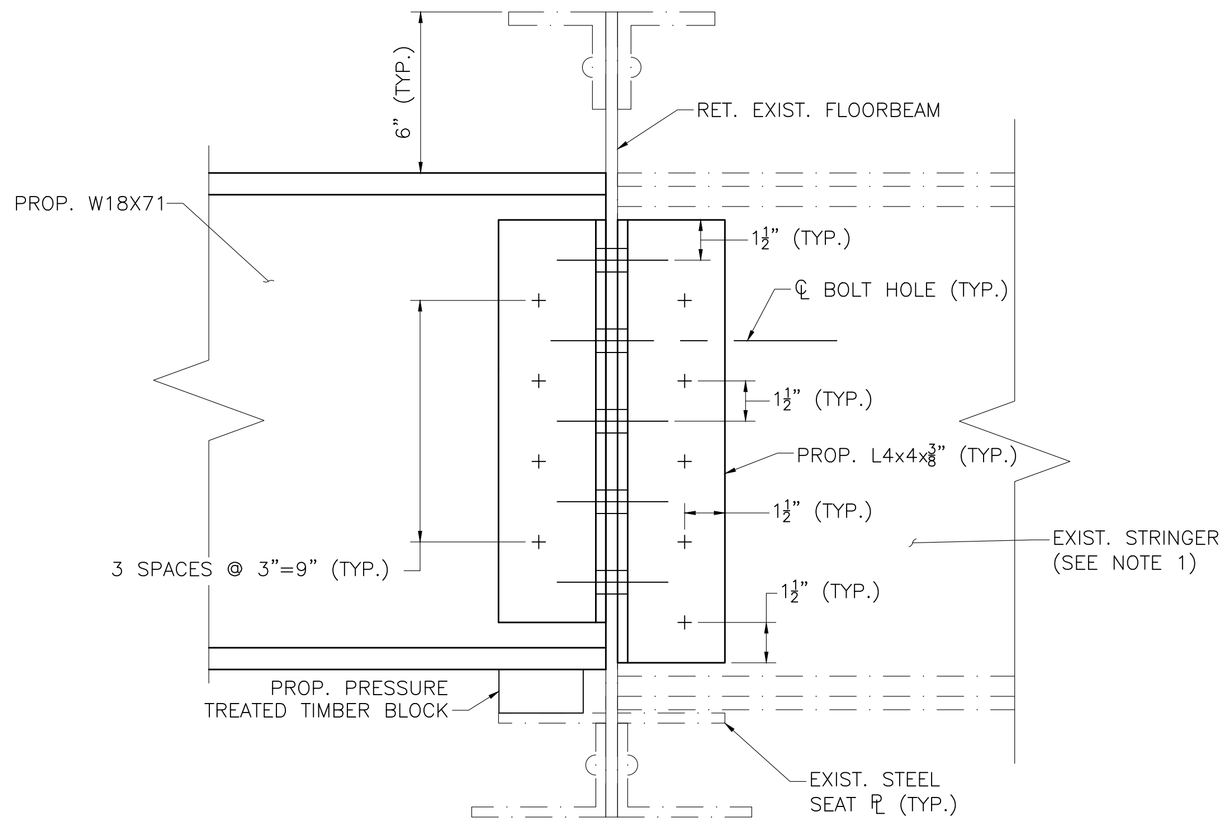

ELEVATION

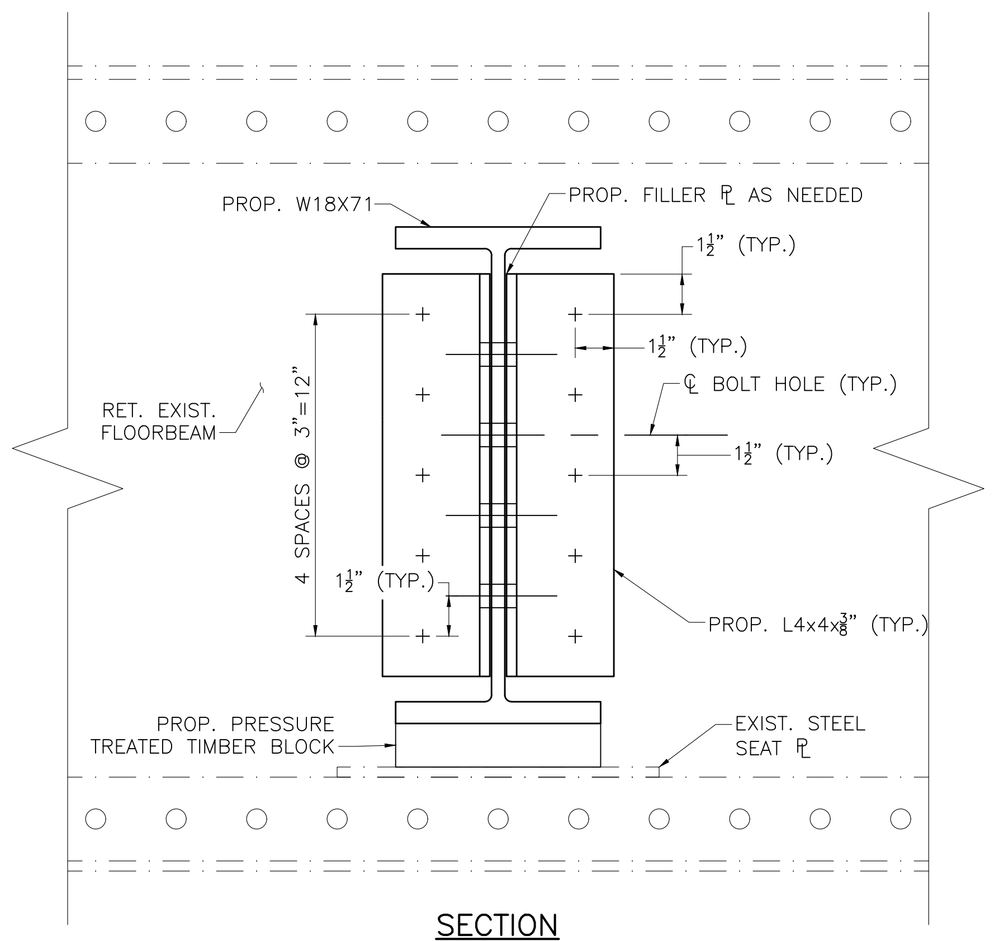

SECTION

STRINGER S7 REPLACEMENT

STRINGER REPAIR DETAILS

SCALE: 3" = 1'-0"

10/28/2022	FIRST STRUCTURAL SUBMITTAL
DATE	DESCRIPTION

THIS SHEET IS APPROVED FOR CONSTRUCTION BY MASSDOT
AUTHORIZED SIGNATORY: _____ STATE BRIDGE ENGINEER

USE ONLY PRINTS OF LATEST DATE

608930_BR5-6(L04032).DWG Plotted on 28-Oct-2022 12:23 PM
Proposal No. 608930-128034
First Structural Submittal (S1) October 26, 2022
A00860 - 82

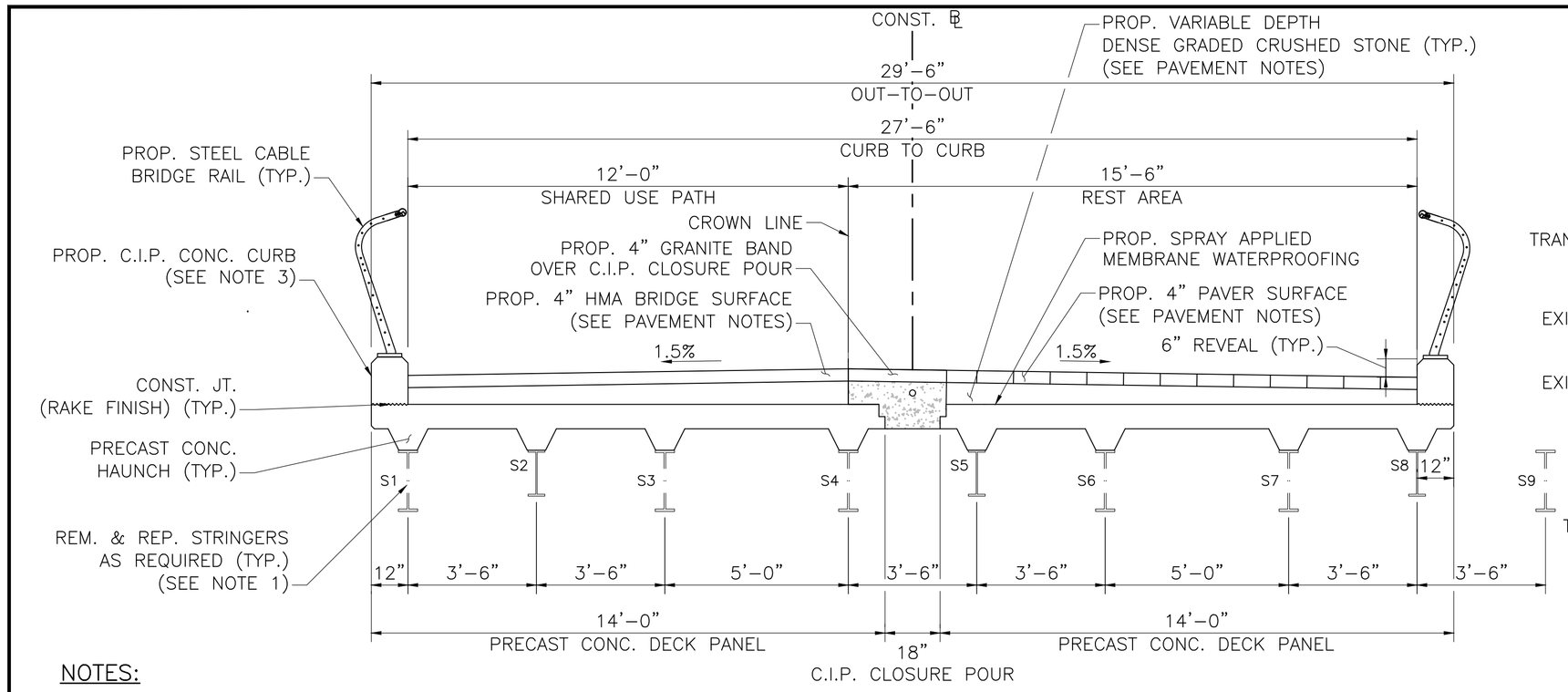

NOTES:

1. SEE FRAMING PLAN FOR STRINGER REPLACEMENT LOCATIONS AND SHEET 6 FOR STRINGER REPLACEMENT DETAILS.
2. SEE SECTION 1, SHEET 9 FOR RELOCATED UTILITY DETAILS.
3. CAST–IN–PLACE CONCRETE SAFETY CURB SHALL BE 4000 PSI, ¾", 585 HP CEMENT CONCRETE.

TYPICAL SECTION

SCALE: ⅜" = 1'–0"

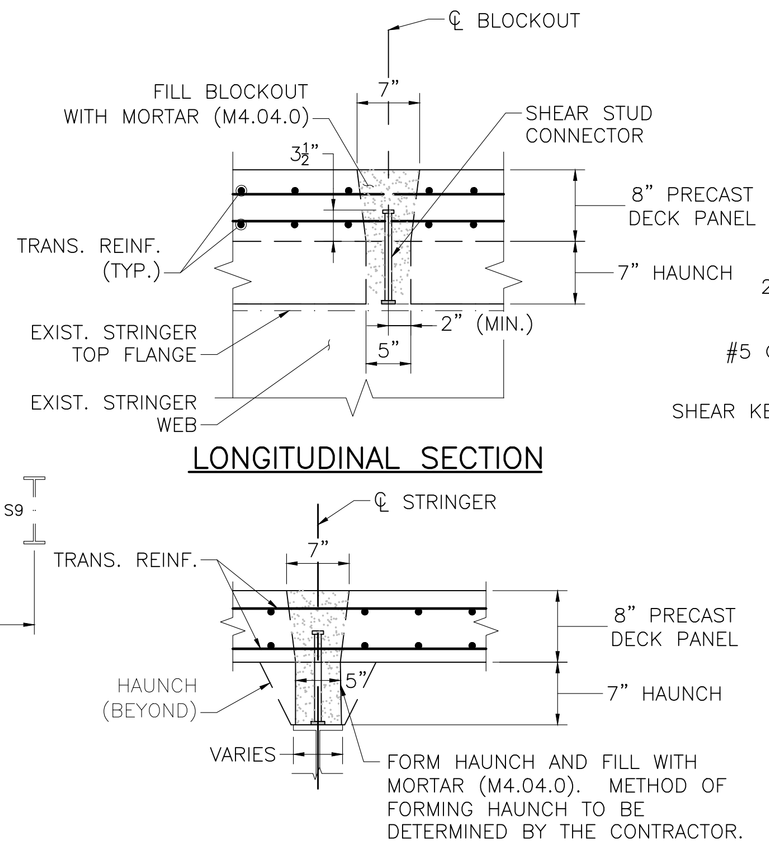

LONGITUDINAL SECTION

TRANSVERSE SECTION

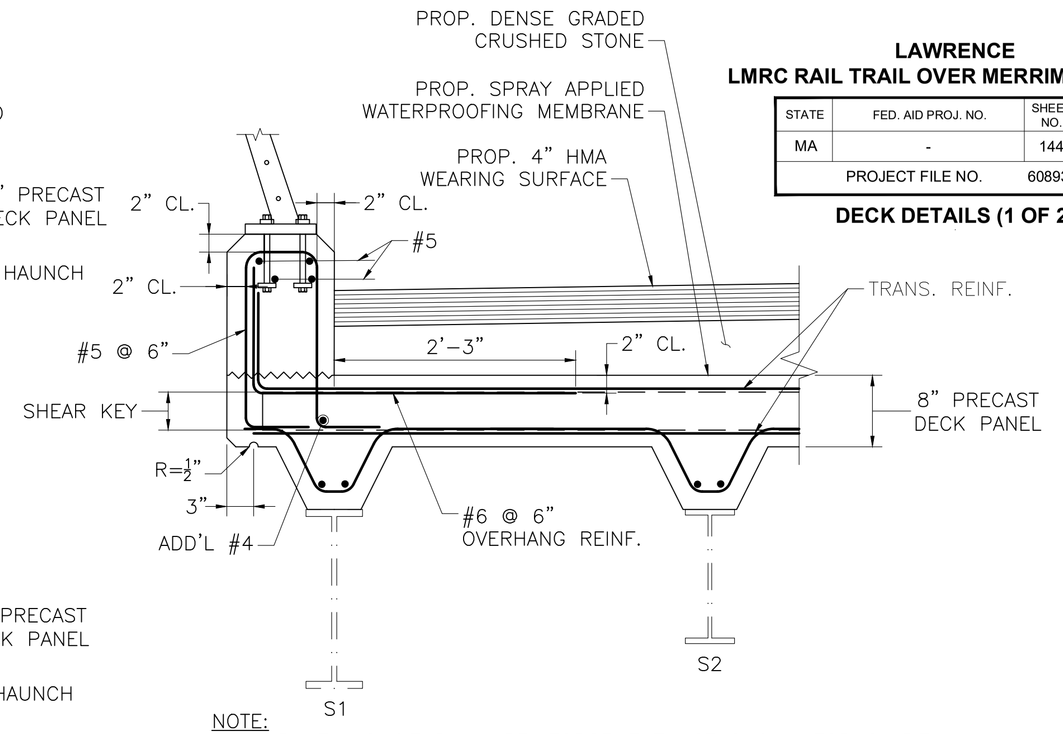

NOTE:
DECK PANEL LONGITUDINAL REINFORCEMENT NOT SHOWN FOR CLARITY.

SECTION THRU SAFETY CURB

SCALE: 1" = 1'–0"

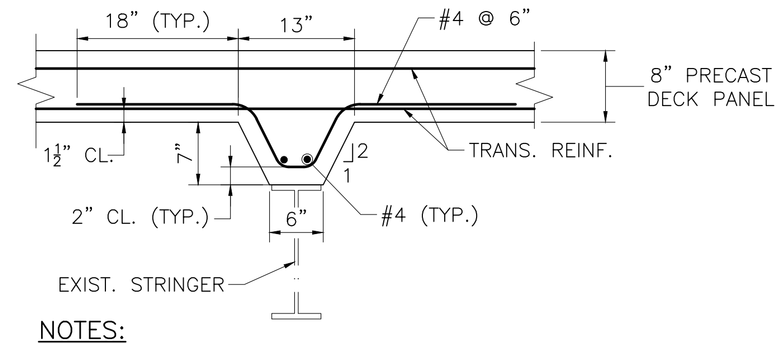

NOTES:

1. LONGITUDINAL REINFORCEMENT NOT SHOWN FOR CLARITY.
2. HAUNCH DETAIL SHOWN AT STRINGERS S2 – S7. SEE SECTION THRU SAFETY CURB DETAIL FOR HAUNCH AT STRINGERS S1 AND S8.

HAUNCH DETAIL

SCALE: 1" = 1'–0"

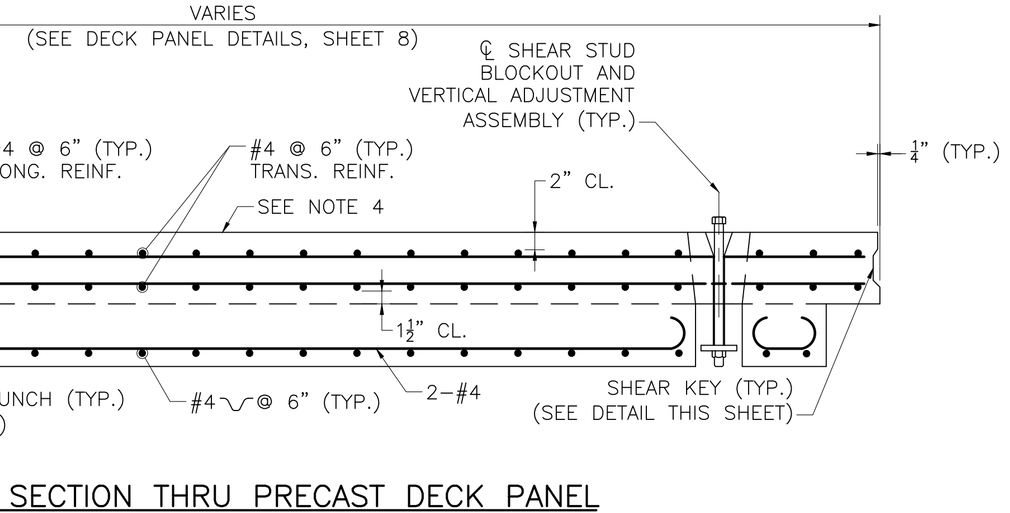

LONGITUDINAL SECTION THRU PRECAST DECK PANEL

NTS

SHEAR STUD BLOCKOUT DETAILS

SCALE: 1" = 1'–0"

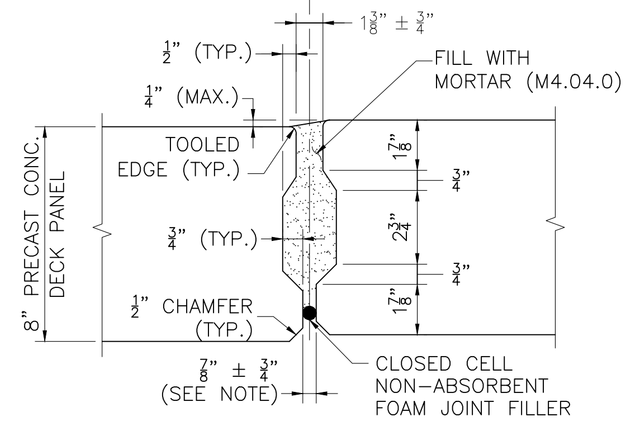

NOTE:
VARIATION IN JOINT WIDTH TO ACCOMMODATE FABRICATION TOLERANCES WHEN ERECTING PANELS.

SHEAR KEY DETAILS

SCALE: 3" = 1'–0"

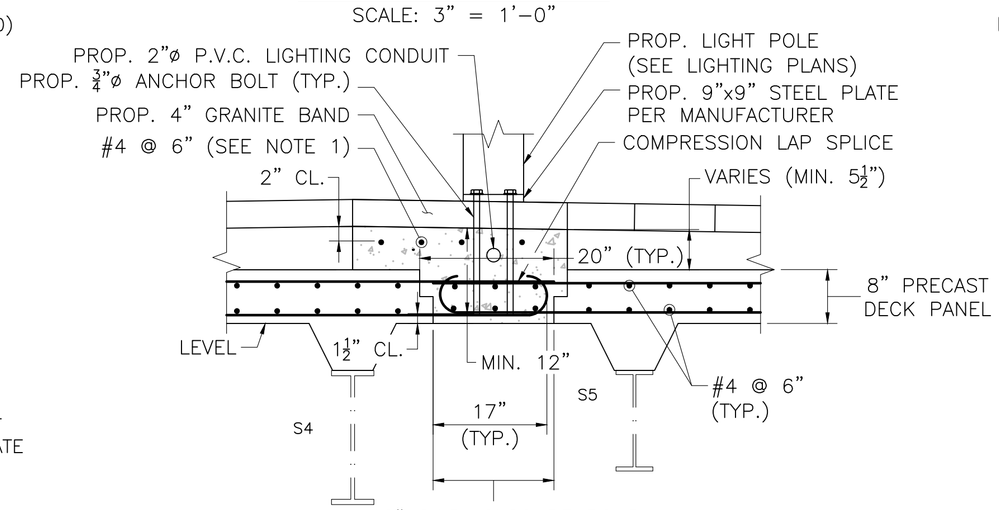

NOTE:
1. LONGITUDINAL REINFORCEMENT AT LIGHT POLE SHALL BE STAGGERED TO ALLOW ROOM FOR ANCHOR BOLTS AND CONDUIT.
2. HAUNCH REINFORCEMENT NOT SHOWN FOR CLARITY.

CAST–IN–PLACE CLOSURE POUR DETAILS

SCALE: ¾" = 1'–0"

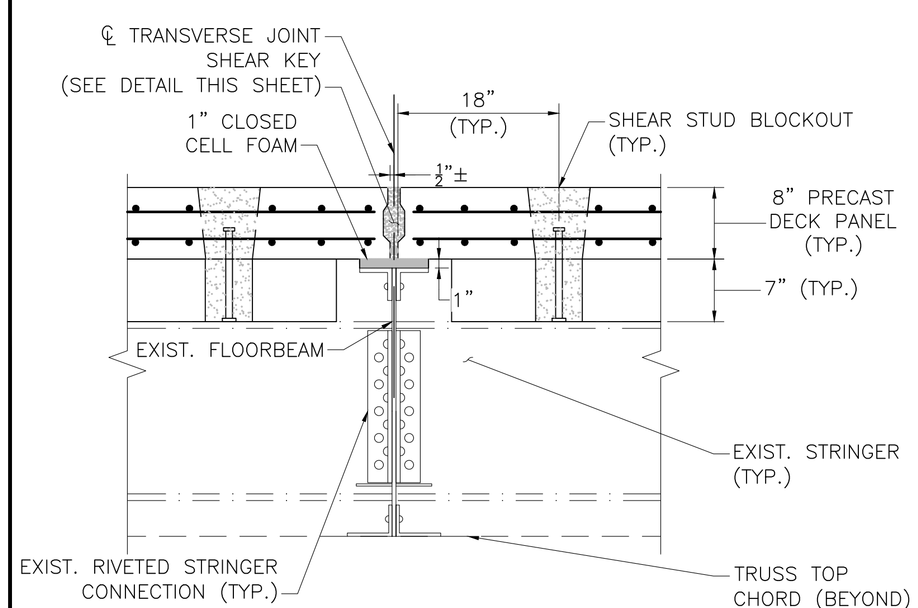

LONGITUDINAL SECTION AT FLOORBEAM

SCALE: 1" = 1'–0"

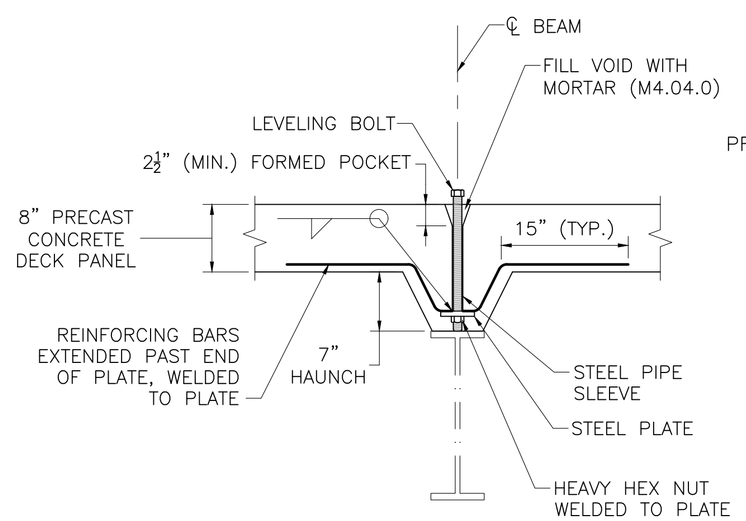

NOTE:
VERTICAL ADJUSTMENT ASSEMBLY SHALL BE DESIGNED BY THE CONTRACTOR.

VERTICAL ADJUSTMENT ASSEMBLY

SCALE: 1" = 1'–0"

PAVEMENT NOTES:

HMA BRIDGE SURFACE

SURFACE: 1½" SUPERPAVE BRIDGE SURFACE COURSE (SSC–B–9.5) OVER
2½" SUPERPAVE BRIDGE PROTECTIVE COURSE (SPC–B–9.5) OVER

BASE: VARIABLE DEPTH DENSE GRADED CRUSHED STONE
(VARIES BETWEEN APPROX. 2"–10")

PAVER SURFACE

SURFACE: 4" STONE PAVERS (SEE HIGHWAY PLANS FOR DETAILS)

BASE: VARIABLE DEPTH DENSE GRADED CRUSHED STONE
(VARIES BETWEEN APPROX. 2"–10")

PRECAST DECK PANEL NOTES:

1. PRECAST CONCRETE DECK PANELS SHALL BE 4000 PSI, ¾ IN, 585 HP CEMENT CONCRETE. SUBSTITUTIONS OF OTHER MIX DESIGNS WILL NOT BE ALLOWED.
2. LONGITUDINAL REINFORCEMENT SHALL BE PLACED PARALLEL TO THE ℄ OF CONSTRUCTION. TRANSVERSE (PRIMARY) REINFORCEMENT SHALL BE PLACED PERPENDICULAR TO THE ℄ OF CONSTRUCTION.
3. ALL REINFORCEMENT AND SUPPORT DEVICES SHALL BE EPOXY COATED.
4. THE FINISHED SURFACE OF BRIDGE DECK SHALL BE SMOOTH AND WITHOUT ANY PROJECTIONS THAT COULD PUNCTURE THE MEMBRANE WATERPROOFING OR DEPRESSIONS THAT COULD RETAIN WATER.

LAWRENCE
LMRC RAIL TRAIL OVER MERRIMACK RIVER

STATE	FED. AID PROJ. NO.	SHEET NO.	TOTAL SHEETS
MA	-	144	225
PROJECT FILE NO.	608930		

DECK DETAILS (1 OF 2)

10/28/2022	FIRST STRUCTURAL SUBMITTAL
DATE	DESCRIPTION

THIS SHEET IS APPROVED FOR CONSTRUCTION BY MASSDOT
AUTHORIZED SIGNATORY: STATE BRIDGE ENGINEER

USE ONLY PRINTS OF LATEST DATE

608930_BR7-8(L04032).DWG Plotted on 28-Oct-2022 12:23 PM
Proposal No. 608930-128034
First Structural Submittal (S1) October 28, 2022

608930_BR7-8(L04032).DWG Plotted on 28-Oct-2022 12:23 PM

LAWRENCE
LMRC RAIL TRAIL OVER MERRIMACK RIVER

STATE	FED. AID PROJ. NO.	SHEET NO.	TOTAL SHEETS
MA	-	145	225
PROJECT FILE NO.	608930		

DECK DETAILS (2 OF 2)

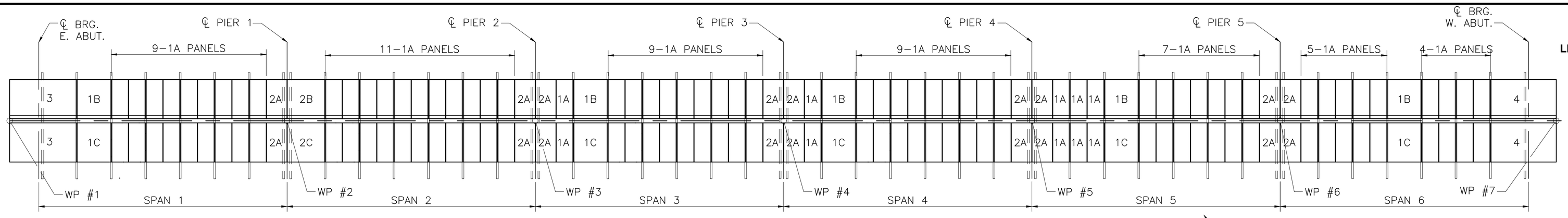

PRECAST CONCRETE DECK PANEL LAYOUT

NTS

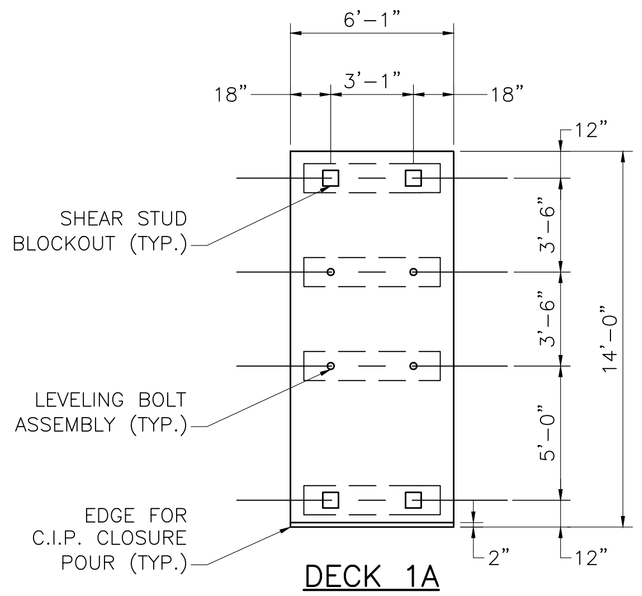

DECK 1A

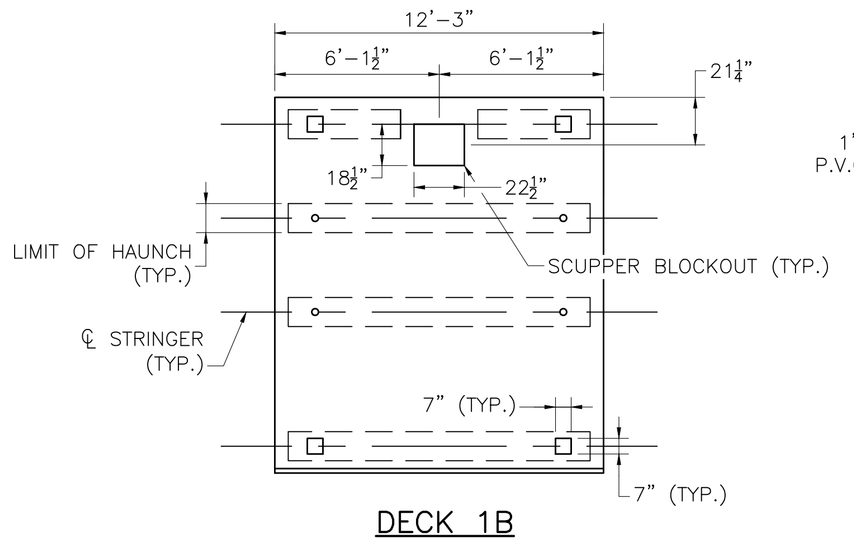

DECK 1B

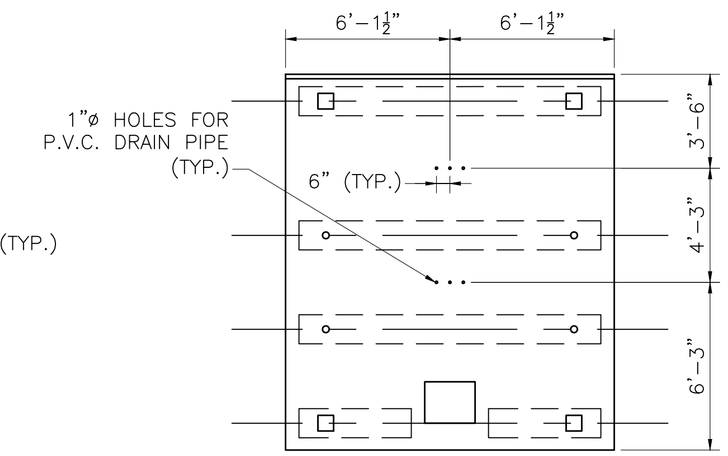

DECK 1C

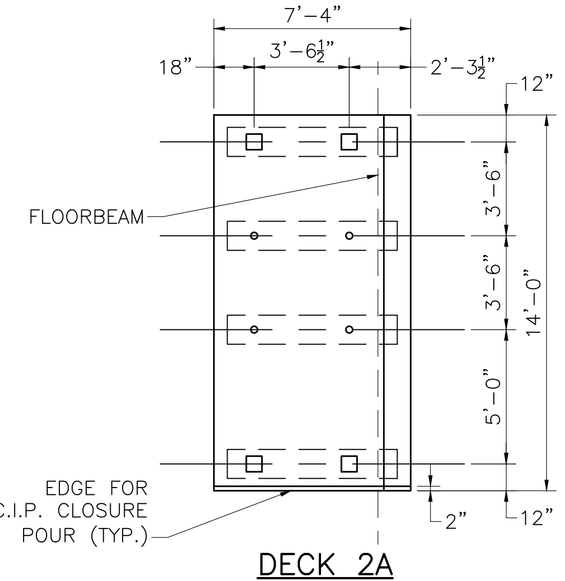

DECK 2A

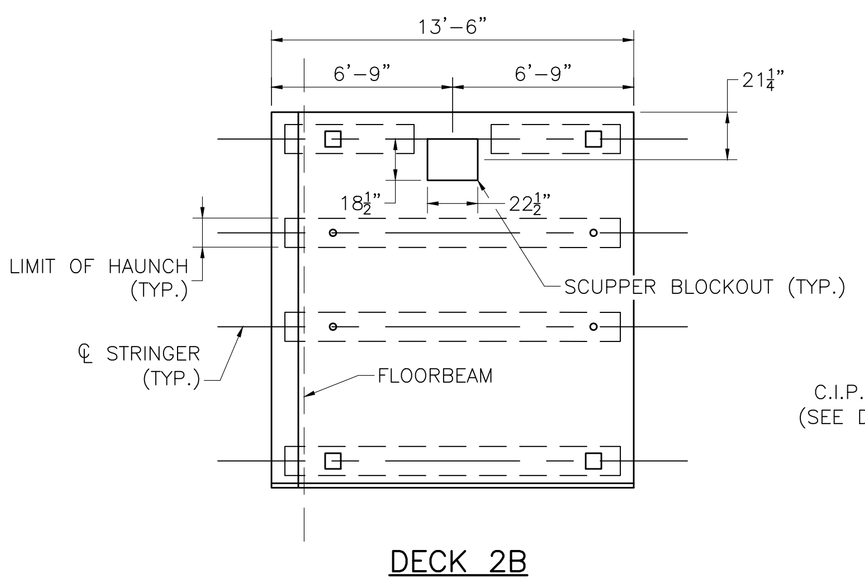

DECK 2B

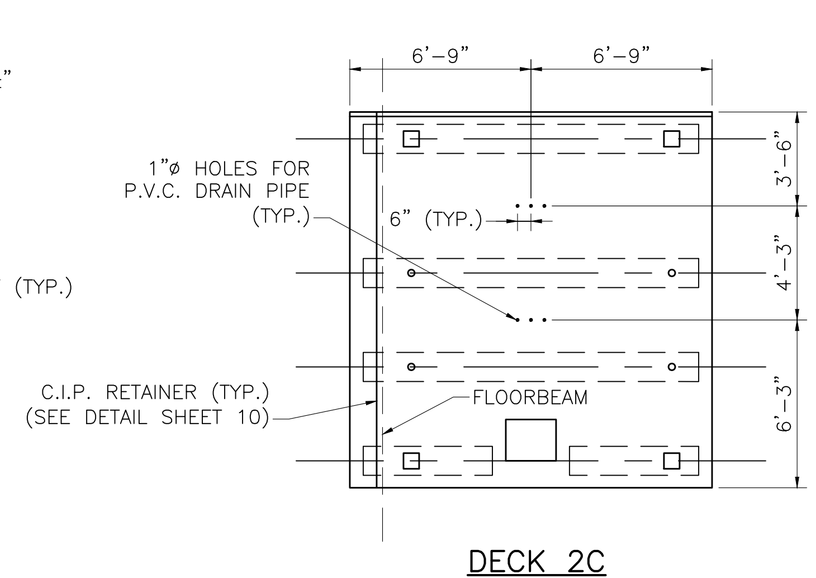

DECK 2C

PRECAST DECK PANEL SCHEDULE	
DECK	SIZE (L x W)
1A	6'–1" x 14'–0"
1B	12'–3" x 14'–0"
1C	12'–3" x 14'–0"
2A	7'–4" x 14'–0"
2B	13'–6" x 14'–0"
2C	13'–6" x 14'–0"
3	24'–0" x 14'–0"
4	23'–6" x 14'–0"

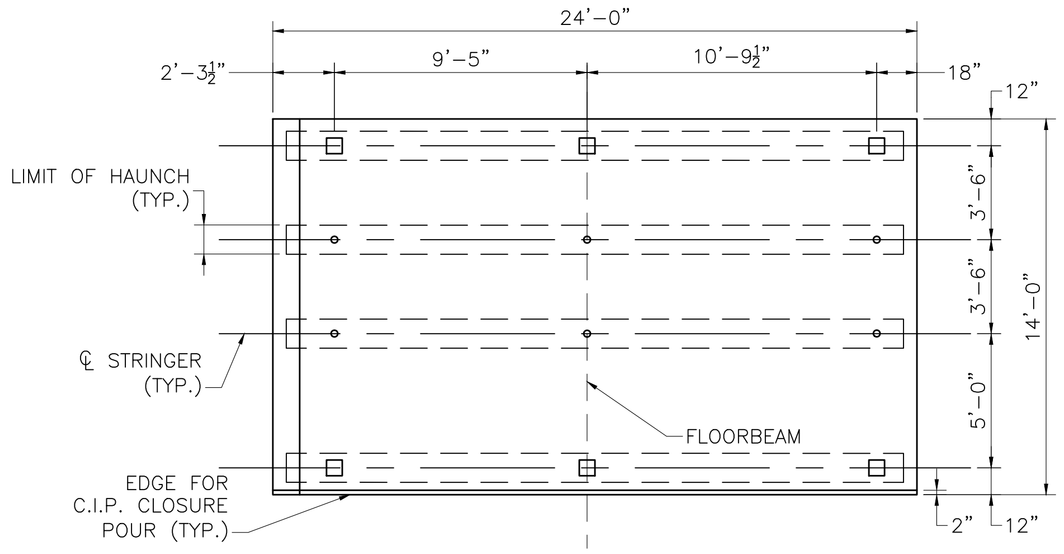

DECK 3

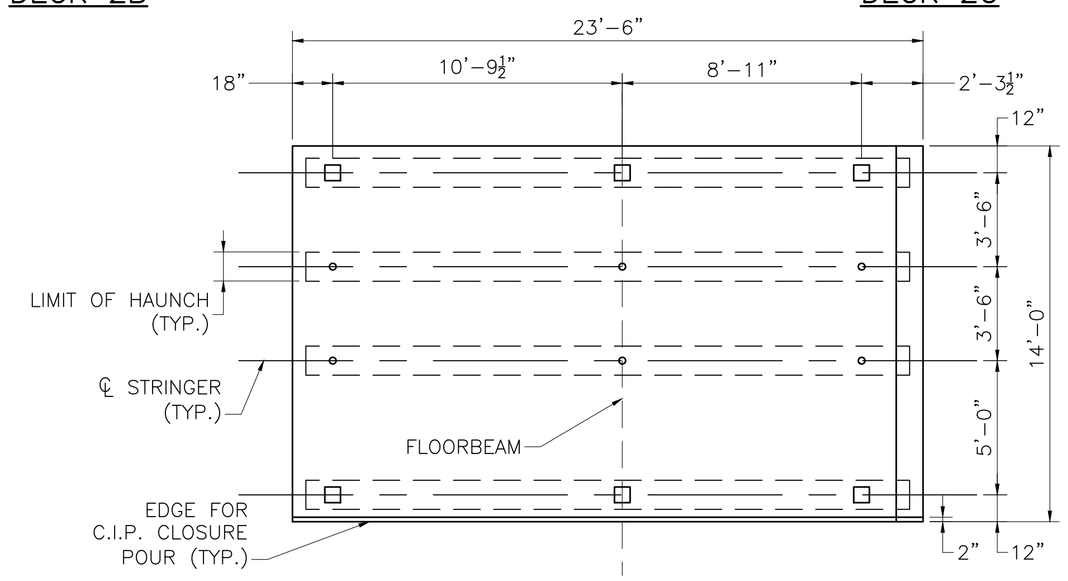

DECK 4

PRECAST DECK PANEL DETAILS

SCALE: ¼" = 1'–0"

NOTES:

1. FABRICATOR SHALL DESIGN THE LIFTING DEVICES AND SHALL DETERMINE THEIR REQUIRED NUMBER AND LOCATIONS, WHICH SHALL BE PROVIDED ON THE SHOP DRAWINGS. DESIGN CALCULATIONS OF THE LIFTING DEVICES WITH ALL SUPPORTING DESIGN INFORMATION (CHARTS, TABLES, ETC.) SHALL BE SUBMITTED TO THE ENGINEER FOR APPROVAL.
2. USE FASCIA AS WORKING LINE FOR INSTALLATION OF PRECAST CONCRETE DECK PANELS WITH THE ERECTION TOLERANCE OF ±¼".
3. DECK PANELS SHALL BE CONNECTED BY SHEAR KEYS AT FLOORBEAMS AND BY EXPANSION JOINTS AT PIERS AND ABUTMENTS. FOR EXPANSION JOINT DETAILS, SEE SHEET 10.
4. FOR C.I.P. CLOSURE POUR DETAIL, SEE SHEET 7.

10/28/2022	FIRST STRUCTURAL SUBMITTAL
DATE	DESCRIPTION

THIS SHEET IS APPROVED FOR CONSTRUCTION BY MASSDOT
AUTHORIZED SIGNATORY: STATE BRIDGE ENGINEER

USE ONLY PRINTS OF LATEST DATE

First Structural Submittal (S1) October 28, 2022

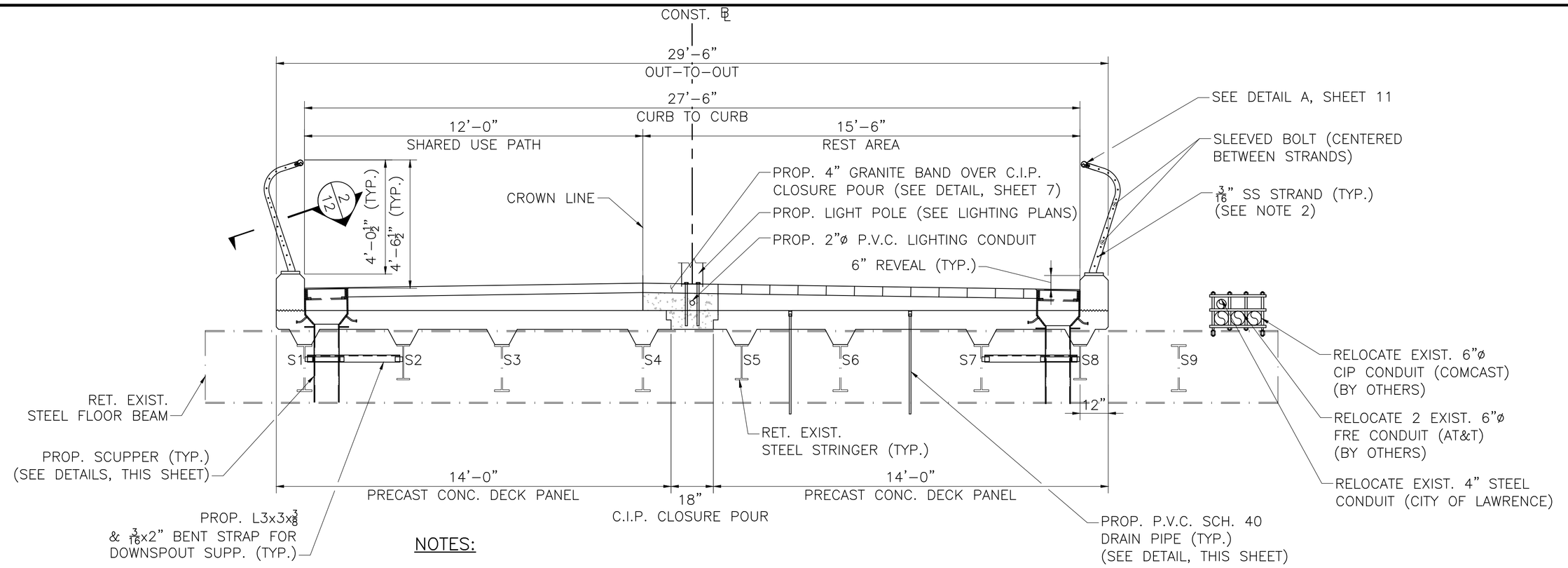

NOTES:

1. SEE SHEETS 11 & 12 FOR STEEL CABLE BRIDGE RAIL DETAILS.
2. ALL 3/16"ø SS STRANDS TO BE TYPE 316 1X19. ALL STRANDS ARE TO BE TENSIONED TO 600 POUNDS.
3. STRANDS TO BE TENSIONED USING ALL TURNBUCKLES EVENLY.
4. SEE SHEET 3 FOR UTILITY RELOCATION SEQUENCE.

SECTION 1
SCALE: 3/8" = 1'–0"

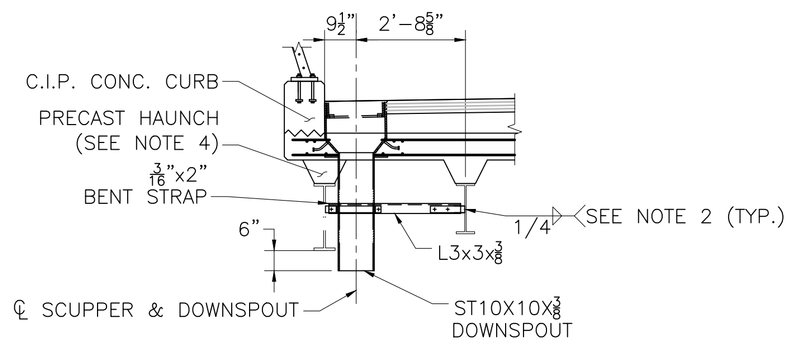

SECTION AT SAFETY CURB

NOTES:

1. ALL STEEL PLATES SHALL BE AASHTO M 270 GRADE 36 AND SQUARE TUBE SHALL BE ASTM A 500 GRADE A OR B.
2. ALL WELDS SHALL BE CONTINUOUS. ALL JOINTS SHALL BE WELDED USING TWO–SIDED ¼" FILLET WELDS OR ¼" PJP WELDS WITH A BACKING SEAL WELD, AS APPLICABLE.
3. ALL STEEL TO BE HOT–DIP GALVANIZED. 10" SQUARE TUBE TO BE GALVANIZED AND PAINTED TO MATCH COLOR OF THE STEEL GIRDERS.
4. PRECAST CONCRETE HAUNCH SHALL TERMINATE BEFORE LIMITS OF SCUPPER. SEE PRECAST DECK PANEL DETAILS SHEET 8.

SCUPPER SECTION
SCALE: 3/8" = 1'–0"

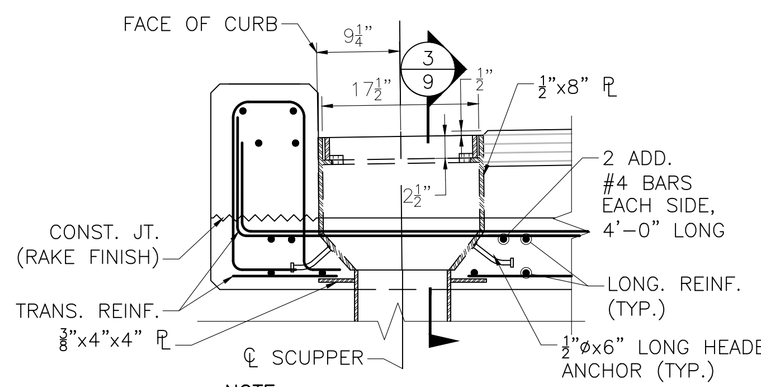

NOTE:
PRECAST HAUNCH NOT SHOWN FOR CLARITY.

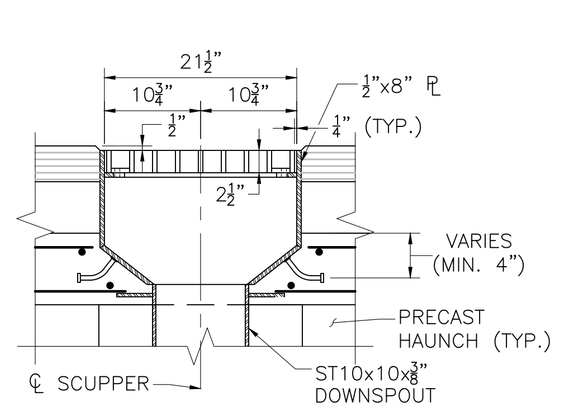

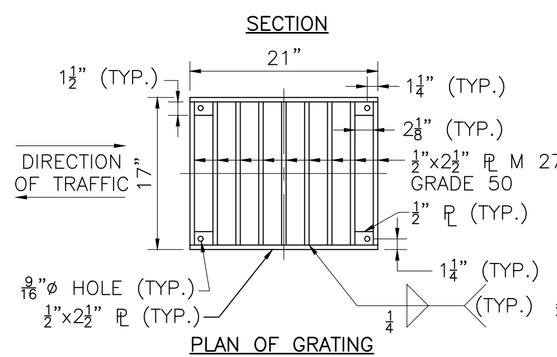

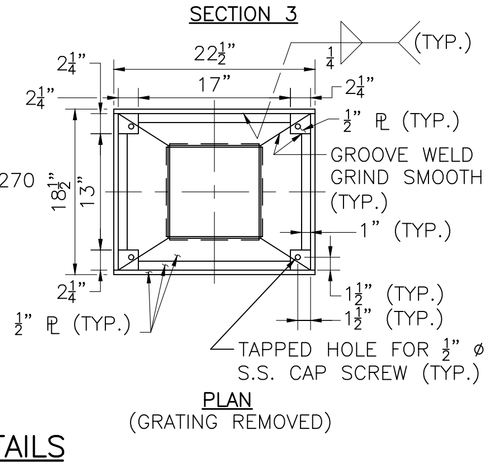

SCUPPER DETAILS
SCALE: 1" = 1'–0"

SCUPPER DETAILS
SCALE: 1" = 1'–0"

LAWRENCE
LMRC RAIL TRAIL OVER MERRIMACK RIVER

STATE	FED. AID PROJ. NO.	SHEET NO.	TOTAL SHEETS
MA	-	146	225
PROJECT FILE NO.	608930		

MISCELLANEOUS DETAILS

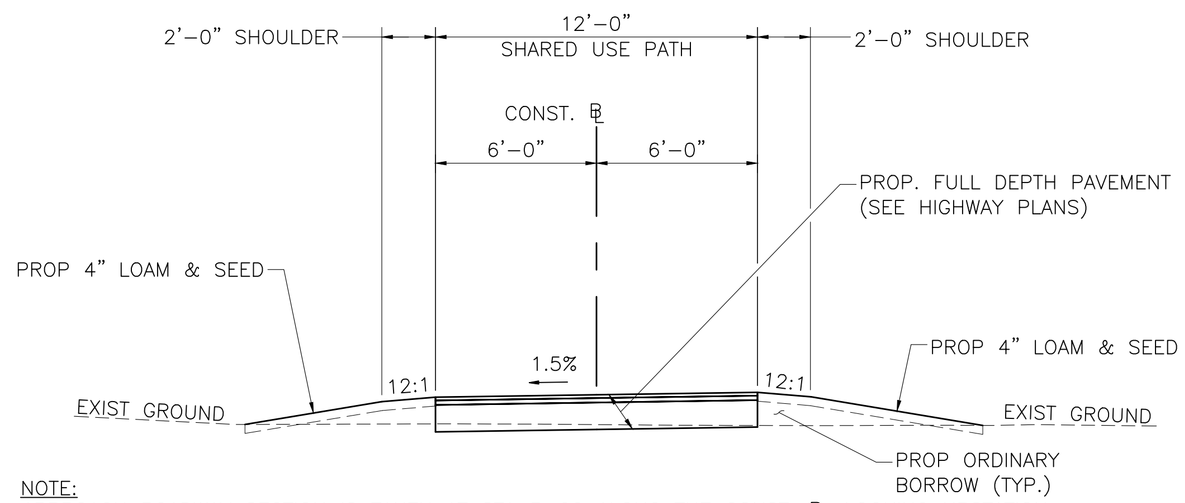

NOTE:
APPROACH ROADWAY SECTION IS TAKEN AT STA 3+00 ALONG THE CONST. ℄, LOOKING UPSTATION.

ROADWAY APPROACH SECTION
NTS

NOTE:
FOR ADD'L DRAIN PIPE DETAILS, SEE PRECAST DECK PANEL DETAILS ON SHEET 8.

DECK DRAIN PIPES
SCALE: 1" = 1'–0"

SCUPPER LOCATIONS	
STATION	OFFSET
5+27.53	13.0 LT & RT
6+03.41	13.0 LT & RT
7+05.20	13.0 LT & RT
7+94.03	13.0 LT & RT
8+95.20	13.0 LT & RT
9+96.37	13.0 LT & RT

10/28/2022	FIRST STRUCTURAL SUBMITTAL
DATE	DESCRIPTION

THIS SHEET IS APPROVED FOR CONSTRUCTION BY MASSDOT
AUTHORIZED SIGNATORY: _____ STATE BRIDGE ENGINEER
USE ONLY PRINTS OF LATEST DATE

608930_BR9-10(L04032).DWG Plotted on 28-Oct-2022 12:23 PM
Proposal No. 608930-128034
October 28, 2022
First Structural Submittal (S1)

STATE	FED. AID PROJ. NO.	SHEET NO.	TOTAL SHEETS
MA	-	147	225
PROJECT FILE NO.	608930		

EXPANSION JOINT DETAILS

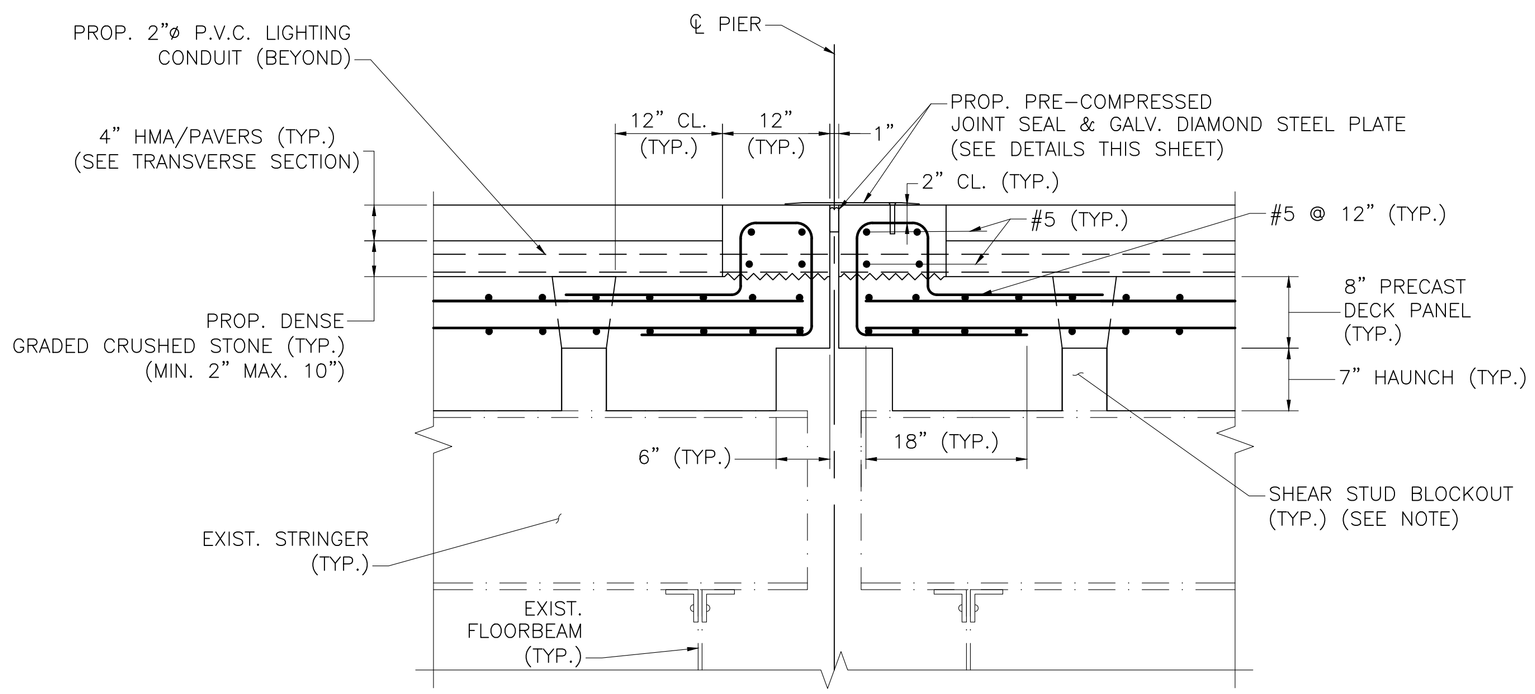

NOTE:
SHEAR CONNECTORS NOT SHOWN FOR CLARITY, SEE DETAIL SHEET 7.

LONGITUDINAL SECTION AT PIER
SCALE: 1" = 1'-0"

EXPANSION JOINT AT PIER
SCALE: 3"=1'-0"

LONGITUDINAL DETAIL AT ABUTMENT
SCALE: 3"=1'-0"

DIAMOND STEEL PLATE DETAIL
SCALE: 3"=1'-0"

10/28/2022	FIRST STRUCTURAL SUBMITTAL
DATE	DESCRIPTION

THIS SHEET IS APPROVED FOR CONSTRUCTION BY MASSDOT
AUTHORIZED SIGNATORY: _____ STATE BRIDGE ENGINEER
USE ONLY PRINTS OF LATEST DATE

608930_BR9-10(L04032).DWG Plotted on 28-Oct-2022 12:23 PM
Proposal No. 608930-128034
First Structural Submittal (S1) October 28, 2022
A00860 - 86

LAWRENCE
LMRC RAIL TRAIL OVER MERRIMACK RIVER

STATE	FED. AID PROJ. NO.	SHEET NO.	TOTAL SHEETS
MA	-	148	225
PROJECT FILE NO.	608930		

RAILING DETAILS (1 OF 2)

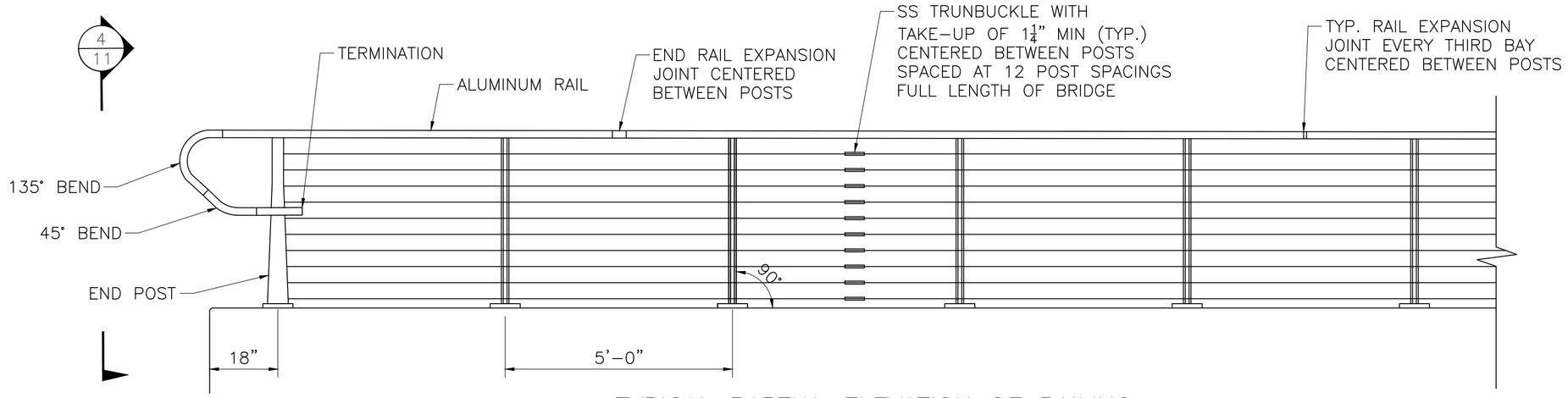

TYPICAL PARTIAL ELEVATION OF RAILING

SCALE: ½" = 1'-0"

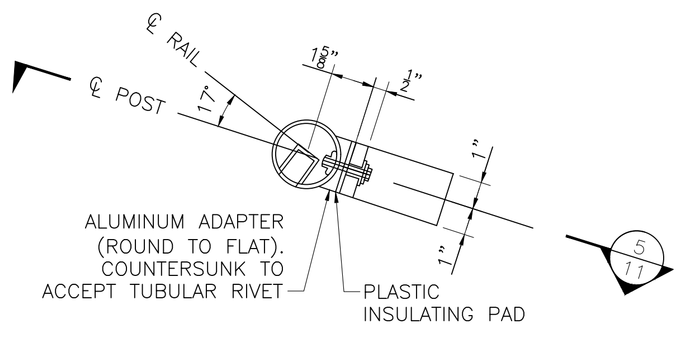

DETAIL A

SCALE: 3" = 1'-0"

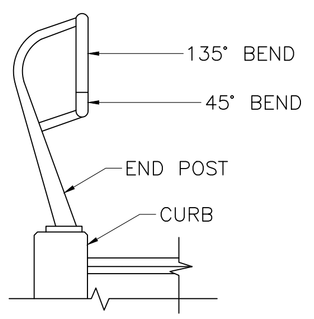

SECTION 4

SCALE: ½" = 1'-0"

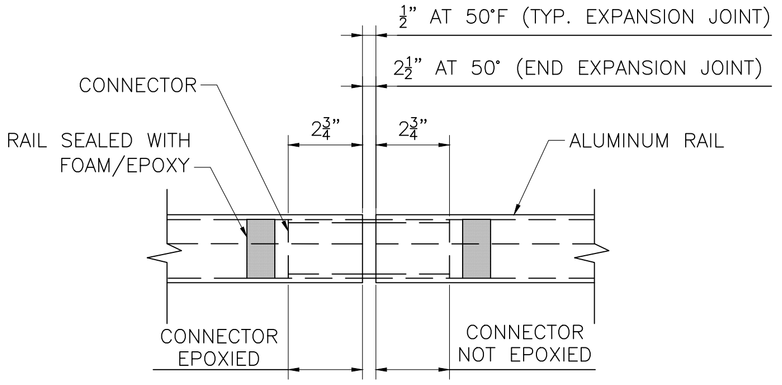

RAIL EXPANSION JOINT DETAIL

SCALE: 3" = 1'-0"

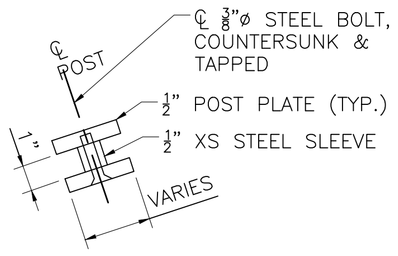

SECTION 2

SCALE: 3" = 1'-0"

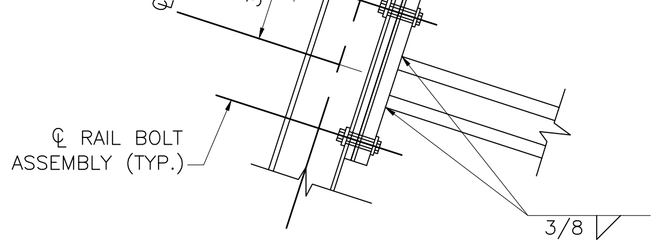

SECTION 5

SCALE: 3" = 1'-0"

RAILING ELEVATION NOTES:

1. RAIL TO BE 2½" EXTRUDED ALUMINUM GLASS RAILING TOP MOULDING.
2. SPACING SHOWN IS VALID FOR ENTIRE LENGTH OF SUPERSTRUCTURE, UNLESS OTHERWISE NOTED.
3. RAIL BOLT ASSEMBLY CONSISTS OF A ¼-20 SS BOLT, A STEEL LOCK WASHER, AN ISOLATING PLASTIC TOP HAT WASHER, AND A HEAVY DUTY ALUMINUM TUBULAR RIVET NUT.
4. ALL HOLES IN ALUMINUM RAIL TO BE DRILLED BEFORE INSTALLATION OF WIRING.
5. PROVIDE ALUMINUM END CAP AT ALL RAIL TERMINATIONS.

10/28/2022	FIRST STRUCTURAL SUBMITTAL
DATE	DESCRIPTION

THIS SHEET IS APPROVED FOR CONSTRUCTION BY MASSDOT
AUTHORIZED SIGNATORY: _____ STATE BRIDGE ENGINEER

USE ONLY PRINTS OF LATEST DATE

608930_BR11-12(L04032).DWG Plotted on 28-Oct-2022 12:23 PM
Proposal No. 608930-128034
October 28, 2022
First Structural Submittal (S1)

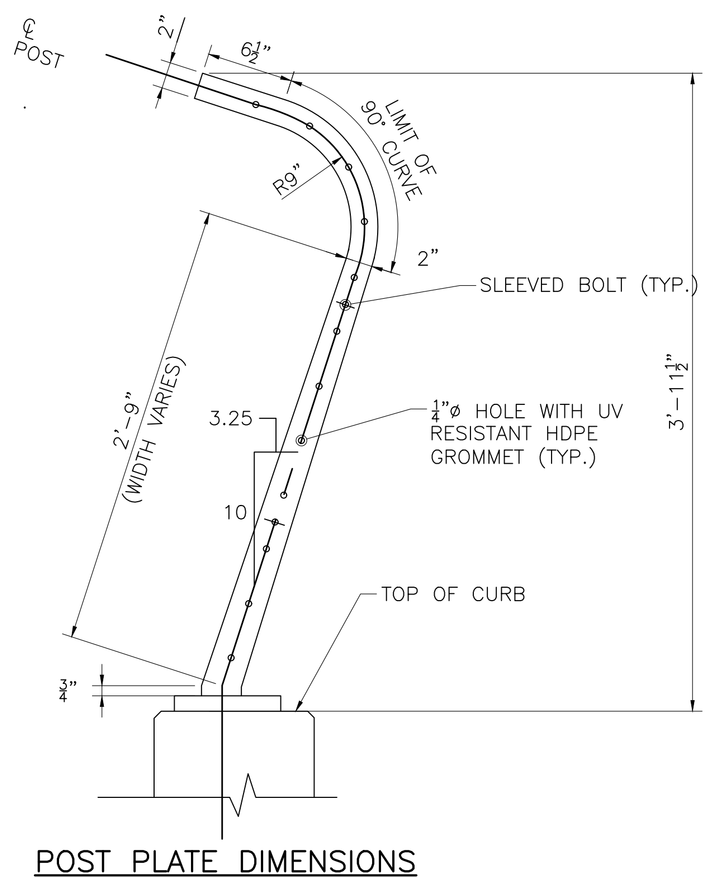

POST PLATE DIMENSIONS ON SUPERSTRUCTURE

SCALE: 1½" = 1'-0"

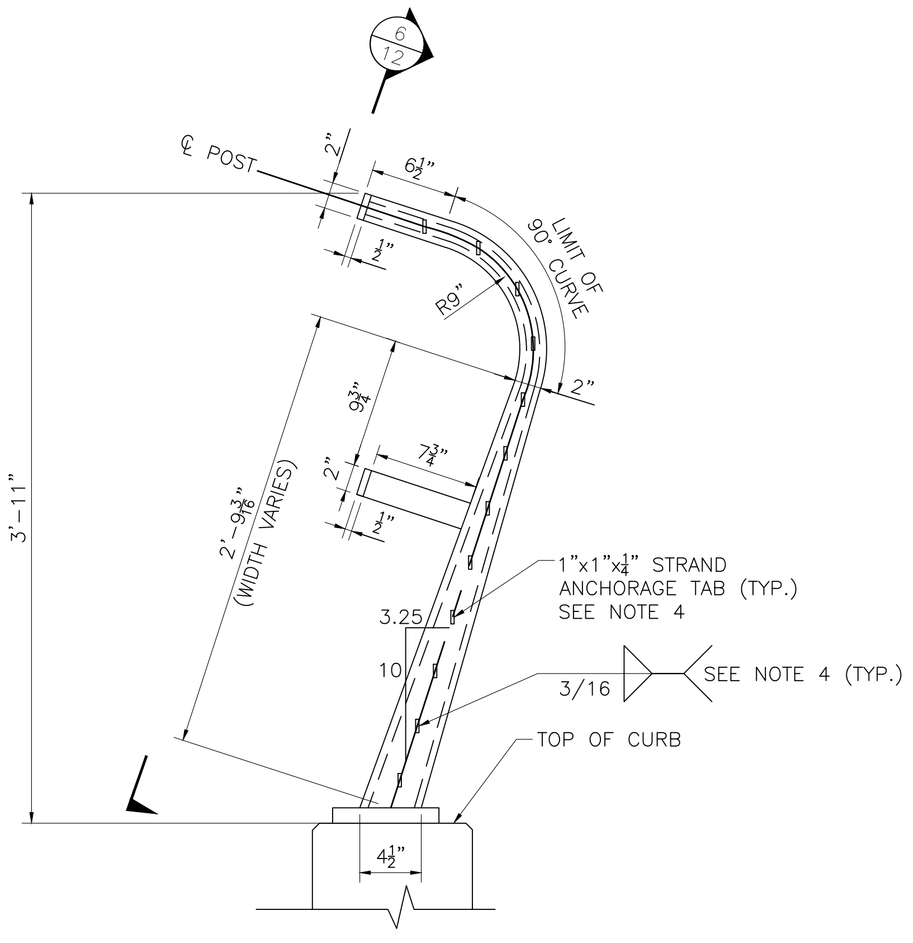

END POST DIMENSIONS

SCALE: 1½" = 1'-0"

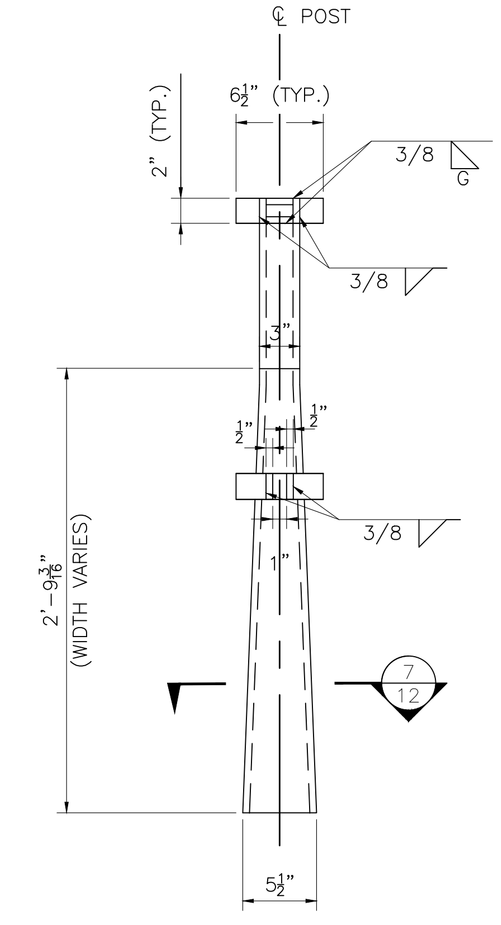

SECTION 6

SCALE: 1½" = 1'-0"

LAWRENCE
LMRC RAIL TRAIL OVER MERRIMACK RIVER

STATE	FED. AID PROJ. NO.	SHEET NO.	TOTAL SHEETS
MA	-	149	225
PROJECT FILE NO.	608930		

RAILING DETAILS (2 OF 2)

NOTES:
1. FOR STRAND SPACING, SEE SHEET 9.
2. FOR SLEEVED BOLT LOCATIONS, SEE SHEET 9.
3. STRAND ANCHORAGE TAB DATA SHOWN MAY BE ADJUSTED WITH ENGINEER'S APPROVAL IF NECESSARY TO COORDINATE WITH STRAND FITTINGS. TABS TO BE ORIENTED VERTICALLY AND SPACED WITH STRANDS. TABS TO BE PLACED ONLY ON BRIDGE SIDE OF A GIVEN ENDPOST.
4. FOR RAILING MOUNTING DETAILS, SEE SHEET 11.

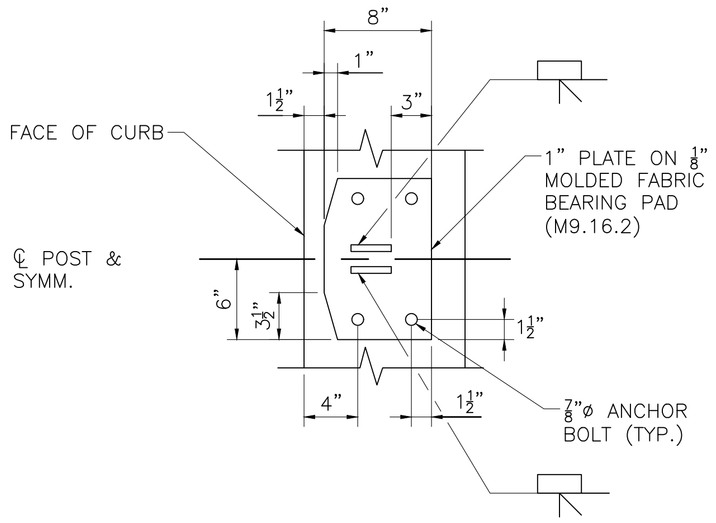

TYPICAL POST BASE PLATE PLAN

SCALE: 1½" = 1'-0"

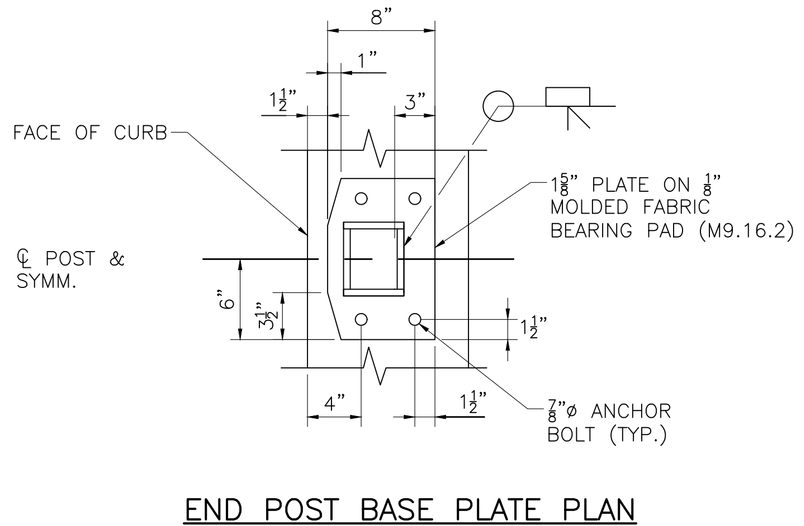

END POST BASE PLATE PLAN

SCALE: 1½" = 1'-0"

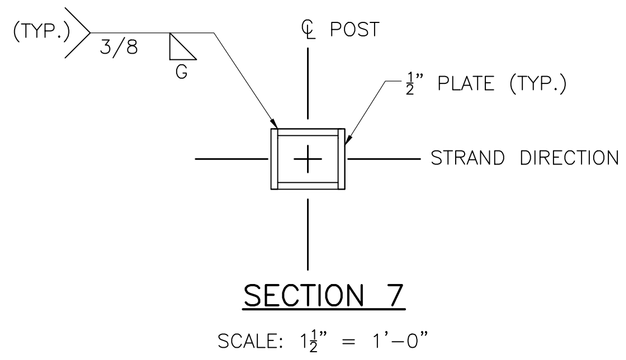

SECTION 7

SCALE: 1½" = 1'-0"

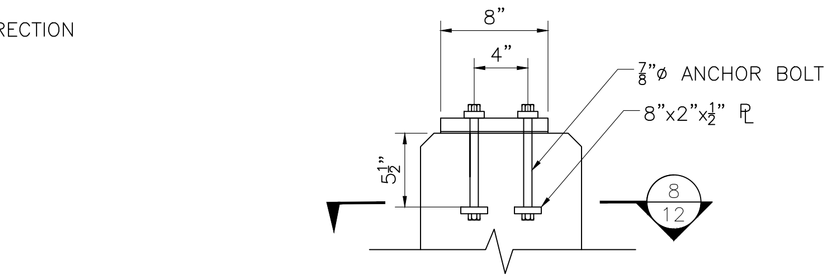

ANCHOR BOLT DETAIL

SCALE: 1½" = 1'-0"

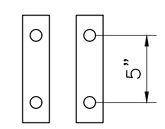

SECTION 8

SCALE: 1½" = 1'-0"

10/28/2022	FIRST STRUCTURAL SUBMITTAL
DATE	DESCRIPTION

THIS SHEET IS APPROVED FOR CONSTRUCTION BY MASSDOT
AUTHORIZED SIGNATORY: _____ STATE BRIDGE ENGINEER

USE ONLY PRINTS OF LATEST DATE

SHEET 12 OF 12 SHEETS BRIDGE NO. L-04-032 (C82)

608930_BR11-12(L04032).DWG Plotted on 28-Oct-2022 12:23 PM
Proposal No. 608930-128034
First Structural Submittal (S1) October 28, 2022
A00860 - 88

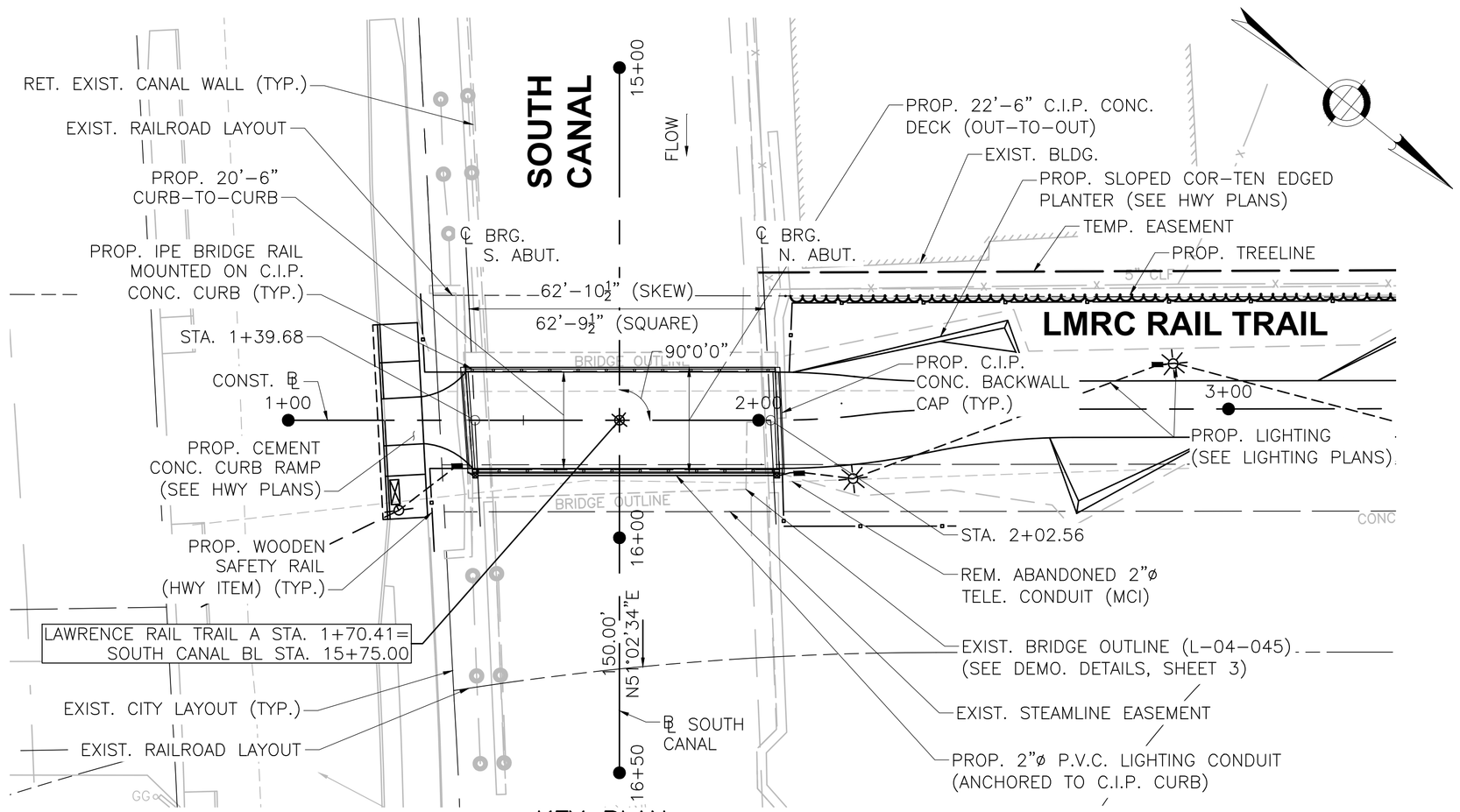

KEY PLAN
SCALE: 1"=20'

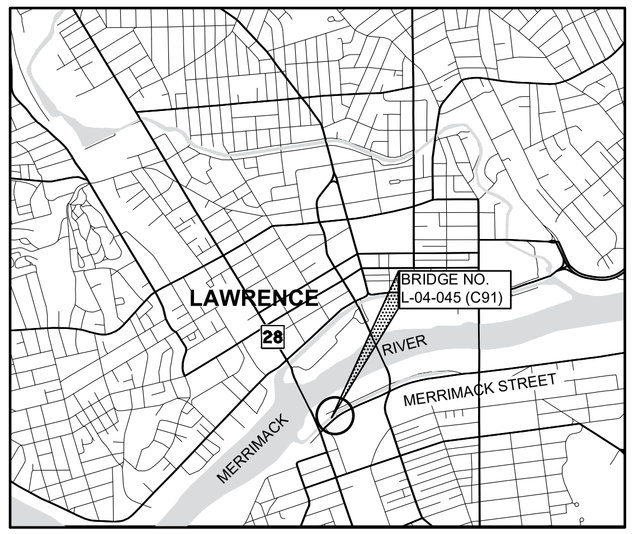

LOCUS MAP
SCALE: 1"=2000'

LAWRENCE
LMRC RAIL TRAIL OVER SOUTH CANAL

STATE	FED. AID PROJ. NO.	SHEET NO.	TOTAL SHEETS
MA	-	150	225
PROJECT FILE NO.		608930	

KEY PLAN, PROFILES, LOCUS, AND INDEX

INDEX OF SHEETS

SHEET NO.	DESCRIPTION
1	KEY PLAN, PROFILES, LOCUS, AND INDEX
2	GENERAL NOTES
3	PLAN AND ELEVATION
4	SUPERSTRUCTURE DETAILS (1 OF 2)
5	SUPERSTRUCTURE DETAILS (2 OF 2)
6	RAILING DETAILS

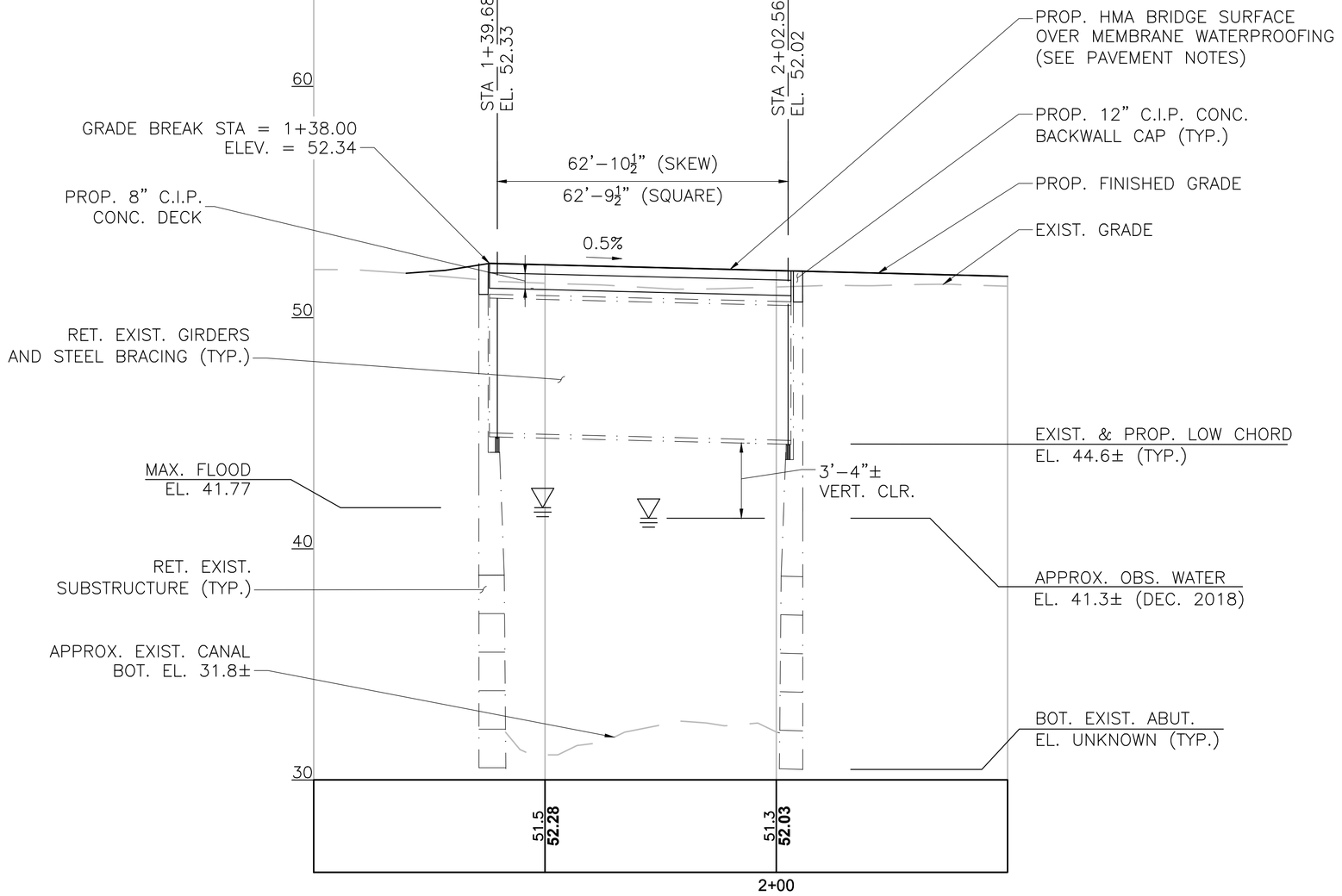

LMRC RAIL TRAIL PROFILE
HORIZONTAL SCALE: 1" = 20'
VERTICAL SCALE" 1" = 4'

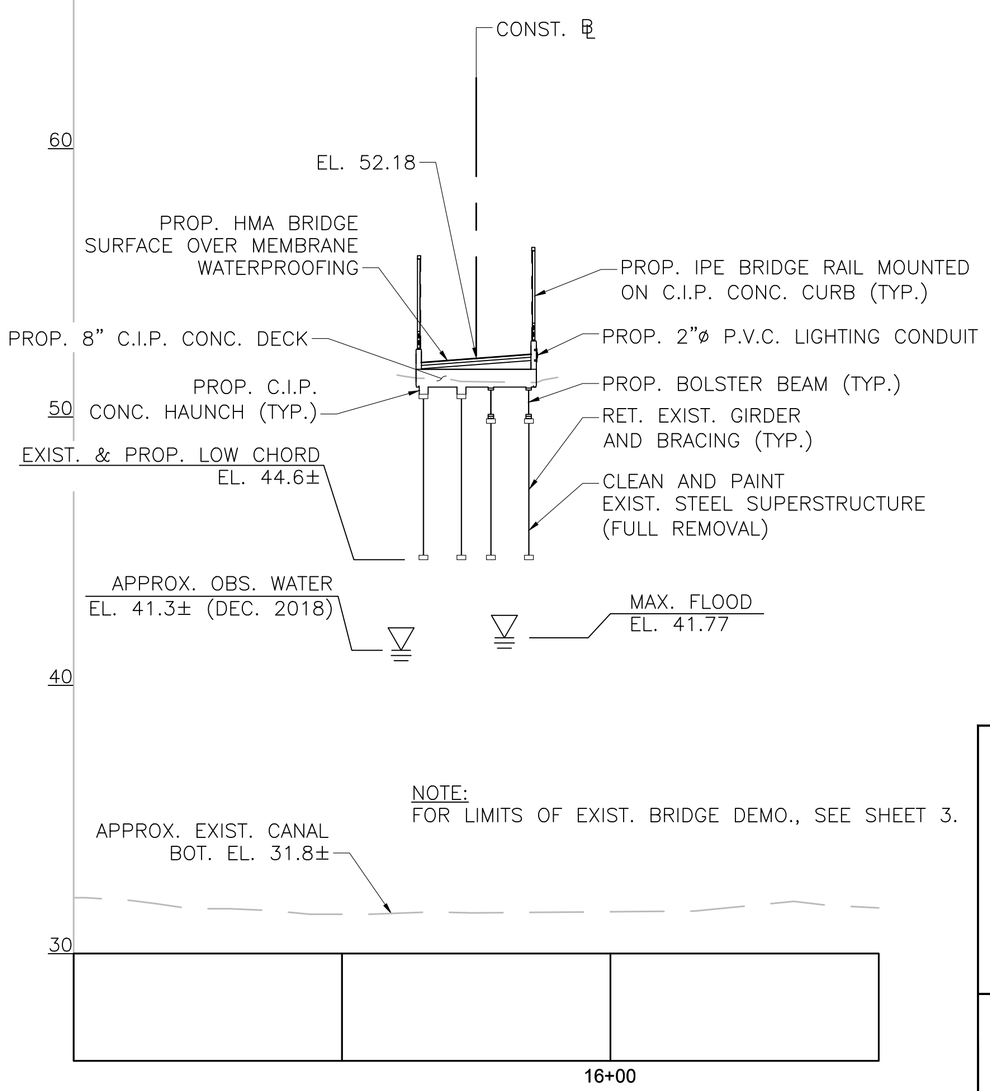

SOUTH CANAL PROFILE
HORIZONTAL SCALE: 1" = 20'
VERTICAL SCALE" 1" = 4'

10/28/2022	FIRST STRUCTURAL SUBMITTAL

MassDOT Massachusetts Department of Transportation Highway Division

PROPOSED BRIDGE REHABILITATION
LAWRENCE
LMRC RAIL TRAIL
OVER SOUTH CANAL

MASSACHUSETTS DEPARTMENT OF TRANSPORTATION
HIGHWAY DIVISION
10 PARK PLAZA BOSTON, MASS

TEC The Engineering Corp
282 Merrimack Street, Second Floor
Lawrence, MA 01843
978-794-1792

STATE BRIDGE ENGINEER

CHIEF ENGINEER

SHEET 1 OF 6 SHEETS BRIDGE NO. L-04-045 (C91)

608930_BR1(L04045).DWG Plotted on 28-Oct-2022 2:12 PM

Proposal No. 608930-128034

October 28, 2022

First Structural Submittal (S1)

A008608 - 88

STATE	FED. AID PROJ. NO.	SHEET NO.	TOTAL SHEETS
MA	-	151	225
PROJECT FILE NO.	608930		

GENERAL NOTES

DESIGN:

IN ACCORDANCE WITH THE 2020 AMERICAN ASSOCIATION OF STATE HIGHWAY TRANSPORTATION OFFICIALS (AASHTO) LRFD BRIDGE DESIGN SPECIFICATION, 9TH EDITION FOR H10 VEHICULAR LOADING AND 90 PSF PEDESTRIAN LOADING.

MASSDOT BENCHMARKS:

BENCHMARK 1: MAG NAIL (42)
N: 3080300.036
E: 746593.348
ELEVATION= 52.01'

BENCHMARK 2: MAG NAIL (41)
N: 3080446.799
E: 746438.265
ELEVATION= 51.35'

ELEVATIONS ARE BASED ON THE NORTH AMERICAN VERTICAL DATUM (NAVD) OF 1988.

SCALES:

SCALES NOTED ON THE PLANS ARE NOT APPLICABLE TO REDUCED SIZE PRINTS. DIVIDE SCALES BY 2 FOR HALF–SIZE PRINTS (A3).

FOUNDATIONS:

FOUNDATIONS MAY BE ALTERED, IF NECESSARY TO SUIT CONDITIONS ENCOUNTERED DURING CONSTRUCTION, WITH THE APPROVAL OF THE ENGINEER.

UNSUITABLE MATERIAL:

ALL UNSUITABLE MATERIAL SHALL BE REMOVED WITHIN THE LIMITS OF THE FOUNDATIONS OF THE STRUCTURE, AS DIRECTED BY THE ENGINEER.

ANCHOR BOLTS:

ALL ANCHOR BOLTS SHALL BE SET BY TEMPLATE BEFORE THE CONCRETE IS PLACED.

CONCRETE:

ALL CONCRETE SHALL BE 4000 PSI, ¾", 585 HP CEMENT CONCRETE.

REINFORCEMENT:

ALL REINFORCING STEEL SHALL BE EPOXY COATED.

REINFORCING STEEL SHALL CONFORM TO THE REQUIREMENTS OF AASHTO M 31 GRADE 60. UNLESS OTHERWISE NOTED ON THE CONSTRUCTION DRAWINGS, ALL BARS SHALL BE LAPPED AS FOLLOWS:

MODIFICATION CONDITION:	#4 BARS	#5 BARS	#6 BARS
1. NONE	16"	19"	23"
2. 12" OF CONCRETE BELOW BAR	20"	25"	30"
3. EPOXY COATED BARS, COVER < 3db, OR CLEAR SPACING < 6db	23"	29"	34"
4. COATED BARS, ALL OTHER CASES	18"	23"	27"
5. CONDITION 2. AND 3.	26"	32"	39"
6. CONDITION 2. AND 4.	24"	30"	36"

ALL OTHER BARS SHALL BE LAPPED AS SHOWN ON THE CONSTRUCTION DRAWINGS.

MEMBRANE WATERPROOFING:

ALL MEMBRANE WATERPROOFING USED ON BRIDGE DECKS SHALL BE MEMBRANE WATERPROOFING FOR BRIDGE DECKS – SPRAY APPLIED.

STRUCTURAL STEEL

ALL STRUCTURAL STEEL SHALL CONFORM TO THE REQUIREMENTS OF AASHTO M 270, GRADE 36 AND SHALL BE HOT–DIP GALVANIZED, EXCEPT AS NOTED. ALL BOLTS SHALL BE ASTM 3125. DIAMETERS AS SHOWN ON PLANS. ALL BOLT HOLES SHALL BE $\frac{1}{16}$" LARGER THAN BOLTS. ALL BOLTED CONNECTIONS SHALL BE CONSIDERED SLIP CRITICAL WITH CLASS C FAYING SURFACES.

UTILITIES:

DURING CONSTRUCTION, THE CONTRACTOR SHALL LOCATE AND PROTECT FROM DAMAGE ALL UTILITIES THAT ARE TO REMAIN IN PLACE.

GEOTECHNICAL:

NO GEOTECHNICAL TESTING WAS PERFORMED AT THIS LOCATION.

LUMBER:

LUMBER FOR HAND RAILS, RAIL CAPS, AND RAIL POSTS SHALL BE IPE.

MINIMUM DESIGN VALUES FOR IPE			
SIZE	BENDING Fb (PSI)	CRUSHING STRENGTH (PSI)	MODULUS OF ELASTICITY E (PSI)
ALL	22,500	10,000	2,900,000

IPE TIMBER SHALL BE FINISHED WITH A PRESERVATIVE OIL COATING.

EXISTING CONDITIONS:

1. NO AS–BUILT PLANS ARE AVAILABLE FOR THIS STRUCTURE.
2. CONTRACTOR TO FIELD VERIFY ALL GRADES AND DIMENSIONS.

ESTIMATED QUANTITIES
(NOT GUARANTEED)

ITEM DESCRIPTION	QUANTITY	UNITS
PARTIAL DEMOLITION OF SUPERSTRUCTURE OF BRIDGE NO. L–04–045 (C91).....	1	LS
SUPERPAVE BRIDGE SURFACE COURSE – 9.5 (SSC–B–9.5).....	40	TON
SUPERPAVE BRIDGE PROTECTIVE COURSE – 9.5 (SSC–B – 9.5).....	20	TON
CLEAN AND PAINT (FULL REMOVAL) STEEL BRIDGE NO. L–04–045 (C91).....	1	LS
ALTERATION TO BRIDGE STRUCTURE NO. L–04–045 (C91).....	1	LS
TEMPORARY PROTECTIVE SHIELDING BRIDGE NO. L–04–045 (C91).....	1	LS

10/28/2022	FIRST STRUCTURAL SUBMITTAL
DATE	DESCRIPTION

THIS SHEET IS APPROVED FOR CONSTRUCTION BY MASSDOT
AUTHORIZED SIGNATORY: _____ STATE BRIDGE ENGINEER
USE ONLY PRINTS OF LATEST DATE

608930_BR2(L04045).DWG Plotted on 28-Oct-2022 2:12 PM
Proposal No. 608930-128034
October 28, 2022
First Structural Submittal (S1)
A00860 - 90

LAWRENCE
LMRC RAIL TRAIL OVER SOUTH CANAL

STATE	FED. AID PROJ. NO.	SHEET NO.	TOTAL SHEETS
MA	-	152	225
PROJECT FILE NO.		608930	

PLAN AND ELEVATION

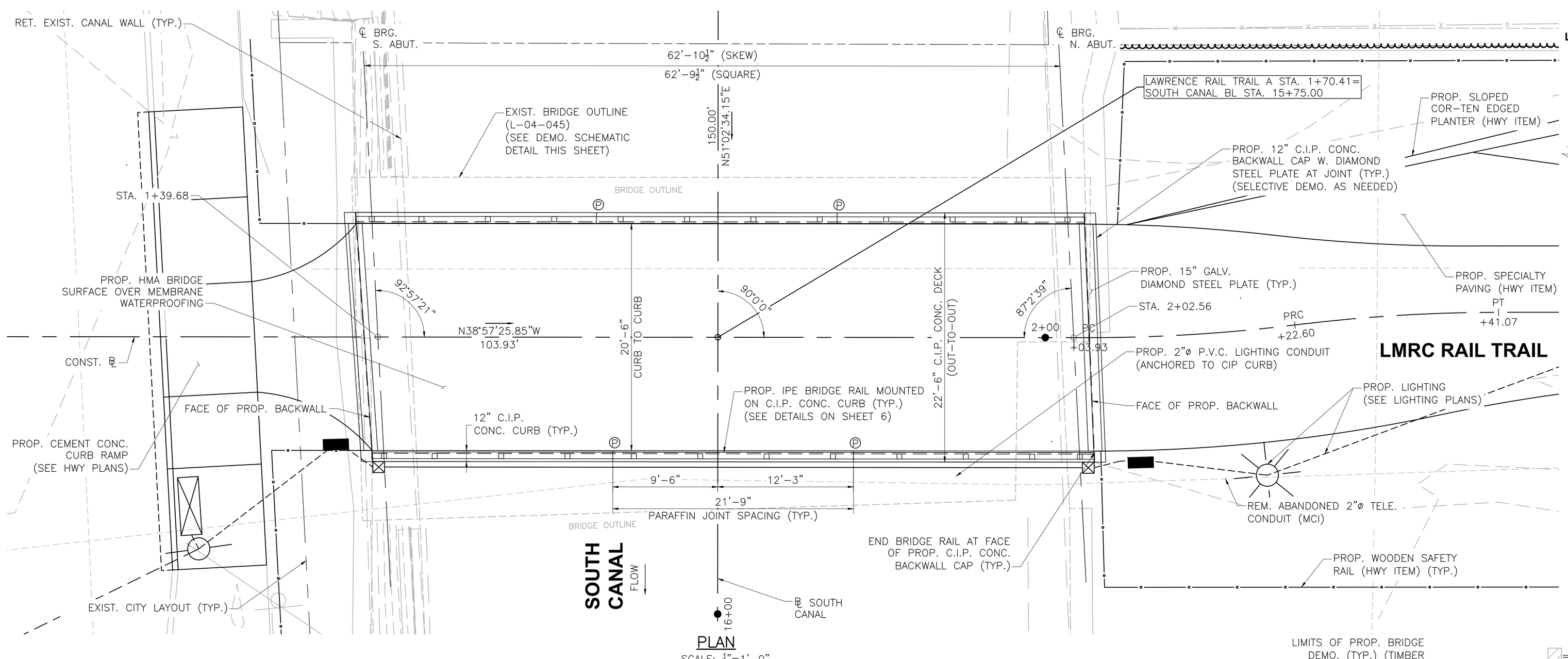

PLAN
SCALE: 1/5"=1'-0"

LEGEND:
Ⓟ PROPOSED PARAFFIN JOINT

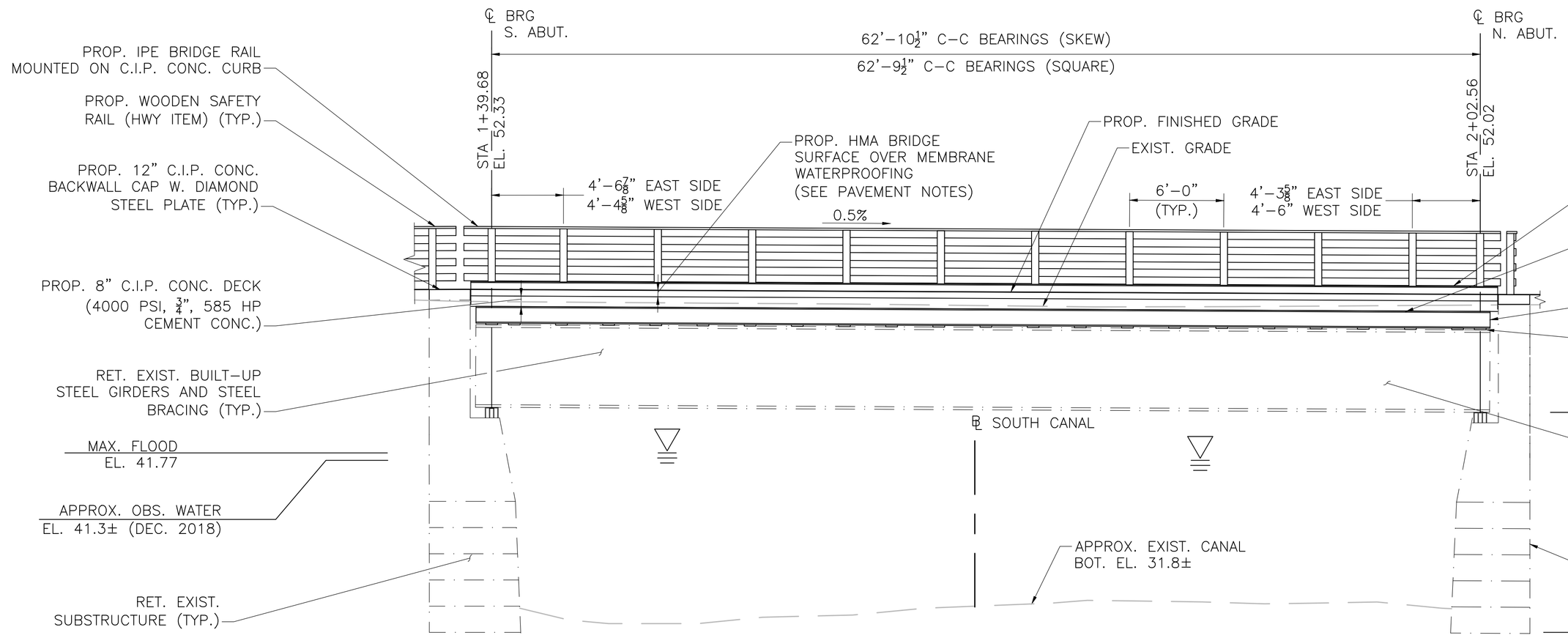

EAST ELEVATION
SCALE: 1/5"=1'-0"

NOTE: PROPOSED LIGHTING CONDUIT NOT SHOWN FOR CLARITY.

LIMITS OF PROP. BRIDGE DEMO. (TYP.) (TIMBER SIDEWALK, RAILINGS, CURBS, RR TIES, OVERHANG BRACING)

▨ = LIMITS OF DEMOLITION

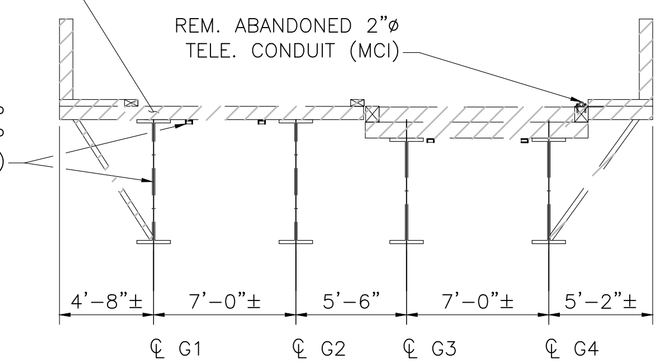

DEMOLITION SCHEMATIC
NTS

10/28/2022	FIRST STRUCTURAL SUBMITTAL
DATE	DESCRIPTION

THIS SHEET IS APPROVED FOR CONSTRUCTION BY MASSDOT
AUTHORIZED SIGNATORY: _____ STATE BRIDGE ENGINEER
USE ONLY PRINTS OF LATEST DATE

608930_BR3(L04045).DWG Plotted on 28-Oct-2022 2:13 PM
Proposal No. 608930-128034
First Structural Submittal (S1) October 28, 2022

STATE	FED. AID PROJ. NO.	SHEET NO.	TOTAL SHEETS
MA	-	153	225
PROJECT FILE NO.	608930		

SUPERSTRUCTURE DETAILS (1 OF 2)

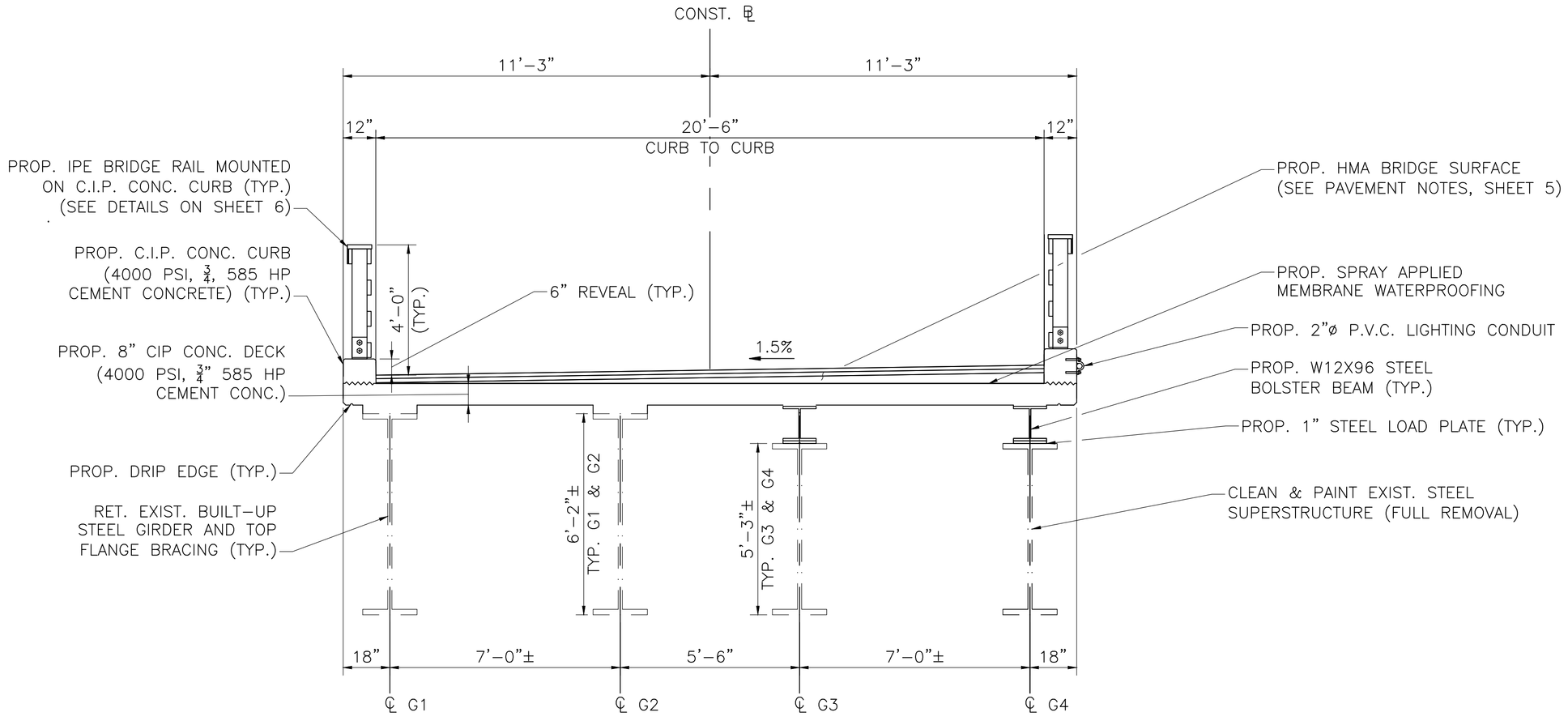

TYPICAL SECTION
SCALE: ⅜" = 1'–0"

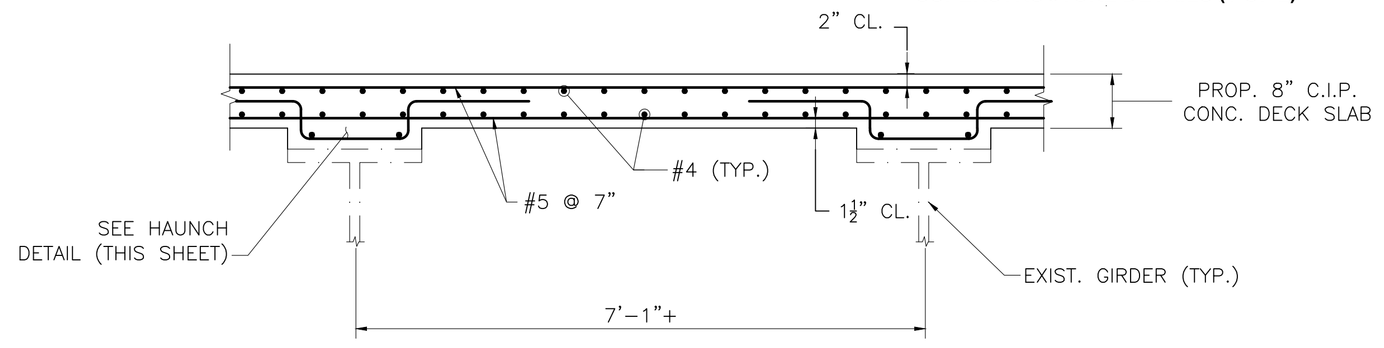

NOTES:

1. DECK SLAB SHALL BE 4000 PSI, ¾ IN, 585 HP CEMENT CONCRETE.
2. LONGITUDINAL REINFORCEMENT SHALL BE PLACED PARALLEL TO THE ℄ OF CONSTRUCTION.

   TRANSVERSE (PRIMARY) REINFORCEMENT SHALL BE PLACED PERPENDICULAR TO THE ℄ OF CONSTRUCTION.
3. ALL REINFORCEMENT AND SUPPORT DEVICES SHALL BE COATED.
4. THE FINISHED SURFACE OF BRIDGE DECK SHALL BE SMOOTH AND WITHOUT ANY PROJECTIONS THAT COULD PUNCTURE THE MEMBRANE WATERPROOFING OR DEPRESSIONS THAT COULD RETAIN WATER.

TYPICAL DECK REINFORCEMENT
SCALE: ¾" = 1'–0"

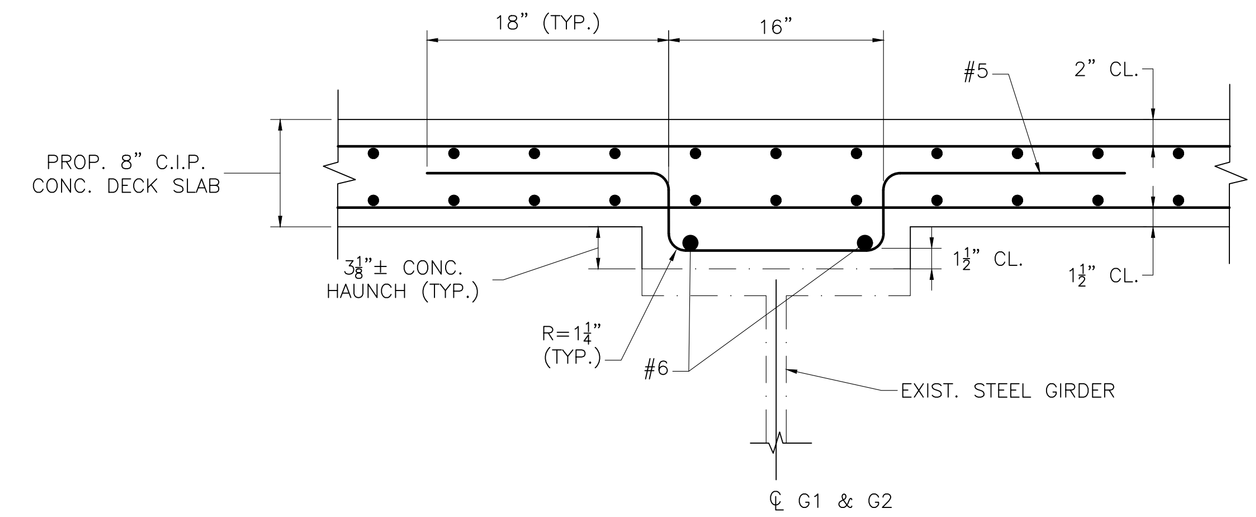

HAUNCH DETAIL (G1 AND G2)
SCALE: 1½" = 1'–0"

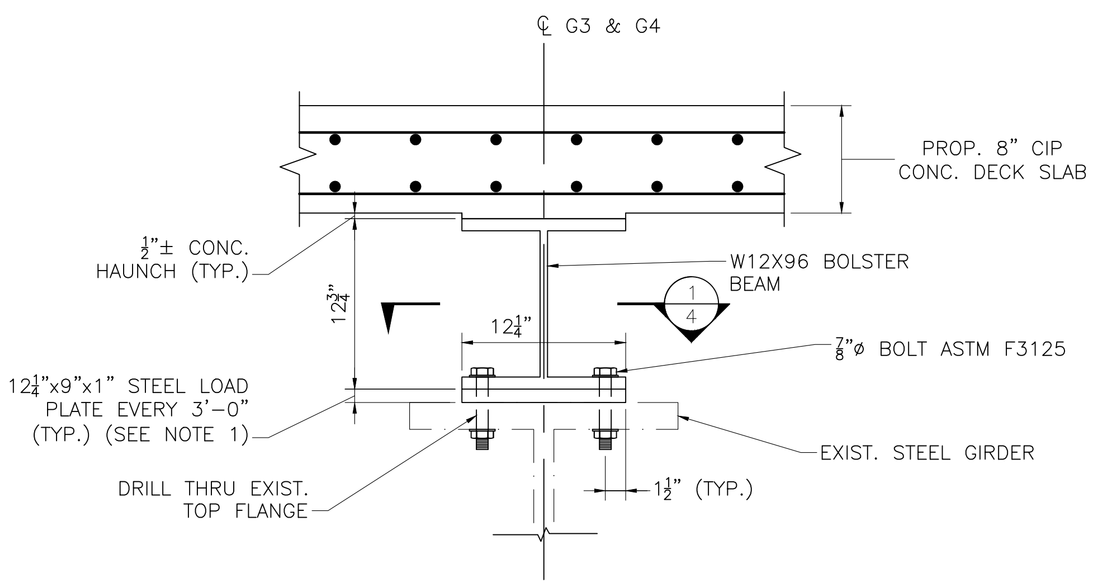

HAUNCH DETAIL (G3 AND G4)
SCALE: 1½" = 1'–0"

NOTE:
1. STEEL LOAD PLATES SPACED TO AVOID TOP FLANGE BRACING, SPACING SHOWN IS APPROXIMATE.

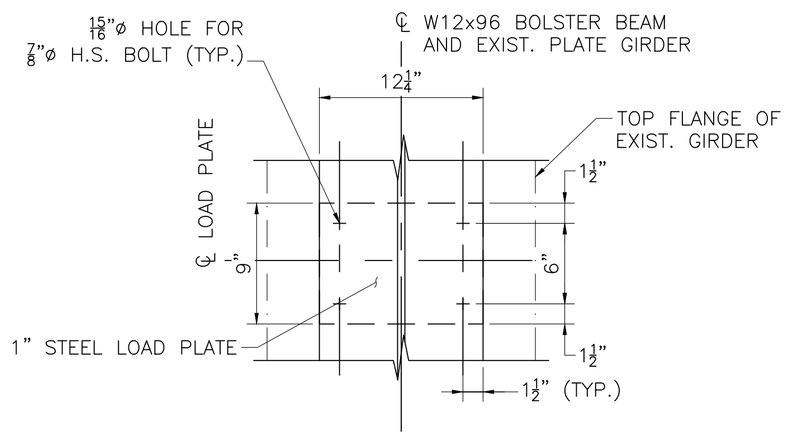

SECTION 1
SCALE: 1½" = 1'–0"

10/28/2022	FIRST STRUCTURAL SUBMITTAL
DATE	DESCRIPTION

THIS SHEET IS APPROVED FOR CONSTRUCTION BY MASSDOT
AUTHORIZED SIGNATORY: _____ STATE BRIDGE ENGINEER
USE ONLY PRINTS OF LATEST DATE

608930_BR4-7(L04045).DWG Plotted on 28-Oct-2022 2:13 PM
Proposal No. 608930-128034
October 28, 2022
First Structural Submittal (S1)
A00860 - 92

LAWRENCE
LMRC RAIL TRAIL OVER SOUTH CANAL

STATE	FED. AID PROJ. NO.	SHEET NO.	TOTAL SHEETS
MA	-	154	225
PROJECT FILE NO.	608930		

SUPERSTRUCTURE DETAILS (2 OF 2)

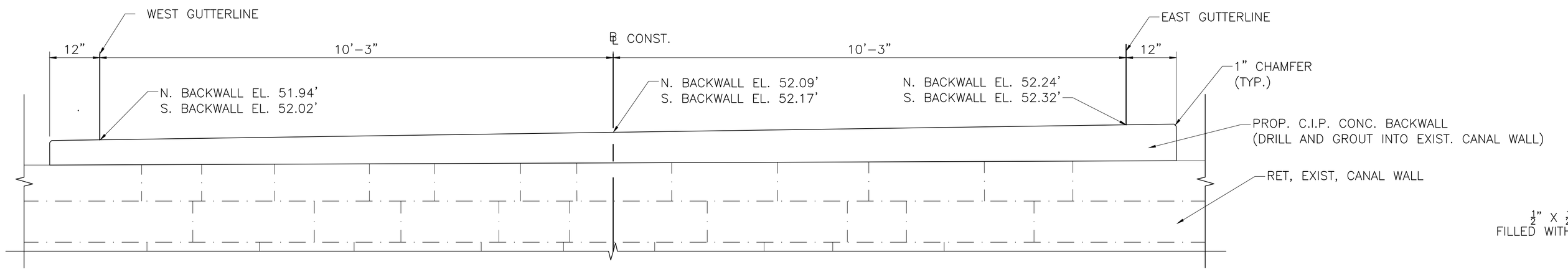

NOTE:
DOWELS NOT SHOWN FOR CLARITY.

BACKWALL ELEVATION
SCALE: ¾" = 1'-0"

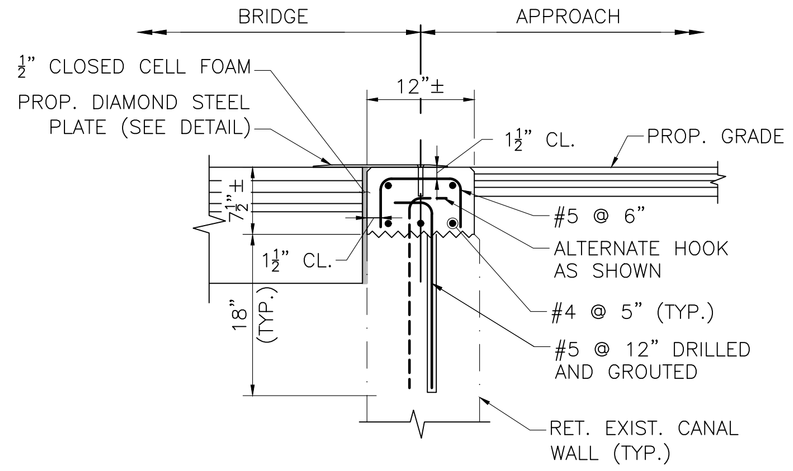

NOTES:
1. CONTRACTOR TO VERIFY MASONRY ABUTMENT DIMENSIONS FOR PROPOSED CONCRETE CAP.
2. PROPOSED CONCRETE CAP SHALL BE 4000 PSI, ¾ IN, 585 HP CONCRETE.

BACKWALL CONCRETE CAP DETAIL
SCALE: 1" = 1'-0"

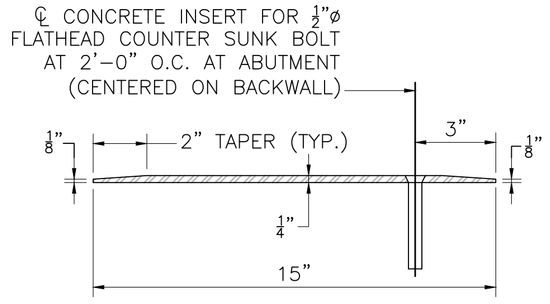

DIAMOND STEEL PLATE DETAIL
SCALE: 3" = 1'-0"

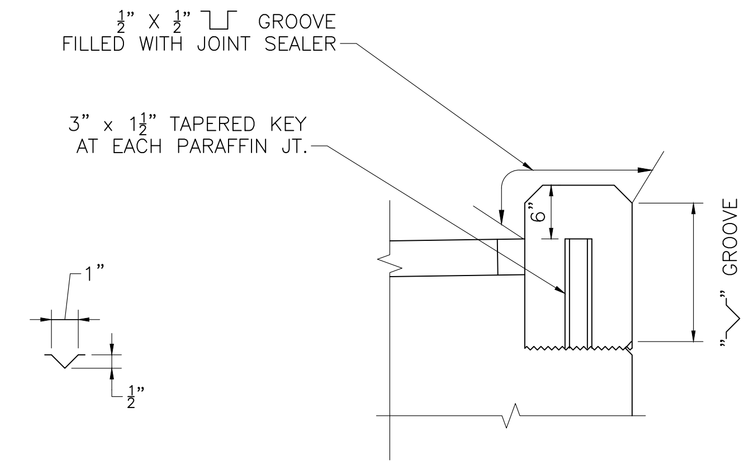

NOTES:
1. ALL CONCRETE ABOVE SLAB SHALL BE POURED IN ALTERNATING SECTIONS WITH NO LESS THAN 3 DAYS BETWEEN POURS.
2. DO NOT CARRY LONGITUDINAL BARS THROUGH THE PARAFFIN JOINTS. END THE REINFOCEMENT 2" CLEAR OF JOINT.
3. JOINT SHALL BE SQUARE TO FACE OF CURB.

PARAFFIN JOINT DETAIL
SCALE: 1" = 1'-0"

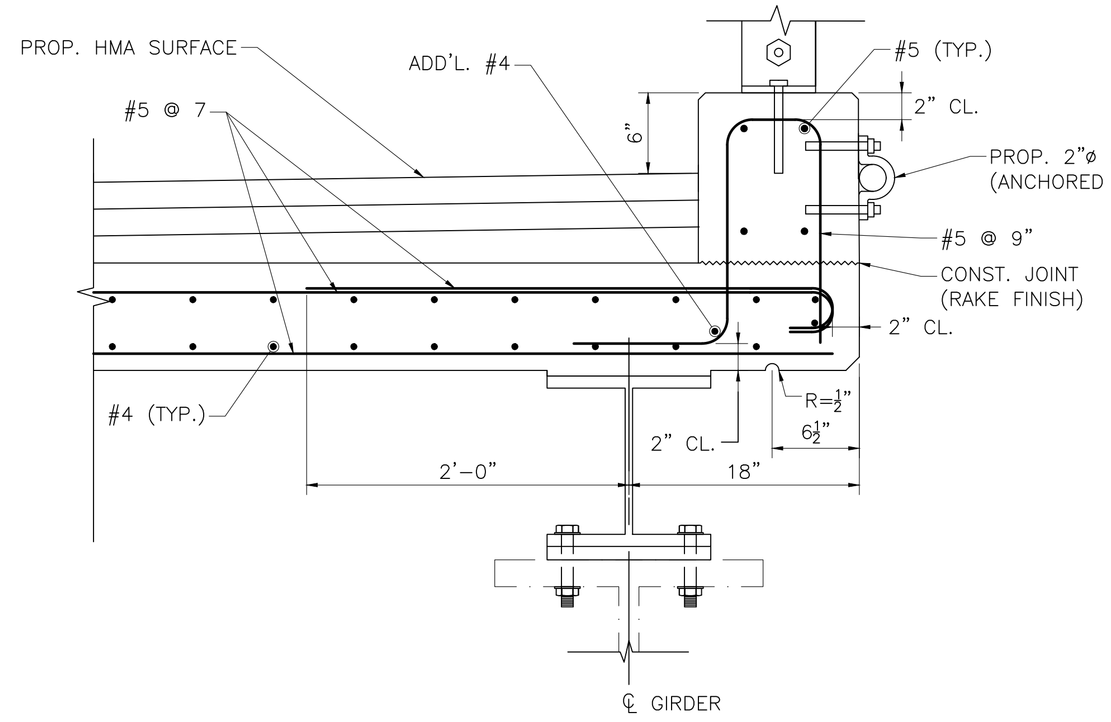

SECTION THROUGH CURB AND OVERHANG (EAST SIDE SHOWN, WEST SIDE SIMILAR)
SCALE: 1½" = 1'-0"

PAVEMENT NOTES

HMA BRIDGE SURFACE
SURFACE: (1½" TO 4½") VARIABLE DEPTH SUPERPAVE BRIDGE SURFACE COURSE (SSC-B-9.5) OVER 2½" SUPERPAVE BRIDGE PROTECTIVE COURSE (SPC-B-9.5)

10/28/2022	FIRST STRUCTURAL SUBMITTAL
DATE	DESCRIPTION

THIS SHEET IS APPROVED FOR CONSTRUCTION BY MASSDOT
AUTHORIZED SIGNATORY: _____ STATE BRIDGE ENGINEER
USE ONLY PRINTS OF LATEST DATE

608930_BR4-7(L04045).DWG Plotted on 28-Oct-2022 2:13 PM
Proposal No. 608930-128034
October 28, 2022
First Structural Submittal (S1)
A00860 - 93

LAWRENCE
LMRC RAIL TRAIL OVER SOUTH CANAL

STATE	FED. AID PROJ. NO.	SHEET NO.	TOTAL SHEETS
MA	-	155	225
PROJECT FILE NO.	608930		

RAILING DETAILS

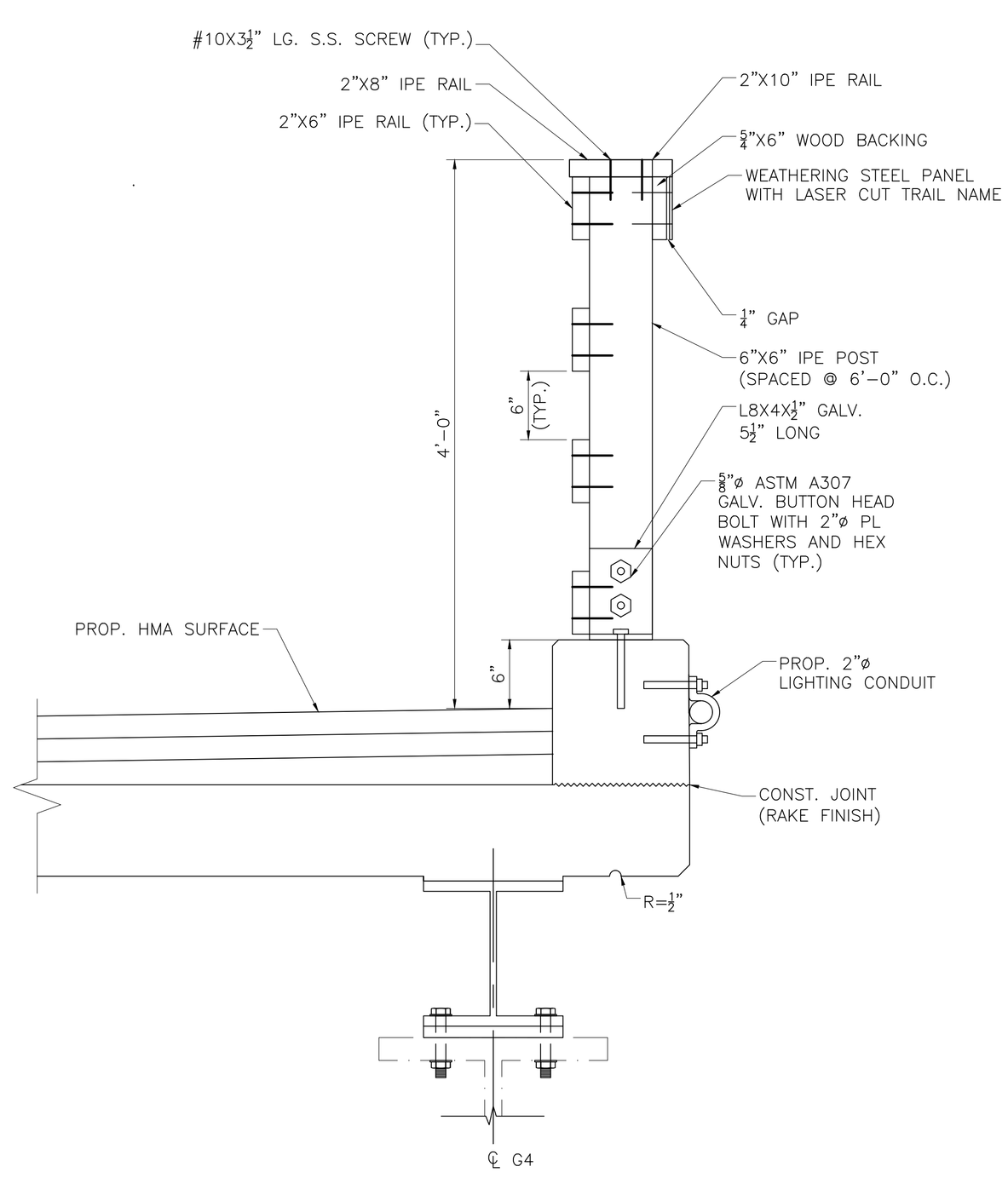

TRANSVERSE SECTION AT EAST SIDE, WEST SIDE SIMILAR

SCALE: 1½" = 1'-0"

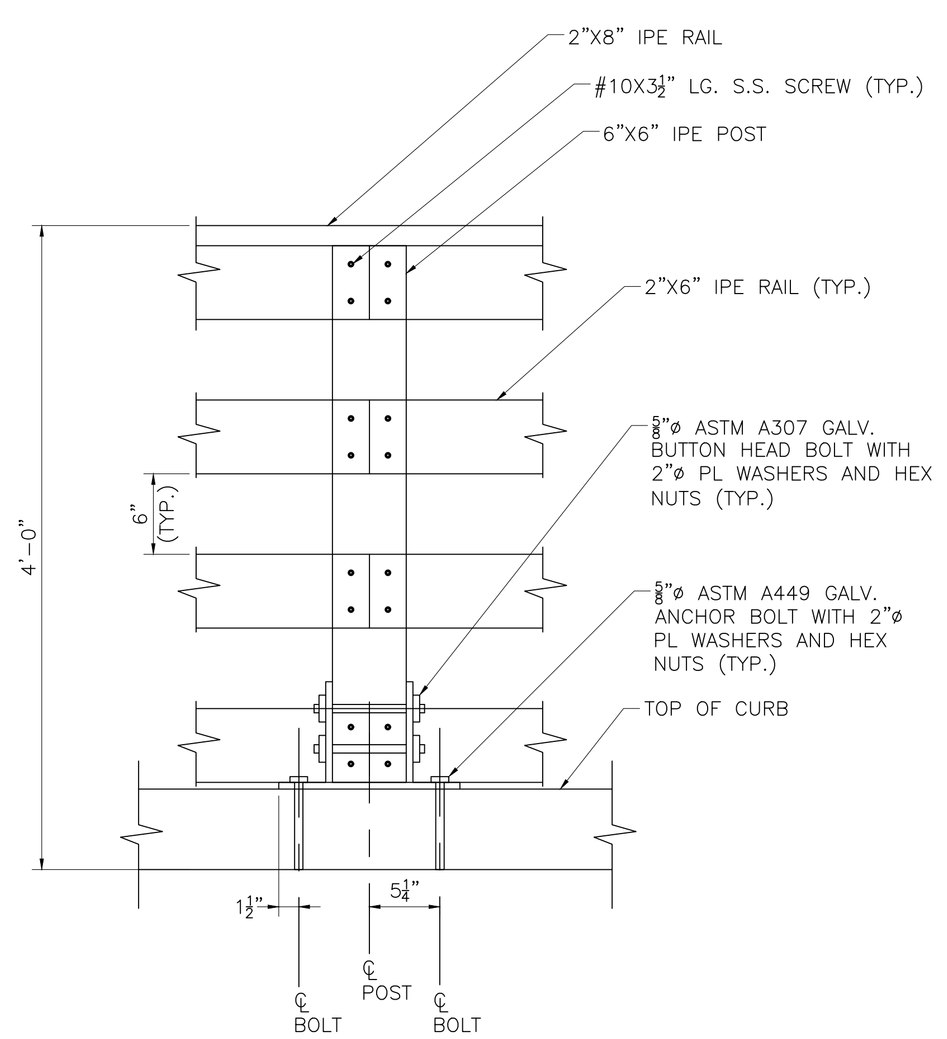

RAIL TO POST CONNECTION

SCALE: 1½" = 1'-0"

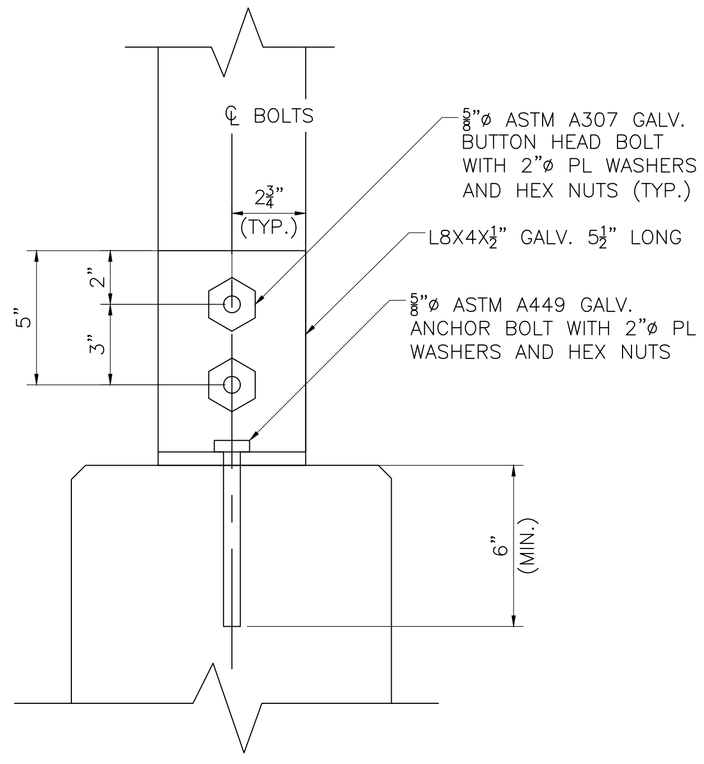

POST TO CURB CONNECTION

SCALE: 3" = 1'-0"

10/28/2022	FIRST STRUCTURAL SUBMITTAL
DATE	DESCRIPTION

THIS SHEET IS APPROVED FOR CONSTRUCTION BY MASSDOT
AUTHORIZED SIGNATORY: _____ STATE BRIDGE ENGINEER

USE ONLY PRINTS OF LATEST DATE

SHEET 6 OF 6 SHEETS BRIDGE NO. L-04-045 (C91)

608930_BR4-7(L04045).DWG Plotted on 28-Oct-2022 2:13 PM
Proposal No. 608930-128034
October 28, 2022
First Structural Submittal (S1)
A00860 - 94

MASSACHUSETTS DEPARTMENT OF TRANSPORTATION
HIGHWAY DIVISION

LAWRENCE LOWELL STREET			
STATE	FED. AID PROJ. NO.	SHEET NO.	TOTAL SHEETS
MA	-	1	26
PROJECT FILE NO.	608930		

TITLE SHEET & INDEX

PLAN AND PROFILE OF

LOWELL STREET

BRIDGE NO. L-04-027

IN THE CITY OF

LAWRENCE

ESSEX COUNTY

FEDERAL AID PROJECT NO. TBD

NOI SUBMITTAL

THESE PLANS ARE SUPPLEMENTED BY THE OCTOBER 2017 CONSTRUCTION STANDARD DETAILS, THE 2015 OVERHEAD SIGNAL STRUCTURE AND FOUNDATION STANDARD DRAWINGS, MASSDOT TRAFFIC MANAGEMENT PLANS AND DETAIL DRAWINGS, THE 1990 STANDARD DRAWINGS FOR SIGNS AND SUPPORTS, THE 1968 STANDARD DRAWINGS FOR TRAFFIC SIGNALS AND HIGHWAY LIGHTING, AND THE LATEST EDITION OF THE AMERICAN STANDARD FOR NURSERY STOCK.

INDEX

SHEET NO.	DESCRIPTION
1	TITLE SHEET & INDEX
2	LEGEND & ABBREVIATIONS
3	TYPICAL SECTIONS & PAVEMENT NOTES
4	CONSTRUCTION PLAN
5	PROFILE
6	~~CURB TIE & GRADING PLAN~~ OMITTED
7	~~TRAFFIC SIGN & PAVEMENT MARKING PLAN~~ OMITTED
8	~~UTILITY PLAN~~ OMITTED
9-10	~~TEMPORARY TRAFFIC CONTROL PLANS~~ OMITTED
11	CONSTRUCTION DETAILS
12-24	BRIDGE PLANS - L-04-027
25-26	~~CROSS SECTIONS~~ OMITTED

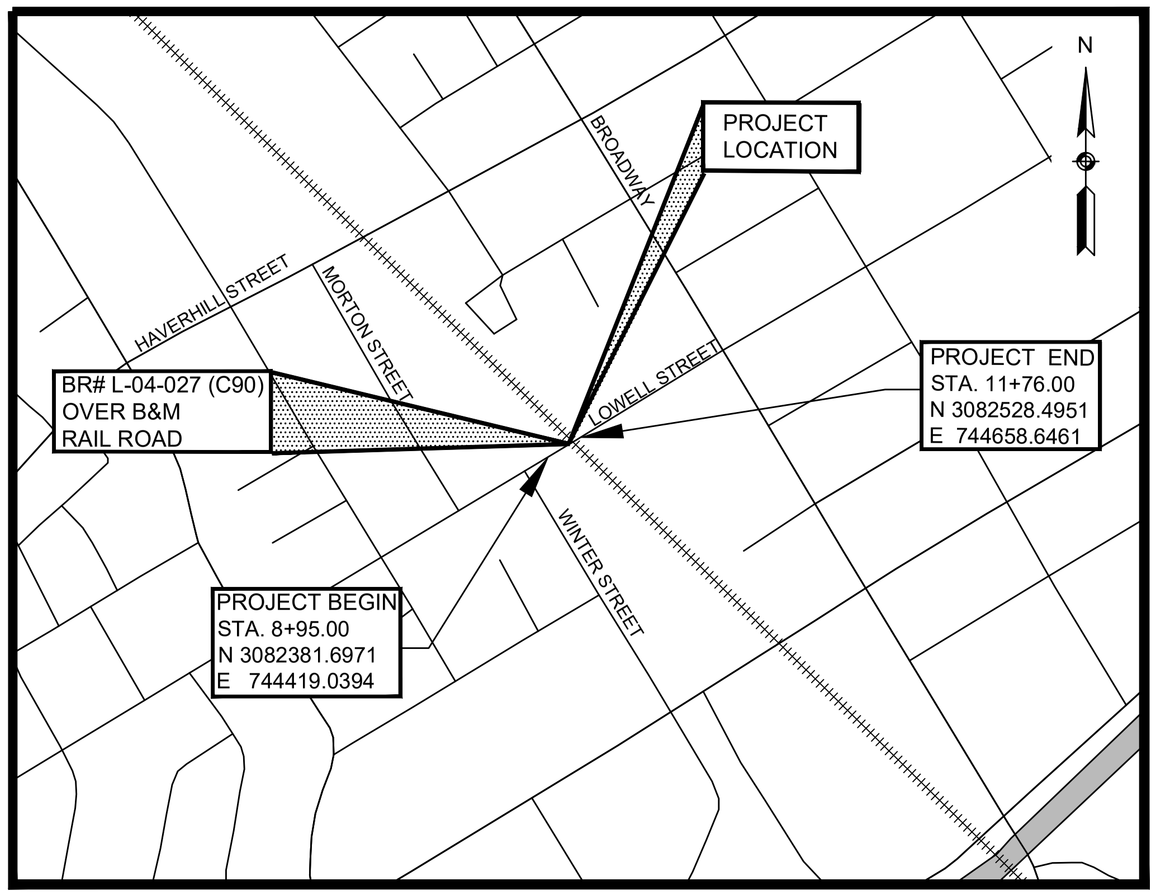

300 0 300 600

SCALE 1" = 300'

LENGTH OF PROJECT = 281.00 FEET = 0.053 MILES

DESIGN DESIGNATION (LOWELL STREET)

DESIGN SPEED	35 MPH
ADT (2021)	6,160
ADT (2041)	9,065
K	8.2%
D	60.6%
T (PEAK HOUR)	2.0%
T (AVERAGE DAY)	2.0%
DHV	745
DDHV	450
FUNCTIONAL CLASSIFICATION	URBAN COLLECTOR

NOTE: PLANS FOR PERMITTING USE ONLY.

COMMONWEALTH OF MASSACHUSETTS
LAUREN NICHOLSON
CIVIL
No. 56061
PROFESSIONAL ENGINEER

DATE	DESCRIPTION	REV #
8/16/2023	NOI SUBMITTAL	-

TEC
The Engineering Corp

282 Merrimack Street
2nd Floor
Lawrence, MA 01843
978-794-1792

311 Main Street
2nd Floor
Worcester, MA 01608
508-868-5104

169 Ocean Blvd, Unit 3
PO Box 249
Hampton, NH 03842
603-601-8154

www.TheEngineeringCorp.com

massDOT
Massachusetts Department of Transportation
Highway Division

APPROVED

CHIEF ENGINEER **DATE**

608930(75%)HD1(TITLE & INDEX).DWG Plotted on 28-Oct-2022 11:13 AM

A00860 - 95

Proposal No. 608930-128034

GENERAL SYMBOLS

EXISTING	PROPOSED	DESCRIPTION
JB	JB	JERSEY BARRIER
CB	CB	CATCH BASIN
		CATCH BASIN CURB INLET
FP	FP	FLAG POLE
GP	GP	GAS PUMP
MB	MB	MAIL BOX
		POST SQUARE
		POST CIRCULAR
WELL	WELL	WELL
EHH	EHH	ELECTRIC HANDHOLE
		FENCE GATE POST
GG	GG	GAS GATE
BHL #	BHL #	BORING HOLE
MW #	MW #	MONITORING WELL
TP #	TP #	TEST PIT
		HYDRANT
		LIGHT POLE
CO.BD.		COUNTY BOUND
		GPS POINT
		CABLE MANHOLE
		DRAINAGE MANHOLE
		ELECTRIC MANHOLE
		GAS MANHOLE
		MISC MANHOLE
		SEWER MANHOLE
		TELEPHONE MANHOLE
		WATER MANHOLE
MHB	MHB	MASSACHUSETTS HIGHWAY BOUND
MON		MONUMENT
SB		STONE BOUND
TB		TOWN OR CITY BOUND
		TRAVERSE OR TRIANGULATION STATION
TPL or GUY	TPL or GUY	TROLLEY POLE OR GUY POLE
HTP		TRANSMISSION POLE
UFB	UFB	UTILITY POLE W/ FIREBOX
UPDL	UPDL	UTILITY POLE WITH DOUBLE LIGHT
ULT	ULT	UTILITY POLE W / 1 LIGHT
UPL	UPL	UTILITY POLE
		BUSH
SIZE & TYPE		TREE
		STUMP
		SWAMP / MARSH
WG	WG	WATER GATE
PM	PM	PARKING METER
		OVERHEAD CABLE/WIRE
		CURBING
100 99		CONTOURS (ON-THE-GROUND SURVEY DATA)
100 99		CONTOURS (PHOTOGRAMMETRIC DATA)
		UNDERGROUND DRAIN PIPE (DOUBLE LINE 24 INCH AND OVER)
		UNDERGROUND ELECTRIC DUCT (DOUBLE LINE 24 INCH AND OVER)
		UNDERGROUND GAS MAIN (DOUBLE LINE 24 INCH AND OVER)
		UNDERGROUND SEWER MAIN (DOUBLE LINE 24 INCH AND OVER)
		UNDERGROUND TELEPHONE DUCT (DOUBLE LINE 24 INCH AND OVER)
		UNDERGROUND WATER MAIN (DOUBLE LINE 24 INCH AND OVER)
		BALANCED STONE WALL
		GUARD RAIL - STEEL POSTS
		GUARD RAIL - WOOD POSTS
		GUARD RAIL - DOUBLE FACE - STEEL POSTS
		GUARD RAIL - DOUBLE FACE - WOOD POSTS
		CHAIN LINK OR METAL FENCE
		WOOD FENCE
		SEDIMENT CONTROL BARRIER
		TREE LINE
		SAWCUT LINE
		TOP OR BOTTOM OF SLOPE
		LIMIT OF EDGE OF PAVEMENT OR COLD PLANE AND OVERLAY
		BANK OF RIVER OR STREAM
		BORDER OF WETLAND
		100 FT WETLAND BUFFER
		200 FT RIVERFRONT BUFFER
		STATE HIGHWAY LAYOUT
		TOWN OR CITY LAYOUT
		COUNTY LAYOUT
		RAILROAD SIDELINE
		TOWN OR CITY BOUNDARY LINE
		PROPERTY LINE OR APPROXIMATE PROPERTY LINE
		EASEMENT

TRAFFIC SYMBOLS

EXISTING	PROPOSED	DESCRIPTION
1	1	CONTROLLER PHASE ACTUATED
		TRAFFIC SIGNAL HEAD (SIZE AS NOTED)
		WIRE LOOP DETECTOR (6' x 6' TYP UNLESS OTHERWISE SPECIFIED)
		VIDEO DETECTION CAMERA
		MICROWAVE DETECTOR
		PEDESTRIAN PUSH BUTTON, SIGN (DIRECTIONAL ARROW AS SHOWN) AND SADDLE
	*	EMERGENCY PREEMPTION CONFIRMATION STROBE LIGHT
		VEHICULAR SIGNAL HEAD
		VEHICULAR SIGNAL HEAD, OPTICALLY PROGRAMMED
		FLASHING BEACON
		PEDESTRIAN SIGNAL HEAD, (TYPE AS NOTED OR AS SPECIFIED)
RRSG	RRSG	RAILROAD SIGNAL
OR		SIGNAL POST AND BASE (ALPHA-NUMERIC DESIGNATION NOTED)
	20'	MAST ARM, SHAFT AND BASE (ARM LENGTH AS NOTED)
		HIGH MAST POLE OR TOWER
		SIGN AND POST
		SIGN AND POST (2 POSTS)
	20'	MAST ARM WITH LUMINAIRE
		OPTICAL PRE-EMPTION DETECTOR
		CONTROL CABINET, GROUND MOUNTED
		CONTROL CABINET, POLE MOUNTED
		FLASHING BEACON CONTROL AND METER PEDESTAL
		LOAD CENTER ASSEMBLY
		PULL BOX 12"x12" (OR AS NOTED)
		ELECTRIC HANDHOLE 12"x24" (OR AS NOTED)
		TRAFFIC SIGNAL CONDUIT

PAVEMENT MARKINGS SYMBOLS

EXISTING	PROPOSED	DESCRIPTION
		PAVEMENT ARROW - WHITE
ONLY	ONLY	LEGEND "ONLY" - WHITE
	SL	STOP LINE
	CW	CROSSWALK
	SWL	SOLID WHITE LINE
	SYL	SOLID YELLOW LINE
	BWL	BROKEN WHITE LINE
	BYL	BROKEN YELLOW LINE
	DWL	DOTTED WHITE LINE
	DYL	DOTTED YELLOW LINE
	DWLEx	DOTTED WHITE LINE EXTENSION
	DYLEx	DOTTED YELLOW LINE EXTENSION
	DBWL	DOUBLE WHITE LINE
	DBYL	DOUBLE YELLOW LINE

ABBREVIATIONS

GENERAL

AADT	ANNUAL AVERAGE DAILY TRAFFIC
ABAN	ABANDON
ADJ	ADJUST
APPROX.	APPROXIMATE
A.C.	ASPHALT CONCRETE
ACCM PIPE	ASPHALT COATED CORRUGATED METAL PIPE
BIT.	BITUMINOUS
BC	BOTTOM OF CURB
BD.	BOUND
BL	BASELINE
BLDG	BUILDING
BM	BENCHMARK
BO	BY OTHERS
BOS	BOTTOM OF SLOPE
BR.	BRIDGE
CB	CATCH BASIN
CBCI	CATCH BASIN WITH CURB INLET
CC	CEMENT CONCRETE
CCM	CEMENT CONCRETE MASONRY
CEM	CEMENT
CI	CURB INLET
CIP	CAST IRON PIPE
CLF	CHAIN LINK FENCE
CL	CENTERLINE
CMP	CORRUGATED METAL PIPE
CSP	CORRUGATED STEEL PIPE
CO.	COUNTY
CONC	CONCRETE
CONT	CONTINUOUS
CONST	CONSTRUCTION
CR GR	CROWN GRADE
DHV	DESIGN HOURLY VOLUME
DI	DROP INLET
DIA	DIAMETER
DIP	DUCTILE IRON PIPE
DW	STEADY DON'T WALK - PORTLAND ORANGE
DWY	DRIVEWAY
ELEV (or EL.)	ELEVATION
EMB	EMBANKMENT
EOP	EDGE OF PAVEMENT
EXIST (or EX)	EXISTING
EXC	EXCAVATION
F&C	FRAME AND COVER
F&G	FRAME AND GRATE
FDN.	FOUNDATION
FLDSTN	FIELDSTONE
GAR	GARAGE
GD	GROUND
GG	GAS GATE
GI	GUTTER INLET
GIP	GALVANIZED IRON PIPE
GRAN	GRANITE
GRAV	GRAVEL
GRD	GUARD
HDW	HEADWALL
HMA	HOT MIX ASPHALT
HOR	HORIZONTAL
HYD	HYDRANT
INV	INVERT
JCT	JUNCTION
L	LENGTH OF CURVE
LB	LEACH BASIN
LP	LIGHT POLE
LT	LEFT
MAX	MAXIMUM
MB	MAILBOX
MH	MANHOLE
MHB	MASSACHUSETTS HIGHWAY BOUND
MIN	MINIMUM
NIC	NOT IN CONTRACT
NO.	NUMBER
PC	POINT OF CURVATURE
PCC	POINT OF COMPOUND CURVATURE
P.G.L.	PROFILE GRADE LINE
PI	POINT OF INTERSECTION
POC	POINT ON CURVE
POT	POINT ON TANGENT
PRC	POINT OF REVERSE CURVATURE
PROJ	PROJECT
PROP	PROPOSED
PSB	PLANTABLE SOIL BORROW
PT	POINT OF TANGENCY
PVC	POINT OF VERTICAL CURVATURE
PVI	POINT OF VERTICAL INTERSECTION
PVT	POINT OF VERTICAL TANGENCY
PVMT	PAVEMENT
PWW	PAVED WATER WAY

LAWRENCE
LOWELL STREET

STATE	FED. AID PROJ. NO.	SHEET NO.	TOTAL SHEETS
MA	-	2	26
PROJECT FILE NO.	608930		

LEGEND & ABBREVIATIONS

ABBREVIATIONS (cont.)

GENERAL

R	RADIUS OF CURVATURE
R&D	REMOVE AND DISPOSE
RCP	REINFORCED CONCRETE PIPE
RD	ROAD
RDWY	ROADWAY
REM	REMOVE
RET	RETAIN
RET WALL	RETAINING WALL
ROW	RIGHT OF WAY
RR	RAILROAD
R&R	REMOVE AND RESET
R&S	REMOVE AND STACK
RT	RIGHT
SB	STONE BOUND
SHLD	SHOULDER
SMH	SEWER MANHOLE
ST	STREET
STA	STATION
SSD	STOPPING SIGHT DISTANCE
SHLO	STATE HIGHWAY LAYOUT LINE
SW	SIDEWALK
T	TANGENT DISTANCE OF CURVE/TRUCK %
TAN	TANGENT
TEMP	TEMPORARY
TC	TOP OF CURB
TOS	TOP OF SLOPE
TYP	TYPICAL
UP	UTILITY POLE
VAR	VARIES
VERT	VERTICAL
VC	VERTICAL CURVE
WCR	WHEEL CHAIR RAMP
WG	WATER GATE
WIP	WROUGHT IRON PIPE
WM	WATER METER/WATER MAIN
X-SECT	CROSS SECTION

TRAFFIC SIGNAL ABBREVIATIONS

CAB	CABINET
CCVE	CLOSED CIRCUIT VIDEO EQUIPMENT
DW	STEADY UPRAISED HAND
FDW	FLASHING UPRAISED HAND
FR	FLASHING CIRCULAR RED
FRL	FLASHING RED LEFT ARROW
FRR	FLASHING RED RIGHT ARROW
FY	FLASHING CIRCULAR YELLOW
FYL	FLASHING YELLOW LEFT ARROW
FYR	FLASHING YELLOW RIGHT ARROW
G	STEADY CIRCULAR GREEN
GL	STEADY GREEN LEFT ARROW
GR	STEADY GREEN RIGHT ARROW
GSL	STEADY GREEN SLASH LEFT ARROW
GSR	STEADY GREEN SLASH RIGHT ARROW
GV	STEADY GREEN VERTICAL ARROW
OL	OVERLAP
PED	PEDESTRIAN
PTZ	PAN, TILT, ZOOM
R	STEADY CIRCULAR RED
RL	STEADY RED LEFT ARROW
RR	STEADY RED RIGHT ARROW
TR SIG	TRAFFIC SIGNAL
TSC	TRAFFIC SIGNAL CONDUIT
W	STEADY WALKING PERSON
Y	STEADY CIRCULAR YELLOW
YL	STEADY YELLOW LEFT ARROW

608930\75%\HD2\LEGEND.DWG Plotted on 28-Oct-2022 11:13 AM

Proposal No. 608930-128034

A00860 - 96

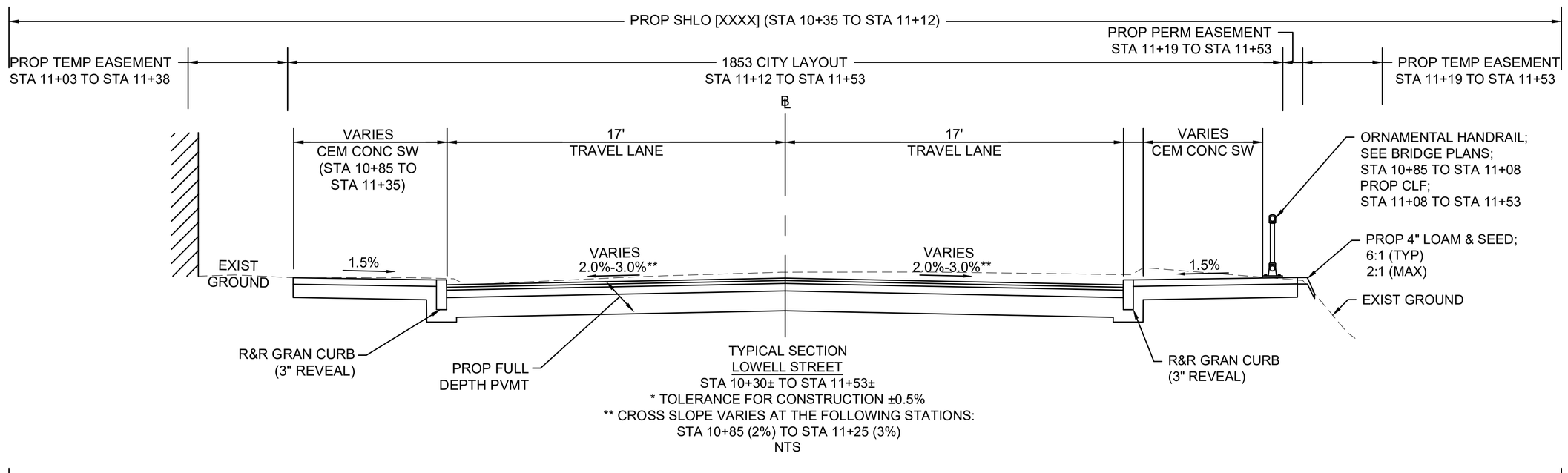

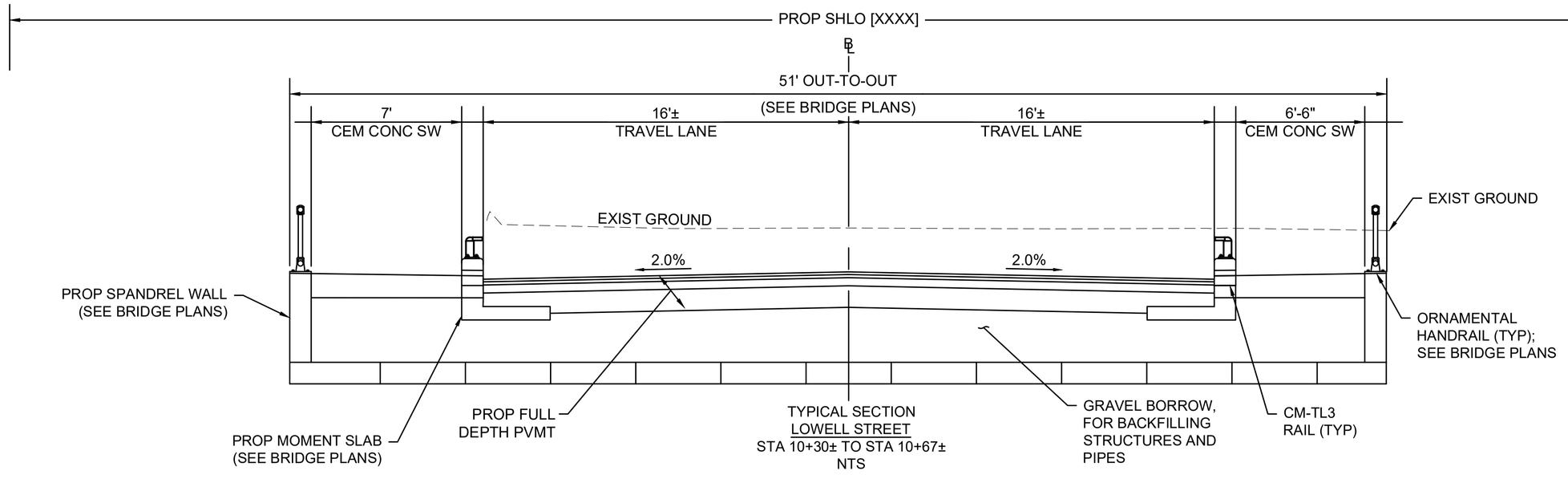

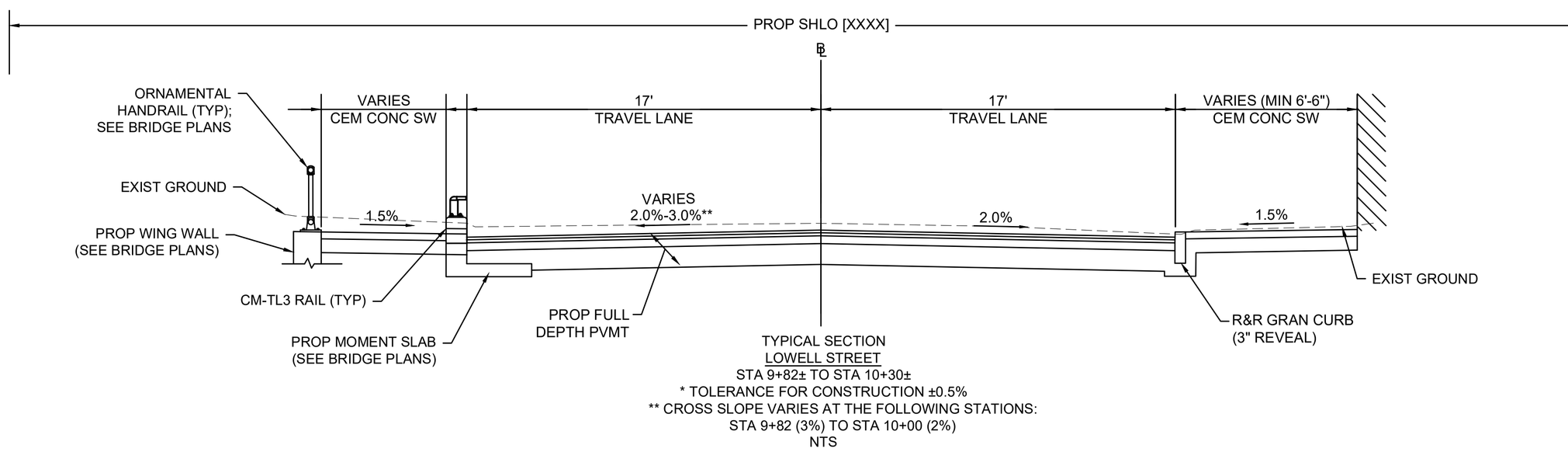

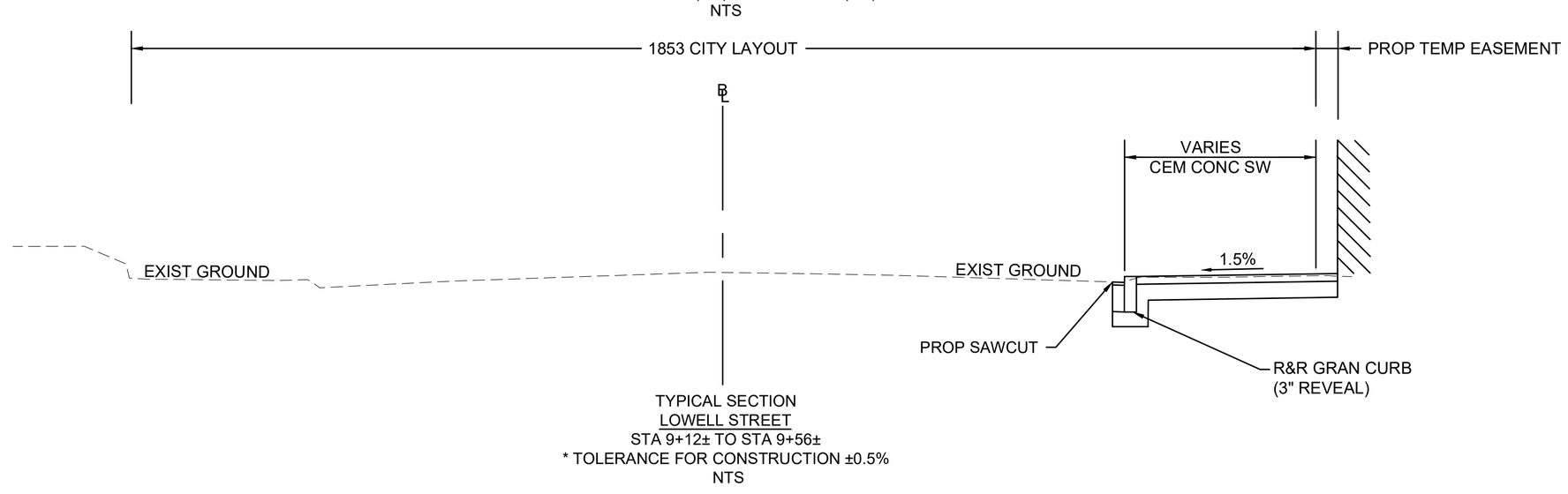

PAVEMENT NOTES

PROPOSED HOT MIX ASPHALT (HMA) MILL & OVERLAY

SURFACE: 1½" SUPERPAVE SURFACE COURSE - 9.5 (SSC-9.5) OVER

BASE: 1½" PAVEMENT FINE MILLING

PROPOSED FULL DEPTH PAVEMENT (ROADWAY)

SURFACE: 1½" SUPERPAVE SURFACE COURSE - 9.5 (SSC-9.5) OVER
1¾" SUPERPAVE INTERMEDIATE COURSE - 12.5 (SIC-12.5)

BASE: 4½" SUPERPAVE BASE COURSE - 37.5 (SBC-37.5)

SUBBASE: 4" DENSE GRADED CRUSHED STONE OVER
12" GRAVEL BORROW, TYPE b

PROPOSED FULL DEPTH PAVEMENT (OVER BRIDGE)

SURFACE: 1½" SUPERPAVE SURFACE COURSE - 9.5 (SSC-9.5) OVER
1¾" SUPERPAVE INTERMEDIATE COURSE - 12.5 (SIC-12.5)

BASE: 4½" SUPERPAVE BASE COURSE - 37.5 (SBC-37.5)

SUBBASE: VARIABLE DEPTH GRAVEL BORROW, TYPE b (12" MIN.)

PROPOSED CEMENT CONCRETE SIDEWALK

(LIMITS MATCH BRIDGE INTEGRAL WINGWALL LIMITS - SEE BRIDGE PLANS)

SURFACE: 4" CEMENT CONCRETE (4000 PSI, ¾", 610,)

BASE: 8" GRAVEL BORROW, TYPE b

PROPOSED CEMENT CONCRETE SIDEWALK THROUGH DRIVEWAY

SURFACE: 6" CEMENT CONCRETE (AIR ENTRAINED, 4000 PSI, ¾", 610,)

BASE: 8" GRAVEL BORROW, TYPE b (COMPACTED)

GENERAL PAVEMENT NOTES:

1. ASPHALT EMULSION FOR TACK COAT SHALL BE APPLIED BETWEEN ALL ASPHALT SURFACES AND SAWCUT JOINTS BEFORE PAVING. HMA JOINT SEALANT SHALL BE APPLIED TO ALL COLD JOINTS (LONGITUDINAL AND TRANSVERSE) BEFORE PAVING SURFACE COURSE. ASPHALT EMULSION FOR TACK COAT SHALL BE RS-1h AND SHALL BE APPLIED AT A RATE CONSISTENT WITH MASSDOT STANDARD SPECIFICATION 460.43G2. ALL SURFACES SHALL BE CLEAN OF ALL ORGANICS, DEBRIS, AND SAND PRIOR TO PAVING.
2. ALL HMA SHALL BE IN ACCORDANCE WITH SECTION 450.
3. HMA FOR WALKS AND DRIVEWAYS SHALL BE IN ACCORDANCE WITH SECTION 700.
4. ALL GRAVEL BORROW MEETING SPECIFICATION SHALL BE RETAINED IN PLACE, COMPACTED, AND LEVELED AS REQUIRED.

CONSTRUCTION NOTES:

1. THE SURVEY BASE PLAN WAS PREPARED BY TEC , INC. IN JULY 2018 AND UPDATED BY GREENMAN-PEDERSEN, INC IN DECEMBER 2021.

   HORIZONTAL DATUM = NAD83 (MASSACHUSETTS STATE PLANE COORDINATES)
   VERTICAL DATUM = NAVD88
2. ALL EXISTING TOWN LAYOUT LINES AND PRIVATE PROPERTY LINES HAVE BEEN ESTABLISHED FROM AVAILABLE INFORMATION AND THEIR EXACT LOCATION ARE NOT GUARANTEED.
3. THE LOCATIONS OF EXISTING UNDERGROUND UTILITIES ARE SHOWN IN AN APPROXIMATE WAY ONLY AND HAVE NOT BEEN INDEPENDENTLY VERIFIED BY THE OWNER OR ITS REPRESENTATIVE. THE CONTRACTOR SHALL CONTACT DIGSAFE (1-800-DIGSAFE) A MINIMUM OF 72 HOURS PRIOR TO ANY CONSTRUCTION TO VERIFY THE LOCATION OF ALL EXISTING UTILITIES BEFORE COMMENCING WORK, AND SHALL BE FULLY RESPONSIBLE FOR ANY AND ALL DAMAGES WHICH MIGHT BE OCCASIONED BY THE CONTRACTOR'S FAILURE TO LOCATE AND PRESERVE ANY AND ALL UNDERGROUND UTILITIES.
4. WHERE AN EXISTING UTILITY IS FOUND TO CONFLICT WITH THE PROPOSED WORK, THE LOCATION, ELEVATION AND SIZE OF THE UTILITY SHALL BE ACCURATELY DETERMINED WITHOUT DELAY BY THE CONTRACTOR, AND THE INFORMATION FURNISHED TO THE ENGINEER FOR RESOLUTION OF THE CONFLICT.
5. ALL PRIVATELY OWNED UTILITY STRUCTURES (GAS GATES, ELECTRIC/TELEPHONE MANHOLES, ETC.) SHALL BE ADJUSTED TO FINISHED GRADE BY THE PRIVATE UTILITY COMPANY, UNLESS DIRECTED OTHERWISE. THE CONTRACTOR SHALL COORDINATE WITH PRIVATE UTILITY COMPANIES FOR THE ALTERATION AND ADJUSTMENT, AS NECESSARY.
6. AREAS OUTSIDE THE LIMITS OF PROPOSED WORK DISTURBED BY THE CONTRACTOR'S OPERATIONS SHALL BE RESTORED BY THE CONTRACTOR TO THEIR ORIGINAL CONDITION AT THE CONTRACTORS EXPENSE.
7. THE TERM "PROPOSED" (PROP) MEANS WORK TO BE CONSTRUCTED USING NEW MATERIALS OR, WHERE APPLICABLE, RE-USING EXISTING MATERIALS IDENTIFIED AS "REMOVE AND RESET" (R&R).
8. THE TERM "MEET EXIST" MEANS TO MEET BOTH THE EXISTING ALIGNMENT AND ELEVATION.
9. TEMPORARY CONSTRUCTION FENCE SHALL BE INSTALLED AS SHOWN ON THE CONSTRUCTION PLANS AROUND BRIDGE WHILE EXISTING BRIDGE IS REMOVED & PROPOSED BRIDGE IS CONSTRUCTED.

LAWRENCE
LOWELL STREET

STATE	FED. AID PROJ. NO.	SHEET NO.	TOTAL SHEETS
MA	-	3	26
PROJECT FILE NO.	608930		

TYPICAL SECTIONS & PAVEMENT NOTES

608930(75%)HD3(TYP SECT).DWG Plotted on 28-Oct-2022 11:13 AM

Proposal No. 608930-128034

A00860 - 97

608930_HD4(CON PLANS) LOWELL STREET NOI.DWG Plotted on 18-Aug-2023 11:52 AM

LAWRENCE
LOWELL STREET

STATE	FED. AID PROJ. NO.	SHEET NO.	TOTAL SHEETS
MA	-	4	26
PROJECT FILE NO. 608930			

CONSTRUCTION PLAN

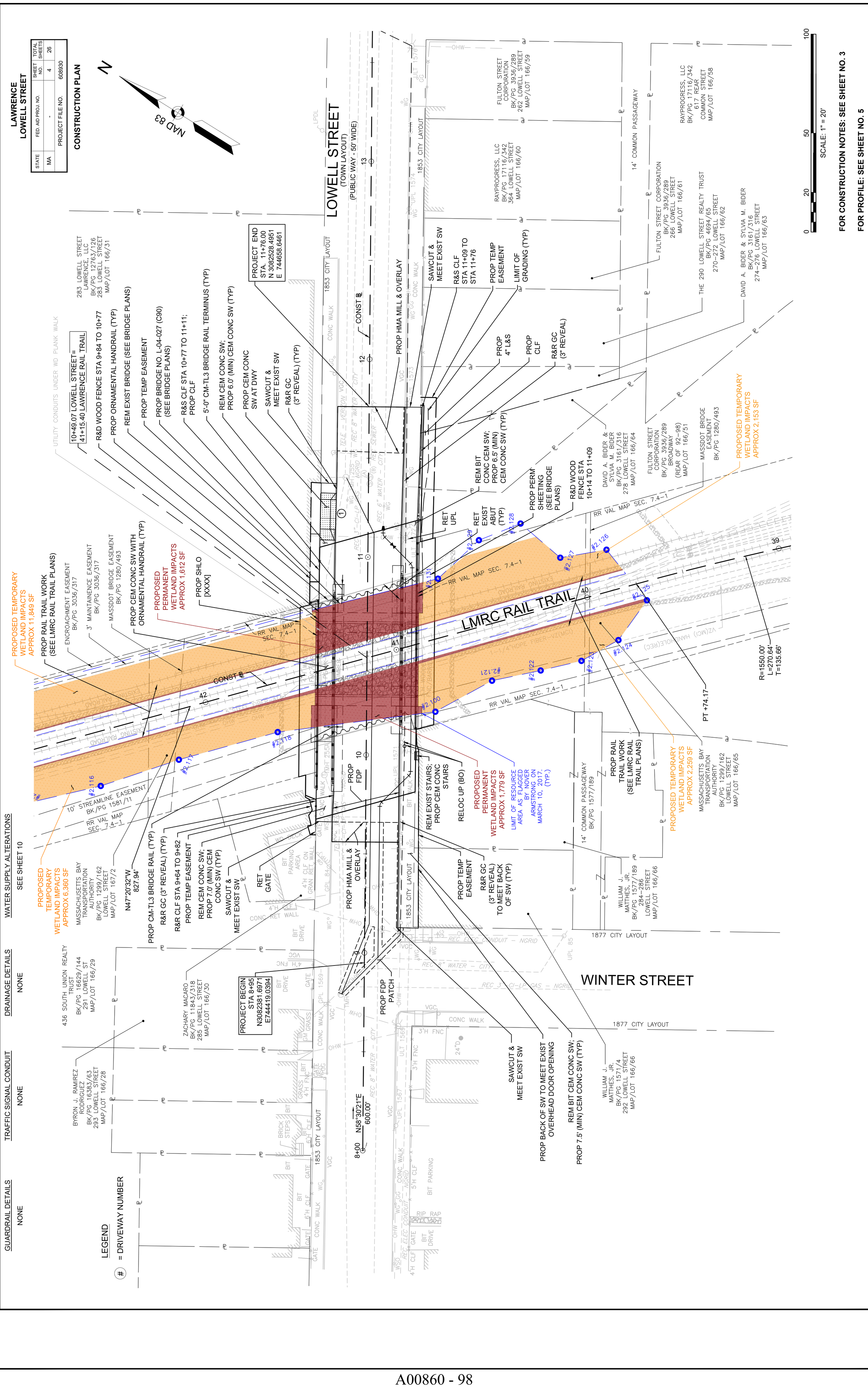

WATER SUPPLY ALTERATIONS
SEE SHEET 10

DRAINAGE DETAILS
NONE

TRAFFIC SIGNAL CONDUIT
NONE

GUARDRAIL DETAILS
NONE

608930[75%]HDS(PROF XSECT).DWG Plotted on 28-Oct-2022 11:14 AM

LAWRENCE
LOWELL STREET

STATE	FED. AID PROJ. NO.	SHEET NO.	TOTAL SHEETS
MA	-	5	26
	PROJECT FILE NO. 608930		

PROFILE

LOWELL STREET

HOR. SCALE IN FEET 20 0 20 40
VER. SCALE IN FEET 4 0 4 8

FOR CONSTRUCTION PLANS: SEE SHEET NO. 4

EXIST GRADE

PROJECT END
STA. 11+76.00
N 3082528.4951
E 744658.6461

LIMIT OF HMA MILL & OVERLAY
STA 11+76.00 ELEV. 66.04

LIMIT OF FULL DEPTH CONSTRUCTION
STA 11+53.00 ELEV. 66.69

GRADE BREAK STA = 11+76.00
ELEV = 66.04

-2.83%

PVT: 11+34.73
ELEV: 67.21

EXIST BOTTOM CHORD OF SUPERSTRUCTURE

PROP PRECAST ARCH
(SEE BRIDGE PLANS)
(BRIDGE NO. L-04-027 (C90))

RET EXIST
STONE ABUT (TYP)

REM EXIST TIMBER
PIERS AND TIMBER
SUPERSTRUCTURE (TYP)

PROP CONC
FOOTING (TYP)

℄ EAST BRG STA 10+71

℄ WEST BRG STA 10+24

3.5'

LMRC RAIL TRAIL

℄

46'

PROP. CLR. SPAN

11'-8"± RISE

HIGH POINT ELEV = 68.37
HIGH POINT STA = 10+52.53
PVI STA = 10+45.73
PVI ELEV = 69.73
A.D. = -6.13%
K = 29.03
178' VC
265.0' SSD

PVC: 9+56.73
ELEV: 66.79

PROP GRADE

EXIST GRADE

3.30%

GRADE BREAK STA = 9+56.00
ELEV = 66.77

LIMIT OF HMA MILL & OVERLAY
STA=9+56.00 ELEV=66.77

LIMIT OF FULL DEPTH
CONSTRUCTION
STA=9+66.00 ELEV=67.06

PROJECT BEGIN
STA. 8+95.00
N 3082381.6971
E 744419.0394

EXISTING ELEV	PROPOSED ELEV
62.8	
63.6	
64.5	
65.5	
66.7	**66.78**
68.2	**67.99**
70.3	**68.37**
68.2	**67.90**
66.6	
64.9	
63.0	

13+00
12+00
11+00
10+00
9+00

BENCHMARK:
MAG UTL 1574
N: 3082563.9699
E: 744754.8286
EL=64.39'

10+49.07 LOWELL STREET=
41+15.33 LAWRENCE RAIL TRAIL

BENCHMARK:
MAG UTL 1571
N: 3082425.3651
E: 744523.1850
EL=68.85'

BENCHMARK:
MAG UTL 1567
N: 3082325.0895
E: 744357.4103
EL=62.49'

NAVD 88
BASE ELEV
40.00

90 80 70 60 50 40

608930\(75%)HDS\DETAILS.DWG Plotted on 28-Oct-2022 11:16 AM

Proposal No. 608930-128034

A00860 - 100

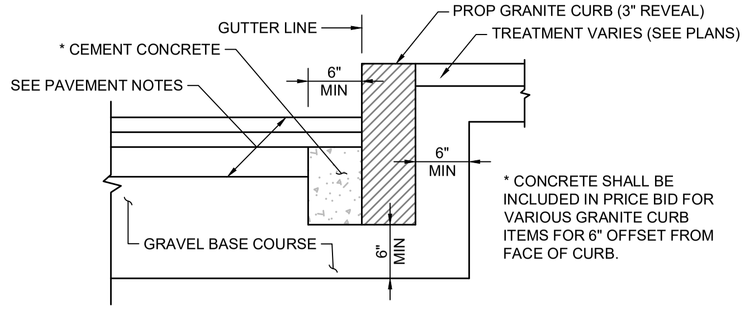

GRANITE CURB IN FULL DEPTH PAVEMENT

N.T.S.

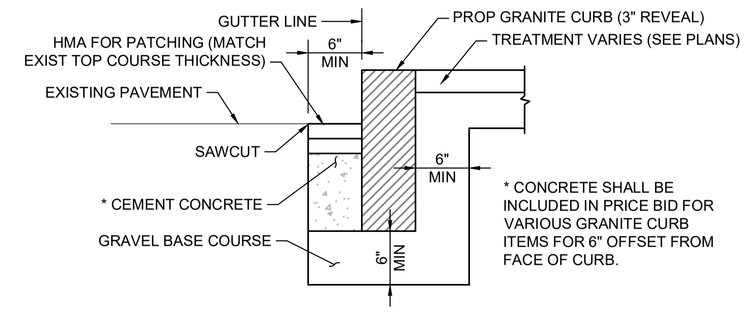

GRANITE CURB IN EXISTING PAVEMENT

N.T.S.

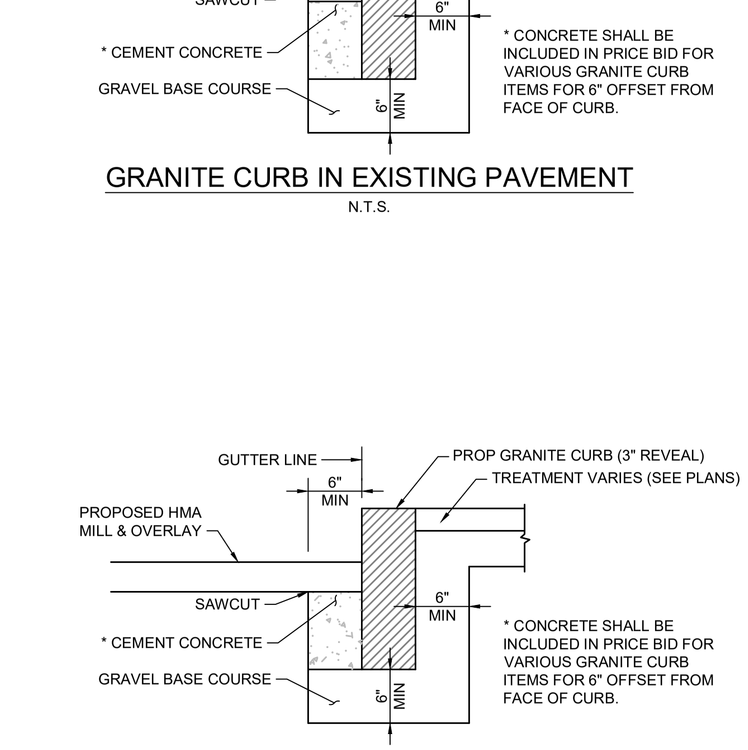

GRANITE CURB IN HMA MILL & OVERLAY

N.T.S.

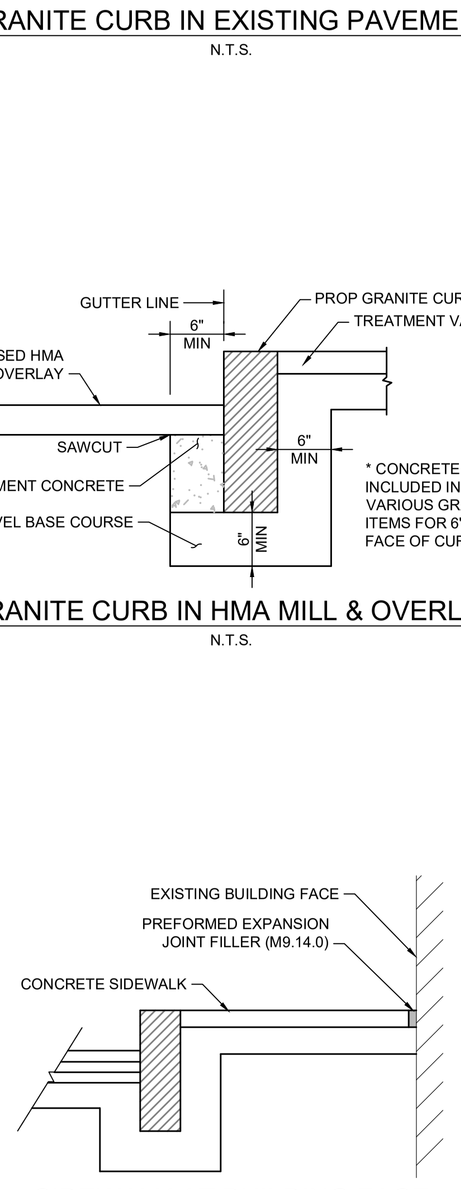

SIDEWALK AT BUILDING FACE

N.T.S.

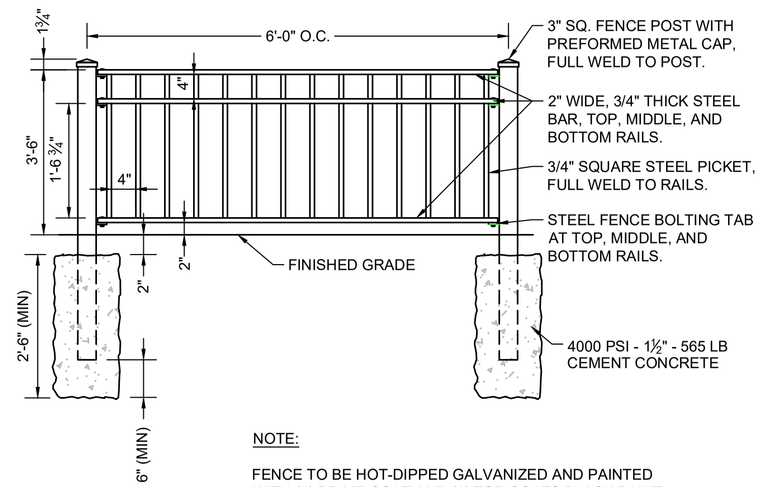

NOTE:

FENCE TO BE HOT-DIPPED GALVANIZED AND PAINTED WITH (1) PRIME COAT AND (2) TOP COATS BLACK PAINT.

ORNAMENTAL RAILING OFF THE BRIDGE

N.T.S.

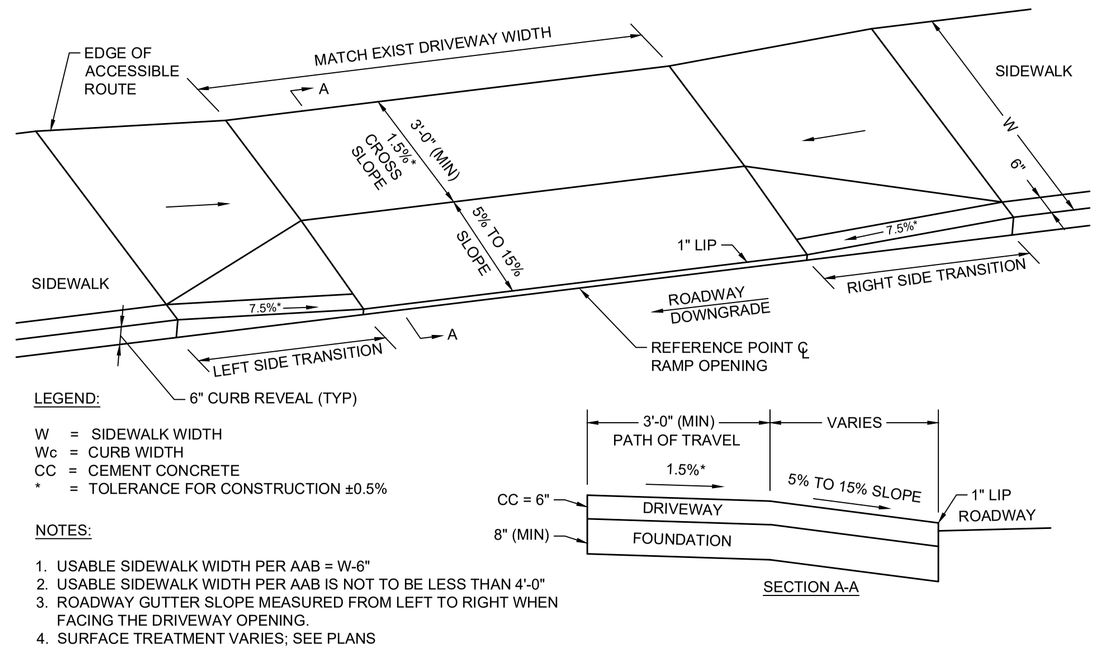

LEGEND:

W = SIDEWALK WIDTH
Wc = CURB WIDTH
CC = CEMENT CONCRETE
* = TOLERANCE FOR CONSTRUCTION ±0.5%

NOTES:

1. USABLE SIDEWALK WIDTH PER AAB = W-6"
2. USABLE SIDEWALK WIDTH PER AAB IS NOT TO BE LESS THAN 4'-0"
3. ROADWAY GUTTER SLOPE MEASURED FROM LEFT TO RIGHT WHEN FACING THE DRIVEWAY OPENING.
4. SURFACE TREATMENT VARIES; SEE PLANS

SIDEWALK THROUGH DRIVEWAY TYPE A

N.T.S.

DRIVEWAY DATA													
DWY #	BASELINE REFERENCE	STATION	OFFSET	DRIVEWAY SURFACE	DWY WIDTH @ GUTTER	ROADWAY GUTTER SLOPE	WIDTH OF ACCESSIBLE ROUTE	LEFT SIDE			RIGHT SIDE		
								LENGTH	CURB REVEAL	SW WIDTH	LENGTH	CURB REVEAL	SW WIDTH
(1)	LOWELL STREET	11+25	20' LT	CEM CONC	15'	-2.83%	5'-0"	5'-6"	3"	7'-4"	3'-3"	3"	7'-4"

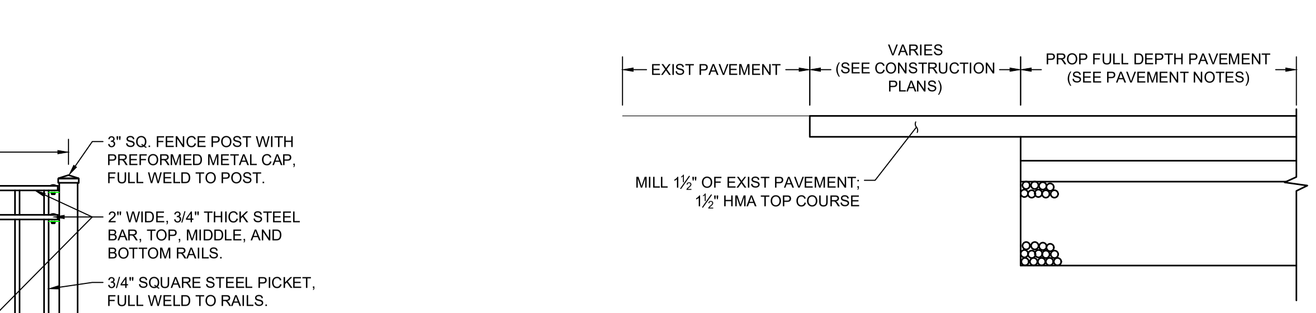

FULL DEPTH PAVEMENT TRANSITION

N.T.S.

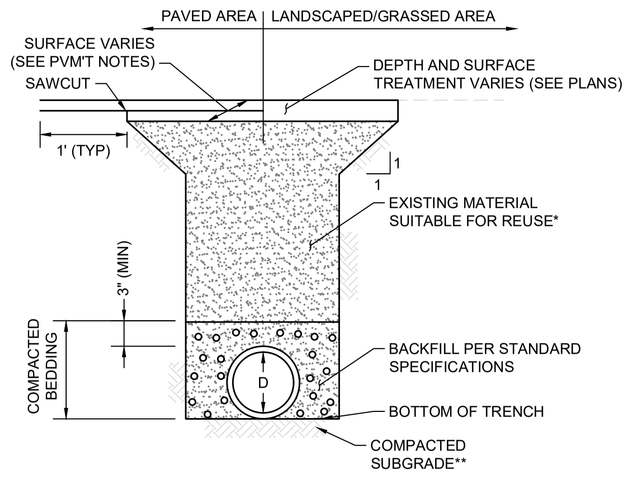

NOTES:

* EXISTING MATERIAL OBTAINED FROM EXCAVATION THAT IS DETERMINED TO BE SUITABLE, AND APPROVED BY THE ENGINEER SHALL BE USED. BACKFILL SHALL BE PLACED IN LAYERS NO MORE THAN 6" IN DEPTH AND THOROUGHLY COMPACTED. BACKFILLING TO A POINT 2' OVER THE PIPE SHALL CONTAIN NO STONES LARGER THAN 3".

**SOFT OR UNSUITABLE MATERIAL EXISTING BELOW THE REQUIRED BEDDING GRADE SHALL BE REMOVED AS DIRECTED AND REPLACED WITH SAND, GRAVEL, CRUSHED STONE OR OTHER SUITABLE MATERIAL AND THOROUGHLY COMPACTED.

UTILITY TRENCH

N.T.S.

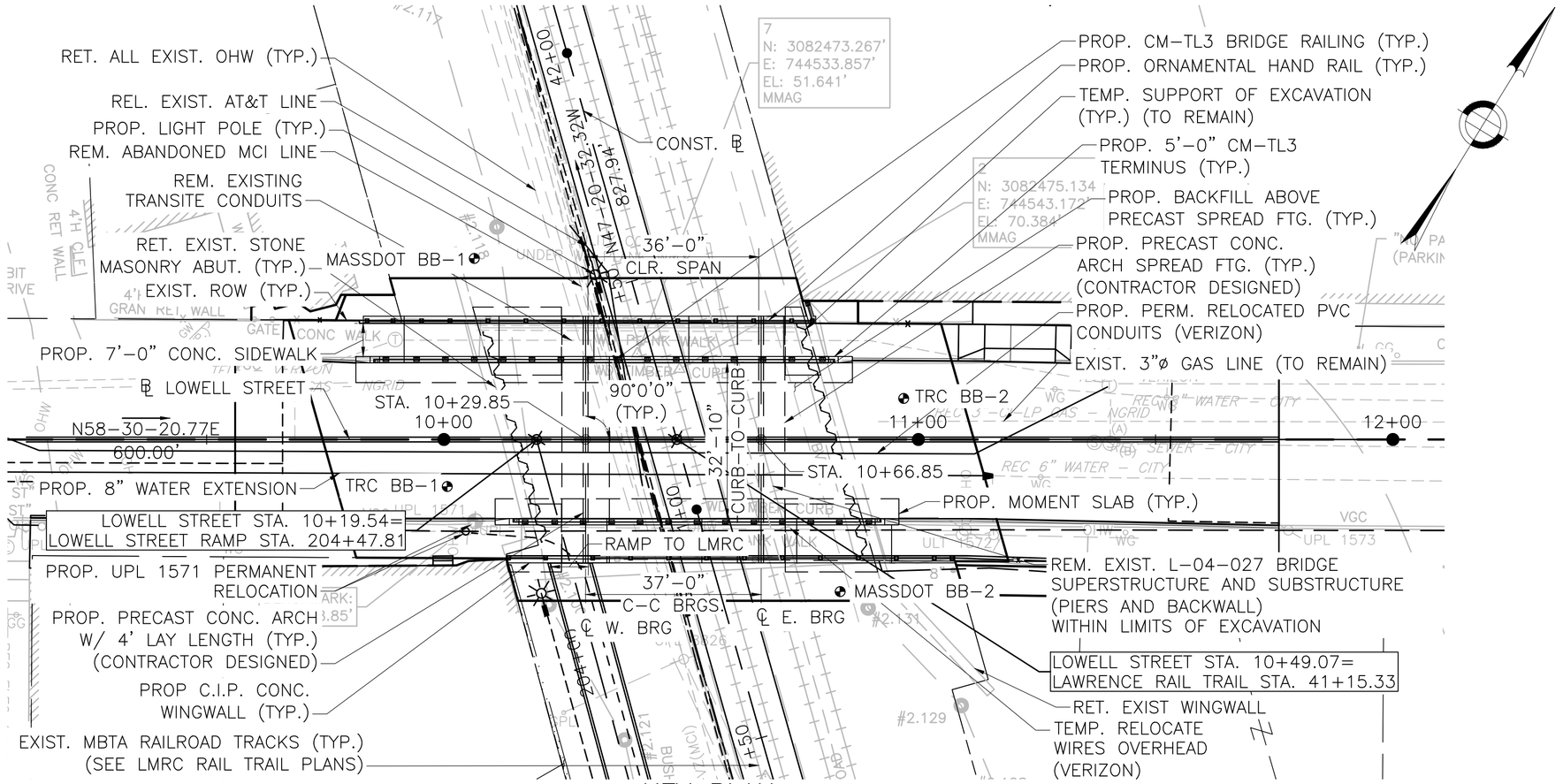

KEY PLAN
SCALE: 1"=20'

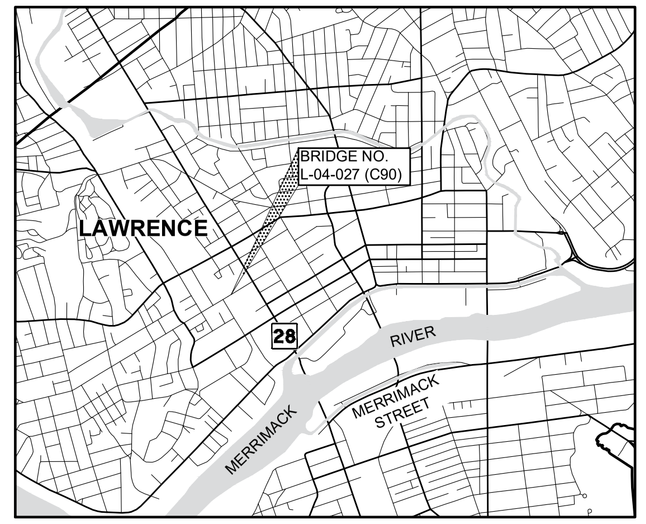

LOCUS MAP
SCALE: 1"=2000'

LAWRENCE
LOWELL ST OVER LMRC RAIL TRAIL

STATE	FED. AID PROJ. NO.	SHEET NO.	TOTAL SHEETS
MA	-	12	26
PROJECT FILE NO.	608930		

KEY PLAN, PROFILES, LOCUS, & INDEX

INDEX OF SHEETS

SHEET NUMBER	SHEET TITLE
1	KEY PLAN, PROFILES, LOCUS, & INDEX
2	GENERAL NOTES
3	BORING LOGS (1 OF 4)
4	BORING LOGS (2 OF 4)
5	BORING LOGS (3 OF 4)
6	BORING LOGS (4 OF 4)
7	PLAN AND ELEVATION
8	WINGWALL DETAILS (1 OF 2)
9	WINGWALL DETAILS (2 OF 2)
10	SUPERSTRUCTURE DETAILS
11	MISCELLANEOUS DETAILS
12	CM-TL3 RAILING DETAILS
13	CM-TL3 TERMINUS DETAILS

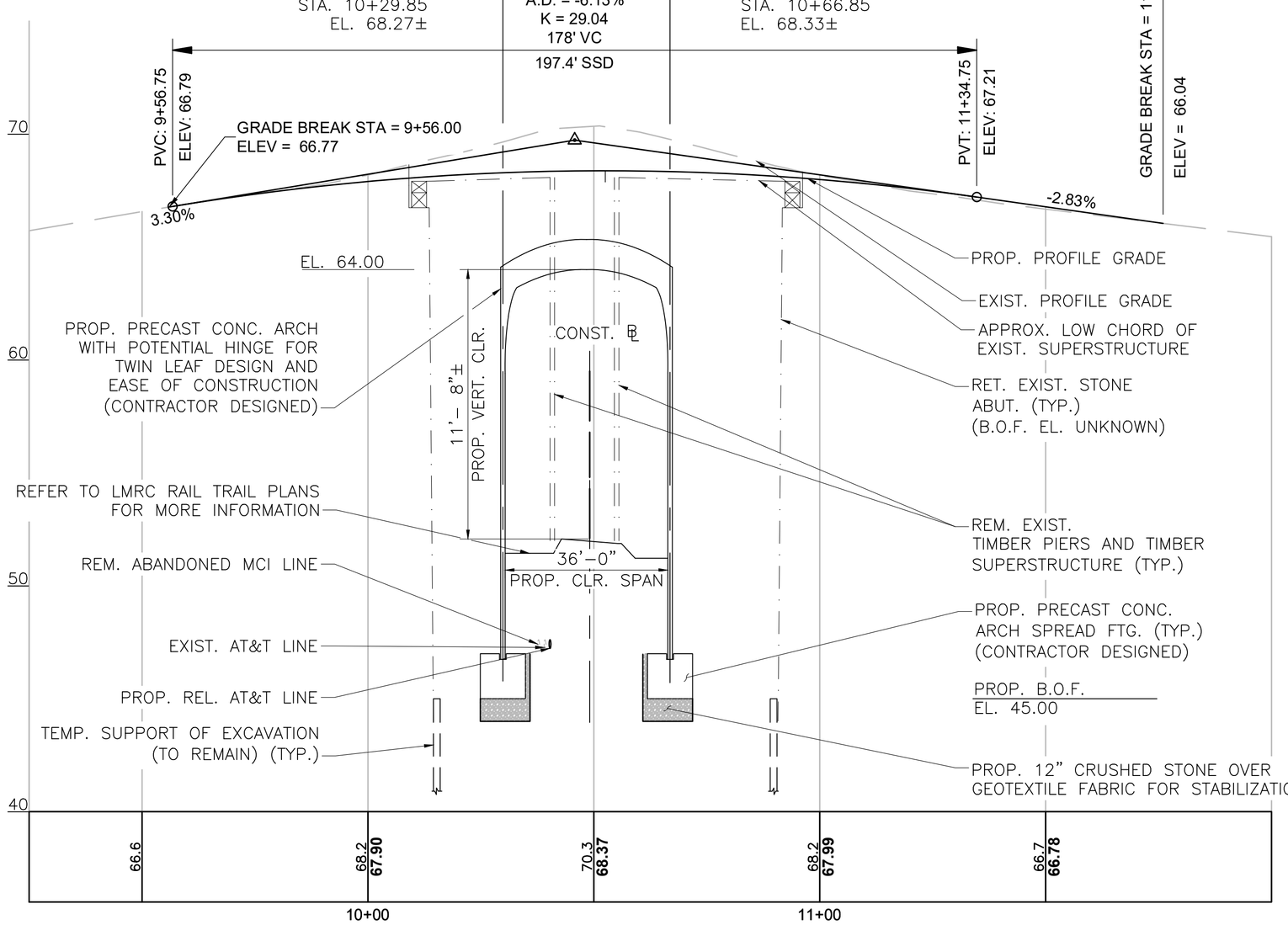

LOWELL STREET PROFILE
HORIZONTAL SCALE: 1"=20'
VERTICAL SCALE: 1"=4'

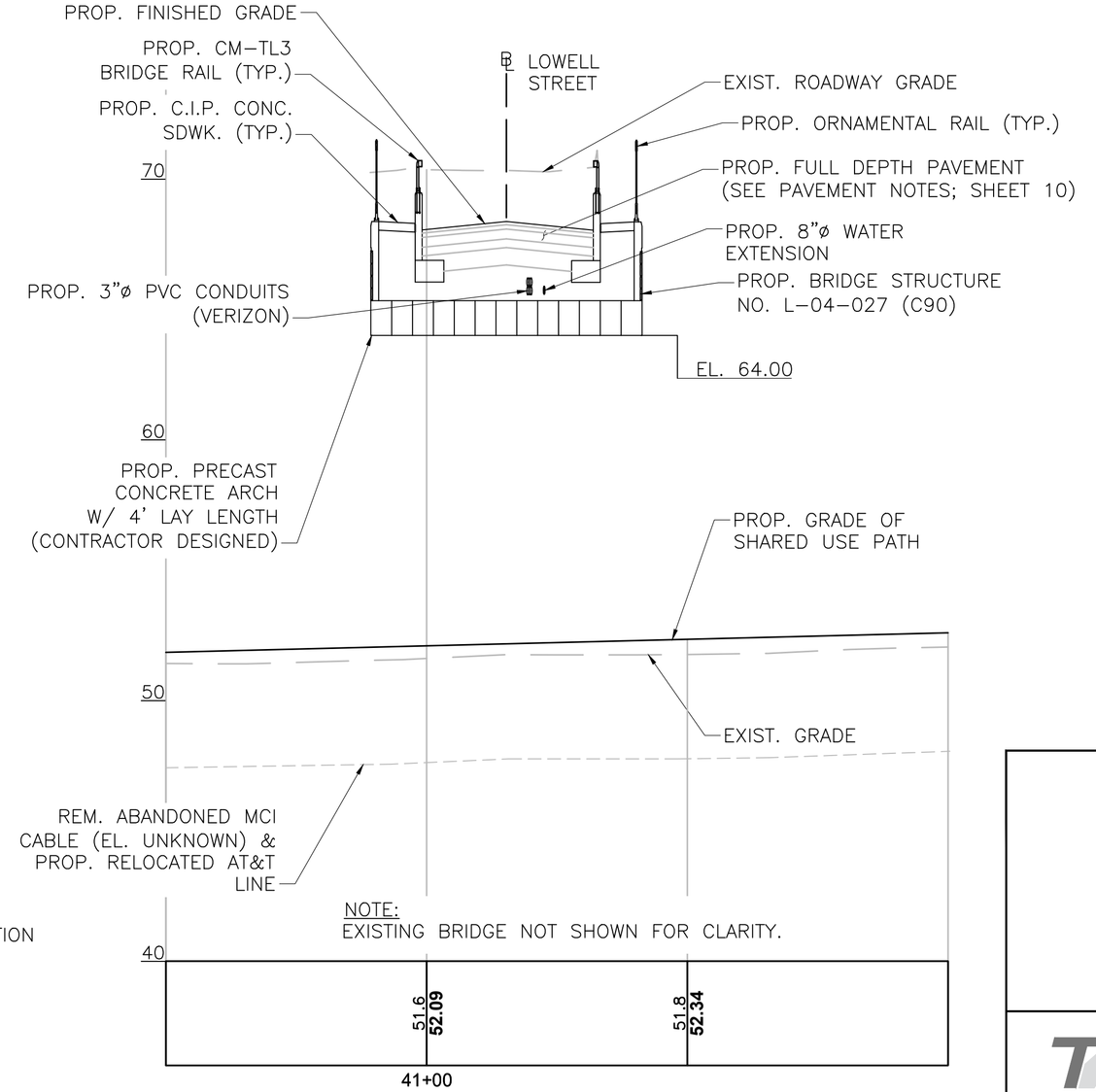

LMRC RAIL TRAIL PROFILE
HORIZONTAL SCALE: 1"=20'
VERTICAL SCALE: 1"=4'

10/28/2022	FIRST STRUCTURAL SUBMITTAL

massDOT Massachusetts Department of Transportation Highway Division

PROPOSED BRIDGE

LAWRENCE

LOWELL STREET
OVER LMRC RAIL TRAIL

MASSACHUSETTS DEPARTMENT OF TRANSPORTATION
HIGHWAY DIVISION
10 PARK PLAZA BOSTON, MASS

TEC The Engineering Corp
282 Merrimack Street, Second Floor
Lawrence, MA 01843
978-794-1792

STATE BRIDGE ENGINEER

CHIEF ENGINEER

SHEET 1 OF 13 SHEETS BRIDGE NO. L-04-027 (C90)

608930_BR1 (L04027).DWG Plotted on 28-Oct-2022 1:05 PM

FIRST STRUCTURAL SUBMITTAL (S1) 10/28/2022

Proposal No. 608930-128034

A00860 - 101

LAWRENCE
LOWELL ST OVER LMRC RAIL TRAIL

STATE	FED. AID PROJ. NO.	SHEET NO.	TOTAL SHEETS
MA	-	13	26
PROJECT FILE NO.	608930		

GENERAL NOTES

DESIGN:

IN ACCORDANCE WITH THE 2020 AASHTO LRFD BRIDGE DESIGN SPECIFICATIONS FOR HL-93 LOADING.

ALL WORK UNDER THIS CONTRACT SHALL BE DONE IN CONFORMANCE WITH THE 2021 STANDARD SPECIFICATIONS FOR HIGHWAYS AND BRIDGE, THE 2017 CONSTRUCTION STANDARD DETAILS, THE TRAFFIC MANAGEMENT PLANS AND DETAIL DRAWINGS, MASSDOT WORK ZONE SAFETY TEMPORARY TRAFFIC CONTROL, THE 1990 STANDARD DRAWINGS FOR SIGNS AND SUPPORTS; THE 2015 OVERHEAD SIGNAL STRUCTURE AND FOUNDATION STANDARD DRAWINGS, THE 2009 MANUAL ON UNIFORM TRAFFIC CONTROL DEVICES (MUTCD) WITH MASSACHUSETTS AMENDMENTS; THE 1968 STANDARD DRAWINGS FOR TRAFFIC SIGNALS AND HIGHWAY LIGHTING; THE AMERICAN STANDARD FOR NURSERY STOCK; THE PLANS AND SPECIAL PROVISIONS.

SURVEY BENCHMARKS:

BENCHMARK 1: MMAG (POINT #7)
N: 3082473.267'
E: 744533.857'
ELEVATION= 51.641'

BENCHMARK 2: MMAG (POINT #2)
N: 3082475.134'
E: 744543.172'
ELEVATION= 70.384'

ELEVATIONS ARE BASED ON THE NORTH AMERICAN VERTICAL DATUM (NAVD) OF 1988.

DATE:
TO BE PLACED ON THE OF THE CM-TL3 END TERMINUS. THE DATE USED SHALL BE THE LATEST YEAR OF CONTRACT COMPLETION AS OF THE DATE THE FIRST CM-TL3 END TERMINUS IS CONSTRUCTED. BOTH CM-TL3 END TERMINUS' SHALL FEATURE THE SAME DATE.

SCALES:
SCALES NOTED ON THE PLANS ARE NOT APPLICABLE TO REDUCED SIZE PRINTS. DIVIDE SCALES BY 2 FOR HALF-SIZE PRINTS (A3).

FOUNDATIONS:
FOUNDATIONS MAY BE ALTERED, IF NECESSARY TO SUIT CONDITIONS ENCOUNTERED DURING CONSTRUCTION WITH THE APPROVAL OF THE ENGINEER.

REFER TO THE GEOTECHNICAL REPORT PREPARED BY TRC ENVIRONMENTAL DATED SEPTEMBER 2020, WITH DECEMBER 2021 REVISIONS.

UNSUITABLE MATERIAL:
ALL UNSUITABLE MATERIAL SHALL BE REMOVED WITHIN THE LIMITS OF THE FOUNDATIONS OF THE STRUCTURE, AS DIRECTED BY THE ENGINEER.

ANCHOR BOLTS:

ALL ANCHOR BOLT SHALL BE SET BY TEMPLATE BEFORE CONCRETE IS PLACED.

CONCRETE:

PRECAST ELEMENTS:

THE FABRICATOR IS RESPONSIBLE FOR THE DESIGN AND INSTALLATION OF LIFT HOOKS FOR ALL PRECAST ELEMENTS. UNDER NO CIRCUMSTANCES WILL THE REBAR ELEMENTS SHOWN ON THE PLAN BE USED TO LIFT THE PRECAST ELEMENTS. FOR ADDITIONAL REQUIREMENT, REFER TO THE "PRECAST CONCRETE ELEMENTS" PORTION OF THE ITEM 995.1 IN THE SPECIAL PROVISIONS.

PRECAST CONCRETE:
5000 PSI, $\frac{3}{4}$", 685 HP CEMENT CONCRETE: CULVERT, CULVERT FOOTINGS, AND HEADWALLS

CAST-IN-PLACE CONCRETE:
5000 PSI, $\frac{3}{4}$", 685 HP CEMENT CONCRETE: SIDEWALKS, CONCRETE FOR CM-TL3 RAILING AND TERMINUS
4000 PSI, $1\frac{1}{2}$", 565 CEMENT CONCRETE: MOMENT SLAB, WINGWALL FOOTINGS, AND WINGWALL STEMS

REINFORCEMENT:

REINFORCING STEEL SHALL BE EPOXY COATED AND CONFORM TO THE REQUIREMENTS OF AASHTO M 31 GRADE 60. UNLESS OTHERWISE NOTED ON THE CONSTRUCTION DRAWINGS, ALL BARS SHALL BE LAPPED AS FOLLOWS:

MODIFICATION CONDITION:	#4 BARS	#5 BARS	#6 BARS
1. NONE	16"	19"	23"
2. 12" OF CONCRETE BELOW BAR	20"	25"	30"
3. EPOXY COATED BARS, COVER < 3db, OR CLEAR SPACING < 6db	23"	29"	34"
4. COATED BARS, ALL OTHER CASES	18"	23"	27"
5. CONDITION 2. AND 3.	26"	32"	39"
6. CONDITION 2. AND 4.	24"	30"	36"

ALL OTHER BARS SHALL BE LAPPED AS SHOWN ON THE CONSTRUCTION DRAWINGS.

TRAFFIC:
THE BRIDGE WILL BE CLOSED TO VEHICULAR TRAFFIC DURING ALL PHASES OF DEMOLITION AND CONSTRUCTION. VEHICULAR TRAFFIC WILL BE DETOURED AS SHOWN ON THE PLANS.

UTILITIES:
DURING CONSTRUCTION, THE CONTRACTOR SHALL LOCATE AND PROTECT FROM DAMAGE ALL UTILITIES THAT ARE TO REMAIN IN PLACE. UTILITY POLE RELOCATIONS SHALL BE CLOSELY COORDINATED WITH THE UTILITY OWNERS AND THE ENGINEER.

PAVEMENT MARKINGS:
ALL PAVEMENT MARKINGS SHALL BE THERMOPLASTIC AND SHALL SMOOTHLY TRANSITION INTO THE EXISTING PAVEMENT MARKINGS AT THE PROJECT LIMITS. A MINOR (NEGLIGIBLE) VARIATION IN THE SPECIFIED LANE WIDTHS IS PERMISSIBLE IN ORDER TO MAKE A SMOOTH TRANSITION FROM PROPOSED TO EXISTING PAVEMENT MARKINGS

ESTIMATED QUANTITIES
(NOT GUARANTEED)

ITEM DESCRIPTION	QUANTITY	UNITS
DEMOLITION OF BRIDGE NO. L-04-027 (C90)	1	LS
BRIDGE EXCAVATION	950	CY
GRAVEL BORROW FOR BACKFILLING STRUCTURES AND PIPES	1800	CY
CONTROLLED DENSITY FILL - EXCAVATABLE	10	CY
CRUSHED STONE FOR BRIDGE FOUNDATIONS	70	TON
DENSE GRADED CRUSHED STONE FOR SUB-BASE	2300	TON
GEOTEXTILE FABRIC FOR STABILIZATION	150	SY
TEMPORARY SUPPORT OF EXCAVATION BRIDGE NO. L-04-027 (C90)	1	LS
BRIDGE STRUCTURE, BRIDGE NO. L-04-027 (C90)	1	LS

TRAFFIC DATA	ROADWAY OVER	ROADWAY UNDER
DESIGN YEAR	2041	N/A
AVERAGE DAILY TRAFFIC - PRESENT	6160 VPD	N/A
AVERAGE DAILY TRAFFIC - DESIGN YEAR	9065 VPD	N/A
DESIGN HOURLY VOLUME	745	N/A
DIRECTIONAL DISTRIBUTION	60.6%	N/A
TRUCK PERCENTAGE - AVERAGE DAY	2.0%	N/A
TRUCK PERCENTAGE - PEAK HOUR	2.0%	N/A
DESIGN SPEED	35 MPH	N/A
DIRECTIONAL DESIGN HOURLY VOLUME	450	N/A

SEISMIC DESIGN CRITERIA	
DESIGN RETURN PERIOD:	1000
DESIGN SPECTRA	
As	0.078
SDs	0.18
SD1	0.068
SITE CLASS	C
SEISMIC DESIGN CATEGORY (SDC)	A

DATE	DESCRIPTION
10/28/2022	FIRST STRUCTURAL SUBMITTAL

THIS SHEET IS APPROVED FOR CONSTRUCTION BY MASSDOT
AUTHORIZED SIGNATORY: _____ STATE BRIDGE ENGINEER
USE ONLY PRINTS OF LATEST DATE

FIRST STRUCTURAL SUBMITTAL (S1) 10/28/2022

608930_BR2-6 (L04027).DWG Plotted on 28-Oct-2022 1:05 PM

Proposal No. 608930-128034

A00860 - 102

BORING 1 (TRC BB–1)

EXIST. GROUND SURFACE EL. = 68.0

EL. = 60.0

OBS. GROUNDWATER (1/15/19) EL. = 50.0

PROP. BOT. OF ARCH & WINGWALL FTGS. EL. = 45.0

EL. = 40.0

EL. = 30.0

EL. = 20.0

SOIL BORING LOG — **BORING NO. TRC - BB - 1** — Page 1 of 5

Facility/Project Name:	Boring Location:	Surface Elev. (ft):	Total Depth (ft bgs):	Borehole Dia. (in):
Lowell Street Bridge -Lawrence, MA	N: 3082429.6 E: 744512.8	68.0	114.0	4.25
Drilling Firm: GeoSearch Drilling	**Drilling Method:** HSA / Wash and Drive with 3" Casing SPT w/ Automatic Hammer	**Personnel:** Logged By - S. Sullivan Driller - R. Dean	**Date Started:** 10/9/18	**Date Completed:** 1/15/19	**Water Depth (ft bgs):** ~18

SAMPLE NUMBER AND TYPE	RECOVERY (%)	BLOW COUNTS	DEPTH IN FEET	LITHOLOGIC DESCRIPTION	USCS	GRAPHIC LOG	N VALUE (BLOWS)	DENSITY (PCF)	COMPRESSIVE STRENGTH (TSF)	MOISTURE CONTENT (%)	LIQUID LIMIT	PLASTICITY INDEX	P 200 (%)	COMMENTS
1 SS	50	2 4 4 5		Bituminous Pavement, ~ 1-foot thick brown, loose, fine to coarse **SAND**, trace gravel, dry, fill										
2 SS	25	11 7 4 5	5	top 3 inches: gray, medium dense **CONCRETE**, dry, fill brown, medium dense, fine to coarse **SAND**, some gravel, dry, fill										
3 SS	54	1 1 1 1		brown, very loose, fine to coarse **SAND**, some gravel, moist, fill brown, very loose, fine **SAND**, dry, fill										
4 SS	25	3 1 1 1		brown, very loose, fine **SAND**, some gravel, dry, fill						6.2			14.9	
5 SS	8	3 1 2 1	10	brown, very loose, fine **SAND**, trace gravel, dry, fill										
6 SS	42	4 3 8 3		brown, medium dense, fine **SAND**, some gravel, dry, fill cobbles ~13 to ~15 ft bgs, fill										
7 SS	54	2 3 8 11	15	brown, medium dense, fine **SAND**, trace gravel, moist, fill brown, medium dense, fine to coarse **SAND**, some gravel, moist, fill										
8 SS	58	13 18 31 43		brown, medium dense, fine **SAND**, wet, fill brown, dense, fine **SAND AND SILT**, some gravel, trace weathered rock, wet, till						10.6			36.8	
			20											

Checked By:	Date:	Approved By:	Date:	Firm:
Z. Bauman	8/11/20			TRC 2 Liberty Square, 6th Floor, Boston, MA Boston, MA 02109 Fax

SOIL BORING LOG — **BORING NO. TRC - BB - 1** — Page 2 of 5

SAMPLE NUMBER AND TYPE	RECOVERY (%)	BLOW COUNTS	DEPTH IN FEET	LITHOLOGIC DESCRIPTION	USCS	GRAPHIC LOG	N VALUE (BLOWS)	DENSITY (PCF)	COMPRESSIVE STRENGTH (TSF)	MOISTURE CONTENT (%)	LIQUID LIMIT	PLASTICITY INDEX	P 200 (%)	COMMENTS
9 SS	100	30 47 70 90	25	brown, very dense, fine **SAND**, some silt, trace gravel, dry, till			117			7.7			46.9	
10 SS	9	50/.5 - - -	30	Auger refusal at 28.5 ft bgs SPT Refusal at 29.0 ft bgs Core through boulder 28.5 to 29.5 ft bgs. Drive casing to 34 ft bgs										
11 SS	90	48 57 55 69	35	brown, very dense, fine **SAND AND SILT**, some gravel, dry			112							
12 SS	54	24 33 100/5 -	40	brown, very dense, coarse **SAND**, moist to wet			97							
13 SS	58	41 80 100/5 -	45	brown, very dense, fine **SAND**, trace gravel, some silt, moist			121							End of Boring at 46 ft bgs on 10/09/2018 Drive casing to 49 ft bgs and continue boring from 01/14/2019 to 01/15/2019; Drill open hole below 49 ft bgs
14 SS	11"	100/4 - - -	50	light brown, very dense, fine **SAND**, trace gravel, some silt, wet										

BORING 1 (TRC BB–1) CONT.

EL. = 10.0

EL. = 00.0

EL. = −10.0

EL. = −20.0

EL. = −30.0

EL. = −40.0

SOIL BORING LOG — **BORING NO. TRC - BB - 1** — Page 3 of 5

SAMPLE NUMBER AND TYPE	RECOVERY (%)	BLOW COUNTS	DEPTH IN FEET	LITHOLOGIC DESCRIPTION	USCS	GRAPHIC LOG	N VALUE (BLOWS)	DENSITY (PCF)	COMPRESSIVE STRENGTH (TSF)	MOISTURE CONTENT (%)	LIQUID LIMIT	PLASTICITY INDEX	P 200 (%)	COMMENTS
16 SS	92	33 47 58 59	55	light brown, very dense, coarse **SAND**, trace gravel, trace silt, moist			105							
17 SS	75	59 75 72 100/4	60	brown, very dense, fine **SAND**, trace gravel, moist			147							
18 SS	75	30 28 74 100/4	65	brown, very dense, fine **SAND**, some gravel, some silt, moist			102							
19 SS	13	100/3 - - -	70	brown to black, very dense, fine **SAND**, trace silt, moist										
20 SS	33	90 100/3 - -	75	light brown, very dense, fine **SAND**, trace gravel, some silt, moist			100							
21 SS	167	44 74 76	80	brown, very dense, fine **SAND**, moist			150							

SOIL BORING LOG — **BORING NO. TRC - BB - 1** — Page 4 of 5

SAMPLE NUMBER AND TYPE	RECOVERY (%)	BLOW COUNTS	DEPTH IN FEET	LITHOLOGIC DESCRIPTION	USCS	GRAPHIC LOG	N VALUE (BLOWS)	DENSITY (PCF)	COMPRESSIVE STRENGTH (TSF)	MOISTURE CONTENT (%)	LIQUID LIMIT	PLASTICITY INDEX	P 200 (%)	COMMENTS
		100/4												
22 SS	88	46 70 78 87	85	brown, very dense, fine **SAND**, trace silt, moist			148							
23 SS	42	55 100/4 - -	90	brown, very dense, fine **SAND**, some gravel, trace silt, moist			100							
24 SS	46	50 100/5 - -	95	brown, very dense, fine **SAND**, trace silt, moist			100							
25 SS	42	87 100/1 - -	100	brown, very dense, fine **SAND**, some silt, trace clay, moist			100							
26 RC	24 RQD 100		105	moderately hard, fresh, slightly to moderately fractured, gray to dark gray, fine to very fine grained, **QUARTZITE**, thin horizontal bedded, shallow dipping fractures; RQD = 52%										Roller bit to 104 ft bgs and start coring Rock coring with NQ-2 core barrel 1.2 minutes / foot 1.3 minutes / foot 2.2 minutes / foot 2.2 minutes / foot 2.1 minutes / foot

BORING 1 (TRC BB–1) CONT.

EL. = −50.0

EL. = −30.0

SOIL BORING LOG — **BORING NO. TRC - BB - 1** — Page 5 of 5

SAMPLE NUMBER AND TYPE	RECOVERY (%)	BLOW COUNTS	DEPTH IN FEET	LITHOLOGIC DESCRIPTION	USCS	GRAPHIC LOG	N VALUE (BLOWS)	DENSITY (PCF)	COMPRESSIVE STRENGTH (TSF)	MOISTURE CONTENT (%)	LIQUID LIMIT	PLASTICITY INDEX	P 200 (%)	COMMENTS
25 RC	100		110	hard, fresh, slightly to moderately fractured, gray to dark gray, very fine grained, **META SILTSTONE**, thin horizontal bedded, shallow dipping fractures; RQD = 75%										1.8 minutes / foot 3.6 minutes / foot 2.8 minutes / foot 2.6 minutes / foot 3.1 minutes / foot
			115	BORING TERMINATED AT 114' BGS.										
			120											
			125											
			130											
			135											

LAWRENCE
LOWELL ST OVER LMRC RAIL TRAIL

STATE	FED. AID PROJ. NO.	SHEET NO.	TOTAL SHEETS
MA	-	14	26
PROJECT FILE NO.		608930	

BORING LOGS (1 OF 4)

BORING NOTES:

1. LOCATION OF BORINGS SHOWN ON THE PLANS THUS: ◔
2. BORINGS ARE TAKEN FOR THE PURPOSE OF DESIGN AND SHOW CONDITIONS AT BORING POINTS ONLY, BUT DO NOT NECESSARILY SHOW THE NATURE OF THE MATERIALS TO BE ENCOUNTERED DURING CONSTRUCTION.
3. WATER LEVELS SHOWN ON THE BORING LOGS WERE OBSERVED AT THE TIME OF TAKING BORINGS AND DO NOT NECESSARILY SHOW THE TRUE GROUND WATER LEVEL.
4. FIGURES IN COLUMNS INDICATE NUMBER OF BLOWS REQUIRED TO DRIVE A 1 3/8" I.D. SPLIT SPOON SAMPLER 6" USING A 140 POUND WEIGHT FALLING 30".
5. BORING SAMPLES ARE STORED AT A STORAGE FACILITY LOCATED ON ROUTE 114 (219 WINTHROP AVE.) IN LAWRENCE, MA. THE CONTRACTOR MAY EXAMINE THE SOIL AND ROCK SAMPLES BY CONTACTING THE MASSDOT GEOTECHNICAL SECTION AT 10 PARK PLAZA, BOSTON, MA.
6. BORINGS TRC BB–1 AND TRC BB–2 WERE BEGUN IN OCTOBER 2018 AND FINISHED IN JANUARY 2019 TO OBTAIN BEDROCK CORES.
7. BORINGS TRC BB–1 AND TRC BB–2 WERE MADE BY GEOSEARCH DRILLING, 11 CHOCKSETT ROAD, STERLING, MA 01564.
8. THE NORTH AMERICAN VERTICAL DATUM (NAVD) OF 1988 IS USED THROUGHOUT.

10/28/2022	FIRST STRUCTURAL SUBMITTAL
DATE	DESCRIPTION

THIS SHEET IS APPROVED FOR CONSTRUCTION BY MASSDOT
AUTHORIZED SIGNATORY: _____ STATE BRIDGE ENGINEER
USE ONLY PRINTS OF LATEST DATE

SHEET 3 OF 13 SHEETS BRIDGE NO. L–04–027 (C90)

608930_BR2-6 (L04027).DWG Plotted on 28-Oct-2022 1:05 PM
Proposal No. 608930-128034
FIRST STRUCTURAL SUBMITTAL (S1) 10/28/2022
A00860 - 103

EXIST. GROUND SURFACE
EL. = 68.0

EL. = 60.0

EL. = 50.0

OBS. GROUNDWATER (1/17/19)
EL. = 48.0

PROP. BOT. OF ARCH & WINGWALL FTGS.
EL. = 45.0

EL. = 40.0

EL. = 30.0

EL. = 20.0

EL. = 10.0

EL. = 00.0

EL. = −10.0

EL. = −20.0

EL. = −30.0

EL. = −40.0

SOIL BORING LOG — BORING NO. TRC - BB - 2

Page 1 of 4

Facility/Project Name:	Boring Location:	Surface Elev. (ft):	Total Depth (ft bgs):	Borehole Dia. (in):
Lowell Street Bridge - Lawrence, MA	N: 3082494.4 E: 744587.1	68.0	97.0	
Drilling Firm:	**Drilling Method:**	**Personnel:**	**Date Started:**	**Date Completed:**
GeoSearch Drilling	HSA / Wash and Drive with 3" Casing SPT w/ Automatic Hammer	Logged By - S. Sullivan Driller - R. Dean	10/10/18	1/17/19

Water Depth (ft bgs): ~20

SAMPLE NUMBER AND TYPE	RECOVERY (%)	BLOW COUNTS	DEPTH IN FEET	LITHOLOGIC DESCRIPTION	USCS	GRAPHIC LOG	N VALUE (BLOWS) 0 10 20 30 40 50	DENSITY (PCF)	COMPRESSIVE STRENGTH (TSF)	MOISTURE CONTENT (%)	LIQUID LIMIT	PLASTICITY INDEX	P 200 (%)	COMMENTS
1 SS	90	7 9 32 15 12	0	Bituminous Pavement: ~ 1-foot thick brown, dense, coarse **SAND**, some gravel, dry (fill)										
2 SS	54	11 10 7 5		brown, dense, fine to coarse **SAND**, trace gravel, dry (fill) brown, medium dense, fine to coarse **SAND**, trace gravel (fill)										
3 SS	63	3 3 4 10	5	brown, loose, fine **SAND**, trace gravel, dry, (fill)										
4 SS	29	5 6 5 6		gray, medium dense, fine to coarse **SAND**, some gravel, dry, (fill)						8.7			39.3	
5 SS	46	6 6 7 8		brown, medium dense, fine **SAND**, some gravel, dry, (fill)										
6 SS	46	- 41 19 15	10	brown, very dense, fine to coarse **SAND**, trace gravel, trace silt, moist										
7 SS	92	14 19 18 17		brown, dense, fine to coarse **SAND**, some gravel, trace silt, wet brown, dense, fine **SAND**, trace gravel, trace silt, moist						10.9			40.8	
8 SS	75	15 18 22 42	15 20	brown, dense, fine to coarse **SILT**, trace gravel, trace sand, moist, (till) brown, dense, coarse **SAND AND SILT**, trace gravel, moist, (till)										

GEOTECH LOG_LAWRENCE BRIDGE.GPJ 8/11/20

Checked By:	Date:	Approved By:	Date:	Firm:
Z. Bauman	8/11/20			TRC 2 Liberty Square, 6th Floor, Boston, MA Boston, MA 02109 Fax

SOIL BORING LOG — BORING NO. TRC - BB - 2

Page 2 of 4

SAMPLE NUMBER AND TYPE	RECOVERY (%)	BLOW COUNTS	DEPTH IN FEET	LITHOLOGIC DESCRIPTION	USCS	GRAPHIC LOG	N VALUE (BLOWS) 0 10 20 30 40 50	DENSITY (PCF)	COMPRESSIVE STRENGTH (TSF)	MOISTURE CONTENT (%)	LIQUID LIMIT	PLASTICITY INDEX	P 200 (%)	COMMENTS
9 SS	50	35 75 35 72	25	brown, very dense **SILT**, some gravel, moist, (till) brown, very dense **GRAVEL**, some coarse sand, trace silt, wet, (till)						11.8			31.2	
10 SS	79	28 49 51 71	30	brown, very dense **SILT**, some gravel, trace sand, moist, (till)										
11 SS	33	28 100/1.5 - -	35	brown, very dense **SILT**, trace gravel, moist, (till)										
12 SS	71	18 31 35 35	40	brown, very dense, coarse **SAND**, moist										
13 SS	63	61 100 100/4.5 -	45	gray, very dense **GRAVEL**, wet brown, very dense, coarse **SAND**, trace gravel, some silt, moist										
14 SS	54	46 62 100/5.5 -	50	brown, very dense, fine **SAND**, trace silt, moist										

GEOTECH LOG_LAWRENCE BRIDGE.GPJ 8/11/20

SOIL BORING LOG — BORING NO. TRC - BB - 2

Page 3 of 4

SAMPLE NUMBER AND TYPE	RECOVERY (%)	BLOW COUNTS	DEPTH IN FEET	LITHOLOGIC DESCRIPTION	USCS	GRAPHIC LOG	N VALUE (BLOWS) 0 10 20 30 40 50	DENSITY (PCF)	COMPRESSIVE STRENGTH (TSF)	MOISTURE CONTENT (%)	LIQUID LIMIT	PLASTICITY INDEX	P 200 (%)	COMMENTS
15 SS	42	62 100 100/4 -	55	brown, very dense, fine **SAND**, trace silt, moist										
16 SS	63	44 66 100/5.5 -	60	brown, very dense, fine **SAND**, trace silt, moist brown, very dense, fine **SILT**, trace gravel, moist										
17 SS	33	78 100/4 - -	65	brown, very dense, fine **SAND**, trace silt, moist										
18 SS	38	66 100/4 - -	70	brown, very dense, fine **SAND**, trace silt, moist, (till)										
19 SS	33	100 100/2 - -	75	gray, very dense, fine **SILT**, some gravel, some sand, moist, (till)										
20 SS	58	35 85 100/4	80	gray, very dense **SILT**, trace gravel, some fine sand, moist										

GEOTECH LOG_LAWRENCE BRIDGE.GPJ 8/11/20

SOIL BORING LOG — BORING NO. TRC - BB - 2

Page 4 of 4

SAMPLE NUMBER AND TYPE	RECOVERY (%)	BLOW COUNTS	DEPTH IN FEET	LITHOLOGIC DESCRIPTION	USCS	GRAPHIC LOG	N VALUE (BLOWS) 0 10 20 30 40 50	DENSITY (PCF)	COMPRESSIVE STRENGTH (TSF)	MOISTURE CONTENT (%)	LIQUID LIMIT	PLASTICITY INDEX	P 200 (%)	COMMENTS
		- -	85											Rock coring with NQ-2 core barrel
21 RC	75		90	hard, fresh, slightly to moderately fractured, gray to dark gray, fine to very fine grained, **META SILTSTONE**, thin to medium bedding, moderately dipping joints; RQD = 45%										0.8 minutes / foot 2.5 minutes / foot 2.9 minutes / foot
22 RC	98		95	hard, fresh, slightly to moderately fractured, gray to dark gray, very fine grained, **META SILTSTONE**, thin to medium bedding, moderately dipping joints; RQD = 48%				168	1200					2.1 minutes / foot 2.9 minutes / foot 1.1 minutes / foot 2.1 minutes / foot 2.1 minutes / foot 2.0 minutes / foot 3.5 minutes / foot
			100	BORING TERMINATED AT 97' BGS.										
			105											

GEOTECH LOG_LAWRENCE BRIDGE.GPJ 8/11/20

BORING NOTES:

1. SEE BORING NOTES ON SHEET 3.

LAWRENCE
LOWELL ST OVER LMRC RAIL TRAIL

STATE	FED. AID PROJ. NO.	SHEET NO.	TOTAL SHEETS
MA	-	15	26
PROJECT FILE NO.	608930		

BORING LOGS (2 OF 4)

608930_BR2-6 (L04027).DWG Plotted on 28-Oct-2022 1:06 PM

Proposal No. 608930-128034

10/28/2022	FIRST STRUCTURAL SUBMITTAL
DATE	DESCRIPTION

THIS SHEET IS APPROVED FOR CONSTRUCTION BY MASSDOT
AUTHORIZED SIGNATORY: _____ STATE BRIDGE ENGINEER
USE ONLY PRINTS OF LATEST DATE

FIRST STRUCTURAL SUBMITTAL (S1) 10/28/2022

LAWRENCE
LOWELL ST OVER LMRC RAIL TRAIL

STATE	FED. AID PROJ. NO.	SHEET NO.	TOTAL SHEETS
MA	-	16	26
PROJECT FILE NO.	608930		

BORING LOGS (3 OF 4)

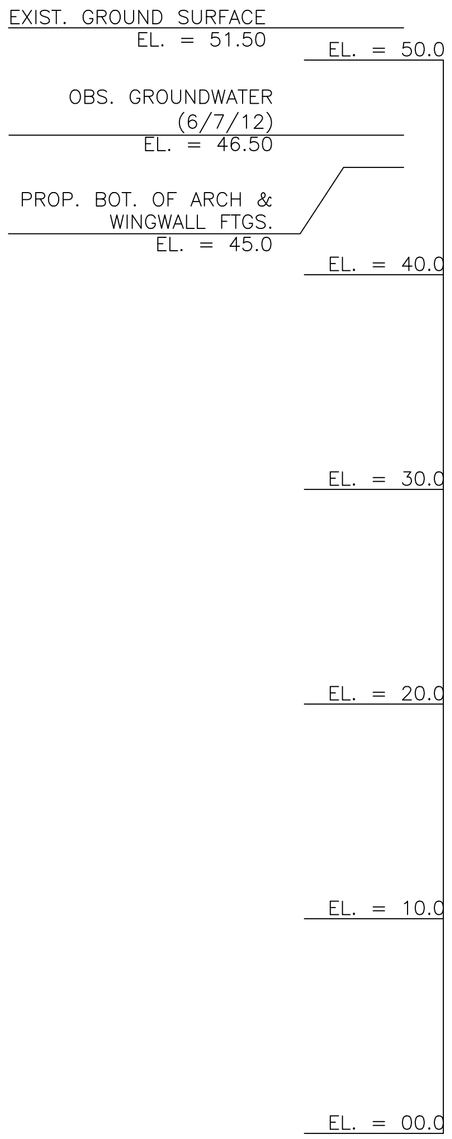

massDOT Highway

NEW HAMPSHIRE BORING, INC.
P.O. Box 165
Derry, NH 03038

Phone: (603)437-1610
Fax: (603) 437-0034
E Mail: nhb@nhboring.com

Boring No. BB-1
Scale 1" = 5'

City/Town: Lawrence	Bridge: L-04-027	Project File No: 604839	Contract No: 57734
Project: Lowell Street over the B&M Railroad		Date & Time Started: 06-04-12 12:00 pm	Total Hours: 26
Groundwater Depth: 5'	Date & Time: 06-07-12 1:00 pm	Date & Time Completed: 06-07-12 1:30 pm	
Coordinates: N 3082472.43 E 744505.92	Driller's Name: Michael Misiaszek	Helper's Name: Shawn Burto	
Ground Elevation: 51.50	Inspector's Name: Cory St. Sauveur	Inspector's Company: Massachusetts Department of Transportation	

Sample Number	Depth Range (Feet)	Blow Counts per 6 Inches Coring Times Minute Per Foot				Recovery Inches	Field Description	Strata Changes
S-1	0' - 2'	4	3	4	7	9"	Wet, loose, dark brown, FINE TO COARSE SAND, some organic silt.	
S-2	4' - 6'	9	11	15	19	15"	Wet, medium dense, gray, FINE TO COARSE SAND, some inorganic silt.	
S-3	9' - 11'	40	40	40	50	20"	Wet, very dense, gray, FINE TO COARSE SAND, some inorganic silt.	
S-4	14' - 15'9"	12	21	35	85/3"	12"	Wet, very dense, gray, FINE TO COARSE SAND, some inorganic silt.	
S-5	19' - 21'	27	31	30	31	17"	Wet, very dense, brown, FINE TO COARSE SAND, some inorganic silt, trace fine gravel.	
S-6	24' - 24'7"	70	50/1"			4"	Wet, very dense, brown, FINE TO COARSE SAND, some inorganic silt.	
S-7	29' - 29'6"	106	14/0"			5"	Wet, very dense, brown, FINE TO COARSE SAND, some inorganic silt.	
S-8	34' - 34'5"	120/5"				5"	Wet, very dense, brown, FINE TO COARSE SAND, some inorganic silt.	
S-9	39' - 39'11"	48	72/5""			7"	Wet, very dense, brown, FINE SAND, some inorganic silt.	
S-10	44' - 45'	55	71			10"	Wet, very dense, brown, FINE SAND, some inorganic silt.	
S-11	49' - 49'7"	65	55/1"			5"	Wet, very dense, brown, FINE SAND, some inorganic silt.	
S-12	54' - 54'10"	33	87/4"			6"	Wet, very dense, brown, FINE SAND, some inorganic silt.	
S-13	59' - 59'5"	120/5"				3"	Wet, very dense, brown, FINE TO COARSE SAND, some inorganic silt, trace fine gravel.	
S-14	64' - 64'10"	37	83/4"			7"	Wet, very dense, brown, FINE SAND, some inorganic silt.	
S-15	69' - 69'7"	95	25/1"			5"	Wet, very dense, brown, FINE SAND, some inorganic silt.	
S-16	74' - 74'10"	52	68/4"			7"	Wet, very dense, brown, FINE SAND, some inorganic silt.	
S-17	79' - 79'6"	123				5"	Wet, very dense, brown, FINE SAND, some inorganic silt.	
							Top of BEDROCK at 83'	83'
C-1	84' - 89'	7	9	12	12	13	60"	Roller bit to 84' and began coring. Hard, gray, slightly weathered, some fratures, APHANITIC SCHIST. Percent Recovery = 100%
C-2	89' - 94'	13	12	14	10	9	60"	Hard, gray, slightly weathered, some fratures, APHANITIC SCHIST. Percent Recovery = 100%
							Bottom of Exploration = 94'	94'

Remarks:
Boring moved prior to drilling from N3082470.57, E744502.92 to N3082472.43, E744505.92 for access constraints (slopes, adjacent structure, etc.) Borings on railroad property and will be grouted upon completion. The moisture content in S-1 and S-2 are wet due to the water introduced during the drilling process.

Protective Device - Stand: Box:
Well Depth: Solid Pipe:
Stick Up Pipe: Screen Pipe:

Penetration Resistance (N) Guide:

Cohesionless Soils (Sands, Gravels)		Cohesive Soils (Silts, Clays)	
Relative Density	Penetration Resistance	Consistency	Penetration Resistance
Very Loose	0 - 4	Very Soft	0 - 2
Loose	4 - 10	Soft	2 - 4
Medium Dense	10 - 30	Medium Stiff	4 - 8
Dense	30 - 50	Stiff	8 - 15
Very Dense	Over 50	Very Stiff	15 - 30
N=Sum of Second and Third 6" Blow Counts		Hard	Over 30

Terms Used for Second Entry of Descriptions: and = 40-50%, some = 10-40%, trace = 10% or less

Type of Drill Rig: CME-750
Arrow-Board: Signs: Cones: 1
Casing HW Size: 4" Depth: 83'6"
Hammer Weight: 300 lbs. Fall: 30"
Sampler Type: S/S Size: 1 3/8"
Automatic Hammer Weight:
Safety Hammer Weight: 140 lbs.
Donut Hammer Weight:
Fall: 30"
Core Barrel Type NX: Size: 2.15"

BORING NOTES:

1. LOCATION OF BORINGS SHOWN ON THE PLANS THUS: ◔
2. BORINGS ARE TAKEN FOR THE PURPOSE OF DESIGN AND SHOW CONDITIONS AT BORING POINTS ONLY, BUT DO NOT NECESSARILY SHOW THE NATURE OF THE MATERIALS TO BE ENCOUNTERED DURING CONSTRUCTION.
3. WATER LEVELS SHOWN ON THE BORING LOGS WERE OBSERVED AT THE TIME OF TAKING BORINGS AND DO NOT NECESSARILY SHOW THE TRUE GROUND WATER LEVEL.
4. FIGURES IN COLUMNS INDICATE NUMBER OF BLOWS REQUIRED TO DRIVE A 1 3/8" I.D. SPLIT SPOON SAMPLER 6" USING A 140 POUND WEIGHT FALLING 30".
5. BORING SAMPLES ARE STORED AT A STORAGE FACILITY LOCATED ON ROUTE 114 (219 WINTHROP AVE.) IN LAWRENCE, MA. THE CONTRACTOR MAY EXAMINE THE SOIL AND ROCK SAMPLES BY CONTACTING THE MASSDOT GEOTECHNICAL SECTION AT 10 PARK PLAZA, BOSTON, MA.
6. BORINGS MASSDOT BB−1 AND MASSDOT BB−2 WERE BEGUN IN JUNE 2012 AND FINISHED IN JUNE 2012 TO OBTAIN BEDROCK CORES.
7. BORINGS TRC BB−1 AND TRC BB−2 WERE MADE BY NEW HAMPSHIRE BORING, INC. P.O. BOX 165 DERRY, NH 03038.
8. THE NORTH AMERICAN VERTICAL DATUM (NAVD) OF 1988 IS USED THROUGHOUT.

10/28/2022	FIRST STRUCTURAL SUBMITTAL
DATE	DESCRIPTION

THIS SHEET IS APPROVED FOR CONSTRUCTION BY MASSDOT
AUTHORIZED SIGNATORY: _____ STATE BRIDGE ENGINEER
USE ONLY PRINTS OF LATEST DATE

608930_BR2-6 (L040227).DWG Plotted on 28-Oct-2022 1:06 PM
Proposal No. 608930-128034
FIRST STRUCTURAL SUBMITTAL (S1) 10/28/2022

608930_BR2-6 (L04027).DWG Plotted on 28-Oct-2022 1:06 PM

Proposal No. 608930-128034

A00860 - 106

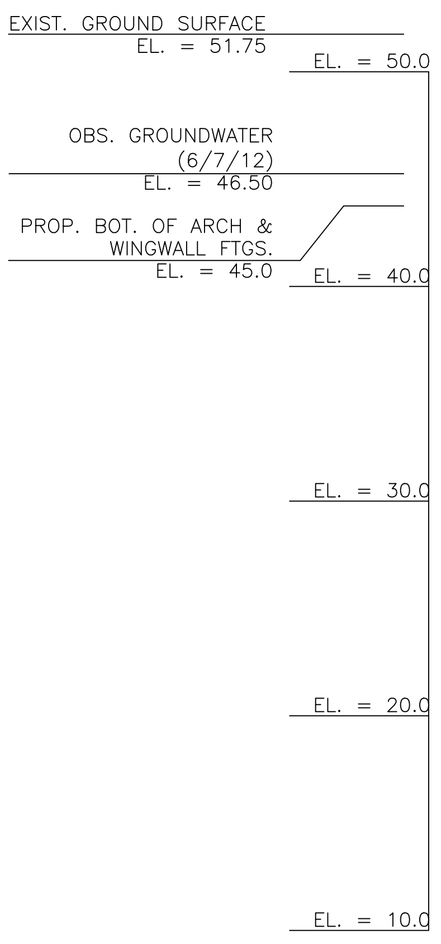

massDOT Highway

NEW HAMPSHIRE BORING, INC.
P.O. Box 165
Derry, NH 03038

Phone: (603)437-1610
Fax: (603) 437-0034
E Mail: nhb@nhboring.com

Boring No. BB-2
Scale 1" = 5'

City/Town: Lawrence | Bridge: L-04-027 | Project File No: 604839 | Contract No: 57734
Project: Lowell Street over the B&M Railroad | Date & Time Started: 5-30-12 9:00 am | Total Hours: 26.5
Groundwater Depth: 6'6" | Date & Time: 06-04-12 11:00 am | Date & Time Completed: 06-04-12 11:30 am
Coordinates: N 3082452.83 E 744596.52 | Driller's Name: Michael Misiaszek | Helper's Name: Thomas Garside Jr.
Ground Elevation: 51.75 | Inspector's Name: Cory St. Sauveur | Inspector's Company: Massachusetts Department of Transportation

Sample Number	Depth Range (Feet)	Blow Counts per 6 Inches Coring Times Minute Per Foot	Recovery Inches	Field Description	Strata Changes
S-1	0' - 2'	3 5 7 9	4"	Wet, medium dense, dark brown, ORGANIC SILT, trace fine to coarse sand.	
S-2	4' - 6'	15 23 32 41	15"	Wet, very dense, gray, FINE SAND AND INORGANIC SILT, trace coarse sand.	
S-3	9' - 9'11"	43 77/5"	9"	Wet, very dense, brown, FINE TO COARSE SAND AND INORGANIC SILT.	
S-4	14' - 14'9"	80 40/3"	6"	Wet, very dense, gray, FINE SAND AND INORGANIC SILT, trace gravel.	
S-5	19' - 20'11"	15 35 45 75/5"	15"	Wet, very dense, gray, FINE TO COARSE SAND, some inorganic silt, some fine gravel.	
S-6	24' - 24'6"	120/6"	3"	Wet, very dense, gray, FINE TO COARSE SAND, some inorganic silt, some fine gravel.	
S-7	29' - 29'11"	47 73/5"	3"	Wet, very dense, brown, FINE SAND, some inorganic silt, trace coarse sand.	
S-8	34' - 34'5"	120/5"	4"	Wet, very dense, brown, FINE TO COARSE SAND, some inorganic silt.	
S-9	39' - 39'4"	120/4"	4"	Wet, very dense, brown, FINE SAND, some inorganic silt, trace coarse sand.	
S-10	44' - 44'7"	82 38/1"	7"	Wet, very dense, brown, FINE SAND, some inorganic silt.	
S-11	49' - 49'11"	69 51/5"	9"	Wet, very dense, brown, FINE SAND, some inorganic silt.	
S-12	54' - 54'4"	120/4"	3"	Wet, very dense, gray, FINE SAND, some inorganic silt, trace coarse sand.	
S-13	59' - 59'10"	51 69/4"	9"	Wet, very dense, brown, FINE SAND, some inorganic silt.	
S-14	64' - 64'3"	60 60/3"	9"	Wet, very dense, gray, FINE SAND, some inorganic silt.	68'
S-15	69' - 69'9"	56 64/3"	5"	Wet, very dense, gray, FINE TO COARSE SAND, some inorganic silt. Top of BEDROCK at 70'	70'
C-1	70'6" - 75'6"	12 11 11 14 10	42"	Advanced to 70'6" and began coring. Hard, gray, fractured, APHANITIC SCHIST. Percent Recovery = 70%	
C-2	75'6" - 78'6"	9 14 13	36"	Hard, gray, fractured, APHANITIC SCHIST. Percent Recovery = 100%	78'6"
				Bottom of Exploration = 78'6"	

Remarks:
Boring moved prior to drilling from N3082452.30, E744598.84 to N3082452.83, E744596.52 for access constraints (slopes, adjacent structure, etc.) Borings on railroad property and will be grouted upon completion. Retrieved only 8' of rock due to hitting sand seams and jamming barrell, hole called at 78'6" per on site inspector.

Protective Device - Stand: Box:
Well Depth: Solid Pipe:
Stick Up Pipe: Screen Pipe:

Type of Drill Rig: CME-750
Arrow-Board: Signs: Cones: 1
Casing HW Size: 4" Depth: 70'
Hammer Weight: 300 lbs. Fall: 30"
Sampler Type: S/S Size: 1 3/8"
Automatic Hammer Weight:
Safety Hammer Weight: 140 lbs.
Donut Hammer Weight:
Fall: 30"
Core Barrel Type NX: Size: 2.15"

Penetration Resistance (N) Guide:

Cohesionless Soils (Sands, Gravels)		Cohesive Soils (Silts, Clays)	
Relative Density	Penetration Resistance	Consistency	Penetration Resistance
Very Loose	0 - 4	Very Soft	0 - 2
Loose	4 - 10	Soft	2 - 4
Medium Dense	10 - 30	Medium Stiff	4 - 8
Dense	30 - 50	Stiff	8 - 15
Very Dense	Over 50	Very Stiff	15 - 30
N=Sum of Second and Third 6" Blow Counts		Hard	Over 30

Terms Used for Second Entry of Descriptions: and = 40-50%, some = 10-40%, trace = 10% or less

BORING NOTES:

1. SEE BORING NOTES ON SHEET 5.

10/28/2022	FIRST STRUCTURAL SUBMITTAL
DATE	DESCRIPTION

THIS SHEET IS APPROVED FOR CONSTRUCTION BY MASSDOT
AUTHORIZED SIGNATORY: STATE BRIDGE ENGINEER
USE ONLY PRINTS OF LATEST DATE

FIRST STRUCTURAL SUBMITTAL (S1) 10/28/2022

LAWRENCE
LOWELL ST OVER LMRC RAIL TRAIL

STATE	FED. AID PROJ. NO.	SHEET NO.	TOTAL SHEETS
MA	-	18	26
PROJECT FILE NO.	608930		

PLAN AND ELEVATION

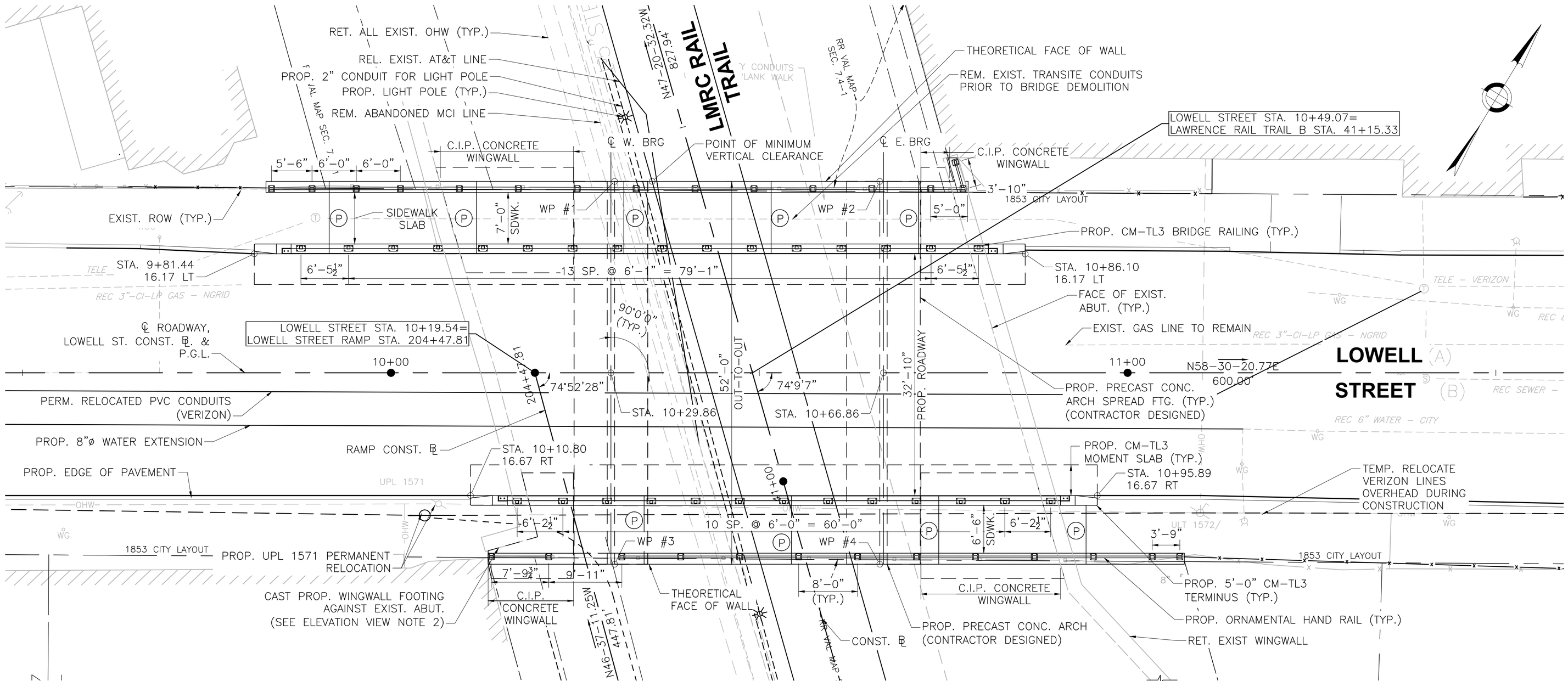

PLAN
SCALE: ⅛"=1'-0"

PRECAST CONCRETE ARCH WORKING POINTS		
WORKING POINT	STATION	OFFSET (FT)
WP #1	10+30.36	26.00 LT
WP #2	10+66.36	26.00 LT
WP #3	10+30.36	26.00 RT
WP #4	10+66.36	26.00 RT
POINT OF MINIMUM VERTICAL CLEARANCE	10+35.45	26.00 LT

NOTE:

WORKING POINTS ARE PROVIDED AT THE INSIDE CULVERT FACE ALONG THE THEORETICAL FACE OF WALL. POINT OF MINIMUM VERTICAL CLEARANCE IS ALSO PROVIDED AT THE THEORETICAL FACE OF WALL.

LEGEND:

(P) PROPOSED PARAFFIN JOINT

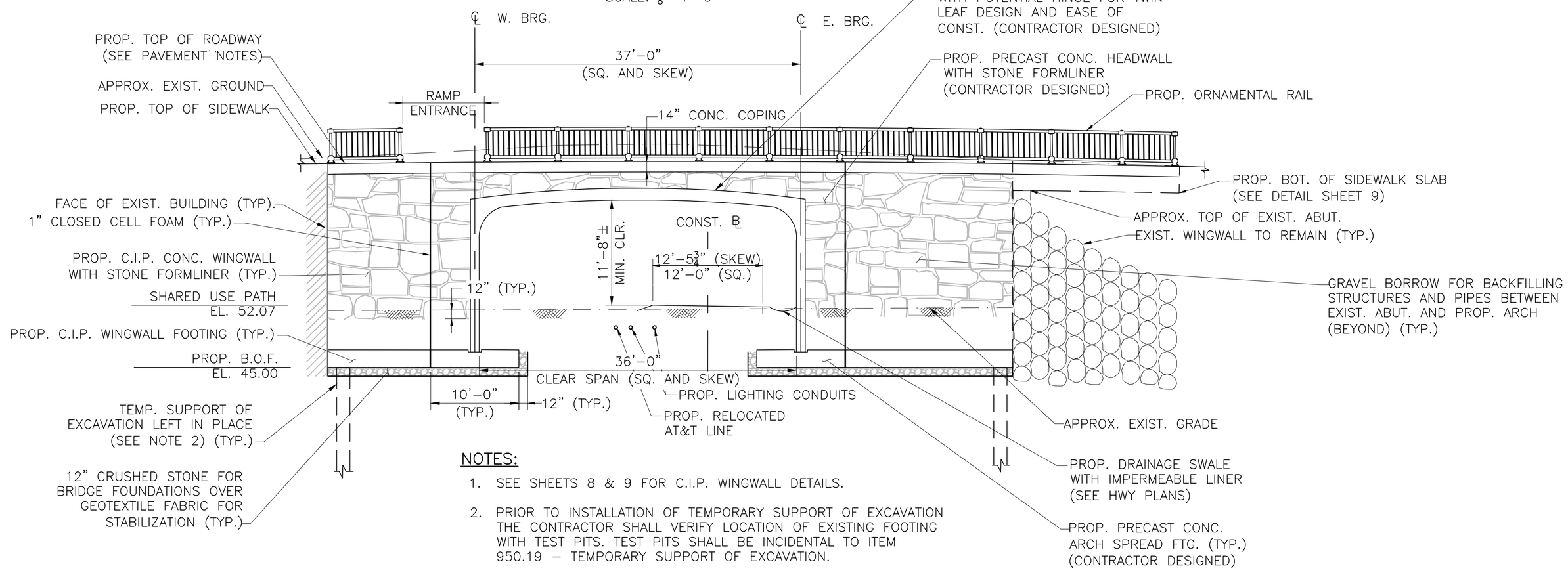

NOTES:

1. SEE SHEETS 8 & 9 FOR C.I.P. WINGWALL DETAILS.
2. PRIOR TO INSTALLATION OF TEMPORARY SUPPORT OF EXCAVATION THE CONTRACTOR SHALL VERIFY LOCATION OF EXISTING FOOTING WITH TEST PITS. TEST PITS SHALL BE INCIDENTAL TO ITEM 950.19 – TEMPORARY SUPPORT OF EXCAVATION.

ELEVATION (LOOKING NORTH)
SCALE: ⅛" = 1'-0"

10/28/2022	FIRST STRUCTURAL SUBMITTAL
DATE	DESCRIPTION

THIS SHEET IS APPROVED FOR CONSTRUCTION BY MASSDOT
AUTHORIZED SIGNATORY: _____ STATE BRIDGE ENGINEER
USE ONLY PRINTS OF LATEST DATE

608930_BR7 (L040227).DWG Plotted on 28-Oct-2022 1:06 PM
Proposal No. 608930-128034
A00860 - 107
FIRST STRUCTURAL SUBMITTAL (S1) 10/28/2022

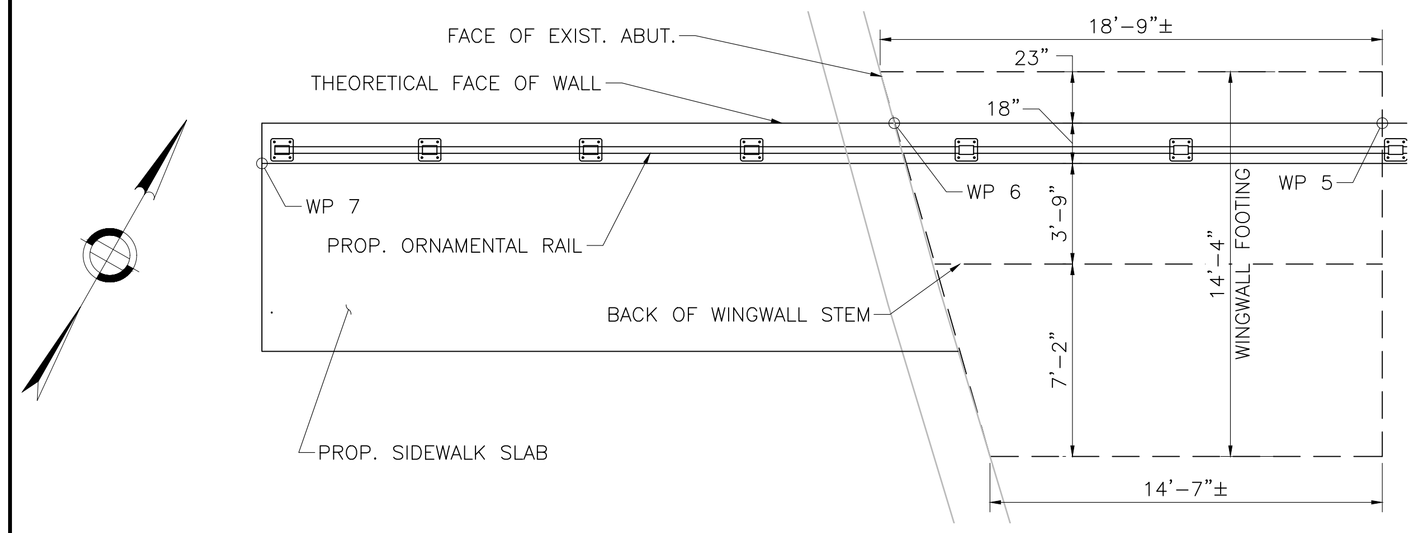

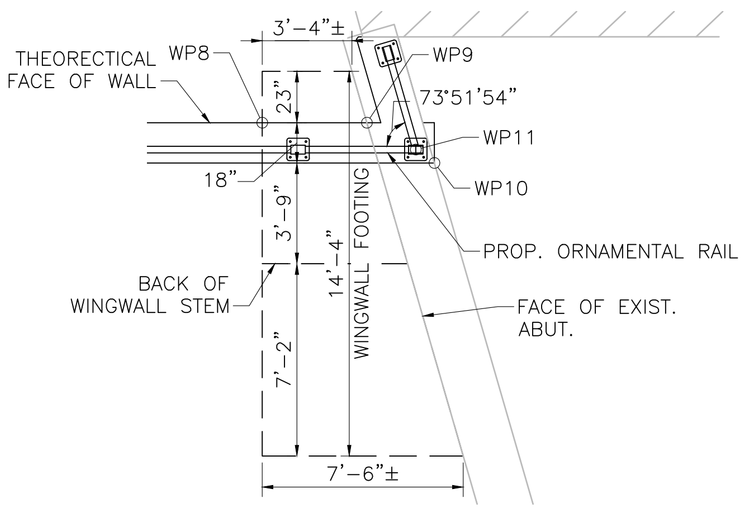

WINGWALL WORKING POINTS		
WORKING POINT	STATION	OFFSET (FT)
WP #5	10+24.78	26.00 LT
WP #6	10+06.66±	26.00 LT
WP #7	9+83.03	24.50 LT
WP #8	10+70.93	26.00 LT
WP #9	10+75.84±	26.00 LT
WP #10	10+78.36	24.50 LT
WP #11	10+77.67±	25.00 LT

NOTE:

ALL PROPSOED WINGWALLS ARE PARALLEL TO THE LOWEST STREET BASELINE, UNLESS OTHERWISE NOTED.

LAWRENCE
LOWELL ST OVER LMRC RAIL TRAIL

STATE	FED. AID PROJ. NO.	SHEET NO.	TOTAL SHEETS
MA	-	19	26
PROJECT FILE NO.		608930	

WINGWALL DETAILS (1 OF 2)

NORTHWEST WINGWALL PLAN

SCALE: $\frac{1}{4}$" = 1'-0"

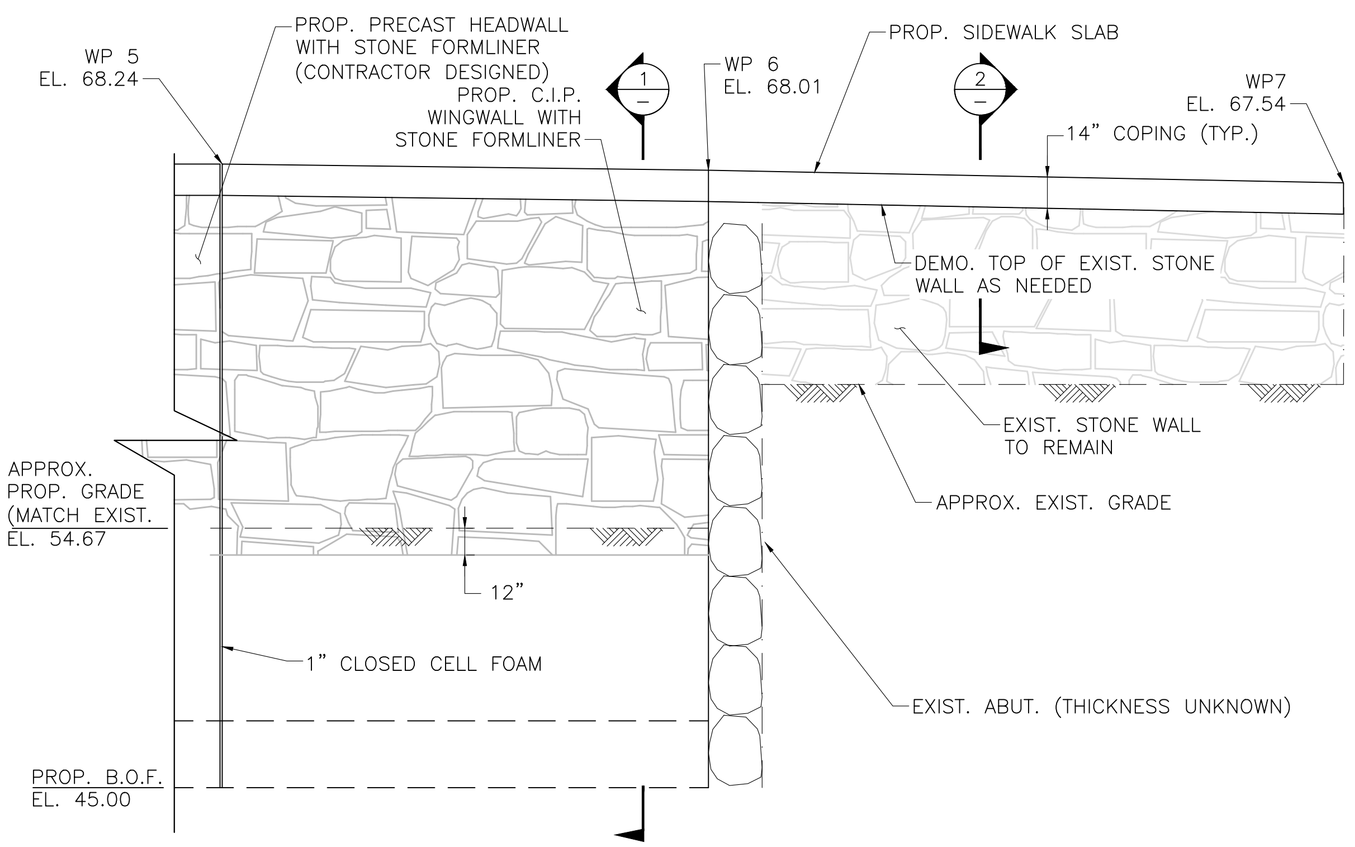

NORTHWEST WINGWALL ELEVATION

SCALE: $\frac{1}{4}$" = 1'-0"

NORTHEAST WINGWALL PLAN

SCALE: $\frac{1}{4}$" = 1'-0"

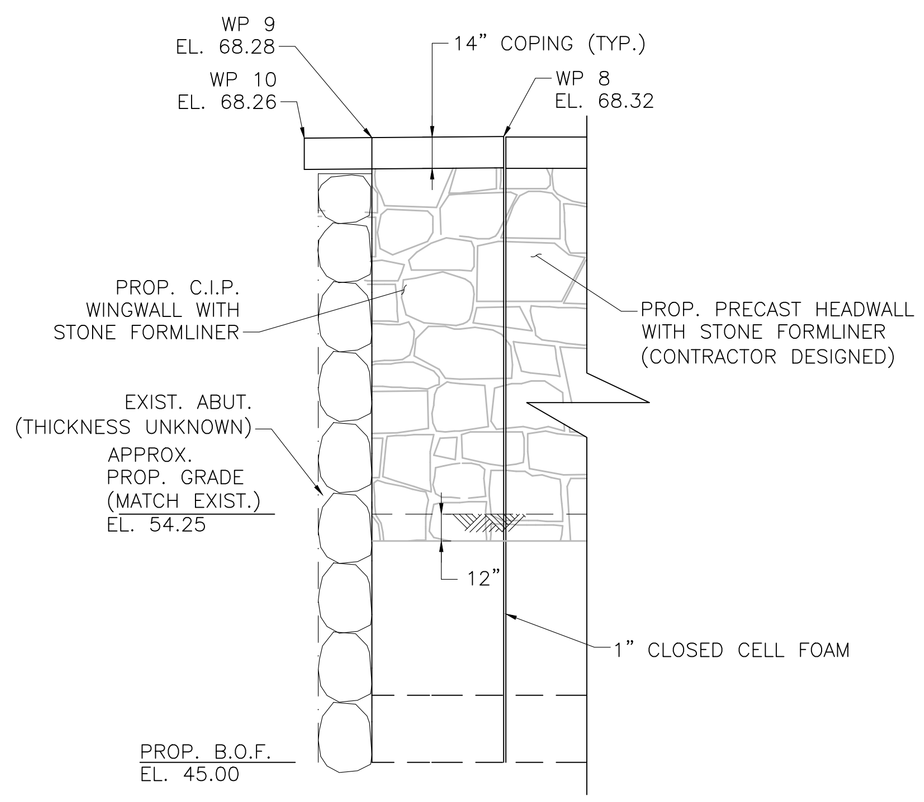

NORTHEAST WINGWALL ELEVATION

SCALE: $\frac{1}{4}$" = 1'-0"

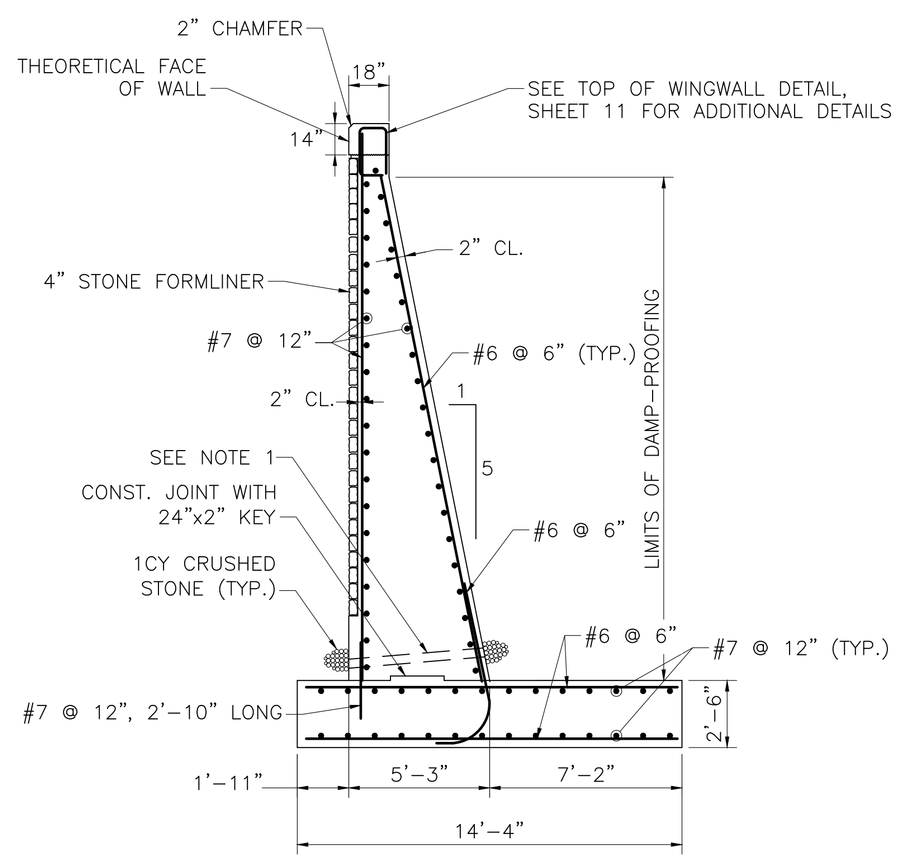

SECTION 1 – TYPICAL WINGWALL SECTION

SCALE: $\frac{1}{4}$" = 1'-0"

NOTE:

ORNAMENTAL HAND RAIL NOT SHOWN IN ELEVATIONS FOR CLARITY.

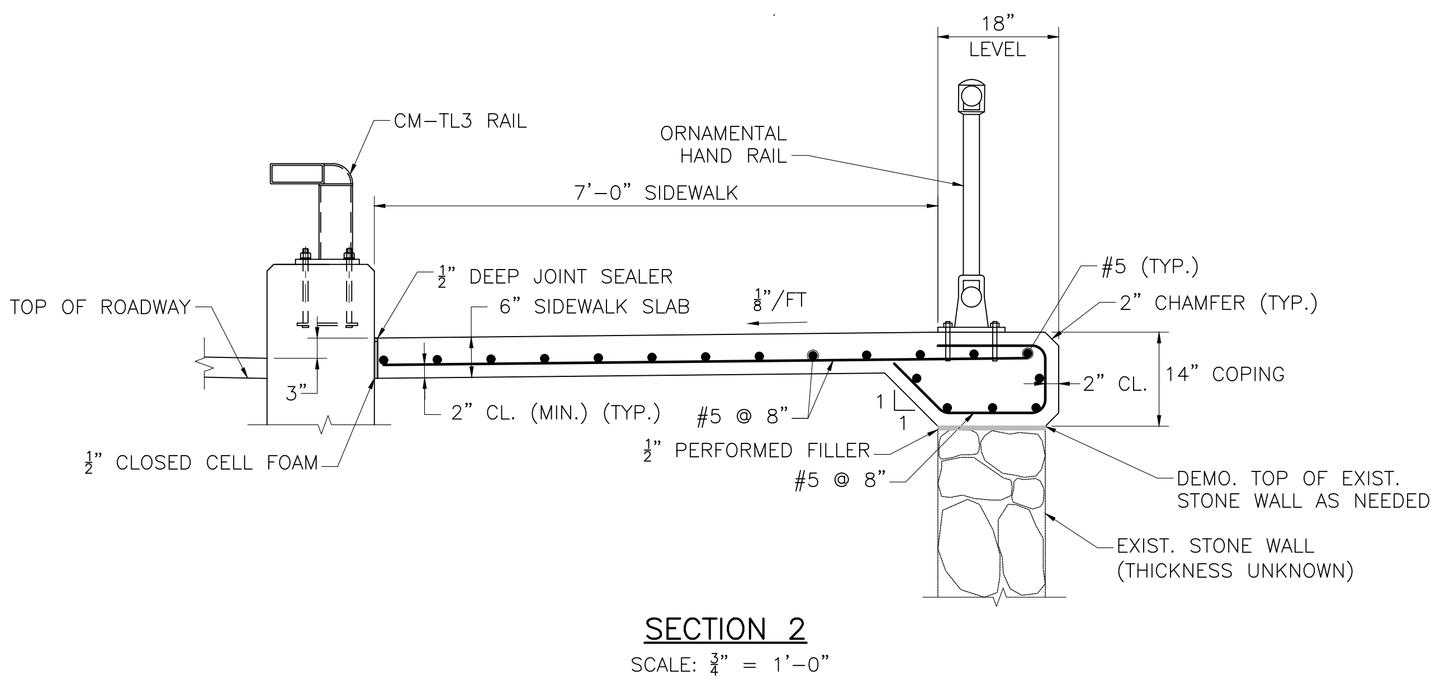

SECTION 2

SCALE: $\frac{3}{4}$" = 1'-0"

NOTES:

1. 4" ø WEEP HOLES 10'-0" O.C. LOCATED 12" ABOVE THE HEEL OF THE FOOTING SLOPING 1" PER FOOT TOWARDS THE FRONT FACE. PROVIDE 1 CUBIC YARD OF CRUSHED STONE AT EACH END OF WEEP HOLE.
2. ALL CONCRETE SHALL BE 4000 PSI, 1½ IN, 565 CEMENT CONCRETE.
3. FACTORED BEARING PRESSURE = 8.08 KSF AS PER AASHTO LRFD BRIDGE DESIGN SPECIFICATIONS STRENGTH I LOAD COMBINATION.

   FACTORED BEARING RESISTANCE = 8.8 KSF. FACTORED BEARING RESISTANCE IS THE PRODUCT OF THE NOMINAL BEARING RESISTANCE AND A RESISTANCE FACTOR OF 0.45.

10/28/2022	FIRST STRUCTURAL SUBMITTAL
DATE	DESCRIPTION
THIS SHEET IS APPROVED FOR CONSTRUCTION BY MASSDOT AUTHORIZED SIGNATORY:	STATE BRIDGE ENGINEER
USE ONLY PRINTS OF LATEST DATE	

608930_BR8-10 (L04027).DWG Plotted on 28-Oct-2022 1:06 PM
FIRST STRUCTURAL SUBMITTAL (S1) 10/28/2022
Proposal No. 608930-128034
A00860 - 108

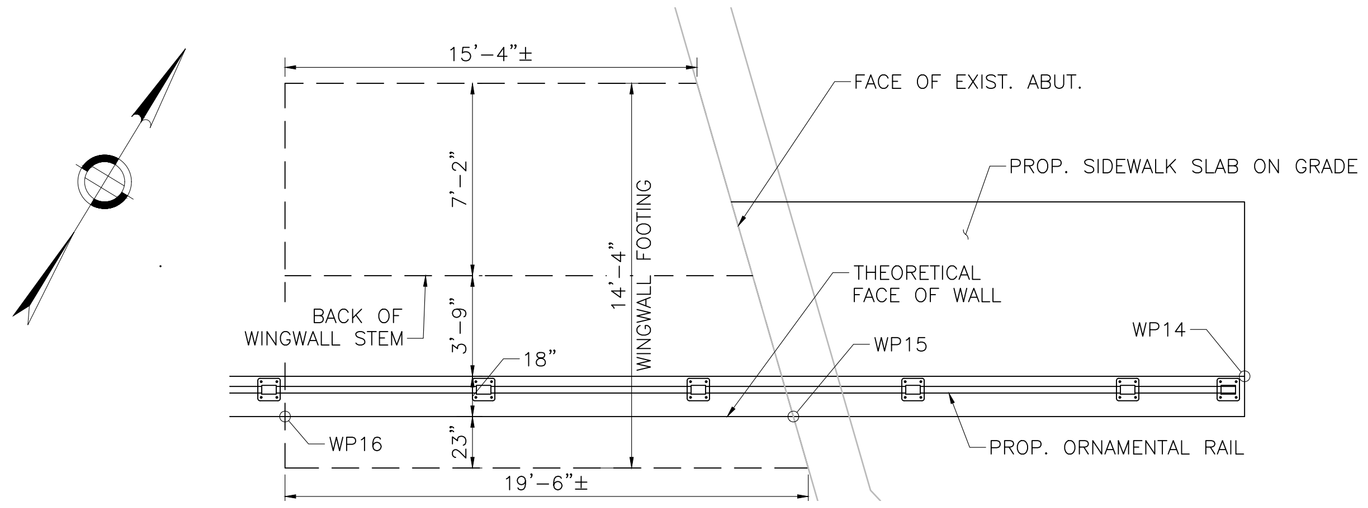

SOUTHEAST WINGWALL PLAN

SCALE: $\frac{1}{4}$" = 1'-0"

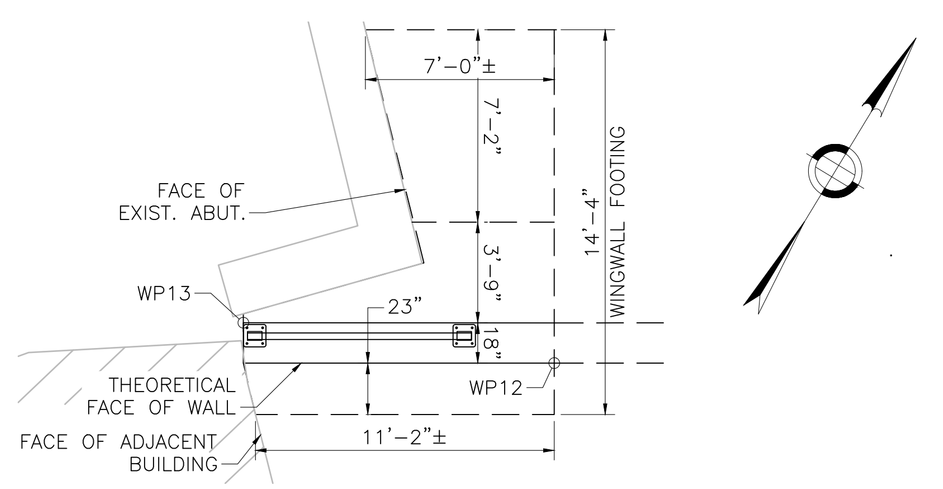

SOUTHWEST WINGWALL PLAN

SCALE: $\frac{1}{4}$" = 1'-0"

LAWRENCE
LOWELL ST OVER LMRC RAIL TRAIL

STATE	FED. AID PROJ. NO.	SHEET NO.	TOTAL SHEETS
MA	-	20	26
PROJECT FILE NO.	608930		

WINGWALL DETAILS (2 OF 2)

WINGWALL WORKING POINTS		
WORKING POINT	STATION	OFFSET (FT)
WP #12	10+24.78	26.00 RT
WP #13	10+13.19	24.50 RT
WP #14	11+07.70	24.50 RT
WP #15	10+90.89±	26.00 RT
WP #16	10+71.94	26.00 RT

NOTE:
ALL PROPSOED WINGWALLS ARE PARALLEL TO THE LOWEST STREET BASELINE, UNLESS OTHERWISE NOTED.

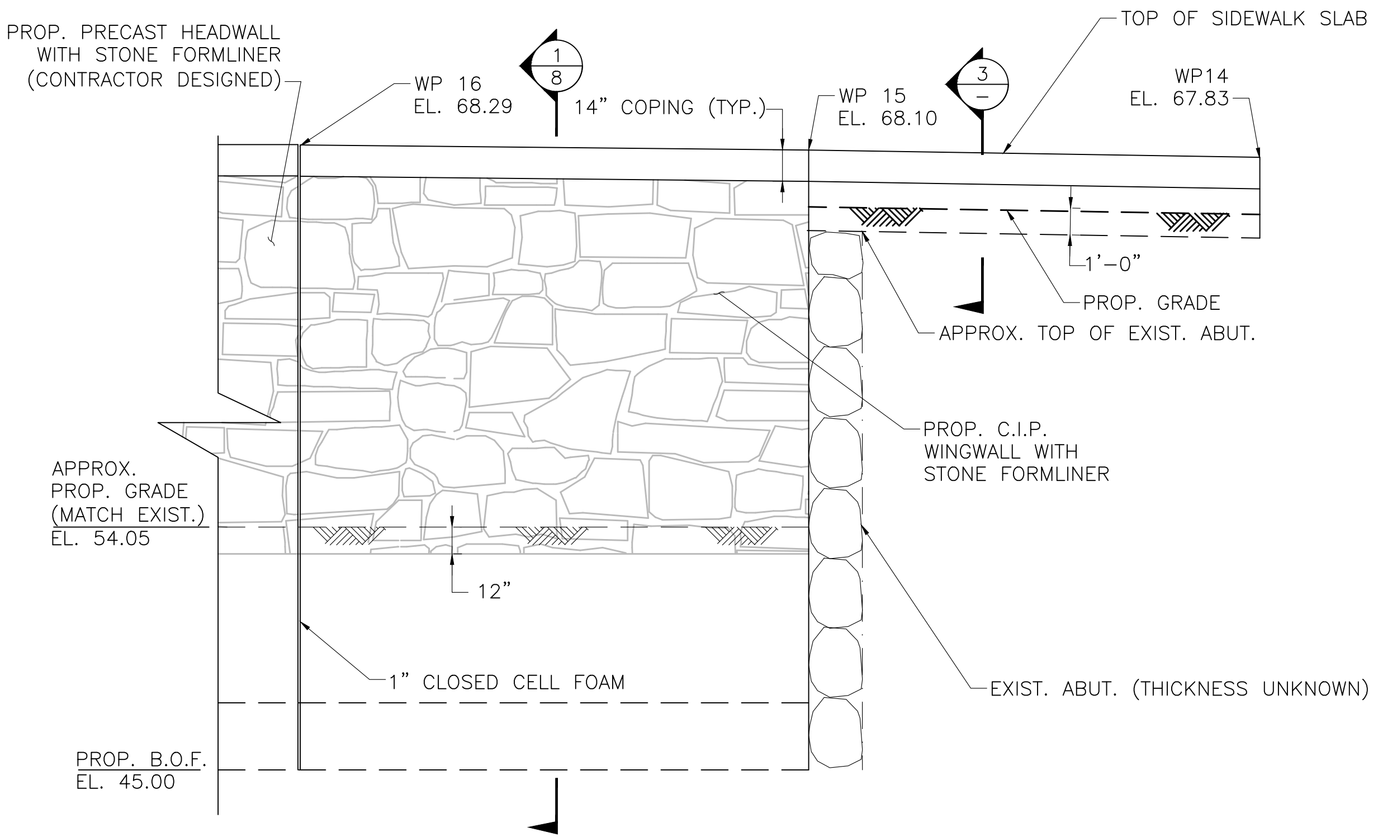

SOUTHEAST WINGWALL ELEVATION

SCALE: $\frac{1}{4}$" = 1'-0"

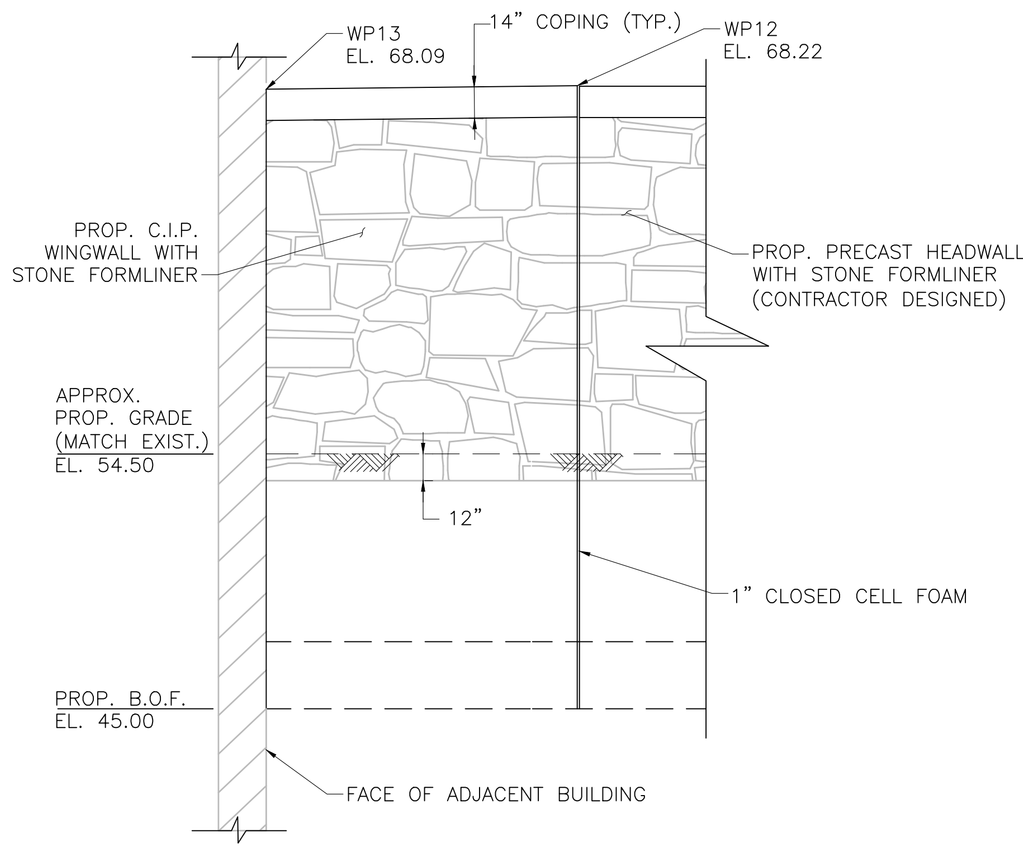

SOUTHWEST WINGWALL ELEVATION

SCALE: $\frac{1}{4}$" = 1'-0"

NOTE:
ORNAMENTAL HAND RAIL NOT SHOWN IN ELEVATIONS FOR CLARITY.

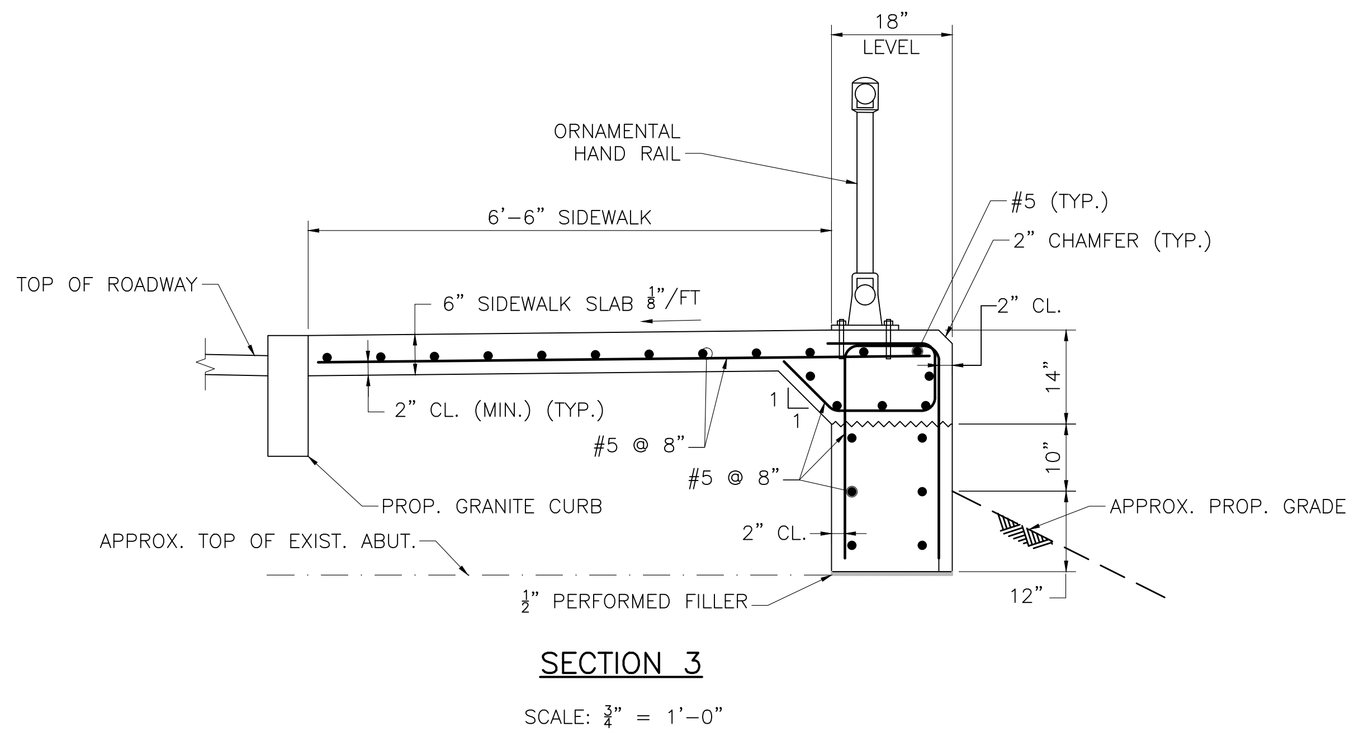

SECTION 3

SCALE: $\frac{3}{4}$" = 1'-0"

10/28/2022	FIRST STRUCTURAL SUBMITTAL
DATE	DESCRIPTION

THIS SHEET IS APPROVED FOR CONSTRUCTION BY MASSDOT
AUTHORIZED SIGNATORY: _____ STATE BRIDGE ENGINEER
USE ONLY PRINTS OF LATEST DATE

608930_BR8-10 (L04027).DWG Plotted on 28-Oct-2022 1:06 PM
FIRST STRUCTURAL SUBMITTAL (S1) 10/28/2022
Proposal No. 608930-128034
A00860 - 109

LAWRENCE
LOWELL ST OVER LMRC RAIL TRAIL

STATE	FED. AID PROJ. NO.	SHEET NO.	TOTAL SHEETS
MA	-	21	26
PROJECT FILE NO.	608930		

SUPERSTRUCTURE DETAILS

TRANSVERSE SECTION NOTES:

1. CONTRACTOR IS RESPONSIBLE FOR DEMOLITION OF ALL EXISTING BRIDGE INFRASTRUCTURE.
2. CONTRACTOR SHALL SMOOTHLY TRANSITION ALL PROPOSED ELEMENTS INTO THE EXISTING APPROACHES AND EMBANKMENT SLOPES.

PRECAST CONCRETE ARCH NOTES:

1. CONTRACTOR SHALL SUBMIT PRECAST CONCRETE ARCH, HEADWALL, AND FOOTING DESIGN CALCULATIONS PREPARED IN ACCORDANCE WITH THE LATEST AASHTO LRFD BRIDGE DESIGN SPECIFICATIONS AND THE MASSDOT BRIDGE MANUAL USING ENGLISH UNITS FOR HL–93 LOADING FOR APPROVAL BY THE ENGINEER. THE DESIGN COMPUTATIONS SHALL CONSIDER ALL LOADINGS AS APPROPRIATE DURING FABRICATION, SHIPMENT, ERECTION, CONSTRUCTION AND AFTER COMPLETION OF CONSTRUCTION BASED UPON THESE CONSTRUCTION DRAWINGS. CALCULATIONS SHALL BE PREPARED AND DRAWINGS SHALL BE STAMPED BY A PROFESSIONAL ENGINEER REGISTERED IN THE COMMONWEALTH OF MASSACHUSETTS.
2. ALL CONCRETE ARCH ELEMENTS SHALL BE 5000 PSI, ¾", 685 HP CEMENT CONCRETE.
3. THE ARCH DIMENSIONS PROVIDED ARE SHOWN TO ESTABLISH THE SIZE OF THE PROPOSED OPENING. THE WIDTHS AND THICKNESSES OF THE ARCH COMPONENTS MAY VARY DEPENDING ON THE MANUFACTURERS SPECIFICATIONS, PROVIDED THAT THE OPENING SIZE IS MAINTAINED AND ALL LONGITUDINAL JOINTS ARE PARALLEL TO THE CENTERLINE OF CONSTRUCTION.
4. THE DESIGN OF THE FOOTING DETAILED HEREIN IS BASED ON ASSUMED GEOMETRY OF THE ARCH COMPONENTS AND THE DESIGN LOADS SPECIFIED IN THE SPECIAL PROVISIONS. THE CONTRACTOR SHALL PREPARE AND SUBMIT A COMPLETE REDESIGN OF THE FOOTING SHOULD THE GEOMETRY OF THE FRAME VARY FROM THAT SPECIFIED ON THE PLANS.
5. THE CONTRACTOR SHALL APPROVE ALL ELEVATIONS AND DIMENSIONS OF THE SHOP DRAWINGS PRIOR TO FABRICATION. SHOP DRAWINGS AND CALCULATIONS SHALL BE SUBMITTED TO THE ENGINEER FOR REVIEW AND APPROVAL PRIOR TO FABRICATION.
6. REINFORCEMENT SHALL BE PLACED WITH A MINIMUM OF 1½" COVER.
7. ALL CONCRETE ARCH REINFORCEMENT SHOWN IS CONCEPTUAL FOR BIDDING PURPOSES. THE CONTRACTOR SHALL DESIGN HEADWALL CONNECTION TO ARCH AND SHALL SUBMIT DESIGN CALCULATIONS AS PART OF THE SHOP DRAWINGS.
8. FACTORED BEARING PRESSURE = 4.98 KSF AS PER AASHTO LRFD BRIDGE DESIGN SPECIFICATIONS STRENGTH I LOAD COMBINATION.

   FACTORED BEARING RESISTANCE = 8.8 KSF. FACTORED BEARING RESISTANCE IS THE PRODUCT OF THE NOMINAL BEARING RESISTANCE AND A RESISTANCE FACTOR OF 0.45. THE FACTORED BEARING RESISTANCE SHALL BE USED IN THE DESIGN OF THE ARCH FOOTINGS (FOR FOOTINGS THAT ARE OVER–EXCAVATED AND PLACED ON CRUSHED STONE, AS SPECIFIED IN THE GEOTECHNICAL REPORT).
9. SIDEWALK AND TRAVEL LANE WIDTHS SHOWN ARE APPROXIMATE AND SHALL GRADUALLY TAPER TO MEET THE EXISTING FEATURES AT THE BRIDGE APPROACHES.

PAVEMENT NOTES:

PROPOSED FULL DEPTH PAVEMENT:
SURFACE: 1½" SUPERPAVE SURFACE COURSE – 9.5 (SSC–9.5) OVER
2" SUPERPAVE INTERMEDIATE COURSE – 12.5 (SIC–12.5)
BASE: 4½" SUPERPAVE BASE COURSE 37.5 (SBC–37.5)
SUBBASE: 4" DENSE GRADED CRUSHED STONE OVER
8" GRAVEL BORROW, TYPE B

PROPOSED HMA SIDEWALK:
SURFACE: 3½" SUPERPAVE SURFACE COURSE 9.5 (SSC – 9.5) OVER
8" GRAVEL BORROW, TYPE B

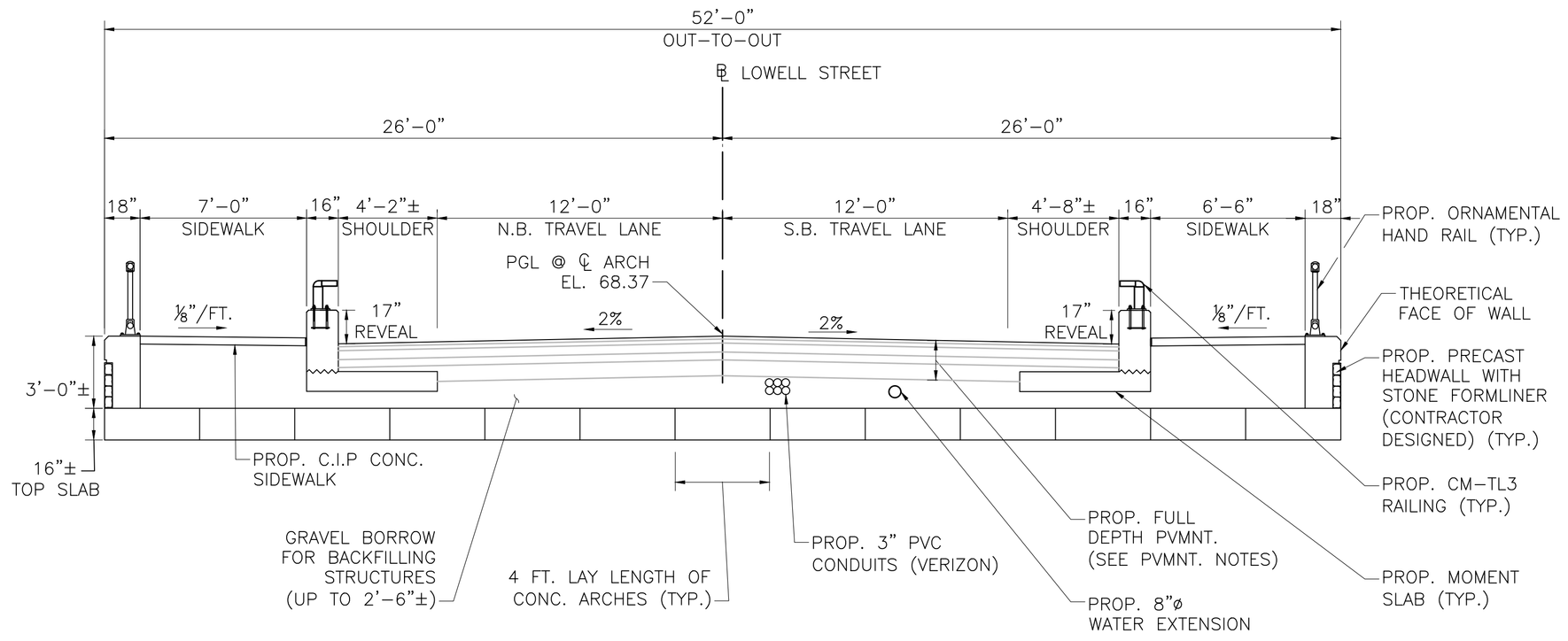

NOTE:
1. THE LOCATION AND TEMPORARY RELOCATION OR REPLACEMENT OF THE PROPOSED WATER LINE EXTENSION WILL BE A CONTINUED EFFORT AS DESIGN PROGRESSES AND WILL BE COORDINATED WITH THE CITY OF LAWRENCE AS NEEDED.
2. VERIZON CABLES TO BE TEMPORARILY RELOCATED OVERHEAD DURING BRIDGE CONSTRUCTION.

TRANSVERSE SECTION (LOOKING UPSTATION)

SCALE: ¼" = 1'–0"

10/28/2022	FIRST STRUCTURAL SUBMITTAL
DATE	DESCRIPTION

THIS SHEET IS APPROVED FOR CONSTRUCTION BY MASSDOT
AUTHORIZED SIGNATORY: _____ STATE BRIDGE ENGINEER
USE ONLY PRINTS OF LATEST DATE

FIRST STRUCTURAL SUBMITTAL (S1) 10/28/2022

608930_BR8-10 (L04027).DWG Plotted on 28-Oct-2022 1:06 PM
Proposal No. 608930-128034
A00860 - 110

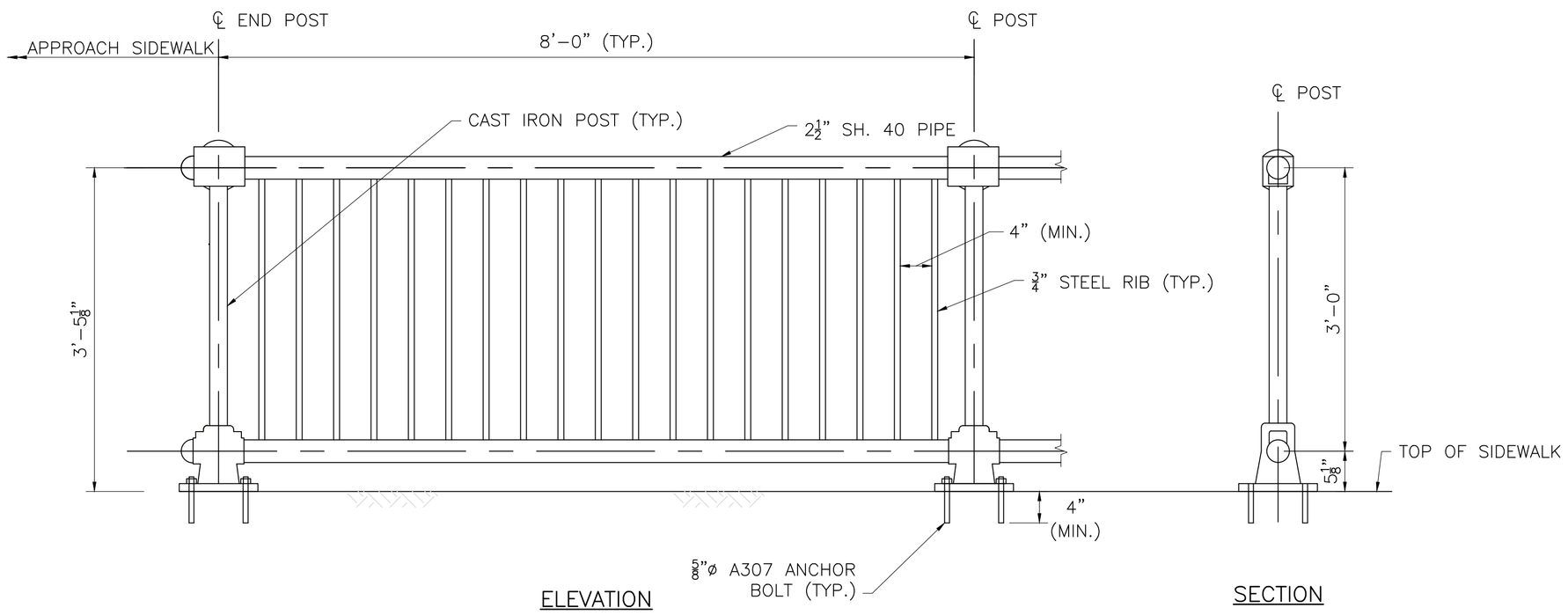

ORNAMENTAL HAND RAIL DETAIL

SCALE: 1" = 1'–0"

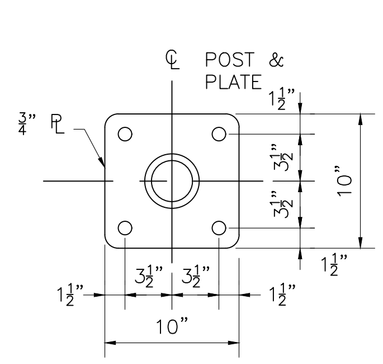

BASE PLATE DETAILS

SCALE: 1½" = 1'–0"

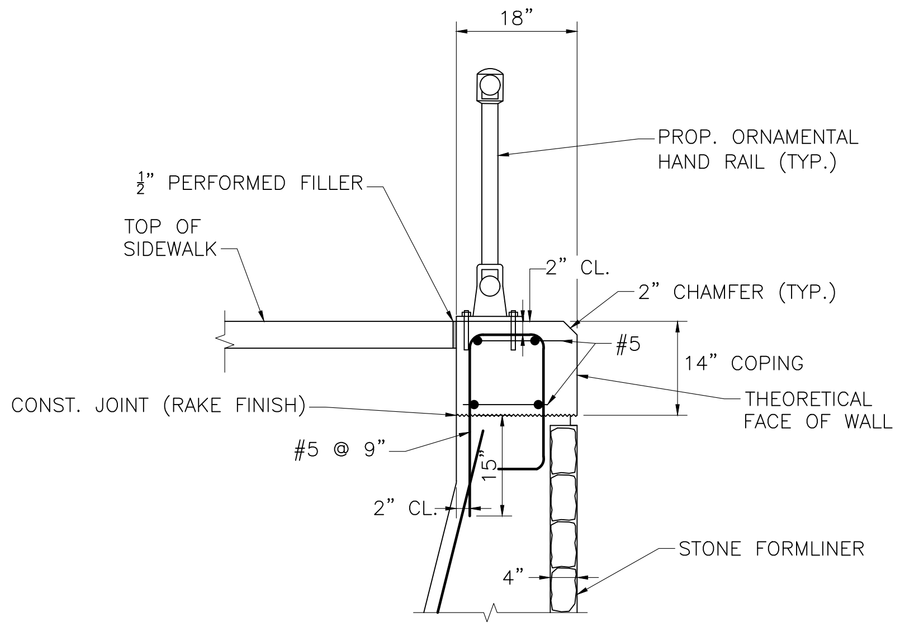

TOP OF WINGWALL DETAIL

SCALE: ¾" = 1'–0"

ORNAMENTAL HAND RAIL NOTES:

1. ANCHOR BOLTS SHALL BE SET WITH TEMPLATES.
2. THE NUT SECURING THE POST BASE PLATE TO THE CONCRETE SHALL BE TIGHTENED A SNUG FIT, AND THEN GIVEN AN ADDITIONAL ⅛ TURN AFTER THE STEEL IS IN PLACE.
3. BOTTOM OF POST BASE PLATE TO BE SET ON A ⅛" MOLDED FABRIC BEARING PAD (M9.16.2). THE THICKNESS OF THE PAD SHALL BE IGNORED BY THE DETAILER.
4. POSTS SHALL BE SET PLUMB. RAILS SHALL BE PARALLEL TO THE PROFILE GRADE LINE.
5. HORIZONTAL RAILING COMPONENTS ARE TO HAVE FIXED CONNECTIONS AT ONE POST AND SLIDING CONNECTIONS AT THE OTHER. EACH POST IS TO HAVE ALL SLIDING CONNECTIONS ON ONE SIDE AND HAVE ALL FIXED CONNECTIONS ON THE OTHER.
6. ENDS OF TUBE SECTIONS SHALL BE SAWED. GRIND SMOOTH EXPOSED EDGES. ALL CUT ENDS SHALL BE TRUE AND SMOOTH.
7. PROVIDE ¼"ø DRAIN HOLE IN RAILS AT LOW POINTS.
8. ALL STEEL SHAPES AND PLATES SHALL BE GALVANIZED AND PAINTED.
9. ALL STEEL, INCLUDING HEADS OF EXPOSED BOLTS, SHALL HAVE A FINISH COAT COLOR BLACK, FEDERAL COLOR ID #17038.

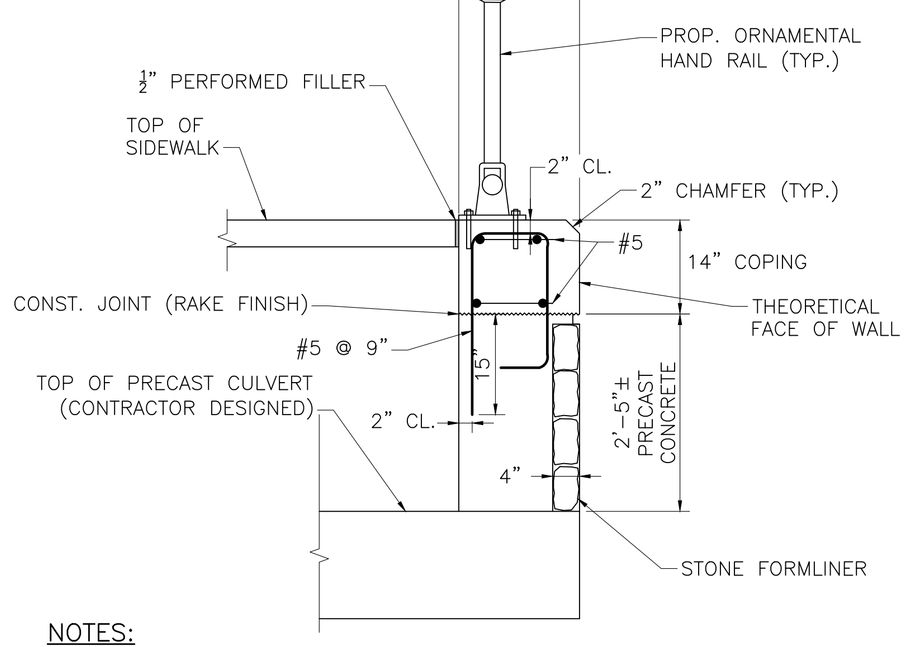

NOTES:

1. PRECAST HEADWALL SHALL BE CONTRACTOR DESIGNED ASIDE FROM THE DIMENSIONS AND REBAR SHOWN IN THIS DETAIL. THE CONTRACTORS DESIGN SHALL ENSURE THAT THE HEADWALL COPING AND FORMLINER ALIGNS WITH THE ADJACENT RETAINING WALLS.
2. PRECAST HEADWALL AND CULVERT REINFORCING NOT SHOWN FOR CLARITY. THE DESIGN OF THE HEADWALL REINFORCING SHALL BE THE RESPONSIBILITY OF THE CONTRACTOR.

HEADWALL SECTION

SCALE: ¾" = 1'–0"

10/28/2022	FIRST STRUCTURAL SUBMITTAL
DATE	DESCRIPTION

THIS SHEET IS APPROVED FOR CONSTRUCTION BY MASSDOT
AUTHORIZED SIGNATORY: _____ STATE BRIDGE ENGINEER
USE ONLY PRINTS OF LATEST DATE

608930_BR11 (L04027).DWG Plotted on 28-Oct-2022 1:07 PM
Proposal No. 608930-128034
FIRST STRUCTURAL SUBMITTAL (S1) 10/28/2022
A00860 - 111

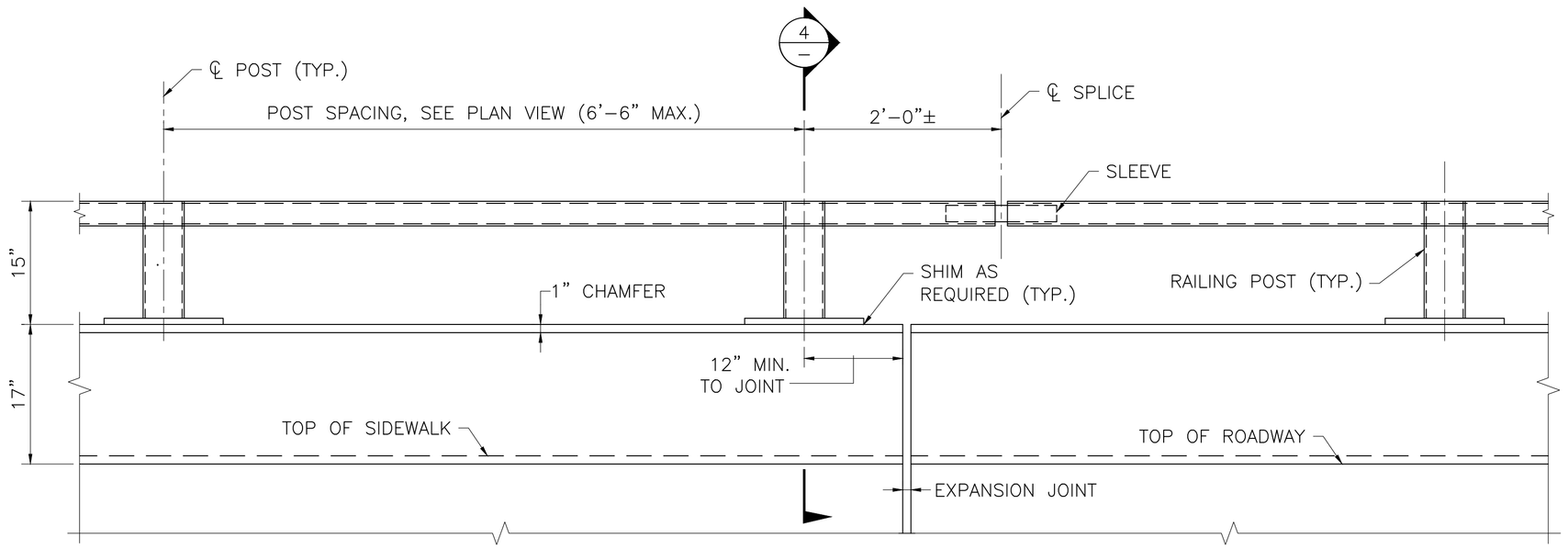

ELEVATION

SCALE: 1" – 1'-0"

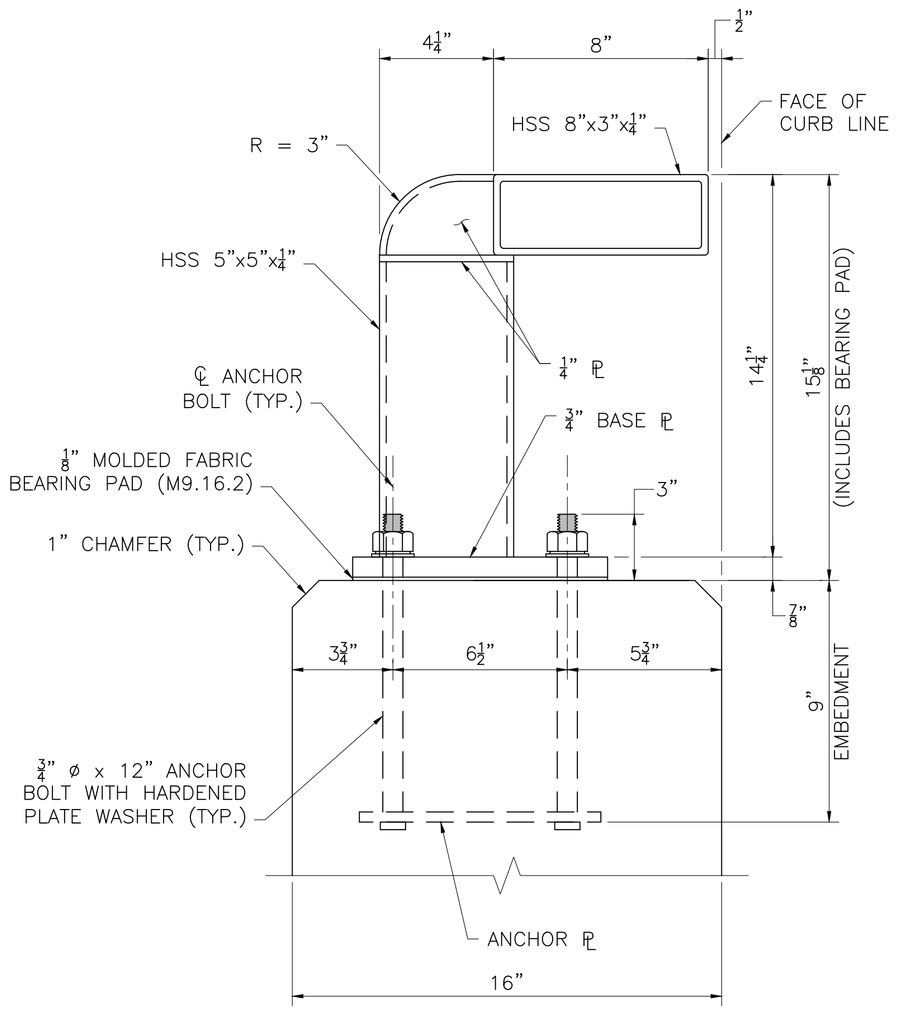

SECTION 4

SCALE: 3" = 1'-0"

LAWRENCE
LOWELL ST OVER LMRC RAIL TRAIL

STATE	FED. AID PROJ. NO.	SHEET NO.	TOTAL SHEETS
MA	-	23	26
PROJECT FILE NO.	608930		

CM-TL3 RAILING DETAILS

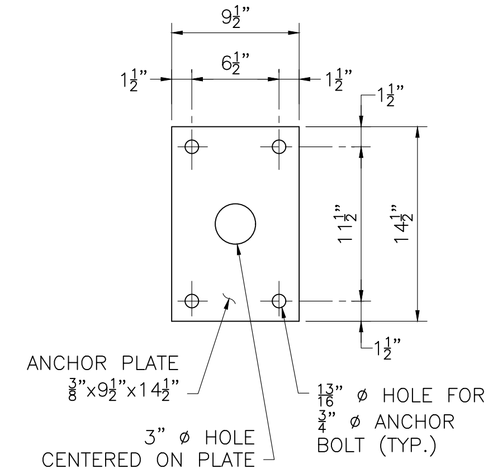

ANCHOR PLATE

SCALE 1½" = 1'-0"

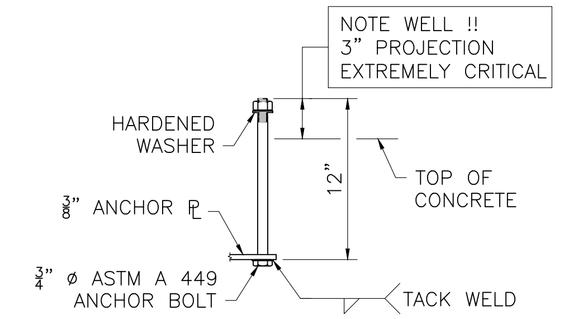

ANCHOR BOLT

SCALE 1½" = 1'-0"

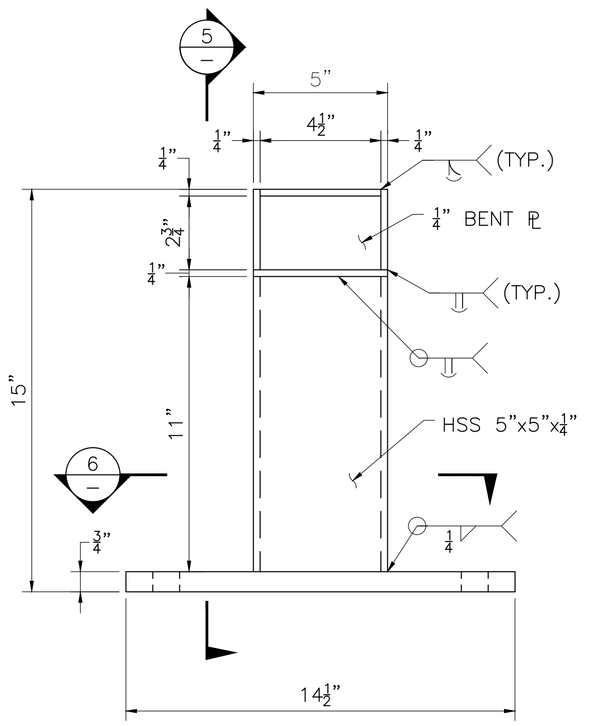

ELEVATION

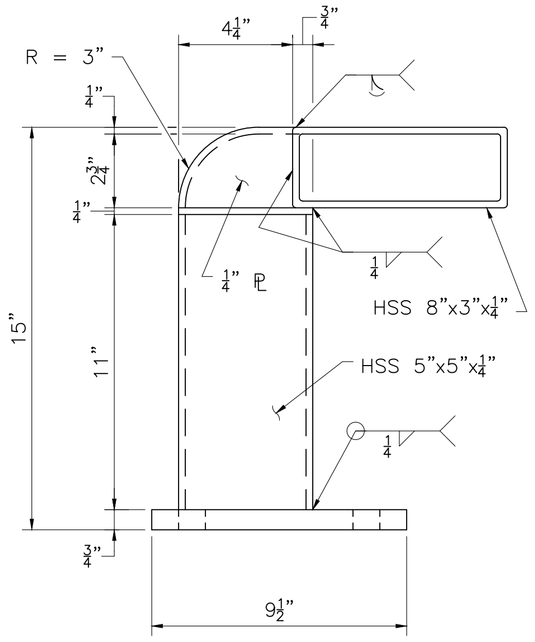

SECTION 5

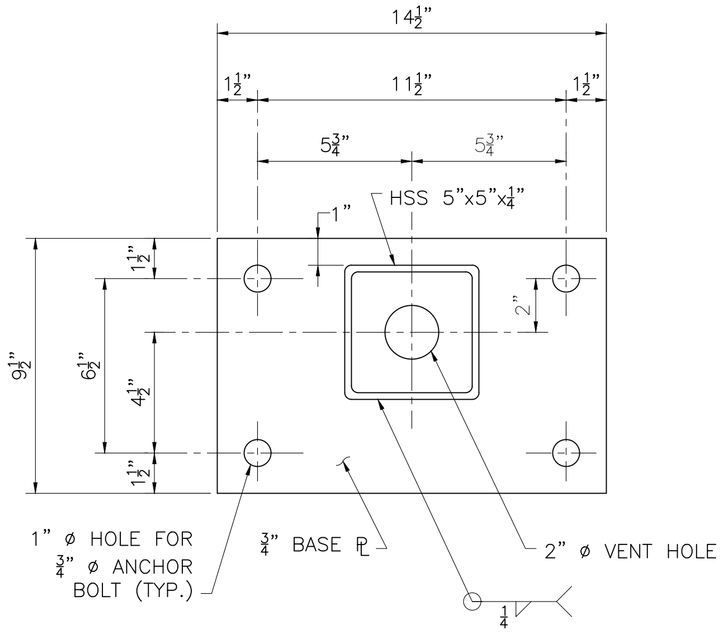

SECTION 6

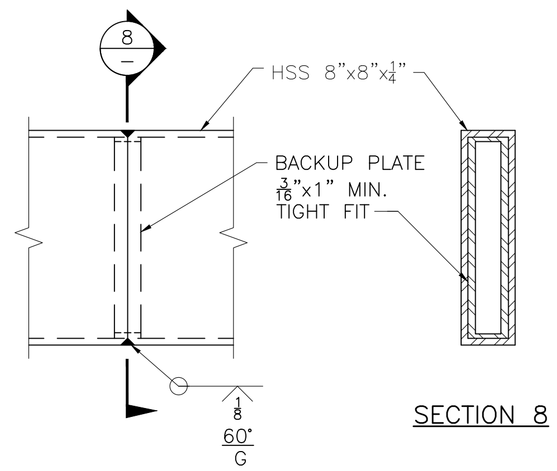

SECTION 8

FINISH:

POST RAILS, BASE PLATES, AND SPLICE TUBES SHALL RECEIVE A FINISH COAT COLOR BLACK, FEDERAL COLOR ID #17038.

MATERIALS:

STRUCTURAL STEEL TUBING	ASTM A 500 GARDE B GALVANIZED
POST AND BASE PLATE	AASHTO M 270 GRADE 36 GALVANIZED
ANCHOR BOLTS	ASTM A 449 GALVAINIZED
NUTS, BOLTS, AND WASHER	ASTM A 325 GALVANIZED

GENERAL NOTES:

1. RAILS SHALL BE CONTINUOUS OVER A MINIMUM OF FOUR POSTS, IF POSSIBLE. IF NEED, HSS 8"x3"x¼" RAILS MAY BE CONNECTED IN THE SHOP BY USING TUBE-WELDED SPLICES, AS SHOWN IN THE PROVIDED DETAILS.
2. RAILS SHALL HAVE A TUBE SPLICE IN THE PANEL OVER A BRIDGE EXPANSION JOINT.
3. ANCHOR BOLTS SHALL BE SET WITH TEMPLATES. THE NUT SECURING THE POST BASE PLATE TO THE CONCRETE SHALL BE TIGHTENED TO A SNUG FIT AND GIVEN A ADDITIONAL ⅛ TURN AFTER STEEL IS IN PLACE.
4. ALL POSTS TO PLUMB WHEN PROFILE GRADE EXCEEDS 1.5%. FOR PROFILE GRADES LESS THAN 1.5%. POSTS SHALL BE SET PERPENDICULAR TO GRADE.
5. WELDING SHALL CONFORM TO THE REQUIREMENTS OF ANSI/AASHTO/AWS D.1.5, EXCEPT THAT WELDING OF THE TUBE-WELDED SPLICE SHALL CONFORM TO THE REQUIREMENTS OF ANSI/AWS D.1.1

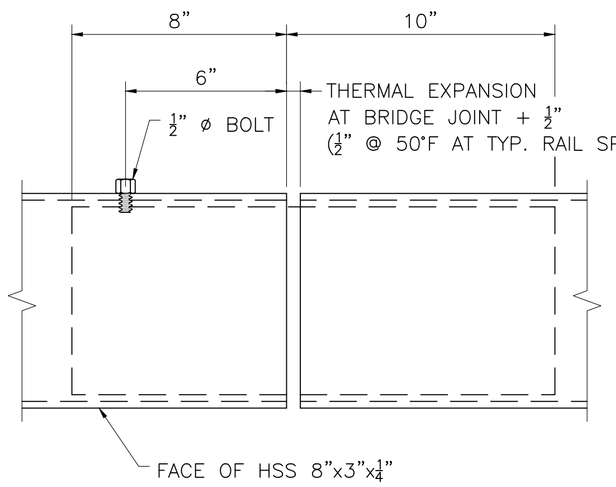

PLAN

RAIL POST DETAILS

SCALE: 3" = 1'-0"

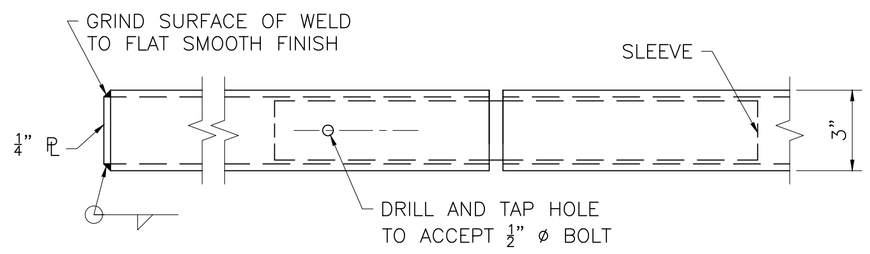

RAIL CAP REAR ELEVATION

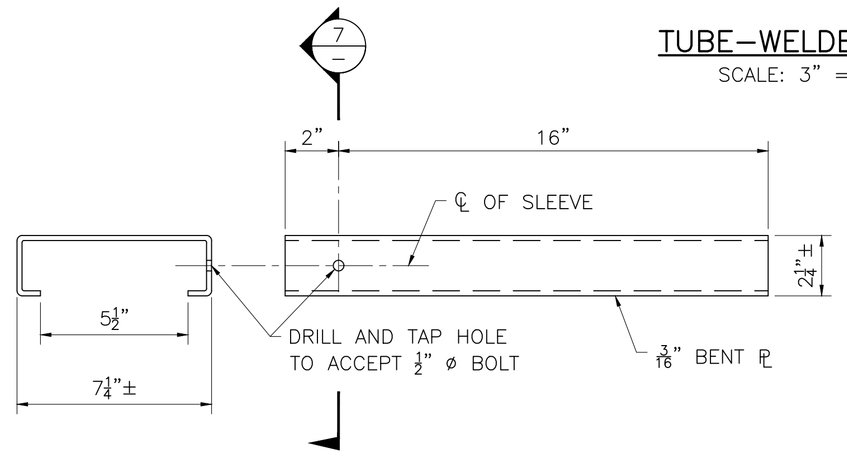

SECTION 7 SLEEVE

TUBE-WELDED SPLICE

SCALE: 3" = 1'-0"

TYPICAL SPLICE DETAILS

SCALE: 3" = 1'-0"

CM-TL3 BRIDGE RAILING

DATE	DESCRIPTION
10/28/2022	FIRST STRUCTURAL SUBMITTAL

THIS SHEET IS APPROVED FOR CONSTRUCTION BY MASSDOT
AUTHORIZED SIGNATORY: _____ STATE BRIDGE ENGINEER

USE ONLY PRINTS OF LATEST DATE

FIRST STRUCTURAL SUBMITTAL (S1) 10/28/2022

608930_BR12 (L04027).DWG Plotted on 28-Oct-2022 1:07 PM

Proposal No. 608930-128034

A00860 - 112

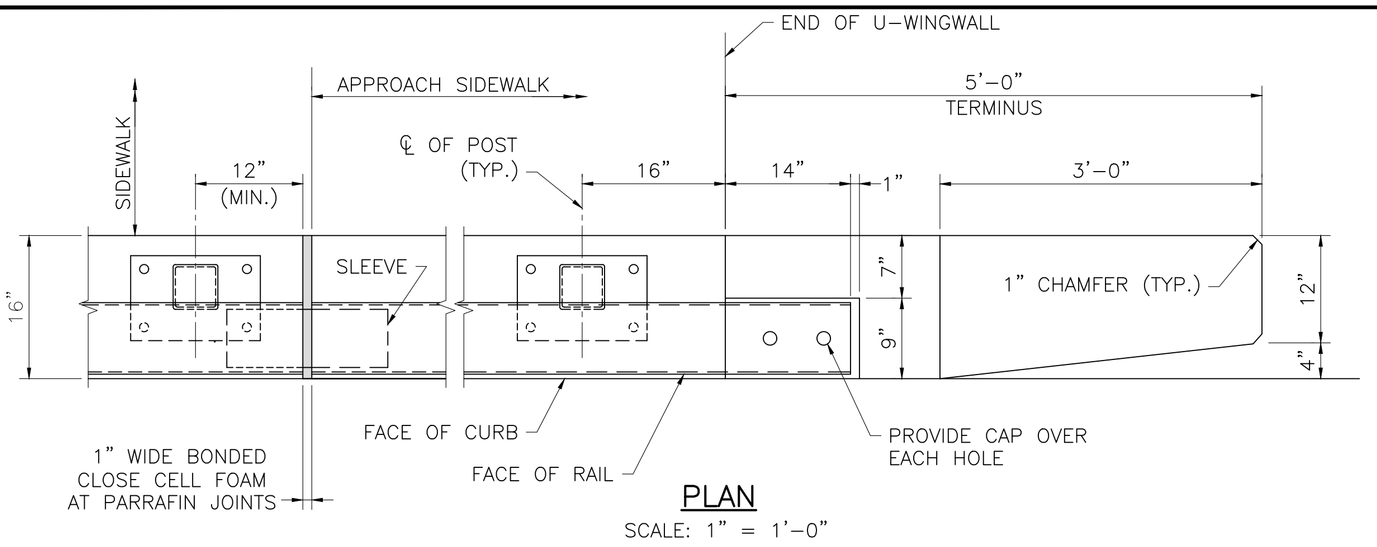

PLAN
SCALE: 1" = 1'-0"

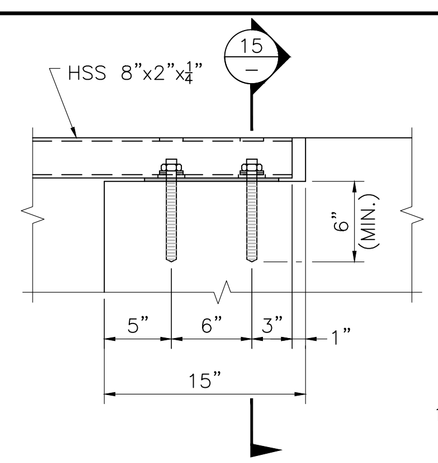

ELEVATION

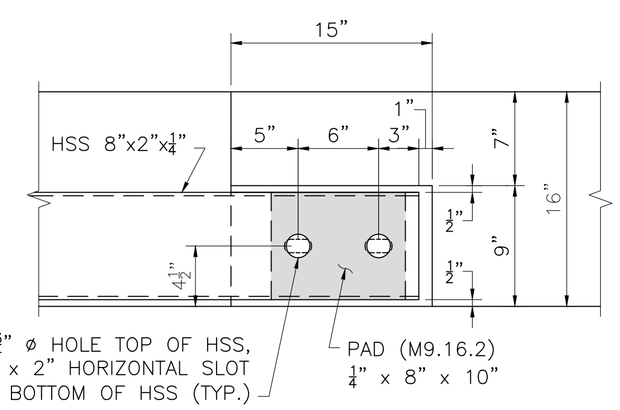

PLAN

RAIL ATTACHMENT
SCALE: 1½" = 1'-0"

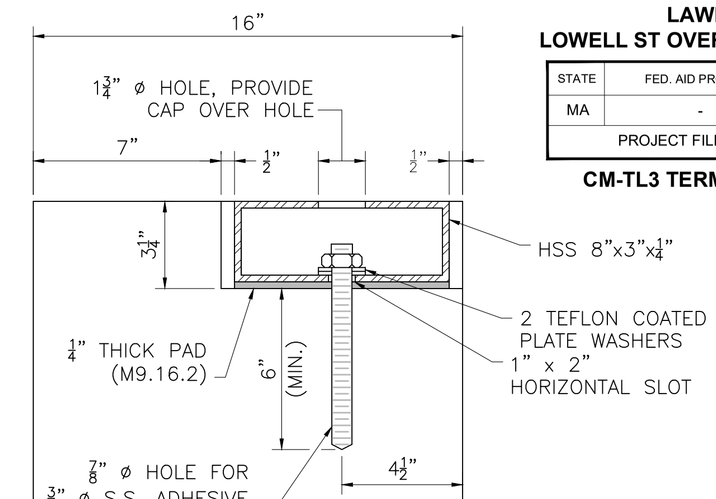

SECTION 15
SCALE: 3" = 1'-0"

LAWRENCE
LOWELL ST OVER LMRC RAIL TRAIL

STATE	FED. AID PROJ. NO.	SHEET NO.	TOTAL SHEETS
MA	-	24	26
PROJECT FILE NO.	608930		

CM-TL3 TERMINUS DETAILS

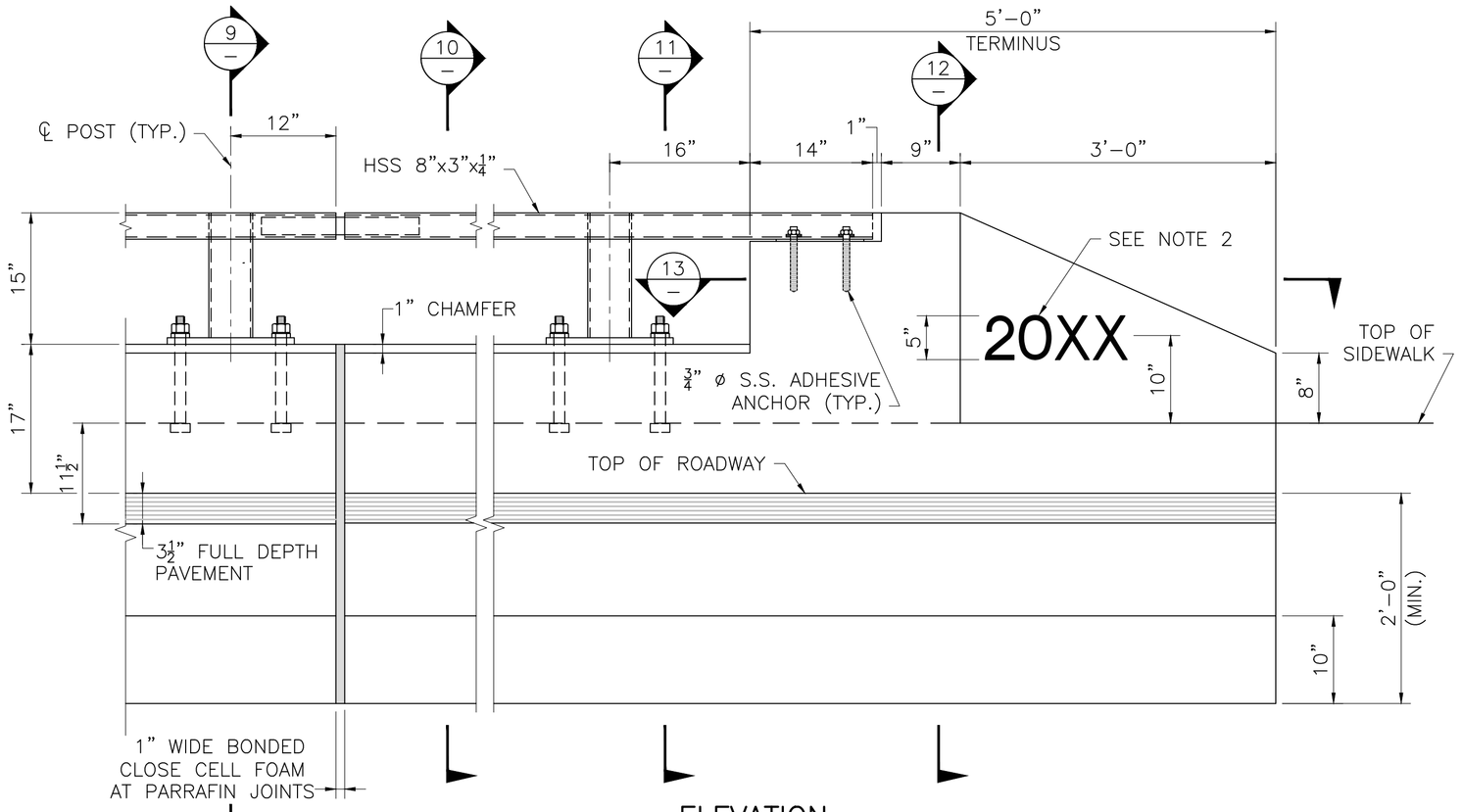

ELEVATION
SCALE: 1" – 1'-0"

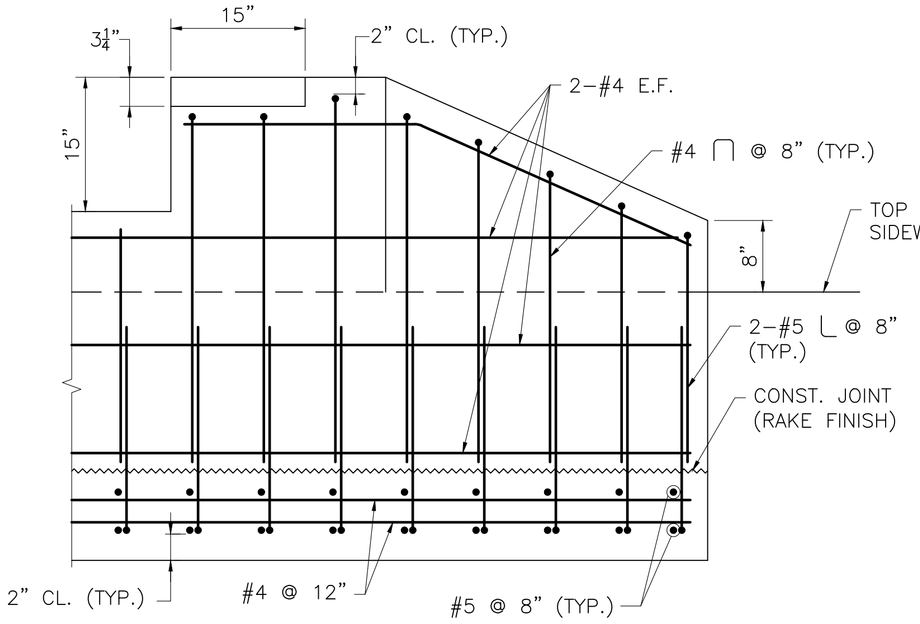

SECTION 14
SCALE: 1" – 1'-0"

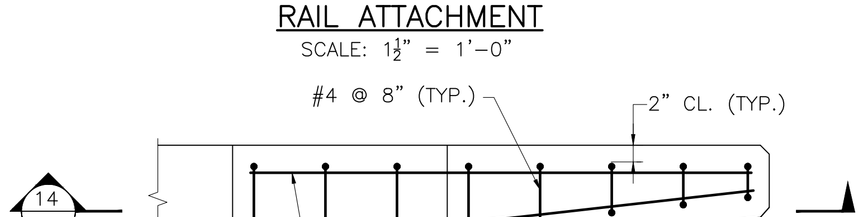

SECTION 13
SCALE: 1" – 1'-0"

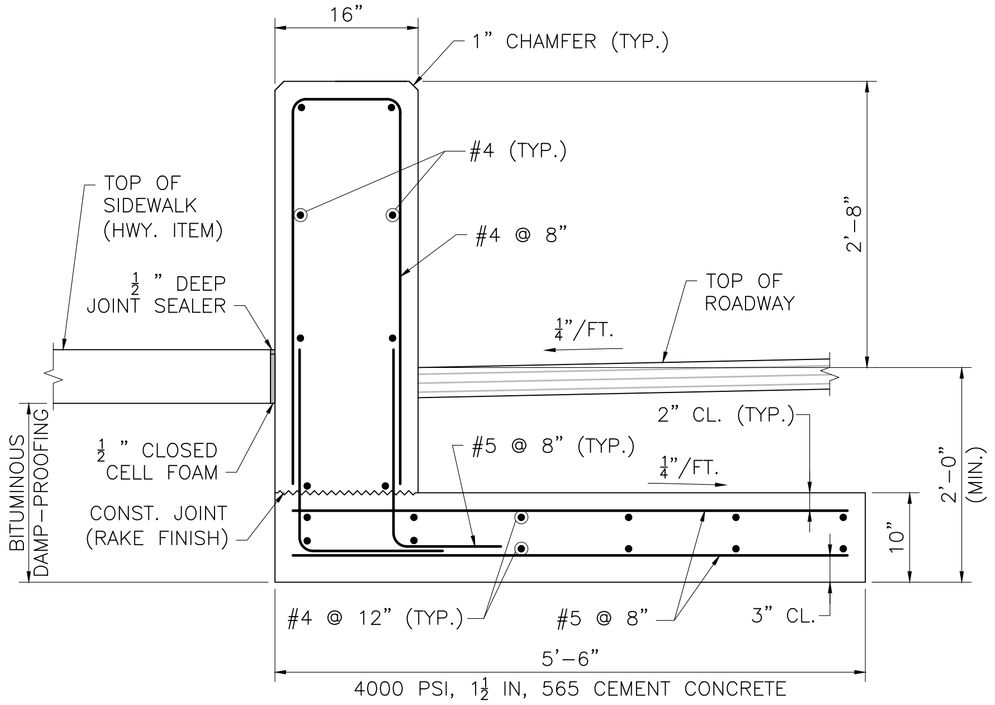

SECTION 12
SCALE: 1" – 1'-0"

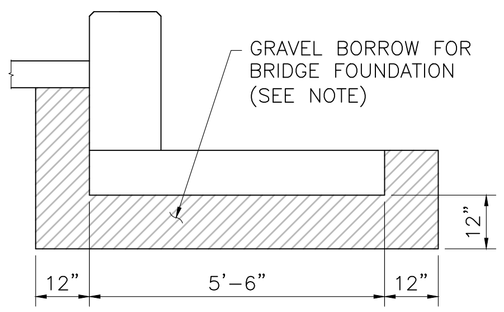

NOTE:
GRAVEL BORROW SHALL BE PLACED AND THOROUGHLY COMPACTED TO THE GRADE OF THE BOTTOM OF THE SLAB.

CM-TL3 RAILING BACKFILL
SCALE: ½" = 1'-0"

NOTES:
1. ALL CONCRETE FOR THE CM-TL3 RAILING AND TERMINUS SHALL BE 5000 PSI, ¾ IN, 685 HP CEMENT CONCRETE.
2. USE LATEST CONTRACT COMPLETION YEAR IN EFFECT WHEN THE FIRST TERMINUS IS CAST.

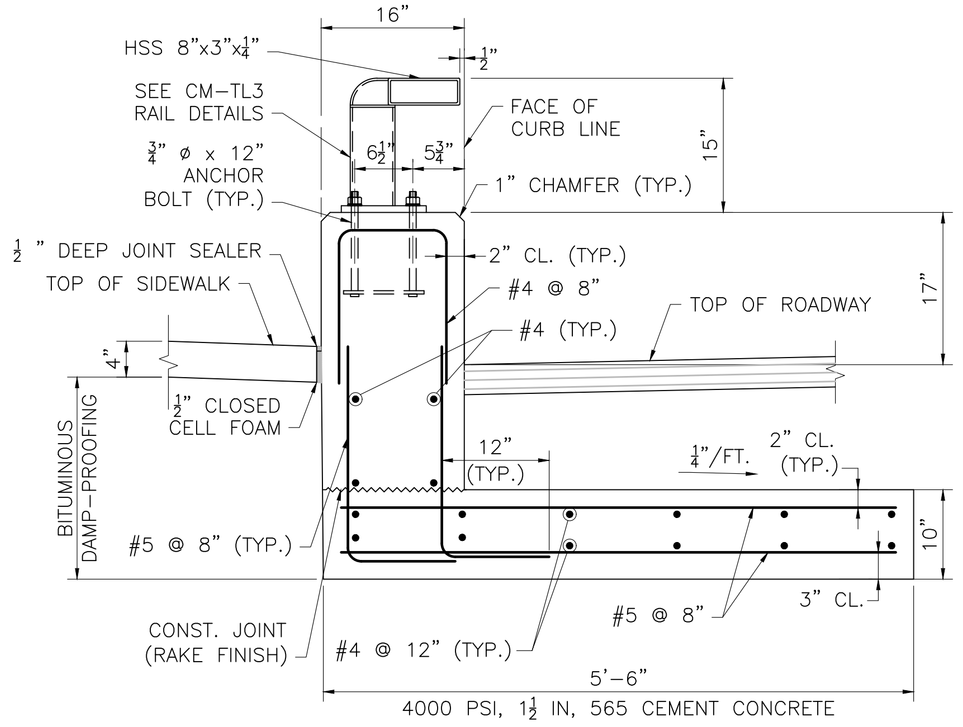

SECTION 9
SCALE: 1" – 1'-0"

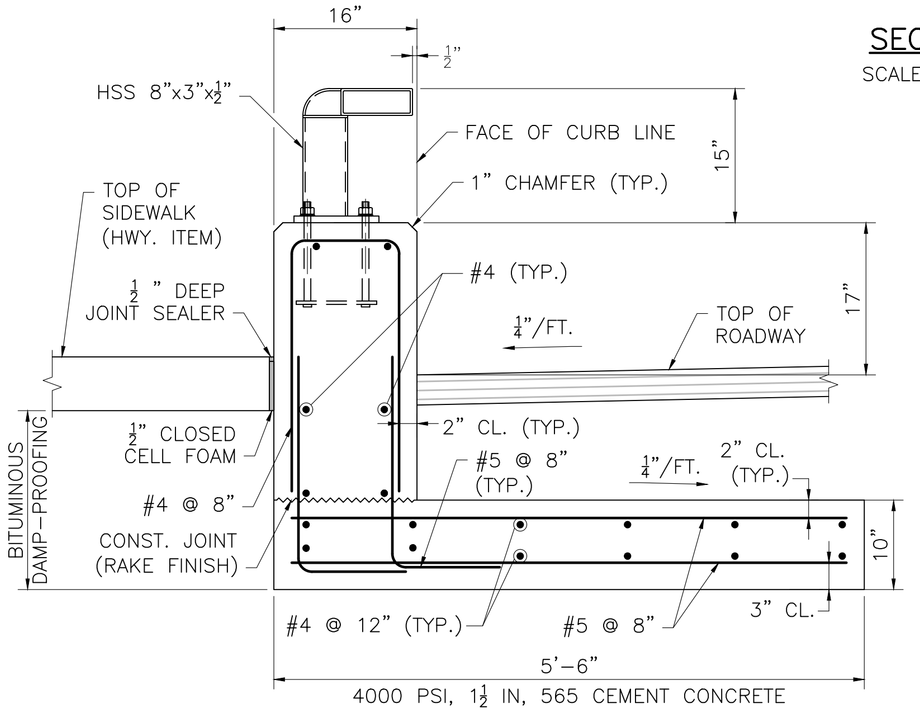

SECTION 10
SCALE: 1" – 1'-0"

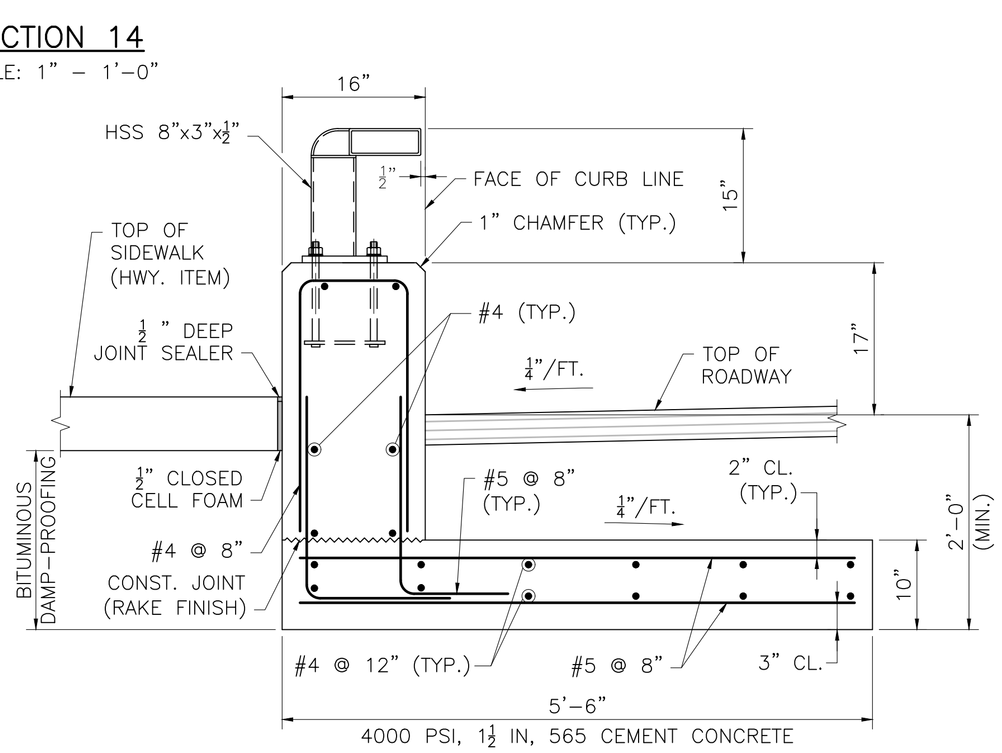

SECTION 11
SCALE: 1" – 1'-0"

10/28/2022	FIRST STRUCTURAL SUBMITTAL
DATE	DESCRIPTION

THIS SHEET IS APPROVED FOR CONSTRUCTION BY MASSDOT
AUTHORIZED SIGNATORY: STATE BRIDGE ENGINEER
USE ONLY PRINTS OF LATEST DATE

608930_BR13 (L04027).DWG Plotted on 28-Oct-2022 1:07 PM

FIRST STRUCTURAL SUBMITTAL (S1) 10/28/2022

Proposal No. 608930-128034
A00860 - 113

ATTACHMENT C – Alternative Transportation Corridor Lease Agreement

ALTERNATIVE TRANSPORTATION CORRIDOR LEASE AGREEMENT

BY AND BETWEEN

MASSACHUSETTS BAY TRANSPORTATION AUTHORITY

AND

CITY OF LAWRENCE

JANUARY 26, 2015

[ONLY FOR RIGHTS-OF-WAY NOT IN ACTIVE USE]

ALTERNATIVE TRANSPORTATION CORRIDOR
LEASE AGREEMENT BETWEEN
MASSACHUSETTS BAY TRANSPORTATION AUTHORITY
AND
CITY OF LAWRENCE, MA

This Lease Agreement (hereinafter referred to as the "Lease" or the "Agreement") entered into as of the 20 day of February, 2015, by and between the Massachusetts Bay Transportation Authority, a body politic and corporate and a political subdivision of the Commonwealth of Massachusetts, established pursuant to M.G.L.C. 161A, having its usual place of business at Ten Park Plaza, Boston, Massachusetts 02116 (hereinafter referred to as the "MBTA") and the City of Lawrence, of Essex County, a Massachusetts municipal corporation, having its usual place of business at 200 Common Street, Lawrence, Massachusetts 01840 (hereinafter referred to as the "MUNICIPALITY").

WITNESSETH THAT:

1. Agreement

In consideration of the mutual covenants and agreements herein contained, the parties hereto agree as follows:

2. Premises

The Premises consist of the parcel or parcels of land described in Exhibit A attached hereto, consisting generally of that certain railroad right of way known as the Lawrence to Manchester Branch in the Municipality of Lawrence, Massachusetts as shown on the Valuation Map 7.4 starting at Milepost 0.00 and ending at Milepost 1.4, Station 75+03.2. Within the Premises the MUNICIPALITY shall, with the consent of the MBTA, which shall not be unreasonably withheld or delayed, designate a contiguous corridor (the "Corridor") within which the uses permitted hereby shall be located.

3. Use of Premises

Subject to the terms and conditions herein, the MBTA hereby leases the Premises to the MUNICIPALITY for use as follows:

(a) The Corridor is to be used for purposes of the installation, operation, maintenance and use of a rail-trail as defined M.G.L. C.82 §35A and in the definition of Owner or Operator in M.G.L.C. 21E§2, and as amended from time to time, and as further defined under M.G.L.C.21E§2(d)(1), as a property converted from a former use as a railroad right-of-way to a revitalized use as a publicly owned, improved and maintained corridor for bicycle, pedestrian and other non-motorized public transportation, recreation and associated purposes and

(b) The remainder of the Premises shall be further be used solely by the Municipality exclusively to access, construct and maintain the Corridor, for ancillary uses which provide no revenue or other tangible benefit, and for such other uses as MBTA may permit by prior written consent.

Notwithstanding the preceding, this Lease is not intended to transfer land or easements for purposes protected by or to create a perpetual right to any use that may be subject to protection by Article XCVII (97), as amended of the Amendments to the Constitution of the Commonwealth of Massachusetts or by legislation enacted to pursuant thereto.

The MBTA reserves the right to reasonably require the MUNICIPALITY to install improvements (including but not limited to signs) designed to prevent or discourage those using the Corridor from entering onto the remainder of the Premises. The Corridor shall be open to the public, and no fee or other consideration shall be charged for use of the Premises.

The Municipality will diligently act to secure funds necessary to fulfill its obligations under the Lease for the design, bidding and the construction of the rail-trail project. The Municipality acknowledges that a failure to undertake efforts to secure funds may negate the municipal liability exemption for rail trails under M.G.L.C. 21E§2, and as amended from time to time

The Municipality also agrees that it will provide its plans for the use of the site sixty (60) days prior to the bidding to the MBTA for its approval, said approval which shall not be unreasonably withheld provided that the use is consistent with paragraph 3(a) and (3(b), above. If the plans for the site are not consistent with paragraph 3(a) and 3(b), above, the MBTA reserves the right to void the lease and demand return of the property. Said use shall also comply with the current (as of the commencement of construction) MA DEP Best Management Practices:

No testing shall be made of the soil by the Municipality on the Premises and no soil shall be removed from the Premises until this lease has been fully executed and entered into by an official Municipal authority (Exhibit B) and the MBTA, unless necessary to respond to a release of Hazardous Materials on the Premises. The Municipality shall be responsible for all costs associated with any such testing.

4. Term

The Term of this Lease shall be for a period of ninety-nine (99) years beginning on the date hereof; except that the MBTA may terminate this Lease upon two (2) years' written notice to the MUNICIPALITY, as provided by M.G.L. C.82 §35A. The Municipality acknowledges that that the Premises or a major portion thereof may be necessary for active railroad or other transportation purposes in the future. The MBTA may terminate this Agreement for the greater public good other than the Transportation Enhancement (the defined ATC) and the MBTA will not be required to provide any reimbursement whatsoever for said termination. The MBTA may also terminate this Lease with respect

to any part of the non-Corridor portion of the Premises with one (1) year's written notice for any reason so long as the use to be made of that portion will not substantially interfere with the public use of the Corridor for the uses stated above.

5. Condition of the Premises

The MUNICIPALITY has inspected the Premises, accepts the Premises "as is", and agrees the Premises are suitable for MUNICIPALITY's intended use. The MBTA makes no warranty of any kind, express or implied, as to the condition of the Premises or its suitability for the above uses. The MUNICIPALITY assumes all risk of entry on the Premises, including, but not limited to the presence of oil or hazardous material, if any, as defined in M.G.L.C. 21E, as amended from time to time.

6. Terms and Conditions of Lease

This Lease is subject to the following terms and conditions:

6.1 Indemnification and Release of MBTA

(a) The Municipality will not be required to indemnify the MBTA, unless specifically required by Federal law in connection with any grant for construction of a rail-trail, provided the Municipality has purchased environmental insurance naming the MBTA as an additional insured with minimum coverage limits of $3,000,000.00 per incident, a maximum deduction of $50,000.00 per incident, and a term of at least 5 years. If the Municipality is unable to or chooses not to purchase environmental insurance consistent with the aforementioned terms the following provisions will apply;

(1) the MUNICIPALITY, in accordance with official Municipal approval (Exhibit D), agrees to indemnify (to the extent permitted by law) defend (at the option of the MBTA) and save the MBTA harmless from and against any and all liabilities, losses, damages, costs, expenses (including reasonable attorneys' expenses and fees), causes of action, suits, claims, demands or judgments of any nature whatsoever including, without limitation, any accident, injury to, or death of any person or any damage to property occurring on the Premises (or any part thereof) or caused by something occurring on the Premises or that may be imposed upon, incurred by, or asserted against the MBTA by reason of any of the following occurrences:

(a) the activities of the MUNICIPALITY, members of the public or others present on the Premises; or

(b) the discovery of pre-existing Hazardous Materials, defined below, or the release of any Hazardous Materials on the Premises (or other property of the MBTA adjacent to the Premises) which is a result of (i) the MUNICIPALITY'S activities hereunder including the activities of those present from time to time on the Premises, or (ii) the migration from land now or previously

owned, leased, occupied or operated by the MUNICIPALITY or for which the MUNICIPALITY is a potentially responsible party as defined under Chapter 21E, defined below; or

(2) any failure of the MUNICIPALITY to perform or comply with any of the terms hereof, or of any contracts, agreements or restrictions, statutes, laws, ordinances or regulations affecting the activities or any part thereof.

Notwithstanding anything in the previous paragraph, the MUNICIPALITY does not agree to indemnify the MBTA for claims arising from natural or man-made disasters, injuries that occurred prior to the execution of this Lease, war, civil unrest or claims arising from the exercise of rights expressly reserved by the MBTA under this agreement.

"Hazardous Materials" is defined to be "oil," "hazardous materials," or "hazardous wastes" as those terms are defined in Massachusetts General Laws Chapter 21E ("Chapter 21E"), as from time to time amended, and the regulations promulgated pursuant thereto, including the Massachusetts Contingency Plan, 310 CMR 40.0000 et seq. (the "MCP") and as further defined in all other applicable state and Federal laws regarding Hazardous Materials.

For the purposes of this Lease, the term "applicable laws" with regard to environmental laws and/or Hazardous Materials means, without limitation, all applicable laws, statutes, codes, acts, ordinances, orders, judgments, decrees, injunctions, rules, regulations, permits, licenses, authorizations, directions and requirements, of all governments, departments, and offices relating in any way to the control and/or abatement of environmental pollution and environmental hazards that now or at any time hereafter may be applicable.

(3) The MUNICIPALITY hereby releases the MBTA from any responsibility for the MUNICIPALITY'S losses or damages related to the condition of the Premises. The MUNICIPALITY covenants and agrees that it will not assert or bring, nor cause any third party to assert or bring, any claim, demand, lawsuit or cause of action (whether by way of original claim, cross claim, counterclaim, contribution claim, indemnification claim, third-party claim or fourth-party claim) (hereinafter "Claims") against the MBTA including, without limitation, claims for response actions, response costs, assessments, containment, removal and remedial costs, governmental oversight charges, including any overhead or response action costs incurred or assessed by DEP, fines or penalties, permit and annual compliance fees, reasonable attorney and expert fees, natural resource damages, property damages, including diminution in property value claims, and personal injury damages and damages related to a person's illness or death relating to, or arising from, the MUNICIPALITY'S use of the Premises (or the use of the Premises by those permitted onto the Premises by the MUNICIPALITY) pursuant to this Lease.

(4) The MUNICIPALITY shall be timely notified, in writing, by the MBTA of the assertion of any claim against it that the MUNICIPALITY has agreed to indemnify as stated above (the "Indemnified Claim").

(a) If the MBTA decides to itself conduct the defense of an Indemnified Claim against it or to conduct any other response itself, the MUNICIPALITY shall cooperate therewith and reimburse the MBTA for all reasonable costs and expenses (including, without limitation, reasonable attorney's fees and expenses) incurred by the MBTA in connection with the MBTA's defense of the Indemnified Claim against it and/or the conduct of all response actions, including, without limitation, those required by Chapter 21E and the MCP.

(b) If the MBTA decides to have the MUNICIPALITY defend the claim or handle the response action, the MBTA shall notify the MUNICIPALITY of that decision in writing, and the MUNICIPALITY shall bear the entire cost thereof and shall have sole control of the defense of any Indemnified Claim and all negotiations for its settlement or compromise provided that the MBTA is fully indemnified by the MUNICIPALITY and provided further that the settlement or compromise shall not include the admission of guilt (or comparable plea), wrongdoing or negligence or the permitting or imposition of civil or criminal penalties or indictments, or the entering of consent decrees or orders of any kind by the MUNICIPALITY on behalf of the MBTA or any other action that would materially prejudice the rights of the MBTA without the MBTA's express written approval. The MBTA may at any time assume defense of any claim by notice to the Municipality and shall cooperate with the MUNICIPALITY in the defense of any Indemnified Claim.

If any response action due to the presence of Hazardous Materials or the threat of release of Hazardous Materials onto the Premises (or other property of the MBTA which abuts the Premises) is performed by the MUNICIPALITY, the response action shall be performed in accordance with Section 6.2.

If the MBTA determines in good faith for any reason, any indemnification herein of the MBTA by the MUNICIPALITY proves ineffective, the MBTA shall have the right to immediately terminate this Lease. The provisions of this Section 6.1 shall survive the termination or expiration of this Lease.

(c) For purposes of this Section, the term "MBTA" shall include the MBTA and its directors, officers, employees, agents and any legislatively approved entity that may succeed the MBTA. For the purposes of This Section the term "MBTA" expressly does not include easement holders, MBTA lessees, or licensees or successors to any real property of the MBTA

through sale, exchange or gift.

(d) The MBTA reserves the right to lease, assign, pledge and otherwise alienate all or part of the premises to third parties ("Third party Transferee's") and to retain all consideration therefore; provided that such lease, license, mortgage, assignment, or other facility of transfer is conditioned upon any third Party Transferee: (a) not unreasonably interfering with the Municipality's use of the Premises and (b) fulfilling obligations to provide the Municipality insurance under Section 9.2. Any such transfer shall not relive the MBTA or the Third Party Transferee from any obligations it may have under this Agreement.

6.2 Remediation Obligation of the MUNICIPALITY

During the design, construction and operation of the rail trail, the Municipality shall follow the provisions of BMP's for Controlling Exposure to Soil during the Development or Rail Trails promulgated by the Massachusetts Department of Environmental protection in March 2004.

Whenever the MUNICIPALITY is responsible for the remediation of Hazardous Materials on or below the Premises by law or pursuant to this Lease, the MUNICIPALITY, upon written demand of the MBTA, shall conduct at its sole cost and expense (or, at the MBTA's election, reimburse the MBTA for the cost and expense incurred by the MBTA in connection with the MBTA'S conduct of), all response actions required by Chapter 21E and the MCP with respect to the Hazardous Materials (including the hiring of a Licensed Site Professional).

Any such response action, if performed by the MUNICIPALITY, shall be performed in accordance with Chapter 21E, the MCP, any other applicable statutes and regulations, and in accordance with plans and specifications approved by the MBTA, shall be completed in a timely manner to the reasonable satisfaction of the MBTA, and shall allow the MBTA to use the Premises, and/or adjacent or contiguous property, for its present use and/or any future use that the MBTA deems appropriate. The MUNICIPALITY shall also be responsible for the reasonable costs incurred by the MBTA in hiring consultants to review, supervise and inspect any plans, specifications, proposed method of work, installation, operation and results. Such costs shall be presumed to be reasonable if the MBTA (1) provides the MUNICIPALITY with a notice that it intends to hire a consultant, a scope of work and a budget and (2) solicits three (3) price proposals from three (3) eligible consultants.

For purposes of this Section, the term "MBTA" shall include the MBTA, and its directors, officers, employees, agents and any legislatively approved entity that may exceed the MBTA. Additionally, for purposes of this Section the "MBTA" does not include easement holders, MBTA lessees, or licensees or successors to any real property of the MBTA through sale, assignment, pledge, mortgage, exchange or gift.

6.3 Insurance

Prior to entry hereunder, and during the Term hereof, the MUNICIPALITY and its

consultants and contractors shall provide the MBTA, hereof, insurance *(notwithstanding the environmental insurance required pursuant to Section 6.1 above)* for the activities permitted hereunder and the MUNICIPALITY's covenant of indemnification in Section 6.1(a)(1) and 6.1(a)(3) hereinabove, with companies that are reasonably acceptable to the MBTA, as stated below, and which provide minimum liability coverage as follows:

(a) Commercial General Liability Insurance

Insuring the MBTA and the Premises and all activities allowed hereunder as well as the MUNICIPALITY'S indemnification obligations contained in Section 6.1(a)(1) and 6.1(a)(3) with a minimum liability coverage for personal injury, bodily injury and property damage with limits not less than One Million ($1,000,000.00) Dollars per occurrence and Three Million ($3,000,000.00) Dollars in aggregate. Umbrella liability coverage with limits of not less than Two Million ($2,000,000.00) Dollars covering all work performed must also be provided. Such insurance shall be written on an occurrence basis (as opposed to a claims-made basis) and name the MUNICIPALITY, MBTA and others hereinafter designated as additional insureds as their interests may appear. Such insurance may be subject to standard exclusions found in property and general liability insurance policies.

(b) Worker's Compensation Insurance

(i) For all Municipal contractors, insuring all persons employed by the MUNICIPALITY in connection with any work done on or about the Premises with respect to which claims for death or bodily injury could be asserted against the MBTA or the Premises with limits of liability of not less than those required by Massachusetts General Laws Chapter 152 as amended. The policy shall contain a clause waiving the company's right to subrogation against the MBTA if such a policy is commercial available, and

(ii) For all MUNICIPAL employees by providing evidence of an active workmen's compensation program for MUNICIPAL workers funded by the MUNICIPALITY, a copy of which is attached as Exhibit C.

(c) Automobile Liability Insurance

Automobile liability insurance with limits of not less than One Million ($1,000,000.00) Dollars covering all owned, non-owned, hired, rented or leased vehicles or the MUNICIPALITY.

The required insurance coverages herein specified shall be placed with insurance companies licensed by the Massachusetts Division of Insurance to do business in the Commonwealth of Massachusetts and having a Best's rating of B+ or better; shall be taken out before the Lease is commenced and be kept in full force and effect throughout the term of the Lease; shall be primary to and non-contributory to any coverages maintained by the MBTA; and shall require the MBTA be given at least thirty (30) days' advance notice in the event of any cancellation or materially adverse change in coverage. Prior to the inception date of the Lease and throughout the term, the MBTA shall be provided with certificates of insurance evidencing that such insurance policies are in place and provide coverage as required. The required insurance coverage's herein specified may be increased from time to time upon notice by the MBTA to such coverage's as the MBTA may then customarily require for similar circumstances. Each

of the MUNICIPALITY's contractors and agents whole employees enter onto the Premises shall have similar policies covering their employees. The MUNICIPALITY shall be responsible for seeing that its contractors and consultants are properly covered by insurance.

In the event of the cancellation of any policy during the term of this Lease, or the failure to keep in effect the insurance required by this section, the MBTA may, without further notice and at its option, procure or renew such insurance on account of the MUNICIPALITY. The MUNICIPALITY agrees to repay such MBTA expense, with interest thereon at the rate of eighteen (18%) percent annually as an additional fee.

Notwithstanding any other provision of this section 6.3, the MUNICIPALITY reserves the right to propose to meet the requirement by adding such insurance coverage to existing policies subject to the terms and conditions of those existing policies or to obtain new policies containing terms and conditions generally included in policies provided to municipalities in Massachusetts.

6.4. Compliance with Laws

The MUNICIPALITY shall comply with, and shall cause all work performed to comply with, all applicable Federal, state, county, municipal and other governmental statutes, laws, rules, orders, regulations and ordinances. The MUNICIPALITY shall also be responsible for obtaining any and all applicable Federal, state, and/or local permits and/or approvals necessary to carry out the activities permitted hereunder.

6.5 Special Conditions

LEFT BLANK INTENTIONALLY

7. Maintenance

During the Term hereof, the MUNICIPALITY shall keep, repair, manage, operate, and maintain the entire Premises in good and clean order, operation, condition and repair. Except for any claim of damage arising from the exercise by the MBTA of the rights reserved to it, the MBTA shall have no responsibility whatsoever for the maintenance, repair or the condition of the Premises.

8. Utilities

Except as reasonably necessary for the operation of the alternative transportation use of the Corridor, no utilities shall be installed on the Premises by the MUNICIPALITY without the approval of the MBTA.

9. Reservation of Rights

9.1 Non-Exclusivity

(a) The MBTA makes no representations or warranty, express or implied, that the MUNICIPALITY shall have sole or exclusive use of the Premises. In the event other licenses, leases or easements have been or are granted or exist by reservations in deeds, the MUNICIPALITY shall be responsible for coordinating its work and activities with that of other licensees, grantees and other parties with interests in the Premises. The MBTA shall not be liable for delays, obstructions, or like occurrences affecting the MUNICIPALITY, arising out of the work of the MBTA or other licensees, grantees or parties in interest; provided, however, that the MBTA shall make reasonable efforts to mitigate impacts on the Use of the Premises. The MBTA will make a list available to the Municipality of any and all leases or licenses along the Corridor designated under this Lease.

(b) The MUNICIPALITY'S rights herein are granted subject to existing, easements, and rights of record to the extent that such easements rights and takings are still in effect and applicable. The MBTA explicitly reserves the right to all uses of the Premises not herein granted to the MUNICIPALITY, except that the MBTA shall not (and shall not grant to others the right to) do anything on the Premises that shall materially impede the permitted Use of the Premises except temporarily (e.g. while a pipe line is being installed or repaired).

The Municipality's rights herein are granted subject to existing leases and licenses to the extent that such rights are still in effect and applicable. The MBTA hereby agrees to provide the Municipality with copies of the documents that establish the location and term of existing licenses and leases. Upon completing a 25% design of the proposed rail trail, the MUNICIPALITY may request that the MBTA exercise any rights it may have to modify or terminate an existing lease or license that would prevent the creation of a contiguous Corridor. The MBTA shall make all reasonable attempts to fulfill such requests to create a contiguous corridor.

(c) The MUNICIPALITY expressly agrees that any revenues obtained from the leasing, licensing, or the granting of rights for any use of the Premises to any utility or other entity shall belong solely to the MBTA.

The MUNICIPALITY shall not be entitled to impose any fees, charges, requirements for betterments, linkage payments or other benefits to the MUNICIPALITY on any lessee, licensee or grantee of the MBTA or any other party either for installations on the Premises or on public way crossings along the Premises (except those fees normally charged by the MUNICIPALITY for engineering and environmental review, if any). If despite this section the MUNICIPALITY does receive some such benefit, then the MBTA shall be paid the fair market value of that benefit by the MUNICIPALITY.

(d) The Municipality expressly agrees that if there is any encroachment onto the Premises by a third-party, the MBTA will have the sole right to cure said encroachment and to obtain revenue from such cure or to permit such encroachment, provided that such cure does not substantially interfere

with the Municipality's use of the Corridor. Notwithstanding the preceding, to the extent that the encroachment is on the Corridor, then the Municipality shall have the right to expel such encroacher.

9.2 Utility and Communication Lines and Emergency Access

The MBTA expressly reserves all of its rights in the Premises for itself, its successors and assigns, to install, maintain, repair, replace and remove aerial, surface and subsurface utility and communication lines, wires, antennas and conduits in, on, under or above the Premises as well as the right to lease, license and/or grant easements for such utility and communication rights to third parties; except that the MUNICIPALITY shall have the rights specifically granted herein. The MBTA shall take all necessary safety measures including, but not by way of limitation, notification to the MUNICIPALITY of its intention to perform (or have performed) such installation and/or maintenance, the erection of barricades, as shall be reasonably required to protect persons performing such work and construction, as well as members of the public, from injury or damage caused by, or resulting from, any entry, work or construction performed by the MBTA or its contractors, licensees, lessees, grantees (and their contractors) pursuant to this Section. The MBTA shall, at its cost and expense, return the Premises to a condition in which the Premises can be used for the purposes for which they were used before the work pursuant to this paragraph, if its contractors, licensee, lessees, or grantees, as the case may be, fail to do so.

Prior to entry, the MBTA shall require that any contractor, licensee, lessee or grantees provide the Municipality, during the Term thereof, insurance of the activities permitted by the MBTA, to the same extent and on the same terms that the MBTA is insured. The Municipality shall be named as an additional insured on any general liability policy. All policies shall waive the right of subrogation for any claim that may be made against the Municipality.

10. Security and Operations

The MBTA shall have no obligation to provide security services or lighting at the Corridor. The MUNICIPALITY shall be responsible for providing public safety and emergency services for the Corridor. The MUNICIPALITY may install lighting and adopt time of use and other restrictions applicable to the public.

11. Default

If the MUNICIPALITY defaults under any of its covenants and obligations contained in this Lease including, without limitation, the failure to fully indemnify the MBTA and its related parties as provided in Section 6.1, and such default is not cured by the MUNICIPALITY within thirty (30) days after notice, the MBTA may elect, in order to preserve the public's usage and access to the Premises and to ensure the public's safety, security and enjoyment, to pursue any or all of the following remedies: (i); without obligation, cure said default, which cure may include, without limitation, entry upon the Premises for purposes of maintenance thereof, and invoice the MUNICIPALITY for the cost of such cure, which invoice the MUNICIPALITY shall

promptly pay; (ii) if the MUNICIPALITY shall continue to remain in default and/or fail to pay the MBTA after such notice, the MBTA may remove the custody and management of the Premises from the MUNICIPALITY in accordance with the provisions of this Lease and transfer said management and control of the Premises by a new lease agreement to another qualified party for that period remaining under this Lease as provided in Section 4, and the MBTA shall seek reimbursement from the MUNICIPALITY of all necessary and reasonable costs of management so incurred by the MBTA; and/or (iii) seek specific performance or other equitable relief from a court of competent jurisdiction and exercise any available remedy at law or in equity. In the event the MBTA shall seek removal of the MUNICIPALITY from the management and control of the Premises, no party other than the MUNICIPALITY shall be deemed qualified to assume such management and control, without the prior written approval of the Massachusetts Highway Department and the Federal Highway Administration (FHWA), in acknowledgement of the significant federal-aid Investments in the construction of the rail-trail by the MUNICIPALITY undertaken as required under FHWA transportation enhancement policies and guidelines. In any event the Premises shall remain as an alternative transportation corridor in keeping with Section 3 [Use of Premises (Supra)] and provide for the access and enjoyment for the public for the duration of the Term as defined in Section 4, under the management and control of the MBTA, if necessary, until the execution of a new lease agreement or some other preliminary agreement by the MBTA with another duly selected qualified party. The MBTA shall exercise its right to block access to the Premises from the public only in the event of a continuing public safety situation and the failure of the MUNICIPALITY to undertake immediate action. No delay or failure by the MBTA in exercising its rights and remedies in any one instance shall constitute a waiver of such rights and remedies in any other instance. MBTA's remedies hereunder shall be cumulative and not exclusive to any other available remedy.

12. Condition of the Premises at Termination

The MUNICIPALITY agrees to deliver up the Premises to the MBTA at the expiration of the Term hereof in as good condition as the Premises were after the MUNICIPALITY-installed improvements were made, reasonable wear and tear excepted. Notwithstanding the preceding, if the MBTA is terminating this Lease because it plans to use the Premises for transportation purposes, the MBTA may require The MUNICIPALITY to restore the Premises to the grade existing at the commencement of this Lease.

13. Existing Utilities

The Municipality acknowledges that there may be surface and subsurface utilities on and adjacent to the Premises and agrees to exercise extreme caution in performance of the scope of work. The Municipality shall comply with Massachusetts General Laws, Chapter 82, Section 40 (said statute also known as the "Dig Safe" law) and the regulations promulgated pursuant thereto including but not limited to the Code of Massachusetts Regulations, more particularly, 220 CMR 99.00 et seq. To the extent the MBTA, or parties acting in behalf of the MBTA, locate and mark railroad utilities in the railroad rights of way and appurtenant thereto, the Municipality shall be responsible for

payment to such parties for such services which may include, but not be limited to, locating and marking utilities, facilities and appurtenances thereto serving the railroad line(s) or used in connection with services or operations of the MBTA. Any damage to such utilities caused by the Municipality shall be the sole responsibility of the Municipality. If the Municipality does not immediately repair any utilities it has damaged, the MBTA, without being under any obligation to do so and without waiving the Municipality's obligation hereunder, may repair any utilities damaged by the Municipality immediately and without notice in case of emergency. In the event the MBTA exercises such right, the Municipality shall pay to the MBTA immediately upon demand all of the MBTA's cost of performing such repairs plus a fee equal to twenty-five percent of the MBTA's cost of performing such repairs to reimburse the MBTA for its administrative costs.

The MBTA reserves the right to remove the rail and agrees that if it chooses to do so, said removal shall be within 180 days of the date the MUNICIPALITY notifies the MBTA to be the date of the trail construction commencement The MUNICIPALITY shall be responsible for removal and disposal of all other rail infrastructure.

14. Notice of Project Completion and Record Drawings

Upon completion of its work, the Municipality shall provide written notice ("Notice of Project Completion") to the MBTA Railroad Operations Department of the date of project completion. The Municipality shall also provide the MBTA Railroad Operations Department with one reproducible "As-Built" copy of each approved construction drawing marked to indicate all changes and deviations from the original approved plans and recording the final conditions of the Premises ("Record Drawings") upon completion of the work authorized hereunder. All Record Drawings shall be received and accepted by the MBTA prior to final inspection. The Notice of Project Completion and the Record Drawings shall be delivered to:

Chief, Engineering and Maintenance
MBTA Railroad Operations Department
32 Cobble Hill Road
Somerville, MA 02143

15. Results

If the Municipality conducts certain investigations on MBTA owned land, then the Municipality agrees to provide to the MBTA, at no cost, a copy of the results of such investigations (including data and analysis) and all other work conducted under this Lease in both hard copy form and in a digital format specified by the MBTA regardless of whether the report was prepared by the Municipality, its agent, consultant or contractor, or prepared on behalf of the Municipality. All results and reports shall be provided to the MBTA within ten (10) days of receipt by the Municipality. The Municipality agrees to consult with the MBTA prior to contacting any governmental entity, regarding any information, results of analysis or reports regarding the Premises. The Municipality shall

give the MBTA a copy of any reports or notifications, including but not limited to release notifications, prior to submitting the same to any governmental entity.

16. Construction and Access Plan

The Municipality shall submit a plan and detailed specifications (including the materials to be used) and the proposed methods of performing the work, or any part thereof (the "Plan") to the MBTA. The Municipality shall not enter the Premises until the Plan has been approved by the MBTA, which approval shall not be unreasonably withheld. The scope of work for said construction, installation, maintenance, operation and/or replacement will be more fully defined in the approved Plan, which approved Plan will automatically be incorporated herein by reference and made part of this Lease. The Municipality shall also provide the MBTA with a detailed schedule of times when the Municipality, its employees, contractors, subcontractors, or agents would like to be on the Premises to undertake the scope of work (the "Access Plan"). The MBTA shall have full power to make a final determination of when the Municipality may be on the Premises as it is necessary to coordinate the work of all those desiring or having the right to access the Premises.

17. Contracts for Improvements

All contracts for the construction or installation of the improvements at the Premises shall require:

(a) that all contractors and subcontractors provide labor that can work in harmony with other elements of labor employed or to be employed at or near the Premises.

(b) insurance coverage and suretyship reasonably satisfactory to the MBTA:

(c) that all contractors or subcontractors comply with all applicable provisions of this Lease; and

(d) performance bonds and payment bonds in form and substance satisfactory to the MBTA, each of which shall name the MBTA, as an additional obligee and which shall be in the penal sum equal to the amount of the Municipality's construction contracts.

18. Notices

All notices required or permitted to be given hereunder shall be in writing and addressed as follows:

In the case of the MBTA to:
Massachusetts Bay Transportation Authority
10 Park Plaza, Room 5750
Boston, Massachusetts 02116
Attn: Assistant General Manager for Development

With a copy to:
MBTA Railroad Operations Directorate
Section Chief, Engineering and Maintenance
32 Cobble Hill Road
Somerville, Massachusetts 02143

With a copy to:
DESIGNATED REPRESENTATIVE
Massachusetts Realty Group
20 Park Plaza, Suite 1120
Boston, Massachusetts 02116
Attn: ATC Administration

And in the case of the MUNICIPALITY to:
Mayor,
City of Lawrence
200 Common Street
Lawrence, Massachusetts 01840

With a copy to:
City Attorney
City of Lawrence
200 Common Street, Suite 306
Lawrence, Massachusetts 01840

All notices, demands, requests, consents, approvals and other instruments required or permitted to be given pursuant to the terms hereof (hereinafter "Notice"), shall be in writing and shall be deemed to have been properly given when deposited in registered or certified United States mail, postage prepaid, return receipt requested, addressed, as described above or when delivered by messenger or overnight mail service to the correct addressee. Notice shall be deemed received when actually received or when the proffered Notice has been refused by the Addressee. The signature of an employee, servant or agent of the Addressee shall be determinative on the issue of actual receipt.

The MUNICIPALITY and the MBTA shall, at any time and from time to time, have the right to specify as their proper addresses for purposes of this Lease any other address or addresses giving fifteen (15) days' written notice thereof to the other party.

19. Nondiscrimination

With respect to its exercise of all rights and privileges herein granted, the MUNICIPALITY shall undertake affirmative action as required by Federal and State laws, rules and regulations pertinent to Civil Rights and Equal Opportunity unless otherwise exempted therefrom. The MUNICIPALITY agrees that it shall comply with any and all required affirmative action plans submitted pursuant to the directives of any Federal agency and in accordance with applicable Federal law and applicable state laws, rules and regulations.

The MUNICIPALITY shall use reasonable efforts to contact, encourage and utilize

minority and female business enterprises in the procurements of materials and services under this Lease.

The MUNICIPALITY shall not discriminate against any person, employee or applicant for employment because of race, color, religion, creed, national origin, age, sex, sexual orientation, disability/handicap or veteran status in its activities at the Premises, including without limitation, the hiring and discharging of employees, the provision or use of services and the selection of suppliers, contractors or subcontractors.

20. Work In Harmony

The MUNICIPALITY agrees that in any work performed in or about the Premises, it will employ only labor which can work in harmony with all elements of labor being employed by the MBTA on or adjacent to the Premises.

21. Assignment

The MUNICIPALITY shall not, without the prior written consent of the MBTA, transfer or assign this Lease or any part hereof. Such consent may be withheld in the sole discretion of the MBTA.

22. Entire Agreement

This Lease contains the entire agreement of the parties hereto with respect to the subject matter hereof, and no representations, inducements, promises, or agreements, oral or otherwise, between the parties hereto with respect to the subject matter hereof not embodied herein shall be of any force or effect.

SIGNATURES ON NEXT PAGE

IN WITNESS WHEREOF, the parties hereto, each for itself, its successors and assigns, have caused these presents to be executed, as a sealed instrument, by its officers, thereunto duly authorized.

Approved as to Form:

Charles Boddy
City Attorney
City of Lawrence

CITY OF LAWRENCE

BY: _____
Daniel Rivera
Mayor
City of Lawrence

COMMONWEALTH OF MASSACHUSETTS

Suffolk, ss. 1/26, 2015

On this 26th day of January, 2015 before me, the undersigned notary public, personally appeared Charles Boddy + Daniel Rivera, proved to me through satisfactory evidence of identification, which was personal knowledge, to be the person whose name is signed on the preceding page, and acknowledged to me that he signed it voluntarily for its stated purpose as Mayor & City Attorney of the City of Lawrence.

_____
Notary Public

Print Name: Elizabeth Delgado

My Commission expires: 6/27/19

ELIZABETH DELGADO
Notary Public
COMMONWEALTH OF MASSACHUSETTS
My Commission Expires
June 27, 2019

[Signatures continue on next page]

MASSACHUSETTS BAY TRANSPORTATION AUTHORITY

BY: _____
Mark E. Boyle
Assistant General Manager for
Real Estate and Asset Development

COMMONWEALTH OF MASSACHUSETTS

Suffolk, ss. 1/26, 2015

On this 26th day of January, 2015 before me, the undersigned notary public, personally appeared Mark E. Boyle, proved to me through satisfactory evidence of identification, which was personal knowledge, to be the person whose name is signed on the preceding page, and acknowledged to me that he signed it voluntarily for its stated purpose as Assistant General Manager for Real Estate and Asset Development of the Massachusetts Bay Transportation Authority.

_____
Notary Public

Print Name: CHERYL A. DUSTIN

My Commission expires: 3/12/2021

CHERYL A. DUSTIN
Notary Public
COMMONWEALTH OF MASSACHUSETTS
My Commission Expires
March 12, 2021

EXHIBIT A

PROPERTY DESCRIPTION

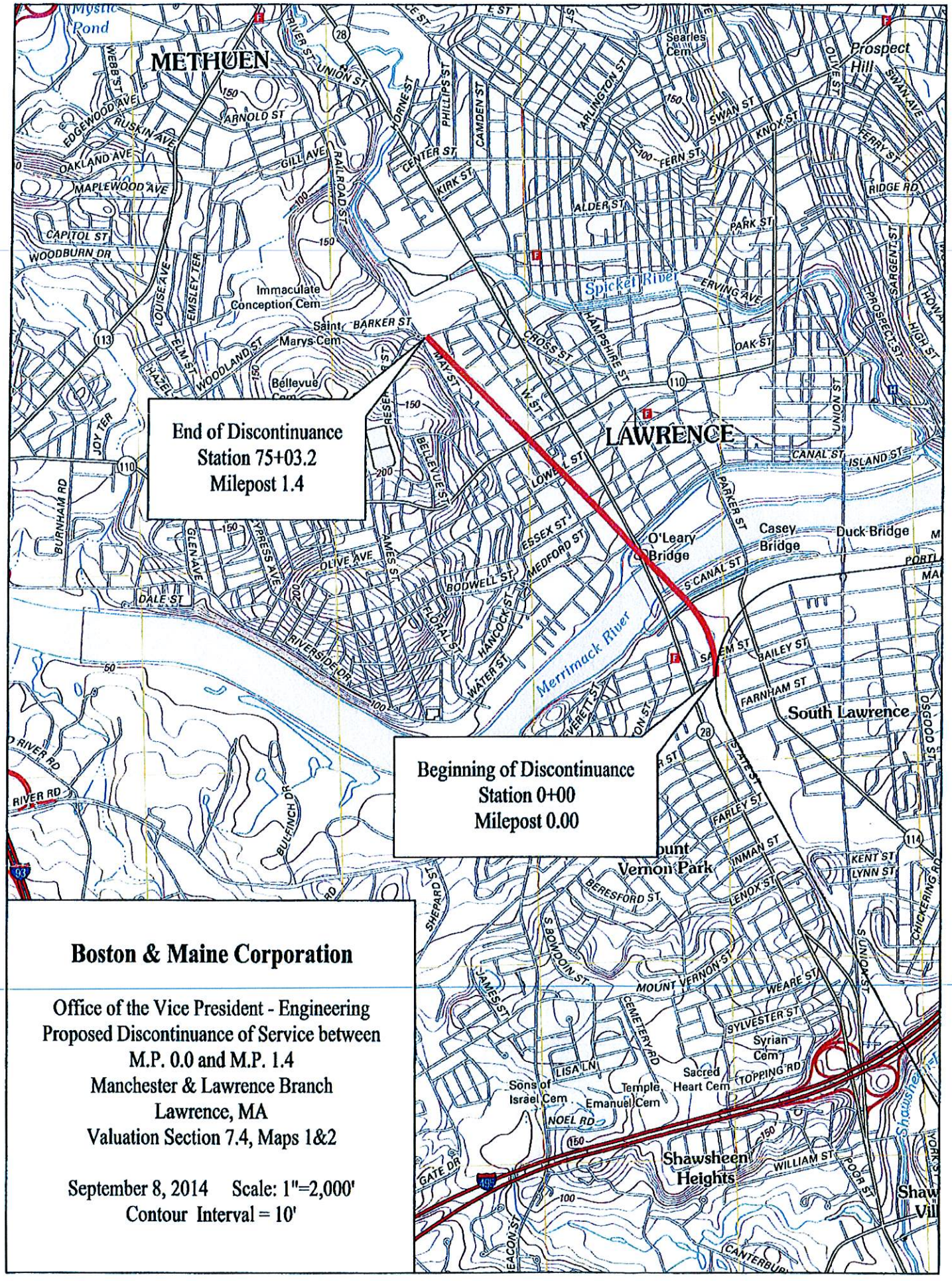
End of Discontinuance
Station 75+03.2
Milepost 1.4
Beginning of Discontinuance
Station 0+00
Milepost 0.00
Boston & Maine Corporation
Office of the Vice President - Engineering
Proposed Discontinuance of Service between
M.P. 0.0 and M.P. 1.4
Manchester & Lawrence Branch
Lawrence, MA
Valuation Section 7.4, Maps 1&2
September 8, 2014 Scale: 1"=2,000'
Contour Interval = 10'
METHUEN
LAWRENCE
South Lawrence
Mount Vernon Park
Shawsheen Heights
Spicket River
Merrimack River
Mystic Pond
Prospect Hill
Searles Cem
Immaculate Conception Cem
Saint Marys Cem
Bellevue Cem
Sons of Israel Cem
Temple Emanuel Cem
Sacred Heart Cem
Syrian Cem
O'Leary Bridge
Casey Bridge
Duck Bridge
Webb St
Edgewood Ave
Ruskin Ave
Oakland Ave
Maplewood Ave
Capitol St
Woodburn Dr
Arnold St
Union St
River St
Railroad St
Gill Ave
Center St
Kirk St
Horne St
Phillips St
Camden St
Arlington St
Swan St
Knox St
Fern St
Ridge Rd
Alder St
Park St
Oak St
Irving Ave
Hampshire St
Cross St
Canal St
Island St
Lowell St
Essex St
Medford St
Bodwell St
Water St
Hancock St
Bailey St
Farnham St
Farley St
Inman St
Lenox St
Beresford St
Mount Vernon St
Weare St
Sylvester St
Topping Rd
Noel Rd
Cemetery Rd
Lisa Ln
Kent St
Lynn St
Olive Ave
Dale St
Riverside Dr
Bullfinch Rd
River Rd
Burnham Rd
Joy Ter
Emsley Ter
Louise Ave
Elm St
Woodland St
Hazel St
Glen Ave
Cypress Ave
Ames St
Florence St
Bellevue St
Way St
Sargent St
Prospect St
High St
Howard St
Union St
Parker St
Osgood St
Chickering Rd
Shepard St
Gate Dr
Beacon St
Canterbury
Works St
Poor St
William St
Shawsheen
113
110
28
114
93
495

EXHIBIT B

MUNICIPAL BOARD VOTE

City of Lawrence

NOTICE OF CITY COUNCIL VOTE
PURSUANT TO CITY CHARTER SEC. 4.9

ITEM ADOPTED-SUMMARY OF PROCEEDINGS [documents of measure attached]

Doc. #	Description of Document	date subt'd	date advert'd	date apprvd	date presntd	10 day date	30 days/ 3.8(a)	effect. date 3.8(a)
397/14	Approval to Enter into a Lease w/the MBTA	12/02/14	n/a	01/13/15	02/04/15	02/17/15	02/12/15	02/12/15

MAYOR'S RESPONSE

DATE: _____ - THE ACTION OF CITY COUNCIL IS HEREBY: APPROVED: _____/ VETOED: _____

COMMENT(S):_____

_____

_____[attach additional pages if necessary].

_____

Mayor Daniel Rivera

CERTIFICATION(S) OF THE CITY CLERK

DATE RECEIVED BY CITY CLERK FROM MAYOR:_____ - Initialed by City Clerk: _____.

DATE: _____: I HEREBY CERTIFY THAT TEN (10) DAYS HAVE PASSED WITHOUT RESPONSE FROM THE OFFICE OF THE MAYOR. THE MEASURE IS THEREBY "APPROVED" PURSUANT TO SEC. 4.9 OF THE CITY CHARTER OF THE CITY OF LAWRENCE. _____ [initialed by City Clerk].

DATE: _____: I HEREBY CERTIFY THAT THIRTY DAYS HAVE PASSED SINCE THE DATE OF APPROVAL BY THE CITY COUNCIL AND THAT NO PETITION FOR REFERENDUM, AMENDMENT, OR REPEAL HAS BEEN FILED IN THIS MATTER. _____ [initialed by City Clerk].

ATTEST: _____**, William J. Maloney, City Clerk**

LAWRENCE CITY COUNCIL - RECORD OF PROCEEDINGS - DOC. 397 2014 page 1

TITLE: Approval to Enter into a Lease w/the MBTA - Abel Vargas, Business and Economic Development Director

DATE: 12-2-14 REF ☒ B&F; ☐ HSG ; ☐ ORD; ☐; PERS; ☐ ON/WHOLE ☐ PUB SAF; ☐ _____

DATE: _____ ☐ MOTION/ORD PUB HRG: 1ST _____; 2nd _____ ☐ PUB HRG ORD UNAN VOTE ; ☐ ROLL CALL VOTE ; [See Vote# ____]

DATE: 1-13-15 ☒ MOTION: 1ST KV; 2nd EB TO: ☒ APPRV; ☐ TABLE; ☐ REM TABLE ; ☐ WAIVE RL 3.8(a); ☐ RECONS; ☐ WITHDRAW; ☐ ORD PUB HRG; ☐ SUS. RULES OF COUNCIL & DECLAIR ITEM AN EMERGENCY; ☐ CHARTER OBJ. BY _____; ☐ TO: _____

☒ MOTION APPRVD; ☐ ~~WAIVE RULE 3.8(b)~~ EXPIRATION; ☒ BY UNAN. VOICE VOTE; ☐ DEFEATED; ☒ BY ~~ROLL CALL~~; [See Vote# 1]; ☐ _____

DATE: _____ ☐ MOTION: 1ST _____; 2nd _____ TO: ☐ APPRV; ☐ TABLE; ☐ REM TABLE ; ☐ WAIVE RL 3.8(a); ☐ RECONS; ☐ WITHDRAW; ☐ ORD PUB HRG; ☐ SUS. RULES OF COUNCIL & DECLAIR ITEM AN EMERGENCY; ☐ CHARTER OBJ.BY _____; ☐ TO: _____

☐ MOTION APPRVD; ☐ WAIVE RULE 3.8(b) EXPIRATION; ☐ BY UNAN. VOICE VOTE; ☐ DEFEATED; ☐ BY ROLL CALL; [See Vote# _____] ☐ _____

DATE: _____ ☐ MOTION: 1ST _____; 2nd _____ TO: ☐ APPRV; ☐ TABLE; ☐ REM TABLE ; ☐ WAIVE RL 3.8(a); ☐ RECONS; ☐ WITHDRAW; ☐ ORD PUB HRG; ☐ SUS. RULES OF COUNCIL & DECLAIR ITEM AN EMERGENCY; ☐ CHARTER OBJ. BY _____; ☐ TO: _____

☐ MOTION APPRVD; ☐ WAIVE RULE 3.8(b) EXPIRATION; ☐ BY UNAN. VOICE VOTE; ☐ DEFEATED; ☐ BY ROLL CALL; [See Vote# _____]

DATE: _____ ☐ MOTION: 1ST _____; 2nd _____ TO: ☐ APPRV; ☐ TABLE; ☐ REM TABLE ; ☐ WAIVE RL 3.8(a); ☐ RECONS; ☐ WITHDRAW; ☐ ORD PUB HRG; ☐ SUS. RULES OF COUNCIL & DECLAIR ITEM AN EMERGENCY; ☐ CHARTER OBJ. BY _____; ☐ TO: _____

☐ MOTION APPRVD; ☐ WAIVE RULE 3.8(b) EXPIRATION; ☐ BY UNAN. VOICE VOTE; ☐ DEFEATED; ☐ BY ROLL CALL; [See Vote# _____]

Vote # 1 date: 1-13-15	yes	no	absta	prest	absnt
RIGHT ▼					
Counc. Kendrys Vasquez [KV]	☒				
Counc. Marc Laplante [ML]	☒				
Counc. Roger Twomey [RT]	☒				
Counc. Estela Reyes [ER]	☒				
Counc. Sandy Almonte [SA]					☒
Coun. Oneida Aquino [OA]	☒				
Counc. Eileen O'Connor Bernal[EB]	☒				
Counc. VP Nilka Alvarez Rodriguez [AR]	☒				
Counc. Pres. Modesto Maldonado [MM]	☒				
LEFT ▲ TOTALS	8	0	0	0	1

Vote # date:	yes	No	absta	Prest	absnt
RIGHT ▼					
Counc. Kendrys Vasquez [KV]					
Counc. Marc Laplante [ML]					
Counc. Roger Twomey [RT]					
Counc. Estela Reyes [ER]					
Counc. Sandy Almonte [SA]					
Coun. Oneida Aquino [OA]					
Counc. Eileen O'Connor Bernal[EB]					
Counc. VP Nilka Alvarez Rodriguez [AR]					
Counc. Pres. Modesto Maldonado [MM]					
LEFT ▲ TOTALS					

Vote # date:	yes	no	absta	prest	absnt
RIGHT ▼					
Counc. Kendrys Vasquez [KV]					
Counc. Marc Laplante [ML]					
Counc. Roger Twomey [RT]					
Counc. Estela Reyes [ER]					
Counc. Sandy Almonte [SA]					
Coun. Oneida Aquino [OA]					
Counc. Eileen O'Connor Bernal[EB]					
Counc. VP Nilka Alvarez Rodriguez [AR]					
Counc. Pres. Modesto Maldonado [MM]					
LEFT ▲ TOTALS					

Vote # date:	yes	No	absta	Prest	absnt
RIGHT ▼					
Counc. Kendrys Vasquez [KV]					
Counc. Marc Laplante [ML]					
Counc. Roger Twomey [RT]					
Counc. Estela Reyes [ER]					
Counc. Sandy Almonte [SA]					
Coun. Oneida Aquino [OA]					
Counc. Eileen O'Connor Bernal[EB]					
Counc. VP Nilka Alvarez Rodriguez [AR]					
Counc. Pres. Modesto Maldonado [MM]					
LEFT ▲ TOTALS					

date	description	date	description	date	description	date	description

True Copy Attest: _____, William J, Maloney, City Clerk ☐ GO TO NEXT PAGE

updated:8-26-14

To City Clerk:

☒ **Council Document #** 397-14

☐ **New Committee Business**

COMMITTEE REPORT

12 / 17 / 2014

LAWRENCE CITY COUNCIL

CITY HALL
LAWRENCE, MASSACHUSETTS 01840

The Committee on BUDGET & FINANCE COMMITTEE recommends

☒ By a unanimous vote, that the City Council,

☐ By a _____ to _____ vote,

☐ _____

☒ Vote in favor of,

☐ Vote against,

☐ Pass a resolution in favor of,

☐ Vote on this matter without a Committee Recommendation for,

☒ Refer this matter to the FULL COUNCIL concerning,

☐ Direct the City Clerk to,

☐ Other _____

Full Council Favorable Recomm.

Document #397-14 Approval to Enter into a Lease w/the MBTA - Abel Vargas, Bus. + Economic Dev. Dir. (invited for 12-17-14)

Motion of Councilor Laplante and Councilor Aquino

10/A

CITY OF LAWRENCE
PERSONNEL DEPARTMENT

City Hall • 200 Common Street, Room 303 • Lawrence, MA 01840
Tel: (978) 620-3060 • www.cityoflawrence.com

FRANK BONET
DIRECTOR OF PERSONNEL

February 18, 2015

Beverly A. Scott, PhD.
General Manager
Massachusetts Bay Transportation Authority
10 Park Plaza
Boston, MA 02116

Re: Alternative Transportation Lease Agreement:
Worker's Compensation Program

Dear Ms. Scott:

I am writing on behalf of the City of Lawrence, in my capacity as Worker's Compensation Agent, in relations to the Worker's Compensation provision of section 6.3(b) (ii) of the Alternative Transportation Corridor Lease Agreement between the MBTA and the City.

The City of Lawrence has an active, self-insured worker's compensation program. The program has an office at 200 Common Street, Room 303, Lawrence, Massachusetts 01841. The telephone number is (978) 620-3065. The City allocated $225,000 to pay workers' compensation medical claims. The amount of claims varies from year to year based on the number of seriousness of injuries.

If you require any additional information regarding this program, please contact me at (978) 620-3063.

Sincerely,

Frank Bonet
Personnel Director

EXHIBIT C

WORKMEN'S COMPENSATION LETTER

Beverly A. Scott, Ph.D
General Manager
Massachusetts Bay Transportation Authority
10 Park Plaza
Boston MA 02116

Re: Alternative Transportation Corridor Lease Agreement:
Workmen's Compensation Program

Dear Ms. Scott:

I am writing on behalf of the City of _____ in relation to the Workmen's Compensation provision of Section 6.3(b)(ii) of the Alternative Transportation Corridor Lease Agreement between the MBTA and the City.

The City has an active, self-insured workmen's compensation program. The program has an office at_____. The phone number is_____. The City allocated $_____ in the Fiscal Year 2014 to pay workmen compensation claims. The amount of claims paid varies from year to year based on the number and seriousness of injuries.

If you require any additional information regarding this program please contact me at _____

Sincerely yours,

TBD

ATTACHMENT D – Wetland Delineation Report & Wetland Revisions

NOVER-ARMSTRONG ASSOCIATES, INC.

124 Main Street, Unit 2GG
Carver, Massachusetts 02330
Telephone 508.866.8383
Facsimile 508.866.9898

SDO-certified DBE & WBE
www.noverarmstrong.com

environmental consultants & engineers

April 25, 2017

Ronald Headrick, RLA
Greenman Pedersen Inc.
181 Ballardvale Street, Suite 202
Wilmington, MA 01887

Re: Resource Area Boundary Delineation
Manchester Lawrence Rail Corridor
Lawrence, Massachusetts
NAA File No: P4194

Dear Mr. Headrick:

In March and April of 2017, Nover-Armstrong Associates, Inc. (Nover-Armstrong) conducted resource area boundary delineations along segments of the former Manchester-Lawrence rail corridor in Lawrence, Massachusetts (the Site). This report describes wetland resource areas Subject to Protection under the Massachusetts Wetlands Protection Act (M.G.L. Chapter 131 Section 40 - *the Act*), the Lawrence Wetlands Protection Ordinance (Lawrence Municipal Code, Chapter 18.1), the federal Clean Water Act CFR (33 U.S.C. §1251 et seq (1972)), and the Massachusetts Clean Waters Act (MGL Chapter 21 Section 26-53), that exist on the site and methodology used to delineate their boundaries.

Site Description
The Site is located along the former Manchester-Lawrence railroad right-of-way (ROW) in Lawrence, Massachusetts. The ROW generally runs in a northwesterly direction and crosses the Merrimack River. The approximate limits of the Site are Merrimack Street at the southerly terminus and the Lawrence-Methuen town line at the northerly terminus. The Site also includes small segments of Merrimack Street, Broadway Street, Water Street, Essex Street, and Haverhill Street that extend west to southwest / east to northeast from their intersections with the ROW (Figure 1). Segments of the ROW on the southern extent of the Site boundary include a bridge over the Merrimack River, the Southern Canal, and the Northern Canal. The ROW is generally surrounded by multi-family residential and commercial developments.

According to the USDA Natural Resources Conservation Service – Soil Survey, mapped soils on the Site and in the vicinity of the Site are classified as Hinckley loamy sand, Hinckley and Windsor soils, Urban land, and Udorthents. Nover-Armstrong's field observations generally confirmed the soil types along the project corridor. The *Custom Soil Resource Report for Essex County, Massachusetts, Northern Part* is attached.

State jurisdictional resource areas identified on the Site include Bordering Vegetated Wetland (BVW); Bank (to perennial stream); Bank (to man-made channel); Land Under Water (LUW); Bordering Land Subject to Flooding (BLSF); and Riverfront Area (RA). The MassGIS database was used as the initial step in identifying critical areas on or within proximity of the site that would be examined more closely if construction activities are proposed. The table below describes selected environmentally critical categories as determined through MassGIS.

Table 1. Selected MassGIS Environmental Data Layers

Mapped Resource On or Within Proximity to Site	Yes	No
Area of Critical Environmental Concern		✓
NHESP Certified Vernal Pool		✓
NHESP Potential Vernal Pool		✓
NHESP Established Habitat of Rare Wildlife	✓	
NHESP Priority Habitat of Rare Species	✓	
Outstanding Resource Waters		✓
FEMA Flood Zones	✓	
Surface Water Protection Area		✓
Interim Wellhead Protection Area		✓
Zone II Wellhead Protection Area		✓

Source: MassGIS

Jurisdictional Wetland Resource Areas – Massachusetts Wetlands Protection Act

Site inspections were conducted by Nover-Armstrong's Wetland Scientists on March 10, 2017 to identify and delineate the boundary of existing wetland resource areas on the Site and in the immediate vicinity of the Site. Resource area boundaries were identified and delineated in accordance with methods developed by the Massachusetts Department of Environmental Protection's *Delineating Bordering Vegetated Wetlands Under the Massachusetts Wetlands Protection Act*, dated 1995 (the Act), as well as definitions set forth in the Wetland Regulations, 310 CMR 10.00. Several areas subject to protection under the Act exist on the site and are described below.

Bank (to perennial stream) – 310 CMR 10.54

According to 310 CMR 10.54(2), the definition of a Bank is the portion of the land surface which normally abuts and confines a water body, occurring between a water body and a vegetated bordering wetland and adjacent floodplain, or, in the absence of these, it occurs between a water body and an upland. The upper boundary of a Bank is the first observable break in the slope or the mean annual flood level, whichever is lower.

Nover Armstrong identified the resource Bank to perennial stream on the Site in association with the Merrimack River and the Spickett River. See Table 2: Bank (to Perennial Stream) Boundary Description for more details.

Table 2: Bank (to Perennial Stream) Boundary Description

Flag Series	Location	Description / Notes
B1 Series *Flags B1-100 to B1-106*	Southern Bank of the South Canal	The southern Bank of the South Canal consists of a man-made concrete retaining wall. The area surrounding the Bank was generally vegetated with glossy buckthorn (*Frangula alnus*), goldenrod (Solidago spp.), and upland grasses. The South Canal is approximately 65 feet wide, with an unknown depth.
B2 Series	Northern Bank of the South Canal	The northern Bank of the South Canal consists of a man-made concrete retaining wall. The area was void of vegetation. The South Canal is approximately 65 feet wide, with an unknown depth.
B3 Series	Southern Bank of Merrimack River	The southern Bank of the Merrimack River consists of a man-made three-stepped concrete wall series. The area was void of vegetation. In the vicinity of the Site, the Merrimack River is approximately 450 feet wide, with an unknown depth.

Flag Series	Location	Description / Notes
B4 Series	Northern Bank of Merrimack River	The northern Bank of the Merrimack River consists of a man-made concrete retaining wall. Vegetation surrounding the Bank consisted of Japanese Knotweed (*Fallopia japonica*), river birch (*Betula nigra*), and bittersweet (*Celastrus orbiculatus*). In the vicinity of the Site, the Merrimack River is approximately 450 feet wide, with an unknown depth.
B5 Series	Southern Bank of the North Canal	The southern Bank of the North Canal consists of a man-made concrete retaining wall. In the vicinity of the Site, he area was generally void of vegetation except for small amounts of upland grasses. The North Canal is approximately 80 feet wide, with an unknown depth.
B6 Series *Flags B6-100 to B6-108*	Northern Bank of the North Canal	The northern Bank of the North Canal consists of a man-made concrete retaining wall. In the vicinity of the Site, he area was generally void of vegetation except for small amounts of upland grasses. The North Canal is approximately 80 feet wide, with an unknown depth.
B7 Series *Flags B7-84 to B7-122*	Southern Bank of Spickett River	The southern Bank of the Spickett River was delineated. The Spickett River flows in a southeasterly direction, ultimately emptying into the Merrimack River. In the vicinity of the Site, the Spickett River is approximately 100 wide at its narrowest and 225 feet wide at its widest point, with an unknown depth. The Bank is generally vegetated with redosier dogwood (*Cornus sericea*), red maple (Acer rubrum), Oriental bittersweet, skunk cabbage (*Symplocarpus foetidus),* and sensitive fern (*Onoclea sensibilis*).

Bordering Vegetated Wetland (BVW) – 310 CMR 10.55

According to 310 CMR 10.55(2), the definition of BVW are freshwater wetlands which border on creeks, Rivers, streams, ponds and lakes and are areas where the soils are saturated and/or inundated such that they support a predominance of wetland indicator plants. The boundary of BVW is the line within which 50% or more of the vegetation community consists of wetland indicator plants and saturated or inundated conditions exist.

Nover-Armstrong identified one (1) area of BVW in proximity to the Site. See Table 3: BVW Boundary Description for more details. See attached US Army Corps vegetated wetland boundary delineation field data sheets for more details describing Nover-Armstrong's observations of evidence of hydrology, soils, and hydrophytic vegetation at specific data plots.

Table 3: BVW Boundary Description

Flag Series	Location	Description / Notes
WF1 Series *Flags WF1-100 to WF1-107*	Borders southern Bank of Spickett River; Adjacent to B7-Series (Flag No. B7-121)	The BVW can be characterized as a riverine emergent wetland that borders on the southern Bank of the Spickett River (B7 Series). This wetland boundary was established based on evidence of hydrology, including hydric soils, and presence of hydrophytic vegetation. The BVW is generally vegetated with redosier dogwood, broadleaf cattail (*Typha latifolia*), and Phragmites (*Phragmites australis*).

Land Under Water – 310 CMR 10.56

According to 310 CMR 10.56(2), the definition of LUW is the land beneath any creek, river, stream, pond or lake and may be composed of organic muck or peat, fine sediments, rocks or bedrock. LUW exists between the Bank boundaries below the mean annual low water levels of the Merrimack and Spickett Rivers. The boundary of LUW is the mean annual low water level.

Bordering Land Subject to Flooding– 310 CMR 10.57
According to the July 03, 2012 FEMA Flood Insurance Rate Map (FIRM) Number 25009C0208F, portions of the Site are located within FEMA Floodway FEMA Flood Zone AE, with base flood elevations (BFE) ranging from 35 in proximity to the Merrimack River to 58 in proximity to the Spickett River. Work conducted below the BFE is Subject to Jurisdiction under the Act.

Riverfront Area – 310 CMR 10.58
According to its definition at 310 CMR 10.58(3), the boundary of Riverfront Area (RA) is the area of land between a River's mean annual high-water line measured horizontally outward from the River and a parallel line located 200 feet away. A River is any natural flowing body of water that empties to any ocean, lake, pond, or other River flowing throughout the year and is shown as perennial on the current United States Geological Survey or more recent map provided by the Department.

The Merrimack River and the Spickett River, as defined under the Act, have an associated 25 foot RA from the MAHW boundary. The MAHW boundary on the Site for the Merrimack River is an elevation defined by the man-made concrete walls that comprise the northern and southern Bank. The elevation is not delineated in the field at this time. RA should be measured from the bank flags, where adjacent to the river. The MAHW boundary on the Site for the Spickett River is coincident with the bank boundary and therefore, RA should be measured from the bank flags, where adjacent to the river.

Jurisdictional Wetland Resource Areas – City of Lawrence
The City of Lawrence Wetlands Protection Ordinance (the Ordinance) protects additional wetland resource areas, including isolated vegetated wetlands (IVW), isolated lands subject to flooding (ILSF), and intermittent streams. The Ordinance also extends additional jurisdiction to lands within 200 feet of the bank of a river, unless determined otherwise in the regulations.

Additional resource areas only protected under the Ordinance exist on the Site, and therefore affect the jurisdictional areas on the Site. The table below describes the additional resource areas, as described in the Ordinance, documented by Nover-Armstrong.

Table 4: Additional Resource Areas & Areas Subject to Juridiction

Resource Area	Flag Series	Location	Description / Notes
IVW	WF2 Series *Flags WF2-100 to WF2-131*	Within the ROW; between Lowell Street and Haverhill Street	The IVW as be characterized as a shrub-scrub wetland. This wetland boundary was established based on evidence of hydrology, including hydric soils, and presence of hydrophytic vegetation. At the time on inspections, portions of the IVW held standing water. Remaining portions of the wetland comprised soils saturated to the surface. The IVW is generally vegetated with pussy willow (*Salix discolor*), a variety of rushes (*Juncus* spp.), broadleaf cattail, multiflora rose (*Rosa multiflora*), and goldenrod.
Riverfront Area	B4 Series	Northern Bank of Merrimack River	As determined in the Ordinance, there is a 100-foot RA off of the Merrimack River between the entranceway to the North Canal and the terminus of the North Canal at the Merrimack River Channel.

Jurisdictional Wetland Resource Areas – Federal Clean Water Act (Section 404)
The wetlands, intermittent streams, and perennial streams located on the Site are "waters of the United States," and are therefore subject to the federal Clean Water Act, 33 U.S.C. §1251 et seq (1972). The boundary to "waters of the United States" is the vegetated wetlands boundary, or, in the absence of vegetated wetlands, is the Ordinary High Water Mark (OHWM) for non-tidal rivers and streams, as specified at 33 CFR §328.4.

According to 33 CFR §328.3(c)(4), vegetated wetlands are defined as "those areas that are inundated or saturated by surface or groundwater at a frequency and duration sufficient to support, and that under normal circumstances do support, a prevalence of vegetation typically adapted for life in saturated soil conditions." The wetland boundaries previously described in this report were delineated in accordance with this definition. US Army Corps vegetated wetland boundary delineation field data sheets are attached documenting Nover-Armstrong's observations of evidence of hydrology, soils, and hydrophytic vegetation at specific data plots. The OHWM, as defined at 33 CFR §328.3(c)(6), is not delineated in the field at this time. Work conducted below the boundary of vegetated wetlands or OHWM is Subject to Jurisdiction under Section 404 of the Clean Water Act.

Jurisdictional Wetland Resource Areas – Massachusetts Clean Waters Act (Section 401)
The limit of jurisdiction under Massachusetts Clean Waters Act (Section 401), as specified in 314 CMR 9.00, is the limit of Section 404 jurisdiction under the federal Clean Water Act. Exceedances of the jurisdictional threshold under 314 CMR 9.00 require filing for a Water Quality Certification under Section 401.

Findings and Recommendations
Nover-Armstrong has identified areas Subject to Protection and/or Jurisdiction under the Massachusetts Wetlands Protection Act, the Lawrence Wetlands Protection Ordinance, the federal Clean Water Act, and the Massachusetts Clean Waters Act, on or within 100 feet of the Site and have delineated the boundaries of Bank, BVW, and IVW that exist on the Site. In order to definitely determine the extent of Conservation Commission jurisdiction, Army Corps jurisdiction, and MassDEP jurisdiction, the boundary flags would need to be located and depicted on a to-scale plan of the site.

We appreciate the opportunity to provide you with expert wetland services. If you have any questions or need further assistance, please do not hesitate to call us.

Sincerely
Nover-Armstrong Associates, Inc.

Caitlin Nover
Environmental Scientist

Marta Nover
Principal

Attachments:
Figure 1 - Site Locus
Figure 2 - Environmental Resource Map
Figure 3 - FEMA FIRMette
Photographic Documentation
USACE Bordering Vegetated Wetland Delineation Field Data Forms
Custom Soil Report for Essex County, Massachusetts, Northern Part

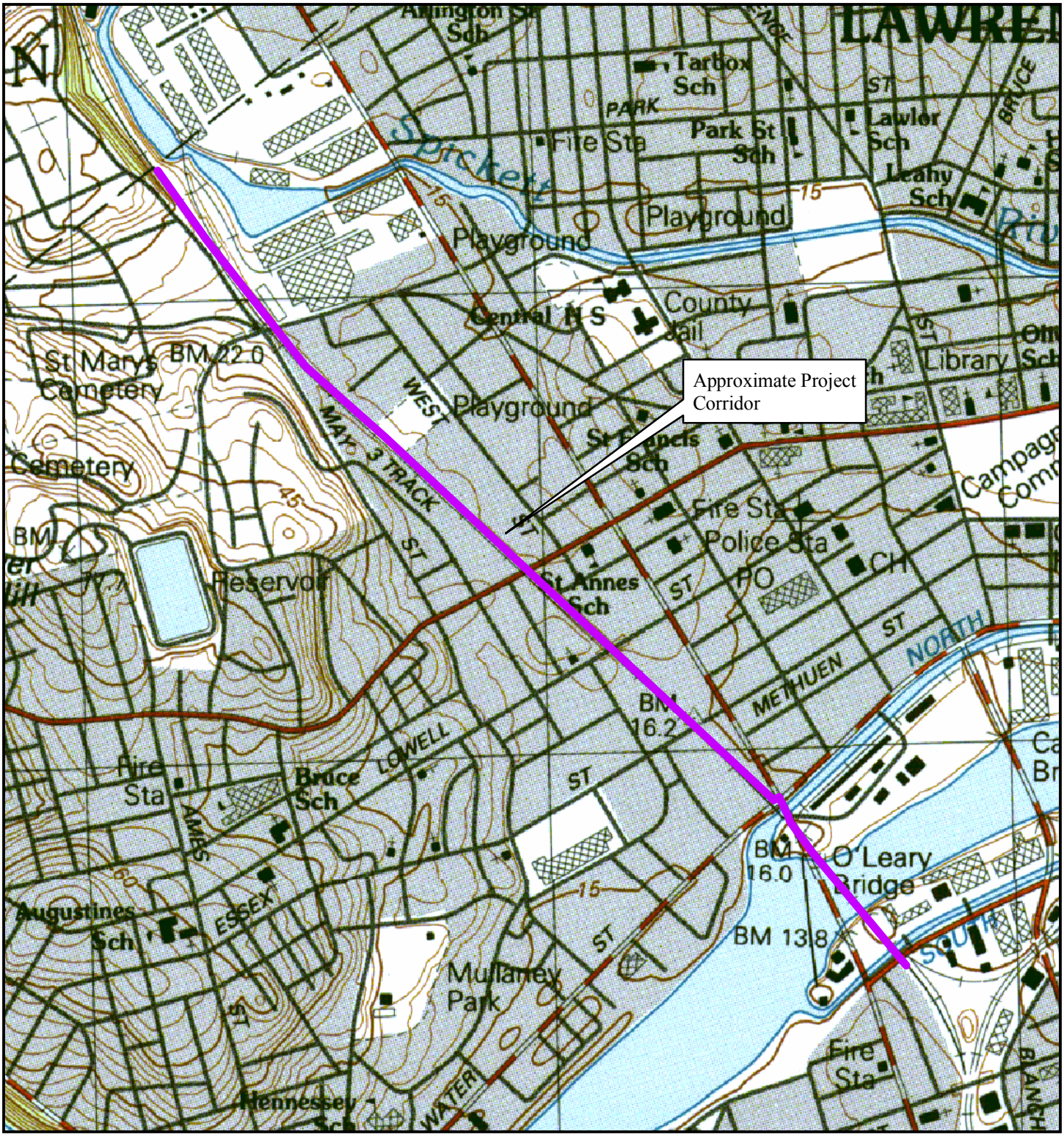

NOVER-ARMSTRONG ASSOCIATES, INC.

Figure 1
Site Locus

Legend

Project Locus

N
W E
S

0 1,000 2,000 Feet

1 inch = 1,000 feet

Data Source: MassGIS USGS Topographic Maps (2009)

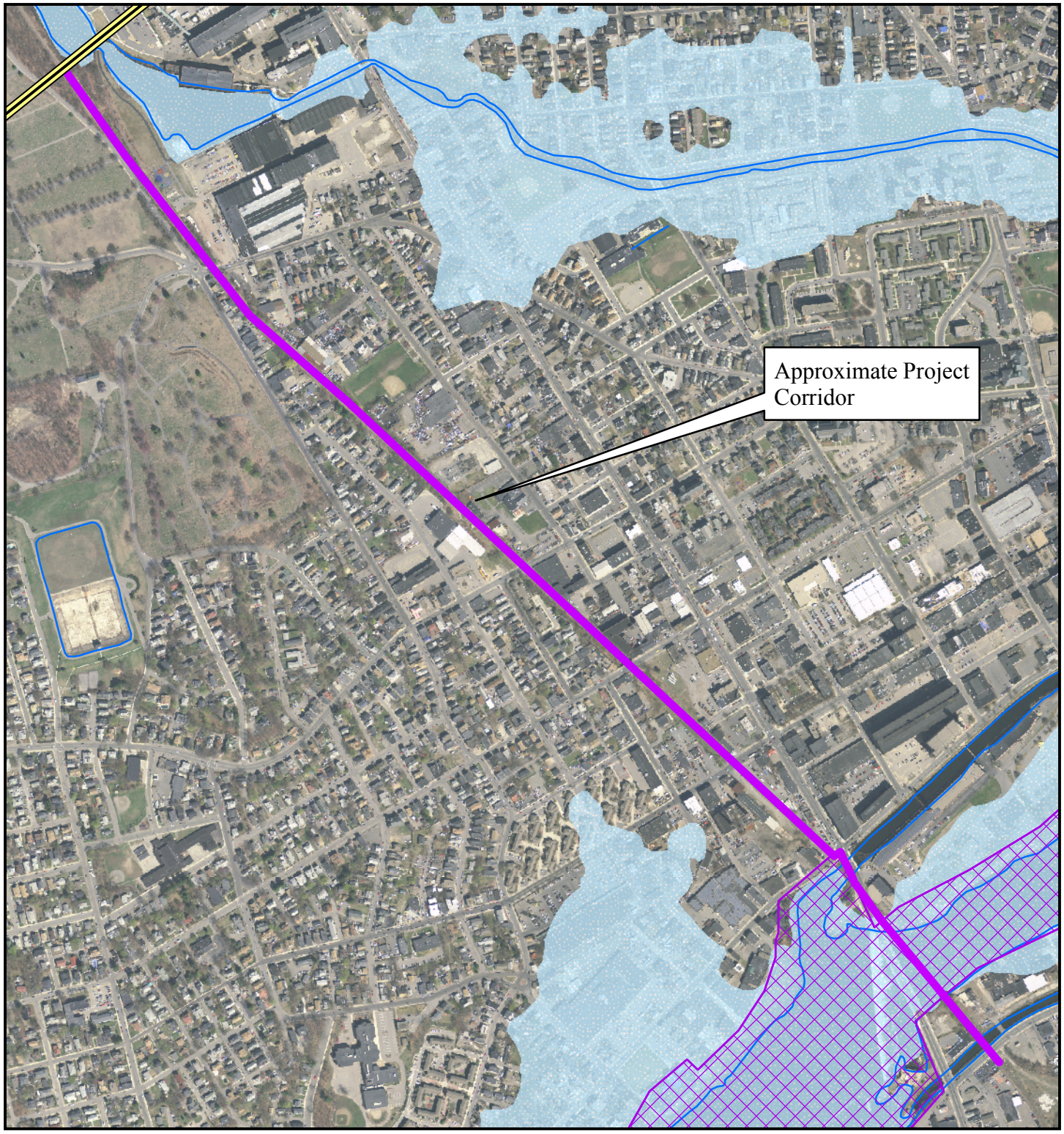

NOVER-ARMSTRONG ASSOCIATES, INC.

Figure 2
Wetland Resources

Legend

- MassDEP Hydrologic Feature
- NHESP Priority Habitat of Rare Species
- NHESP Estimated Habitats of Rare Wildlife
- NFHL 100 Year Flood Zone
- Municipal Boundary
- Project Locus

N
W E
S

0 800 1,600 Feet

1 inch = 800 feet

Data Source: MassGIS USGS Color Ortho Imagery (2014), MassDEP Wetlands (1:12000) (2009), NHESP Potential Vernal Pools (2000), NHESP Certified Vernal Pools, NHESP Priority Habitats of Rare Species (2008), NHESP Estimated Habitats of Rare Species (2008), Areas of Critical Environmental Concern (2009), FEMA National Flood Hazard Layer (2014),

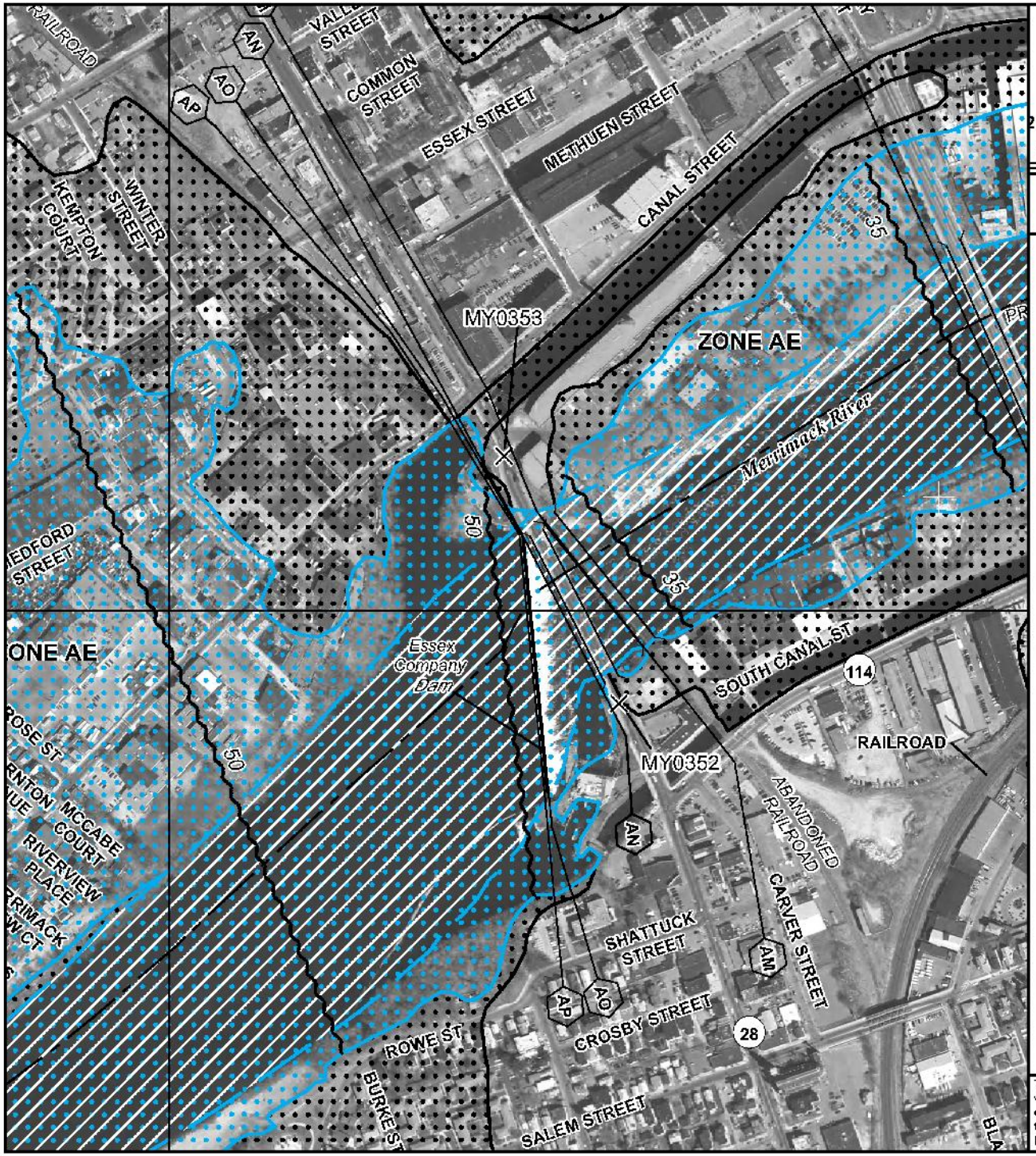

MAP SCALE 1" = 500'

250 0 500 1000

FEET

METERS

NFIP

NATIONAL FLOOD INSURANCE PROGRAM

PANEL 0208F

FIRM

FLOOD INSURANCE RATE MAP

ESSEX COUNTY, MASSACHUSETTS (ALL JURISDICTIONS)

PANEL 208 OF 600

(SEE MAP INDEX FOR FIRM PANEL LAYOUT)

CONTAINS:

COMMUNITY	NUMBER	PANEL	SUFFIX
ANDOVER, TOWN OF	250076	0208	F
LAWRENCE, CITY OF	250087	0208	F
METHUEN, CITY OF	250093	0208	F

Notice to User: The **Map Number** shown below should be used when placing map orders; the **Community Number** shown above should be used on insurance applications for the subject community.

MAP NUMBER
25009C0208F

EFFECTIVE DATE
JULY 3, 2012

Federal Emergency Management Agency

This is an official copy of a portion of the above referenced flood map. It was extracted using F-MIT On-Line. This map does not reflect changes or amendments which may have been made subsequent to the date on the title block. For the latest product information about National Flood Insurance Program flood maps check the FEMA Flood Map Store at www.msc.fema.gov

MAP SCALE 1" = 500'
0
500
1000
FEET
METERS
NFIP
PANEL 0208F
FIRM
FLOOD INSURANCE RATE MAP
ESSEX COUNTY, MASSACHUSETTS
(ALL JURISDICTIONS)
PANEL 208 OF 600
(SEE MAP INDEX FOR FIRM PANEL LAYOUT)
CONTAINS:
COMMUNITY NUMBER PANEL SUFFIX
ANDOVER, TOWN OF 250076 0208 F
LAWRENCE, CITY OF 250087 0208 F
METHUEN, CITY OF 250093 0208 F
NATIONAL FLOOD INSURANCE PROGRAM
Notice to User: The Map Number shown below should be used when placing map orders; the Community Number shown above should be used on insurance applications for the subject community.
MAP NUMBER
25009C0208F
EFFECTIVE DATE
JULY 3, 2012
Federal Emergency Management Agency
This is an official copy of a portion of the above referenced flood map. It was extracted using F-MIT On-Line. This map does not reflect changes or amendments which may have been made subsequent to the date on the title block. For the latest product information about National Flood Insurance Program flood maps check the FEMA Flood Map Store at www.msc.fema.gov
ZONE AE
PARK STREET
HOLLY STREET
DAISY STREET
LAKE ST
WASHINGTON STREET
WEST STREET
MANCHESTER ST
BLAKELIN ST
WILLOUGHBY STREET
WENDELL ST
ARCHER STREET
ACTON STREET
HUBBARD PLACE
FLORENCE STREET
HANLON COURT
RAILROAD STREET
MAY STREET
FOREST STREET
CRESCENT
HIGHGATE STREET
RESERVOIR STREET
CURRANT HILL ROAD
Spicket River
LAWRENCE
50087
CHAMPLAIN
BELLEVUE
AMES S
HILLSI
MORTON
ALDEN COURT

Photo 1

Southern and northern Banks (B1 and B2 Series) of the South Canal — facing east from Broadway Street.

Photo 2

Southern and northern Banks (B1 and B2 Series) of the South Canal — facing northeast from the southern bank.

PHOTOGRAPHIC DOCUMENTATION

Lawrence-Manchester Rail Corridor

Lawrence, Massachusetts

Photographs Documented March 10, 2017

Photo 3

Southern Bank of the Merrimack River (B3 Series) — facing east.

Photo 4

Northern Bank of the Merrimack River (B4 Series) — facing west.

PHOTOGRAPHIC DOCUMENTATION

Lawrence-Manchester Rail Corridor

Lawrence, Massachusetts

Photographs Documented March 10, 2017

Photo 5

Southern Bank (B5 Series) of the North Canal — facing southeast from Broadway Street.

Photo 6

Northern Bank (B6 Series) of the North Canal — facing northeast from Broadway Street.

PHOTOGRAPHIC DOCUMENTATION

Lawrence-Manchester Rail Corridor

Lawrence, Massachusetts

Photographs Documented March 10, 2017

Photo 7

The Banks (B5 and B6 Series) of the North Channel —
facing south from Canal Street

Photo 8

Southern Bank of the Spickett River (B7 Series) — facing north toward the Lawrence-Methuen town line.

PHOTOGRAPHIC DOCUMENTATION

Lawrence-Manchester Rail Corridor

Lawrence, Massachusetts

Photographs Documented March 10, 2017

Photo 9

Wetland Series 1 BVW — facing south.

Photo 10

Wetland Series 2 IVW — facing south.

PHOTOGRAPHIC DOCUMENTATION
Lawrence-Manchester Rail Corridor
Lawrence, Massachusetts
Photographs Documented March 10, 2017

WETLAND DETERMINATION DATA FORM – Northcentral and Northeast Region

Project/Site: Manchester-Lawrence Rail Corridor City/County: Lawrence Sampling Date: 3/10/2017

Applicant/Owner: Greenman Pedersen, Inc. State: MA Sampling Point: WF1 - UPL

Investigator(s): C. Nover Section, Township, Range: _____

Landform (hillslope, terrace, etc.): _____ Local relief (concave, convex, none): _____ Slope (%): _____

Subregion (LRR or MLRA): LRR R Lat: _____ Long: _____ Datum: _____

Soil Map Unit Name: 257E - Hinckley and Windsor soils NWI classification: _____

Are climatic / hydrologic conditions on the site typical for this time of year? Yes X No _____ (If no, explain in Remarks.)

Are Vegetation X, Soil _____, or Hydrology _____ significantly disturbed? Are "Normal Circumstances" present? Yes X No _____

Are Vegetation _____, Soil _____, or Hydrology _____ naturally problematic? (If needed, explain any answers in Remarks.)

SUMMARY OF FINDINGS – Attach site map showing sampling point locations, transects, important features, etc.

Hydrophytic Vegetation Present?	Yes _____	No X	**Is the Sampled Area within a Wetland?** Yes _____ No X
Hydric Soil Present?	Yes _____	No X	
Wetland Hydrology Present?	Yes _____	No X	If yes, optional Wetland Site ID: _____

Remarks: (Explain alternative procedures here or in a separate report.)

Plot @ WF1-100

HYDROLOGY

Wetland Hydrology Indicators:

Primary Indicators (minimum of one is required; check all that apply)

- ___ Surface Water (A1)
- ___ High Water Table (A2)
- ___ Saturation (A3)
- ___ Water Marks (B1)
- ___ Sediment Deposits (B2)
- ___ Drift Deposits (B3)
- ___ Algal Mat or Crust (B4)
- ___ Iron Deposits (B5)
- ___ Inundation Visible on Aerial Imagery (B7)
- ___ Sparsely Vegetated Concave Surface (B8)
- ___ Water-Stained Leaves (B9)
- ___ Aquatic Fauna (B13)
- ___ Marl Deposits (B15)
- ___ Hydrogen Sulfide Odor (C1)
- ___ Oxidized Rhizospheres on Living Roots (C3)
- ___ Presence of Reduced Iron (C4)
- ___ Recent Iron Reduction in Tilled Soils (C6)
- ___ Thin Muck Surface (C7)
- ___ Other (Explain in Remarks)

Secondary Indicators (minimum of two required)

- ___ Surface Soil Cracks (B6)
- ___ Drainage Patterns (B10)
- ___ Moss Trim Lines (B16)
- ___ Dry-Season Water Table (C2)
- ___ Crayfish Burrows (C8)
- ___ Saturation Visible on Aerial Imagery (C9)
- ___ Stunted or Stressed Plants (D1)
- ___ Geomorphic Position (D2)
- ___ Shallow Aquitard (D3)
- ___ Microtopographic Relief (D4)
- ___ FAC-Neutral Test (D5)

Field Observations:

Surface Water Present?	Yes _____	No X	Depth (inches): _____
Water Table Present?	Yes _____	No X	Depth (inches): _____
Saturation Present? (includes capillary fringe)	Yes _____	No X	Depth (inches): _____

Wetland Hydrology Present? Yes _____ No X

Describe Recorded Data (stream gauge, monitoring well, aerial photos, previous inspections), if available:

Remarks:

VEGETATION – Use scientific names of plants.

Sampling Point: WF1-UPL

Tree Stratum (Plot size: 30')	Absolute % Cover	Dominant Species?	Indicator Status
1. Catalpa speciosa	38.0	Y	FACU
2.			
3.			
4.			
5.			
6.			
7.			
	38.0 = Total Cover		
Sapling/Shrub Stratum (Plot size: 15')			
1. Cornus sericea	3.0	Y	FACW
2.			
3.			
4.			
5.			
6.			
7.			
	3.0 = Total Cover		
Herb Stratum (Plot size: 5')			
1. Upland grasses	83.0	Y	UPL
2. Drucus carota	3.0	N	UPL
3.			
4.			
5.			
6.			
7.			
8.			
9.			
10.			
11.			
12.			
	86.0 = Total Cover		
Woody Vine Stratum (Plot size: 30')			
1.			
2.			
3.			
4.			
	0.0 = Total Cover		

Dominance Test worksheet:

Number of Dominant Species That Are OBL, FACW, or FAC: 1 (A)

Total Number of Dominant Species Across All Strata: 3 (B)

Percent of Dominant Species That Are OBL, FACW, or FAC: 33% (A/B)

Prevalence Index worksheet:

Total % Cover of:		Multiply by:	
OBL species		x 1 =	
FACW species	1	x 2 =	2
FAC species		x 3 =	
FACU species	1	x 4 =	4
UPL species	1	x 5 =	5
Column Totals:	3 (A)		11 (B)

Prevalence Index = B/A = 3.67

Hydrophytic Vegetation Indicators:

___ 1 - Rapid Test for Hydrophytic Vegetation

___ 2 - Dominance Test is >50%

___ 3 - Prevalence Index is ≤3.0[1]

___ 4 - Morphological Adaptations[1] (Provide supporting data in Remarks or on a separate sheet)

___ Problematic Hydrophytic Vegetation[1] (Explain)

[1]Indicators of hydric soil and wetland hydrology must be present, unless disturbed or problematic.

Definitions of Vegetation Strata:

Tree – Woody plants 3 in. (7.6 cm) or more in diameter at breast height (DBH), regardless of height.

Sapling/shrub – Woody plants less than 3 in. DBH and greater than or equal to 3.28 ft (1 m) tall.

Herb – All herbaceous (non-woody) plants, regardless of size, and woody plants less than 3.28 ft tall.

Woody vines – All woody vines greater than 3.28 ft in height.

Hydrophytic Vegetation Present? Yes ____ No X

Remarks: (Include photo numbers here or on a separate sheet.)

The upland area is significantly altered. The area comprises maintained / landscaped lawn areas.

SOIL

Sampling Point: WF1-UPL

Profile Description: (Describe to the depth needed to document the indicator or confirm the absence of indicators.)

Depth (inches)	Matrix Color (moist)	%	Redox Features Color (moist)	%	Type[1]	Loc[2]	Texture	Remarks
0-6	10YR 3/2	100					FS	
6-13	2.5Y 4/3	100					FS	
								Refusal @ 13"

[1]Type: C=Concentration, D=Depletion, RM=Reduced Matrix, MS=Masked Sand Grains. [2]Location: PL=Pore Lining, M=Matrix.

Hydric Soil Indicators:

- ___ Histosol (A1)
- ___ Histic Epipedon (A2)
- ___ Black Histic (A3)
- ___ Hydrogen Sulfide (A4)
- ___ Stratified Layers (A5)
- ___ Depleted Below Dark Surface (A11)
- ___ Thick Dark Surface (A12)
- ___ Sandy Mucky Mineral (S1)
- ___ Sandy Gleyed Matrix (S4)
- ___ Sandy Redox (S5)
- ___ Stripped Matrix (S6)
- ___ Dark Surface (S7) **(LRR R, MLRA 149B)**
- ___ Polyvalue Below Surface (S8) **(LRR R, MLRA 149B)**
- ___ Thin Dark Surface (S9) **(LRR R, MLRA 149B)**
- ___ Loamy Mucky Mineral (F1) **(LRR K, L)**
- ___ Loamy Gleyed Matrix (F2)
- ___ Depleted Matrix (F3)
- ___ Redox Dark Surface (F6)
- ___ Depleted Dark Surface (F7)
- ___ Redox Depressions (F8)

Indicators for Problematic Hydric Soils[3]:

- ___ 2 cm Muck (A10) **(LRR K, L, MLRA 149B)**
- ___ Coast Prairie Redox (A16) **(LRR K, L, R)**
- ___ 5 cm Mucky Peat or Peat (S3) **(LRR K, L, R)**
- ___ Dark Surface (S7) **(LRR K, L)**
- ___ Polyvalue Below Surface (S8) **(LRR K, L)**
- ___ Thin Dark Surface (S9) **(LRR K, L)**
- ___ Iron-Manganese Masses (F12) **(LRR K, L, R)**
- ___ Piedmont Floodplain Soils (F19) **(MLRA 149B)**
- ___ Mesic Spodic (TA6) **(MLRA 144A, 145, 149B)**
- ___ Red Parent Material (F21)
- ___ Very Shallow Dark Surface (TF12)
- ___ Other (Explain in Remarks)

[3]Indicators of hydrophytic vegetation and wetland hydrology must be present, unless disturbed or problematic.

Restrictive Layer (if observed):

Type: _____

Depth (inches): _____

Hydric Soil Present? **Yes** _____ **No** X

Remarks:

WETLAND DETERMINATION DATA FORM – Northcentral and Northeast Region

Project/Site: Manchester-Lawrence Rail Corridor City/County: Lawrence Sampling Date: 3/10/2017

Applicant/Owner: Greenman Pedersen, Inc. State: MA Sampling Point: WF1 - WET

Investigator(s): C. Nover Section, Township, Range: _____

Landform (hillslope, terrace, etc.): _____ Local relief (concave, convex, none): _____ Slope (%): _____

Subregion (LRR or MLRA): LRR R Lat: _____ Long: _____ Datum: _____

Soil Map Unit Name: 257E - Hinckley and Windsor soils NWI classification: Freshwater Pond

Are climatic / hydrologic conditions on the site typical for this time of year? Yes X No _____ (If no, explain in Remarks.)

Are Vegetation _____, Soil _____, or Hydrology _____ significantly disturbed? Are "Normal Circumstances" present? Yes X No _____

Are Vegetation _____, Soil X, or Hydrology _____ naturally problematic? (If needed, explain any answers in Remarks.)

SUMMARY OF FINDINGS – Attach site map showing sampling point locations, transects, important features, etc.

Hydrophytic Vegetation Present?	Yes X	No _____	**Is the Sampled Area within a Wetland?** Yes X No _____
Hydric Soil Present?	Yes X	No _____	If yes, optional Wetland Site ID: _____
Wetland Hydrology Present?	Yes X	No _____	

Remarks: (Explain alternative procedures here or in a separate report.)

Plot @ WF1-100

HYDROLOGY

Wetland Hydrology Indicators:

Primary Indicators (minimum of one is required; check all that apply)

- ___ Surface Water (A1)
- X High Water Table (A2)
- X Saturation (A3)
- ___ Water Marks (B1)
- ___ Sediment Deposits (B2)
- ___ Drift Deposits (B3)
- ___ Algal Mat or Crust (B4)
- X Iron Deposits (B5)
- X Inundation Visible on Aerial Imagery (B7)
- ___ Sparsely Vegetated Concave Surface (B8)
- ___ Water-Stained Leaves (B9)
- ___ Aquatic Fauna (B13)
- ___ Marl Deposits (B15)
- ___ Hydrogen Sulfide Odor (C1)
- ___ Oxidized Rhizospheres on Living Roots (C3)
- ___ Presence of Reduced Iron (C4)
- ___ Recent Iron Reduction in Tilled Soils (C6)
- ___ Thin Muck Surface (C7)
- ___ Other (Explain in Remarks)

Secondary Indicators (minimum of two required)

- ___ Surface Soil Cracks (B6)
- ___ Drainage Patterns (B10)
- ___ Moss Trim Lines (B16)
- ___ Dry-Season Water Table (C2)
- ___ Crayfish Burrows (C8)
- X Saturation Visible on Aerial Imagery (C9)
- ___ Stunted or Stressed Plants (D1)
- X Geomorphic Position (D2)
- ___ Shallow Aquitard (D3)
- ___ Microtopographic Relief (D4)
- ___ FAC-Neutral Test (D5)

Field Observations:

Surface Water Present?	Yes _____	No _____	Depth (inches): _____
Water Table Present?	Yes X	No _____	Depth (inches): @ surface
Saturation Present? (includes capillary fringe)	Yes X	No _____	Depth (inches): @ surface

Wetland Hydrology Present? Yes X No _____

Describe Recorded Data (stream gauge, monitoring well, aerial photos, previous inspections), if available:

Remarks:

VEGETATION – Use scientific names of plants.

Sampling Point: WF1-WET

Tree Stratum (Plot size: 30')	Absolute % Cover	Dominant Species?	Indicator Status
1. Catalpa speciosa	20.5	Y	FACU
2.			
3.			
4.			
5.			
6.			
7.			
	20.5 = Total Cover		
Sapling/Shrub Stratum (Plot size: 15')			
1. Cornus sericea	20.5	Y	FACW
2.			
3.			
4.			
5.			
6.			
7.			
	20.5 = Total Cover		
Herb Stratum (Plot size: 5')			
1. Phragmites australis	85.5	Y	FACW
2. Typha latifolia	3.0	N	OBL
3.			
4.			
5.			
6.			
7.			
8.			
9.			
10.			
11.			
12.			
	88.5 = Total Cover		
Woody Vine Stratum (Plot size: 30')			
1.			
2.			
3.			
4.			
	0.0 = Total Cover		

Dominance Test worksheet:

Number of Dominant Species That Are OBL, FACW, or FAC: 2 (A)

Total Number of Dominant Species Across All Strata: 3 (B)

Percent of Dominant Species That Are OBL, FACW, or FAC: 67% (A/B)

Prevalence Index worksheet:

Total % Cover of:		Multiply by:	
OBL species		x 1 =	
FACW species	2	x 2 =	4
FAC species		x 3 =	
FACU species	1	x 4 =	4
UPL species		x 5 =	
Column Totals:	3 (A)		8 (B)

Prevalence Index = B/A = 2.67

Hydrophytic Vegetation Indicators:

- ___ 1 - Rapid Test for Hydrophytic Vegetation
- X 2 - Dominance Test is >50%
- X 3 - Prevalence Index is ≤3.0[1]
- ___ 4 - Morphological Adaptations[1] (Provide supporting data in Remarks or on a separate sheet)
- ___ Problematic Hydrophytic Vegetation[1] (Explain)

[1]Indicators of hydric soil and wetland hydrology must be present, unless disturbed or problematic.

Definitions of Vegetation Strata:

Tree – Woody plants 3 in. (7.6 cm) or more in diameter at breast height (DBH), regardless of height.

Sapling/shrub – Woody plants less than 3 in. DBH and greater than or equal to 3.28 ft (1 m) tall.

Herb – All herbaceous (non-woody) plants, regardless of size, and woody plants less than 3.28 ft tall.

Woody vines – All woody vines greater than 3.28 ft in height.

Hydrophytic Vegetation Present? Yes X No ___

Remarks: (Include photo numbers here or on a separate sheet.)

The upland area is significantly altered. The area comprises maintained / landscaped lawn areas.

SOIL Sampling Point: WF1-WET

Profile Description: (Describe to the depth needed to document the indicator or confirm the absence of indicators.)

Depth (inches)	Matrix Color (moist)	Matrix %	Redox Features Color (moist)	Redox Features %	Redox Features Type[1]	Redox Features Loc[2]	Texture	Remarks
0-3	2.5Y 2.5/1	100					Muck	25% OM, saturated
3-3.5	5YR 5/8	100					FSL	Saturated
3.5-5	10 YR 4/2	100			MS		FSL	Saturated
5-12"+	10YR 2/1	100			MS		FSL	Saturated

[1]Type: C=Concentration, D=Depletion, RM=Reduced Matrix, MS=Masked Sand Grains. [2]Location: PL=Pore Lining, M=Matrix.

Hydric Soil Indicators:

- ___ Histosol (A1)
- ___ Histic Epipedon (A2)
- ___ Black Histic (A3)
- ___ Hydrogen Sulfide (A4)
- ___ Stratified Layers (A5)
- ___ Depleted Below Dark Surface (A11)
- ___ Thick Dark Surface (A12)
- ___ Sandy Mucky Mineral (S1)
- ___ Sandy Gleyed Matrix (S4)
- ___ Sandy Redox (S5)
- ___ Stripped Matrix (S6)
- X Dark Surface (S7) **(LRR R, MLRA 149B)**
- ___ Polyvalue Below Surface (S8) **(LRR R, MLRA 149B)**
- ___ Thin Dark Surface (S9) **(LRR R, MLRA 149B)**
- ___ Loamy Mucky Mineral (F1) **(LRR K, L)**
- ___ Loamy Gleyed Matrix (F2)
- ___ Depleted Matrix (F3)
- ___ Redox Dark Surface (F6)
- ___ Depleted Dark Surface (F7)
- ___ Redox Depressions (F8)

Indicators for Problematic Hydric Soils[3]:

- ___ 2 cm Muck (A10) **(LRR K, L, MLRA 149B)**
- ___ Coast Prairie Redox (A16) **(LRR K, L, R)**
- ___ 5 cm Mucky Peat or Peat (S3) **(LRR K, L, R)**
- ___ Dark Surface (S7) **(LRR K, L)**
- ___ Polyvalue Below Surface (S8) **(LRR K, L)**
- ___ Thin Dark Surface (S9) **(LRR K, L)**
- ___ Iron-Manganese Masses (F12) **(LRR K, L, R)**
- ___ Piedmont Floodplain Soils (F19) **(MLRA 149B)**
- ___ Mesic Spodic (TA6) **(MLRA 144A, 145, 149B)**
- ___ Red Parent Material (F21)
- X Very Shallow Dark Surface (TF12)
- ___ Other (Explain in Remarks)

[3]Indicators of hydrophytic vegetation and wetland hydrology must be present, unless disturbed or problematic.

Restrictive Layer (if observed):

Type: _____

Depth (inches): _____

Hydric Soil Present? Yes X No ____

Remarks:

WETLAND DETERMINATION DATA FORM – Northcentral and Northeast Region

Project/Site: Manchester-Lawrence Rail Corridor City/County: Lawrence Sampling Date: 3/10/2017

Applicant/Owner: Greenman Pedersen, Inc. State: MA Sampling Point: WF2 - UPL

Investigator(s): C. Nover Section, Township, Range: _____

Landform (hillslope, terrace, etc.): _____ Local relief (concave, convex, none): _____ Slope (%): _____

Subregion (LRR or MLRA): LRR R Lat: _____ Long: _____ Datum: _____

Soil Map Unit Name: 257E - Hinckley and Windsor soils NWI classification: _____

Are climatic / hydrologic conditions on the site typical for this time of year? Yes X No _____ (If no, explain in Remarks.)

Are Vegetation _____, Soil X, or Hydrology _____ significantly disturbed? Are "Normal Circumstances" present? Yes X No _____

Are Vegetation _____, Soil _____, or Hydrology _____ naturally problematic? (If needed, explain any answers in Remarks.)

SUMMARY OF FINDINGS – Attach site map showing sampling point locations, transects, important features, etc.

Hydrophytic Vegetation Present?	Yes _____	No X	**Is the Sampled Area within a Wetland?** Yes _____ No X
Hydric Soil Present?	Yes _____	No X	
Wetland Hydrology Present?	Yes _____	No X	If yes, optional Wetland Site ID: _____

Remarks: (Explain alternative procedures here or in a separate report.)

Plot @ WF2-122

HYDROLOGY

Wetland Hydrology Indicators:

Primary Indicators (minimum of one is required; check all that apply)

- ___ Surface Water (A1)
- ___ High Water Table (A2)
- ___ Saturation (A3)
- ___ Water Marks (B1)
- ___ Sediment Deposits (B2)
- ___ Drift Deposits (B3)
- ___ Algal Mat or Crust (B4)
- ___ Iron Deposits (B5)
- ___ Inundation Visible on Aerial Imagery (B7)
- ___ Sparsely Vegetated Concave Surface (B8)
- ___ Water-Stained Leaves (B9)
- ___ Aquatic Fauna (B13)
- ___ Marl Deposits (B15)
- ___ Hydrogen Sulfide Odor (C1)
- ___ Oxidized Rhizospheres on Living Roots (C3)
- ___ Presence of Reduced Iron (C4)
- ___ Recent Iron Reduction in Tilled Soils (C6)
- ___ Thin Muck Surface (C7)
- ___ Other (Explain in Remarks)

Secondary Indicators (minimum of two required)

- ___ Surface Soil Cracks (B6)
- ___ Drainage Patterns (B10)
- ___ Moss Trim Lines (B16)
- ___ Dry-Season Water Table (C2)
- ___ Crayfish Burrows (C8)
- ___ Saturation Visible on Aerial Imagery (C9)
- ___ Stunted or Stressed Plants (D1)
- ___ Geomorphic Position (D2)
- ___ Shallow Aquitard (D3)
- ___ Microtopographic Relief (D4)
- ___ FAC-Neutral Test (D5)

Field Observations:

Surface Water Present?	Yes _____	No X	Depth (inches): _____
Water Table Present?	Yes _____	No X	Depth (inches): _____
Saturation Present? (includes capillary fringe)	Yes _____	No X	Depth (inches): _____

Wetland Hydrology Present? Yes _____ No X

Describe Recorded Data (stream gauge, monitoring well, aerial photos, previous inspections), if available:

Remarks:

VEGETATION – Use scientific names of plants.

Sampling Point: WF2-UPL

Tree Stratum (Plot size: 30')	Absolute % Cover	Dominant Species?	Indicator Status
1. Acer saccharinum	38.0	Y	FACW
2. Quercus velutina	20.5	Y	UPL
3.			
4.			
5.			
6.			
7.			
	58.5	= Total Cover	
Sapling/Shrub Stratum (Plot size: 15')			
1. Polygonum cuspidatum	63.0	Y	FACU
2. Rosa multiflora	37.0	Y	FACU
3.			
4.			
5.			
6.			
7.			
	100.0	= Total Cover	
Herb Stratum (Plot size: 5')			
1. Upland grasses	30.5	Y	UPL
2.			
3.			
4.			
5.			
6.			
7.			
8.			
9.			
10.			
11.			
12.			
	0.0	= Total Cover	
Woody Vine Stratum (Plot size: 30')			
1.			
2.			
3.			
4.			
	0.0	= Total Cover	

Dominance Test worksheet:

Number of Dominant Species That Are OBL, FACW, or FAC: 1 (A)

Total Number of Dominant Species Across All Strata: 5 (B)

Percent of Dominant Species That Are OBL, FACW, or FAC: 20% (A/B)

Prevalence Index worksheet:

Total % Cover of:		Multiply by:	
OBL species		x 1 =	
FACW species	1	x 2 =	2
FAC species		x 3 =	
FACU species	2	x 4 =	8
UPL species	2	x 5 =	10
Column Totals:	5 (A)		20 (B)

Prevalence Index = B/A = 4.0

Hydrophytic Vegetation Indicators:

___ 1 - Rapid Test for Hydrophytic Vegetation

___ 2 - Dominance Test is >50%

___ 3 - Prevalence Index is ≤3.0[1]

___ 4 - Morphological Adaptations[1] (Provide supporting data in Remarks or on a separate sheet)

___ Problematic Hydrophytic Vegetation[1] (Explain)

[1]Indicators of hydric soil and wetland hydrology must be present, unless disturbed or problematic.

Definitions of Vegetation Strata:

Tree – Woody plants 3 in. (7.6 cm) or more in diameter at breast height (DBH), regardless of height.

Sapling/shrub – Woody plants less than 3 in. DBH and greater than or equal to 3.28 ft (1 m) tall.

Herb – All herbaceous (non-woody) plants, regardless of size, and woody plants less than 3.28 ft tall.

Woody vines – All woody vines greater than 3.28 ft in height.

Hydrophytic Vegetation Present? Yes ____ No X

Remarks: (Include photo numbers here or on a separate sheet.)

SOIL Sampling Point: WF2-UPL

Profile Description: (Describe to the depth needed to document the indicator or confirm the absence of indicators.)

Depth (inches)	Matrix Color (moist)	%	Redox Features Color (moist)	%	Type[1]	Loc[2]	Texture	Remarks
0-8								Fill material - urban / construction debris
								Refusal @ 8"

[1]Type: C=Concentration, D=Depletion, RM=Reduced Matrix, MS=Masked Sand Grains. [2]Location: PL=Pore Lining, M=Matrix.

Hydric Soil Indicators:

- ___ Histosol (A1)
- ___ Histic Epipedon (A2)
- ___ Black Histic (A3)
- ___ Hydrogen Sulfide (A4)
- ___ Stratified Layers (A5)
- ___ Depleted Below Dark Surface (A11)
- ___ Thick Dark Surface (A12)
- ___ Sandy Mucky Mineral (S1)
- ___ Sandy Gleyed Matrix (S4)
- ___ Sandy Redox (S5)
- ___ Stripped Matrix (S6)
- ___ Dark Surface (S7) **(LRR R, MLRA 149B)**
- ___ Polyvalue Below Surface (S8) **(LRR R, MLRA 149B)**
- ___ Thin Dark Surface (S9) **(LRR R, MLRA 149B)**
- ___ Loamy Mucky Mineral (F1) **(LRR K, L)**
- ___ Loamy Gleyed Matrix (F2)
- ___ Depleted Matrix (F3)
- ___ Redox Dark Surface (F6)
- ___ Depleted Dark Surface (F7)
- ___ Redox Depressions (F8)

Indicators for Problematic Hydric Soils[3]:

- ___ 2 cm Muck (A10) **(LRR K, L, MLRA 149B)**
- ___ Coast Prairie Redox (A16) **(LRR K, L, R)**
- ___ 5 cm Mucky Peat or Peat (S3) **(LRR K, L, R)**
- ___ Dark Surface (S7) **(LRR K, L)**
- ___ Polyvalue Below Surface (S8) **(LRR K, L)**
- ___ Thin Dark Surface (S9) **(LRR K, L)**
- ___ Iron-Manganese Masses (F12) **(LRR K, L, R)**
- ___ Piedmont Floodplain Soils (F19) **(MLRA 149B)**
- ___ Mesic Spodic (TA6) **(MLRA 144A, 145, 149B)**
- ___ Red Parent Material (F21)
- ___ Very Shallow Dark Surface (TF12)
- ___ Other (Explain in Remarks)

[3]Indicators of hydrophytic vegetation and wetland hydrology must be present, unless disturbed or problematic.

Restrictive Layer (if observed):

Type: _____

Depth (inches): _____

Hydric Soil Present? Yes _____ No X

Remarks:

Soil in the area comprised fill material that included various urban / construction debris.

WETLAND DETERMINATION DATA FORM – Northcentral and Northeast Region

Project/Site: Manchester-Lawrence Rail Corridor City/County: Lawrence Sampling Date: 3/10/2017

Applicant/Owner: Greenman Pedersen, Inc. State: MA Sampling Point: WF2 - WET

Investigator(s): C. Nover Section, Township, Range: _____

Landform (hillslope, terrace, etc.): _____ Local relief (concave, convex, none): _____ Slope (%): _____

Subregion (LRR or MLRA): LRR R Lat: _____ Long: _____ Datum: _____

Soil Map Unit Name: 257E - Hinckley and Windsor soils NWI classification: _____

Are climatic / hydrologic conditions on the site typical for this time of year? Yes X No _____ (If no, explain in Remarks.)

Are Vegetation _____, Soil _____, or Hydrology _____ significantly disturbed? Are "Normal Circumstances" present? Yes X No _____

Are Vegetation _____, Soil X, or Hydrology _____ naturally problematic? (If needed, explain any answers in Remarks.)

SUMMARY OF FINDINGS – Attach site map showing sampling point locations, transects, important features, etc.

Hydrophytic Vegetation Present?	Yes X	No _____	**Is the Sampled Area within a Wetland?** Yes X No _____
Hydric Soil Present?	Yes X	No _____	If yes, optional Wetland Site ID: _____
Wetland Hydrology Present?	Yes X	No _____	

Remarks: (Explain alternative procedures here or in a separate report.)

Plot @ WF2-122

HYDROLOGY

Wetland Hydrology Indicators:

Primary Indicators (minimum of one is required; check all that apply)

- X Surface Water (A1)
- X High Water Table (A2)
- X Saturation (A3)
- ___ Water Marks (B1)
- ___ Sediment Deposits (B2)
- ___ Drift Deposits (B3)
- ___ Algal Mat or Crust (B4)
- ___ Iron Deposits (B5)
- ___ Inundation Visible on Aerial Imagery (B7)
- ___ Sparsely Vegetated Concave Surface (B8)
- ___ Water-Stained Leaves (B9)
- ___ Aquatic Fauna (B13)
- ___ Marl Deposits (B15)
- ___ Hydrogen Sulfide Odor (C1)
- ___ Oxidized Rhizospheres on Living Roots (C3)
- ___ Presence of Reduced Iron (C4)
- ___ Recent Iron Reduction in Tilled Soils (C6)
- ___ Thin Muck Surface (C7)
- ___ Other (Explain in Remarks)

Secondary Indicators (minimum of two required)

- ___ Surface Soil Cracks (B6)
- ___ Drainage Patterns (B10)
- ___ Moss Trim Lines (B16)
- ___ Dry-Season Water Table (C2)
- ___ Crayfish Burrows (C8)
- X Saturation Visible on Aerial Imagery (C9)
- ___ Stunted or Stressed Plants (D1)
- ___ Geomorphic Position (D2)
- ___ Shallow Aquitard (D3)
- X Microtopographic Relief (D4)
- ___ FAC-Neutral Test (D5)

Field Observations:

Surface Water Present?	Yes X	No _____	Depth (inches): 3"
Water Table Present?	Yes X	No _____	Depth (inches): @ surface
Saturation Present? (includes capillary fringe)	Yes X	No _____	Depth (inches): @ surface

Wetland Hydrology Present? Yes X No _____

Describe Recorded Data (stream gauge, monitoring well, aerial photos, previous inspections), if available:

Remarks:

VEGETATION – Use scientific names of plants. Sampling Point: WF2-WET

Tree Stratum (Plot size: 30')	Absolute % Cover	Dominant Species?	Indicator Status
1.			
2.			
3.			
4.			
5.			
6.			
7.			
	0.0 = Total Cover		
Sapling/Shrub Stratum (Plot size: 15')			
1. Salix discolor	38.0	Y	FACW
2. Rosa multiflora	3.0	N	FACU
3.			
4.			
5.			
6.			
7.			
	41.0 = Total Cover		
Herb Stratum (Plot size: 5')			
1. Juncus effusus	85.5	Y	OBL
2. Typha latifolia	20.5	Y	OBL
3. Echinochloa crus-galli	16.5	N	FAC
4.			
5.			
6.			
7.			
8.			
9.			
10.			
11.			
12.			
	122.5 = Total Cover		
Woody Vine Stratum (Plot size: 30')			
1.			
2.			
3.			
4.			
	0.0 = Total Cover		

Dominance Test worksheet:

Number of Dominant Species That Are OBL, FACW, or FAC: 3 (A)

Total Number of Dominant Species Across All Strata: 3 (B)

Percent of Dominant Species That Are OBL, FACW, or FAC: 100% (A/B)

Prevalence Index worksheet:

Total % Cover of:		Multiply by:	
OBL species	2	x 1 =	1
FACW species	1	x 2 =	2
FAC species	1	x 3 =	3
FACU species	1	x 4 =	4
UPL species		x 5 =	
Column Totals:	6 (A)		10 (B)

Prevalence Index = B/A = 1.67

Hydrophytic Vegetation Indicators:

- X 1 - Rapid Test for Hydrophytic Vegetation
- X 2 - Dominance Test is >50%
- X 3 - Prevalence Index is ≤3.0[1]
- ___ 4 - Morphological Adaptations[1] (Provide supporting data in Remarks or on a separate sheet)
- ___ Problematic Hydrophytic Vegetation[1] (Explain)

[1]Indicators of hydric soil and wetland hydrology must be present, unless disturbed or problematic.

Definitions of Vegetation Strata:

Tree – Woody plants 3 in. (7.6 cm) or more in diameter at breast height (DBH), regardless of height.

Sapling/shrub – Woody plants less than 3 in. DBH and greater than or equal to 3.28 ft (1 m) tall.

Herb – All herbaceous (non-woody) plants, regardless of size, and woody plants less than 3.28 ft tall.

Woody vines – All woody vines greater than 3.28 ft in height.

Hydrophytic Vegetation Present? Yes X No ___

Remarks: (Include photo numbers here or on a separate sheet.)

The upland area is significantly altered. The area comprises maintained / landscaped lawn areas.

SOIL

Sampling Point: WF2-WET

Profile Description: (Describe to the depth needed to document the indicator or confirm the absence of indicators.)

Depth (inches)	Matrix Color (moist)	Matrix %	Redox Features Color (moist)	Redox Features %	Redox Features Type[1]	Redox Features Loc[2]	Texture	Remarks
0-12"+	10YR 2/2	100					Muck	Mucky mineral

[1]Type: C=Concentration, D=Depletion, RM=Reduced Matrix, MS=Masked Sand Grains. [2]Location: PL=Pore Lining, M=Matrix.

Hydric Soil Indicators:

- ___ Histosol (A1)
- ___ Histic Epipedon (A2)
- ___ Black Histic (A3)
- ___ Hydrogen Sulfide (A4)
- ___ Stratified Layers (A5)
- ___ Depleted Below Dark Surface (A11)
- ___ Thick Dark Surface (A12)
- X Sandy Mucky Mineral (S1)
- ___ Sandy Gleyed Matrix (S4)
- ___ Sandy Redox (S5)
- ___ Stripped Matrix (S6)
- ___ Dark Surface (S7) **(LRR R, MLRA 149B)**
- ___ Polyvalue Below Surface (S8) **(LRR R, MLRA 149B)**
- ___ Thin Dark Surface (S9) **(LRR R, MLRA 149B)**
- ___ Loamy Mucky Mineral (F1) **(LRR K, L)**
- ___ Loamy Gleyed Matrix (F2)
- ___ Depleted Matrix (F3)
- ___ Redox Dark Surface (F6)
- ___ Depleted Dark Surface (F7)
- ___ Redox Depressions (F8)

Indicators for Problematic Hydric Soils[3]:

- ___ 2 cm Muck (A10) **(LRR K, L, MLRA 149B)**
- ___ Coast Prairie Redox (A16) **(LRR K, L, R)**
- ___ 5 cm Mucky Peat or Peat (S3) **(LRR K, L, R)**
- ___ Dark Surface (S7) **(LRR K, L)**
- ___ Polyvalue Below Surface (S8) **(LRR K, L)**
- ___ Thin Dark Surface (S9) **(LRR K, L)**
- ___ Iron-Manganese Masses (F12) **(LRR K, L, R)**
- ___ Piedmont Floodplain Soils (F19) **(MLRA 149B)**
- ___ Mesic Spodic (TA6) **(MLRA 144A, 145, 149B)**
- ___ Red Parent Material (F21)
- X Very Shallow Dark Surface (TF12)
- ___ Other (Explain in Remarks)

[3]Indicators of hydrophytic vegetation and wetland hydrology must be present, unless disturbed or problematic.

Restrictive Layer (if observed):

Type: _____

Depth (inches): _____

Hydric Soil Present? Yes X No _____

Remarks:

United States Department of Agriculture

NRCS

Natural Resources Conservation Service

A product of the National Cooperative Soil Survey, a joint effort of the United States Department of Agriculture and other Federal agencies, State agencies including the Agricultural Experiment Stations, and local participants

Custom Soil Resource Report for Essex County, Massachusetts, Northern Part

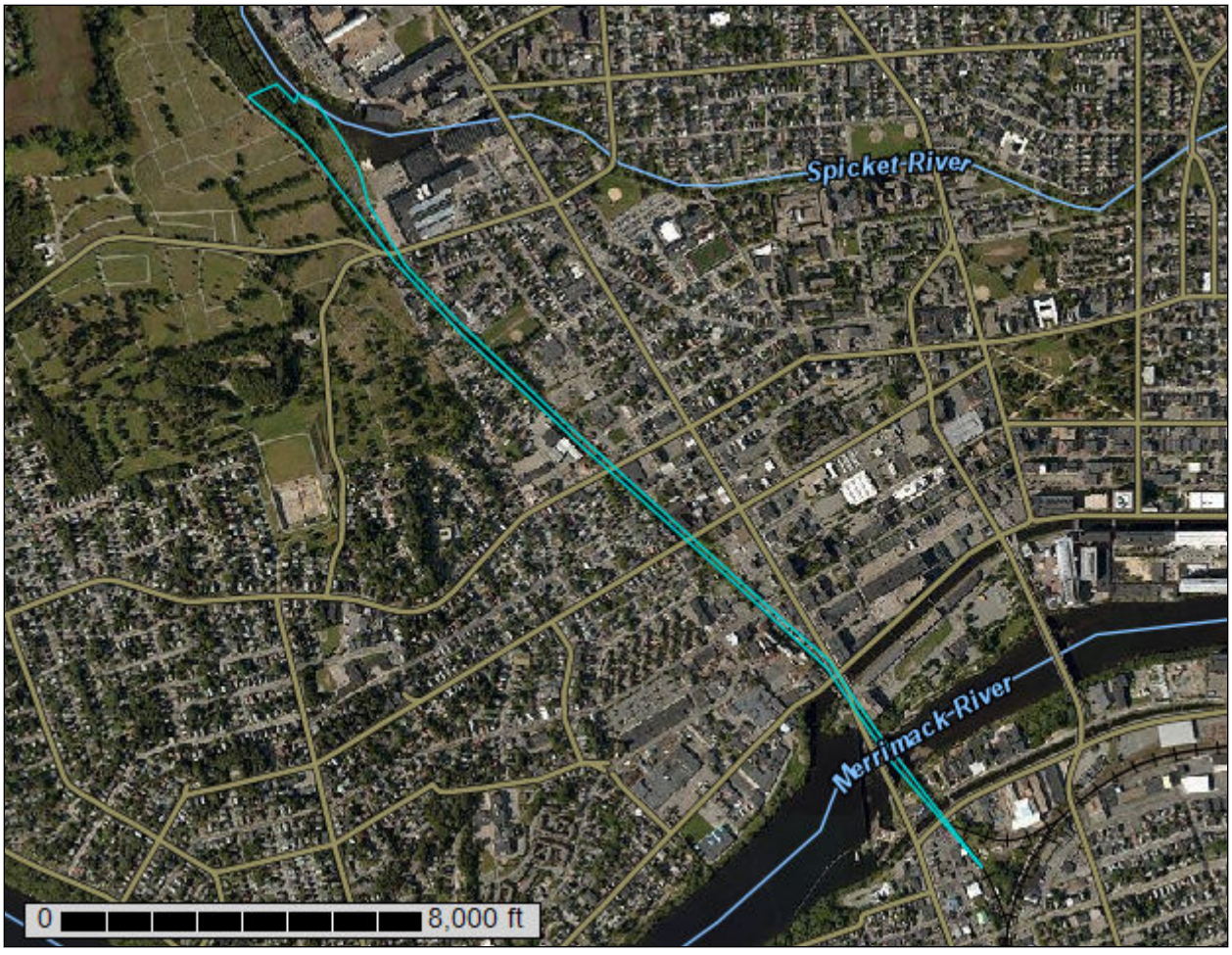

March 9, 2017

Preface

Soil surveys contain information that affects land use planning in survey areas. They highlight soil limitations that affect various land uses and provide information about the properties of the soils in the survey areas. Soil surveys are designed for many different users, including farmers, ranchers, foresters, agronomists, urban planners, community officials, engineers, developers, builders, and home buyers. Also, conservationists, teachers, students, and specialists in recreation, waste disposal, and pollution control can use the surveys to help them understand, protect, or enhance the environment.

Various land use regulations of Federal, State, and local governments may impose special restrictions on land use or land treatment. Soil surveys identify soil properties that are used in making various land use or land treatment decisions. The information is intended to help the land users identify and reduce the effects of soil limitations on various land uses. The landowner or user is responsible for identifying and complying with existing laws and regulations.

Although soil survey information can be used for general farm, local, and wider area planning, onsite investigation is needed to supplement this information in some cases. Examples include soil quality assessments (http://www.nrcs.usda.gov/wps/portal/nrcs/main/soils/health/) and certain conservation and engineering applications. For more detailed information, contact your local USDA Service Center (https://offices.sc.egov.usda.gov/locator/app?agency=nrcs) or your NRCS State Soil Scientist (http://www.nrcs.usda.gov/wps/portal/nrcs/detail/soils/contactus/?cid=nrcs142p2_053951).

Great differences in soil properties can occur within short distances. Some soils are seasonally wet or subject to flooding. Some are too unstable to be used as a foundation for buildings or roads. Clayey or wet soils are poorly suited to use as septic tank absorption fields. A high water table makes a soil poorly suited to basements or underground installations.

The National Cooperative Soil Survey is a joint effort of the United States Department of Agriculture and other Federal agencies, State agencies including the Agricultural Experiment Stations, and local agencies. The Natural Resources Conservation Service (NRCS) has leadership for the Federal part of the National Cooperative Soil Survey.

Information about soils is updated periodically. Updated information is available through the NRCS Web Soil Survey, the site for official soil survey information.

The U.S. Department of Agriculture (USDA) prohibits discrimination in all its programs and activities on the basis of race, color, national origin, age, disability, and where applicable, sex, marital status, familial status, parental status, religion, sexual orientation, genetic information, political beliefs, reprisal, or because all or a part of an individual's income is derived from any public assistance program. (Not all prohibited bases apply to all programs.) Persons with disabilities who require

alternative means for communication of program information (Braille, large print, audiotape, etc.) should contact USDA's TARGET Center at (202) 720-2600 (voice and TDD). To file a complaint of discrimination, write to USDA, Director, Office of Civil Rights, 1400 Independence Avenue, S.W., Washington, D.C. 20250-9410 or call (800) 795-3272 (voice) or (202) 720-6382 (TDD). USDA is an equal opportunity provider and employer.

Contents

Preface.....2
How Soil Surveys Are Made.....5
Soil Map.....8
Soil Map.....9
Legend.....10
Map Unit Legend.....11
Map Unit Descriptions.....11
Essex County, Massachusetts, Northern Part.....13
1—Water.....13
253B—Hinckley loamy sand, 3 to 8 percent slopes.....13
253C—Hinckley loamy sand, 8 to 15 percent slopes.....15
257E—Hinckley and Windsor soils, 25 to 35 percent slopes.....16
602—Urban land.....18
651—Udorthents, smoothed.....19
References.....21

How Soil Surveys Are Made

Soil surveys are made to provide information about the soils and miscellaneous areas in a specific area. They include a description of the soils and miscellaneous areas and their location on the landscape and tables that show soil properties and limitations affecting various uses. Soil scientists observed the steepness, length, and shape of the slopes; the general pattern of drainage; the kinds of crops and native plants; and the kinds of bedrock. They observed and described many soil profiles. A soil profile is the sequence of natural layers, or horizons, in a soil. The profile extends from the surface down into the unconsolidated material in which the soil formed or from the surface down to bedrock. The unconsolidated material is devoid of roots and other living organisms and has not been changed by other biological activity.

Currently, soils are mapped according to the boundaries of major land resource areas (MLRAs). MLRAs are geographically associated land resource units that share common characteristics related to physiography, geology, climate, water resources, soils, biological resources, and land uses (USDA, 2006). Soil survey areas typically consist of parts of one or more MLRA.

The soils and miscellaneous areas in a survey area occur in an orderly pattern that is related to the geology, landforms, relief, climate, and natural vegetation of the area. Each kind of soil and miscellaneous area is associated with a particular kind of landform or with a segment of the landform. By observing the soils and miscellaneous areas in the survey area and relating their position to specific segments of the landform, a soil scientist develops a concept, or model, of how they were formed. Thus, during mapping, this model enables the soil scientist to predict with a considerable degree of accuracy the kind of soil or miscellaneous area at a specific location on the landscape.

Commonly, individual soils on the landscape merge into one another as their characteristics gradually change. To construct an accurate soil map, however, soil scientists must determine the boundaries between the soils. They can observe only a limited number of soil profiles. Nevertheless, these observations, supplemented by an understanding of the soil-vegetation-landscape relationship, are sufficient to verify predictions of the kinds of soil in an area and to determine the boundaries.

Soil scientists recorded the characteristics of the soil profiles that they studied. They noted soil color, texture, size and shape of soil aggregates, kind and amount of rock fragments, distribution of plant roots, reaction, and other features that enable them to identify soils. After describing the soils in the survey area and determining their properties, the soil scientists assigned the soils to taxonomic classes (units). Taxonomic classes are concepts. Each taxonomic class has a set of soil characteristics with precisely defined limits. The classes are used as a basis for comparison to classify soils systematically. Soil taxonomy, the system of taxonomic classification used in the United States, is based mainly on the kind and character of soil properties and the arrangement of horizons within the profile. After the soil

scientists classified and named the soils in the survey area, they compared the individual soils with similar soils in the same taxonomic class in other areas so that they could confirm data and assemble additional data based on experience and research.

The objective of soil mapping is not to delineate pure map unit components; the objective is to separate the landscape into landforms or landform segments that have similar use and management requirements. Each map unit is defined by a unique combination of soil components and/or miscellaneous areas in predictable proportions. Some components may be highly contrasting to the other components of the map unit. The presence of minor components in a map unit in no way diminishes the usefulness or accuracy of the data. The delineation of such landforms and landform segments on the map provides sufficient information for the development of resource plans. If intensive use of small areas is planned, onsite investigation is needed to define and locate the soils and miscellaneous areas.

Soil scientists make many field observations in the process of producing a soil map. The frequency of observation is dependent upon several factors, including scale of mapping, intensity of mapping, design of map units, complexity of the landscape, and experience of the soil scientist. Observations are made to test and refine the soil-landscape model and predictions and to verify the classification of the soils at specific locations. Once the soil-landscape model is refined, a significantly smaller number of measurements of individual soil properties are made and recorded. These measurements may include field measurements, such as those for color, depth to bedrock, and texture, and laboratory measurements, such as those for content of sand, silt, clay, salt, and other components. Properties of each soil typically vary from one point to another across the landscape.

Observations for map unit components are aggregated to develop ranges of characteristics for the components. The aggregated values are presented. Direct measurements do not exist for every property presented for every map unit component. Values for some properties are estimated from combinations of other properties.

While a soil survey is in progress, samples of some of the soils in the area generally are collected for laboratory analyses and for engineering tests. Soil scientists interpret the data from these analyses and tests as well as the field-observed characteristics and the soil properties to determine the expected behavior of the soils under different uses. Interpretations for all of the soils are field tested through observation of the soils in different uses and under different levels of management. Some interpretations are modified to fit local conditions, and some new interpretations are developed to meet local needs. Data are assembled from other sources, such as research information, production records, and field experience of specialists. For example, data on crop yields under defined levels of management are assembled from farm records and from field or plot experiments on the same kinds of soil.

Predictions about soil behavior are based not only on soil properties but also on such variables as climate and biological activity. Soil conditions are predictable over long periods of time, but they are not predictable from year to year. For example, soil scientists can predict with a fairly high degree of accuracy that a given soil will have a high water table within certain depths in most years, but they cannot predict that a high water table will always be at a specific level in the soil on a specific date.

After soil scientists located and identified the significant natural bodies of soil in the survey area, they drew the boundaries of these bodies on aerial photographs and

identified each as a specific map unit. Aerial photographs show trees, buildings, fields, roads, and rivers, all of which help in locating boundaries accurately.

Soil Map

The soil map section includes the soil map for the defined area of interest, a list of soil map units on the map and extent of each map unit, and cartographic symbols displayed on the map. Also presented are various metadata about data used to produce the map, and a description of each soil map unit.

Custom Soil Resource Report
Soil Map

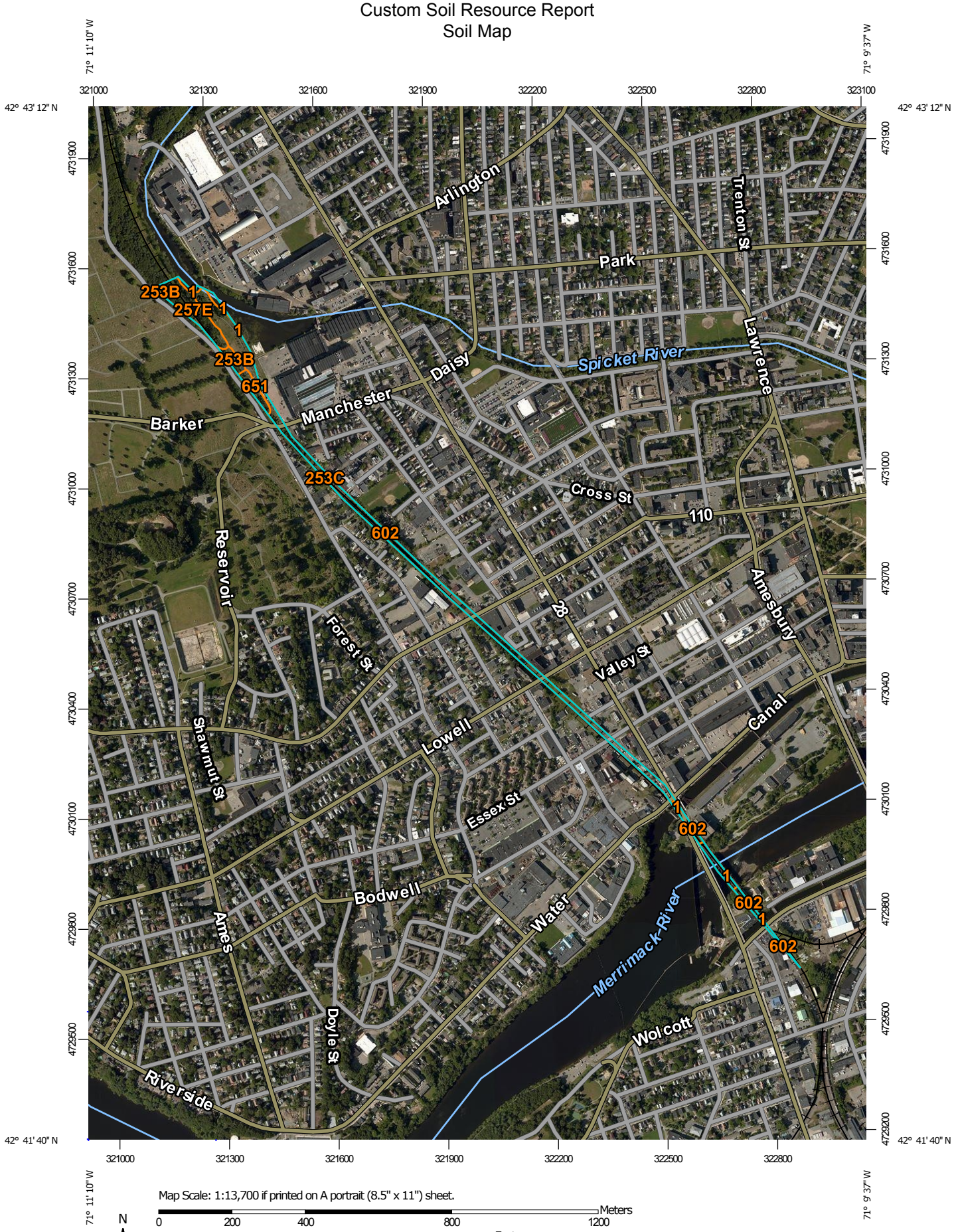

MAP LEGEND

Area of Interest (AOI)
- Area of Interest (AOI)

Soils
- Soil Map Unit Polygons
- Soil Map Unit Lines
- Soil Map Unit Points

Special Point Features
- Blowout
- Borrow Pit
- Clay Spot
- Closed Depression
- Gravel Pit
- Gravelly Spot
- Landfill
- Lava Flow
- Marsh or swamp
- Mine or Quarry
- Miscellaneous Water
- Perennial Water
- Rock Outcrop
- Saline Spot
- Sandy Spot
- Severely Eroded Spot
- Sinkhole
- Slide or Slip
- Sodic Spot
- Spoil Area
- Stony Spot
- Very Stony Spot
- Wet Spot
- Other
- Special Line Features

Water Features
- Streams and Canals

Transportation
- Rails
- Interstate Highways
- US Routes
- Major Roads
- Local Roads

Background
- Aerial Photography

MAP INFORMATION

The soil surveys that comprise your AOI were mapped at 1:15,800.

Please rely on the bar scale on each map sheet for map measurements.

Source of Map: Natural Resources Conservation Service
Web Soil Survey URL:
Coordinate System: Web Mercator (EPSG:3857)

Maps from the Web Soil Survey are based on the Web Mercator projection, which preserves direction and shape but distorts distance and area. A projection that preserves area, such as the Albers equal-area conic projection, should be used if more accurate calculations of distance or area are required.

This product is generated from the USDA-NRCS certified data as of the version date(s) listed below.

Soil Survey Area: Essex County, Massachusetts, Northern Part
Survey Area Data: Version 12, Sep 14, 2016

Soil map units are labeled (as space allows) for map scales 1:50,000 or larger.

Date(s) aerial images were photographed: Aug 29, 2014—Sep 19, 2014

The orthophoto or other base map on which the soil lines were compiled and digitized probably differs from the background imagery displayed on these maps. As a result, some minor shifting of map unit boundaries may be evident.

A00860 - 177

Proposal No. 608930-128034

Map Unit Legend

Essex County, Massachusetts, Northern Part (MA605)			
Map Unit Symbol	**Map Unit Name**	**Acres in AOI**	**Percent of AOI**
1	Water	1.1	7.9%
253B	Hinckley loamy sand, 3 to 8 percent slopes	0.6	4.1%
253C	Hinckley loamy sand, 8 to 15 percent slopes	0.0	0.0%
257E	Hinckley and Windsor soils, 25 to 35 percent slopes	2.6	18.1%
602	Urban land	9.3	65.0%
651	Udorthents, smoothed	0.7	4.9%
Totals for Area of Interest		**14.3**	**100.0%**

Map Unit Descriptions

The map units delineated on the detailed soil maps in a soil survey represent the soils or miscellaneous areas in the survey area. The map unit descriptions, along with the maps, can be used to determine the composition and properties of a unit.

A map unit delineation on a soil map represents an area dominated by one or more major kinds of soil or miscellaneous areas. A map unit is identified and named according to the taxonomic classification of the dominant soils. Within a taxonomic class there are precisely defined limits for the properties of the soils. On the landscape, however, the soils are natural phenomena, and they have the characteristic variability of all natural phenomena. Thus, the range of some observed properties may extend beyond the limits defined for a taxonomic class. Areas of soils of a single taxonomic class rarely, if ever, can be mapped without including areas of other taxonomic classes. Consequently, every map unit is made up of the soils or miscellaneous areas for which it is named and some minor components that belong to taxonomic classes other than those of the major soils.

Most minor soils have properties similar to those of the dominant soil or soils in the map unit, and thus they do not affect use and management. These are called noncontrasting, or similar, components. They may or may not be mentioned in a particular map unit description. Other minor components, however, have properties and behavioral characteristics divergent enough to affect use or to require different management. These are called contrasting, or dissimilar, components. They generally are in small areas and could not be mapped separately because of the scale used. Some small areas of strongly contrasting soils or miscellaneous areas are identified by a special symbol on the maps. If included in the database for a given area, the contrasting minor components are identified in the map unit descriptions along with some characteristics of each. A few areas of minor components may not have been observed, and consequently they are not mentioned in the descriptions, especially where the pattern was so complex that it

was impractical to make enough observations to identify all the soils and miscellaneous areas on the landscape.

The presence of minor components in a map unit in no way diminishes the usefulness or accuracy of the data. The objective of mapping is not to delineate pure taxonomic classes but rather to separate the landscape into landforms or landform segments that have similar use and management requirements. The delineation of such segments on the map provides sufficient information for the development of resource plans. If intensive use of small areas is planned, however, onsite investigation is needed to define and locate the soils and miscellaneous areas.

An identifying symbol precedes the map unit name in the map unit descriptions. Each description includes general facts about the unit and gives important soil properties and qualities.

Soils that have profiles that are almost alike make up a *soil series*. Except for differences in texture of the surface layer, all the soils of a series have major horizons that are similar in composition, thickness, and arrangement.

Soils of one series can differ in texture of the surface layer, slope, stoniness, salinity, degree of erosion, and other characteristics that affect their use. On the basis of such differences, a soil series is divided into *soil phases*. Most of the areas shown on the detailed soil maps are phases of soil series. The name of a soil phase commonly indicates a feature that affects use or management. For example, Alpha silt loam, 0 to 2 percent slopes, is a phase of the Alpha series.

Some map units are made up of two or more major soils or miscellaneous areas. These map units are complexes, associations, or undifferentiated groups.

A *complex* consists of two or more soils or miscellaneous areas in such an intricate pattern or in such small areas that they cannot be shown separately on the maps. The pattern and proportion of the soils or miscellaneous areas are somewhat similar in all areas. Alpha-Beta complex, 0 to 6 percent slopes, is an example.

An *association* is made up of two or more geographically associated soils or miscellaneous areas that are shown as one unit on the maps. Because of present or anticipated uses of the map units in the survey area, it was not considered practical or necessary to map the soils or miscellaneous areas separately. The pattern and relative proportion of the soils or miscellaneous areas are somewhat similar. Alpha-Beta association, 0 to 2 percent slopes, is an example.

An *undifferentiated group* is made up of two or more soils or miscellaneous areas that could be mapped individually but are mapped as one unit because similar interpretations can be made for use and management. The pattern and proportion of the soils or miscellaneous areas in a mapped area are not uniform. An area can be made up of only one of the major soils or miscellaneous areas, or it can be made up of all of them. Alpha and Beta soils, 0 to 2 percent slopes, is an example.

Some surveys include *miscellaneous areas*. Such areas have little or no soil material and support little or no vegetation. Rock outcrop is an example.

Essex County, Massachusetts, Northern Part

1—Water

Map Unit Setting

National map unit symbol: vjx4
Frost-free period: 125 to 165 days
Farmland classification: Not prime farmland

Map Unit Composition

Water: 100 percent
Estimates are based on observations, descriptions, and transects of the mapunit.

253B—Hinckley loamy sand, 3 to 8 percent slopes

Map Unit Setting

National map unit symbol: 2svm8
Elevation: 0 to 1,430 feet
Mean annual precipitation: 36 to 53 inches
Mean annual air temperature: 39 to 55 degrees F
Frost-free period: 140 to 250 days
Farmland classification: Farmland of statewide importance

Map Unit Composition

Hinckley and similar soils: 85 percent
Minor components: 15 percent
Estimates are based on observations, descriptions, and transects of the mapunit.

Description of Hinckley

Setting

Landform: Eskers, kames, kame terraces, outwash plains, outwash terraces, moraines, outwash deltas
Landform position (two-dimensional): Summit, shoulder, backslope, footslope
Landform position (three-dimensional): Nose slope, side slope, base slope, crest, tread, riser
Down-slope shape: Linear, convex, concave
Across-slope shape: Convex, linear, concave
Parent material: Sandy and gravelly glaciofluvial deposits derived from gneiss and/or granite and/or schist

Typical profile

Oe - 0 to 1 inches: moderately decomposed plant material
A - 1 to 8 inches: loamy sand
Bw1 - 8 to 11 inches: gravelly loamy sand
Bw2 - 11 to 16 inches: gravelly loamy sand
BC - 16 to 19 inches: very gravelly loamy sand
C - 19 to 65 inches: very gravelly sand

Properties and qualities

Slope: 3 to 8 percent
Depth to restrictive feature: More than 80 inches

Natural drainage class: Excessively drained
Runoff class: Very low
Capacity of the most limiting layer to transmit water (Ksat): Moderately high to very high (1.42 to 99.90 in/hr)
Depth to water table: More than 80 inches
Frequency of flooding: None
Frequency of ponding: None
Salinity, maximum in profile: Nonsaline to very slightly saline (0.0 to 2.0 mmhos/cm)
Available water storage in profile: Very low (about 3.0 inches)

Interpretive groups

Land capability classification (irrigated): None specified
Land capability classification (nonirrigated): 3s
Hydrologic Soil Group: A
Hydric soil rating: No

Minor Components

Windsor

Percent of map unit: 8 percent
Landform: Eskers, kames, kame terraces, outwash plains, outwash terraces, moraines, outwash deltas
Landform position (two-dimensional): Summit, shoulder, backslope, footslope
Landform position (three-dimensional): Nose slope, side slope, base slope, crest, tread, riser
Down-slope shape: Linear, convex, concave
Across-slope shape: Convex, linear, concave
Hydric soil rating: No

Sudbury

Percent of map unit: 5 percent
Landform: Kame terraces, outwash plains, outwash terraces, moraines, outwash deltas
Landform position (two-dimensional): Backslope, footslope
Landform position (three-dimensional): Side slope, base slope, head slope, tread
Down-slope shape: Concave, linear
Across-slope shape: Linear, concave
Hydric soil rating: No

Agawam

Percent of map unit: 2 percent
Landform: Eskers, kames, kame terraces, outwash plains, outwash terraces, moraines, outwash deltas
Landform position (two-dimensional): Summit, shoulder, backslope, footslope
Landform position (three-dimensional): Nose slope, side slope, base slope, crest, tread, riser
Down-slope shape: Linear, convex, concave
Across-slope shape: Convex, linear, concave
Hydric soil rating: No

253C—Hinckley loamy sand, 8 to 15 percent slopes

Map Unit Setting

National map unit symbol: 2svm9
Elevation: 0 to 1,480 feet
Mean annual precipitation: 36 to 71 inches
Mean annual air temperature: 39 to 55 degrees F
Frost-free period: 140 to 240 days
Farmland classification: Not prime farmland

Map Unit Composition

Hinckley and similar soils: 85 percent
Minor components: 15 percent
Estimates are based on observations, descriptions, and transects of the mapunit.

Description of Hinckley

Setting

Landform: Eskers, kames, kame terraces, outwash plains, outwash terraces, moraines, outwash deltas
Landform position (two-dimensional): Shoulder, toeslope, footslope, backslope
Landform position (three-dimensional): Crest, head slope, nose slope, side slope, riser
Down-slope shape: Convex, concave, linear
Across-slope shape: Concave, linear, convex
Parent material: Sandy and gravelly glaciofluvial deposits derived from gneiss and/or granite and/or schist

Typical profile

Oe - 0 to 1 inches: moderately decomposed plant material
A - 1 to 8 inches: loamy sand
Bw1 - 8 to 11 inches: gravelly loamy sand
Bw2 - 11 to 16 inches: gravelly loamy sand
BC - 16 to 19 inches: very gravelly loamy sand
C - 19 to 65 inches: very gravelly sand

Properties and qualities

Slope: 8 to 15 percent
Depth to restrictive feature: More than 80 inches
Natural drainage class: Excessively drained
Runoff class: Very low
Capacity of the most limiting layer to transmit water (Ksat): Moderately high to very high (1.42 to 99.90 in/hr)
Depth to water table: More than 80 inches
Frequency of flooding: None
Frequency of ponding: None
Salinity, maximum in profile: Nonsaline to very slightly saline (0.0 to 2.0 mmhos/cm)
Available water storage in profile: Low (about 3.1 inches)

Interpretive groups

Land capability classification (irrigated): None specified
Land capability classification (nonirrigated): 4e
Hydrologic Soil Group: A
Hydric soil rating: No

Minor Components

Windsor

Percent of map unit: 5 percent
Landform: Eskers, kames, kame terraces, outwash plains, outwash terraces, moraines, outwash deltas
Landform position (two-dimensional): Shoulder, backslope, footslope, toeslope
Landform position (three-dimensional): Nose slope, side slope, crest, head slope, riser
Down-slope shape: Convex, concave, linear
Across-slope shape: Concave, linear, convex
Hydric soil rating: No

Sudbury

Percent of map unit: 5 percent
Landform: Kame terraces, outwash plains, outwash terraces, moraines, outwash deltas
Landform position (two-dimensional): Backslope, footslope
Landform position (three-dimensional): Base slope, tread
Down-slope shape: Concave, linear
Across-slope shape: Linear, concave
Hydric soil rating: No

Merrimac

Percent of map unit: 5 percent
Landform: Eskers, kames, outwash plains, outwash terraces, moraines
Landform position (two-dimensional): Shoulder, backslope, footslope, toeslope
Landform position (three-dimensional): Side slope, head slope, nose slope, crest, riser
Down-slope shape: Convex
Across-slope shape: Convex
Hydric soil rating: No

257E—Hinckley and Windsor soils, 25 to 35 percent slopes

Map Unit Setting

National map unit symbol: 2svm2
Elevation: 0 to 1,470 feet
Mean annual precipitation: 36 to 71 inches
Mean annual air temperature: 39 to 55 degrees F
Frost-free period: 145 to 240 days
Farmland classification: Not prime farmland

Map Unit Composition

Hinckley and similar soils: 50 percent
Windsor and similar soils: 40 percent
Minor components: 10 percent
Estimates are based on observations, descriptions, and transects of the mapunit.

Description of Hinckley

Setting

Landform: Eskers, kames, kame terraces, outwash plains, outwash terraces, moraines, outwash deltas
Landform position (two-dimensional): Backslope
Landform position (three-dimensional): Nose slope, side slope, crest, head slope, riser
Down-slope shape: Linear, convex, concave
Across-slope shape: Linear, concave, convex
Parent material: Sandy and gravelly glaciofluvial deposits derived from gneiss and/or granite and/or schist

Typical profile

Oe - 0 to 1 inches: moderately decomposed plant material
A - 1 to 8 inches: loamy sand
Bw1 - 8 to 11 inches: gravelly loamy sand
Bw2 - 11 to 16 inches: gravelly loamy sand
BC - 16 to 19 inches: very gravelly loamy sand
C - 19 to 65 inches: very gravelly sand

Properties and qualities

Slope: 25 to 35 percent
Depth to restrictive feature: More than 80 inches
Natural drainage class: Excessively drained
Runoff class: Very low
Capacity of the most limiting layer to transmit water (Ksat): Moderately high to very high (1.42 to 99.90 in/hr)
Depth to water table: More than 80 inches
Frequency of flooding: None
Frequency of ponding: None
Salinity, maximum in profile: Nonsaline to very slightly saline (0.0 to 2.0 mmhos/cm)
Available water storage in profile: Low (about 3.1 inches)

Interpretive groups

Land capability classification (irrigated): None specified
Land capability classification (nonirrigated): 6e
Hydrologic Soil Group: A
Hydric soil rating: No

Description of Windsor

Setting

Landform: Eskers, kames, kame terraces, outwash plains, outwash terraces, moraines, outwash deltas
Landform position (two-dimensional): Backslope
Landform position (three-dimensional): Nose slope, side slope, crest, head slope, riser
Down-slope shape: Concave, convex, linear

Across-slope shape: Linear, concave, convex
Parent material: Loose sandy glaciofluvial deposits derived from granite and/or loose sandy glaciofluvial deposits derived from schist and/or loose sandy glaciofluvial deposits derived from gneiss

Typical profile

Oe - 0 to 1 inches: moderately decomposed plant material
A - 1 to 3 inches: loamy sand
Bw - 3 to 25 inches: loamy sand
C - 25 to 65 inches: sand

Properties and qualities

Slope: 25 to 35 percent
Depth to restrictive feature: More than 80 inches
Natural drainage class: Excessively drained
Runoff class: Very low
Capacity of the most limiting layer to transmit water (Ksat): Moderately high to very high (1.42 to 99.90 in/hr)
Depth to water table: More than 80 inches
Frequency of flooding: None
Frequency of ponding: None
Salinity, maximum in profile: Nonsaline to very slightly saline (0.0 to 2.0 mmhos/cm)
Available water storage in profile: Low (about 5.4 inches)

Interpretive groups

Land capability classification (irrigated): None specified
Land capability classification (nonirrigated): 4e
Hydrologic Soil Group: A
Hydric soil rating: No

Minor Components

Merrimac

Percent of map unit: 10 percent
Landform: Eskers, kames, kame terraces, outwash plains, outwash terraces, moraines
Landform position (two-dimensional): Backslope
Landform position (three-dimensional): Side slope, head slope, nose slope, crest, riser
Down-slope shape: Concave, linear, convex
Across-slope shape: Linear, concave, convex
Hydric soil rating: No

602—Urban land

Map Unit Setting

National map unit symbol: vjx3
Frost-free period: 125 to 165 days
Farmland classification: Not prime farmland

Map Unit Composition
Urban land: 80 percent
Minor components: 20 percent
Estimates are based on observations, descriptions, and transects of the mapunit.

Description of Urban Land

Setting
Parent material: Excavated and filled land

Minor Components

Udorthents
Percent of map unit: 10 percent
Hydric soil rating: No

Charlton
Percent of map unit: 2 percent
Hydric soil rating: No

Hinckley
Percent of map unit: 2 percent
Hydric soil rating: No

Merrimac
Percent of map unit: 2 percent
Hydric soil rating: No

Paxton
Percent of map unit: 2 percent
Hydric soil rating: No

Windsor
Percent of map unit: 2 percent
Hydric soil rating: No

651—Udorthents, smoothed

Map Unit Setting
National map unit symbol: vjwk
Elevation: 0 to 3,000 feet
Mean annual precipitation: 45 to 54 inches
Mean annual air temperature: 43 to 54 degrees F
Frost-free period: 145 to 240 days
Farmland classification: Not prime farmland

Map Unit Composition
Udorthents and similar soils: 80 percent
Minor components: 20 percent
Estimates are based on observations, descriptions, and transects of the mapunit.

Description of Udorthents

Setting

Parent material: Excavated and filled land loamy and/or excavated and filled land sandy and gravelly

Typical profile

H1 - 0 to 6 inches: variable
H2 - 6 to 60 inches: variable

Properties and qualities

Slope: 0 to 3 percent
Depth to restrictive feature: More than 80 inches
Capacity of the most limiting layer to transmit water (Ksat): Moderately low to very high (0.06 to 20.00 in/hr)
Depth to water table: More than 80 inches
Frequency of flooding: None
Frequency of ponding: None

Interpretive groups

Land capability classification (irrigated): None specified
Land capability classification (nonirrigated): 6s
Hydrologic Soil Group: A
Hydric soil rating: Unranked

Minor Components

Urban land

Percent of map unit: 10 percent
Hydric soil rating: Unranked

Beaches

Percent of map unit: 8 percent
Hydric soil rating: Unranked

Dumps

Percent of map unit: 2 percent
Hydric soil rating: Unranked

References

American Association of State Highway and Transportation Officials (AASHTO). 2004. Standard specifications for transportation materials and methods of sampling and testing. 24th edition.

American Society for Testing and Materials (ASTM). 2005. Standard classification of soils for engineering purposes. ASTM Standard D2487-00.

Cowardin, L.M., V. Carter, F.C. Golet, and E.T. LaRoe. 1979. Classification of wetlands and deep-water habitats of the United States. U.S. Fish and Wildlife Service FWS/OBS-79/31.

Federal Register. July 13, 1994. Changes in hydric soils of the United States.

Federal Register. September 18, 2002. Hydric soils of the United States.

Hurt, G.W., and L.M. Vasilas, editors. Version 6.0, 2006. Field indicators of hydric soils in the United States.

National Research Council. 1995. Wetlands: Characteristics and boundaries.

Soil Survey Division Staff. 1993. Soil survey manual. Soil Conservation Service. U.S. Department of Agriculture Handbook 18. http://www.nrcs.usda.gov/wps/portal/nrcs/detail/national/soils/?cid=nrcs142p2_054262

Soil Survey Staff. 1999. Soil taxonomy: A basic system of soil classification for making and interpreting soil surveys. 2nd edition. Natural Resources Conservation Service, U.S. Department of Agriculture Handbook 436. http://www.nrcs.usda.gov/wps/portal/nrcs/detail/national/soils/?cid=nrcs142p2_053577

Soil Survey Staff. 2010. Keys to soil taxonomy. 11th edition. U.S. Department of Agriculture, Natural Resources Conservation Service. http://www.nrcs.usda.gov/wps/portal/nrcs/detail/national/soils/?cid=nrcs142p2_053580

Tiner, R.W., Jr. 1985. Wetlands of Delaware. U.S. Fish and Wildlife Service and Delaware Department of Natural Resources and Environmental Control, Wetlands Section.

United States Army Corps of Engineers, Environmental Laboratory. 1987. Corps of Engineers wetlands delineation manual. Waterways Experiment Station Technical Report Y-87-1.

United States Department of Agriculture, Natural Resources Conservation Service. National forestry manual. http://www.nrcs.usda.gov/wps/portal/nrcs/detail/soils/home/?cid=nrcs142p2_053374

United States Department of Agriculture, Natural Resources Conservation Service. National range and pasture handbook. http://www.nrcs.usda.gov/wps/portal/nrcs/detail/national/landuse/rangepasture/?cid=stelprdb1043084

United States Department of Agriculture, Natural Resources Conservation Service. National soil survey handbook, title 430-VI. http://www.nrcs.usda.gov/wps/portal/nrcs/detail/soils/scientists/?cid=nrcs142p2_054242

United States Department of Agriculture, Natural Resources Conservation Service. 2006. Land resource regions and major land resource areas of the United States, the Caribbean, and the Pacific Basin. U.S. Department of Agriculture Handbook 296. http://www.nrcs.usda.gov/wps/portal/nrcs/detail/national/soils/?cid=nrcs142p2_053624

United States Department of Agriculture, Soil Conservation Service. 1961. Land capability classification. U.S. Department of Agriculture Handbook 210. http://www.nrcs.usda.gov/Internet/FSE_DOCUMENTS/nrcs142p2_052290.pdf

RECOMMENDED WETLAND FLAGGING REVISIONS BASED ON MEETING WITH CITY OF LAWRENCE CONSERVATION COMMISSION

OLIVER PLACE (PRIVATE)

OLIVER PLACE (PRIVATE)

CLYDE LANE (PRIVATE)

100-FT BUFFER ZONE

N/F
T FINO REALTY, LLC
BK/PG 9940/163
420 HAVERHILL ST & 135 BRADFORD
PL 6294
167-1

N/F
CITY OF LAWRENCE
BK/PG 10095/356
8 BRADFORD PLACE
166-41

N/F
MONICAH MARSH
BK/PG 14131/253
10-14 BRADFORD PLACE
166-40

N/F
283 LOWELL STREET LAWRENCE, LLC
BK/PG 12763/126
283 LOWELL ST
166-31

ENCROACHMENT EASEMENT
BK/PG 3036/317

3' MAINTAINENCE EASEMENT
BK/PG 3036/317

NAD 83

23
N: 3082801.640'
E: 744183.031'
EL: 54.419'
MAG

25
N: 3082537.146'
E: 744471.239'
EL: 52.147'
MAG

24
N: 3082659.332'
E: 744336.078'
EL: 52.988'
MAG

S47°07'05"E
770.75'

S47°07'05"E
770.75'

S47°07'05"E
775.10'

S47°07'05"E
775.10'

3940.95'
S47°07'06"E

3940.95'
S47°07'06"E

STONE RETAINING WALL

STONE RETAINING WALL

RR VAL MAP SEC. 7.4-2

RR VAL MAP SEC. 7.4-1

RR VAL MAP SEC. 7.4-2

RR VAL MAP SEC. 7.4-1

EXISTING RAILROAD

EXISTING RAILROAD

EXISTING RAILROAD

EXISTING RAILROAD

SURVEY TRAVERSE

SURVEY TRAVERSE

SURVEY TRAVERSE

SURVEY TRAVERSE

RR BASELINE

RR BASELINE

MASSD

BRIDGE

CONTINUED ON SHEET 9

CONTINUED ON SHEET 11

10' STEAMLINE EASEMENT
BK/PG 1581/11

LIMIT OF RESOURCE AREA
AS FLAGGED BY NOVER ARMSTRONG
ON MARCH 10, 2017. (TYP.)

N/F
LAWRENCE HOUSING AUTHORITY
BK/PG -/-
33-47 MORTON ST
166-18

N/F
DAKE, LLC
BK/PG 9501/326
27-31 MORTON ST
PL 4418
166-19

N/F
JEAN GAGNON
BK/PG 1148/332
17 MORTON ST
166-21

N/F
MASSACHUSETTS BAY TRANSPORTATION AUTHORITY
BK/PG 1299/162
HAVERHILL STREET
167-2

N/F
DAVID R. SIROIS
BK/PG 5429/177
291 LOWELL ST
PL 1011
166-29

100-FT BUFFER ZONE

100-FT BUFFER ZONE

N: 3082750
E: 744000

N: 3082500
E: 744250

CITY LAYOUT
MORTON STREET
(PUBLIC - 50.0' WIDE)

11' PASSAGEWAY

"POLE #MECO 8828"

"POLE #MECO 8827"

PHRAGMITES

TREELINE(TYP.)

BVW

OHW

UPL

VZ(MCI)

0 20 50 100
SCALE: 1" = 20'

A00860 - 190

16194_SV (2D PLUS SURFACE FEATURES).DWG 3/16/2017

GPI Greenman-Pedersen, Inc.
Engineers, Architects, Planners, Construction Engineers & Inspectors
181 Ballardvale Street, Suite 202, Wilmington, MA 01887
Tel: (978) 570-2999 Fax: (978) 658-3044
http://www.gpinet.com

COMMONWEALTH OF MASSACHUSETTS
JEFFREY P. BRADFORD
41862
PROFESSIONAL LAND SURVEYOR
4/26/2017

PREPARED FOR
Groundwork Lawrence
50 Island Street
Lawrence, MA 01840

MANCHESTER-LAWRENCE RAIL TRAIL
LAWRENCE, MA

Proposal No. 608930-128034

REVISIONS		
NO.	REVISION	DATE

APRIL 28, 2017

DRAWN/DESIGN BY	CHECKED BY
FD	JPB

SURVEY BASEPLAN

SCALE: 1"=20'

SHEET #

10 OF 20

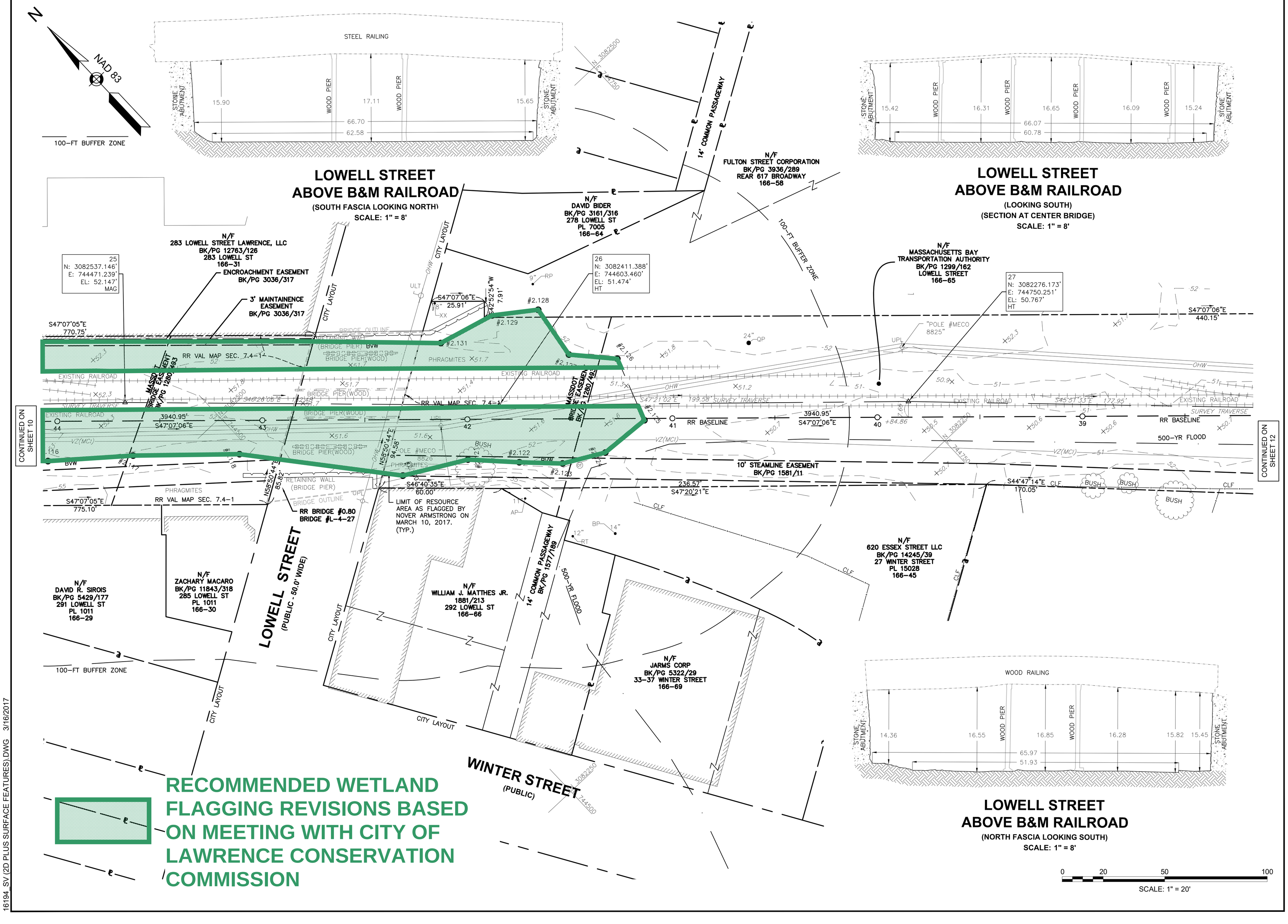

GPI Greenman-Pedersen, Inc.
Engineers, Architects, Planners, Construction Engineers & Inspectors
181 Ballardvale Street, Suite 202, Wilmington, MA 01887
Tel: (978) 570-2999 Fax: (978) 658-3044
http://www.gpinet.com

COMMONWEALTH OF MASSACHUSETTS
JEFFREY P. BRADFORD
41862
PROFESSIONAL LAND SURVEYOR
4/26/2017

PREPARED FOR
Groundwork Lawrence
50 Island Street
Lawrence, MA 01840

MANCHESTER-LAWRENCE RAIL TRAIL LAWRENCE, MA

REVISIONS		
NO.	REVISION	DATE
	APRIL 28, 2017	
DRAWN/DESIGN BY: FD		CHECKED BY: JPB

SURVEY BASEPLAN

SCALE: 1"=20'

SHEET # 11 OF 20

Proposal No. 608930-128034

A00860 - 191

16194_SV (2D PLUS SURFACE FEATURES).DWG 3/16/2017

ATTACHMENT E – MESA and USFWS Correspondence

MASSWILDLIFE

DIVISION OF
FISHERIES & WILDLIFE

1 Rabbit Hill Road, Westborough, MA 01581
p: (508) 389-6300 | f: (508) 389-7890
MASS.GOV/MASSWILDLIFE

January 05, 2023

Gregory Russo
TRC Environmental
650 Suffolk Street
Lowell MA 01854

RE: Project Location: Railroad ROW between Merrimack River and Immaculate Conception Cemetery
Town: LAWRENCE
NHESP Tracking No.: 23-41576

To Whom It May Concern:

Thank you for contacting the Natural Heritage and Endangered Species Program of the MA Division of Fisheries & Wildlife (the "Division") for information regarding state-listed rare species in the vicinity of the above referenced site. Based on the information provided, this project site, or a portion thereof, is located **within** *Priority Habitat 2154* (PH 2154) and *Estimated Habitat 1362* (EH 1362) as indicated in the *Massachusetts Natural Heritage Atlas* (15th Edition) for the following state-listed rare species:

Scientific name	Common Name	Taxonomic Group	State Status
Acipenser brevirostrum	Shortnose Sturgeon	Fish	Endangered
Acipenser oxyrinchus	Atlantic Sturgeon	Fish	Endangered

The species listed above are protected under the Massachusetts Endangered Species Act (MESA) (M.G.L. c. 131A) and its implementing regulations (321 CMR 10.00). State-listed wildlife are also protected under the state's Wetlands Protection Act (WPA) (M.G.L. c. 131, s. 40) and its implementing regulations (310 CMR 10.00). Fact sheets for most state-listed rare species can be found on our website (www.mass.gov/nhesp).

Please note that projects and activities located within Priority and/or Estimated Habitat **must** be reviewed by the Division for compliance with the state-listed rare species protection provisions of MESA (321 CMR 10.00) and/or the WPA (310 CMR 10.00).

Wetlands Protection Act (WPA)
If the project site is within Estimated Habitat and a Notice of Intent (NOI) is required, then a copy of the NOI must be submitted to the Division so that it is received at the same time as the local conservation commission. If the Division determines that the proposed project will adversely affect the actual Resource Area habitat of state-protected wildlife, then the proposed project may not be permitted (310 CMR 10.37, 10.58(4)(b) & 10.59). In such a case, the project proponent may request a consultation with the Division to discuss potential project design modifications that would avoid adverse effects to rare wildlife habitat.

A streamlined joint MESA/WPA review process is available. When filing a Notice of Intent (NOI), the applicant may file concurrently under the MESA on the same NOI form and qualify for a 30-day streamlined joint review. For a copy of the NOI form, please visit the MA Department of Environmental Protection's website: https://www.mass.gov/how-to/wpa-form-3-wetlands-notice-of-intent.

MA Endangered Species Act (MESA)

If the proposed project is located within Priority Habitat and is not exempt from review (see 321 CMR 10.14), then project plans, a fee, and other required materials must be sent to Natural Heritage Regulatory Review to determine whether a probable Take under the MA Endangered Species Act would occur (321 CMR 10.18). Please note that all proposed and anticipated development must be disclosed, as MESA does not allow project segmentation (321 CMR 10.16). For a MESA filing checklist and additional information please see our website: https://www.mass.gov/regulatory-review.

We recommend that rare species habitat concerns be addressed during the project design phase prior to submission of a formal MESA filing, as avoidance and minimization of impacts to rare species and their habitats is likely to expedite endangered species regulatory review.

This evaluation is based on the most recent information available in the Natural Heritage database, which is constantly being expanded and updated through ongoing research and inventory. If the purpose of your inquiry is to generate a species list to fulfill the federal Endangered Species Act (16 U.S.C. 1531 et seq.) information requirements for a permit, proposal, or authorization of any kind from a federal agency, we recommend that you contact the National Marine Fisheries Service at (978)281-9328 and use the U.S. Fish and Wildlife Service's Information for Planning and Conservation website (https://ecos.fws.gov/ipac). If you have any questions regarding this letter please contact Melany Cheeseman, Endangered Species Review Assistant, at (508) 389-6357.

Sincerely,

Everose Schlüter

Everose Schlüter, Ph.D.
Assistant Director

United States Department of the Interior

FISH AND WILDLIFE SERVICE
New England Ecological Services Field Office
70 Commercial Street, Suite 300
Concord, NH 03301-5094
Phone: (603) 223-2541 Fax: (603) 223-0104

In Reply Refer To:
Project Code: 2023-0029569
Project Name: Lawrence Rail Trail

January 03, 2023

Subject: List of threatened and endangered species that may occur in your proposed project location or may be affected by your proposed project

To Whom It May Concern:

Please review this letter each time you request an Official Species List, we will continue to update it with additional information and links to websites may change.

About Official Species Lists

The purpose of the Act is to provide a means whereby threatened and endangered species and the ecosystems upon which they depend may be conserved. Federal and non-Federal project proponents have responsibilities under the Act to consider effects on listed species.

The enclosed species list identifies threatened, endangered, proposed, and candidate species, as well as proposed and final designated critical habitat, that may occur within the boundary of your proposed project and/or may be affected by your proposed project. The species list fulfills the requirements of the U.S. Fish and Wildlife Service (Service) under section 7(c) of the Endangered Species Act (Act) of 1973, as amended (16 U.S.C. 1531 et seq.).

New information based on updated surveys, changes in the abundance and distribution of species, changed habitat conditions, or other factors could change this list. Please note that under 50 CFR 402.12(e) of the regulations implementing section 7 of the Act, the accuracy of this species list should be verified after 90 days. The Service recommends that verification be completed by visiting the ECOS-IPaC website at regular intervals during project planning and implementation for updates to species lists and information. An updated list may be requested by returning to an existing project's page in IPaC.

Endangered Species Act Project Review

Please visit the "**New England Field Office Endangered Species Project Review and Consultation**" website for step-by-step instructions on how to consider effects on listed

species and prepare and submit a project review package if necessary:

https://www.fws.gov/office/new-england-ecological-services/endangered-species-project-review

NOTE Please do not use the **Consultation Package Builder** tool in IPaC except in specific situations following coordination with our office. Please follow the project review guidance on our website instead and reference your **Project Code** in all correspondence.

Northern Long-eared Bat Update - Additionally, please note that on March 23, 2022, the Service published a proposal to reclassify the northern long-eared bat (NLEB) as endangered under the Endangered Species Act. The U.S. District Court for the District of Columbia has ordered the Service to complete a new final listing determination for the NLEB by November 2022 (Case 1:15-cv-00477, March 1, 2021). The bat, currently listed as threatened, faces extinction due to the range-wide impacts of white-nose syndrome (WNS), a deadly fungal disease affecting cave-dwelling bats across the continent. The proposed reclassification, if finalized, would remove the current 4(d) rule for the NLEB, as these rules may be applied only to threatened species. Depending on the type of effects a project has on NLEB, the change in the species' status may trigger the need to re-initiate consultation for any actions that are not completed and for which the Federal action agency retains discretion once the new listing determination becomes effective (anticipated to occur by December 30, 2022). If your project may result in incidental take of NLEB after the new listing goes into effect this will first need to be addressed in an updated consultation that includes an Incidental Take Statement. If your project may require re-initiation of consultation, please contact our office for additional guidance.

Additional Info About Section 7 of the Act
Under section 7(a)(2) of the Act and its implementing regulations (50 CFR 402 et seq.), Federal agencies are required to determine whether projects may affect threatened and endangered species and/or designated critical habitat. If a Federal agency, or its non-Federal representative, determines that listed species and/or designated critical habitat may be affected by the proposed project, the agency is required to consult with the Service pursuant to 50 CFR 402. In addition, the Federal agency also may need to consider proposed species and proposed critical habitat in the consultation. 50 CFR 402.14(c)(1) specifies the information required for consultation under the Act regardless of the format of the evaluation. More information on the regulations and procedures for section 7 consultation, including the role of permit or license applicants, can be found in the "Endangered Species Consultation Handbook" at:

https://www.fws.gov/service/section-7-consultations

In addition to consultation requirements under Section 7(a)(2) of the ESA, please note that under sections 7(a)(1) of the Act and its implementing regulations (50 CFR 402 et seq.), Federal agencies are required to utilize their authorities to carry out programs for the conservation of threatened and endangered species. Please contact NEFO if you would like more information.

Candidate species that appear on the enclosed species list have no current protections under the

ESA. The species' occurrence on an official species list does not convey a requirement to consider impacts to this species as you would a proposed, threatened, or endangered species. The ESA does not provide for interagency consultations on candidate species under section 7, however, the Service recommends that all project proponents incorporate measures into projects to benefit candidate species and their habitats wherever possible.

Migratory Birds

In addition to responsibilities to protect threatened and endangered species under the Endangered Species Act (ESA), there are additional responsibilities under the Migratory Bird Treaty Act (MBTA) and the Bald and Golden Eagle Protection Act (BGEPA) to protect native birds from project-related impacts. Any activity, intentional or unintentional, resulting in take of migratory birds, including eagles, is prohibited unless otherwise permitted by the U.S. Fish and Wildlife Service (50 C.F.R. Sec. 10.12 and 16 U.S.C. Sec. 668(a)). For more information regarding these Acts see:

https://www.fws.gov/program/migratory-bird-permit

https://www.fws.gov/library/collections/bald-and-golden-eagle-management

Please feel free to contact us at **newengland@fws.gov** with your **Project Code** in the subject line if you need more information or assistance regarding the potential impacts to federally proposed, listed, and candidate species and federally designated and proposed critical habitat.

Attachment(s): Official Species List

Attachment(s):

- Official Species List

Official Species List

This list is provided pursuant to Section 7 of the Endangered Species Act, and fulfills the requirement for Federal agencies to "request of the Secretary of the Interior information whether any species which is listed or proposed to be listed may be present in the area of a proposed action".

This species list is provided by:

New England Ecological Services Field Office
70 Commercial Street, Suite 300
Concord, NH 03301-5094
(603) 223-2541

Project Summary

Project Code: 2023-0029569
Project Name: Lawrence Rail Trail
Project Type: Recreation - Maintenance / Modification
Project Description: Converting a former railroad right of way into a public rail trail in the city of Lawrence, MA. The site is located in a primarily urban residential area with two water crossings.
Project Location:

Approximate location of the project can be viewed in Google Maps: https://www.google.com/maps/@42.707761,-71.17384976670886,14z

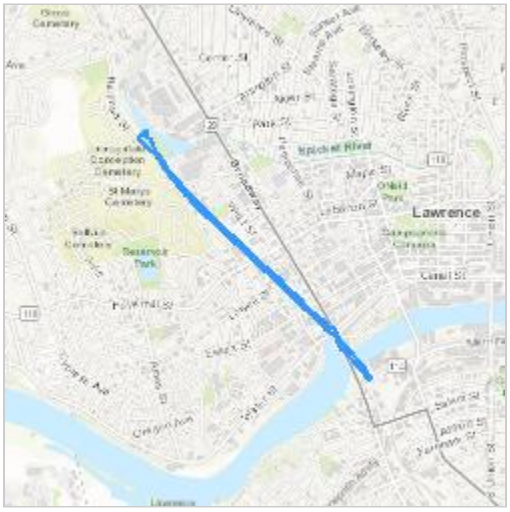

Counties: Essex County, Massachusetts

Endangered Species Act Species

There is a total of 2 threatened, endangered, or candidate species on this species list.

Species on this list should be considered in an effects analysis for your project and could include species that exist in another geographic area. For example, certain fish may appear on the species list because a project could affect downstream species.

IPaC does not display listed species or critical habitats under the sole jurisdiction of NOAA Fisheries[1], as USFWS does not have the authority to speak on behalf of NOAA and the Department of Commerce.

See the "Critical habitats" section below for those critical habitats that lie wholly or partially within your project area under this office's jurisdiction. Please contact the designated FWS office if you have questions.

---

1. NOAA Fisheries, also known as the National Marine Fisheries Service (NMFS), is an office of the National Oceanic and Atmospheric Administration within the Department of Commerce.

Mammals

NAME	STATUS
Northern Long-eared Bat *Myotis septentrionalis* No critical habitat has been designated for this species. Species profile: https://ecos.fws.gov/ecp/species/9045	Endangered

Insects

NAME	STATUS
Monarch Butterfly *Danaus plexippus* No critical habitat has been designated for this species. Species profile: https://ecos.fws.gov/ecp/species/9743	Candidate

Critical habitats

THERE ARE NO CRITICAL HABITATS WITHIN YOUR PROJECT AREA UNDER THIS OFFICE'S JURISDICTION.

IPaC User Contact Information

Agency: TRC
Name: Gregory Russo
Address: 650 Suffolk Street
Address Line 2: Suite 200
City: Lowell
State: MA
Zip: 01854
Email grusso@trccompanies.com
Phone: 9789415834

ATTACHMENT F – Stormwater Report

STORMWATER REPORT

LAWRENCE MANCHESTER RAIL CORRIDOR IMPROVEMENTS PROJECT

LAWRENCE, MASSACHUSETTS

Prepared for:

City of Lawrence, MA
200 Common Street
Lawrence, MA 01840

Prepared by:

TEC, Inc.
282 Merrimack Street
2nd Floor
Lawrence MA, 01843

October 19, 2022

Massachusetts Department of Environmental Protection
Bureau of Resource Protection - Wetlands Program

Checklist for Stormwater Report

A. Introduction

Important: When filling out forms on the computer, use only the tab key to move your cursor - do not use the return key.

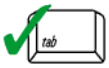

A Stormwater Report must be submitted with the Notice of Intent permit application to document compliance with the Stormwater Management Standards. The following checklist is NOT a substitute for the Stormwater Report (which should provide more substantive and detailed information) but is offered here as a tool to help the applicant organize their Stormwater Management documentation for their Report and for the reviewer to assess this information in a consistent format. As noted in the Checklist, the Stormwater Report must contain the engineering computations and supporting information set forth in Volume 3 of the Massachusetts Stormwater Handbook. The Stormwater Report must be prepared and certified by a Registered Professional Engineer (RPE) licensed in the Commonwealth.

The Stormwater Report must include:

- The Stormwater Checklist completed and stamped by a Registered Professional Engineer (see page 2) that certifies that the Stormwater Report contains all required submittals.[1] This Checklist is to be used as the cover for the completed Stormwater Report.
- Applicant/Project Name
- Project Address
- Name of Firm and Registered Professional Engineer that prepared the Report
- Long-Term Pollution Prevention Plan required by Standards 4-6
- Construction Period Pollution Prevention and Erosion and Sedimentation Control Plan required by Standard 8[2]
- Operation and Maintenance Plan required by Standard 9

In addition to all plans and supporting information, the Stormwater Report must include a brief narrative describing stormwater management practices, including environmentally sensitive site design and LID techniques, along with a diagram depicting runoff through the proposed BMP treatment train. Plans are required to show existing and proposed conditions, identify all wetland resource areas, NRCS soil types, critical areas, Land Uses with Higher Potential Pollutant Loads (LUHPPL), and any areas on the site where infiltration rate is greater than 2.4 inches per hour. The Plans shall identify the drainage areas for both existing and proposed conditions at a scale that enables verification of supporting calculations.

As noted in the Checklist, the Stormwater Management Report shall document compliance with each of the Stormwater Management Standards as provided in the Massachusetts Stormwater Handbook. The soils evaluation and calculations shall be done using the methodologies set forth in Volume 3 of the Massachusetts Stormwater Handbook.

To ensure that the Stormwater Report is complete, applicants are required to fill in the Stormwater Report Checklist by checking the box to indicate that the specified information has been included in the Stormwater Report. If any of the information specified in the checklist has not been submitted, the applicant must provide an explanation. The completed Stormwater Report Checklist and Certification must be submitted with the Stormwater Report.

[1] The Stormwater Report may also include the Illicit Discharge Compliance Statement required by Standard 10. If not included in the Stormwater Report, the Illicit Discharge Compliance Statement must be submitted prior to the discharge of stormwater runoff to the post-construction best management practices.

[2] For some complex projects, it may not be possible to include the Construction Period Erosion and Sedimentation Control Plan in the Stormwater Report. In that event, the issuing authority has the discretion to issue an Order of Conditions that approves the project and includes a condition requiring the proponent to submit the Construction Period Erosion and Sedimentation Control Plan before commencing any land disturbance activity on the site.

Massachusetts Department of Environmental Protection
Bureau of Resource Protection - Wetlands Program

Checklist for Stormwater Report

B. Stormwater Checklist and Certification

The following checklist is intended to serve as a guide for applicants as to the elements that ordinarily need to be addressed in a complete Stormwater Report. The checklist is also intended to provide conservation commissions and other reviewing authorities with a summary of the components necessary for a comprehensive Stormwater Report that addresses the ten Stormwater Standards.

Note: Because stormwater requirements vary from project to project, it is possible that a complete Stormwater Report may not include information on some of the subjects specified in the Checklist. If it is determined that a specific item does not apply to the project under review, please note that the item is not applicable (N.A.) and provide the reasons for that determination.

A complete checklist must include the Certification set forth below signed by the Registered Professional Engineer who prepared the Stormwater Report.

Registered Professional Engineer's Certification

I have reviewed the Stormwater Report, including the soil evaluation, computations, Long-term Pollution Prevention Plan, the Construction Period Erosion and Sedimentation Control Plan (if included), the Long-term Post-Construction Operation and Maintenance Plan, the Illicit Discharge Compliance Statement (if included) and the plans showing the stormwater management system, and have determined that they have been prepared in accordance with the requirements of the Stormwater Management Standards as further elaborated by the Massachusetts Stormwater Handbook. I have also determined that the information presented in the Stormwater Checklist is accurate and that the information presented in the Stormwater Report accurately reflects conditions at the site as of the date of this permit application.

Registered Professional Engineer Block and Signature

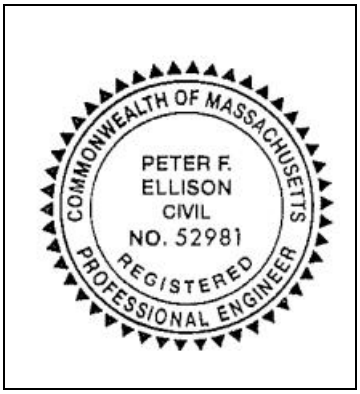

12-1-2022

Signature and Date

Checklist

Project Type: Is the application for new development, redevelopment, or a mix of new and redevelopment?

☐ New development

☒ Redevelopment

☐ Mix of New Development and Redevelopment

Massachusetts Department of Environmental Protection
Bureau of Resource Protection - Wetlands Program

Checklist for Stormwater Report

Checklist (continued)

LID Measures: Stormwater Standards require LID measures to be considered. Document what environmentally sensitive design and LID Techniques were considered during the planning and design of the project:

- ☐ No disturbance to any Wetland Resource Areas
- ☐ Site Design Practices (e.g. clustered development, reduced frontage setbacks)
- ☐ Reduced Impervious Area (Redevelopment Only)
- ☐ Minimizing disturbance to existing trees and shrubs
- ☐ LID Site Design Credit Requested:
  - ☐ Credit 1
  - ☐ Credit 2
  - ☐ Credit 3
- ☒ Use of “country drainage” versus curb and gutter conveyance and pipe
- ☒ Bioretention Cells (includes Rain Gardens)
- ☐ Constructed Stormwater Wetlands (includes Gravel Wetlands designs)
- ☐ Treebox Filter
- ☐ Water Quality Swale
- ☐ Grass Channel
- ☐ Green Roof
- ☒ Other (describe): Infiltration Basin, Vegetated filter strips

Standard 1: No New Untreated Discharges

- ☒ No new untreated discharges
- ☒ Outlets have been designed so there is no erosion or scour to wetlands and waters of the Commonwealth
- ☐ Supporting calculations specified in Volume 3 of the Massachusetts Stormwater Handbook included.

Massachusetts Department of Environmental Protection
Bureau of Resource Protection - Wetlands Program

Checklist for Stormwater Report

Checklist (continued)

Standard 2: Peak Rate Attenuation

☐ Standard 2 waiver requested because the project is located in land subject to coastal storm flowage and stormwater discharge is to a wetland subject to coastal flooding.

☒ Evaluation provided to determine whether off-site flooding increases during the 100-year 24-hour storm.

☐ Calculations provided to show that post-development peak discharge rates do not exceed pre-development rates for the 2-year and 10-year 24-hour storms. If evaluation shows that off-site flooding increases during the 100-year 24-hour storm, calculations are also provided to show that post-development peak discharge rates do not exceed pre-development rates for the 100-year 24-hour storm.

Standard 3: Recharge

☒ Soil Analysis provided.

☒ Required Recharge Volume calculation provided.

☐ Required Recharge volume reduced through use of the LID site Design Credits.

☒ Sizing the infiltration, BMPs is based on the following method: Check the method used.

☐ Static ☐ Simple Dynamic ☒ Dynamic Field[1]

☐ Runoff from all impervious areas at the site discharging to the infiltration BMP.

☒ Runoff from all impervious areas at the site is *not* discharging to the infiltration BMP and calculations are provided showing that the drainage area contributing runoff to the infiltration BMPs is sufficient to generate the required recharge volume.

☐ Recharge BMPs have been sized to infiltrate the Required Recharge Volume.

☒ Recharge BMPs have been sized to infiltrate the Required Recharge Volume *only* to the maximum extent practicable for the following reason:

- ☐ Site is comprised solely of C and D soils and/or bedrock at the land surface
- ☐ M.G.L. c. 21E sites pursuant to 310 CMR 40.0000
- ☐ Solid Waste Landfill pursuant to 310 CMR 19.000
- ☒ Project is otherwise subject to Stormwater Management Standards only to the maximum extent practicable.

☒ Calculations showing that the infiltration BMPs will drain in 72 hours are provided.

☐ Property includes a M.G.L. c. 21E site or a solid waste landfill and a mounding analysis is included.

[1] 80% TSS removal is required prior to discharge to infiltration BMP if Dynamic Field method is used.

Massachusetts Department of Environmental Protection
Bureau of Resource Protection - Wetlands Program

Checklist for Stormwater Report

Checklist (continued)

Standard 3: Recharge (continued)

☒ The infiltration BMP is used to attenuate peak flows during storms greater than or equal to the 10-year 24-hour storm and separation to seasonal high groundwater is less than 4 feet and a mounding analysis is provided.

☒ Documentation is provided showing that infiltration BMPs do not adversely impact nearby wetland resource areas.

Standard 4: Water Quality

The Long-Term Pollution Prevention Plan typically includes the following:

- Good housekeeping practices;
- Provisions for storing materials and waste products inside or under cover;
- Vehicle washing controls;
- Requirements for routine inspections and maintenance of stormwater BMPs;
- Spill prevention and response plans;
- Provisions for maintenance of lawns, gardens, and other landscaped areas;
- Requirements for storage and use of fertilizers, herbicides, and pesticides;
- Pet waste management provisions;
- Provisions for operation and management of septic systems;
- Provisions for solid waste management;
- Snow disposal and plowing plans relative to Wetland Resource Areas;
- Winter Road Salt and/or Sand Use and Storage restrictions;
- Street sweeping schedules;
- Provisions for prevention of illicit discharges to the stormwater management system;
- Documentation that Stormwater BMPs are designed to provide for shutdown and containment in the event of a spill or discharges to or near critical areas or from LUHPPL;
- Training for staff or personnel involved with implementing Long-Term Pollution Prevention Plan;
- List of Emergency contacts for implementing Long-Term Pollution Prevention Plan.

☒ A Long-Term Pollution Prevention Plan is attached to Stormwater Report and is included as an attachment to the Wetlands Notice of Intent.

☒ Treatment BMPs subject to the 44% TSS removal pretreatment requirement and the one inch rule for calculating the water quality volume are included, and discharge:

- ☐ is within the Zone II or Interim Wellhead Protection Area
- ☐ is near or to other critical areas
- ☒ is within soils with a rapid infiltration rate (greater than 2.4 inches per hour)
- ☐ involves runoff from land uses with higher potential pollutant loads.

☐ The Required Water Quality Volume is reduced through use of the LID site Design Credits.

☒ Calculations documenting that the treatment train meets the 80% TSS removal requirement and, if applicable, the 44% TSS removal pretreatment requirement, are provided.

Massachusetts Department of Environmental Protection
Bureau of Resource Protection - Wetlands Program

Checklist for Stormwater Report

Checklist (continued)

Standard 4: Water Quality (continued)

☒ The BMP is sized (and calculations provided) based on:

- ☒ The ½" or 1" Water Quality Volume or
- ☐ The equivalent flow rate associated with the Water Quality Volume and documentation is provided showing that the BMP treats the required water quality volume.

☐ The applicant proposes to use proprietary BMPs, and documentation supporting use of proprietary BMP and proposed TSS removal rate is provided. This documentation may be in the form of the propriety BMP checklist found in Volume 2, Chapter 4 of the Massachusetts Stormwater Handbook and submitting copies of the TARP Report, STEP Report, and/or other third party studies verifying performance of the proprietary BMPs.

☐ A TMDL exists that indicates a need to reduce pollutants other than TSS and documentation showing that the BMPs selected are consistent with the TMDL is provided.

Standard 5: Land Uses With Higher Potential Pollutant Loads (LUHPPLs)

☐ The NPDES Multi-Sector General Permit covers the land use and the Stormwater Pollution Prevention Plan (SWPPP) has been included with the Stormwater Report.

☐ The NPDES Multi-Sector General Permit covers the land use and the SWPPP will be submitted ***prior to*** the discharge of stormwater to the post-construction stormwater BMPs.

☐ The NPDES Multi-Sector General Permit does ***not*** cover the land use.

☐ LUHPPLs are located at the site and industry specific source control and pollution prevention measures have been proposed to reduce or eliminate the exposure of LUHPPLs to rain, snow, snow melt and runoff, and been included in the long term Pollution Prevention Plan.

☐ All exposure has been eliminated.

☐ All exposure has ***not*** been eliminated and all BMPs selected are on MassDEP LUHPPL list.

☐ The LUHPPL has the potential to generate runoff with moderate to higher concentrations of oil and grease (e.g. all parking lots with >1000 vehicle trips per day) and the treatment train includes an oil grit separator, a filtering bioretention area, a sand filter or equivalent.

Standard 6: Critical Areas

☐ The discharge is near or to a critical area and the treatment train includes only BMPs that MassDEP has approved for stormwater discharges to or near that particular class of critical area.

☐ Critical areas and BMPs are identified in the Stormwater Report.

Massachusetts Department of Environmental Protection
Bureau of Resource Protection - Wetlands Program

Checklist for Stormwater Report

Checklist (continued)

Standard 7: Redevelopments and Other Projects Subject to the Standards only to the maximum extent practicable

☒ The project is subject to the Stormwater Management Standards only to the maximum Extent Practicable as a:

- ☐ Limited Project
- ☐ Small Residential Projects: 5-9 single family houses or 5-9 units in a multi-family development provided there is no discharge that may potentially affect a critical area.
- ☐ Small Residential Projects: 2-4 single family houses or 2-4 units in a multi-family development with a discharge to a critical area
- ☐ Marina and/or boatyard provided the hull painting, service and maintenance areas are protected from exposure to rain, snow, snow melt and runoff
- ☒ Bike Path and/or Foot Path
- ☒ Redevelopment Project
- ☐ Redevelopment portion of mix of new and redevelopment.

☒ Certain standards are not fully met (Standard No. 1, 8, 9, and 10 must always be fully met) and an explanation of why these standards are not met is contained in the Stormwater Report.

☒ The project involves redevelopment and a description of all measures that have been taken to improve existing conditions is provided in the Stormwater Report. The redevelopment checklist found in Volume 2 Chapter 3 of the Massachusetts Stormwater Handbook may be used to document that the proposed stormwater management system (a) complies with Standards 2, 3 and the pretreatment and structural BMP requirements of Standards 4-6 to the maximum extent practicable and (b) improves existing conditions.

Standard 8: Construction Period Pollution Prevention and Erosion and Sedimentation Control

A Construction Period Pollution Prevention and Erosion and Sedimentation Control Plan must include the following information:

- Narrative;
- Construction Period Operation and Maintenance Plan;
- Names of Persons or Entity Responsible for Plan Compliance;
- Construction Period Pollution Prevention Measures;
- Erosion and Sedimentation Control Plan Drawings;
- Detail drawings and specifications for erosion control BMPs, including sizing calculations;
- Vegetation Planning;
- Site Development Plan;
- Construction Sequencing Plan;
- Sequencing of Erosion and Sedimentation Controls;
- Operation and Maintenance of Erosion and Sedimentation Controls;
- Inspection Schedule;
- Maintenance Schedule;
- Inspection and Maintenance Log Form.

☒ A Construction Period Pollution Prevention and Erosion and Sedimentation Control Plan containing the information set forth above has been included in the Stormwater Report.

Massachusetts Department of Environmental Protection
Bureau of Resource Protection - Wetlands Program

Checklist for Stormwater Report

Checklist (continued)

Standard 8: Construction Period Pollution Prevention and Erosion and Sedimentation Control (continued)

☐ The project is highly complex and information is included in the Stormwater Report that explains why it is not possible to submit the Construction Period Pollution Prevention and Erosion and Sedimentation Control Plan with the application. A Construction Period Pollution Prevention and Erosion and Sedimentation Control has ***not*** been included in the Stormwater Report but will be submitted ***before*** land disturbance begins.

☐ The project is ***not*** covered by a NPDES Construction General Permit.

☐ The project is covered by a NPDES Construction General Permit and a copy of the SWPPP is in the Stormwater Report.

☒ The project is covered by a NPDES Construction General Permit but no SWPPP been submitted. The SWPPP will be submitted BEFORE land disturbance begins.

Standard 9: Operation and Maintenance Plan

☒ The Post Construction Operation and Maintenance Plan is included in the Stormwater Report and includes the following information:

- ☒ Name of the stormwater management system owners;
- ☒ Party responsible for operation and maintenance;
- ☒ Schedule for implementation of routine and non-routine maintenance tasks;
- ☒ Plan showing the location of all stormwater BMPs maintenance access areas;
- ☐ Description and delineation of public safety features;
- ☒ Estimated operation and maintenance budget; and
- ☒ Operation and Maintenance Log Form.

☐ The responsible party is ***not*** the owner of the parcel where the BMP is located and the Stormwater Report includes the following submissions:

- ☐ A copy of the legal instrument (deed, homeowner's association, utility trust or other legal entity) that establishes the terms of and legal responsibility for the operation and maintenance of the project site stormwater BMPs;
- ☐ A plan and easement deed that allows site access for the legal entity to operate and maintain BMP functions.

Standard 10: Prohibition of Illicit Discharges

☒ The Long-Term Pollution Prevention Plan includes measures to prevent illicit discharges;

☒ An Illicit Discharge Compliance Statement is attached;

☐ NO Illicit Discharge Compliance Statement is attached but will be submitted ***prior to*** the discharge of any stormwater to post-construction BMPs.

Table of Contents

MassDEP Stormwater Checklist

List of Tables ii

List of Figures iii

Narrative 1

Introduction 1
Existing Conditions 2
Proposed Conditions 5
Methodology 8
Pre-Development Runoff 8
Post-Development Runoff 11
TSS Removal 16
Regulatory Compliance 16
Conclusion 22

Appendix

A Hydrologic Calculations
- Pre-Development HydroCAD Report
- Post-Development HydroCAD Report
- Mounding Analysis

B Water Quality Data
- TSS Removal Spreadsheet
- Basin Storage Tables
- Sediment Forebay Storage Tables
- Rip Rap Sizing Calculations

C Supporting Figures & Documents
- NRCS Soil Report
- Test Pit Geotechnical Data Report
- NOAA Atlas 14 PPFE

D Operations & Maintenance Plan
- Inspection and Maintenance Check List
- Inspection and Maintenance Log
- Inspection and Maintenance Estimated Budget

E Illicit Discharge Statement

F Construction Period Pollution Prevention Plan

List of Tables

Table No.	Title	Page
1	Peak Flow Summary	15

List of Figures

Figure No.	Title	Page
E-1 – E-15	Pre-Development Drainage Areas	23
P-1 – P-15	Post-Development Drainage Areas	24

1
Narrative

Introduction

The City of Lawrence, the Applicant, is proposing the construction of a rail trail bike and pedestrian path along the Lawrence Manchester Rail Corridor (LMRC) in Lawrence, MA. The proposed Project aims to reconstruct the corridor and railway bridges and construct rain gardens and an infiltration basin. The purpose of this project is to provide an alternate transportation route, connecting to the City of Methuen rail trail and the regional trail network.

TEC Inc. has prepared rail trail construction plans and associated stormwater management analysis for the proposed Project. The Project is located parallel to Broadway (Route 28) in Lawrence and will include the construction of approximately 1.4 miles of bike and pedestrian path improvements to allow connection to the City of Methuen Rail Trail. Due to the presence of wetlands adjacent to the site, a Notice of Intent (NOI) filing with the Lawrence Conservation Commission is to be submitted. This Stormwater Report will provide supplemental information pertinent to the NOI filing for the Project.

This drainage study was performed in order to assess the potential impacts of the proposed improvements and to provide measures to mitigate any impacts to resource areas near the Project. The limits of disturbance for this Project are mostly confined to the existing property of the railway, except where roadway intersections and crossings are necessary. Runoff from the existing site either sheet flows across the corridor and discharges untreated into surrounding resource areas or is caught in the existing drainage system along Broadway, Canal Street, Haverhill Street, Essex Street, or Manchester Street. The Project will provide a stormwater management system Best Management Practices (BMPs) design elements that will comply with the Massachusetts Stormwater Management Handbook. This analysis has been prepared to verify that the Project will result in improved stormwater collection and treatment at the site.

The proposed Stormwater Management Plan outlined in this report has been designed to meet the Stormwater Standards identified in the Massachusetts Department of Environmental Protection (DEP) Massachusetts Stormwater

Handbook and the City of Lawrence's Stormwater Bylaws to the maximum extent practicable. As outlined in the Massachusetts Stormwater Handbook, Volume 1 Chapter 1: *Stormwater Management Standards*, the standards shall apply to the maximum extent practicable for footpaths, bike paths and other paths for pedestrians and/or nonmotorized vehicle access. The Stormwater Management Design reduces peak runoff rates, reduces the risk of erosion and sedimentation, and improves stormwater runoff quality to the maximum extent practicable.

Existing Conditions

The existing railway has been divided into several subcatchment areas referenced in *Figures E-1* through *E-15* consisting of semipervious railway and vegetated landscaped areas along the shoulders of the railway. Located in various places along the corridor are several homeless encampments and large piles of litter and debris. The corridor varies in width from 50 to 80 feet and is 1.4 miles long. The topography of the LMCR varies between 0.5-20% from elevation 51 at the southeastern limit to 83 at the northwest limit of work. Utility poles and underground fiber-optic cables run the entire length of the corridor.

The first section of the trail from Merrimack Street to the Merrimack River includes the Merrimack Street sidewalk, a bridge over the South Canal, and 300' stretch of railway towards the Merrimack River. Crossing the South Canal is a 70' open deck rail bridge with timber ties. The topography across the stretch of railway over land is nearly level with a 3.0% cross slope down to the northeast. There is a single set of railroad tracks through this section. The shoulders of the railway has a small amount of ground cover, the only vegetation being large trees and bushes. Multiple used and abandoned homeless encampments are located within this section of the corridor; as well as an abundance of vegetative overgrowth, trash, and litter.

The next section of the corridor consists of the crossing the Merrimack River, the path from the bridge to the sidewalk on Broadway, and the Broadway/Water Street intersection. Crossing the Merrimack River is a 550' open deck rail bridge with timber ties. The single set of railroad tracks continues across the bridge. The undeveloped path leading to the Broadway sidewalk is 140' long. It's topography is nearly level along the length of the corridor with a 2.4% slope down towards the adjacent property. This section is overgrown with vegetation near the bridge and nearly bare or mulched near the sidewalk. The Broadway sidewalk has a 0.5% slope crossing the North Canal and leading towards the intersection. The intersection consists of a 4-way light controlling traffic from Canal Street and Water Street perpendicular to Broadway. The path, sidewalk, and intersection do not follow the original route of the tracks. There are no railroad tracks in this section of the corridor.

The next section of the corridor is a 715’ stretch of railway from Water Street to the intersection with Essex Street. There is a single set of tracks running through this section. The majority of this section has been taken over by neighboring properties. Various businesses along Broadway, Water Street, and Essex Street have encroached on the property, largely for vehicle parking and materials storage, rendering it impervious. The land left untouched by the encroachments is sparsely vegetated with small amounts of litter and debris. The topography of this section is nearly level with a cross slope of 2% down to the northeast. The corridor intersects through the 60’ width of Essex Street. The topography of Essex Street is 2.0% down to Broadway and relatively flat to the southwest.

The next section of corridor is the 750’ stretch from Essex Street to Lowell Street and a 50’ length underneath the Lowell Street bridge. The majority of this section contains 2 sets of railroad tracks. The first 280’ of the corridor is vegetated with well-maintained short grass cover and has one small property encroachment. The next 350’ of the corridor is covered with tall, unmaintained vegetation. The next 50’ before the Lowell Street bridge is a resource area, consisting of damp ground and vegetation overgrown past head height. The resource area continues under the Lowell Street bridge, with very little vegetation. The topography of this section from Essex Street to Lowell Street nearly flat along the length of the corridor, with steep slopes on either side near the Lowell Street bridge. Crossing Lowell Street is a 3 span timber beam bridge.

The next section of the corridor is the 775’ length from Lowell Street bridge to the Haverhill Street Intersection. This section contains another 600’ of the resource area and 2 sets of railroad tracks. The section of the resource area just northwest of the Lowell Street bridge is a low point in the corridor. The grade along the corridor averages 0.9% up to Haverhill Street and has a cross grade of 5.0% down to the northwest. Vegetation in the entirety of this section continues to be overgrown past head height and litter is scattered across the area. Roughly 200’ from the Haverhill Street intersection, just past the resource area, is the only homeless encampment in this section.

The next section of the corridor is from Haverhill Street to Bourgoin Square Park (West Street Park). This section is 1,230’ long with 2 sets of railroad tracks. The topography in this section averages 0.6% up to the Manchester Street intersection. Nearby the intersection, one homeless encampment is located against the property line with the Lawrence Family Development Charter School. Vegetation in this area is overgrown on the northeast side of the tracks and maintained on the southwest side of the tracks, likely by the adjacent property encroaching on the area. One section of the encroachment has left the property vegetated and the other has rendered the land impervious. Past the property encroachments (25-45 Railroad Street), vegetation becomes more overgrown and the amounts of trash and debris increases with proximity to the park.

The next section of the corridor is from Bourgoin Square Park to the Manchester Street intersection. This section is 1,150' long with two sets of tracks and an average slope of 0.7% up to Manchester Street. This section is elevated above the adjacent properties and has retaining walls on either side of the corridor. The northeast side of the corridor opens and slopes down to the park. Vegetation continues to be overgrown in most areas, and is sparse in areas surrounding the numerous homeless encampments on the northeast side of the tracks, particularly at the entrance to the park. Trash and litter in this section is abundant. Trash piles crowd the sides of the corridor in many areas. The retaining walls end just before Manchester Street and steep slopes create small paths down to the roadway. Previously, a bridge existed over Manchester Street. Currently the only remaining bridge elements are the stone retaining walls on either side of the street.

The last section of the corridor to be developed is from Manchester Street to the Methuen city line, about 1,400' long. This section does not have any existing railroad tracks and includes a second path that breaks off to connect to the Spicket River Greenway, approximately 240' away from Manchester Street. The corridor is overgrown with vegetation on the shoulders of the path and is trash and litter is scattered throughout. The topography of the gravel path remains relatively level from Manchester Street to the split in the path. The main path that connects to the City of Methuen rail trail has a topography of 0.6% sloping up to the Methuen city line. This path is much wider than the rest and is relatively clear of overgrown vegetation. The shoulders of the path are maintained and there is much less litter and trash as compared to the other areas. The path that breaks off remains level, then slopes gently at 0.6%, and then becomes steeper at 2.3% near the connection to the Spicket River Greenway.

The Project will incorporate the existing drainage infrastructure throughout the Project limits where possible. Stormwater from the site will eventually reach one of eleven existing Design Points, four of which are considered resource areas.

The site is comprised mostly of urban land soils, which is typical for a previously developed industrial site in Lawrence. The remaining portions of the site and surrounding areas are made up of Hinckley loamy sand, Hinkley and Windsor soils, and Udorthents, smoothed. These soils are characterized as well draining and are classified within Hydrologic Soil Group A. No hydrologic soil grouping is provided for urban soils, however given the loamy and sandy soil textures present & additional on-site soil analysis, Groups A and B are utilized in the stormwater analysis for the Project. Refer to Appendix C to review the full NRCS Soil Report for further information on soil groupings and characteristics on site.

During test pit excavations performed by TRC on July 29, 2019, and observed by TEC Inc., it was determined that the soil type was sand, sandy loam, and loam, which supports the NRCS Soils Report classification. Due to the large

majority of the soils from the NRCS Soils Report being Urban land (72.7%), the test pits and infiltration tests were used to more explicitly determine the Hydrologic Soil Groups A and B for soils in different zones of the Project site as outlined in the Massachusetts Stormwater Handbook Volume 3, Chapter 1: *Documenting Compliance*.

The infiltration tests performed by TRC on July 29, 2019 were used to determine infiltration rates of the soil. Using the "*Dynamic Field*" method as described in the methodology section, the rates used in the stormwater analysis in HydroCAD vary from 0.23 to 12.85 inches/hour. For more details on hydrologic conditions and stormwater modeling, see Appendix A.

Stormwater from the existing Rail Corridor sheet flows into the surrounding resource areas and adjacent properties or is caught in the closed drainage systems along one of four intersecting roads as depicted in *Figures E-1* though *E-15*.

Proposed Conditions

The proposed construction includes a 12' wide full depth pavement bike path between the South Canal and Merrimack River bridges and from Water Street to the City of Methuen. Along the majority of the central corridor, 5' wide full depth pavement walking path is proposed alongside and intersecting with the bike path. Concrete gathering areas, benches, and stadium seating is proposed throughout the trail. The Project will impact four existing bridges along the length of the corridor. One new bridge, a proposed elevated wood ramp, will be added 400' northwest of Essex Street and leading up to Lowell Street. The rail trail development will increase the total impervious area on site by 15,000 SF, just over 2%, compared to existing conditions. Nearly all of the stormwater collected from this 15,000 SF of impervious area will be mitigated on site. Proposed stormwater management along the central corridor section will include seven rain gardens, one infiltration basin, and conveyance swales.

Proposed changes to the first section from Merrimack Street to the Merrimack River are sidewalk repairs, the addition of an ADA accessible wheelchair ramp, a deck replacement to the South Canal bridge, and the construction of the bike path, concrete seating areas, and landscaped areas. The proposed grade will be similar to the existing conditions. All railroad tracks are proposed to be removed. There are no proposed stormwater BMPs between the waterways due to size constraints and an overall reduction in impervious surfaces in the proposed condition. The South Canal bridge is proposed to be a cast in place concrete deck bridge.

The second section will also consist of the construction of the bike path, concrete seating areas, and landscaped areas. The Merrimack River bridge is proposed to be a deck replacement with isolated steel repairs. All railroad tracks are proposed to be removed. The concrete sidewalk on Broadway will

be widened and the Broadway/Water Street intersection will be reconstructed, including sidewalk repair, crosswalk relocation, and pavement mill and overlay. The trail will break on the corner of Broadway and Canal Street and resume on the opposite side of the intersection, at the corner of Broadway and Water Street. There are no proposed stormwater BMPs between the bridge and the intersection due to space constraints.

The next section of the corridor, Water Street to Essex Street, proposes a bike path, landscaped areas, two concrete seating areas on either end of the section, and a rain garden (Basin 1P). The grade of the path is proposed to be raised slightly from existing conditions. All railroad tracks are proposed to be removed. Neighboring property encroachments are proposed to be eliminated, with the exception of buildings. Stormwater from this section will be mitigated with the construction of basin 1P. Basin 1P is a rain garden located near Station 30+00 is and is roughly 220' in length along the bike path and 2' deep. A 172' 6" underdrain is proposed to run under this basin. This basin is proposed to have an outlet control structure connected to proposed closed drainage to tie into Broadway via 12" reinforced concrete pipes. The Essex Street intersection will be reconstructed, including sidewalk construction, crosswalk relocation, and pavement mill and overlay.

The next section, from Essex Street to Lowell Street, proposes a bike path, landscaped areas, a concrete seating area, an infiltration basin (Basin 2P), and a ramp up to Lowell Street. The proposed grade of the path will be very similar to existing conditions. Some railroad tracks will remain northeast of the bike path. The Lowell street bridge is to be fully replaced with a prefabricated arch. A wood deck ramp is proposed to connect the bike path to the Lowell Street bridge. Stormwater from this section will be mitigated with the construction of basin 2P. Basin 2P is an infiltration basin located near Station 37+00. This basin is roughly 310' in length along the bike path and 1' deep in the main collection area. The shallower section of the basin is 0.5' deep. Basin 2P will not have an underdrain due a shallow groundwater depth (2.75' below the bottom of basin). This basin is connected to a 1000' long and 0.5' deep swale that follows the northeastern side of the bike path. Impacts to the resource areas have been kept at a minimum.

The next section, Lowell Street to Haverhill Street, poses a bike path, landscaped areas, a concrete seating area, and a conveyance swale. Some railroad tracks will remain. The proposed grade of the path will be similar to existing conditions. This section will contain part of the conveyance swale leading to Basin 2P. Disturbances to the resource are have been kept at a minimum. The Haverhill Street intersection will be reconstructed, including sidewalk construction, crosswalk relocation, and pavement mill and overlay.

The next section, Haverhill Street to Bourgoin Square Park (West Street Park), poses a bike path, walking path, landscaped areas, concrete seating areas, path connection points, and rain gardens. The majority of the railroad tracks will be removed. On average, the bike path will be within 1' of existing

grade and the walking paths will be raised up to 3′ above existing grade. Stormwater from this section will be mitigated with the construction of basins 3P, 4P, 5AP, and 5BP (all of which are rain gardens). Basin 3P is located near Station 53+00. This basin is 230′ in length between the bike path and the pedestrian path and is 1′ deep. Basin 3P has a 127′ long 6″ underdrain. Basin 4P is a rain garden located near Station 56+00. This basin is 95′ in length along the bike path and is 1′ deep. This basin is connected to a 120′ long and 0.5′ deep swale via a 30′ long 12″ RCP culvert underneath the access road to Railroad Street. This 120′ long swale shares the same properties as the basin, with subsurface soil materials matching rain garden specifications. Basin 4P has an 83′ long 6″ underdrain. Basin 5AP and 5BP are two rain gardens connected with a level 28′ long 12″ RCP culvert. Both sections of Basin 5 are 1′ deep and are a combined 200′ in length, located between the bike path and pedestrian path. 5AP has an 80′ long 6″ underdrain and 5BP has a 96′ long 6″ underdrain. Basin 5 is connected to upstream Basin 6P with a 105′ long 12″ RCP culvert.

The next section, Bourgoin Square Park to Manchester Street, poses a bike path, walking path, landscaped areas, concrete seating areas, and rain gardens (Basins 6P, 7P, and 8P). All railroad tracks will be removed from this section. The grade of the path is proposed to start 1′ higher than existing, and raise to 4′ higher than existing at the proposed Manchester Street bridge. The Manchester street bridge repair will consist of a superstructure replacement. The proposed bridge will be a through-girder with a concrete deck. Stormwater from this section will be mitigated with the construction of basins 6P, 7P, and 8P. Basin 6P is a rain garden located near Station 62+00. This basin is 1′ deep and 58′ in length between the bike and pedestrian paths. Basin 6P is proposed to have an outlet control structure with a 12″ RCP culvert outlet to Basin 5P and a 41′ long 6″ underdrain. Basin 7P is a rain garden located near Station 64+00. This basin is 0.5′ deep and is fed by a swale located between the bike and pedestrian paths. The total length of the basin and swale is 310′, with a 102′ long 6″ underdrain. Basin 8P is a rain garden located near Station 71+00. This basin is 0.75′ deep and 140′ in length along the bike path. Basin 8P is proposed to have a 73″ long 6″ underdrain.

Basins 3P through 8P are intended to work a linear fashion, with overflow from the highest point (Basin 8P) leading to each following basin until ending at Basin 3P. Where outlet control structures are not proposed, overflow will occur via sheet flow over the rim of the basin and along the proposed bike path and into the following basin. This "overflow" along the path will only occur during the 25 & 100 year storms, with peak elevations that should not peak above the opposite side of the bike path.

The last section, Manchester Street Bridge to the Methuen Line & the connection to the Spicket River Greenway, poses a bike path, a wooden safety rail, and concrete stadium seating. Given half of this section (along the majority of the northeast side) is within an existing AUL, infiltration BMP's are

not proposed as part of this section. Given the project is a proposed redevelopment and limited space in the area, no stormwater BMP's are proposed to minimize any further disturbance within or near the AUL.

The soils on site are considered well-draining and will help promote the infiltration of stormwater through these systems. The goal is to attenuate peak flows that will naturally increase due to the added impervious area on site.

Overall, proposed improvements will promote effective stormwater management and mitigate risks to resources and issues associated. The following sections will describe the analysis of how stormwater will be managed on site.

Methodology

The Stormwater Management Plan, which will be implemented as part of this project, will provide adequate collection, management, and treatment of the stormwater runoff.

Existing and proposed hydrologic conditions were analyzed using HydroCAD, an SCS TR-20 based program, to calculate existing and proposed peak discharge rates. This method takes into account existing and proposed pervious and impervious areas including soil types and hydrologic classifications. The 2-, 10-, 25- and 100-year storm frequencies were used in the analysis in accordance with the MassDEP and the City of Lawrence's requirements.

Infiltration rates used in the HydroCAD analysis comply with the "*Dynamic Field"* method according to the regulations outlined in the Massachusetts Stormwater Handbook Volume 3, Chapter 1: *Documenting Compliance*. Infiltration rate was determined to be 50% of the actual in-situ saturated hydraulic conductivity rate as measured by the infiltrometer.

The "Regulatory Compliance" portion of this report addresses the MassDEP Stormwater Management Performance Standards under the Wetlands Protection Act.

Pre-Development Runoff

The existing site contains approximately 469,738 SF of pervious area consisting of grassed and open space areas, as well as 195,455 SF of impervious area consisting of railway gravel, paved roadway areas, bridges, and neighboring property encroachments.

Existing stormwater runoff travels to eleven Design Points (DP), four of which are delineated as Resource Areas. DP-A is the Merrimack River and North Canal resource area. DP-B is the closed drainage system on Broadway, which discharges to the Merrimack River. DP-C is the closed drainage on Essex Street. DP-D is the resource area near station 40+00 on the northeast side of the existing tracks and DP-E is the same resource area on the southwestern side of the existing tracks. DP-F is the closed drainage on Haverhill Street and DP-G are the properties adjacent to the southwestern side of the corridor near station 58+00. DP-H is closed drainage along West Street and DP-I is the adjacent properties between the corridor and May Street near Station 69+00. DP-J is the Manchester Street and May Street intersection and DP-K is the Spicket River.

The *Pre-Development Drainage Areas* are depicted in *Figures E-1* through *E-15* of this report. This figure presents the delineation of the existing subcatchment areas and the Design Point. There are 13 existing subcatchment areas which are outlined below:

Existing Subcatchment Area A1 (EX-A1) is comprised of 24,720 SF of pervious land area consisting of forest and grassed and open space areas, and 33,512 SF of impervious area consisting of sidewalk, bridges, railway gravel, retaining walls, and a paved driveway. Stormwater that falls onto the South Canal and Merrimack River bridges will flow through the timber deck directly into the waterways. Stormwater on land within EX-A1 currently sheet flows over land and into the South Canal and Merrimack River, labelled as DP-A.

Existing Subcatchment Area B1 (EX-B1) is comprised of 204 SF of pervious land area consisting of grassed, open space landscaping, and 20,018 SF of impervious paved roadway and sidewalk. Stormwater from this subcatchment currently sheet flows to DP-B, closed drainage in the Broadway/Canal Street intersection.

Existing Subcatchment Area B2 (EX-B2) is comprised of 17,180 SF of pervious land area consisting of grassed open space, and 37,736 SF of impervious railway gravel and paved neighboring property encroachments. Stormwater from this subcatchment currently sheet flows into DP-B.

Existing Subcatchment Area C1 (EX-C1) is comprised of 40 SF of pervious land area consisting of grassed open space and 16,171 SF of impervious paved roadway and sidewalk. Stormwater from this subcatchment currently sheet flows to DP-D, closed drainage on Essex Street.

Existing Subcatchment Area D1 (EX-D1) is comprised of 80,039 SF of pervious land area consisting of grassed open space and 17,781 SF of impervious gravel railway, bridge supports, and paved neighboring property encroachments. Stormwater from this subcatchment currently sheet flows to DP-D, the resource area on the northeast side of the tracks inside EX-D1.

Stormwater on the Lowell Street bridge above the corridor drains onto Lowell street and does not affect the corridor.

Existing Subcatchment Area E1 (EX-E1) is comprised of 33,654 SF of pervious land area consisting of grassed open space and 76 SF of impervious bridge supports. Stormwater from this subcatchment currently sheet flows to DP-E, the resource area on the southwest side of the tracks in EX-E1. Stormwater on the Lowell Street bridge above the corridor drains onto Lowell street and does not affect the corridor.

Existing Subcatchment Area F1 (EX-F1) is comprised of 76,325 SF of pervious land area consisting of grassed open space and 20,801 SF of impervious paved roadway, sidewalk, railway gravel, and neighboring property encroachments. Stormwater from this subcatchment currently sheet flows to DP-F, closed drainage on Haverhill Street.

Existing Subcatchment Area G1 (EX-G1) is comprised of 8,534 SF of pervious land area consisting of grassed open space and 1,922 SF of impervious railway gravel and neighboring property encroachments. Stormwater from this subcatchment currently sheet flows offsite to DP-G, neighboring properties on Railroad Street, southwest of station 58+00.

Existing Subcatchment Area H1 (EX-H1) is comprised of 64,584 SF of pervious land area consisting of grassed open space and 14,073 SF of impervious railway gravel, concrete piers, and neighboring property encroachments. Stormwater from this subcatchment currently sheet flows offsite to DP-H, West Street drainage.

Existing Subcatchment Area I1 (EX-I1) is comprised of 3,259 SF of pervious land area consisting of grassed open space and 0 SF of impervious area. Stormwater from this subcatchment currently sheet flows to offsite DP-I, adjacent properties to the southwest near station 69+00.

Existing Subcatchment Area J1 (EX-J1) is comprised of 21,462 SF of pervious land area consisting of grassed open space and 5,950 SF of impervious railway gravel and neighboring property encroachments. Stormwater from this subcatchment currently sheet flows off the southwestern side of the site or directly onto Manchester Street to DP-J, the Manchester Street and May Street intersection. With the absence of the Manchester Street bridge, stormwater falls directly onto Manchester Street and sheet flows towards the intersection.

Existing Subcatchment Area K2 (EX-J2) is comprised of 10,314 SF of pervious land area consisting of grassed open space and 1,616 SF of impervious railway gravel. Stormwater from this subcatchment currently sheet flows off the northeastern side of the site to DP-J, the Manchester Street intersection.

Existing Subcatchment Area L1 (EX-K1) is comprised of 129,424 SF of pervious land area consisting of grassed open space & forested areas and 25,798 SF of impervious railway gravel. Stormwater from this subcatchment currently sheet flows to DP-K, the Spicket River.

Post-Development Runoff

The proposed site will contain approximately 454,803 SF of pervious area consisting of landscaped grassed areas, as well as 210,390 SF of impervious area consisting of paved pedestrian path and roadway, bridges, and concrete seating areas, as well as remaining railway gravel and property encroachments. The proposed site increase impervious areas by 2.25 percent.

The proposed stormwater management system is designed to mitigate the effects of the proposed development by reducing the peak rates of runoff as compared to the existing conditions to the maximum extent practicable. In the proposed conditions analysis, the same design points identified and analyzed under the existing conditions were considered. The post-development subcatchment areas are identified in *Figures P-1* through *P-15*, *Post Development Drainage Areas.*

Proposed Subcatchment Area A1 (PR-A1) is comprised of 24,468 SF of pervious land area consisting of grassed and landscaped open space areas, and 32,708 SF of impervious area consisting of pedestrian path, bridges, concrete seating areas, and retaining walls. Stormwater on the South Canal bridge will be kept on the bridge using curb, pitch to the northeast corner, and flow onto the path. Stormwater on land within PR-A1 will sheet flow over land into the South Canal and Merrimack River, labelled as DP-A. Stormwater on the Merrimack River bridge will discharge directly into the river through scuppers.

Proposed Subcatchment Area B1 (PR-B1) is comprised of 204 SF of pervious land area consisting of grassed and landscaped open space landscaping, and 21,088 SF of impervious paved roadway and sidewalk. Stormwater from this subcatchment will sheet flow into DP-B, closed drainage in the Broadway/Canal Street intersection that discharges to the Merrimack River.

Proposed Subcatchment Area B2 (PR-B2) is comprised of 14,824 SF of pervious land area consisting of grassed and landscaped open space, and 10,366 SF of impervious pedestrian path, concrete seating areas, and neighboring property encroachments. Stormwater from this subcatchment will sheet flow into rain garden 1P, and overflow through an outlet control structure with a 12” RCP pipe connecting to a proposed drainage manhole located on the bike path. This drainage will connect to the closed drainage system on Broadway, DP-B.

Proposed Subcatchment Area B3 (PR-B3) is comprised of 19,443 SF of pervious land area consisting of grassed and landscaped open space, and 10,082 SF of neighboring property encroachments. Stormwater from this subcatchment will sheet flow off the northeastern side of the corridor to DP-B.

Proposed Subcatchment Area C1 (PR-C1) is comprised of 2,306 SF of pervious land area consisting of grassed and landscaped open space and 18,181 SF of impervious paved roadway, sidewalk, and concrete seating area. Stormwater from this subcatchment will sheet flow to DP-C, closed drainage on Essex Street.

Proposed Subcatchment Area D1 (PR-D1) is comprised of 67,573 SF of pervious land area consisting of grassed and landscaped open space and 26,335 SF of impervious pedestrian path, gravel railway, and bridge supports. Stormwater from this subcatchment will sheet flow directly into infiltration basin 2P or into its swale, and overflow to DP-D, the resource area on the northeast side of the tracks in PR-D1. Watertight joints on the Lowell Street bridge will keep stormwater from the bridge on Lowell Street and will not impact the corridor.

Proposed Subcatchment Area E1 (PR-E1) is comprised of 33,189 SF of pervious land area consisting of grassed and landscaped open space and 541 SF of impervious bridge supports. Stormwater on the wood deck ramp is expected to fall through the spacing between the boards to the pervious area beneath the ramp. Therefore only the ramp supports are included as impervious area. Stormwater from this subcatchment will sheet flow into DP-E, the resource area on the southwest side of the tracks in PR-E1. Watertight joints on the Lowell Street bridge will keep stormwater from the bridge on Lowell Street and will not impact the corridor.

Proposed Subcatchment Area F1 (PR-F1) is comprised of 5,957 SF of pervious land area consisting of grassed open space and 9,477 SF of impervious paved roadway, sidewalk, and pedestrian path. Stormwater from this subcatchment will sheet flow to DP-F, closed drainage on Haverhill Street.

Proposed Subcatchment Area F2 (PR-F2) is comprised of 27,588 SF of pervious land area consisting of grassed and landscaped open space and 7,921 SF of impervious pedestrian path. Stormwater from this subcatchment will sheet flow into rain garden 3P, and overflow to DP-F, closed drainage on Haverhill Street.

Proposed Subcatchment Area F3 (PR-F3) is comprised of 7,695 SF of pervious land area consisting of grassed and landscaped open space and 4,464 SF of impervious pedestrian path. Stormwater from this subcatchment will sheet flow into the swale and enter rain garden 4P via a 12” RCP or sheet flow directly into rain garden 4P. Stormwater from this subcatchment will

overflow first to rain garden 3P, then to DP-F, closed drainage on Haverhill Street.

Proposed Subcatchment Area F4 (PR-F4) is comprised of 8,240 SF of pervious land area consisting of grassed and landscaped open space and 6,412 SF of impervious pedestrian path. Stormwater from this subcatchment will sheet flow into rain garden 5AP or 5BP, connected by means of a 12" RCP culvert. Stormwater from this subcatchment will overflow first to rain garden 4P, then rain garden 3P, and lastly to DP-F, closed drainage on Haverhill Street.

Proposed Subcatchment Area F5 (PR-F5) is comprised of 6,667 SF of pervious land area consisting of grassed and landscaped open space, and 3,972 SF of impervious pedestrian path. Stormwater from this subcatchment will sheet flow into rain garden 6P, and overflow first to rain garden 5P through a 12" RCP culvert, and continue to overflow down the basin chain to DP-F, closed drainage on Haverhill Street.

Proposed Subcatchment Area F6 (PR-F6) is comprised of 19,270 SF of pervious land area consisting of grassed and landscaped open space, and 13,311 SF of impervious pedestrian path. Stormwater from this subcatchment will sheet flow into rain garden 7P, and first overflow to rain garden 6P, then overflow down the basin chain to DP-F, towards the closed drainage system on Haverhill Street.

Proposed Subcatchment Area F7 (PR-F7) is comprised of 5,119 SF of pervious land area consisting of grassed and landscaped open space, and 4,727 SF of impervious pedestrian path. Stormwater from this subcatchment will sheet flow into rain garden 8P, and overflow first to raingarden 7P, then overflow down the basin chain to DP-F, closed drainage on Haverhill Street.

Proposed Subcatchment Area G1 (PR-G1) is comprised of 9,759 SF of pervious land areas consisting of grassed and landscaped open space and 0 SF of impervious area. Stormwater from this subcatchment will sheet flow off the southwest side of the corridor onto the properties on Railroad Street.

Proposed Subcatchment Area H1 (PR-H1) is comprised of 16,666 SF of pervious land area consisting of grassed and landscaped open space, and 1,798 SF of impervious railway gravel. Stormwater from this subcatchment will sheet flow offsite to DP-H, West Street drainage.

Proposed Subcatchment Area H2 (PR-H2) is comprised of 19,380 SF of pervious land area consisting of grassed and landscaped open space, and 1,943 SF of impervious concrete stadium seating and neighboring property encroachments. Stormwater from this subcatchment will sheet flow down the northeast shoulder of the path to DP-H, West Street drainage.

Proposed Subcatchment Area I1 (PR-I1) is comprised of 12,506 SF of pervious land area consisting of grassed and landscaped open space, and 191 SF of impervious neighboring property encroachment. Stormwater from this subcatchment will sheet flow into adjacent properties on May Street (DP-I).

Proposed Subcatchment Area J1 (PR-J1) is comprised of 4,779 SF of pervious land area consisting of grassed and landscaped open space, and 153 SF of impervious neighboring property encroachment and retaining wall. Stormwater from this subcatchment will sheet flow off the southwestern side of the corridor to DP-J, the Manchester Street and May Street intersection.

Proposed Subcatchment Area J2 (PR-J2) is comprised of 9,783 SF of pervious land area consisting of grassed and landscaped open space, and 3,128 SF of impervious pedestrian path and retaining walls. Stormwater from this subcatchment will sheet flow off the northeastern side of the corridor, through adjacent properties, and down Manchester Street to DP-J, the Manchester Street and May Street intersection.

Proposed Subcatchment Area J3 (PR-J3) is comprised of 13,410 SF of pervious land area consisting of grassed and landscaped open space, and 1,950 SF of the Manchester Street bridge and a retaining wall. Stormwater from this subcatchment will sheet flow off the southwestern side of the corridor and down Currant Hill Road to DP-J, the Manchester Street and May Street intersection. Stormwater on the Manchester Street bridge will pitch back down the corridor, to the southeast.

Proposed Subcatchment Area K1 (PR-K1) is comprised of 125,977 SF of pervious land area consisting of grassed and landscaped open space and forested areas, and 31,642 SF of impervious pedestrian path, concrete stadium seating, and retaining walls. Stormwater from this subcatchment will sheet flow to the north end of the corridor to DP-K, the Spicket River.

For the bridges without watertight joints, it is possible that some stormwater will flow through the joints and directly the to the waterway below. The scuppers on the Merrimack River bridge will also discharge stormwater to the river without overland flow. This stormwater will discharge directly into the water without pretreatment, matching to existing conditions. Given that the corridor will be used only for pedestrian travel, it is unlikely that TSS buildup will occur, therefore no pretreatment is proposed.

Table 1 (Peak Flow Summary)

	ACRES		CFS							
	PRE AREA	POST AREA	PRE 2 YR	POST 2 YR	PRE 10 YR	POST 10 YR	PRE 25 YR	POST 25 YR	PRE 100 YR	POST 100 YR
DP-A	1.337	1.313	2.64	2.71	5.13	5.17	6.71	6.72	9.14	9.1
DP-B	1.725	1.745	4.34	2.46	7.56	4.62	9.57	6.12	12.64	8.3
DP-C	0.372	0.47	1.12	1.34	1.79	2.2	2.21	2.74	2.86	3.57
DP-D	2.246	2.156	2.43	0	6.05	0	8.54	0	12.52	0
DP-E	0.774	0.774	0.57	0.57	1.69	1.69	2.5	2.5	3.81	3.81
DP-F	2.23	3.003	0.43	0.52	2.74	1.14	4.62	1.55	7.91	3.26
DP-G	0.24	0.224	0.04	0	0.27	0.09	0.47	0.22	0.82	0.48
DP-H	1.806	0.913	0.23	0.06	1.89	0.68	3.34	1.34	5.9	2.53
DP-I	0.075	0.291	0	0	0.03	0.14	0.07	0.32	0.16	0.67
DP-J	0.903	0.762	0.13	0.1	1.01	0.79	1.75	1.39	3.05	2.46
DP-K	3.563	3.618	0.45	0.69	3.74	4.44	6.59	7.5	11.64	12.84

According to the HydroCAD results, the proposed project decreases peak runoff rates from the existing conditions for all storm events for Design Points B, D, E, G, H, and J. These design points account for 43% of the land in the project area.

The peak runoff rates for Design Point A are increased in the 2-, 10-, and 25-Year storm events by an insignificant factor. This is due to grading changes from pre to post, and should not have a significant effect on the surrounding area.

The proposed project increases peak runoff rates for all storm events for Design Points C. The increase seen at Design Point C is due to an increase in impervious area leading towards the roadway from a new seating area. The existing drainage system on Essex Street should be capable of handling this minor increase.

The peak runoff rate for Design Point F is only increased in the 2-Year storm event. This is due to the revised grading around the intersection with Haverhill Street, causing additional impervious area lead towards the roadway. The existing drainage system along the roadway should be capable of handling this minor increase.

The peak runoff rates for Design Point I are increased for the 10-Year, 25-Year, and 100-Year storm events. This increase is due to grading alterations causing additional land to be graded towards this design point. Given how spread out the contributing area is over this section & the minor increase in peak flows, offsite flooding is not anticipated for this area in all design storms.

The proposed project increases peak runoff rates for all storm events for Design Point K. The increase at Design Point K is relatively insignificant given the overall land area contributing to this point. Adding additional stormwater BMP's in this area would further disturb the existing AUL for minimal benefit in reduction in peak flows.

Overall, the current design meets state and local regulations to the maximum extent practicable.

TSS Removal

Given that the corridor will be used only for pedestrian travel, it is unlikely that significant TSS buildup will occur. 7 rain gardens and one infiltration basin will be used to provide TSS removal. TSS removal for Basins 1P, 3P, 4P, 5AP, 5BP, 6P, and 7P is calculated to be 90% as bioretention areas. The shoulder of the pathway grading down to the basins will be lined with pea stone diaphragms and vegetated filter strips. Basin 2P is the infiltration basin combined with two sediment forebays for pretreatment. This basin, combined with the necessary pretreatment, will provide up to 80% TSS removal. proposed to have 2 sediment forebays to provide pretreatment. This basin will also have a pea stone diaphragm and a vegetated filter strip for the section of path not adjacent the two drainage swales. Given the limited width of the corridor & the proposed use being a bike/pedestrian path, the Massachusetts Stormwater Standards are only applicable to the maximum extent practicable.

Regulatory Compliance

The MassDEP Stormwater Management Policy prescribes ten performance standards for site redevelopment projects. The proposed project has been designed in accordance with these standards. Compliance with the standards is outlined below.

1. *No new stormwater conveyances may discharge untreated stormwater directly to or cause erosion in wetlands or waters of the Commonwealth*.

There are no new untreated discharges. The existing drainage patterns will continue as they currently exist today with the addition of rain gardens and the infiltration basin.

2. *Stormwater management systems must be designed so that post-development peak discharge rates do not exceed pre-development peak discharge rates*.

As summarized in Table 1 Peak Flow Summary, the Project decreases peak discharge rates to the maximum extent practicable. The HydroCAD analysis and output can be found in Appendix A, *Hydrology Calculations*.

3. *Loss of annual recharge to groundwater should be minimized through the use of infiltration measures where feasible*.

The proposed stormwater management utilizes rain gardens and an infiltration basin to provide groundwater recharge. The required recharge volume is determined based on the additional impervious area associated with the proposed improvements and the classification of the soils on site (Hydrologic Soil Types A and B).

Calculation Method "Dynamic Field" (Mass DEP Stormwater Handbook)

Rv = F x impervious area *Equation (1)*
Rv = *Required Recharge Volume*, expressed in Ft^3, cubic yards, or acre-feet
F = Target Depth Factor associated with each Hydrologic Soil Group
Impervious Area = pavement and rooftop area on site

Recharge Target Depth by Hydrologic Soil Group

NRCS HYDROLOGIC SOIL TYPE	APPROX. SOIL TEXTURE	TARGET DEPTH FACTOR (F)
A	**sand**	**0.6-inch**
B	loam	0.35-inch
C	silty loam	0.25-inch
D	clay	0.1-inch

Post Impervious Area (HSG A) = 112,177 SF
Post Impervious Area (HSG B) = 98,213 SF

Rv = (0.60-inch x 112,177 SF) + (0.35-inch x 98,213 SF) = 8,454 CF
Rv = cubic feet of Required Recharge Volume

Total Pond Storage = 1,316 CF +3,227 CF +2,045 CF +1,300 CF +1,161 CF +145 CF + 1,823 +922 CF
Total Pond Storage = 11,939 cubic feet

Total Proposed Rv = 11,939 CF > 8,454 CF

The volume of water infiltrated meets the requirements of Standard 3.

Confirm that Ponds will empty within 72 hours:

1P Volume of Storage Below Outlet = 1,316 CF
Infiltration Rate (HSG-B, TP-6) = 0.23"/hr
Footprint Area of Pond 1P =975 SF
Time to Drain = 1,316 CF /(0.23"/hr x 975 SF) =70.42 hrs
= 70.42 hr < 72 hr

2P Volume of Storage Below Outlet = 3,227 CF
Infiltration Rate (HSG B, TP-5) = 12.85"/hr
Footprint Area of Pond 2P = 1,222 SF
Time to Drain = 3,358 CF /(12.85"/hr x 1,377 SF) = 2.47 hrs
= 2.47 hr < 72 hr

3P Volume of Storage Below Outlet = 2,045 CF
Infiltration Rate (HSG A, TP-4) = 0.70"/hr
Footprint Area of Pond 3P = 501 SF
Time to Drain = 2,045 CF /(0.70"/hr x 501 SF) = 69.97 hrs
= 69.97 hr > 72 hr

4P Volume of Storage Below Outlet = 1,300 CF
Infiltration Rate (HSG A, TP-3 & TP-4) = 1.90"/hr
Footprint Area of Pond 4P = 294 SF
Time to Drain = 1,300 CF /(1.90"/hr x 294 SF) = 27.93 hrs
= 27.93 hr < 72 hr

5P Volume of Storage Below Outlet = 1,161 CF
Infiltration Rate (HSG A, TP-3) = 3.10"/hr
Footprint Area of Pond 5P = 566 SF
Time to Drain = 1,161 CF /(3.10"/hr x 566 SF) = 7.94 hrs
= 7.94 hr < 72 hr

6P Volume of Storage Below Outlet = 145 CF
Infiltration Rate (HSG A, TP-3) = 3.10"/hr
Footprint Area of Pond 6P = 75 SF
Time to Drain =145 CF /(3.10"/hr x 75 SF) = 7.48 hrs
= 7.48 hr < 72 hr

7P Volume of Storage Below Outlet = 1,823 CF
Infiltration Rate (HSG A, TP-3) = 3.10"/hr
Footprint Area of Pond 6P = 1,247 SF
Time to Drain =1,823 CF /(3.10"/hr x 1,247 SF) = 5.66 hrs
= 5.66 hr < 72 hr

8P Volume of Storage Below Outlet = 922 CF
Infiltration Rate (HSG A, TP-1) = 1.20"/hr
Footprint Area of Pond 8P = 216 SF
Time to Drain = 922 CF /(1.20"/hr x 216 SF) = 42.69 hrs
= 42.69 hr < 72 hr

All basins infiltrate within 72 hours.

Test Pits

The Massachusetts Stormwater Standards require that test pits be conducted at the specific locations of the proposed BMPs. Test pit excavation performed by TRC and observed by TEC Inc. on July 29, 2019 in eight locations on site. The soil classifications of sand, sandy loam, and loam were determined, which supports the proposed infiltration systems do to the soil being naturally well-draining.

Eight tests pits were conducted within the railway in which all pits were found to have a top layer of dark brown fine sand followed by a brown to light brown sand layer. Test pits TP-1,TP-2 and TP-7 have an estimated seasonal high groundwater (ESHGW) greater than 9 feet and test pits TP-4, TP-6, and TP-8 have an ESHGW greater than 10 feet. Test pit TP-3 recorded ground water at 9.5 feet and TP-5 recorded groundwater at 3.5 feet. To mitigate peak flows, rain gardens and an infiltration basin are proposed as opposed to retain water before entering surrounding resource areas. Any bioretention area/infiltration basin that have a groundwater separation less than 4' from the bottom layer (Basins 2P, 4P, 7P, & 8P) have a mounding analysis provided per the requirements in the Massachusetts Stormwater Handbook.

As a redevelopment project that will increase impervious onsite, infiltration BMPs have been selected to mitigate this impact to surrounding resources. The pre-treatment BMP proposed with infiltration is vegetated filter strips & sediment forebays, which will provide an improvement to water quality compared to existing conditions. Please refer to the attached Test Pit Logs within Appendix A for additional information.

4. *For new development, stormwater management systems must be designed to remove 80 percent of Total Suspended Solids*.

The proposed stormwater management design will implement BMP's including rain gardens, swales, and an infiltration basin. Stormwater from the Project will achieve 10-25% TSS removal in pretreatment wherever possible. Given the project is a redevelopment & the limited size of of the corridor, the vegetated filter strips & sediment forebays utilized are the most effective non-structural pretreatment method. Using these pretreatment methods, rain gardens will achieve up to 90% TSS removal & the infiltration basin will achieve 80% TSS removal, which were implemented for several subcatchments. Refer to *Appendix B-Water Quality Data* for the TSS Removal Spreadsheet.

Sediment Forebays – Water Quality Volume (WQV_{SF})

The proposed infiltration basin (Basin 2P) utilizes two sediment forebays to pretreat runoff prior to infiltrating at the center of the basin. Listed below are the calculations proving these forebays can handle the 0.1" minimum WQV per the MA Stormwater Handbook:

Water Quality Volume for sediment forebays (WQV_{SF}) = 0.1" * A_{IMP}
Water Quality Volume provided by sediment forebay (V_{WQSF})

Southeast Sediment Forebay (2ESF):
Total contributing impervious area = 5,267 SF
WQV_{SF} = (0.1"/12 inches/foot) * 5,267 SF
WQV_{SF} = 43.9 CF
V_{WQSF} = 76 CF (provided)

76 CF > 43.9 CF, exceeding the requirement

Northwest Sediment Forebay (2WSF):
Total contributing impervious area = 21,068 SF
WQV_{SF} = (0.1"/12 inches/foot) * 21,068 SF
WQV_{SF} = 175.6 CF
V_{WQSF} = 180 CF (provided)

180 CF > 175.6 CF, exceeding the requirement

Water Quality Volume (WQV)

The proposed project is considered a redevelopment project. The redevelopment portion of the site was previously consisting of mostly pavement and the proposed will increase the impervious area onsite do to widening of the roadway. Under existing conditions, stormwater either sheet flows over pavement and discharges directly into a BVW or is caught in an isolated drain line before entering resource areas. The project will significantly improve the quality of stormwater runoff that enters the resource area by providing BMPs such as rain gardens, an infiltration basin, and sediment forebays.

Given the proposed project includes the redevelopment of several existing intersections, roadways, bridges, and AULs achieving water quality improvements via infiltration BMP's is not possible at several locations throughout the proposed corridor. Infiltration BMP's have been added wherever possible throughout the proposed project area, and are utilized to treat approximately 97,294 SF of impervious area (all subcatchment impervious areas except for areas A1, B1, C1, F1, & K1).

Calculation Method for Water Quality Treatment Volume
(Mass DEP Stormwater Handbook)

V_{WQ} = (D_{WQ}/12 inches/foot) * (A_{IMP} * 43,560 square feet/acre)

V_{WQ} = *Required Water Quality Volume* (in cubic feet)
D_{WQ} = Water Quality Depth: one-inch for discharges within a Zone II or Interim Wellhead Protection Area, to or near another critical area, runoff from a LUHPPL, or exfiltration to soils with infiltration rate greater than 2.4 inches/hour or greater; ½-inch for discharges near or to other areas.

A_{IMP} = Impervious Area (in acres)

V_{WQ} = (1"/12 inches/foot) * (2.23 acres * 43,560 square feet/acre)
V_{WQ} = (0.0833 feet)*(97,294 square feet)
V_{WQ} = 8,108 Cubic Feet

11,939 CF > 8,108 CF, exceeding the requirement.

5. *Stormwater discharges from areas with higher potential pollutant loads require the use of specific stormwater management BMPs*.

The proposed project is not considered a LUHPPL according to stipulations written within the Department of Environmental Protection 310 CMR – Wetland Protection Act.

6. *Stormwater discharges to critical areas must utilize certain stormwater management BMPs approved for critical areas. Critical areas are Outstanding Resource Waters, shell fish beds, swimming beaches, cold water fisheries and recharge areas for public water supplies*.

According to publicly available online resources (MassGIS's Online Mapping Tool) and on-site survey information shows the project site is not located within any critical areas.

7. *Redevelopment of previously developed areas must meet the Stormwater Management Standards to the maximum extent practicable*.

The Project is considered a redevelopment project due to it being the creation of a bike/walking path through a previously developed portion of Lawrence. The redevelopment will increase impervious area on site but will improve the quality of stormwater runoff that leaves the site and enters the resource areas. The Project has been designed to meet all Stormwater Standards to the maximum extent practicable.

8. *Erosion and sediment controls must be implemented to prevent impacts during construction or land disturbance activities*.

The project is over one acre in disturbed area and therefore will require the development of a Stormwater Pollution Prevention Plan prior to the start of construction. The Project has been designed to include erosion and sedimentation controls to prevent impacts to the resource areas. Construction activities will be isolated from downgradient areas by installing erosion control measures including a construction entrance/exit, compost filter socks, silt fences and inlet protection devices. Refer to *Appendix F-CPPP* for the Construction Period Pollution Prevention and Erosion and Sedimentation Control Plan.

9. *All stormwater management systems must have an operation and maintenance plan to ensure that systems function as designed*.

The Project includes a long-term Operation and Maintenance Plan. Refer to *Appendix D-O&M Plan* for the required procedures, frequencies, costs, and methods associated with the long-term Operations and Maintenance of the proposed drainage system.

10*. Illicit Discharges*

Only stormwater will be conveyed to the stormwater management system. No illicit materials or connections are permitted. Refer to *Appendix E-Illicit Discharge Statement* to view this agreement.

Conclusion

This proposed LMRC redevelopment will provide improved water quality treatment through the use of stormwater best management practices. The stormwater management plan controls the flow of stormwater, reduces peak runoff rates, and provides water quality treatment that meets MassDEP Stormwater Standards to the maximum extent practicable. The plan also provides erosion and sediment control which will result in cleaner stormwater runoff and a Long Term Operation and Maintenance plan to ensure the proper function of the system over time. The project has been designed in accordance with the Stormwater Management Policy and the City of Lawrence's Stormwater Bylaws.

Site Plans

Drainage Figures

LMRC Rail Trail
Lawrence, Massachusetts

Site Plans Index

No.	Drawing Title	Latest Issue
C-1	Title & Index Sheet	10/19/2022
S-1	Subcatchment Area Summary	10/19/2022
E-1 - E-15	Pre-Development Conditions	10/19/2022
P-1 - P-15	Post Development Conditions	10/19/2022

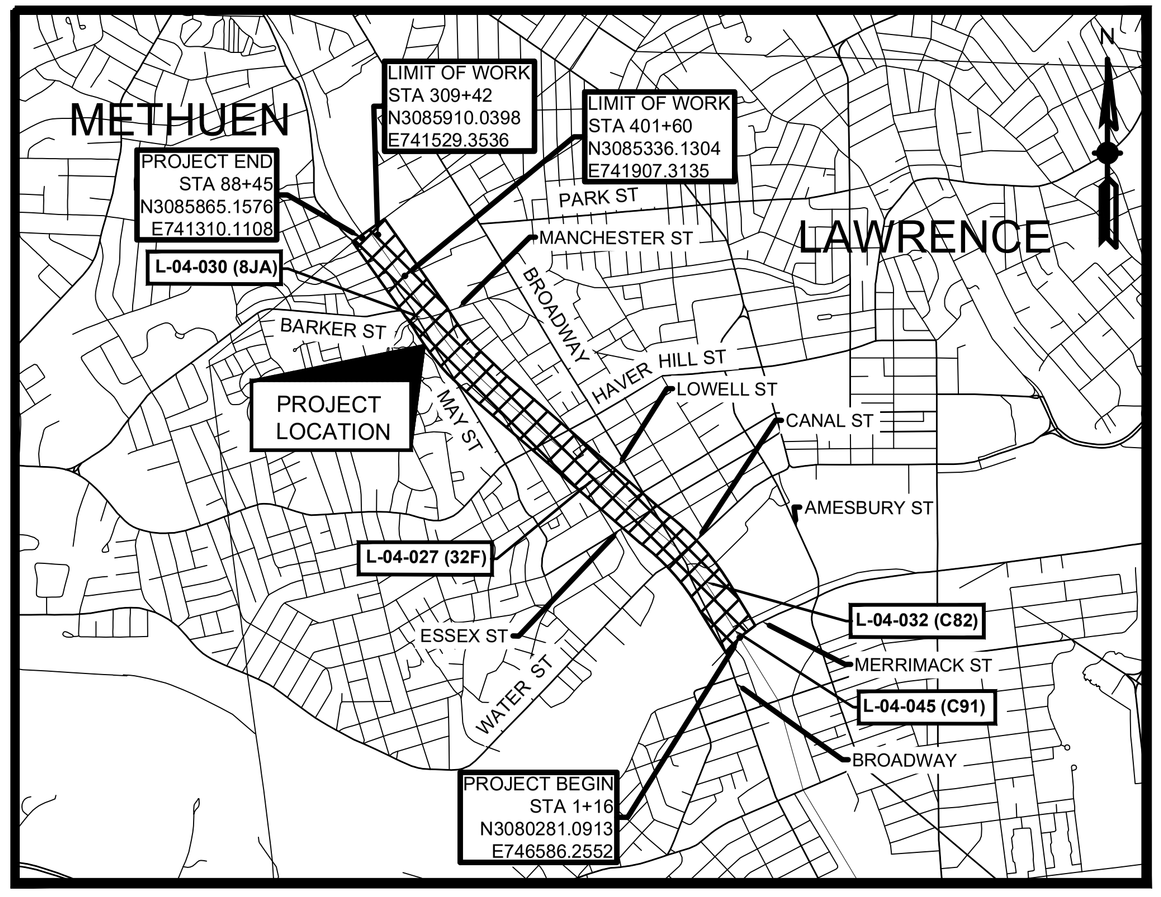

0 1500 3000 4500 6000

SCALE: 1" = 1500'

TEC The Engineering Corp

TEC, Inc.

282 Merrimack Street
2nd Floor
Lawrence, MA 01843
978-794-1792

169 Ocean Blvd
PO Box 249
Hampton, NH 03842
603-601-8154

311 Main Street
2nd Floor
Worcester, MA 01608
508-868-5104

www.TheEngineeringCorp.com

DESIGNED BY	WNB
DRAWN BY	SNL
CHECKED BY	PFE
DATE	10/19/2022
SCALE	As Noted

PREPARED FOR

City of Lawrence
200 Common Street
Lawrence, MA 01840

REVISIONS

ISSUED FOR

75% Submission

PROJECT TITLE

Lawrence Manchester Rail Corridor (LMRC) Rail Trail

PROJECT LOCATION

City of Lawrence
Essex County, MA

DRAWING TITLE

Title &
Index Sheet

PROJECT NO.
T0694

TEC CAD FILE
608930_HDI(TITLE SHEET) - Drainage Cover.dwg

DRAWING NO.
C-1

SHEET 1 OF 32

A00860 - 237

Proposal No. 608930-128034

FOR PERMITTING PURPOSES - NOT FOR CONSTRUCTION

Pre-Development Conditions

SUBCATCHMENT	IMPERVIOUS (SF)	PERVIOUS (SF)	TOTAL (SF)
EX-A1	33512	24720	58232
EX-B1	20018	204	20222
EX-B2	37736	17180	54916
EX-C1	16171	40	16211
EX-D1	17781	80039	97820
EX-E1	76	33654	33730
EX-F1	20801	76325	97126
EX-G1	1922	8534	10456
EX-H1	14073	64584	78657
EX-I1	0	3259	3259
EX-J1	5950	21462	27412
EX-J2	1616	10314	11930
EX-K1	25798	129424	155222
TOTAL	195454	469739	665193

Post-Development Conditions

SUBCATCHMENT	IMPERVIOUS (SF)	PERVIOUS (SF)	TOTAL (SF)
PR-A1	32708	24468	57176
PR-B1	21088	204	21292
PR-B2	10366	14824	25190
PR-B3	10082	19443	29525
PR-C1	18181	2306	20487
PR-D1	26335	67573	93908
PR-E1	541	33189	33730
PR-F1	9477	5957	15434
PR-F2	7921	27588	35509
PR-F3	4464	7695	12159
PR-F4	6412	8240	14652
PR-F5	3972	6667	10639
PR-F6	13311	19270	32581
PR-F7	4727	5119	9846
PR-G1	0	9759	9759
PR-H1	1798	16666	18464
PR-H2	1943	19380	21323
PR-I1	191	12506	12697
PR-J1	153	4779	4932
PR-J2	3128	9783	12911
PR-J3	1950	13410	15360
PR-K1	31642	125977	157619
TOTAL	210390	454803	665193

TEC, Inc.

282 Merrimack Street
2nd Floor
Lawrence, MA 01843
978-794-1792

169 Ocean Blvd
PO Box 249
Hampton, NH 03842
603-601-8154

311 Main Street
2nd Floor
Worcester, MA 01608
508-868-5104

www.TheEngineeringCorp.com

DESIGNED BY	WNB
DRAWN BY	SNL
CHECKED BY	PFE
DATE	10/19/2022
SCALE	NTS

PREPARED FOR

City of Lawrence
200 Common Street
Lawrence, MA 01840

REVISIONS

ISSUED FOR

75% Submission

PROJECT TITLE

Lawrence Manchester Rail Corridor (LMRC) Rail Trail

PROJECT LOCATION

City of Lawrence
Essex County, MA

DRAWING TITLE

Area Summary

PROJECT NO.
T0694

TEC CAD FILE
608930_HDI(TITLE SHEET) - Drainage Cover.dwg

DRAWING NO.
S-1

SHEET 2 OF 32

A00860 - 238

Proposal No. 608930-128034

TEC
The Engineering Corp
TEC, Inc.
282 Merrimack Street
2nd Floor
Lawrence, MA 01843
978-794-1792

169 Ocean Blvd
PO Box 249
Hampton, NH 03842
603-601-8154

311 Main Street
2nd Floor
Worcester, MA 01608
508-868-5104

www.TheEngineeringCorp.com

DESIGNED BY	WNB
DRAWN BY	SNL
CHECKED BY	PFE
DATE	10/19/2022
SCALE	1" = 20'

PREPARED FOR
City of Lawrence
200 Common Street
Lawrence, MA 01840

REVISIONS

ISSUED FOR
75% Submission

PROJECT TITLE
Lawrence Manchester
Rail Corridor (LMRC)
Rail Trail

PROJECT LOCATION
City of Lawrence
Essex County, MA

DRAWING TITLE
Existing Drainage
Areas

PROJECT NO. T0694
TEC CAD FILE 608930_HDS\CONSTRUCTION PLANS\ - Pre-Drainage Figure.dwg
DRAWING NO. E-1
SHEET 3 OF 32

FOR PERMITTING PURPOSES - NOT FOR CONSTRUCTION

SCALE IN FEET 0 20 40

DRAINAGE AREA BOUNDARY
DESIGN POINT
SUBCATCHMENT AREA

A00860 - 240

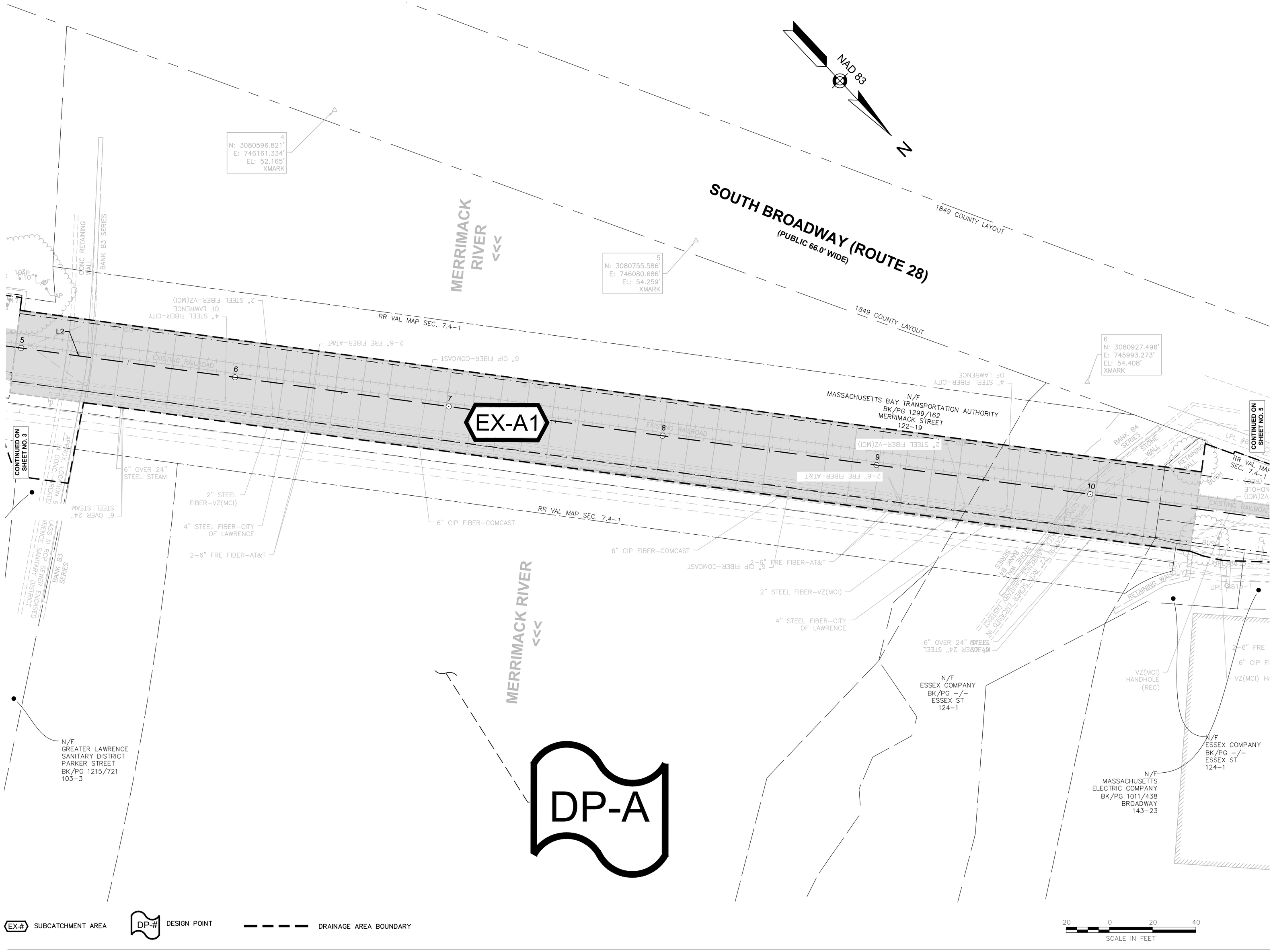

TEC
The Engineering Corp
TEC, Inc.
282 Merrimack Street
2nd Floor
Lawrence, MA 01843
978-794-1792
169 Ocean Blvd
PO Box 249
Hampton, NH 03842
603-601-8154
311 Main Street
2nd Floor
Worcester, MA 01608
508-868-5104
www.TheEngineeringCorp.com

DESIGNED BY	WNB
DRAWN BY	SNL
CHECKED BY	PFE
DATE	10/19/2022
SCALE	1" = 20'

PREPARED FOR

City of Lawrence
200 Common Street
Lawrence, MA 01840

REVISIONS

ISSUED FOR

75% Submission

PROJECT TITLE

Lawrence Manchester Rail Corridor (LMRC) Rail Trail

PROJECT LOCATION

City of Lawrence
Essex County, MA

DRAWING TITLE

Existing Drainage Areas

PROJECT NO.
T0694

TEC CAD FILE
608930_HDS/CONSTRUCTION PLANS - Pre Drainage Figure.dwg

DRAWING NO.
E-2

SHEET 4 OF 32

Proposal No. 608930-128034

FOR PERMITTING PURPOSES - NOT FOR CONSTRUCTION

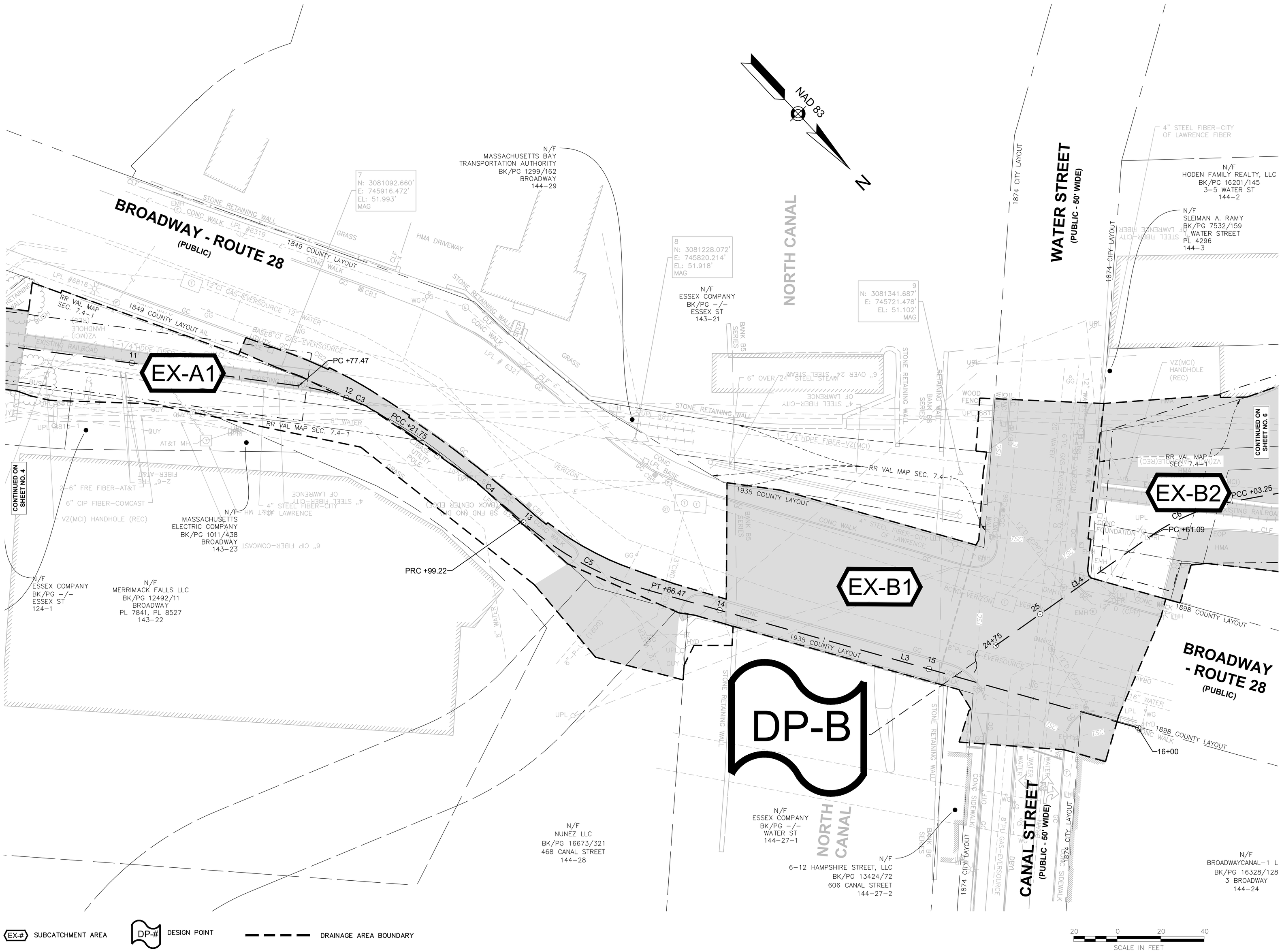

FOR PERMITTING PURPOSES - NOT FOR CONSTRUCTION

TEC, Inc.
282 Merrimack Street
2nd Floor
Lawrence, MA 01843
978-794-1792

169 Ocean Blvd
PO Box 249
Hampton, NH 03842
603-601-8154

311 Main Street
2nd Floor
Worcester, MA 01608
508-868-5104

www.TheEngineeringCorp.com

DESIGNED BY	WNB
DRAWN BY	SNL
CHECKED BY	PFE
DATE	10/19/2022
SCALE	1" = 20'

PREPARED FOR

City of Lawrence
200 Common Street
Lawrence, MA 01840

REVISIONS

ISSUED FOR

75% Submission

PROJECT TITLE

Lawrence Manchester Rail Corridor (LMRC) Rail Trail

PROJECT LOCATION

City of Lawrence
Essex County, MA

DRAWING TITLE

Existing Drainage Areas

PROJECT NO.
T0694

TEC CAD FILE
608930_HDS(CONSTRUCTION PLANS) - Pre Drainage Figure.dwg

DRAWING NO.
E-3

SHEET 5 OF 32

A00860 - 241

Proposal No. 608930-128034

NAD 83

N

STEEL FIBER-CITY
LAWRENCE FIBER

N/F
HODEN FAMILY REALTY, LLC
BK/PG 16201/145
3-5 WATER ST
144-2

N/F
SLEIMAN A. RAMY
BK/PG 7532/159
1 WATER STREET
PL 4296
144-3

11
N: 3081637.184'
E: 745434.887'
EL: 50.942'
MAG

N/F
MASSACHUSETTS BAY
TRANSPORTATION AUTHORITY
BK/PG 1299/162
CANAL STREET
144-4

RR VAL MAP SEC. 7.4-1

SHIPPING
CONTAINER

36"

GUY

21"
BP

N/F
FACELLA REALTY & INVESTMENT CO., INC.
BK/PG 929/394
600A ESSEX ST
PL 4146
144-15

GRASS

EOP

HMA

CONC. PAD

1-1/4"HDPE FIBER-VZ(MCI)

EX-B2

27

28

29

30

31

C8

26 PCC +03.25

PRC +81.07

CONTINUED ON SHEET NO. 5

CONTINUED ON SHEET NO. 7

EXISTING RAILROAD

CLF

UPI 8820

UPI 8821

10
N: 3081487.113'
E: 745595.131'
EL: 50.761'
MAG

12
N: 3081758.751'
E: 745310.501'
EL: 51.044'
MAG

1898 COUNTY LAYOUT

RETAINING WALL

BROADWAY
- ROUTE 28
(PUBLIC)

N/F
BERNARDO PENA
BK/PG 6873/44
10 BROADWAY
PL 3415
144-5

N/F
MASSACHUSETTS BAY
TRANSPORTATION AUTHORITY
BK/PG 1299/162
CANAL STREET
144-4

N/F
GREGORY REALTY TRUST
BK/PG 6479/193
14 BROADWAY
PL 1919
144-6

N/F
18-20 BROADWAY, LLC
BK/PG 10906/92
20 BROADWAY
144-8

N/F
CRISTIAN RIVAS
BK/PG 14751/181
598 ESSEX ST
144-13

N/F
BROADWAYCANAL-1 LLC
BK/PG 16328/128
3 BROADWAY
144-24

N/F
18-20 BROADWAY, LLC
BK/PG 10927/25
20 BROADWAY
144-9

EX-# SUBCATCHMENT AREA

DP-# DESIGN POINT

DRAINAGE AREA BOUNDARY

20 0 20 40
SCALE IN FEET

FOR PERMITTING PURPOSES - NOT FOR CONSTRUCTION

TEC
The Engineering Corp

TEC, Inc.

282 Merrimack Street
2nd Floor
Lawrence, MA 01843
978-794-1792

169 Ocean Blvd
PO Box 249
Hampton, NH 03842
603-601-8154

311 Main Street
2nd Floor
Worcester, MA 01608
508-868-5104

www.TheEngineeringCorp.com

DESIGNED BY	WNB
DRAWN BY	SNL
CHECKED BY	PFE
DATE	10/19/2022
SCALE	1" = 20'

PREPARED FOR

City of Lawrence
200 Common Street
Lawrence, MA 01840

REVISIONS

ISSUED FOR

75% Submission

PROJECT TITLE

Lawrence Manchester Rail Corridor (LMRC) Rail Trail

PROJECT LOCATION

City of Lawrence
Essex County, MA

DRAWING TITLE

Existing Drainage Areas

PROJECT NO.
T0694

TEC CAD FILE
608930_HDS\[CONSTRUCTION PLANS] - Pre Drainage Figure.dwg

DRAWING NO.
E-4

SHEET 6 OF 32

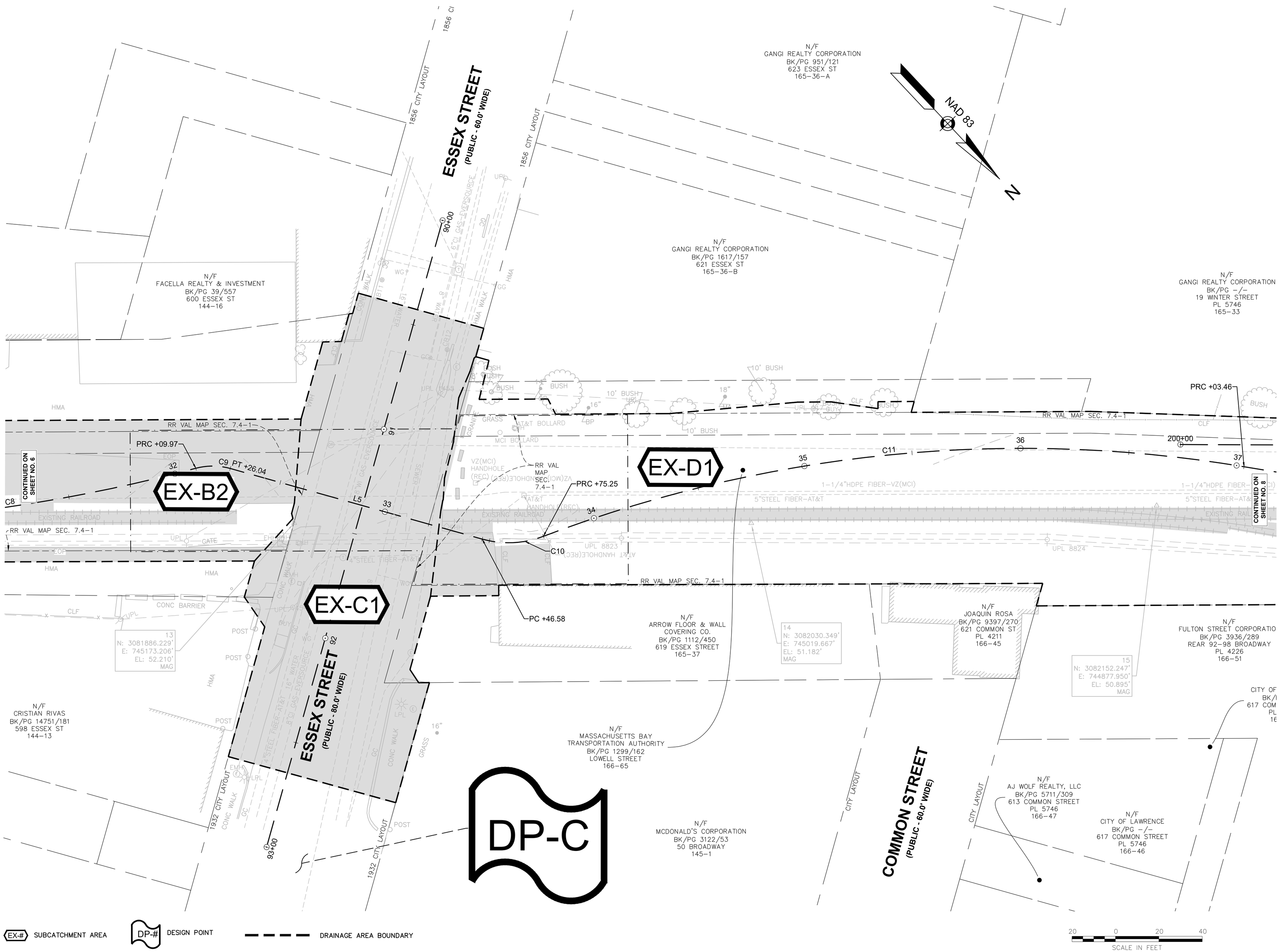

FOR PERMITTING PURPOSES - NOT FOR CONSTRUCTION

TEC
The Engineering Corp

TEC, Inc.

282 Merrimack Street
2nd Floor
Lawrence, MA 01843
978-794-1792

169 Ocean Blvd
PO Box 249
Hampton, NH 03842
603-601-8154

311 Main Street
2nd Floor
Worcester, MA 01608
508-868-5104

www.TheEngineeringCorp.com

DESIGNED BY	WNB
DRAWN BY	SNL
CHECKED BY	PFE
DATE	10/19/2022
SCALE	1" = 20'

PREPARED FOR

City of Lawrence
200 Common Street
Lawrence, MA 01840

REVISIONS

ISSUED FOR

75% Submission

PROJECT TITLE

Lawrence Manchester Rail Corridor (LMRC) Rail Trail

PROJECT LOCATION

City of Lawrence
Essex County, MA

DRAWING TITLE

Existing Drainage Areas

PROJECT NO.
T0694

TEC CAD FILE
608930_HDS\CONSTRUCTION PLANS\ - Pre Drainage Figure.dwg

DRAWING NO.
E-5

SHEET 7 OF 32

A00860 - 243

Proposal No. 608930-128034

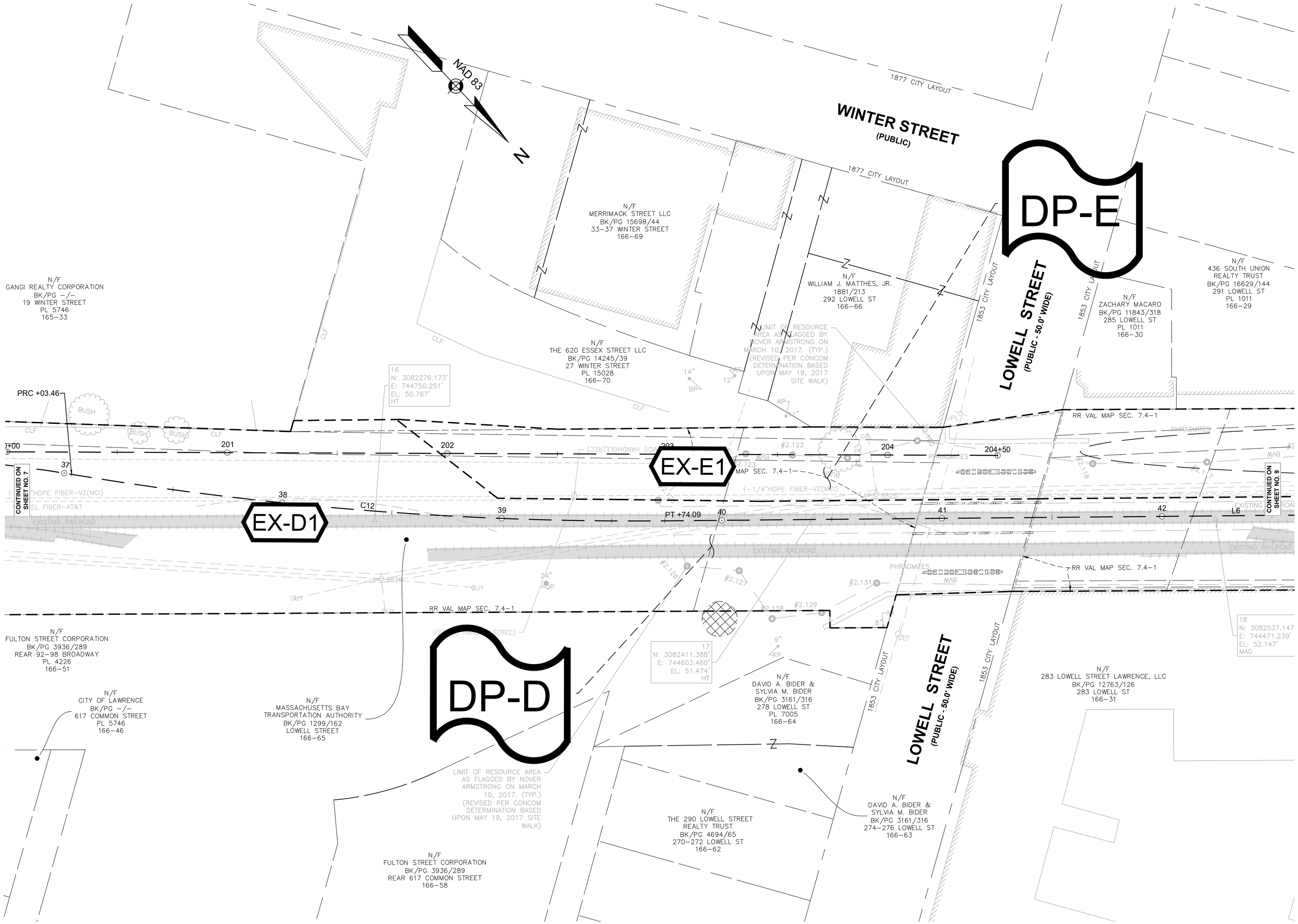

EX-# SUBCATCHMENT AREA DP-# DESIGN POINT DRAINAGE AREA BOUNDARY

FOR PERMITTING PURPOSES - NOT FOR CONSTRUCTION

TEC
The Engineering Corp

TEC, Inc.

282 Merrimack Street
2nd Floor
Lawrence, MA 01843
978-794-1792

169 Ocean Blvd
PO Box 249
Hampton, NH 03842
603-601-8154

311 Main Street
2nd Floor
Worcester, MA 01608
508-868-5104

www.TheEngineeringCorp.com

DESIGNED BY	WNB
DRAWN BY	SNL
CHECKED BY	PFE
DATE	10/19/2022
SCALE	1" = 20'

PREPARED FOR

City of Lawrence
200 Common Street
Lawrence, MA 01840

REVISIONS

ISSUED FOR

75% Submission

PROJECT TITLE

Lawrence Manchester Rail Corridor (LMRC) Rail Trail

PROJECT LOCATION

City of Lawrence
Essex County, MA

DRAWING TITLE

Existing Drainage Areas

PROJECT NO.
T0694

TEC CAD FILE
608930_HDS(CONSTRUCTION PLANS) - Pre Drainage Figure.dwg

DRAWING NO.
E-6

SHEET 8 OF 32

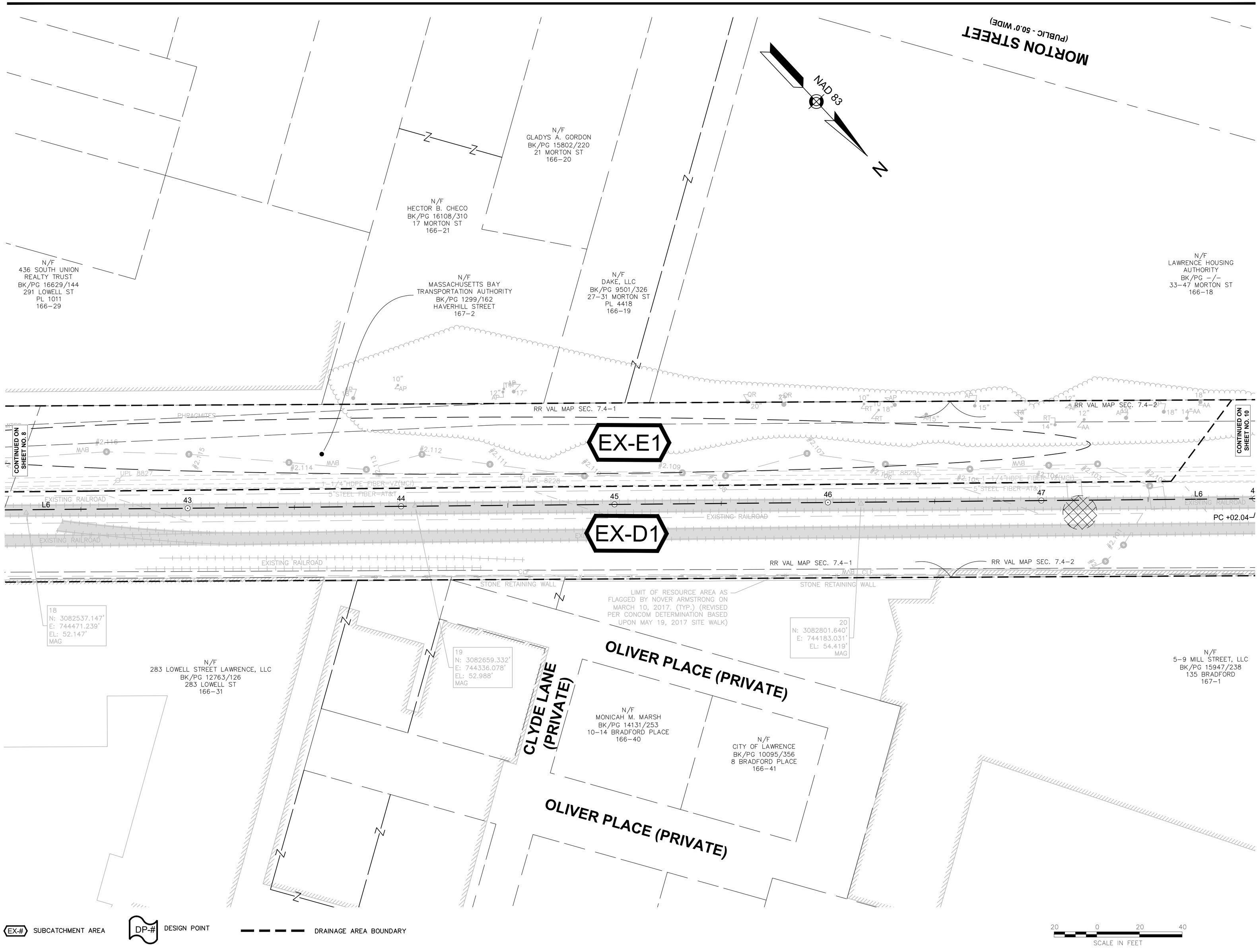

FOR PERMITTING PURPOSES - NOT FOR CONSTRUCTION

TEC, Inc.

282 Merrimack Street
2nd Floor
Lawrence, MA 01843
978-794-1792

169 Ocean Blvd
PO Box 249
Hampton, NH 03842
603-601-8154

311 Main Street
2nd Floor
Worcester, MA 01608
508-868-5104

www.TheEngineeringCorp.com

DESIGNED BY	WNB
DRAWN BY	SNL
CHECKED BY	PFE
DATE	10/19/2022
SCALE	1" = 20'

PREPARED FOR

City of Lawrence
200 Common Street
Lawrence, MA 01840

REVISIONS

ISSUED FOR

75% Submission

PROJECT TITLE

Lawrence Manchester Rail Corridor (LMRC) Rail Trail

PROJECT LOCATION

City of Lawrence
Essex County, MA

DRAWING TITLE

Existing Drainage Areas

PROJECT NO.
T0694

TEC CAD FILE
609930_HDS\CONSTRUCTION PLANS\ - Pre Drainage Figure.dwg

DRAWING NO.
E-7

SHEET 9 OF 32

A00860 - 245

Proposal No. 609930-128034

MORTON STREET
(PUBLIC - 50.0' WIDE)

CITY LAYOUT

HAVERHILL STREET - ROUTE 110
(PUBLIC - 50.0' WIDE)

1846 COUNTY LAYOUT

N/F
LAWRENCE HOUSING AUTHORITY
BK/PG -/-
33-47 MORTON ST
166-18

N/F
COLONY REALTY TRUST
BK/PG 10851/161
431 HAVERHILL ST
189-55

N/F
COLONY REALTY TRUST
BK/PG 4648/253
13 RAILROAD ST
189-50

N/F
MASSACHUSETTS ELECTRIC COMPANY
BK/PG 1074/21
425 HAVEHILL ST
PL 5594
189-56

N/F
5-9 MILL STREET, LLC
BK/PG 15947/238
135 BRADFORD
167-1

N/F
BERNARDO PENA
BK/PG 6731/168
413-415 HAVERHILL ST
167-3

N/F
MASSACHUSETTS BAY TRANSPORTATION AUTHORITY
BK/PG 1299/162
MERRIMACK STREET
212-24

N/F
LAWRENCE FAMILY DEVELOPMENT AND EDUCATION FUND, INC.
BK/PG 4309/86
32 WEST STREET
189-58

EX-E1

EX-D1

EX-F1

DP-F

RR VAL MAP SEC. 7.4-2

PRC +61.93
PT +84.68
PC +02.04
PC +99.04
PRC +30.97
PRC +39.93
PRC +65.48
PRC +82.22

500+00 SIDEWALK=
50+74.76 LAWRENCE RAIL TRAIL B

21
N: 3082941.068'
E: 744045.973'
EL: 55.983'
MAG

22
N: 3083066.986'
E: 743901.176'
EL: 58.047'
XMARK

23
N: 3083196.703'
E: 743759.538'
EL: 58.240'
MAG

CONTINUED ON SHEET NO. 9

CONTINUED ON SHEET NO. 11

EX-# SUBCATCHMENT AREA

DP-# DESIGN POINT

DRAINAGE AREA BOUNDARY

20 0 20 40
SCALE IN FEET

FOR PERMITTING PURPOSES - NOT FOR CONSTRUCTION

TEC
The Engineering Corp

TEC, Inc.

282 Merrimack Street
2nd Floor
Lawrence, MA 01843
978-794-1792

169 Ocean Blvd
PO Box 249
Hampton, NH 03842
603-601-8154

311 Main Street
2nd Floor
Worcester, MA 01608
508-868-5104

www.TheEngineeringCorp.com

DESIGNED BY	WNB
DRAWN BY	SNL
CHECKED BY	PFE
DATE	10/19/2022
SCALE	1" = 20'

PREPARED FOR

City of Lawrence
200 Common Street
Lawrence, MA 01840

REVISIONS

ISSUED FOR

75% Submission

PROJECT TITLE

Lawrence Manchester Rail Corridor (LMRC) Rail Trail

PROJECT LOCATION

City of Lawrence
Essex County, MA

DRAWING TITLE

Existing Drainage Areas

PROJECT NO.
T0694

TEC CAD FILE
608930_HDS\CONSTRUCTION PLANS\ - Pre Drainage Figure.dwg

DRAWING NO.
E-8

SHEET 10 OF 32

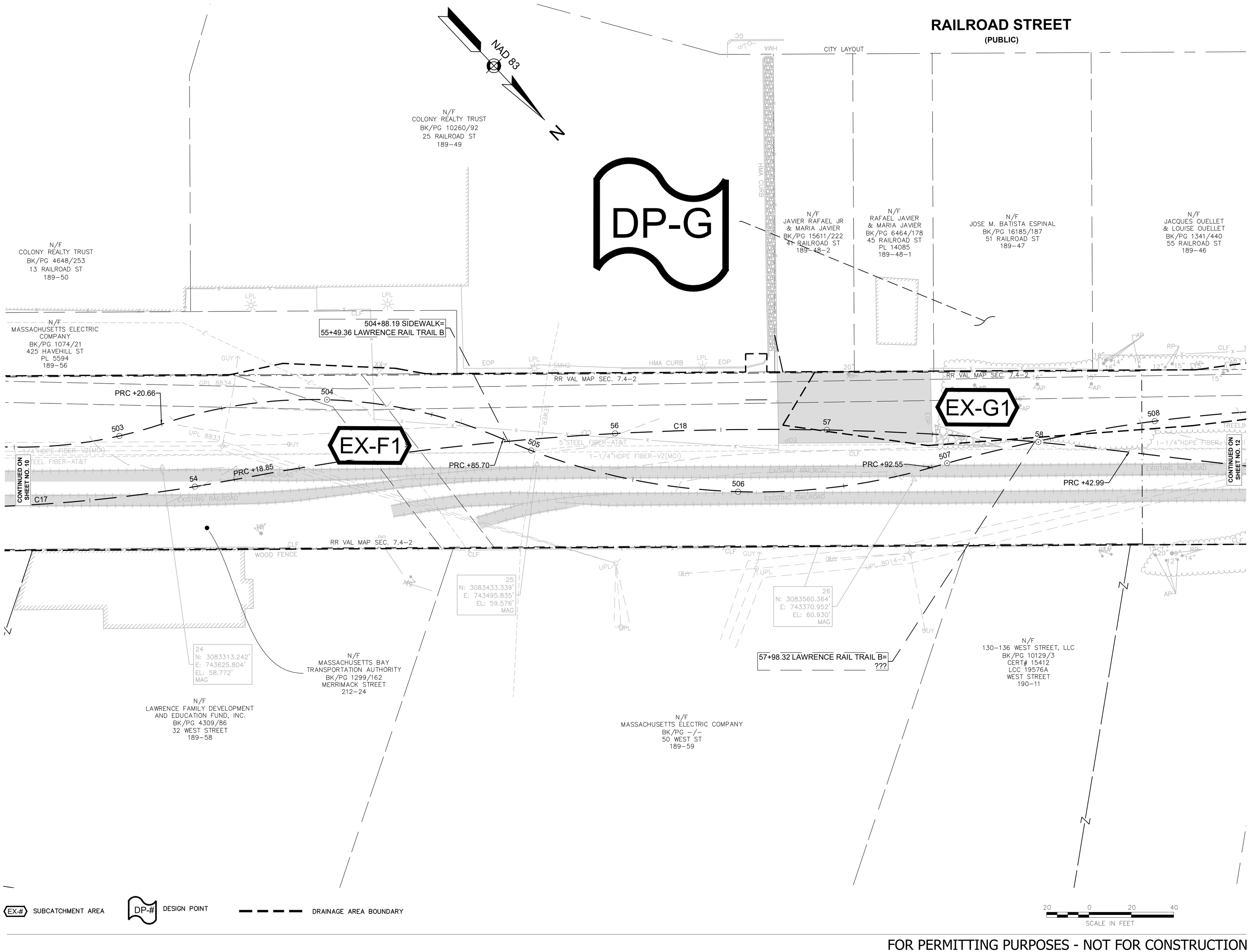

FOR PERMITTING PURPOSES - NOT FOR CONSTRUCTION

TEC
The Engineering Corp
TEC, Inc.
282 Merrimack Street
2nd Floor
Lawrence, MA 01843
978-794-1792
169 Ocean Blvd
PO Box 249
Hampton, NH 03842
603-601-8154
311 Main Street
2nd Floor
Worcester, MA 01608
508-868-5104
www.TheEngineeringCorp.com

DESIGNED BY	WNB
DRAWN BY	SNL
CHECKED BY	PFE
DATE	10/19/2022
SCALE	1" = 20'

PREPARED FOR

City of Lawrence
200 Common Street
Lawrence, MA 01840

REVISIONS

ISSUED FOR

75% Submission

PROJECT TITLE

Lawrence Manchester Rail Corridor (LMRC) Rail Trail

PROJECT LOCATION

City of Lawrence
Essex County, MA

DRAWING TITLE

Existing Drainage Areas

PROJECT NO.
T0694

TEC CAD FILE
608930_HDS/CONSTRUCTION PLANS - Pre Drainage Figure.dwg

DRAWING NO.
E-9

SHEET 11 OF 32

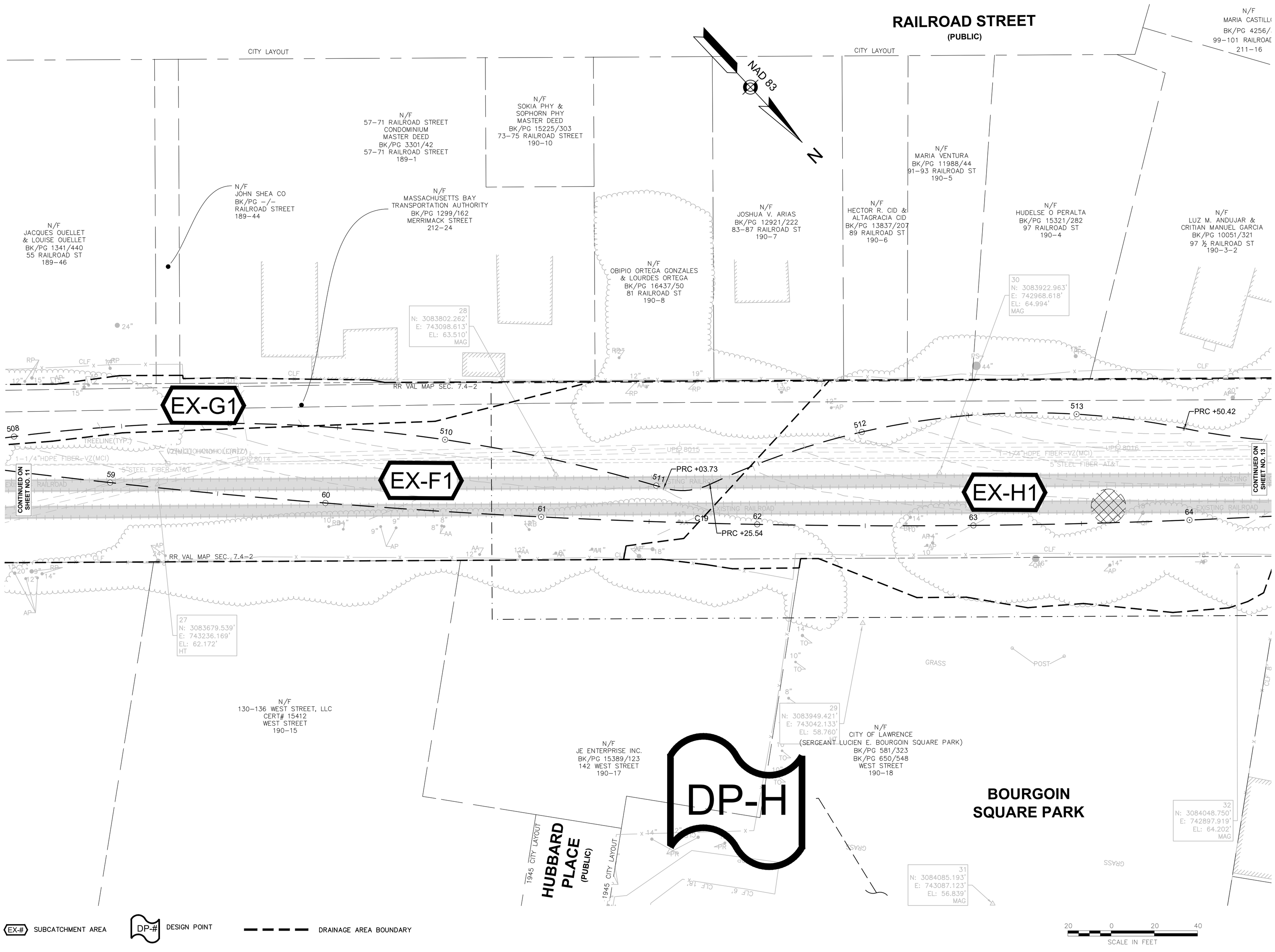

FOR PERMITTING PURPOSES - NOT FOR CONSTRUCTION

TEC
The Engineering Corp

TEC, Inc.

282 Merrimack Street
2nd Floor
Lawrence, MA 01843
978-794-1792

169 Ocean Blvd
PO Box 249
Hampton, NH 03842
603-601-8154

311 Main Street
2nd Floor
Worcester, MA 01608
508-868-5104

www.TheEngineeringCorp.com

DESIGNED BY	WNB
DRAWN BY	SNL
CHECKED BY	PFE
DATE	10/19/2022
SCALE	1" = 20'

PREPARED FOR

City of Lawrence
200 Common Street
Lawrence, MA 01840

REVISIONS

ISSUED FOR

75% Submission

PROJECT TITLE

Lawrence Manchester Rail Corridor (LMRC) Rail Trail

PROJECT LOCATION

City of Lawrence
Essex County, MA

DRAWING TITLE

Existing Drainage Areas

PROJECT NO.
T0694

TEC CAD FILE
608930_HDS/CONSTRUCTION PLANS - Pre Drainage Figure.dwg

DRAWING NO.
E-10

SHEET 12 OF 32

A00860 - 248

Proposal No. 608930-128034

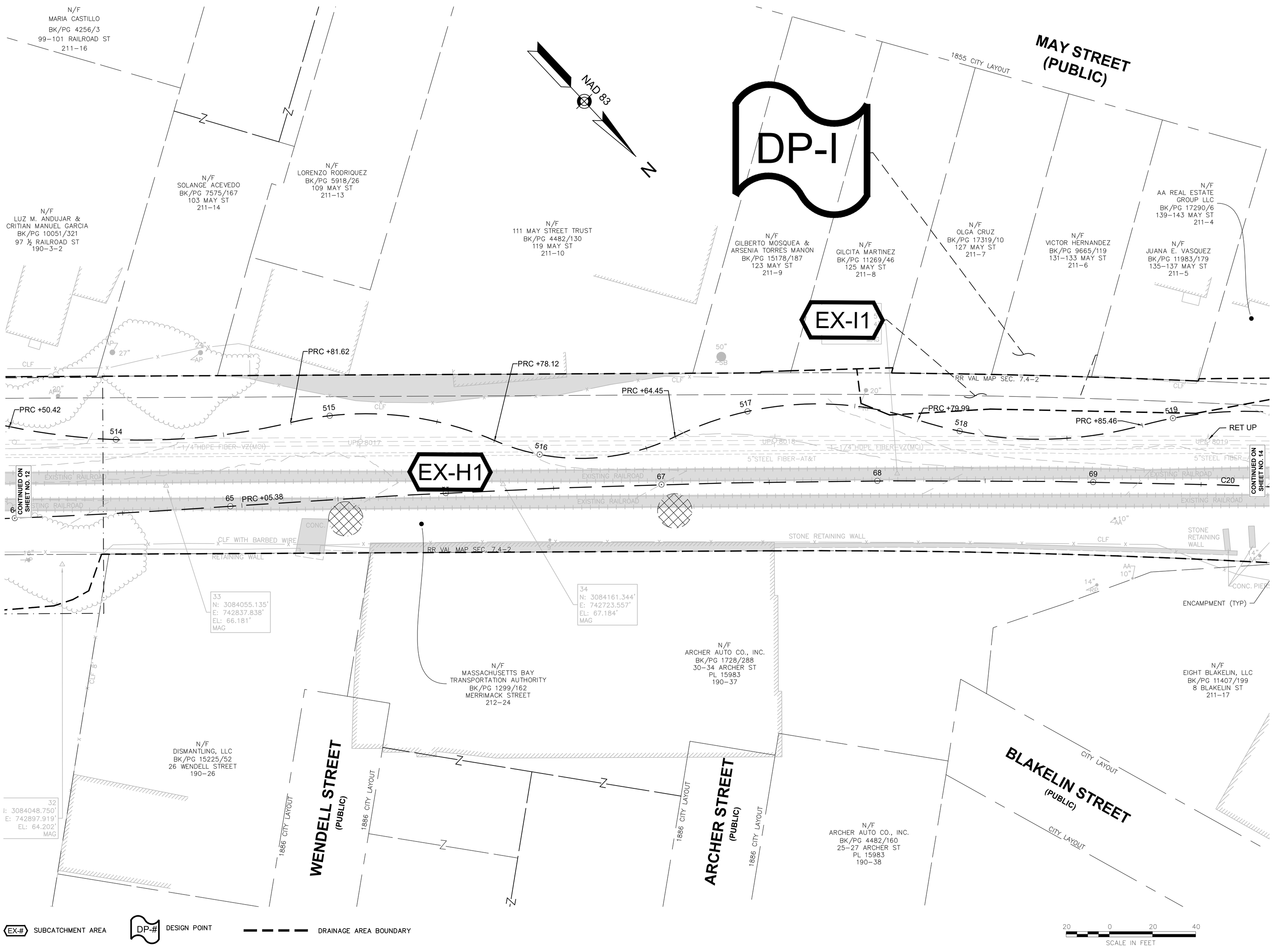

FOR PERMITTING PURPOSES - NOT FOR CONSTRUCTION

TEC
The Engineering Corp

TEC, Inc.

282 Merrimack Street
2nd Floor
Lawrence, MA 01843
978-794-1792

169 Ocean Blvd
PO Box 249
Hampton, NH 03842
603-601-8154

311 Main Street
2nd Floor
Worcester, MA 01608
508-868-5104

www.TheEngineeringCorp.com

DESIGNED BY	WNB
DRAWN BY	SNL
CHECKED BY	PFE
DATE	10/19/2022
SCALE	1" = 20'

PREPARED FOR

City of Lawrence
200 Common Street
Lawrence, MA 01840

REVISIONS

ISSUED FOR

75% Submission

PROJECT TITLE

Lawrence Manchester Rail Corridor (LMRC) Rail Trail

PROJECT LOCATION

City of Lawrence
Essex County, MA

DRAWING TITLE

Existing Drainage Areas

PROJECT NO.
T0694

TEC CAD FILE
608930_HDS(CONSTRUCTION PLANS) - Pre Drainage Figure.dwg

DRAWING NO.
E-11

SHEET 13 OF 32

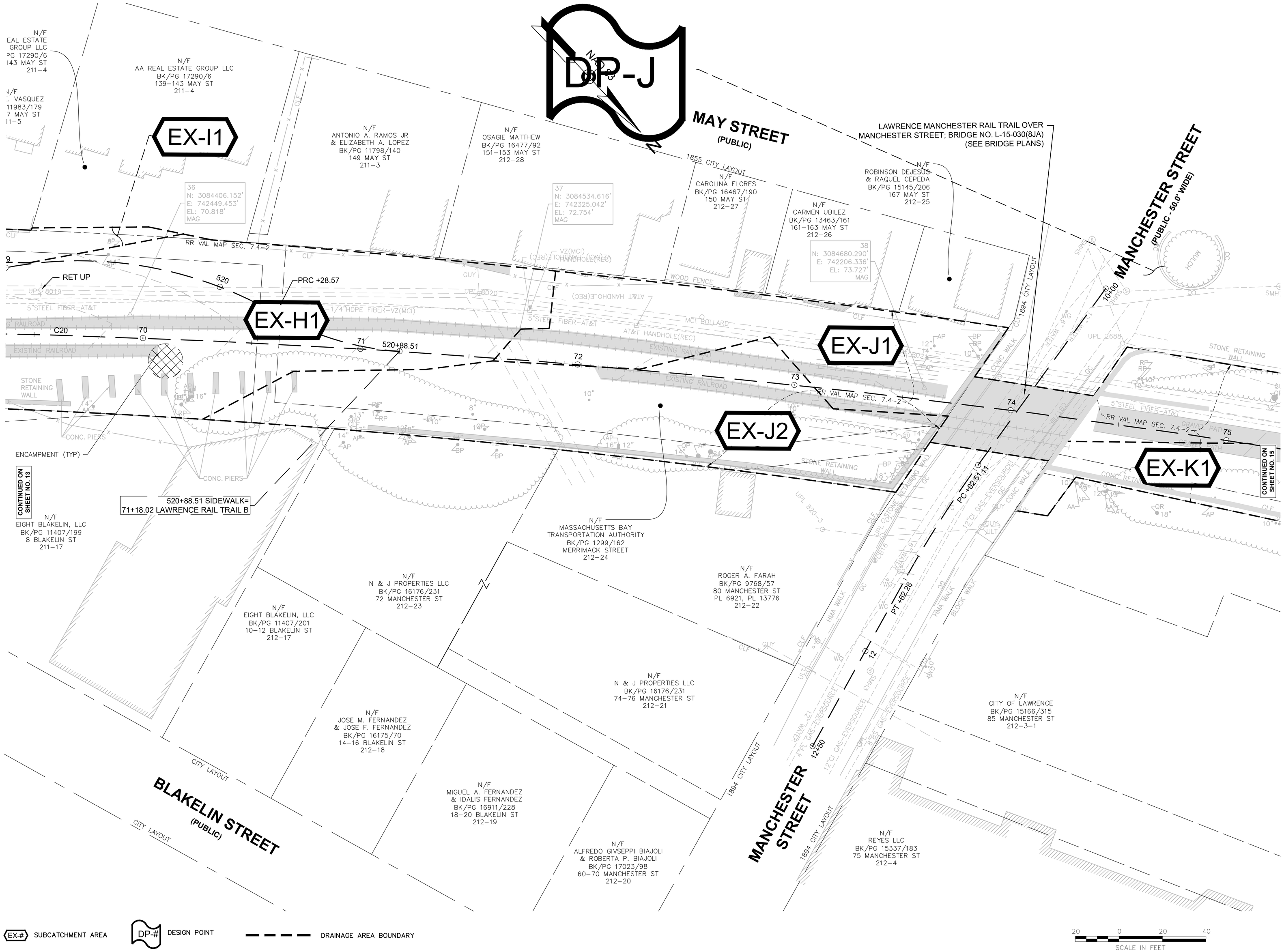

FOR PERMITTING PURPOSES - NOT FOR CONSTRUCTION

TEC The Engineering Corp

TEC, Inc.

282 Merrimack Street
2nd Floor
Lawrence, MA 01843
978-794-1792

169 Ocean Blvd
PO Box 249
Hampton, NH 03842
603-601-8154

311 Main Street
2nd Floor
Worcester, MA 01608
508-868-5104

www.TheEngineeringCorp.com

DESIGNED BY	WNB
DRAWN BY	SNL
CHECKED BY	PFE
DATE	10/19/2022
SCALE	1" = 20'

PREPARED FOR

City of Lawrence
200 Common Street
Lawrence, MA 01840

REVISIONS

ISSUED FOR

75% Submission

PROJECT TITLE

Lawrence Manchester Rail Corridor (LMRC) Rail Trail

PROJECT LOCATION

City of Lawrence
Essex County, MA

DRAWING TITLE

Existing Drainage Areas

PROJECT NO.
T0694

TEC CAD FILE
608930_HDS\CONSTRUCTION PLANS\ - Pre Drainage Figure.dwg

DRAWING NO.
E-12

SHEET 14 OF 32

A00860 - 250

Proposal No. 608930-128034

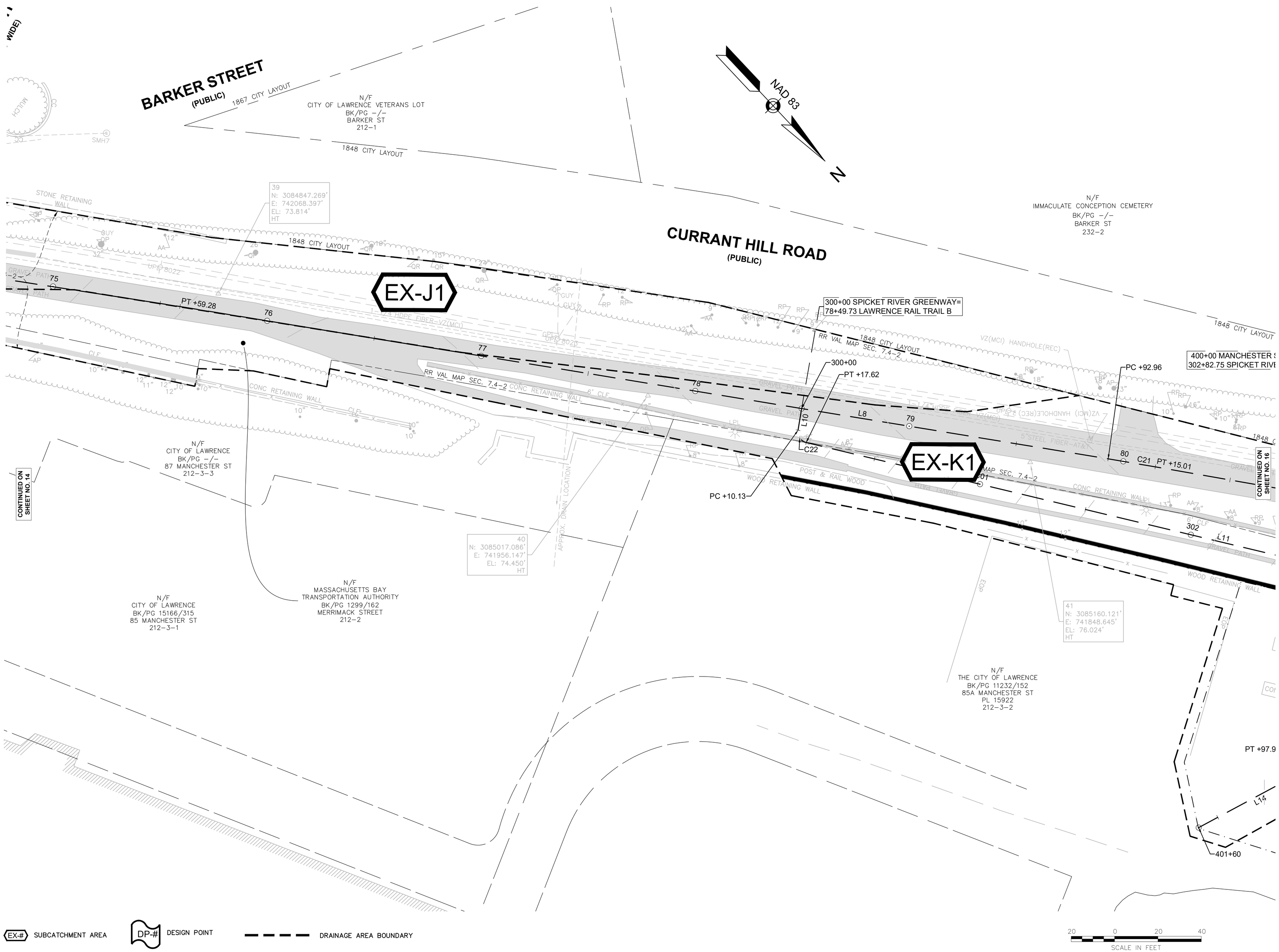

FOR PERMITTING PURPOSES - NOT FOR CONSTRUCTION

TEC
The Engineering Corp

TEC, Inc.

282 Merrimack Street
2nd Floor
Lawrence, MA 01843
978-794-1792

169 Ocean Blvd
PO Box 249
Hampton, NH 03842
603-601-8154

311 Main Street
2nd Floor
Worcester, MA 01608
508-868-5104

www.TheEngineeringCorp.com

DESIGNED BY	WNB
DRAWN BY	SNL
CHECKED BY	PFE
DATE	10/19/2022
SCALE	1" = 20'

PREPARED FOR

City of Lawrence
200 Common Street
Lawrence, MA 01840

REVISIONS

ISSUED FOR

75% Submission

PROJECT TITLE

Lawrence Manchester Rail Corridor (LMRC) Rail Trail

PROJECT LOCATION

City of Lawrence
Essex County, MA

DRAWING TITLE

Existing Drainage Areas

PROJECT NO.
T0694

TEC CAD FILE
608930_HDS/CONSTRUCTION PLANS) - Pre Drainage Figure.dwg

DRAWING NO.
E-13

SHEET 15 OF 32

A00860 - 251

Proposal No. 608930-128034

1848 CITY LAYOUT

400+00 MANCHESTER STREET PARK=
302+82.75 SPICKET RIVER GREENWAY

400+00 MANCHESTER STREET PARK=
302+82.75 SPICKET RIVER GREENWAY

NAD 83

N

1848 CITY LAYOUT

1848 CITY LAYOUT

CURRANT HILL ROAD
(PUBLIC)

1848 CITY LAYOUT
RR VAL MAP SEC. 7.4-2

42
N: 3085326.439'
E: 741722.624'
EL: 78.309'
HT

43
N: 3085472.096'
E: 741613.032'
EL: 79.961'
HT

44
N: 3085624.865'
E: 741481.999'
EL: 81.222'
REBAR

RET CONC WALL

PC +92.78

400+00

PC +27.18

PT +97.94

401+60

RR VAL MAP SEC. 7.4-2

PCC +06.50

N/F
MASSACHUSETTS BAY
TRANSPORTATION AUTHORITY
BK/PG 1299/162
MERRIMACK STREET
212-2

N/F
THE CITY OF LAWRENCE
BK/PG 11232/152
85A MANCHESTER ST
PL 15922
212-3-2

EX-K1

DP-K

CONTINUED ON SHEET NO. 15

CONTINUED ON SHEET NO. 17

LIMIT OF RESOURCE AREA
AS FLAGGED BY NOVER ARMSTRONG
ON MARCH 10, 2017. (TYP.)

EX-# SUBCATCHMENT AREA

DP-# DESIGN POINT

DRAINAGE AREA BOUNDARY

20 0 20 40
SCALE IN FEET

FOR PERMITTING PURPOSES - NOT FOR CONSTRUCTION

TEC
The Engineering Corp

TEC, Inc.

282 Merrimack Street
2nd Floor
Lawrence, MA 01843
978-794-1792

169 Ocean Blvd
PO Box 249
Hampton, NH 03842
603-601-8154

311 Main Street
2nd Floor
Worcester, MA 01608
508-868-5104

www.TheEngineeringCorp.com

DESIGNED BY	WNB
DRAWN BY	SNL
CHECKED BY	PFE
DATE	10/19/2022
SCALE	1" = 20'

PREPARED FOR

City of Lawrence
200 Common Street
Lawrence, MA 01840

REVISIONS

ISSUED FOR

75% Submission

PROJECT TITLE

Lawrence Manchester Rail Corridor (LMRC) Rail Trail

PROJECT LOCATION

City of Lawrence
Essex County, MA

DRAWING TITLE

Existing Drainage Areas

PROJECT NO.
T0694

TEC CAD FILE
608930_HDS/CONSTRUCTION PLANS) - Pre Drainage Figure.dwg

DRAWING NO.
E-14

SHEET 16 OF 32

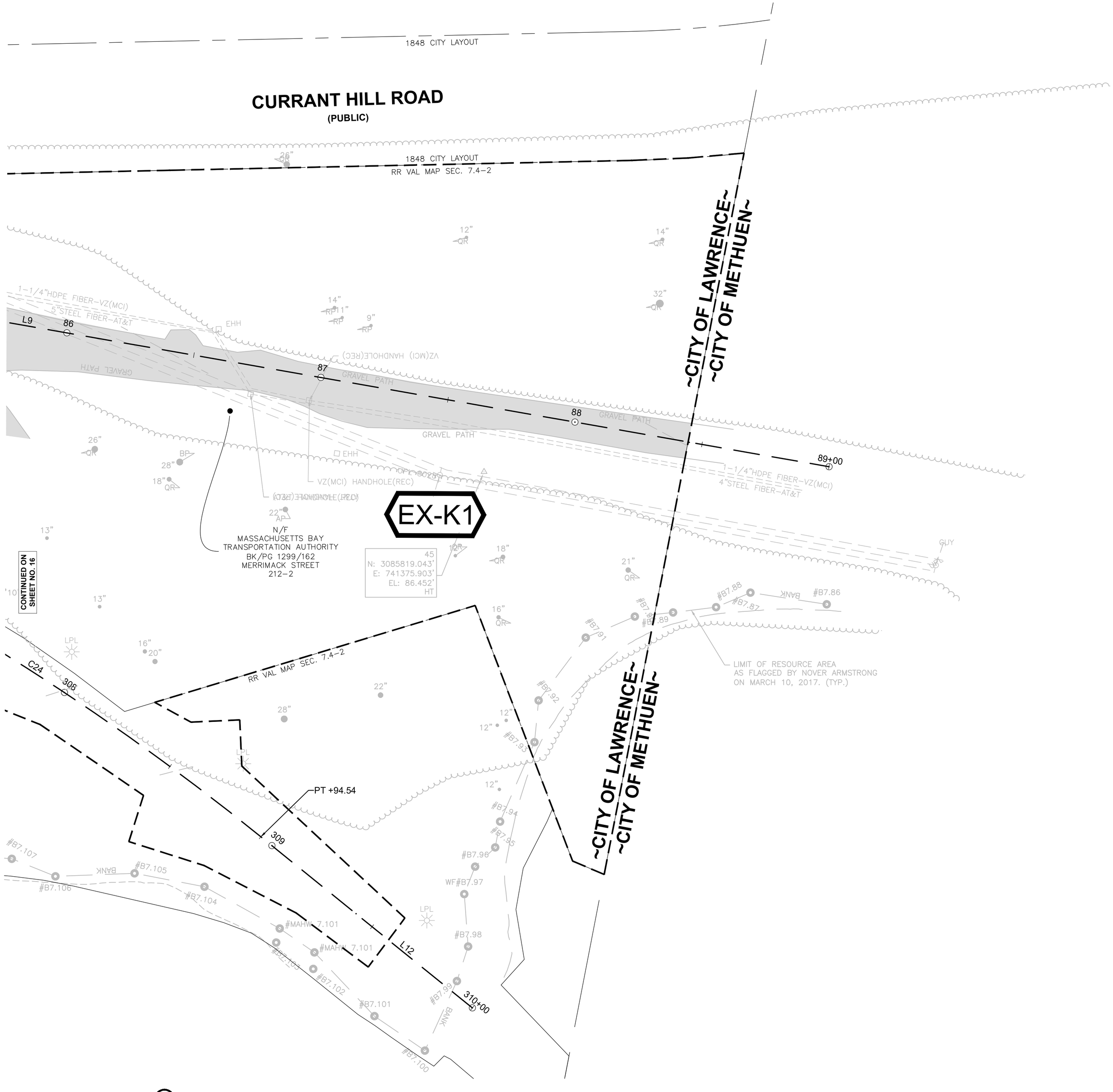

TEC, Inc.
282 Merrimack Street
2nd Floor
Lawrence, MA 01843
978-794-1792

169 Ocean Blvd
PO Box 249
Hampton, NH 03842
603-601-8154

311 Main Street
2nd Floor
Worcester, MA 01608
508-868-5104

www.TheEngineeringCorp.com

DESIGNED BY	WNB
DRAWN BY	SNL
CHECKED BY	PFE
DATE	10/19/2022
SCALE	1" = 20'

PREPARED FOR

City of Lawrence
200 Common Street
Lawrence, MA 01840

REVISIONS

ISSUED FOR

75% Submission

PROJECT TITLE

Lawrence Manchester Rail Corridor (LMRC) Rail Trail

PROJECT LOCATION

City of Lawrence
Essex County, MA

DRAWING TITLE

Existing Drainage Areas

PROJECT NO.
T0694

TEC CAD FILE
608930_HDS\CONSTRUCTION PLANS\ - Pre Drainage Figure.dwg

DRAWING NO.
E-15

SHEET 17 OF 32

FOR PERMITTING PURPOSES - NOT FOR CONSTRUCTION

A00860 - 253

Proposal No. 608930-128034

TEC
The Engineering Corp
TEC, Inc.
282 Merrimack Street
2nd Floor
Lawrence, MA 01843
978-794-1792

169 Ocean Blvd
PO Box 249
Hampton, NH 03842
603-601-8154

311 Main Street
2nd Floor
Worcester, MA 01608
508-868-5104

www.TheEngineeringCorp.com

DESIGNED BY	WNB
DRAWN BY	SNL
CHECKED BY	PFE
DATE	10/19/2022
SCALE	1" = 20'

PREPARED FOR
City of Lawrence
200 Common Street
Lawrence, MA 01840

REVISIONS

ISSUED FOR
75% Submission

PROJECT TITLE
Lawrence Manchester Rail Corridor (LMRC) Rail Trail

PROJECT LOCATION
City of Lawrence
Essex County, MA

DRAWING TITLE
Proposed Drainage Areas

PROJECT NO. T0694
TEC CAD FILE 608930_HDS\CONSTRUCTION PLANS\ Post Drainage Figure.dwg
DRAWING NO. P-1
SHEET 18 OF 32

FOR PERMITTING PURPOSES - NOT FOR CONSTRUCTION

SCALE IN FEET: 20 0 20 40

PR-A1 SUBCATCHMENT AREA
DP-# DESIGN POINT
DRAINAGE AREA BOUNDARY

SOUTH BROADWAY (ROUTE 28) (PUBLIC 66.0' WIDE)
MERRIMACK STREET (ROUTE 114) (PUBLIC 60.0' WIDE)
1909 CITY LAYOUT
NAD 83
N

PR-A1
1 PC +03.93 PRC +22.60 PT +41.07
RR VAL MAP SEC. 7.4-1
1+00
2 N: 3080446.799' E: 746438.265' EL: 51.350' MAG
3 N: 3080483.024' E: 746268.082' EL: 44.630' MAG
CONTINUED ON SHEET NO. 19

N/F 18-20 BROADWAY, LLC BK/PG 14201/101 2 SOUTH BROADWAY PL 5660 122-4
N/F CHRISTOS ROGARIS, TRUSTEE OF J.P. REALTY TRUST BK/PG 2484/97 8 SOUTH BROADWAY PL 5660 122-5
N/F CITY OF LAWRENCE BK/PG 15538/125 7 SOUTH CANAL ST 123-1
N/F MASSACHUSETTS BAY TRANSPORTATION AUTHORITY BK/PG 1299/162 122-119
N/F ESSEX COMPANY BK/PG -/- SOUTH BROADWAY/ MERRIMACK STREET 122-6
N/F MERRIMACK STREET REDEVELOPMENT AUTHORITY, LLC BK/PG 12208/202 SOUTH CANAL ST PL 13208 PL 13866 122-34
N/F ESSEX COMPANY BK/PG -/- PARKER STREET 103-2
N/F NUNEZ, LLC BK/PG 11297/139 5 - 7 MERRIMACK ST PL 15990 122-26
N/F MASSACHUSETTS BAY TRANSPORTATION AUTHORITY BK/PG 1299/162 SALEM STREET 121-48
N/F MERRIMACK STREET, LLC BK/PG 12934/193 11 MERRIMACK ST PL 13208 122-23

SOUTH CANAL

A00860 - 255

Proposal No. 608930-128034

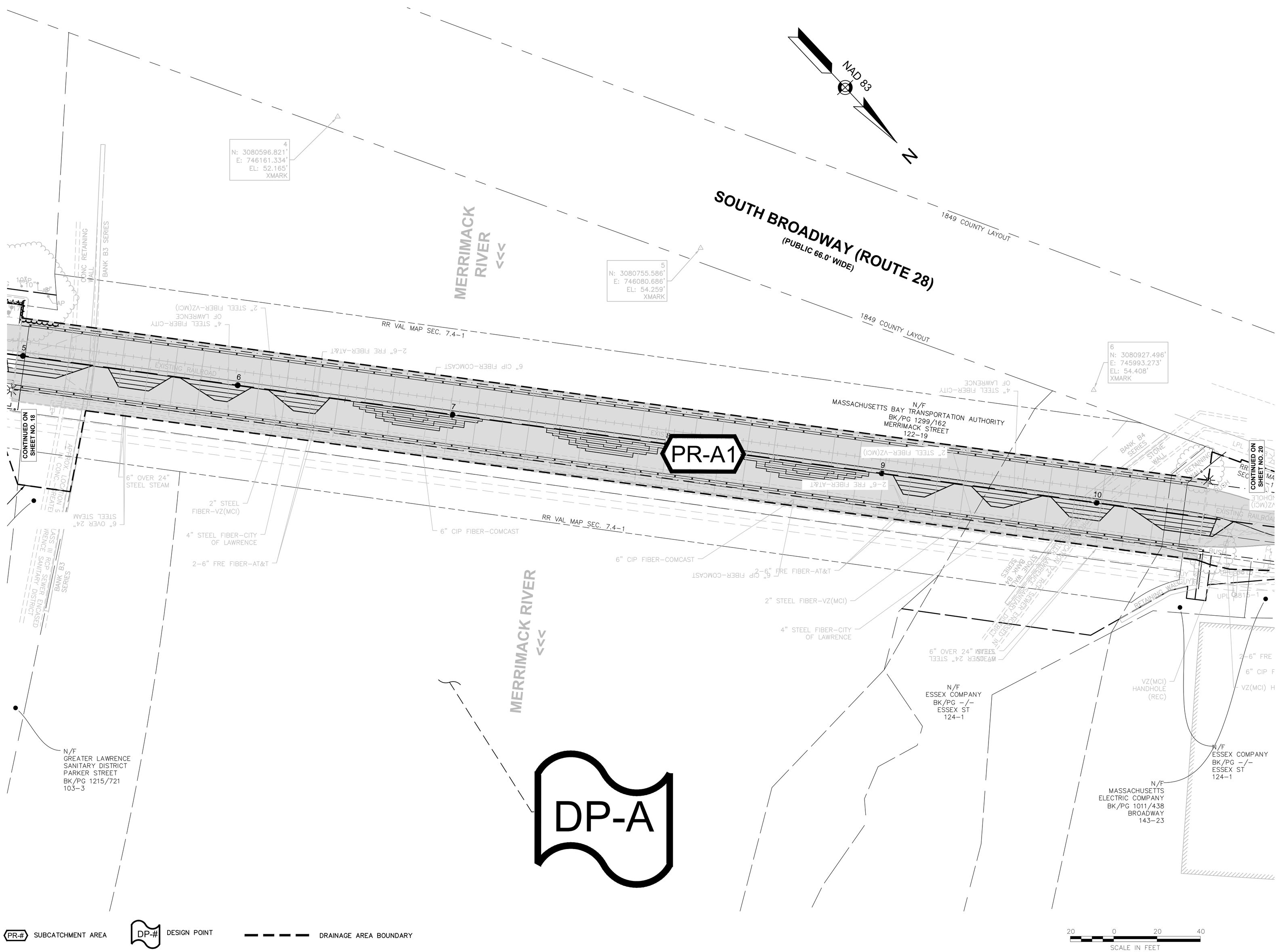

FOR PERMITTING PURPOSES - NOT FOR CONSTRUCTION

TEC
The Engineering Corp

TEC, Inc.

282 Merrimack Street
2nd Floor
Lawrence, MA 01843
978-794-1792

169 Ocean Blvd
PO Box 249
Hampton, NH 03842
603-601-8154

311 Main Street
2nd Floor
Worcester, MA 01608
508-868-5104

www.TheEngineeringCorp.com

DESIGNED BY	WNB
DRAWN BY	SNL
CHECKED BY	PFE
DATE	10/19/2022
SCALE	1" = 20'

PREPARED FOR

City of Lawrence
200 Common Street
Lawrence, MA 01840

REVISIONS

ISSUED FOR

75% Submission

PROJECT TITLE

Lawrence Manchester Rail Corridor (LMRC) Rail Trail

PROJECT LOCATION

City of Lawrence
Essex County, MA

DRAWING TITLE

Proposed Drainage Areas

PROJECT NO.
T0694

TEC CAD FILE
608930_HDS(CONSTRUCTION PLANS) - Post Drainage Figure.dwg

DRAWING NO.
P-2

SHEET 19 OF 32

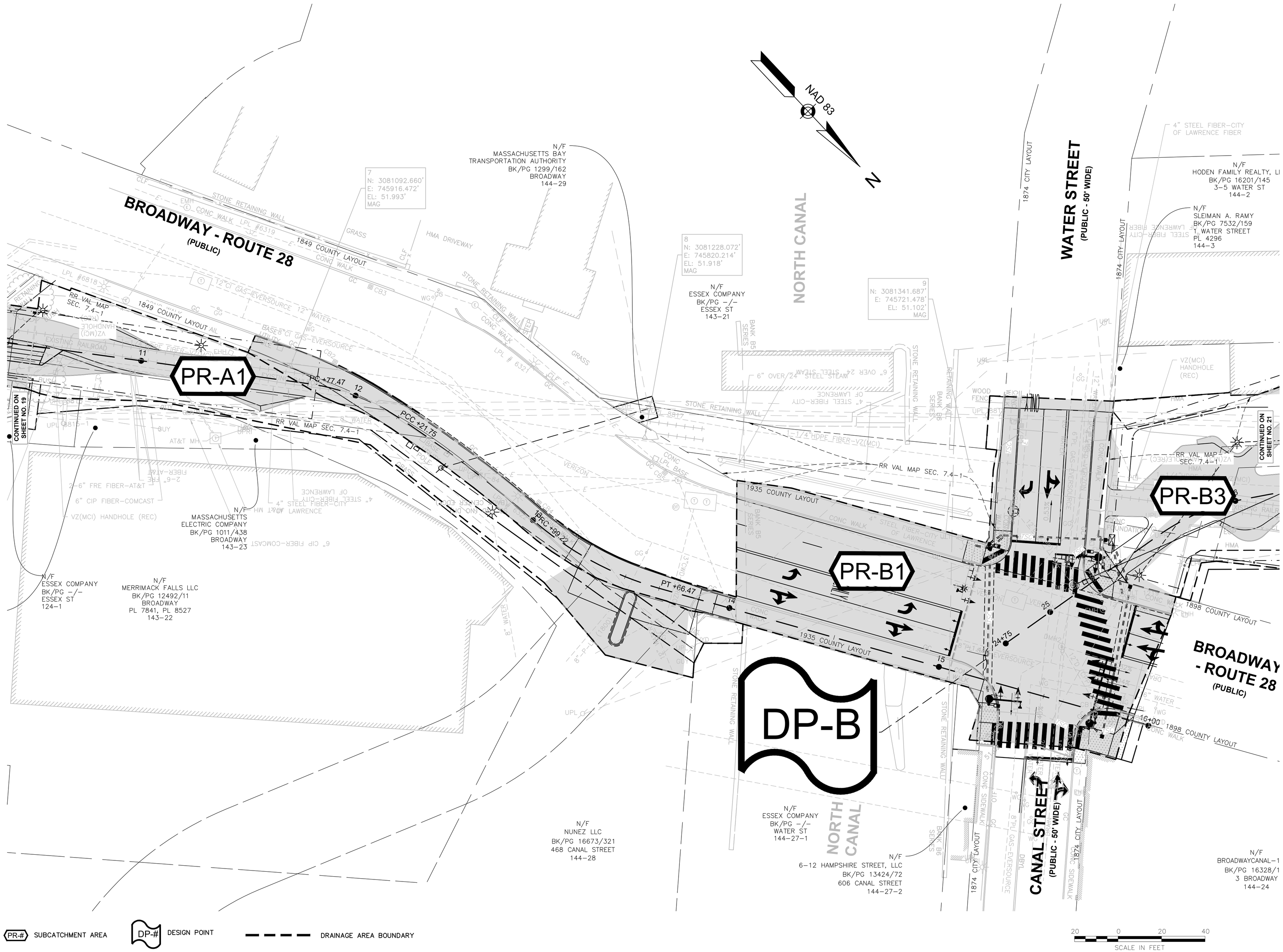

FOR PERMITTING PURPOSES - NOT FOR CONSTRUCTION

TEC
The Engineering Corp

TEC, Inc.

282 Merrimack Street
2nd Floor
Lawrence, MA 01843
978-794-1792

169 Ocean Blvd
PO Box 249
Hampton, NH 03842
603-601-8154

311 Main Street
2nd Floor
Worcester, MA 01608
508-868-5104

www.TheEngineeringCorp.com

DESIGNED BY	WNB
DRAWN BY	SNL
CHECKED BY	PFE
DATE	10/19/2022
SCALE	1" = 20'

PREPARED FOR

City of Lawrence
200 Common Street
Lawrence, MA 01840

REVISIONS

ISSUED FOR

75% Submission

PROJECT TITLE

Lawrence Manchester Rail Corridor (LMRC) Rail Trail

PROJECT LOCATION

City of Lawrence
Essex County, MA

DRAWING TITLE

Proposed Drainage Areas

PROJECT NO.
T0694

TEC CAD FILE
608930_HDS(CONSTRUCTION PLANS) - Post Drainage Figure.dwg

DRAWING NO.
P-3

SHEET 20 OF 32

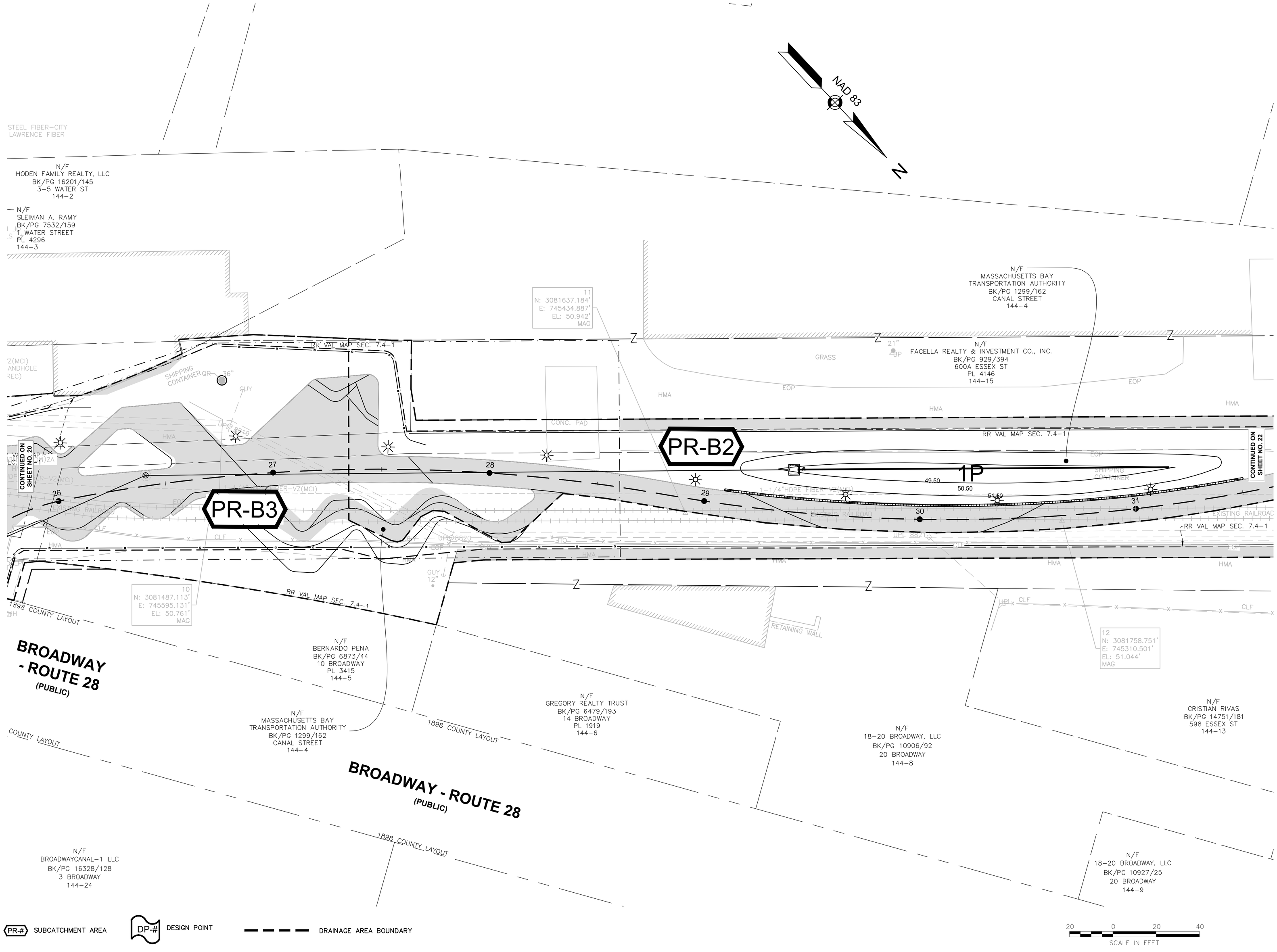

FOR PERMITTING PURPOSES - NOT FOR CONSTRUCTION

TEC
The Engineering Corp
TEC, Inc.
282 Merrimack Street
2nd Floor
Lawrence, MA 01843
978-794-1792
169 Ocean Blvd
PO Box 249
Hampton, NH 03842
603-601-8154
311 Main Street
2nd Floor
Worcester, MA 01608
508-868-5104
www.TheEngineeringCorp.com

DESIGNED BY	WNB
DRAWN BY	SNL
CHECKED BY	PFE
DATE	10/19/2022
SCALE	1" = 20'

PREPARED FOR

City of Lawrence
200 Common Street
Lawrence, MA 01840

REVISIONS

ISSUED FOR

75% Submission

PROJECT TITLE

Lawrence Manchester Rail Corridor (LMRC) Rail Trail

PROJECT LOCATION

City of Lawrence
Essex County, MA

DRAWING TITLE

Proposed Drainage Areas

PROJECT NO.
T0694

TEC CAD FILE
608930_HDS\CONSTRUCTION PLANS\ - Post Drainage Figure.dwg

DRAWING NO.
P-4

SHEET 21 OF 32

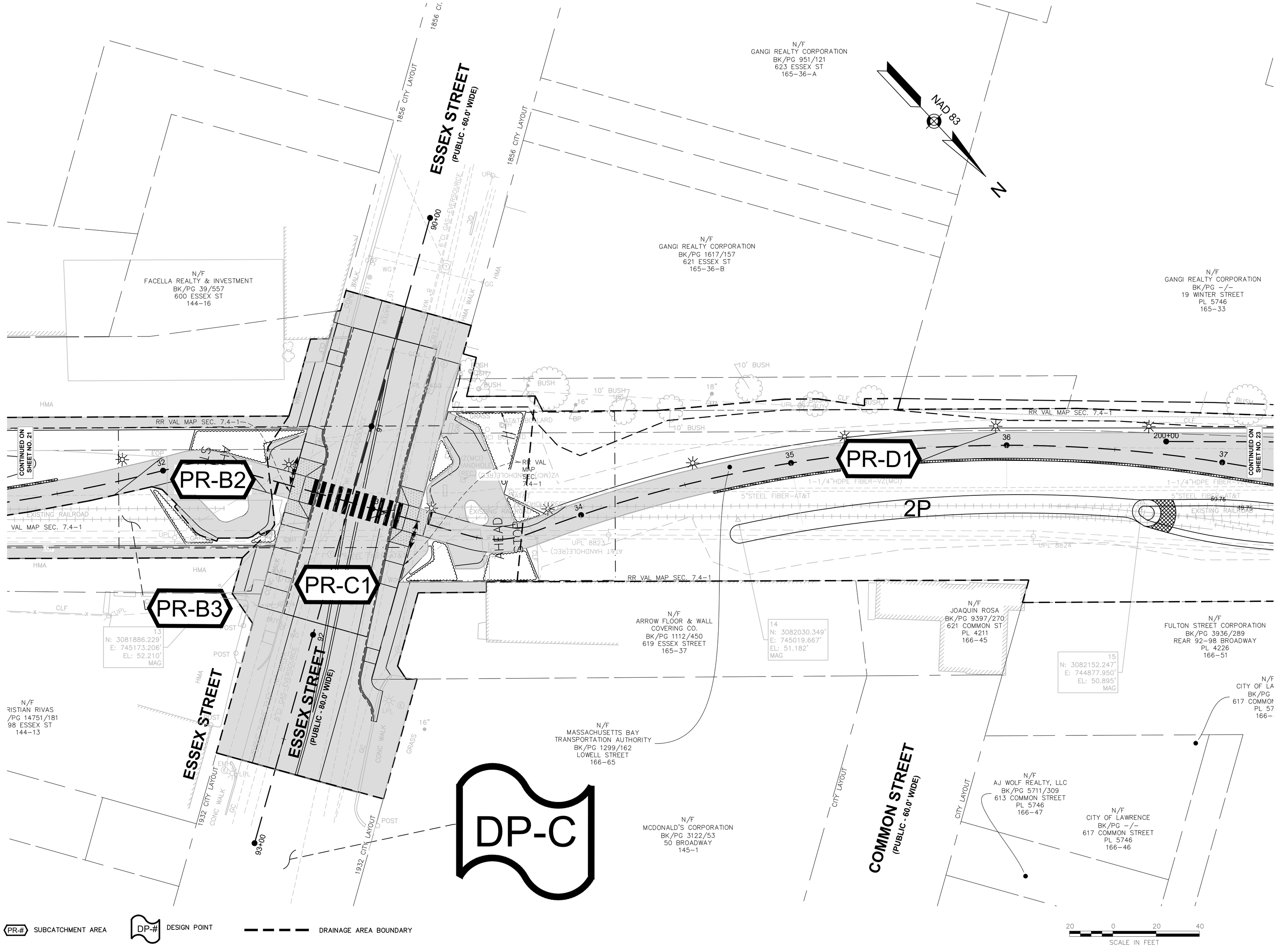

FOR PERMITTING PURPOSES - NOT FOR CONSTRUCTION

TEC, Inc.
282 Merrimack Street
2nd Floor
Lawrence, MA 01843
978-794-1792

169 Ocean Blvd
PO Box 249
Hampton, NH 03842
603-601-8154

311 Main Street
2nd Floor
Worcester, MA 01608
508-868-5104

www.TheEngineeringCorp.com

DESIGNED BY	WNB
DRAWN BY	SNL
CHECKED BY	PFE
DATE	10/19/2022
SCALE	1" = 20'

PREPARED FOR

City of Lawrence
200 Common Street
Lawrence, MA 01840

REVISIONS

ISSUED FOR

75% Submission

PROJECT TITLE

Lawrence Manchester Rail Corridor (LMRC) Rail Trail

PROJECT LOCATION

City of Lawrence
Essex County, MA

DRAWING TITLE

Proposed Drainage Areas

PROJECT NO.
T0694

TEC CAD FILE
608930_HDS(CONSTRUCTION PLANS) - Post Drainage Figure.dwg

DRAWING NO.
P-5

SHEET 22 OF 32

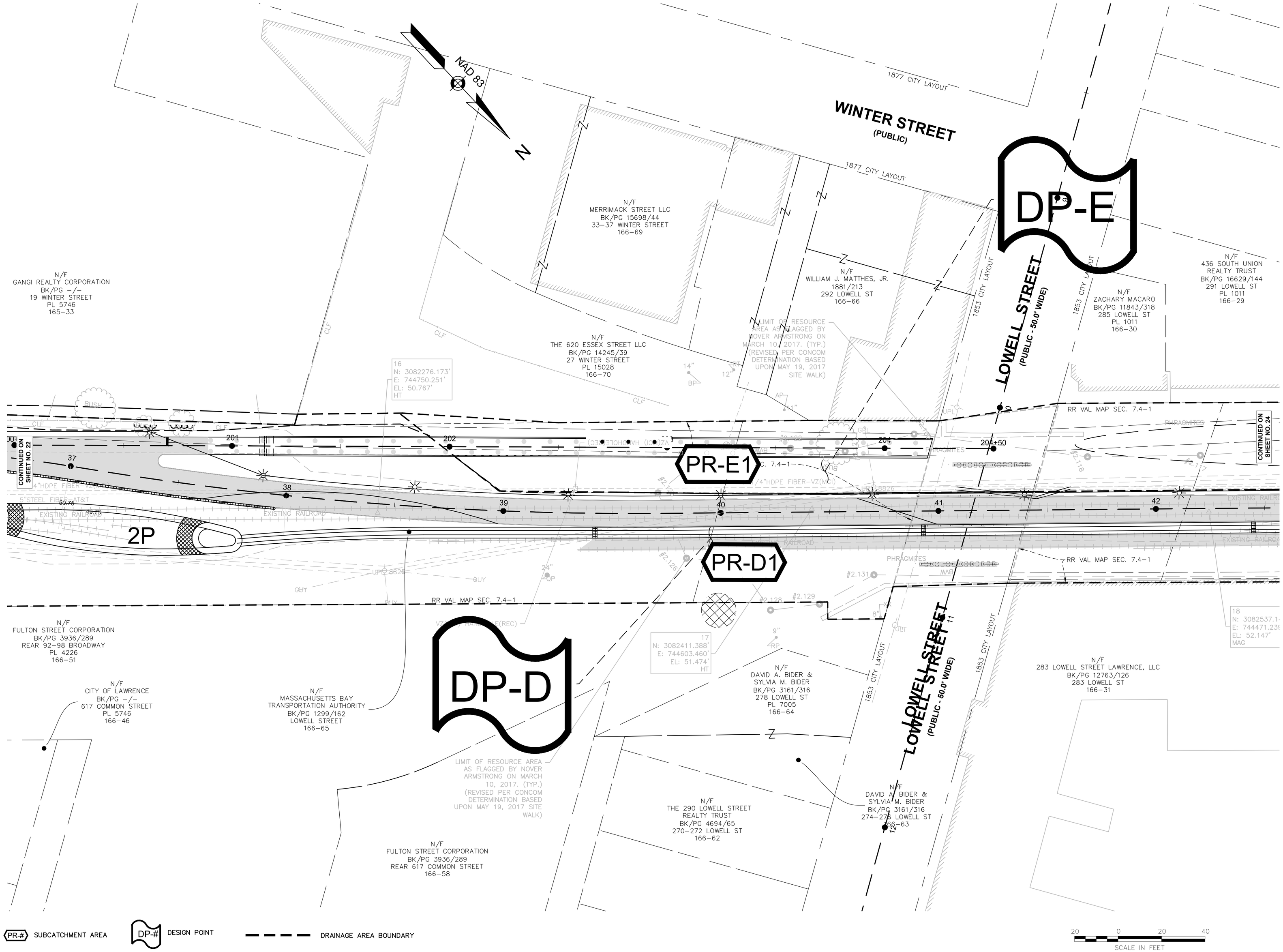

FOR PERMITTING PURPOSES - NOT FOR CONSTRUCTION

TEC, Inc.

282 Merrimack Street
2nd Floor
Lawrence, MA 01843
978-794-1792

169 Ocean Blvd
PO Box 249
Hampton, NH 03842
603-601-8154

311 Main Street
2nd Floor
Worcester, MA 01608
508-868-5104

www.TheEngineeringCorp.com

DESIGNED BY	WNB
DRAWN BY	SNL
CHECKED BY	PFE
DATE	10/19/2022
SCALE	1" = 20'

PREPARED FOR

City of Lawrence
200 Common Street
Lawrence, MA 01840

REVISIONS

ISSUED FOR

75% Submission

PROJECT TITLE

Lawrence Manchester Rail Corridor (LMRC) Rail Trail

PROJECT LOCATION

City of Lawrence
Essex County, MA

DRAWING TITLE

Proposed Drainage Areas

PROJECT NO.
T0694

TEC CAD FILE
608930_HDS\CONSTRUCTION PLANS\ - Post Drainage Figure.dwg

DRAWING NO.
P-6

SHEET 23 OF 32

A00860 - 259

Proposal No. 608930-128034

A00860 - 260

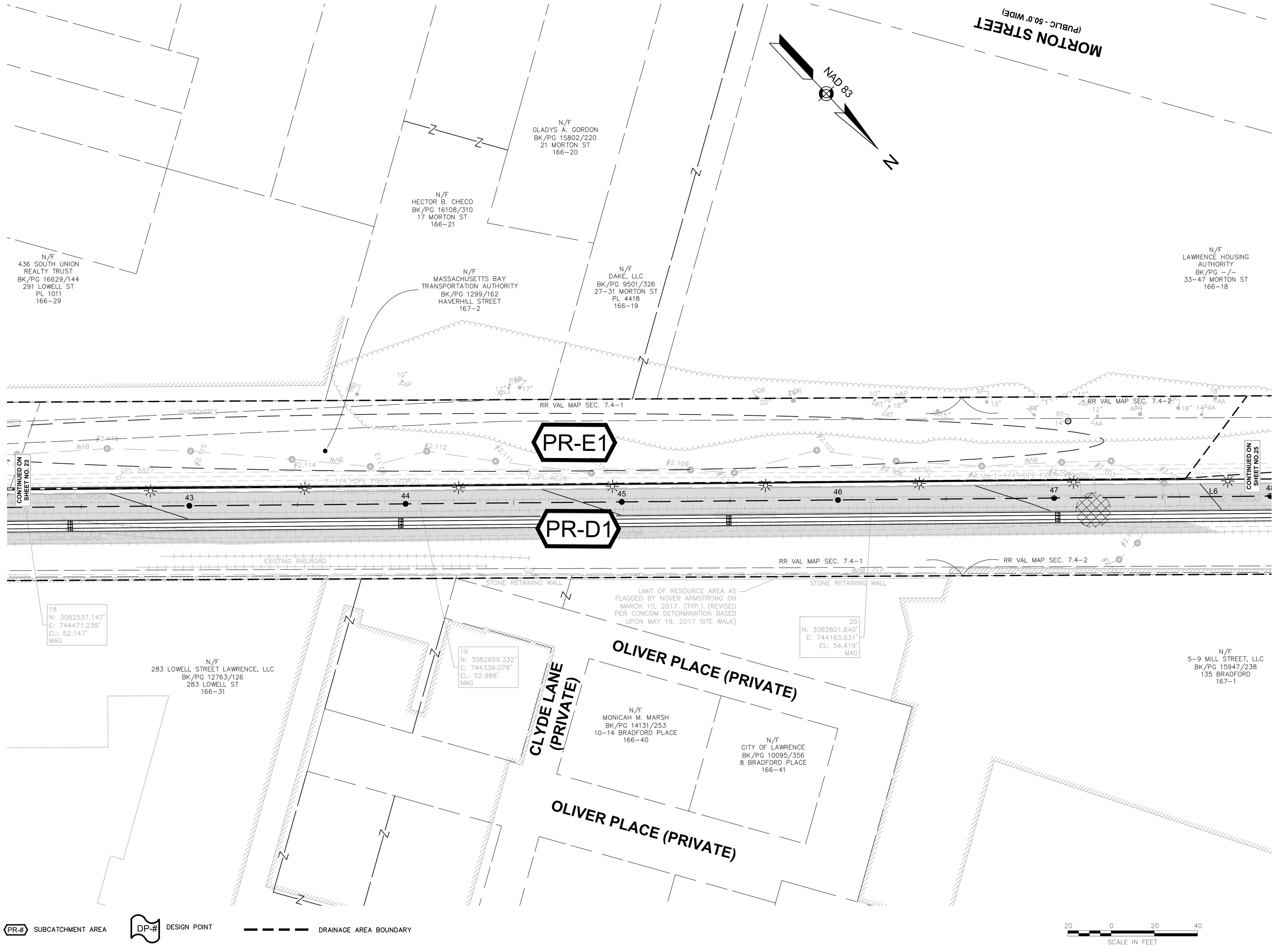

FOR PERMITTING PURPOSES - NOT FOR CONSTRUCTION

TEC, Inc.

282 Merrimack Street
2nd Floor
Lawrence, MA 01843
978-794-1792

169 Ocean Blvd
PO Box 249
Hampton, NH 03842
603-601-8154

311 Main Street
2nd Floor
Worcester, MA 01608
508-868-5104

www.TheEngineeringCorp.com

DESIGNED BY	WNB
DRAWN BY	SNL
CHECKED BY	PFE
DATE	10/19/2022
SCALE	1" = 20'

PREPARED FOR

City of Lawrence
200 Common Street
Lawrence, MA 01840

REVISIONS

ISSUED FOR

75% Submission

PROJECT TITLE

Lawrence Manchester Rail Corridor (LMRC) Rail Trail

PROJECT LOCATION

City of Lawrence
Essex County, MA

DRAWING TITLE

Proposed Drainage Areas

PROJECT NO.
T0694

TEC CAD FILE
608930_H26\CONSTRUCTION PLANS\ - Post Drainage Figure.dwg

DRAWING NO.
P-7

SHEET 24 OF 32

Proposal No. 608930-128034

A00860 - 261

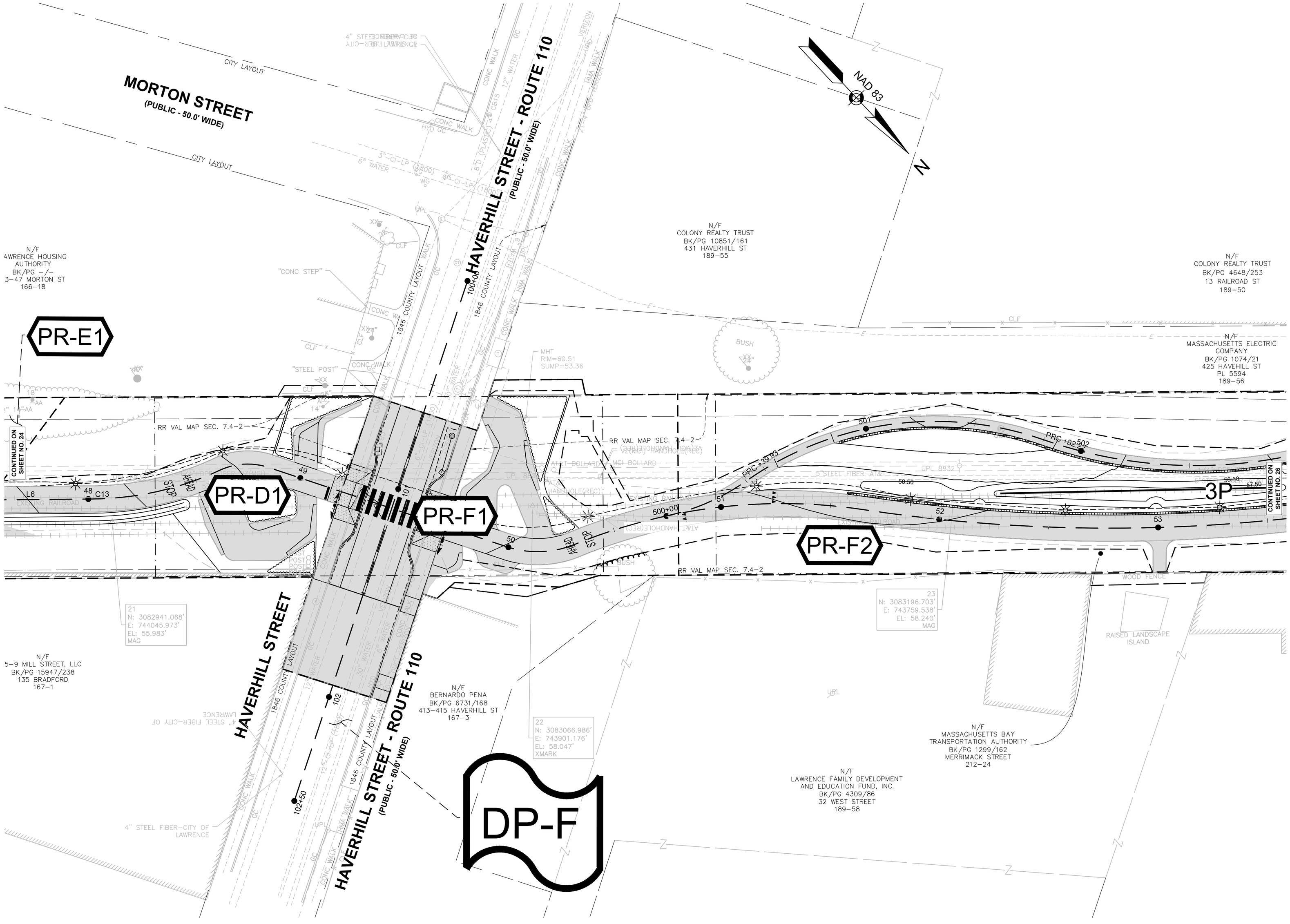

FOR PERMITTING PURPOSES - NOT FOR CONSTRUCTION

TEC
The Engineering Corp
TEC, Inc.
282 Merrimack Street
2nd Floor
Lawrence, MA 01843
978-794-1792

169 Ocean Blvd
PO Box 249
Hampton, NH 03842
603-601-8154

311 Main Street
2nd Floor
Worcester, MA 01608
508-868-5104

www.TheEngineeringCorp.com

DESIGNED BY	WNB
DRAWN BY	SNL
CHECKED BY	PFE
DATE	10/19/2022
SCALE	1" = 20'

PREPARED FOR

City of Lawrence
200 Common Street
Lawrence, MA 01840

REVISIONS

ISSUED FOR

75% Submission

PROJECT TITLE

Lawrence Manchester Rail Corridor (LMRC) Rail Trail

PROJECT LOCATION

City of Lawrence
Essex County, MA

DRAWING TITLE

Proposed Drainage Areas

PROJECT NO.
T0694

TEC CAD FILE
608930_HDS(CONSTRUCTION PLANS) - Post Drainage Figure.dwg

DRAWING NO.
P-8

SHEET 25 OF 32

Proposal No. 608930-128034

A00860 - 262

Proposal No. 608930-128034

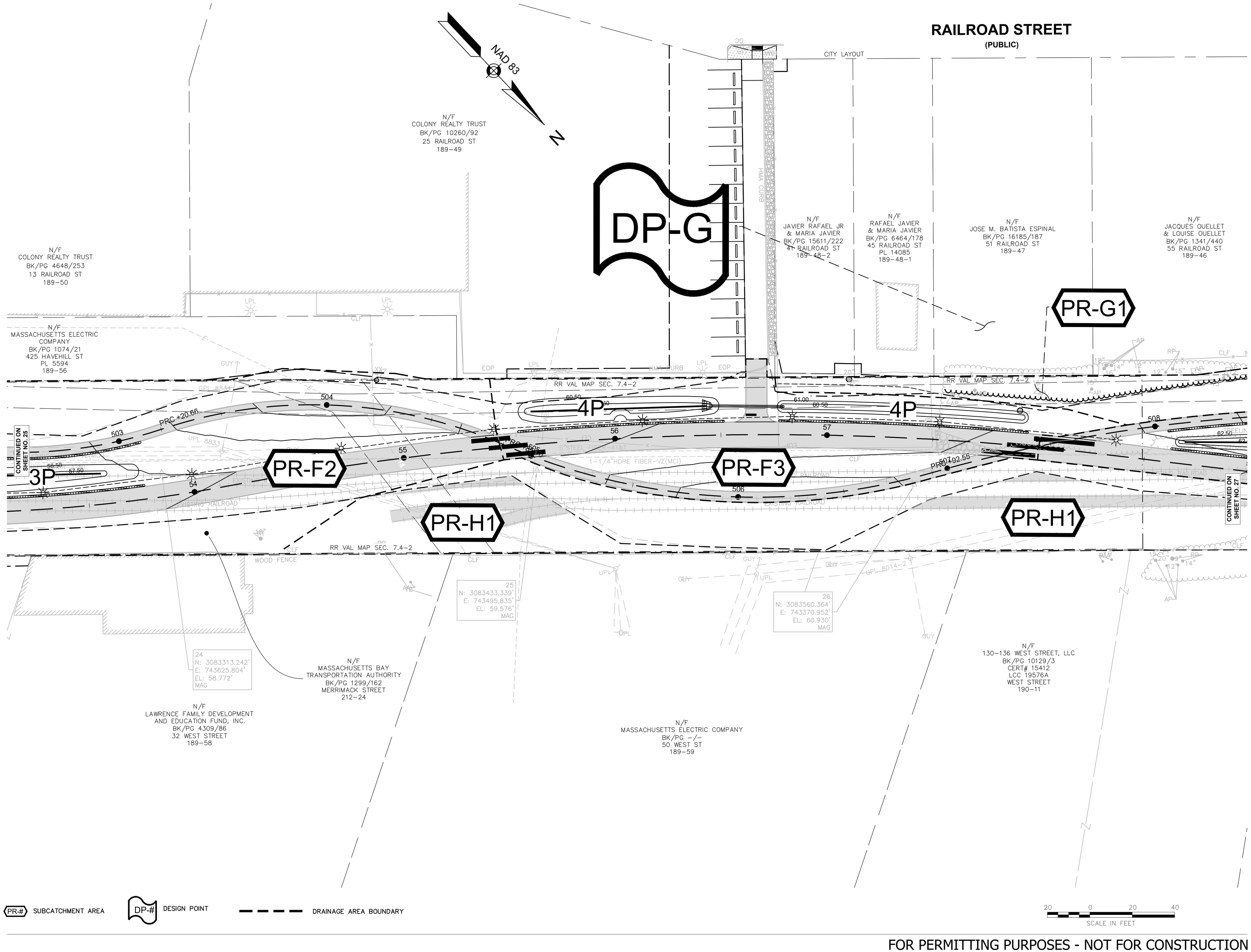

FOR PERMITTING PURPOSES - NOT FOR CONSTRUCTION

TEC
The Engineering Corp

TEC, Inc.

282 Merrimack Street
2nd Floor
Lawrence, MA 01843
978-794-1792

169 Ocean Blvd
PO Box 249
Hampton, NH 03842
603-601-8154

311 Main Street
2nd Floor
Worcester, MA 01608
508-868-5104

www.TheEngineeringCorp.com

DESIGNED BY	WNB
DRAWN BY	SNL
CHECKED BY	PFE
DATE	10/19/2022
SCALE	1" = 20'

PREPARED FOR

City of Lawrence
200 Common Street
Lawrence, MA 01840

REVISIONS

ISSUED FOR

75% Submission

PROJECT TITLE

Lawrence Manchester Rail Corridor (LMRC) Rail Trail

PROJECT LOCATION

City of Lawrence
Essex County, MA

DRAWING TITLE

Proposed Drainage Areas

PROJECT NO.
T0694

TEC CAD FILE
608930_HDS(CONSTRUCTION PLANS) - Post Drainage Figure.dwg

DRAWING NO.
P-9

SHEET 26 OF 32

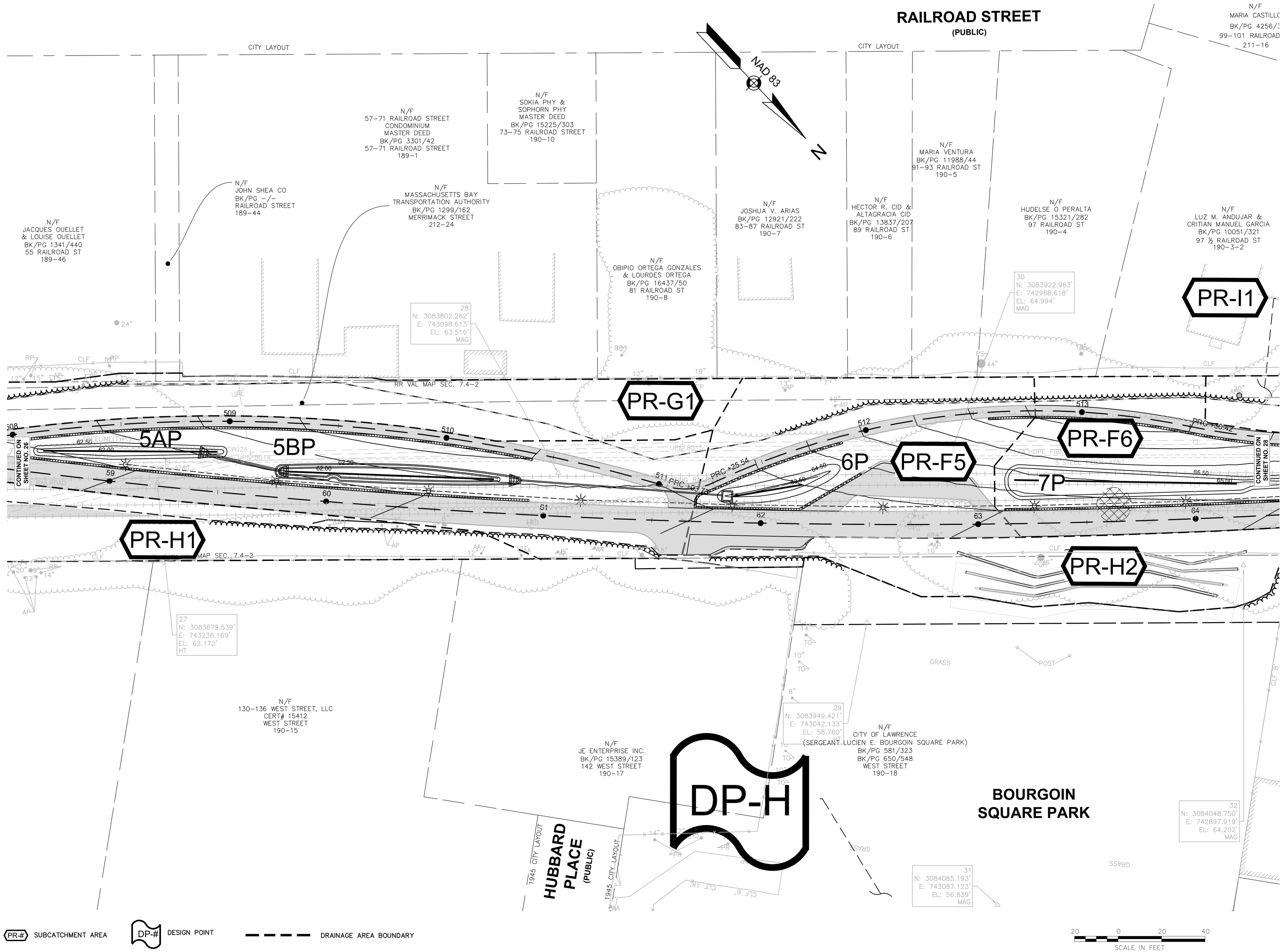

FOR PERMITTING PURPOSES - NOT FOR CONSTRUCTION

TEC
The Engineering Corp

TEC, Inc.

282 Merrimack Street
2nd Floor
Lawrence, MA 01843
978-794-1792

169 Ocean Blvd
PO Box 249
Hampton, NH 03842
603-601-8154

311 Main Street
2nd Floor
Worcester, MA 01608
508-868-5104

www.TheEngineeringCorp.com

DESIGNED BY	WNB
DRAWN BY	SNL
CHECKED BY	PFE
DATE	10/19/2022
SCALE	1" = 20'

PREPARED FOR

City of Lawrence
200 Common Street
Lawrence, MA 01840

REVISIONS

ISSUED FOR

75% Submission

PROJECT TITLE

Lawrence Manchester Rail Corridor (LMRC) Rail Trail

PROJECT LOCATION

City of Lawrence
Essex County, MA

DRAWING TITLE

Proposed Drainage Areas

PROJECT NO.
T0694

TEC CAD FILE
608930_HDS\CONSTRUCTION PLANS\ - Post Drainage Figure.dwg

DRAWING NO.
P-10

SHEET 27 OF 32

A00860 - 263

Proposal No. 608930-128034

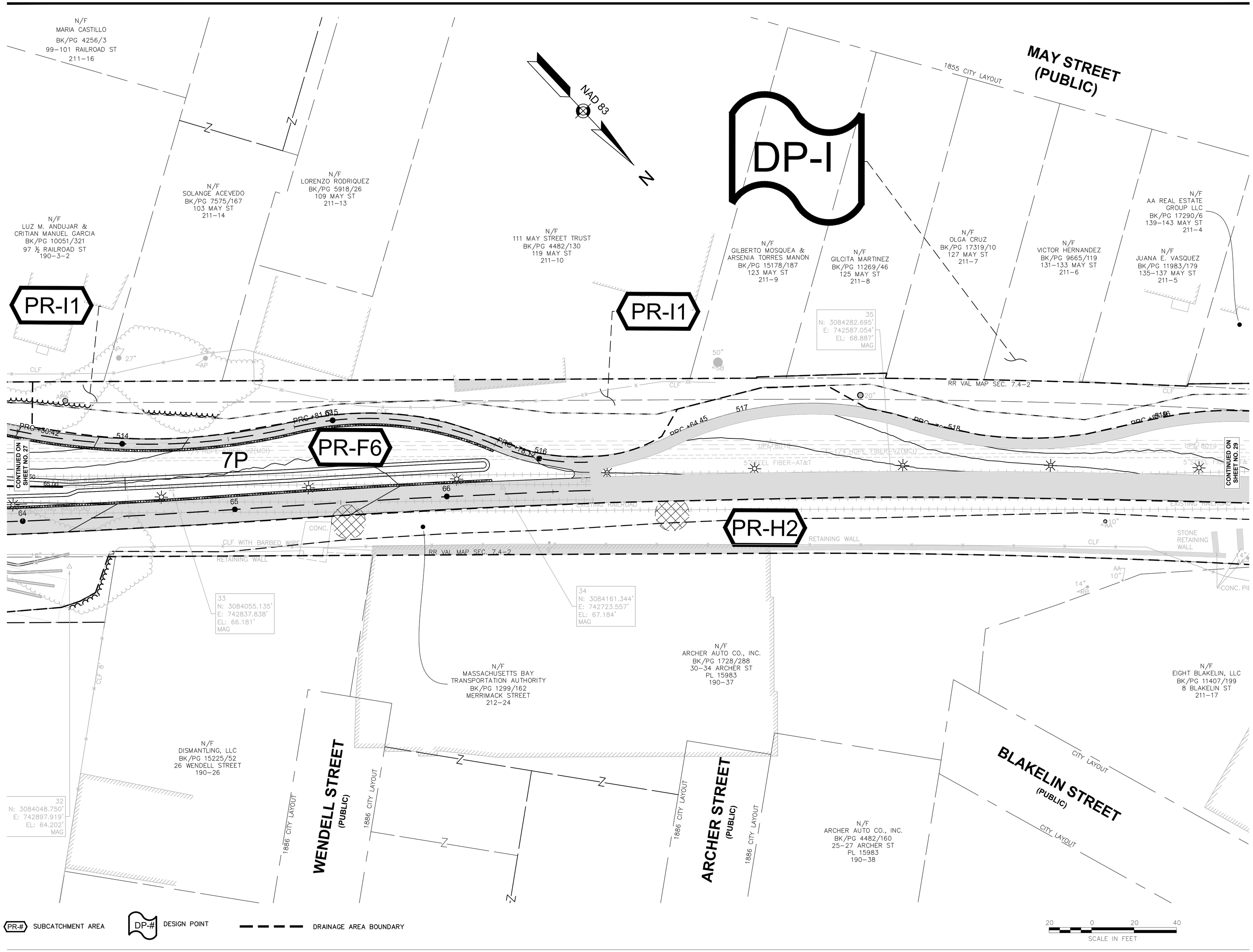

FOR PERMITTING PURPOSES - NOT FOR CONSTRUCTION

TEC
The Engineering Corp
TEC, Inc.
282 Merrimack Street
2nd Floor
Lawrence, MA 01843
978-794-1792
169 Ocean Blvd
PO Box 249
Hampton, NH 03842
603-601-8154
311 Main Street
2nd Floor
Worcester, MA 01608
508-868-5104
www.TheEngineeringCorp.com

DESIGNED BY	WNB
DRAWN BY	SNL
CHECKED BY	PFE
DATE	10/19/2022
SCALE	1" = 20'

PREPARED FOR

City of Lawrence
200 Common Street
Lawrence, MA 01840

REVISIONS

ISSUED FOR

75% Submission

PROJECT TITLE

Lawrence Manchester Rail Corridor (LMRC) Rail Trail

PROJECT LOCATION

City of Lawrence
Essex County, MA

DRAWING TITLE

Proposal No. 608930-128034

Proposed Drainage Areas

PROJECT NO.
T0694

TEC CAD FILE
608930_HDS(CONSTRUCTION PLANS) - Post Drainage Figure.dwg

DRAWING NO.
P-11

SHEET 28 OF 32

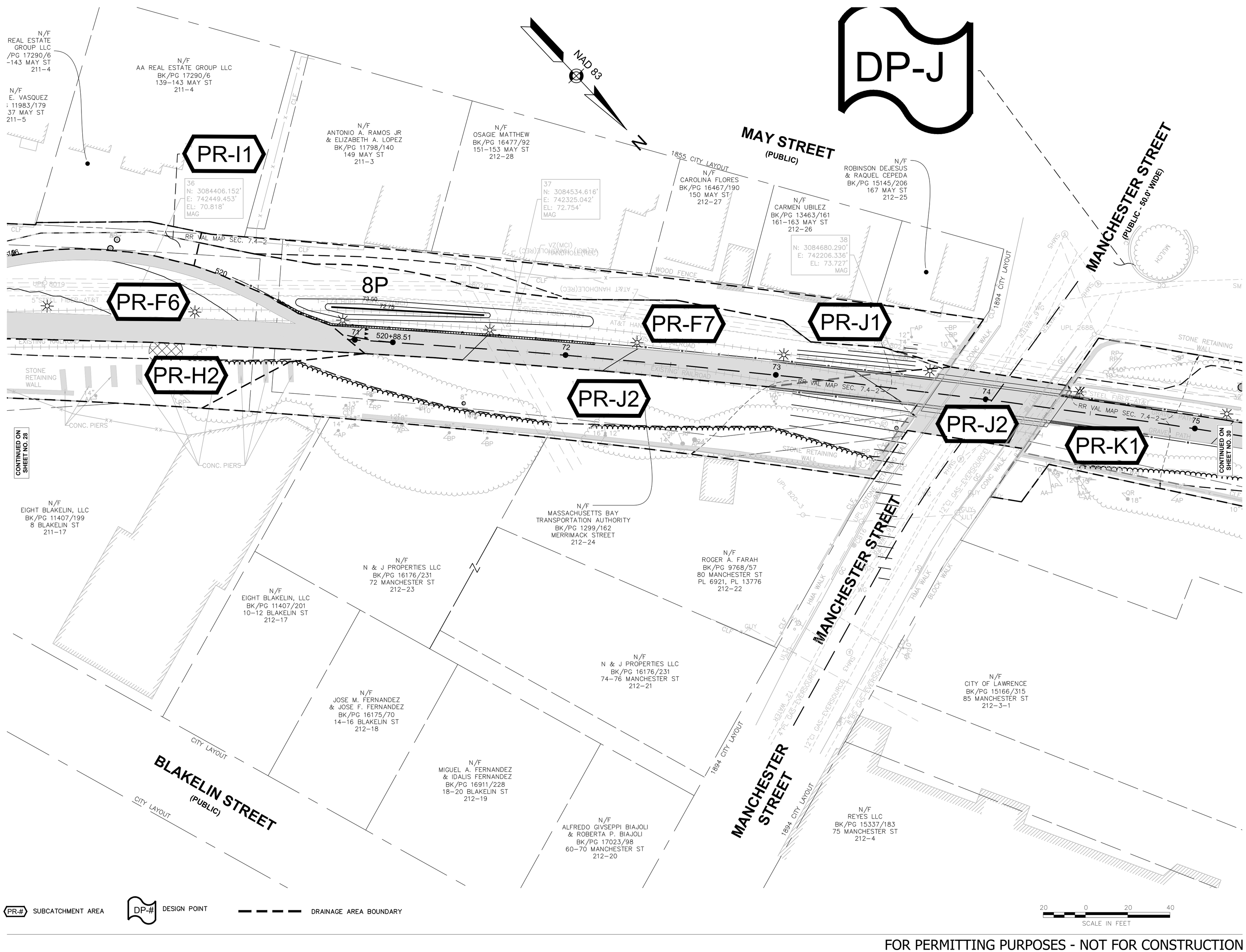

FOR PERMITTING PURPOSES - NOT FOR CONSTRUCTION

TEC
The Engineering Corp
TEC, Inc.
282 Merrimack Street
2nd Floor
Lawrence, MA 01843
978-794-1792
169 Ocean Blvd
PO Box 249
Hampton, NH 03842
603-601-8154
311 Main Street
2nd Floor
Worcester, MA 01608
508-868-5104
www.TheEngineeringCorp.com

DESIGNED BY	WNB
DRAWN BY	SNL
CHECKED BY	PFE
DATE	10/19/2022
SCALE	1" = 20'

PREPARED FOR

City of Lawrence
200 Common Street
Lawrence, MA 01840

REVISIONS

ISSUED FOR

75% Submission

PROJECT TITLE

Lawrence Manchester Rail Corridor (LMRC) Rail Trail

PROJECT LOCATION

City of Lawrence
Essex County, MA

DRAWING TITLE

Proposed Drainage Areas

PROJECT NO.
T0694

TEC CAD FILE
608930_H09(CONSTRUCTION PLANS) - Post Drainage Figure.dwg

DRAWING NO.
P-12

SHEET 29 OF 32

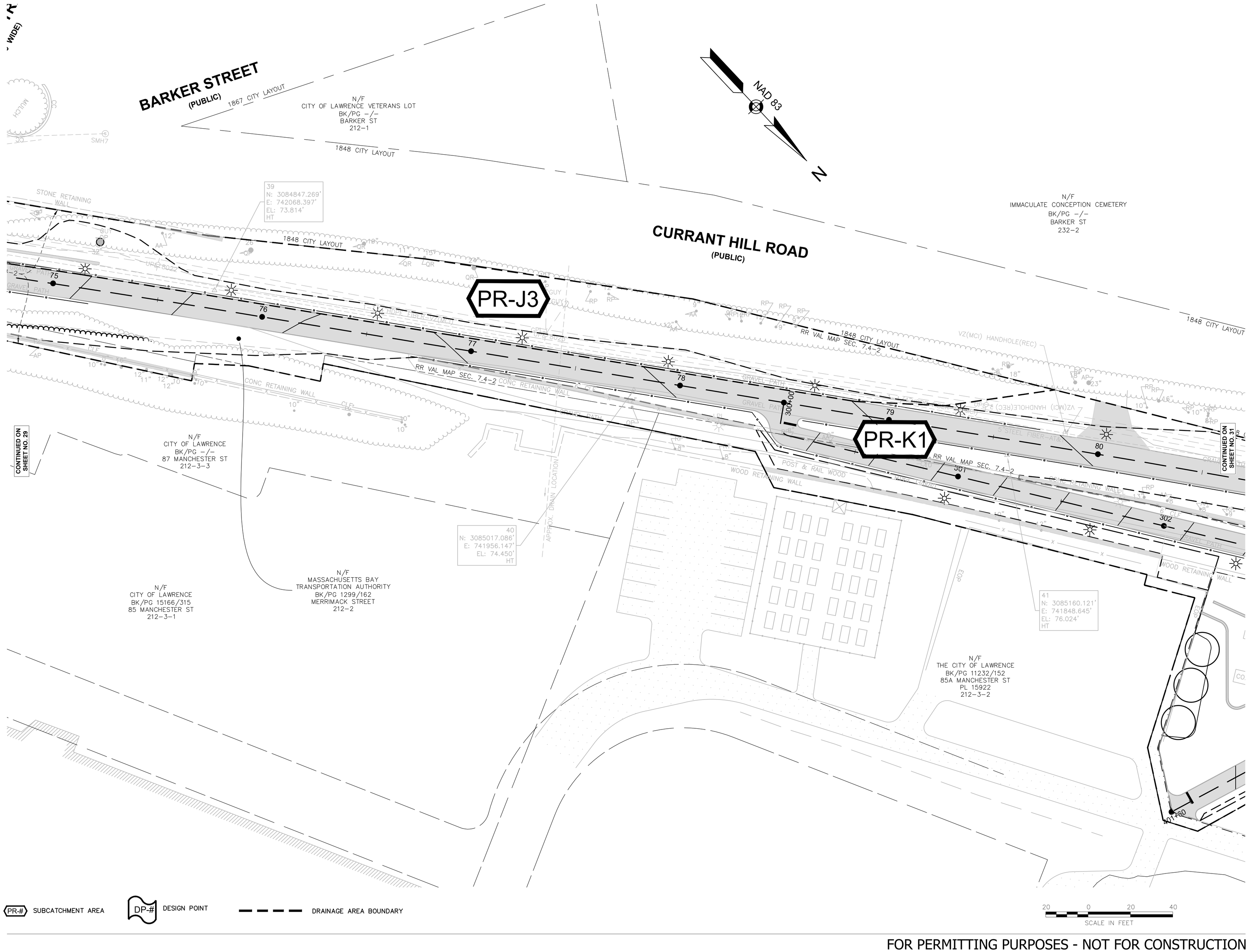

FOR PERMITTING PURPOSES - NOT FOR CONSTRUCTION

TEC, Inc.

282 Merrimack Street
2nd Floor
Lawrence, MA 01843
978-794-1792

169 Ocean Blvd
PO Box 249
Hampton, NH 03842
603-601-8154

311 Main Street
2nd Floor
Worcester, MA 01608
508-868-5104

www.TheEngineeringCorp.com

DESIGNED BY	WNB
DRAWN BY	SNL
CHECKED BY	PFE
DATE	10/19/2022
SCALE	1" = 20'

PREPARED FOR

City of Lawrence
200 Common Street
Lawrence, MA 01840

REVISIONS

ISSUED FOR

75% Submission

PROJECT TITLE

Lawrence Manchester Rail Corridor (LMRC) Rail Trail

PROJECT LOCATION

City of Lawrence
Essex County, MA

DRAWING TITLE

Proposed Drainage Areas

PROJECT NO.
T0694

TEC CAD FILE
608930_HDS\CONSTRUCTION PLANS\ - Post Drainage Figure.dwg

DRAWING NO.
P-13

SHEET 30 OF 32

A00860 - 266

Proposal No. 608930-128034

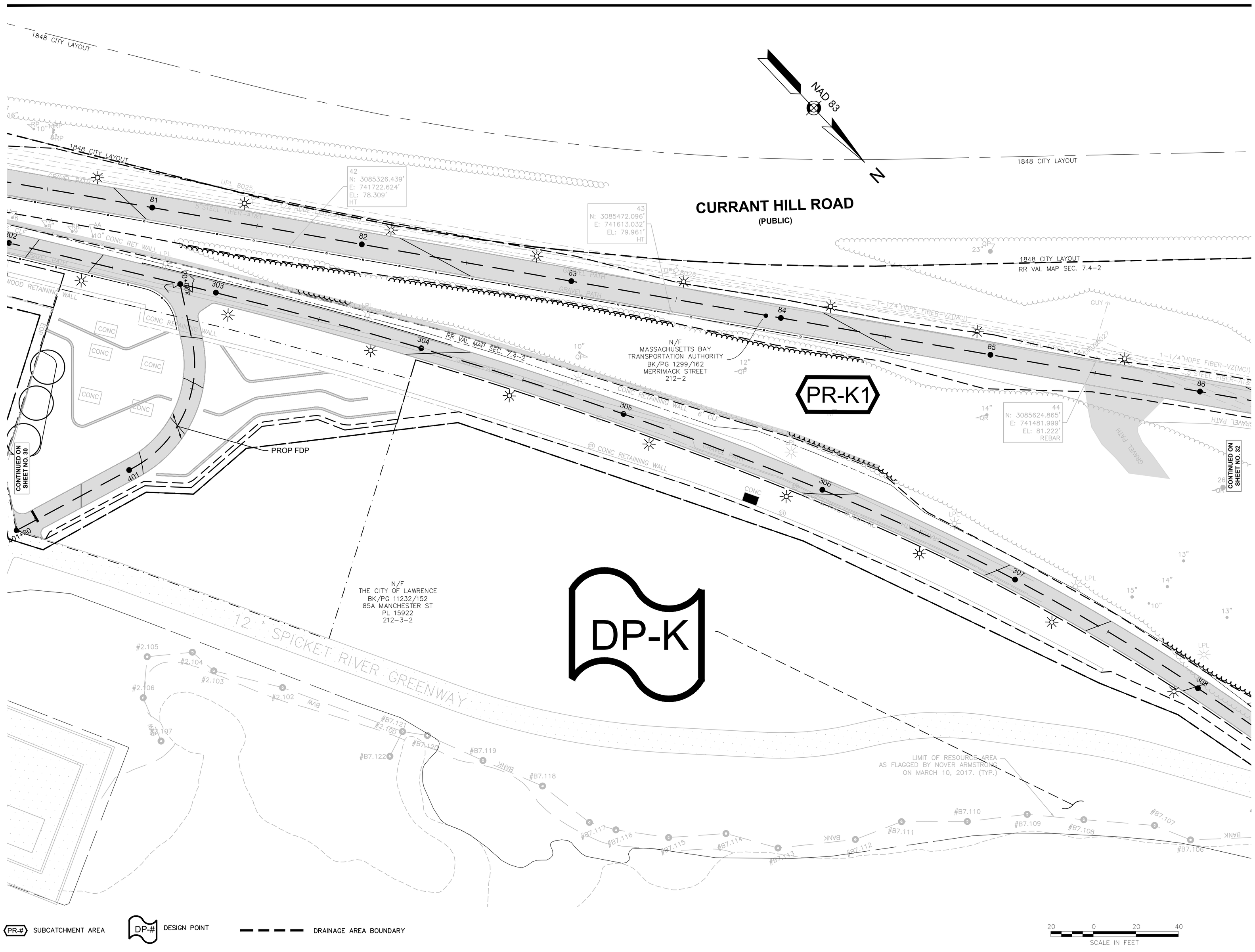

FOR PERMITTING PURPOSES - NOT FOR CONSTRUCTION

TEC
The Engineering Corp
TEC, Inc.
282 Merrimack Street
2nd Floor
Lawrence, MA 01843
978-794-1792

169 Ocean Blvd
PO Box 249
Hampton, NH 03842
603-601-8154

311 Main Street
2nd Floor
Worcester, MA 01608
508-868-5104

www.TheEngineeringCorp.com

DESIGNED BY	WNB
DRAWN BY	SNL
CHECKED BY	PFE
DATE	10/19/2022
SCALE	1" = 20'

PREPARED FOR

City of Lawrence
200 Common Street
Lawrence, MA 01840

REVISIONS

ISSUED FOR

75% Submission

PROJECT TITLE

Lawrence Manchester Rail Corridor (LMRC) Rail Trail

PROJECT LOCATION

City of Lawrence
Essex County, MA

DRAWING TITLE

Proposal No. 608930-128034

Proposed Drainage Areas

PROJECT NO.
T0694

TEC CAD FILE
608930_H09(CONSTRUCTION PLANS) - Post Drainage Figure.dwg

DRAWING NO.
P-14

SHEET 31 OF 32

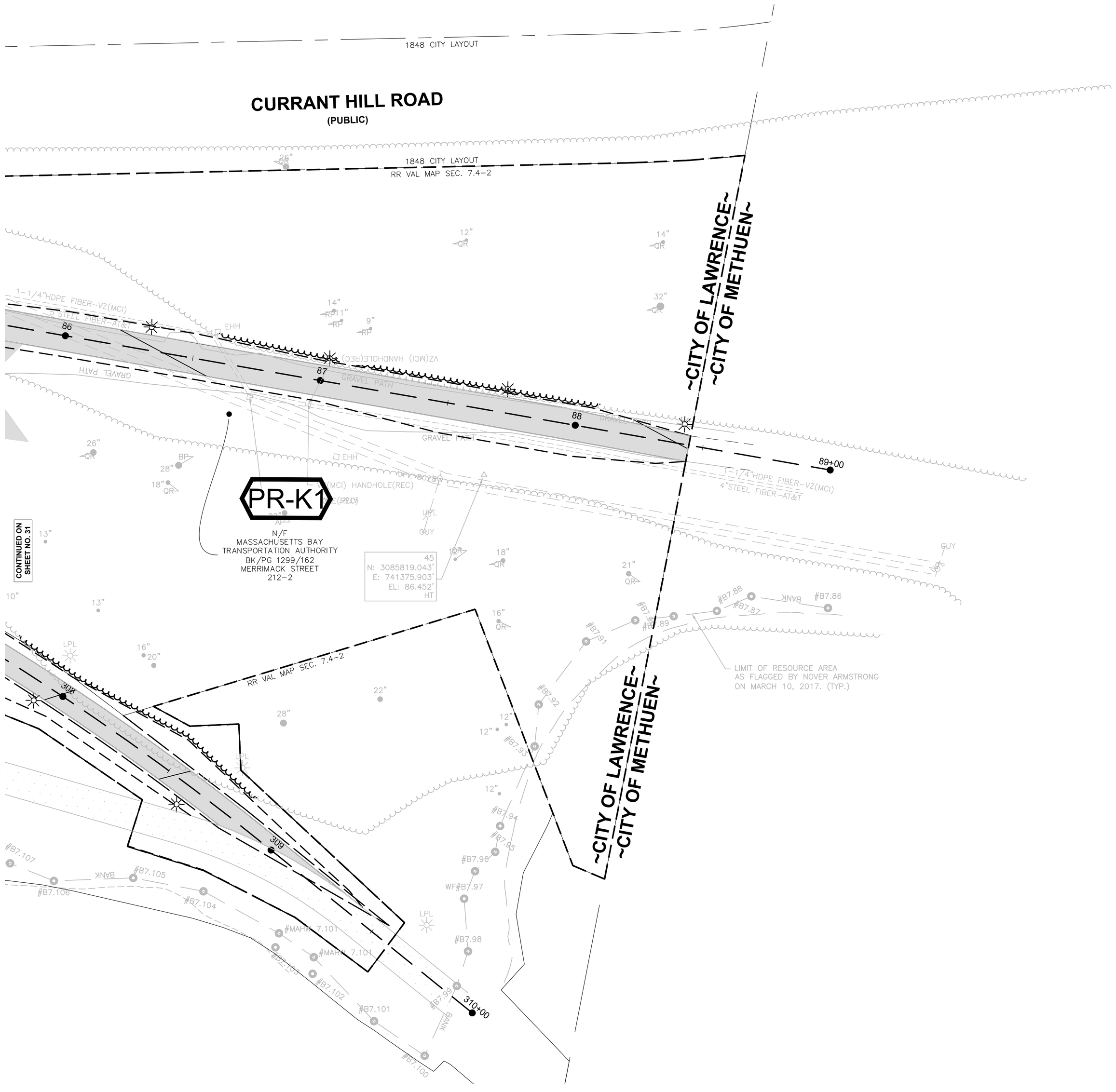

PR-# SUBCATCHMENT AREA

DP-# DESIGN POINT

DRAINAGE AREA BOUNDARY

20 0 20 40
SCALE IN FEET

FOR PERMITTING PURPOSES - NOT FOR CONSTRUCTION

TEC, Inc.

282 Merrimack Street
2nd Floor
Lawrence, MA 01843
978-794-1792

169 Ocean Blvd
PO Box 249
Hampton, NH 03842
603-601-8154

311 Main Street
2nd Floor
Worcester, MA 01608
508-868-5104

www.TheEngineeringCorp.com

DESIGNED BY	WNB
DRAWN BY	SNL
CHECKED BY	PFE
DATE	10/19/2022
SCALE	1" = 20'

PREPARED FOR

City of Lawrence
200 Common Street
Lawrence, MA 01840

REVISIONS

ISSUED FOR

75% Submission

PROJECT TITLE

Lawrence Manchester Rail Corridor (LMRC) Rail Trail

PROJECT LOCATION

City of Lawrence
Essex County, MA

DRAWING TITLE

Proposed Drainage Areas

PROJECT NO.
T0694

TEC CAD FILE
608930_H05(CONSTRUCTION PLANS) - Post Drainage Figure.dwg

DRAWING NO.
P-15

SHEET 32 OF 32

A00860 - 268

Proposal No. 608930-128034

2

Appendix

A

Hydrologic Calculations

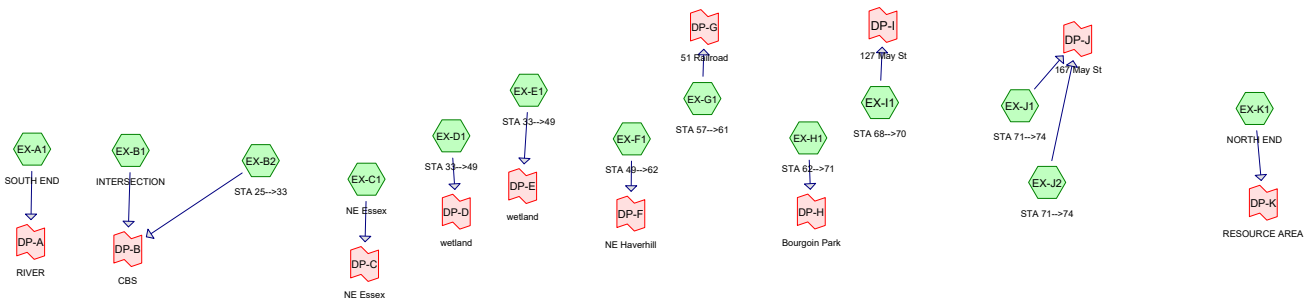

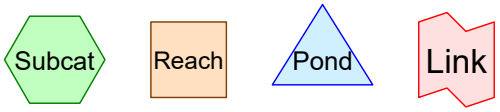

Routing Diagram for T0694_Pre-Drainage
Prepared by IO, Printed 10/17/2022
HydroCAD® 10.00-26 s/n 02793 © 2020 HydroCAD Software Solutions LLC

T0694_Pre-Drainage
Prepared by IO
Printed 10/17/2022
HydroCAD® 10.00-26 s/n 02793 © 2020 HydroCAD Software Solutions LLC

Area Listing (all nodes)

Area (acres)	CN	Description (subcatchment-numbers)
7.211	49	50-75% Grass cover, Fair, HSG A (EX-B1, EX-F1, EX-G1, EX-H1, EX-I1, EX-J1, EX-J2, EX-K1)
3.573	69	50-75% Grass cover, Fair, HSG B (EX-A1, EX-B2, EX-C1, EX-D1, EX-E1)
1.180	96	Gravel surface, HSG A (EX-F1, EX-H1, EX-J1, EX-J2, EX-K1)
0.653	96	Gravel surface, HSG B (EX-A1, EX-B2, EX-D1)
0.891	98	Paved parking, HSG A (EX-B1, EX-F1, EX-G1, EX-H1, EX-J1, EX-J2, EX-K1)
1.764	98	Paved parking, HSG B (EX-A1, EX-B2, EX-C1, EX-D1, EX-E1)
15.271	**68**	**TOTAL AREA**

Summary for Subcatchment EX-A1: SOUTH END

Runoff = 2.64 cfs @ 12.09 hrs, Volume= 0.187 af, Depth= 1.68"

Runoff by SCS TR-20 method, UH=SCS, Weighted-CN, Time Span= 0.00-48.00 hrs, dt= 0.01 hrs
Type III 24-hr 2-Year Rainfall=3.11"

Area (sf)	CN	Description
24,720	69	50-75% Grass cover, Fair, HSG B
25,382	98	Paved parking, HSG B
8,130	96	Gravel surface, HSG B
58,232	85	Weighted Average
32,850		56.41% Pervious Area
25,382		43.59% Impervious Area

Tc (min)	Length (feet)	Slope (ft/ft)	Velocity (ft/sec)	Capacity (cfs)	Description
6.0					**Direct Entry, Direct**

Summary for Subcatchment EX-B1: INTERSECTION

Runoff = 1.40 cfs @ 12.08 hrs, Volume= 0.111 af, Depth= 2.88"

Runoff by SCS TR-20 method, UH=SCS, Weighted-CN, Time Span= 0.00-48.00 hrs, dt= 0.01 hrs
Type III 24-hr 2-Year Rainfall=3.11"

Area (sf)	CN	Description
204	49	50-75% Grass cover, Fair, HSG A
20,018	98	Paved parking, HSG A
20,222	98	Weighted Average
204		1.01% Pervious Area
20,018		98.99% Impervious Area

Tc (min)	Length (feet)	Slope (ft/ft)	Velocity (ft/sec)	Capacity (cfs)	Description
6.0					**Direct Entry, Direct**

Summary for Subcatchment EX-B2: STA 25-->33

Runoff = 2.94 cfs @ 12.09 hrs, Volume= 0.210 af, Depth= 2.00"

Runoff by SCS TR-20 method, UH=SCS, Weighted-CN, Time Span= 0.00-48.00 hrs, dt= 0.01 hrs
Type III 24-hr 2-Year Rainfall=3.11"

Area (sf)	CN	Description
17,180	69	50-75% Grass cover, Fair, HSG B
33,434	98	Paved parking, HSG B
4,302	96	Gravel surface, HSG B
54,916	89	Weighted Average
21,482		39.12% Pervious Area
33,434		60.88% Impervious Area

Tc (min)	Length (feet)	Slope (ft/ft)	Velocity (ft/sec)	Capacity (cfs)	Description
6.0					**Direct Entry, Direct**

Summary for Subcatchment EX-C1: NE Essex

Runoff = 1.12 cfs @ 12.08 hrs, Volume= 0.089 af, Depth= 2.88"

Runoff by SCS TR-20 method, UH=SCS, Weighted-CN, Time Span= 0.00-48.00 hrs, dt= 0.01 hrs
Type III 24-hr 2-Year Rainfall=3.11"

Area (sf)	CN	Description
40	69	50-75% Grass cover, Fair, HSG B
16,171	98	Paved parking, HSG B
16,211	98	Weighted Average
40		0.25% Pervious Area
16,171		99.75% Impervious Area

Tc (min)	Length (feet)	Slope (ft/ft)	Velocity (ft/sec)	Capacity (cfs)	Description
6.0					**Direct Entry, Direct**

Summary for Subcatchment EX-D1: STA 33-->49

Runoff = 2.43 cfs @ 12.10 hrs, Volume= 0.183 af, Depth= 0.98"

Runoff by SCS TR-20 method, UH=SCS, Weighted-CN, Time Span= 0.00-48.00 hrs, dt= 0.01 hrs
Type III 24-hr 2-Year Rainfall=3.11"

Area (sf)	CN	Description
80,039	69	50-75% Grass cover, Fair, HSG B
1,757	98	Paved parking, HSG B
16,024	96	Gravel surface, HSG B
97,820	74	Weighted Average
96,063		98.20% Pervious Area
1,757		1.80% Impervious Area

Tc (min)	Length (feet)	Slope (ft/ft)	Velocity (ft/sec)	Capacity (cfs)	Description
6.0					**Direct Entry, Direct**

Summary for Subcatchment EX-E1: STA 33-->49

Runoff = 0.57 cfs @ 12.10 hrs, Volume= 0.047 af, Depth= 0.73"

Runoff by SCS TR-20 method, UH=SCS, Weighted-CN, Time Span= 0.00-48.00 hrs, dt= 0.01 hrs
Type III 24-hr 2-Year Rainfall=3.11"

Area (sf)	CN	Description
33,654	69	50-75% Grass cover, Fair, HSG B
76	98	Paved parking, HSG B
33,730	69	Weighted Average
33,654		99.77% Pervious Area
76		0.23% Impervious Area

Tc (min)	Length (feet)	Slope (ft/ft)	Velocity (ft/sec)	Capacity (cfs)	Description
6.0					**Direct Entry, Direct**

Summary for Subcatchment EX-F1: STA 49-->62

Runoff = 0.43 cfs @ 12.14 hrs, Volume= 0.063 af, Depth= 0.34"

Runoff by SCS TR-20 method, UH=SCS, Weighted-CN, Time Span= 0.00-48.00 hrs, dt= 0.01 hrs
Type III 24-hr 2-Year Rainfall=3.11"

Area (sf)	CN	Description
76,325	49	50-75% Grass cover, Fair, HSG A
7,070	98	Paved parking, HSG A
13,731	96	Gravel surface, HSG A
97,126	59	Weighted Average
90,056		92.72% Pervious Area
7,070		7.28% Impervious Area

Tc (min)	Length (feet)	Slope (ft/ft)	Velocity (ft/sec)	Capacity (cfs)	Description
6.0					**Direct Entry, Direct**

Summary for Subcatchment EX-G1: STA 57-->61

Runoff = 0.04 cfs @ 12.16 hrs, Volume= 0.006 af, Depth= 0.31"

Runoff by SCS TR-20 method, UH=SCS, Weighted-CN, Time Span= 0.00-48.00 hrs, dt= 0.01 hrs
Type III 24-hr 2-Year Rainfall=3.11"

Area (sf)	CN	Description
8,534	49	50-75% Grass cover, Fair, HSG A
1,922	98	Paved parking, HSG A
10,456	58	Weighted Average
8,534		81.62% Pervious Area
1,922		18.38% Impervious Area

Tc (min)	Length (feet)	Slope (ft/ft)	Velocity (ft/sec)	Capacity (cfs)	Description
6.0					**Direct Entry, Direct**

Summary for Subcatchment EX-H1: STA 62-->71

Runoff = 0.23 cfs @ 12.30 hrs, Volume= 0.042 af, Depth= 0.28"

Runoff by SCS TR-20 method, UH=SCS, Weighted-CN, Time Span= 0.00-48.00 hrs, dt= 0.01 hrs
Type III 24-hr 2-Year Rainfall=3.11"

Area (sf)	CN	Description
64,584	49	50-75% Grass cover, Fair, HSG A
3,471	98	Paved parking, HSG A
10,602	96	Gravel surface, HSG A
78,657	57	Weighted Average
75,186		95.59% Pervious Area
3,471		4.41% Impervious Area

Tc (min)	Length (feet)	Slope (ft/ft)	Velocity (ft/sec)	Capacity (cfs)	Description
6.0					**Direct Entry, Direct**

Summary for Subcatchment EX-I1: STA 68-->70

Runoff = 0.00 cfs @ 13.78 hrs, Volume= 0.001 af, Depth= 0.09"

Runoff by SCS TR-20 method, UH=SCS, Weighted-CN, Time Span= 0.00-48.00 hrs, dt= 0.01 hrs
Type III 24-hr 2-Year Rainfall=3.11"

Area (sf)	CN	Description
3,259	49	50-75% Grass cover, Fair, HSG A
3,259		100.00% Pervious Area

Tc (min)	Length (feet)	Slope (ft/ft)	Velocity (ft/sec)	Capacity (cfs)	Description
6.0					**Direct Entry, Direct**

Summary for Subcatchment EX-J1: STA 71-->74

Runoff = 0.12 cfs @ 12.14 hrs, Volume= 0.018 af, Depth= 0.34"

Runoff by SCS TR-20 method, UH=SCS, Weighted-CN, Time Span= 0.00-48.00 hrs, dt= 0.01 hrs
Type III 24-hr 2-Year Rainfall=3.11"

Area (sf)	CN	Description
21,462	49	50-75% Grass cover, Fair, HSG A
2,036	98	Paved parking, HSG A
3,914	96	Gravel surface, HSG A
27,412	59	Weighted Average
25,376		92.57% Pervious Area
2,036		7.43% Impervious Area

Tc (min)	Length (feet)	Slope (ft/ft)	Velocity (ft/sec)	Capacity (cfs)	Description
6.0					**Direct Entry, Direct**

Summary for Subcatchment EX-J2: STA 71-->74

Runoff = 0.02 cfs @ 12.35 hrs, Volume= 0.005 af, Depth= 0.22"

Runoff by SCS TR-20 method, UH=SCS, Weighted-CN, Time Span= 0.00-48.00 hrs, dt= 0.01 hrs
Type III 24-hr 2-Year Rainfall=3.11"

Area (sf)	CN	Description
10,314	49	50-75% Grass cover, Fair, HSG A
612	98	Paved parking, HSG A
1,004	96	Gravel surface, HSG A
11,930	55	Weighted Average
11,318		94.87% Pervious Area
612		5.13% Impervious Area

Tc (min)	Length (feet)	Slope (ft/ft)	Velocity (ft/sec)	Capacity (cfs)	Description
6.0					**Direct Entry, Direct**

Summary for Subcatchment EX-K1: NORTH END

Runoff = 0.45 cfs @ 12.30 hrs, Volume= 0.083 af, Depth= 0.28"

Runoff by SCS TR-20 method, UH=SCS, Weighted-CN, Time Span= 0.00-48.00 hrs, dt= 0.01 hrs
Type III 24-hr 2-Year Rainfall=3.11"

Area (sf)	CN	Description
129,424	49	50-75% Grass cover, Fair, HSG A
3,669	98	Paved parking, HSG A
22,129	96	Gravel surface, HSG A
155,222	57	Weighted Average
151,553		97.64% Pervious Area
3,669		2.36% Impervious Area

Tc (min)	Length (feet)	Slope (ft/ft)	Velocity (ft/sec)	Capacity (cfs)	Description
6.0					**Direct Entry, Direct**

Summary for Link DP-A: RIVER

Inflow Area = 1.337 ac, 43.59% Impervious, Inflow Depth = 1.68" for 2-Year event
Inflow = 2.64 cfs @ 12.09 hrs, Volume= 0.187 af
Primary = 2.64 cfs @ 12.09 hrs, Volume= 0.187 af, Atten= 0%, Lag= 0.0 min

Primary outflow = Inflow, Time Span= 0.00-48.00 hrs, dt= 0.01 hrs

Summary for Link DP-B: CBS

Inflow Area = 1.725 ac, 71.14% Impervious, Inflow Depth = 2.24" for 2-Year event
Inflow = 4.34 cfs @ 12.09 hrs, Volume= 0.321 af
Primary = 4.34 cfs @ 12.09 hrs, Volume= 0.321 af, Atten= 0%, Lag= 0.0 min

Primary outflow = Inflow, Time Span= 0.00-48.00 hrs, dt= 0.01 hrs

Summary for Link DP-C: NE Essex

Inflow Area = 0.372 ac, 99.75% Impervious, Inflow Depth = 2.88" for 2-Year event
Inflow = 1.12 cfs @ 12.08 hrs, Volume= 0.089 af
Primary = 1.12 cfs @ 12.08 hrs, Volume= 0.089 af, Atten= 0%, Lag= 0.0 min

Primary outflow = Inflow, Time Span= 0.00-48.00 hrs, dt= 0.01 hrs

Summary for Link DP-D: wetland

Inflow Area = 2.246 ac, 1.80% Impervious, Inflow Depth = 0.98" for 2-Year event
Inflow = 2.43 cfs @ 12.10 hrs, Volume= 0.183 af
Primary = 2.43 cfs @ 12.10 hrs, Volume= 0.183 af, Atten= 0%, Lag= 0.0 min

Primary outflow = Inflow, Time Span= 0.00-48.00 hrs, dt= 0.01 hrs

Summary for Link DP-E: wetland

Inflow Area = 0.774 ac, 0.23% Impervious, Inflow Depth = 0.73" for 2-Year event
Inflow = 0.57 cfs @ 12.10 hrs, Volume= 0.047 af
Primary = 0.57 cfs @ 12.10 hrs, Volume= 0.047 af, Atten= 0%, Lag= 0.0 min

Primary outflow = Inflow, Time Span= 0.00-48.00 hrs, dt= 0.01 hrs

Summary for Link DP-F: NE Haverhill

Inflow Area = 2.230 ac, 7.28% Impervious, Inflow Depth = 0.34" for 2-Year event
Inflow = 0.43 cfs @ 12.14 hrs, Volume= 0.063 af
Primary = 0.43 cfs @ 12.14 hrs, Volume= 0.063 af, Atten= 0%, Lag= 0.0 min

Primary outflow = Inflow, Time Span= 0.00-48.00 hrs, dt= 0.01 hrs

Summary for Link DP-G: 51 Railroad

Inflow Area = 0.240 ac, 18.38% Impervious, Inflow Depth = 0.31" for 2-Year event
Inflow = 0.04 cfs @ 12.16 hrs, Volume= 0.006 af
Primary = 0.04 cfs @ 12.16 hrs, Volume= 0.006 af, Atten= 0%, Lag= 0.0 min

Primary outflow = Inflow, Time Span= 0.00-48.00 hrs, dt= 0.01 hrs

Summary for Link DP-H: Bourgoin Park

Inflow Area = 1.806 ac, 4.41% Impervious, Inflow Depth = 0.28" for 2-Year event
Inflow = 0.23 cfs @ 12.30 hrs, Volume= 0.042 af
Primary = 0.23 cfs @ 12.30 hrs, Volume= 0.042 af, Atten= 0%, Lag= 0.0 min

Primary outflow = Inflow, Time Span= 0.00-48.00 hrs, dt= 0.01 hrs

Summary for Link DP-I: 127 May St

Inflow Area = 0.075 ac, 0.00% Impervious, Inflow Depth = 0.09" for 2-Year event
Inflow = 0.00 cfs @ 13.78 hrs, Volume= 0.001 af
Primary = 0.00 cfs @ 13.78 hrs, Volume= 0.001 af, Atten= 0%, Lag= 0.0 min

Primary outflow = Inflow, Time Span= 0.00-48.00 hrs, dt= 0.01 hrs

Summary for Link DP-J: 167 May St

Inflow Area = 0.903 ac, 6.73% Impervious, Inflow Depth = 0.31" for 2-Year event
Inflow = 0.13 cfs @ 12.15 hrs, Volume= 0.023 af
Primary = 0.13 cfs @ 12.15 hrs, Volume= 0.023 af, Atten= 0%, Lag= 0.0 min

Primary outflow = Inflow, Time Span= 0.00-48.00 hrs, dt= 0.01 hrs

Summary for Link DP-K: RESOURCE AREA

Inflow Area = 3.563 ac, 2.36% Impervious, Inflow Depth = 0.28" for 2-Year event
Inflow = 0.45 cfs @ 12.30 hrs, Volume= 0.083 af
Primary = 0.45 cfs @ 12.30 hrs, Volume= 0.083 af, Atten= 0%, Lag= 0.0 min

Primary outflow = Inflow, Time Span= 0.00-48.00 hrs, dt= 0.01 hrs

Summary for Subcatchment EX-A1: SOUTH END

Runoff = 5.13 cfs @ 12.09 hrs, Volume= 0.368 af, Depth= 3.30"

Runoff by SCS TR-20 method, UH=SCS, Weighted-CN, Time Span= 0.00-48.00 hrs, dt= 0.01 hrs
Type III 24-hr 10-Year Rainfall=4.93"

Area (sf)	CN	Description
24,720	69	50-75% Grass cover, Fair, HSG B
25,382	98	Paved parking, HSG B
8,130	96	Gravel surface, HSG B
58,232	85	Weighted Average
32,850		56.41% Pervious Area
25,382		43.59% Impervious Area

Tc (min)	Length (feet)	Slope (ft/ft)	Velocity (ft/sec)	Capacity (cfs)	Description
6.0					**Direct Entry, Direct**

Summary for Subcatchment EX-B1: INTERSECTION

Runoff = 2.24 cfs @ 12.08 hrs, Volume= 0.182 af, Depth= 4.69"

Runoff by SCS TR-20 method, UH=SCS, Weighted-CN, Time Span= 0.00-48.00 hrs, dt= 0.01 hrs
Type III 24-hr 10-Year Rainfall=4.93"

Area (sf)	CN	Description
204	49	50-75% Grass cover, Fair, HSG A
20,018	98	Paved parking, HSG A
20,222	98	Weighted Average
204		1.01% Pervious Area
20,018		98.99% Impervious Area

Tc (min)	Length (feet)	Slope (ft/ft)	Velocity (ft/sec)	Capacity (cfs)	Description
6.0					**Direct Entry, Direct**

Summary for Subcatchment EX-B2: STA 25-->33

Runoff = 5.32 cfs @ 12.09 hrs, Volume= 0.389 af, Depth= 3.70"

Runoff by SCS TR-20 method, UH=SCS, Weighted-CN, Time Span= 0.00-48.00 hrs, dt= 0.01 hrs
Type III 24-hr 10-Year Rainfall=4.93"

Area (sf)	CN	Description
17,180	69	50-75% Grass cover, Fair, HSG B
33,434	98	Paved parking, HSG B
4,302	96	Gravel surface, HSG B
54,916	89	Weighted Average
21,482		39.12% Pervious Area
33,434		60.88% Impervious Area

Tc (min)	Length (feet)	Slope (ft/ft)	Velocity (ft/sec)	Capacity (cfs)	Description
6.0					**Direct Entry, Direct**

Summary for Subcatchment EX-C1: NE Essex

Runoff = 1.79 cfs @ 12.08 hrs, Volume= 0.146 af, Depth= 4.69"

Runoff by SCS TR-20 method, UH=SCS, Weighted-CN, Time Span= 0.00-48.00 hrs, dt= 0.01 hrs
Type III 24-hr 10-Year Rainfall=4.93"

Area (sf)	CN	Description
40	69	50-75% Grass cover, Fair, HSG B
16,171	98	Paved parking, HSG B
16,211	98	Weighted Average
40		0.25% Pervious Area
16,171		99.75% Impervious Area

Tc (min)	Length (feet)	Slope (ft/ft)	Velocity (ft/sec)	Capacity (cfs)	Description
6.0					**Direct Entry, Direct**

Summary for Subcatchment EX-D1: STA 33-->49

Runoff = 6.05 cfs @ 12.09 hrs, Volume= 0.432 af, Depth= 2.31"

Runoff by SCS TR-20 method, UH=SCS, Weighted-CN, Time Span= 0.00-48.00 hrs, dt= 0.01 hrs
Type III 24-hr 10-Year Rainfall=4.93"

Area (sf)	CN	Description
80,039	69	50-75% Grass cover, Fair, HSG B
1,757	98	Paved parking, HSG B
16,024	96	Gravel surface, HSG B
97,820	74	Weighted Average
96,063		98.20% Pervious Area
1,757		1.80% Impervious Area

Tc (min)	Length (feet)	Slope (ft/ft)	Velocity (ft/sec)	Capacity (cfs)	Description
6.0					**Direct Entry, Direct**

Summary for Subcatchment EX-E1: STA 33-->49

Runoff = 1.69 cfs @ 12.09 hrs, Volume= 0.123 af, Depth= 1.91"

Runoff by SCS TR-20 method, UH=SCS, Weighted-CN, Time Span= 0.00-48.00 hrs, dt= 0.01 hrs
Type III 24-hr 10-Year Rainfall=4.93"

Area (sf)	CN	Description
33,654	69	50-75% Grass cover, Fair, HSG B
76	98	Paved parking, HSG B
33,730	69	Weighted Average
33,654		99.77% Pervious Area
76		0.23% Impervious Area

Tc (min)	Length (feet)	Slope (ft/ft)	Velocity (ft/sec)	Capacity (cfs)	Description
6.0					**Direct Entry, Direct**

Summary for Subcatchment EX-F1: STA 49-->62

Runoff = 2.74 cfs @ 12.10 hrs, Volume= 0.222 af, Depth= 1.19"

Runoff by SCS TR-20 method, UH=SCS, Weighted-CN, Time Span= 0.00-48.00 hrs, dt= 0.01 hrs
Type III 24-hr 10-Year Rainfall=4.93"

Area (sf)	CN	Description
76,325	49	50-75% Grass cover, Fair, HSG A
7,070	98	Paved parking, HSG A
13,731	96	Gravel surface, HSG A
97,126	59	Weighted Average
90,056		92.72% Pervious Area
7,070		7.28% Impervious Area

Tc (min)	Length (feet)	Slope (ft/ft)	Velocity (ft/sec)	Capacity (cfs)	Description
6.0					**Direct Entry, Direct**

Summary for Subcatchment EX-G1: STA 57-->61

Runoff = 0.27 cfs @ 12.10 hrs, Volume= 0.023 af, Depth= 1.13"

Runoff by SCS TR-20 method, UH=SCS, Weighted-CN, Time Span= 0.00-48.00 hrs, dt= 0.01 hrs
Type III 24-hr 10-Year Rainfall=4.93"

Area (sf)	CN	Description
8,534	49	50-75% Grass cover, Fair, HSG A
1,922	98	Paved parking, HSG A
10,456	58	Weighted Average
8,534		81.62% Pervious Area
1,922		18.38% Impervious Area

Tc (min)	Length (feet)	Slope (ft/ft)	Velocity (ft/sec)	Capacity (cfs)	Description
6.0					**Direct Entry, Direct**

Summary for Subcatchment EX-H1: STA 62-->71

Runoff = 1.89 cfs @ 12.10 hrs, Volume= 0.161 af, Depth= 1.07"

Runoff by SCS TR-20 method, UH=SCS, Weighted-CN, Time Span= 0.00-48.00 hrs, dt= 0.01 hrs
Type III 24-hr 10-Year Rainfall=4.93"

Area (sf)	CN	Description
64,584	49	50-75% Grass cover, Fair, HSG A
3,471	98	Paved parking, HSG A
10,602	96	Gravel surface, HSG A
78,657	57	Weighted Average
75,186		95.59% Pervious Area
3,471		4.41% Impervious Area

Tc (min)	Length (feet)	Slope (ft/ft)	Velocity (ft/sec)	Capacity (cfs)	Description
6.0					**Direct Entry, Direct**

Summary for Subcatchment EX-I1: STA 68-->70

Runoff = 0.03 cfs @ 12.13 hrs, Volume= 0.004 af, Depth= 0.61"

Runoff by SCS TR-20 method, UH=SCS, Weighted-CN, Time Span= 0.00-48.00 hrs, dt= 0.01 hrs
Type III 24-hr 10-Year Rainfall=4.93"

Area (sf)	CN	Description
3,259	49	50-75% Grass cover, Fair, HSG A
3,259		100.00% Pervious Area

Tc (min)	Length (feet)	Slope (ft/ft)	Velocity (ft/sec)	Capacity (cfs)	Description
6.0					**Direct Entry, Direct**

Summary for Subcatchment EX-J1: STA 71-->74

Runoff = 0.77 cfs @ 12.10 hrs, Volume= 0.063 af, Depth= 1.19"

Runoff by SCS TR-20 method, UH=SCS, Weighted-CN, Time Span= 0.00-48.00 hrs, dt= 0.01 hrs
Type III 24-hr 10-Year Rainfall=4.93"

Area (sf)	CN	Description
21,462	49	50-75% Grass cover, Fair, HSG A
2,036	98	Paved parking, HSG A
3,914	96	Gravel surface, HSG A
27,412	59	Weighted Average
25,376		92.57% Pervious Area
2,036		7.43% Impervious Area

Tc (min)	Length (feet)	Slope (ft/ft)	Velocity (ft/sec)	Capacity (cfs)	Description
6.0					**Direct Entry, Direct**

Summary for Subcatchment EX-J2: STA 71-->74

Runoff = 0.24 cfs @ 12.11 hrs, Volume= 0.022 af, Depth= 0.95"

Runoff by SCS TR-20 method, UH=SCS, Weighted-CN, Time Span= 0.00-48.00 hrs, dt= 0.01 hrs
Type III 24-hr 10-Year Rainfall=4.93"

Area (sf)	CN	Description
10,314	49	50-75% Grass cover, Fair, HSG A
612	98	Paved parking, HSG A
1,004	96	Gravel surface, HSG A
11,930	55	Weighted Average
11,318		94.87% Pervious Area
612		5.13% Impervious Area

Tc (min)	Length (feet)	Slope (ft/ft)	Velocity (ft/sec)	Capacity (cfs)	Description
6.0					**Direct Entry, Direct**

Summary for Subcatchment EX-K1: NORTH END

Runoff = 3.74 cfs @ 12.10 hrs, Volume= 0.317 af, Depth= 1.07"

Runoff by SCS TR-20 method, UH=SCS, Weighted-CN, Time Span= 0.00-48.00 hrs, dt= 0.01 hrs
Type III 24-hr 10-Year Rainfall=4.93"

Area (sf)	CN	Description
129,424	49	50-75% Grass cover, Fair, HSG A
3,669	98	Paved parking, HSG A
22,129	96	Gravel surface, HSG A
155,222	57	Weighted Average
151,553		97.64% Pervious Area
3,669		2.36% Impervious Area

Tc (min)	Length (feet)	Slope (ft/ft)	Velocity (ft/sec)	Capacity (cfs)	Description
6.0					**Direct Entry, Direct**

Summary for Link DP-A: RIVER

Inflow Area = 1.337 ac, 43.59% Impervious, Inflow Depth = 3.30" for 10-Year event
Inflow = 5.13 cfs @ 12.09 hrs, Volume= 0.368 af
Primary = 5.13 cfs @ 12.09 hrs, Volume= 0.368 af, Atten= 0%, Lag= 0.0 min

Primary outflow = Inflow, Time Span= 0.00-48.00 hrs, dt= 0.01 hrs

Summary for Link DP-B: CBS

Inflow Area = 1.725 ac, 71.14% Impervious, Inflow Depth = 3.97" for 10-Year event
Inflow = 7.56 cfs @ 12.08 hrs, Volume= 0.571 af
Primary = 7.56 cfs @ 12.08 hrs, Volume= 0.571 af, Atten= 0%, Lag= 0.0 min

Primary outflow = Inflow, Time Span= 0.00-48.00 hrs, dt= 0.01 hrs

Summary for Link DP-C: NE Essex

Inflow Area = 0.372 ac, 99.75% Impervious, Inflow Depth = 4.69" for 10-Year event
Inflow = 1.79 cfs @ 12.08 hrs, Volume= 0.146 af
Primary = 1.79 cfs @ 12.08 hrs, Volume= 0.146 af, Atten= 0%, Lag= 0.0 min

Primary outflow = Inflow, Time Span= 0.00-48.00 hrs, dt= 0.01 hrs

Summary for Link DP-D: wetland

Inflow Area = 2.246 ac, 1.80% Impervious, Inflow Depth = 2.31" for 10-Year event
Inflow = 6.05 cfs @ 12.09 hrs, Volume= 0.432 af
Primary = 6.05 cfs @ 12.09 hrs, Volume= 0.432 af, Atten= 0%, Lag= 0.0 min

Primary outflow = Inflow, Time Span= 0.00-48.00 hrs, dt= 0.01 hrs

Summary for Link DP-E: wetland

Inflow Area = 0.774 ac, 0.23% Impervious, Inflow Depth = 1.91" for 10-Year event
Inflow = 1.69 cfs @ 12.09 hrs, Volume= 0.123 af
Primary = 1.69 cfs @ 12.09 hrs, Volume= 0.123 af, Atten= 0%, Lag= 0.0 min

Primary outflow = Inflow, Time Span= 0.00-48.00 hrs, dt= 0.01 hrs

Summary for Link DP-F: NE Haverhill

Inflow Area = 2.230 ac, 7.28% Impervious, Inflow Depth = 1.19" for 10-Year event
Inflow = 2.74 cfs @ 12.10 hrs, Volume= 0.222 af
Primary = 2.74 cfs @ 12.10 hrs, Volume= 0.222 af, Atten= 0%, Lag= 0.0 min

Primary outflow = Inflow, Time Span= 0.00-48.00 hrs, dt= 0.01 hrs

Summary for Link DP-G: 51 Railroad

Inflow Area = 0.240 ac, 18.38% Impervious, Inflow Depth = 1.13" for 10-Year event
Inflow = 0.27 cfs @ 12.10 hrs, Volume= 0.023 af
Primary = 0.27 cfs @ 12.10 hrs, Volume= 0.023 af, Atten= 0%, Lag= 0.0 min

Primary outflow = Inflow, Time Span= 0.00-48.00 hrs, dt= 0.01 hrs

Summary for Link DP-H: Bourgoin Park

Inflow Area = 1.806 ac, 4.41% Impervious, Inflow Depth = 1.07" for 10-Year event
Inflow = 1.89 cfs @ 12.10 hrs, Volume= 0.161 af
Primary = 1.89 cfs @ 12.10 hrs, Volume= 0.161 af, Atten= 0%, Lag= 0.0 min

Primary outflow = Inflow, Time Span= 0.00-48.00 hrs, dt= 0.01 hrs

Summary for Link DP-I: 127 May St

Inflow Area = 0.075 ac, 0.00% Impervious, Inflow Depth = 0.61" for 10-Year event
Inflow = 0.03 cfs @ 12.13 hrs, Volume= 0.004 af
Primary = 0.03 cfs @ 12.13 hrs, Volume= 0.004 af, Atten= 0%, Lag= 0.0 min

Primary outflow = Inflow, Time Span= 0.00-48.00 hrs, dt= 0.01 hrs

Summary for Link DP-J: 167 May St

Inflow Area = 0.903 ac, 6.73% Impervious, Inflow Depth = 1.12" for 10-Year event
Inflow = 1.01 cfs @ 12.10 hrs, Volume= 0.084 af
Primary = 1.01 cfs @ 12.10 hrs, Volume= 0.084 af, Atten= 0%, Lag= 0.0 min

Primary outflow = Inflow, Time Span= 0.00-48.00 hrs, dt= 0.01 hrs

Summary for Link DP-K: RESOURCE AREA

Inflow Area = 3.563 ac, 2.36% Impervious, Inflow Depth = 1.07" for 10-Year event
Inflow = 3.74 cfs @ 12.10 hrs, Volume= 0.317 af
Primary = 3.74 cfs @ 12.10 hrs, Volume= 0.317 af, Atten= 0%, Lag= 0.0 min

Primary outflow = Inflow, Time Span= 0.00-48.00 hrs, dt= 0.01 hrs

Summary for Subcatchment EX-A1: SOUTH END

Runoff = 6.71 cfs @ 12.09 hrs, Volume= 0.487 af, Depth= 4.37"

Runoff by SCS TR-20 method, UH=SCS, Weighted-CN, Time Span= 0.00-48.00 hrs, dt= 0.01 hrs
Type III 24-hr 25-Year Rainfall=6.07"

Area (sf)	CN	Description
24,720	69	50-75% Grass cover, Fair, HSG B
25,382	98	Paved parking, HSG B
8,130	96	Gravel surface, HSG B
58,232	85	Weighted Average
32,850		56.41% Pervious Area
25,382		43.59% Impervious Area

Tc (min)	Length (feet)	Slope (ft/ft)	Velocity (ft/sec)	Capacity (cfs)	Description
6.0					**Direct Entry, Direct**

Summary for Subcatchment EX-B1: INTERSECTION

Runoff = 2.76 cfs @ 12.08 hrs, Volume= 0.226 af, Depth= 5.83"

Runoff by SCS TR-20 method, UH=SCS, Weighted-CN, Time Span= 0.00-48.00 hrs, dt= 0.01 hrs
Type III 24-hr 25-Year Rainfall=6.07"

Area (sf)	CN	Description
204	49	50-75% Grass cover, Fair, HSG A
20,018	98	Paved parking, HSG A
20,222	98	Weighted Average
204		1.01% Pervious Area
20,018		98.99% Impervious Area

Tc (min)	Length (feet)	Slope (ft/ft)	Velocity (ft/sec)	Capacity (cfs)	Description
6.0					**Direct Entry, Direct**

Summary for Subcatchment EX-B2: STA 25-->33

Runoff = 6.81 cfs @ 12.08 hrs, Volume= 0.505 af, Depth= 4.80"

Runoff by SCS TR-20 method, UH=SCS, Weighted-CN, Time Span= 0.00-48.00 hrs, dt= 0.01 hrs
Type III 24-hr 25-Year Rainfall=6.07"

Area (sf)	CN	Description
17,180	69	50-75% Grass cover, Fair, HSG B
33,434	98	Paved parking, HSG B
4,302	96	Gravel surface, HSG B
54,916	89	Weighted Average
21,482		39.12% Pervious Area
33,434		60.88% Impervious Area

Tc (min)	Length (feet)	Slope (ft/ft)	Velocity (ft/sec)	Capacity (cfs)	Description
6.0					**Direct Entry, Direct**

Summary for Subcatchment EX-C1: NE Essex

Runoff = 2.21 cfs @ 12.08 hrs, Volume= 0.181 af, Depth= 5.83"

Runoff by SCS TR-20 method, UH=SCS, Weighted-CN, Time Span= 0.00-48.00 hrs, dt= 0.01 hrs
Type III 24-hr 25-Year Rainfall=6.07"

Area (sf)	CN	Description
40	69	50-75% Grass cover, Fair, HSG B
16,171	98	Paved parking, HSG B
16,211	98	Weighted Average
40		0.25% Pervious Area
16,171		99.75% Impervious Area

Tc (min)	Length (feet)	Slope (ft/ft)	Velocity (ft/sec)	Capacity (cfs)	Description
6.0					**Direct Entry, Direct**

Summary for Subcatchment EX-D1: STA 33-->49

Runoff = 8.54 cfs @ 12.09 hrs, Volume= 0.607 af, Depth= 3.24"

Runoff by SCS TR-20 method, UH=SCS, Weighted-CN, Time Span= 0.00-48.00 hrs, dt= 0.01 hrs
Type III 24-hr 25-Year Rainfall=6.07"

Area (sf)	CN	Description
80,039	69	50-75% Grass cover, Fair, HSG B
1,757	98	Paved parking, HSG B
16,024	96	Gravel surface, HSG B
97,820	74	Weighted Average
96,063		98.20% Pervious Area
1,757		1.80% Impervious Area

Tc (min)	Length (feet)	Slope (ft/ft)	Velocity (ft/sec)	Capacity (cfs)	Description
6.0					**Direct Entry, Direct**

Summary for Subcatchment EX-E1: STA 33-->49

Runoff = 2.50 cfs @ 12.09 hrs, Volume= 0.179 af, Depth= 2.77"

Runoff by SCS TR-20 method, UH=SCS, Weighted-CN, Time Span= 0.00-48.00 hrs, dt= 0.01 hrs
Type III 24-hr 25-Year Rainfall=6.07"

Area (sf)	CN	Description
33,654	69	50-75% Grass cover, Fair, HSG B
76	98	Paved parking, HSG B
33,730	69	Weighted Average
33,654		99.77% Pervious Area
76		0.23% Impervious Area

Tc (min)	Length (feet)	Slope (ft/ft)	Velocity (ft/sec)	Capacity (cfs)	Description
6.0					**Direct Entry, Direct**

Summary for Subcatchment EX-F1: STA 49-->62

Runoff = 4.62 cfs @ 12.10 hrs, Volume= 0.350 af, Depth= 1.88"

Runoff by SCS TR-20 method, UH=SCS, Weighted-CN, Time Span= 0.00-48.00 hrs, dt= 0.01 hrs
Type III 24-hr 25-Year Rainfall=6.07"

Area (sf)	CN	Description
76,325	49	50-75% Grass cover, Fair, HSG A
7,070	98	Paved parking, HSG A
13,731	96	Gravel surface, HSG A
97,126	59	Weighted Average
90,056		92.72% Pervious Area
7,070		7.28% Impervious Area

Tc (min)	Length (feet)	Slope (ft/ft)	Velocity (ft/sec)	Capacity (cfs)	Description
6.0					**Direct Entry, Direct**

Summary for Subcatchment EX-G1: STA 57-->61

Runoff = 0.47 cfs @ 12.10 hrs, Volume= 0.036 af, Depth= 1.80"

Runoff by SCS TR-20 method, UH=SCS, Weighted-CN, Time Span= 0.00-48.00 hrs, dt= 0.01 hrs
Type III 24-hr 25-Year Rainfall=6.07"

Area (sf)	CN	Description
8,534	49	50-75% Grass cover, Fair, HSG A
1,922	98	Paved parking, HSG A
10,456	58	Weighted Average
8,534		81.62% Pervious Area
1,922		18.38% Impervious Area

Tc (min)	Length (feet)	Slope (ft/ft)	Velocity (ft/sec)	Capacity (cfs)	Description
6.0					**Direct Entry, Direct**

Summary for Subcatchment EX-H1: STA 62-->71

Runoff = 3.34 cfs @ 12.10 hrs, Volume= 0.259 af, Depth= 1.72"

Runoff by SCS TR-20 method, UH=SCS, Weighted-CN, Time Span= 0.00-48.00 hrs, dt= 0.01 hrs
Type III 24-hr 25-Year Rainfall=6.07"

Area (sf)	CN	Description
64,584	49	50-75% Grass cover, Fair, HSG A
3,471	98	Paved parking, HSG A
10,602	96	Gravel surface, HSG A
78,657	57	Weighted Average
75,186		95.59% Pervious Area
3,471		4.41% Impervious Area

Tc (min)	Length (feet)	Slope (ft/ft)	Velocity (ft/sec)	Capacity (cfs)	Description
6.0					**Direct Entry, Direct**

Summary for Subcatchment EX-I1: STA 68-->70

Runoff = 0.07 cfs @ 12.11 hrs, Volume= 0.007 af, Depth= 1.10"

Runoff by SCS TR-20 method, UH=SCS, Weighted-CN, Time Span= 0.00-48.00 hrs, dt= 0.01 hrs
Type III 24-hr 25-Year Rainfall=6.07"

Area (sf)	CN	Description
3,259	49	50-75% Grass cover, Fair, HSG A
3,259		100.00% Pervious Area

Tc (min)	Length (feet)	Slope (ft/ft)	Velocity (ft/sec)	Capacity (cfs)	Description
6.0					**Direct Entry, Direct**

Summary for Subcatchment EX-J1: STA 71-->74

Runoff = 1.30 cfs @ 12.10 hrs, Volume= 0.099 af, Depth= 1.88"

Runoff by SCS TR-20 method, UH=SCS, Weighted-CN, Time Span= 0.00-48.00 hrs, dt= 0.01 hrs
Type III 24-hr 25-Year Rainfall=6.07"

Area (sf)	CN	Description
21,462	49	50-75% Grass cover, Fair, HSG A
2,036	98	Paved parking, HSG A
3,914	96	Gravel surface, HSG A
27,412	59	Weighted Average
25,376		92.57% Pervious Area
2,036		7.43% Impervious Area

Tc (min)	Length (feet)	Slope (ft/ft)	Velocity (ft/sec)	Capacity (cfs)	Description
6.0					**Direct Entry, Direct**

Summary for Subcatchment EX-J2: STA 71-->74

Runoff = 0.45 cfs @ 12.10 hrs, Volume= 0.036 af, Depth= 1.56"

Runoff by SCS TR-20 method, UH=SCS, Weighted-CN, Time Span= 0.00-48.00 hrs, dt= 0.01 hrs
Type III 24-hr 25-Year Rainfall=6.07"

Area (sf)	CN	Description
10,314	49	50-75% Grass cover, Fair, HSG A
612	98	Paved parking, HSG A
1,004	96	Gravel surface, HSG A
11,930	55	Weighted Average
11,318		94.87% Pervious Area
612		5.13% Impervious Area

Tc (min)	Length (feet)	Slope (ft/ft)	Velocity (ft/sec)	Capacity (cfs)	Description
6.0					**Direct Entry, Direct**

Summary for Subcatchment EX-K1: NORTH END

Runoff = 6.59 cfs @ 12.10 hrs, Volume= 0.510 af, Depth= 1.72"

Runoff by SCS TR-20 method, UH=SCS, Weighted-CN, Time Span= 0.00-48.00 hrs, dt= 0.01 hrs
Type III 24-hr 25-Year Rainfall=6.07"

Area (sf)	CN	Description
129,424	49	50-75% Grass cover, Fair, HSG A
3,669	98	Paved parking, HSG A
22,129	96	Gravel surface, HSG A
155,222	57	Weighted Average
151,553		97.64% Pervious Area
3,669		2.36% Impervious Area

Tc (min)	Length (feet)	Slope (ft/ft)	Velocity (ft/sec)	Capacity (cfs)	Description
6.0					**Direct Entry, Direct**

Summary for Link DP-A: RIVER

Inflow Area = 1.337 ac, 43.59% Impervious, Inflow Depth = 4.37" for 25-Year event
Inflow = 6.71 cfs @ 12.09 hrs, Volume= 0.487 af
Primary = 6.71 cfs @ 12.09 hrs, Volume= 0.487 af, Atten= 0%, Lag= 0.0 min

Primary outflow = Inflow, Time Span= 0.00-48.00 hrs, dt= 0.01 hrs

Summary for Link DP-B: CBS

Inflow Area = 1.725 ac, 71.14% Impervious, Inflow Depth = 5.08" for 25-Year event
Inflow = 9.57 cfs @ 12.08 hrs, Volume= 0.730 af
Primary = 9.57 cfs @ 12.08 hrs, Volume= 0.730 af, Atten= 0%, Lag= 0.0 min

Primary outflow = Inflow, Time Span= 0.00-48.00 hrs, dt= 0.01 hrs

Summary for Link DP-C: NE Essex

Inflow Area = 0.372 ac, 99.75% Impervious, Inflow Depth = 5.83" for 25-Year event
Inflow = 2.21 cfs @ 12.08 hrs, Volume= 0.181 af
Primary = 2.21 cfs @ 12.08 hrs, Volume= 0.181 af, Atten= 0%, Lag= 0.0 min

Primary outflow = Inflow, Time Span= 0.00-48.00 hrs, dt= 0.01 hrs

Summary for Link DP-D: wetland

Inflow Area = 2.246 ac, 1.80% Impervious, Inflow Depth = 3.24" for 25-Year event
Inflow = 8.54 cfs @ 12.09 hrs, Volume= 0.607 af
Primary = 8.54 cfs @ 12.09 hrs, Volume= 0.607 af, Atten= 0%, Lag= 0.0 min

Primary outflow = Inflow, Time Span= 0.00-48.00 hrs, dt= 0.01 hrs

Summary for Link DP-E: wetland

Inflow Area = 0.774 ac, 0.23% Impervious, Inflow Depth = 2.77" for 25-Year event
Inflow = 2.50 cfs @ 12.09 hrs, Volume= 0.179 af
Primary = 2.50 cfs @ 12.09 hrs, Volume= 0.179 af, Atten= 0%, Lag= 0.0 min

Primary outflow = Inflow, Time Span= 0.00-48.00 hrs, dt= 0.01 hrs

Summary for Link DP-F: NE Haverhill

Inflow Area = 2.230 ac, 7.28% Impervious, Inflow Depth = 1.88" for 25-Year event
Inflow = 4.62 cfs @ 12.10 hrs, Volume= 0.350 af
Primary = 4.62 cfs @ 12.10 hrs, Volume= 0.350 af, Atten= 0%, Lag= 0.0 min

Primary outflow = Inflow, Time Span= 0.00-48.00 hrs, dt= 0.01 hrs

Summary for Link DP-G: 51 Railroad

Inflow Area = 0.240 ac, 18.38% Impervious, Inflow Depth = 1.80" for 25-Year event
Inflow = 0.47 cfs @ 12.10 hrs, Volume= 0.036 af
Primary = 0.47 cfs @ 12.10 hrs, Volume= 0.036 af, Atten= 0%, Lag= 0.0 min

Primary outflow = Inflow, Time Span= 0.00-48.00 hrs, dt= 0.01 hrs

Summary for Link DP-H: Bourgoin Park

Inflow Area = 1.806 ac, 4.41% Impervious, Inflow Depth = 1.72" for 25-Year event
Inflow = 3.34 cfs @ 12.10 hrs, Volume= 0.259 af
Primary = 3.34 cfs @ 12.10 hrs, Volume= 0.259 af, Atten= 0%, Lag= 0.0 min

Primary outflow = Inflow, Time Span= 0.00-48.00 hrs, dt= 0.01 hrs

Summary for Link DP-I: 127 May St

Inflow Area = 0.075 ac, 0.00% Impervious, Inflow Depth = 1.10" for 25-Year event
Inflow = 0.07 cfs @ 12.11 hrs, Volume= 0.007 af
Primary = 0.07 cfs @ 12.11 hrs, Volume= 0.007 af, Atten= 0%, Lag= 0.0 min

Primary outflow = Inflow, Time Span= 0.00-48.00 hrs, dt= 0.01 hrs

Summary for Link DP-J: 167 May St

Inflow Area = 0.903 ac, 6.73% Impervious, Inflow Depth = 1.78" for 25-Year event
Inflow = 1.75 cfs @ 12.10 hrs, Volume= 0.134 af
Primary = 1.75 cfs @ 12.10 hrs, Volume= 0.134 af, Atten= 0%, Lag= 0.0 min

Primary outflow = Inflow, Time Span= 0.00-48.00 hrs, dt= 0.01 hrs

Summary for Link DP-K: RESOURCE AREA

Inflow Area = 3.563 ac, 2.36% Impervious, Inflow Depth = 1.72" for 25-Year event
Inflow = 6.59 cfs @ 12.10 hrs, Volume= 0.510 af
Primary = 6.59 cfs @ 12.10 hrs, Volume= 0.510 af, Atten= 0%, Lag= 0.0 min

Primary outflow = Inflow, Time Span= 0.00-48.00 hrs, dt= 0.01 hrs

Summary for Subcatchment EX-A1: SOUTH END

Runoff = 9.14 cfs @ 12.09 hrs, Volume= 0.673 af, Depth= 6.04"

Runoff by SCS TR-20 method, UH=SCS, Weighted-CN, Time Span= 0.00-48.00 hrs, dt= 0.01 hrs
Type III 24-hr 100-Year Rainfall=7.82"

Area (sf)	CN	Description
24,720	69	50-75% Grass cover, Fair, HSG B
25,382	98	Paved parking, HSG B
8,130	96	Gravel surface, HSG B
58,232	85	Weighted Average
32,850		56.41% Pervious Area
25,382		43.59% Impervious Area

Tc (min)	Length (feet)	Slope (ft/ft)	Velocity (ft/sec)	Capacity (cfs)	Description
6.0					**Direct Entry, Direct**

Summary for Subcatchment EX-B1: INTERSECTION

Runoff = 3.56 cfs @ 12.08 hrs, Volume= 0.293 af, Depth= 7.58"

Runoff by SCS TR-20 method, UH=SCS, Weighted-CN, Time Span= 0.00-48.00 hrs, dt= 0.01 hrs
Type III 24-hr 100-Year Rainfall=7.82"

Area (sf)	CN	Description
204	49	50-75% Grass cover, Fair, HSG A
20,018	98	Paved parking, HSG A
20,222	98	Weighted Average
204		1.01% Pervious Area
20,018		98.99% Impervious Area

Tc (min)	Length (feet)	Slope (ft/ft)	Velocity (ft/sec)	Capacity (cfs)	Description
6.0					**Direct Entry, Direct**

Summary for Subcatchment EX-B2: STA 25-->33

Runoff = 9.07 cfs @ 12.08 hrs, Volume= 0.684 af, Depth= 6.51"

Runoff by SCS TR-20 method, UH=SCS, Weighted-CN, Time Span= 0.00-48.00 hrs, dt= 0.01 hrs
Type III 24-hr 100-Year Rainfall=7.82"

Area (sf)	CN	Description
17,180	69	50-75% Grass cover, Fair, HSG B
33,434	98	Paved parking, HSG B
4,302	96	Gravel surface, HSG B
54,916	89	Weighted Average
21,482		39.12% Pervious Area
33,434		60.88% Impervious Area

Tc (min)	Length (feet)	Slope (ft/ft)	Velocity (ft/sec)	Capacity (cfs)	Description
6.0					**Direct Entry, Direct**

Summary for Subcatchment EX-C1: NE Essex

Runoff = 2.86 cfs @ 12.08 hrs, Volume= 0.235 af, Depth= 7.58"

Runoff by SCS TR-20 method, UH=SCS, Weighted-CN, Time Span= 0.00-48.00 hrs, dt= 0.01 hrs
Type III 24-hr 100-Year Rainfall=7.82"

Area (sf)	CN	Description
40	69	50-75% Grass cover, Fair, HSG B
16,171	98	Paved parking, HSG B
16,211	98	Weighted Average
40		0.25% Pervious Area
16,171		99.75% Impervious Area

Tc (min)	Length (feet)	Slope (ft/ft)	Velocity (ft/sec)	Capacity (cfs)	Description
6.0					**Direct Entry, Direct**

Summary for Subcatchment EX-D1: STA 33-->49

Runoff = 12.52 cfs @ 12.09 hrs, Volume= 0.892 af, Depth= 4.77"

Runoff by SCS TR-20 method, UH=SCS, Weighted-CN, Time Span= 0.00-48.00 hrs, dt= 0.01 hrs
Type III 24-hr 100-Year Rainfall=7.82"

Area (sf)	CN	Description
80,039	69	50-75% Grass cover, Fair, HSG B
1,757	98	Paved parking, HSG B
16,024	96	Gravel surface, HSG B
97,820	74	Weighted Average
96,063		98.20% Pervious Area
1,757		1.80% Impervious Area

Tc (min)	Length (feet)	Slope (ft/ft)	Velocity (ft/sec)	Capacity (cfs)	Description
6.0					**Direct Entry, Direct**

Summary for Subcatchment EX-E1: STA 33-->49

Runoff = 3.81 cfs @ 12.09 hrs, Volume= 0.271 af, Depth= 4.20"

Runoff by SCS TR-20 method, UH=SCS, Weighted-CN, Time Span= 0.00-48.00 hrs, dt= 0.01 hrs
Type III 24-hr 100-Year Rainfall=7.82"

Area (sf)	CN	Description
33,654	69	50-75% Grass cover, Fair, HSG B
76	98	Paved parking, HSG B
33,730	69	Weighted Average
33,654		99.77% Pervious Area
76		0.23% Impervious Area

Tc (min)	Length (feet)	Slope (ft/ft)	Velocity (ft/sec)	Capacity (cfs)	Description
6.0					**Direct Entry, Direct**

Summary for Subcatchment EX-F1: STA 49-->62

Runoff = 7.91 cfs @ 12.09 hrs, Volume= 0.574 af, Depth= 3.09"

Runoff by SCS TR-20 method, UH=SCS, Weighted-CN, Time Span= 0.00-48.00 hrs, dt= 0.01 hrs
Type III 24-hr 100-Year Rainfall=7.82"

Area (sf)	CN	Description
76,325	49	50-75% Grass cover, Fair, HSG A
7,070	98	Paved parking, HSG A
13,731	96	Gravel surface, HSG A
97,126	59	Weighted Average
90,056		92.72% Pervious Area
7,070		7.28% Impervious Area

Tc (min)	Length (feet)	Slope (ft/ft)	Velocity (ft/sec)	Capacity (cfs)	Description
6.0					**Direct Entry, Direct**

Summary for Subcatchment EX-G1: STA 57-->61

Runoff = 0.82 cfs @ 12.09 hrs, Volume= 0.060 af, Depth= 2.98"

Runoff by SCS TR-20 method, UH=SCS, Weighted-CN, Time Span= 0.00-48.00 hrs, dt= 0.01 hrs
Type III 24-hr 100-Year Rainfall=7.82"

Area (sf)	CN	Description
8,534	49	50-75% Grass cover, Fair, HSG A
1,922	98	Paved parking, HSG A
10,456	58	Weighted Average
8,534		81.62% Pervious Area
1,922		18.38% Impervious Area

Tc (min)	Length (feet)	Slope (ft/ft)	Velocity (ft/sec)	Capacity (cfs)	Description
6.0					**Direct Entry, Direct**

Summary for Subcatchment EX-H1: STA 62-->71

Runoff = 5.90 cfs @ 12.09 hrs, Volume= 0.433 af, Depth= 2.87"

Runoff by SCS TR-20 method, UH=SCS, Weighted-CN, Time Span= 0.00-48.00 hrs, dt= 0.01 hrs
Type III 24-hr 100-Year Rainfall=7.82"

Area (sf)	CN	Description
64,584	49	50-75% Grass cover, Fair, HSG A
3,471	98	Paved parking, HSG A
10,602	96	Gravel surface, HSG A
78,657	57	Weighted Average
75,186		95.59% Pervious Area
3,471		4.41% Impervious Area

Tc (min)	Length (feet)	Slope (ft/ft)	Velocity (ft/sec)	Capacity (cfs)	Description
6.0					**Direct Entry, Direct**

Summary for Subcatchment EX-I1: STA 68-->70

Runoff = 0.16 cfs @ 12.10 hrs, Volume= 0.013 af, Depth= 2.04"

Runoff by SCS TR-20 method, UH=SCS, Weighted-CN, Time Span= 0.00-48.00 hrs, dt= 0.01 hrs
Type III 24-hr 100-Year Rainfall=7.82"

Area (sf)	CN	Description
3,259	49	50-75% Grass cover, Fair, HSG A
3,259		100.00% Pervious Area

Tc (min)	Length (feet)	Slope (ft/ft)	Velocity (ft/sec)	Capacity (cfs)	Description
6.0					**Direct Entry, Direct**

Summary for Subcatchment EX-J1: STA 71-->74

Runoff = 2.23 cfs @ 12.09 hrs, Volume= 0.162 af, Depth= 3.09"

Runoff by SCS TR-20 method, UH=SCS, Weighted-CN, Time Span= 0.00-48.00 hrs, dt= 0.01 hrs
Type III 24-hr 100-Year Rainfall=7.82"

Area (sf)	CN	Description
21,462	49	50-75% Grass cover, Fair, HSG A
2,036	98	Paved parking, HSG A
3,914	96	Gravel surface, HSG A
27,412	59	Weighted Average
25,376		92.57% Pervious Area
2,036		7.43% Impervious Area

Tc (min)	Length (feet)	Slope (ft/ft)	Velocity (ft/sec)	Capacity (cfs)	Description
6.0					**Direct Entry, Direct**

Summary for Subcatchment EX-J2: STA 71-->74

Runoff = 0.82 cfs @ 12.09 hrs, Volume= 0.061 af, Depth= 2.66"

Runoff by SCS TR-20 method, UH=SCS, Weighted-CN, Time Span= 0.00-48.00 hrs, dt= 0.01 hrs
Type III 24-hr 100-Year Rainfall=7.82"

Area (sf)	CN	Description
10,314	49	50-75% Grass cover, Fair, HSG A
612	98	Paved parking, HSG A
1,004	96	Gravel surface, HSG A
11,930	55	Weighted Average
11,318		94.87% Pervious Area
612		5.13% Impervious Area

Tc (min)	Length (feet)	Slope (ft/ft)	Velocity (ft/sec)	Capacity (cfs)	Description
6.0					**Direct Entry, Direct**

Summary for Subcatchment EX-K1: NORTH END

Runoff = 11.64 cfs @ 12.09 hrs, Volume= 0.854 af, Depth= 2.87"

Runoff by SCS TR-20 method, UH=SCS, Weighted-CN, Time Span= 0.00-48.00 hrs, dt= 0.01 hrs
Type III 24-hr 100-Year Rainfall=7.82"

Area (sf)	CN	Description
129,424	49	50-75% Grass cover, Fair, HSG A
3,669	98	Paved parking, HSG A
22,129	96	Gravel surface, HSG A
155,222	57	Weighted Average
151,553		97.64% Pervious Area
3,669		2.36% Impervious Area

Tc (min)	Length (feet)	Slope (ft/ft)	Velocity (ft/sec)	Capacity (cfs)	Description
6.0					**Direct Entry, Direct**

Summary for Link DP-A: RIVER

Inflow Area = 1.337 ac, 43.59% Impervious, Inflow Depth = 6.04" for 100-Year event
Inflow = 9.14 cfs @ 12.09 hrs, Volume= 0.673 af
Primary = 9.14 cfs @ 12.09 hrs, Volume= 0.673 af, Atten= 0%, Lag= 0.0 min

Primary outflow = Inflow, Time Span= 0.00-48.00 hrs, dt= 0.01 hrs

Summary for Link DP-B: CBS

Inflow Area = 1.725 ac, 71.14% Impervious, Inflow Depth = 6.80" for 100-Year event
Inflow = 12.64 cfs @ 12.08 hrs, Volume= 0.977 af
Primary = 12.64 cfs @ 12.08 hrs, Volume= 0.977 af, Atten= 0%, Lag= 0.0 min

Primary outflow = Inflow, Time Span= 0.00-48.00 hrs, dt= 0.01 hrs

Summary for Link DP-C: NE Essex

Inflow Area = 0.372 ac, 99.75% Impervious, Inflow Depth = 7.58" for 100-Year event
Inflow = 2.86 cfs @ 12.08 hrs, Volume= 0.235 af
Primary = 2.86 cfs @ 12.08 hrs, Volume= 0.235 af, Atten= 0%, Lag= 0.0 min

Primary outflow = Inflow, Time Span= 0.00-48.00 hrs, dt= 0.01 hrs

Summary for Link DP-D: wetland

Inflow Area = 2.246 ac, 1.80% Impervious, Inflow Depth = 4.77" for 100-Year event
Inflow = 12.52 cfs @ 12.09 hrs, Volume= 0.892 af
Primary = 12.52 cfs @ 12.09 hrs, Volume= 0.892 af, Atten= 0%, Lag= 0.0 min

Primary outflow = Inflow, Time Span= 0.00-48.00 hrs, dt= 0.01 hrs

Summary for Link DP-E: wetland

Inflow Area = 0.774 ac, 0.23% Impervious, Inflow Depth = 4.20" for 100-Year event
Inflow = 3.81 cfs @ 12.09 hrs, Volume= 0.271 af
Primary = 3.81 cfs @ 12.09 hrs, Volume= 0.271 af, Atten= 0%, Lag= 0.0 min

Primary outflow = Inflow, Time Span= 0.00-48.00 hrs, dt= 0.01 hrs

Summary for Link DP-F: NE Haverhill

Inflow Area = 2.230 ac, 7.28% Impervious, Inflow Depth = 3.09" for 100-Year event
Inflow = 7.91 cfs @ 12.09 hrs, Volume= 0.574 af
Primary = 7.91 cfs @ 12.09 hrs, Volume= 0.574 af, Atten= 0%, Lag= 0.0 min

Primary outflow = Inflow, Time Span= 0.00-48.00 hrs, dt= 0.01 hrs

Summary for Link DP-G: 51 Railroad

Inflow Area = 0.240 ac, 18.38% Impervious, Inflow Depth = 2.98" for 100-Year event
Inflow = 0.82 cfs @ 12.09 hrs, Volume= 0.060 af
Primary = 0.82 cfs @ 12.09 hrs, Volume= 0.060 af, Atten= 0%, Lag= 0.0 min

Primary outflow = Inflow, Time Span= 0.00-48.00 hrs, dt= 0.01 hrs

Summary for Link DP-H: Bourgoin Park

Inflow Area = 1.806 ac, 4.41% Impervious, Inflow Depth = 2.87" for 100-Year event
Inflow = 5.90 cfs @ 12.09 hrs, Volume= 0.433 af
Primary = 5.90 cfs @ 12.09 hrs, Volume= 0.433 af, Atten= 0%, Lag= 0.0 min

Primary outflow = Inflow, Time Span= 0.00-48.00 hrs, dt= 0.01 hrs

Summary for Link DP-I: 127 May St

Inflow Area = 0.075 ac, 0.00% Impervious, Inflow Depth = 2.04" for 100-Year event
Inflow = 0.16 cfs @ 12.10 hrs, Volume= 0.013 af
Primary = 0.16 cfs @ 12.10 hrs, Volume= 0.013 af, Atten= 0%, Lag= 0.0 min

Primary outflow = Inflow, Time Span= 0.00-48.00 hrs, dt= 0.01 hrs

Summary for Link DP-J: 167 May St

Inflow Area = 0.903 ac, 6.73% Impervious, Inflow Depth = 2.96" for 100-Year event
Inflow = 3.05 cfs @ 12.09 hrs, Volume= 0.223 af
Primary = 3.05 cfs @ 12.09 hrs, Volume= 0.223 af, Atten= 0%, Lag= 0.0 min

Primary outflow = Inflow, Time Span= 0.00-48.00 hrs, dt= 0.01 hrs

Summary for Link DP-K: RESOURCE AREA

Inflow Area = 3.563 ac, 2.36% Impervious, Inflow Depth = 2.87" for 100-Year event
Inflow = 11.64 cfs @ 12.09 hrs, Volume= 0.854 af
Primary = 11.64 cfs @ 12.09 hrs, Volume= 0.854 af, Atten= 0%, Lag= 0.0 min

Primary outflow = Inflow, Time Span= 0.00-48.00 hrs, dt= 0.01 hrs

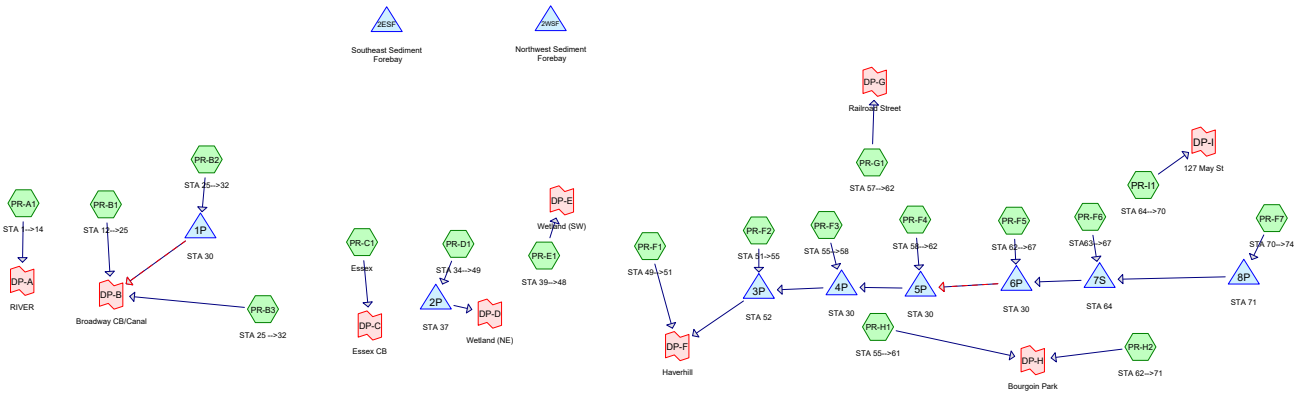

Subcat Reach Pond Link

Routing Diagram for T0694_Post-Drainage_basin areas
Prepared by IO, Printed 10/18/2022
HydroCAD® 10.00-26 s/n 02793 © 2020 HydroCAD Software Solutions LLC

T0694_Post-Drainage_basin areas
Prepared by IO
Printed 10/18/2022
HydroCAD® 10.00-26 s/n 02793 © 2020 HydroCAD Software Solutions LLC

Area Listing (all nodes)

Area (acres)	CN	Description (subcatchment-numbers)
3.192	49	50-75% Grass cover, Fair, HSG A (PR-B1, PR-F1, PR-F2, PR-F3, PR-F4, PR-F5, PR-F6, PR-F7, PR-G1, PR-H1, PR-H2, PR-I1)
3.714	69	50-75% Grass cover, Fair, HSG B (PR-A1, PR-B2, PR-B3, PR-C1, PR-D1, PR-E1)
0.041	96	Gravel surface, HSG A (PR-H1)
0.114	96	Gravel surface, HSG B (PR-D1)
1.687	98	Paved parking, HSG A (PR-B1, PR-F1, PR-F2, PR-F3, PR-F4, PR-F5, PR-F6, PR-F7, PR-H2, PR-I1)
2.141	98	Paved parking, HSG B (PR-A1, PR-B2, PR-B3, PR-C1, PR-D1, PR-E1)
10.890	**74**	**TOTAL AREA**

Summary for Subcatchment PR-A1: STA 1-->14

Runoff = 2.71 cfs @ 12.09 hrs, Volume= 0.192 af, Depth= 1.76"

Runoff by SCS TR-20 method, UH=SCS, Weighted-CN, Time Span= 0.00-48.00 hrs, dt= 0.01 hrs
Type III 24-hr 2-Year Rainfall=3.11"

Area (sf)	CN	Description
24,468	69	50-75% Grass cover, Fair, HSG B
32,708	98	Paved parking, HSG B
57,176	86	Weighted Average
24,468		42.79% Pervious Area
32,708		57.21% Impervious Area

Tc (min)	Length (feet)	Slope (ft/ft)	Velocity (ft/sec)	Capacity (cfs)	Description
6.0					**Direct Entry, Direct**

Summary for Subcatchment PR-B1: STA 12-->25

Runoff = 1.47 cfs @ 12.08 hrs, Volume= 0.117 af, Depth= 2.88"

Runoff by SCS TR-20 method, UH=SCS, Weighted-CN, Time Span= 0.00-48.00 hrs, dt= 0.01 hrs
Type III 24-hr 2-Year Rainfall=3.11"

Area (sf)	CN	Description
204	49	50-75% Grass cover, Fair, HSG A
21,088	98	Paved parking, HSG A
21,292	98	Weighted Average
204		0.96% Pervious Area
21,088		99.04% Impervious Area

Tc (min)	Length (feet)	Slope (ft/ft)	Velocity (ft/sec)	Capacity (cfs)	Description
6.0					**Direct Entry, Direct**

Summary for Subcatchment PR-B2: STA 25-->32

Runoff = 0.94 cfs @ 12.09 hrs, Volume= 0.067 af, Depth= 1.40"

Runoff by SCS TR-20 method, UH=SCS, Weighted-CN, Time Span= 0.00-48.00 hrs, dt= 0.01 hrs
Type III 24-hr 2-Year Rainfall=3.11"

Area (sf)	CN	Description
14,824	69	50-75% Grass cover, Fair, HSG B
10,366	98	Paved parking, HSG B
25,190	81	Weighted Average
14,824		58.85% Pervious Area
10,366		41.15% Impervious Area

Tc (min)	Length (feet)	Slope (ft/ft)	Velocity (ft/sec)	Capacity (cfs)	Description
6.0					**Direct Entry, Direct**

Summary for Subcatchment PR-B3: STA 25 -->32

Runoff = 0.99 cfs @ 12.09 hrs, Volume= 0.072 af, Depth= 1.27"

Runoff by SCS TR-20 method, UH=SCS, Weighted-CN, Time Span= 0.00-48.00 hrs, dt= 0.01 hrs
Type III 24-hr 2-Year Rainfall=3.11"

Area (sf)	CN	Description
19,443	69	50-75% Grass cover, Fair, HSG B
10,082	98	Paved parking, HSG B
29,525	79	Weighted Average
19,443		65.85% Pervious Area
10,082		34.15% Impervious Area

Tc (min)	Length (feet)	Slope (ft/ft)	Velocity (ft/sec)	Capacity (cfs)	Description
6.0					**Direct Entry, Direct**

Summary for Subcatchment PR-C1: Essex

Runoff = 1.34 cfs @ 12.08 hrs, Volume= 0.100 af, Depth= 2.56"

Runoff by SCS TR-20 method, UH=SCS, Weighted-CN, Time Span= 0.00-48.00 hrs, dt= 0.01 hrs
Type III 24-hr 2-Year Rainfall=3.11"

Area (sf)	CN	Description
2,306	69	50-75% Grass cover, Fair, HSG B
18,181	98	Paved parking, HSG B
20,487	95	Weighted Average
2,306		11.26% Pervious Area
18,181		88.74% Impervious Area

Tc (min)	Length (feet)	Slope (ft/ft)	Velocity (ft/sec)	Capacity (cfs)	Description
6.0					**Direct Entry, Direct**

Summary for Subcatchment PR-D1: STA 34-->49

Runoff = 2.81 cfs @ 12.09 hrs, Volume= 0.206 af, Depth= 1.15"

Runoff by SCS TR-20 method, UH=SCS, Weighted-CN, Time Span= 0.00-48.00 hrs, dt= 0.01 hrs
Type III 24-hr 2-Year Rainfall=3.11"

Area (sf)	CN	Description
67,573	69	50-75% Grass cover, Fair, HSG B
21,377	98	Paved parking, HSG B
4,958	96	Gravel surface, HSG B
93,908	77	Weighted Average
72,531		77.24% Pervious Area
21,377		22.76% Impervious Area

Tc (min)	Length (feet)	Slope (ft/ft)	Velocity (ft/sec)	Capacity (cfs)	Description
6.0					**Direct Entry, Direct**

Summary for Subcatchment PR-E1: STA 39-->48

Runoff = 0.57 cfs @ 12.10 hrs, Volume= 0.047 af, Depth= 0.73"

Runoff by SCS TR-20 method, UH=SCS, Weighted-CN, Time Span= 0.00-48.00 hrs, dt= 0.01 hrs
Type III 24-hr 2-Year Rainfall=3.11"

Area (sf)	CN	Description
33,189	69	50-75% Grass cover, Fair, HSG B
541	98	Paved parking, HSG B
33,730	69	Weighted Average
33,189		98.40% Pervious Area
541		1.60% Impervious Area

Tc (min)	Length (feet)	Slope (ft/ft)	Velocity (ft/sec)	Capacity (cfs)	Description
6.0					**Direct Entry, Direct**

Summary for Subcatchment PR-F1: STA 49-->51

Runoff = 0.52 cfs @ 12.09 hrs, Volume= 0.037 af, Depth= 1.27"

Runoff by SCS TR-20 method, UH=SCS, Weighted-CN, Time Span= 0.00-48.00 hrs, dt= 0.01 hrs
Type III 24-hr 2-Year Rainfall=3.11"

Area (sf)	CN	Description
5,957	49	50-75% Grass cover, Fair, HSG A
9,477	98	Paved parking, HSG A
15,434	79	Weighted Average
5,957		38.60% Pervious Area
9,477		61.40% Impervious Area

Tc (min)	Length (feet)	Slope (ft/ft)	Velocity (ft/sec)	Capacity (cfs)	Description
6.0					**Direct Entry, Direct**

Summary for Subcatchment PR-F2: STA 51->55

Runoff = 0.19 cfs @ 12.13 hrs, Volume= 0.025 af, Depth= 0.37"

Runoff by SCS TR-20 method, UH=SCS, Weighted-CN, Time Span= 0.00-48.00 hrs, dt= 0.01 hrs
Type III 24-hr 2-Year Rainfall=3.11"

Area (sf)	CN	Description
27,588	49	50-75% Grass cover, Fair, HSG A
7,921	98	Paved parking, HSG A
35,509	60	Weighted Average
27,588		77.69% Pervious Area
7,921		22.31% Impervious Area

Tc (min)	Length (feet)	Slope (ft/ft)	Velocity (ft/sec)	Capacity (cfs)	Description
6.0					**Direct Entry, Direct**

Summary for Subcatchment PR-F3: STA 55-->58

Runoff = 0.17 cfs @ 12.11 hrs, Volume= 0.015 af, Depth= 0.64"

Runoff by SCS TR-20 method, UH=SCS, Weighted-CN, Time Span= 0.00-48.00 hrs, dt= 0.01 hrs
Type III 24-hr 2-Year Rainfall=3.11"

Area (sf)	CN	Description
7,695	49	50-75% Grass cover, Fair, HSG A
4,464	98	Paved parking, HSG A
12,159	67	Weighted Average
7,695		63.29% Pervious Area
4,464		36.71% Impervious Area

Tc (min)	Length (feet)	Slope (ft/ft)	Velocity (ft/sec)	Capacity (cfs)	Description
6.0					**Direct Entry, Direct**

Summary for Subcatchment PR-F4: STA 58-->62

Runoff = 0.27 cfs @ 12.10 hrs, Volume= 0.022 af, Depth= 0.78"

Runoff by SCS TR-20 method, UH=SCS, Weighted-CN, Time Span= 0.00-48.00 hrs, dt= 0.01 hrs
Type III 24-hr 2-Year Rainfall=3.11"

Area (sf)	CN	Description
8,240	49	50-75% Grass cover, Fair, HSG A
6,412	98	Paved parking, HSG A
14,652	70	Weighted Average
8,240		56.24% Pervious Area
6,412		43.76% Impervious Area

Tc (min)	Length (feet)	Slope (ft/ft)	Velocity (ft/sec)	Capacity (cfs)	Description
6.0					**Direct Entry, Direct**

Summary for Subcatchment PR-F5: STA 62-->67

Runoff = 0.15 cfs @ 12.11 hrs, Volume= 0.013 af, Depth= 0.64"

Runoff by SCS TR-20 method, UH=SCS, Weighted-CN, Time Span= 0.00-48.00 hrs, dt= 0.01 hrs
Type III 24-hr 2-Year Rainfall=3.11"

Area (sf)	CN	Description
6,667	49	50-75% Grass cover, Fair, HSG A
3,972	98	Paved parking, HSG A
10,639	67	Weighted Average
6,667		62.67% Pervious Area
3,972		37.33% Impervious Area

Tc (min)	Length (feet)	Slope (ft/ft)	Velocity (ft/sec)	Capacity (cfs)	Description
6.0					**Direct Entry, Direct**

Summary for Subcatchment PR-F6: STA63-->67

Runoff = 0.55 cfs @ 12.10 hrs, Volume= 0.045 af, Depth= 0.73"

Runoff by SCS TR-20 method, UH=SCS, Weighted-CN, Time Span= 0.00-48.00 hrs, dt= 0.01 hrs
Type III 24-hr 2-Year Rainfall=3.11"

Area (sf)	CN	Description
19,270	49	50-75% Grass cover, Fair, HSG A
13,311	98	Paved parking, HSG A
32,581	69	Weighted Average
19,270		59.14% Pervious Area
13,311		40.86% Impervious Area

Tc (min)	Length (feet)	Slope (ft/ft)	Velocity (ft/sec)	Capacity (cfs)	Description
6.0					**Direct Entry, Direct**

Summary for Subcatchment PR-F7: STA 70-->74

Runoff = 0.23 cfs @ 12.10 hrs, Volume= 0.017 af, Depth= 0.93"

Runoff by SCS TR-20 method, UH=SCS, Weighted-CN, Time Span= 0.00-48.00 hrs, dt= 0.01 hrs
Type III 24-hr 2-Year Rainfall=3.11"

Area (sf)	CN	Description
5,119	49	50-75% Grass cover, Fair, HSG A
4,727	98	Paved parking, HSG A
9,846	73	Weighted Average
5,119		51.99% Pervious Area
4,727		48.01% Impervious Area

Tc (min)	Length (feet)	Slope (ft/ft)	Velocity (ft/sec)	Capacity (cfs)	Description
6.0					**Direct Entry, Direct**

Summary for Subcatchment PR-G1: STA 57-->62

Runoff = 0.00 cfs @ 13.78 hrs, Volume= 0.002 af, Depth= 0.09"

Runoff by SCS TR-20 method, UH=SCS, Weighted-CN, Time Span= 0.00-48.00 hrs, dt= 0.01 hrs
Type III 24-hr 2-Year Rainfall=3.11"

Area (sf)	CN	Description
9,759	49	50-75% Grass cover, Fair, HSG A
9,759		100.00% Pervious Area

Tc (min)	Length (feet)	Slope (ft/ft)	Velocity (ft/sec)	Capacity (cfs)	Description
6.0					**Direct Entry, Direct**

Summary for Subcatchment PR-H1: STA 55-->61

Runoff = 0.03 cfs @ 12.37 hrs, Volume= 0.007 af, Depth= 0.20"

Runoff by SCS TR-20 method, UH=SCS, Weighted-CN, Time Span= 0.00-48.00 hrs, dt= 0.01 hrs
Type III 24-hr 2-Year Rainfall=3.11"

Area (sf)	CN	Description
16,666	49	50-75% Grass cover, Fair, HSG A
1,798	96	Gravel surface, HSG A
18,464	54	Weighted Average
18,464		100.00% Pervious Area

Tc (min)	Length (feet)	Slope (ft/ft)	Velocity (ft/sec)	Capacity (cfs)	Description
6.0					**Direct Entry, Direct**

Summary for Subcatchment PR-H2: STA 62-->71

Runoff = 0.03 cfs @ 12.40 hrs, Volume= 0.007 af, Depth= 0.18"

Runoff by SCS TR-20 method, UH=SCS, Weighted-CN, Time Span= 0.00-48.00 hrs, dt= 0.01 hrs
Type III 24-hr 2-Year Rainfall=3.11"

Area (sf)	CN	Description
19,380	49	50-75% Grass cover, Fair, HSG A
1,943	98	Paved parking, HSG A
21,323	53	Weighted Average
19,380		90.89% Pervious Area
1,943		9.11% Impervious Area

Tc (min)	Length (feet)	Slope (ft/ft)	Velocity (ft/sec)	Capacity (cfs)	Description
6.0					**Direct Entry, Direct**

Summary for Subcatchment PR-I1: STA 64-->70

Runoff = 0.00 cfs @ 12.50 hrs, Volume= 0.003 af, Depth= 0.11"

Runoff by SCS TR-20 method, UH=SCS, Weighted-CN, Time Span= 0.00-48.00 hrs, dt= 0.01 hrs
Type III 24-hr 2-Year Rainfall=3.11"

Area (sf)	CN	Description
12,506	49	50-75% Grass cover, Fair, HSG A
191	98	Paved parking, HSG A
12,697	50	Weighted Average
12,506		98.50% Pervious Area
191		1.50% Impervious Area

Tc (min)	Length (feet)	Slope (ft/ft)	Velocity (ft/sec)	Capacity (cfs)	Description
6.0					**Direct Entry, Direct**

Summary for Pond 1P: STA 30

Inflow Area = 0.578 ac, 41.15% Impervious, Inflow Depth = 1.40" for 2-Year event
Inflow = 0.94 cfs @ 12.09 hrs, Volume= 0.067 af
Outflow = 0.07 cfs @ 13.94 hrs, Volume= 0.067 af, Atten= 93%, Lag= 110.8 min
Discarded = 0.03 cfs @ 13.94 hrs, Volume= 0.056 af
Primary = 0.04 cfs @ 13.94 hrs, Volume= 0.011 af
Secondary = 0.00 cfs @ 0.00 hrs, Volume= 0.000 af

Routing by Dyn-Stor-Ind method, Time Span= 0.00-48.00 hrs, dt= 0.01 hrs / 3
Peak Elev= 50.53' @ 13.94 hrs Surf.Area= 2,184 sf Storage= 1,589 cf

Plug-Flow detention time= (not calculated: outflow precedes inflow)
Center-of-Mass det. time= 565.6 min (1,406.6 - 841.0)

Volume	Invert	Avail.Storage	Storage Description
#1	49.50'	6,207 cf	**Custom Stage Data (Irregular)**Listed below (Recalc)

Elevation (feet)	Surf.Area (sq-ft)	Perim. (feet)	Inc.Store (cubic-feet)	Cum.Store (cubic-feet)	Wet.Area (sq-ft)
49.50	975	350.2	0	0	975
50.50	2,149	423.2	1,524	1,524	5,484
51.50	3,467	449.8	2,782	4,306	7,383
52.00	4,149	459.2	1,901	6,207	8,100

Device	Routing	Invert	Outlet Devices
#1	Primary	49.50'	**12.0" Round RCP_Round 12"** L= 295.0' RCP, rounded edge headwall, Ke= 0.100 Inlet / Outlet Invert= 49.50' / 46.55' S= 0.0100 '/' Cc= 0.900 n= 0.013 Concrete pipe, bends & connections, Flow Area= 0.79 sf
#2	Device 1	50.40'	**4.0" Vert. Orifice/Grate** C= 0.600
#3	Device 1	51.60'	**48.0" x 48.0" Horiz. Orifice/Grate** C= 0.600 Limited to weir flow at low heads
#4	Secondary	51.99'	**14.0' long x 90.0' breadth Broad-Crested Rectangular Weir** Head (feet) 0.20 0.40 0.60 0.80 1.00 1.20 1.40 1.60 Coef. (English) 2.68 2.70 2.70 2.64 2.63 2.64 2.64 2.63
#5	Discarded	49.50'	**0.230 in/hr Exfiltration over Wetted area**

Discarded OutFlow Max=0.03 cfs @ 13.94 hrs HW=50.53' (Free Discharge)
└**5=Exfiltration** (Exfiltration Controls 0.03 cfs)

Primary OutFlow Max=0.04 cfs @ 13.94 hrs HW=50.53' TW=0.00' (Dynamic Tailwater)
└**1=RCP_Round 12"** (Passes 0.04 cfs of 3.26 cfs potential flow)
  ├**2=Orifice/Grate** (Orifice Controls 0.04 cfs @ 1.23 fps)
  └**3=Orifice/Grate** (Controls 0.00 cfs)

Secondary OutFlow Max=0.00 cfs @ 0.00 hrs HW=49.50' TW=0.00' (Dynamic Tailwater)
└**4=Broad-Crested Rectangular Weir** (Controls 0.00 cfs)

Summary for Pond 2ESF: Southeast Sediment Forebay

Volume	Invert	Avail.Storage	Storage Description
#1	49.75'	76 cf	**Custom Stage Data (Irregular)** Listed below (Recalc)

Elevation (feet)	Surf.Area (sq-ft)	Perim. (feet)	Inc.Store (cubic-feet)	Cum.Store (cubic-feet)	Wet.Area (sq-ft)
49.75	35	21.3	0	0	35
50.75	127	40.2	76	76	132

Summary for Pond 2P: STA 37

Inflow Area = 2.156 ac, 22.76% Impervious, Inflow Depth = 1.15" for 2-Year event
Inflow = 2.81 cfs @ 12.09 hrs, Volume= 0.206 af
Outflow = 2.63 cfs @ 12.12 hrs, Volume= 0.206 af, Atten= 6%, Lag= 1.9 min
Discarded = 2.63 cfs @ 12.12 hrs, Volume= 0.206 af
Primary = 0.00 cfs @ 0.00 hrs, Volume= 0.000 af

Routing by Dyn-Stor-Ind method, Time Span= 0.00-48.00 hrs, dt= 0.01 hrs / 3

Peak Elev= 49.95' @ 12.12 hrs Surf.Area= 1,658 sf Storage= 289 cf

Plug-Flow detention time= (not calculated: outflow precedes inflow)
Center-of-Mass det. time= 0.7 min (854.7 - 854.0)

Volume	Invert	Avail.Storage	Storage Description
#1	49.75'	5,367 cf	**Custom Stage Data (Irregular)**Listed below (Recalc)

Elevation (feet)	Surf.Area (sq-ft)	Perim. (feet)	Inc.Store (cubic-feet)	Cum.Store (cubic-feet)	Wet.Area (sq-ft)
49.75	1,222	233.8	0	0	1,222
50.25	2,424	616.0	895	895	27,069
50.75	3,355	625.4	1,438	2,333	28,048
51.50	4,778	639.5	3,034	5,367	29,545

Device	Routing	Invert	Outlet Devices
#1	Discarded	49.75'	**12.850 in/hr Exfiltration over Wetted area**
#2	Primary	51.00'	**8.0' long x 55.0' breadth Broad-Crested Rectangular Weir**
			Head (feet) 0.20 0.40 0.60 0.80 1.00 1.20 1.40 1.60
			Coef. (English) 2.68 2.70 2.70 2.64 2.63 2.64 2.64 2.63

Discarded OutFlow Max=2.63 cfs @ 12.12 hrs HW=49.95' (Free Discharge)
↑—**1=Exfiltration** (Exfiltration Controls 2.63 cfs)

Primary OutFlow Max=0.00 cfs @ 0.00 hrs HW=49.75' TW=0.00' (Dynamic Tailwater)
↑—**2=Broad-Crested Rectangular Weir** (Controls 0.00 cfs)

Summary for Pond 2WSF: Northwest Sediment Forebay

Volume	Invert	Avail.Storage	Storage Description
#1	49.75'	180 cf	**Custom Stage Data (Irregular)**Listed below (Recalc)

Elevation (feet)	Surf.Area (sq-ft)	Perim. (feet)	Inc.Store (cubic-feet)	Cum.Store (cubic-feet)	Wet.Area (sq-ft)
49.75	108	42.0	0	0	108
50.75	263	60.9	180	180	271

Summary for Pond 3P: STA 52

Inflow Area = 2.649 ac, 35.37% Impervious, Inflow Depth = 0.12" for 2-Year event
Inflow = 0.19 cfs @ 12.13 hrs, Volume= 0.025 af
Outflow = 0.05 cfs @ 13.00 hrs, Volume= 0.025 af, Atten= 74%, Lag= 52.0 min
Discarded = 0.05 cfs @ 13.00 hrs, Volume= 0.025 af
Primary = 0.00 cfs @ 0.00 hrs, Volume= 0.000 af

Routing by Dyn-Stor-Ind method, Time Span= 0.00-48.00 hrs, dt= 0.01 hrs / 3
Peak Elev= 57.85' @ 13.00 hrs Surf.Area= 836 sf Storage= 230 cf

Plug-Flow detention time= 58.6 min calculated for 0.025 af (100% of inflow)
Center-of-Mass det. time= 58.6 min (983.1 - 924.4)

Volume	Invert	Avail.Storage	Storage Description
#1	57.50'	3,378 cf	**Custom Stage Data (Irregular)**Listed below (Recalc)

Elevation (feet)	Surf.Area (sq-ft)	Perim. (feet)	Inc.Store (cubic-feet)	Cum.Store (cubic-feet)	Wet.Area (sq-ft)
57.50	501	267.0	0	0	501
58.50	1,697	425.1	1,040	1,040	9,215
59.00	2,342	435.5	1,005	2,045	9,959
59.50	3,002	444.9	1,333	3,378	10,654

Device	Routing	Invert	Outlet Devices
#1	Discarded	57.50'	**0.700 in/hr Exfiltration over Wetted area**
#2	Primary	59.00'	**9.0' long x 100.0' breadth Broad-Crested Rectangular Weir**
			Head (feet) 0.20 0.40 0.60 0.80 1.00 1.20 1.40 1.60
			Coef. (English) 2.68 2.70 2.70 2.64 2.63 2.64 2.64 2.63

Discarded OutFlow Max=0.05 cfs @ 13.00 hrs HW=57.85' (Free Discharge)
↑—**1=Exfiltration** (Exfiltration Controls 0.05 cfs)

Primary OutFlow Max=0.00 cfs @ 0.00 hrs HW=57.50' TW=0.00' (Dynamic Tailwater)
↑—**2=Broad-Crested Rectangular Weir** (Controls 0.00 cfs)

Summary for Pond 4P: STA 30

Inflow Area = 1.834 ac, 41.17% Impervious, Inflow Depth = 0.10" for 2-Year event
Inflow = 0.17 cfs @ 12.11 hrs, Volume= 0.015 af
Outflow = 0.09 cfs @ 12.34 hrs, Volume= 0.015 af, Atten= 46%, Lag= 14.3 min
Discarded = 0.09 cfs @ 12.34 hrs, Volume= 0.015 af
Primary = 0.00 cfs @ 0.00 hrs, Volume= 0.000 af

Routing by Dyn-Stor-Ind method, Time Span= 0.00-48.00 hrs, dt= 0.01 hrs / 3
Peak Elev= 59.72' @ 12.34 hrs Surf.Area= 418 sf Storage= 78 cf

Plug-Flow detention time= (not calculated: outflow precedes inflow)
Center-of-Mass det. time= 6.8 min (896.4 - 889.6)

Volume	Invert	Avail.Storage	Storage Description
#1	59.50'	2,096 cf	**Custom Stage Data (Irregular)**Listed below (Recalc)

Elevation (feet)	Surf.Area (sq-ft)	Perim. (feet)	Inc.Store (cubic-feet)	Cum.Store (cubic-feet)	Wet.Area (sq-ft)
59.50	294	178.7	0	0	294
60.50	1,031	429.0	625	625	12,402
61.00	1,697	445.9	675	1,300	13,599
61.50	1,488	215.0	796	2,096	25,744

Device	Routing	Invert	Outlet Devices
#1	Discarded	59.50'	**1.900 in/hr Exfiltration over Wetted area**
#2	Primary	61.00'	**3.5' long x 50.0' breadth Broad-Crested Rectangular Weir**
			Head (feet) 0.20 0.40 0.60 0.80 1.00 1.20 1.40 1.60

Coef. (English) 2.68 2.70 2.70 2.64 2.63 2.64 2.64 2.63

Discarded OutFlow Max=0.09 cfs @ 12.34 hrs HW=59.72' (Free Discharge)
1=Exfiltration (Exfiltration Controls 0.09 cfs)

Primary OutFlow Max=0.00 cfs @ 0.00 hrs HW=59.50' TW=57.50' (Dynamic Tailwater)
2=Broad-Crested Rectangular Weir (Controls 0.00 cfs)

Summary for Pond 5P: STA 30

Inflow Area = 1.555 ac, 41.97% Impervious, Inflow Depth = 0.17" for 2-Year event
Inflow = 0.27 cfs @ 12.10 hrs, Volume= 0.022 af
Outflow = 0.11 cfs @ 12.43 hrs, Volume= 0.022 af, Atten= 59%, Lag= 19.5 min
Discarded = 0.11 cfs @ 12.43 hrs, Volume= 0.022 af
Primary = 0.00 cfs @ 0.00 hrs, Volume= 0.000 af

Routing by Dyn-Stor-Ind method, Time Span= 0.00-48.00 hrs, dt= 0.01 hrs / 3
Peak Elev= 62.22' @ 12.43 hrs Surf.Area= 806 sf Storage= 151 cf

Plug-Flow detention time= (not calculated: outflow precedes inflow)
Center-of-Mass det. time= 8.7 min (886.6 - 877.9)

Volume	Invert	Avail.Storage	Storage Description
#1	62.00'	2,220 cf	**Custom Stage Data (Irregular)** Listed below (Recalc)

Elevation (feet)	Surf.Area (sq-ft)	Perim. (feet)	Inc.Store (cubic-feet)	Cum.Store (cubic-feet)	Wet.Area (sq-ft)
62.00	566	373.9	0	0	566
62.50	1,169	410.0	425	425	2,826
63.00	1,798	429.2	736	1,161	4,126
63.50	2,456	448.0	1,059	2,220	5,456

Device	Routing	Invert	Outlet Devices
#1	Discarded	62.00'	**3.100 in/hr Exfiltration over Wetted area**
#2	Primary	63.00'	**5.0' long x 40.0' breadth Broad-Crested Rectangular Weir**
			Head (feet) 0.20 0.40 0.60 0.80 1.00 1.20 1.40 1.60
			Coef. (English) 2.68 2.70 2.70 2.64 2.63 2.64 2.64 2.63

Discarded OutFlow Max=0.11 cfs @ 12.43 hrs HW=62.22' (Free Discharge)
1=Exfiltration (Exfiltration Controls 0.11 cfs)

Primary OutFlow Max=0.00 cfs @ 0.00 hrs HW=62.00' TW=59.50' (Dynamic Tailwater)
2=Broad-Crested Rectangular Weir (Controls 0.00 cfs)

Summary for Pond 6P: STA 30

Inflow Area = 1.218 ac, 41.48% Impervious, Inflow Depth = 0.13" for 2-Year event
Inflow = 0.15 cfs @ 12.11 hrs, Volume= 0.013 af
Outflow = 0.03 cfs @ 12.63 hrs, Volume= 0.013 af, Atten= 78%, Lag= 31.5 min
Discarded = 0.03 cfs @ 12.63 hrs, Volume= 0.013 af
Primary = 0.00 cfs @ 12.63 hrs, Volume= 0.000 af
Secondary = 0.00 cfs @ 0.00 hrs, Volume= 0.000 af

Routing by Dyn-Stor-Ind method, Time Span= 0.00-48.00 hrs, dt= 0.01 hrs / 3
Peak Elev= 64.30' @ 12.63 hrs Surf.Area= 316 sf Storage= 146 cf

Plug-Flow detention time= (not calculated: outflow precedes inflow)
Center-of-Mass det. time= 45.4 min (935.0 - 889.6)

Volume	Invert	Avail.Storage	Storage Description
#1	63.50'	531 cf	**Custom Stage Data (Irregular)** Listed below (Recalc)

Elevation (feet)	Surf.Area (sq-ft)	Perim. (feet)	Inc.Store (cubic-feet)	Cum.Store (cubic-feet)	Wet.Area (sq-ft)
63.50	75	91.6	0	0	75
64.50	401	119.7	216	216	559
65.00	588	129.1	246	462	755
65.10	789	138.5	69	531	956

Device	Routing	Invert	Outlet Devices
#1	Primary	63.00'	**12.0" Round RCP_Round 12"** L= 94.0' RCP, square edge headwall, Ke= 0.500 Inlet / Outlet Invert= 63.00' / 62.50' S= 0.0053 '/' Cc= 0.900 n= 0.011 Concrete pipe, straight & clean, Flow Area= 0.79 sf
#2	Device 1	64.30'	**8.0" W x 3.0" H Vert. Orifice/Grate** C= 0.600
#3	Device 1	64.80'	**48.0" x 48.0" Horiz. Orifice/Grate** C= 0.600 Limited to weir flow at low heads
#4	Secondary	65.00'	**8.0' long x 20.0' breadth Broad-Crested Rectangular Weir** Head (feet) 0.20 0.40 0.60 0.80 1.00 1.20 1.40 1.60 Coef. (English) 2.68 2.70 2.70 2.64 2.63 2.64 2.64 2.63
#5	Discarded	63.50'	**3.100 in/hr Exfiltration over Wetted area**

Discarded OutFlow Max=0.03 cfs @ 12.63 hrs HW=64.30' (Free Discharge)
└**5=Exfiltration** (Exfiltration Controls 0.03 cfs)

Primary OutFlow Max=0.00 cfs @ 12.63 hrs HW=64.30' TW=62.19' (Dynamic Tailwater)
└**1=RCP_Round 12"** (Passes 0.00 cfs of 3.11 cfs potential flow)
  ├**2=Orifice/Grate** (Orifice Controls 0.00 cfs @ 0.17 fps)
  └**3=Orifice/Grate** (Controls 0.00 cfs)

Secondary OutFlow Max=0.00 cfs @ 0.00 hrs HW=63.50' TW=62.00' (Dynamic Tailwater)
└**4=Broad-Crested Rectangular Weir** (Controls 0.00 cfs)

Summary for Pond 7S: STA 64

Inflow Area = 0.974 ac, 42.52% Impervious, Inflow Depth = 0.56" for 2-Year event
Inflow = 0.55 cfs @ 12.10 hrs, Volume= 0.045 af
Outflow = 0.13 cfs @ 12.57 hrs, Volume= 0.045 af, Atten= 76%, Lag= 28.2 min
Discarded = 0.13 cfs @ 12.57 hrs, Volume= 0.045 af
Primary = 0.00 cfs @ 0.00 hrs, Volume= 0.000 af

Routing by Dyn-Stor-Ind method, Time Span= 0.00-48.00 hrs, dt= 0.01 hrs / 3
Peak Elev= 65.30' @ 12.57 hrs Surf.Area= 1,767 sf Storage= 444 cf

Plug-Flow detention time= (not calculated: outflow precedes inflow)
Center-of-Mass det. time= 23.2 min (904.9 - 881.7)

Volume	Invert	Avail.Storage	Storage Description
#1	65.00'	2,019 cf	**Custom Stage Data (Irregular)**Listed below (Recalc)

Elevation (feet)	Surf.Area (sq-ft)	Perim. (feet)	Inc.Store (cubic-feet)	Cum.Store (cubic-feet)	Wet.Area (sq-ft)
65.00	1,247	616.2	0	0	1,247
65.50	2,179	625.7	846	846	2,236
66.00	1,740	292.5	978	1,823	26,583
66.10	2,187	302.9	196	2,019	27,077

Device	Routing	Invert	Outlet Devices
#1	Primary	65.99'	**20.0' long x 12.0' breadth Broad-Crested Rectangular Weir** Head (feet) 0.20 0.40 0.60 0.80 1.00 1.20 1.40 1.60 Coef. (English) 2.57 2.62 2.70 2.67 2.66 2.67 2.66 2.64
#2	Discarded	65.00'	**3.100 in/hr Exfiltration over Wetted area**

Discarded OutFlow Max=0.13 cfs @ 12.57 hrs HW=65.30' (Free Discharge)
↑—**2=Exfiltration** (Exfiltration Controls 0.13 cfs)

Primary OutFlow Max=0.00 cfs @ 0.00 hrs HW=65.00' TW=63.50' (Dynamic Tailwater)
↑—**1=Broad-Crested Rectangular Weir** (Controls 0.00 cfs)

Summary for Pond 8P: STA 71

Inflow Area = 0.226 ac, 48.01% Impervious, Inflow Depth = 0.93" for 2-Year event
Inflow = 0.23 cfs @ 12.10 hrs, Volume= 0.017 af
Outflow = 0.08 cfs @ 12.47 hrs, Volume= 0.017 af, Atten= 67%, Lag= 22.3 min
Discarded = 0.08 cfs @ 12.47 hrs, Volume= 0.017 af
Primary = 0.00 cfs @ 0.00 hrs, Volume= 0.000 af

Routing by Dyn-Stor-Ind method, Time Span= 0.00-48.00 hrs, dt= 0.01 hrs / 3
Peak Elev= 73.22' @ 12.47 hrs Surf.Area= 574 sf Storage= 178 cf

Plug-Flow detention time= (not calculated: outflow precedes inflow)
Center-of-Mass det. time= 24.9 min (892.2 - 867.3)

Volume	Invert	Avail.Storage	Storage Description
#1	72.75'	1,105 cf	**Custom Stage Data (Irregular)** Listed below (Recalc)

Elevation (feet)	Surf.Area (sq-ft)	Perim. (feet)	Inc.Store (cubic-feet)	Cum.Store (cubic-feet)	Wet.Area (sq-ft)
72.75	216	156.5	0	0	216
73.50	873	284.9	381	381	4,729
74.00	1,307	294.3	541	922	5,186
74.12	1,756	303.8	183	1,105	5,640

Device	Routing	Invert	Outlet Devices
#1	Discarded	72.75'	**1.200 in/hr Exfiltration over Wetted area**
#2	Primary	74.00'	**40.0' long x 8.5' breadth Broad-Crested Rectangular Weir** Head (feet) 0.20 0.40 0.60 0.80 1.00 1.20 1.40 1.60 1.80 2.00 2.50 3.00 3.50 4.00 4.50 5.00 5.50 Coef. (English) 2.45 2.54 2.70 2.69 2.68 2.68 2.66 2.64 2.64 2.64 2.65 2.65 2.65 2.66 2.67 2.69 2.71

Discarded OutFlow Max=0.08 cfs @ 12.47 hrs HW=73.22' (Free Discharge)
↑—**1=Exfiltration** (Exfiltration Controls 0.08 cfs)

Primary OutFlow Max=0.00 cfs @ 0.00 hrs HW=72.75' TW=65.00' (Dynamic Tailwater)
↑—**2=Broad-Crested Rectangular Weir** (Controls 0.00 cfs)

Summary for Link DP-A: RIVER

Inflow Area = 1.313 ac, 57.21% Impervious, Inflow Depth = 1.76" for 2-Year event
Inflow = 2.71 cfs @ 12.09 hrs, Volume= 0.192 af
Primary = 2.71 cfs @ 12.09 hrs, Volume= 0.192 af, Atten= 0%, Lag= 0.0 min

Primary outflow = Inflow, Time Span= 0.00-48.00 hrs, dt= 0.01 hrs

Summary for Link DP-B: Broadway CB/Canal

Inflow Area = 1.745 ac, 54.65% Impervious, Inflow Depth = 1.38" for 2-Year event
Inflow = 2.46 cfs @ 12.09 hrs, Volume= 0.200 af
Primary = 2.46 cfs @ 12.09 hrs, Volume= 0.200 af, Atten= 0%, Lag= 0.0 min

Primary outflow = Inflow, Time Span= 0.00-48.00 hrs, dt= 0.01 hrs

Summary for Link DP-C: Essex CB

Inflow Area = 0.470 ac, 88.74% Impervious, Inflow Depth = 2.56" for 2-Year event
Inflow = 1.34 cfs @ 12.08 hrs, Volume= 0.100 af
Primary = 1.34 cfs @ 12.08 hrs, Volume= 0.100 af, Atten= 0%, Lag= 0.0 min

Primary outflow = Inflow, Time Span= 0.00-48.00 hrs, dt= 0.01 hrs

Summary for Link DP-D: Wetland (NE)

Inflow Area = 2.156 ac, 22.76% Impervious, Inflow Depth = 0.00" for 2-Year event
Inflow = 0.00 cfs @ 0.00 hrs, Volume= 0.000 af
Primary = 0.00 cfs @ 0.00 hrs, Volume= 0.000 af, Atten= 0%, Lag= 0.0 min

Primary outflow = Inflow, Time Span= 0.00-48.00 hrs, dt= 0.01 hrs

Summary for Link DP-E: Wetland (SW)

Inflow Area = 0.774 ac, 1.60% Impervious, Inflow Depth = 0.73" for 2-Year event
Inflow = 0.57 cfs @ 12.10 hrs, Volume= 0.047 af
Primary = 0.57 cfs @ 12.10 hrs, Volume= 0.047 af, Atten= 0%, Lag= 0.0 min

Primary outflow = Inflow, Time Span= 0.00-48.00 hrs, dt= 0.01 hrs

Summary for Link DP-F: Haverhill

Inflow Area = 3.003 ac, 38.44% Impervious, Inflow Depth = 0.15" for 2-Year event
Inflow = 0.52 cfs @ 12.09 hrs, Volume= 0.037 af
Primary = 0.52 cfs @ 12.09 hrs, Volume= 0.037 af, Atten= 0%, Lag= 0.0 min

Primary outflow = Inflow, Time Span= 0.00-48.00 hrs, dt= 0.01 hrs

Summary for Link DP-G: Railroad Street

Inflow Area = 0.224 ac, 0.00% Impervious, Inflow Depth = 0.09" for 2-Year event
Inflow = 0.00 cfs @ 13.78 hrs, Volume= 0.002 af
Primary = 0.00 cfs @ 13.78 hrs, Volume= 0.002 af, Atten= 0%, Lag= 0.0 min

Primary outflow = Inflow, Time Span= 0.00-48.00 hrs, dt= 0.01 hrs

Summary for Link DP-H: Bourgoin Park

Inflow Area = 0.913 ac, 4.88% Impervious, Inflow Depth = 0.19" for 2-Year event
Inflow = 0.06 cfs @ 12.39 hrs, Volume= 0.014 af
Primary = 0.06 cfs @ 12.39 hrs, Volume= 0.014 af, Atten= 0%, Lag= 0.0 min

Primary outflow = Inflow, Time Span= 0.00-48.00 hrs, dt= 0.01 hrs

Summary for Link DP-I: 127 May St

Inflow Area = 0.291 ac, 1.50% Impervious, Inflow Depth = 0.11" for 2-Year event
Inflow = 0.00 cfs @ 12.50 hrs, Volume= 0.003 af
Primary = 0.00 cfs @ 12.50 hrs, Volume= 0.003 af, Atten= 0%, Lag= 0.0 min

Primary outflow = Inflow, Time Span= 0.00-48.00 hrs, dt= 0.01 hrs

Summary for Subcatchment PR-A1: STA 1-->14

Runoff = 5.17 cfs @ 12.09 hrs, Volume= 0.372 af, Depth= 3.40"

Runoff by SCS TR-20 method, UH=SCS, Weighted-CN, Time Span= 0.00-48.00 hrs, dt= 0.01 hrs
Type III 24-hr 10-Year Rainfall=4.93"

Area (sf)	CN	Description
24,468	69	50-75% Grass cover, Fair, HSG B
32,708	98	Paved parking, HSG B
57,176	86	Weighted Average
24,468		42.79% Pervious Area
32,708		57.21% Impervious Area

Tc (min)	Length (feet)	Slope (ft/ft)	Velocity (ft/sec)	Capacity (cfs)	Description
6.0					**Direct Entry, Direct**

Summary for Subcatchment PR-B1: STA 12-->25

Runoff = 2.36 cfs @ 12.08 hrs, Volume= 0.191 af, Depth= 4.69"

Runoff by SCS TR-20 method, UH=SCS, Weighted-CN, Time Span= 0.00-48.00 hrs, dt= 0.01 hrs
Type III 24-hr 10-Year Rainfall=4.93"

Area (sf)	CN	Description
204	49	50-75% Grass cover, Fair, HSG A
21,088	98	Paved parking, HSG A
21,292	98	Weighted Average
204		0.96% Pervious Area
21,088		99.04% Impervious Area

Tc (min)	Length (feet)	Slope (ft/ft)	Velocity (ft/sec)	Capacity (cfs)	Description
6.0					**Direct Entry, Direct**

Summary for Subcatchment PR-B2: STA 25-->32

Runoff = 1.98 cfs @ 12.09 hrs, Volume= 0.141 af, Depth= 2.92"

Runoff by SCS TR-20 method, UH=SCS, Weighted-CN, Time Span= 0.00-48.00 hrs, dt= 0.01 hrs
Type III 24-hr 10-Year Rainfall=4.93"

Area (sf)	CN	Description
14,824	69	50-75% Grass cover, Fair, HSG B
10,366	98	Paved parking, HSG B
25,190	81	Weighted Average
14,824		58.85% Pervious Area
10,366		41.15% Impervious Area

Tc (min)	Length (feet)	Slope (ft/ft)	Velocity (ft/sec)	Capacity (cfs)	Description
6.0					**Direct Entry, Direct**

Summary for Subcatchment PR-B3: STA 25 -->32

Runoff = 2.18 cfs @ 12.09 hrs, Volume= 0.155 af, Depth= 2.74"

Runoff by SCS TR-20 method, UH=SCS, Weighted-CN, Time Span= 0.00-48.00 hrs, dt= 0.01 hrs
Type III 24-hr 10-Year Rainfall=4.93"

Area (sf)	CN	Description
19,443	69	50-75% Grass cover, Fair, HSG B
10,082	98	Paved parking, HSG B
29,525	79	Weighted Average
19,443		65.85% Pervious Area
10,082		34.15% Impervious Area

Tc (min)	Length (feet)	Slope (ft/ft)	Velocity (ft/sec)	Capacity (cfs)	Description
6.0					**Direct Entry, Direct**

Summary for Subcatchment PR-C1: Essex

Runoff = 2.20 cfs @ 12.08 hrs, Volume= 0.170 af, Depth= 4.35"

Runoff by SCS TR-20 method, UH=SCS, Weighted-CN, Time Span= 0.00-48.00 hrs, dt= 0.01 hrs
Type III 24-hr 10-Year Rainfall=4.93"

Area (sf)	CN	Description
2,306	69	50-75% Grass cover, Fair, HSG B
18,181	98	Paved parking, HSG B
20,487	95	Weighted Average
2,306		11.26% Pervious Area
18,181		88.74% Impervious Area

Tc (min)	Length (feet)	Slope (ft/ft)	Velocity (ft/sec)	Capacity (cfs)	Description
6.0					**Direct Entry, Direct**

Summary for Subcatchment PR-D1: STA 34-->49

Runoff = 6.48 cfs @ 12.09 hrs, Volume= 0.461 af, Depth= 2.56"

Runoff by SCS TR-20 method, UH=SCS, Weighted-CN, Time Span= 0.00-48.00 hrs, dt= 0.01 hrs
Type III 24-hr 10-Year Rainfall=4.93"

Area (sf)	CN	Description
67,573	69	50-75% Grass cover, Fair, HSG B
21,377	98	Paved parking, HSG B
4,958	96	Gravel surface, HSG B
93,908	77	Weighted Average
72,531		77.24% Pervious Area
21,377		22.76% Impervious Area

Tc (min)	Length (feet)	Slope (ft/ft)	Velocity (ft/sec)	Capacity (cfs)	Description
6.0					**Direct Entry, Direct**

Summary for Subcatchment PR-E1: STA 39-->48

Runoff = 1.69 cfs @ 12.09 hrs, Volume= 0.123 af, Depth= 1.91"

Runoff by SCS TR-20 method, UH=SCS, Weighted-CN, Time Span= 0.00-48.00 hrs, dt= 0.01 hrs
Type III 24-hr 10-Year Rainfall=4.93"

Area (sf)	CN	Description
33,189	69	50-75% Grass cover, Fair, HSG B
541	98	Paved parking, HSG B
33,730	69	Weighted Average
33,189		98.40% Pervious Area
541		1.60% Impervious Area

Tc (min)	Length (feet)	Slope (ft/ft)	Velocity (ft/sec)	Capacity (cfs)	Description
6.0					**Direct Entry, Direct**

Summary for Subcatchment PR-F1: STA 49-->51

Runoff = 1.14 cfs @ 12.09 hrs, Volume= 0.081 af, Depth= 2.74"

Runoff by SCS TR-20 method, UH=SCS, Weighted-CN, Time Span= 0.00-48.00 hrs, dt= 0.01 hrs
Type III 24-hr 10-Year Rainfall=4.93"

Area (sf)	CN	Description
5,957	49	50-75% Grass cover, Fair, HSG A
9,477	98	Paved parking, HSG A
15,434	79	Weighted Average
5,957		38.60% Pervious Area
9,477		61.40% Impervious Area

Tc (min)	Length (feet)	Slope (ft/ft)	Velocity (ft/sec)	Capacity (cfs)	Description
6.0					**Direct Entry, Direct**

Summary for Subcatchment PR-F2: STA 51->55

Runoff = 1.07 cfs @ 12.10 hrs, Volume= 0.086 af, Depth= 1.26"

Runoff by SCS TR-20 method, UH=SCS, Weighted-CN, Time Span= 0.00-48.00 hrs, dt= 0.01 hrs
Type III 24-hr 10-Year Rainfall=4.93"

Area (sf)	CN	Description
27,588	49	50-75% Grass cover, Fair, HSG A
7,921	98	Paved parking, HSG A
35,509	60	Weighted Average
27,588		77.69% Pervious Area
7,921		22.31% Impervious Area

Tc (min)	Length (feet)	Slope (ft/ft)	Velocity (ft/sec)	Capacity (cfs)	Description
6.0					**Direct Entry, Direct**

Summary for Subcatchment PR-F3: STA 55-->58

Runoff = 0.55 cfs @ 12.09 hrs, Volume= 0.041 af, Depth= 1.75"

Runoff by SCS TR-20 method, UH=SCS, Weighted-CN, Time Span= 0.00-48.00 hrs, dt= 0.01 hrs
Type III 24-hr 10-Year Rainfall=4.93"

Area (sf)	CN	Description
7,695	49	50-75% Grass cover, Fair, HSG A
4,464	98	Paved parking, HSG A
12,159	67	Weighted Average
7,695		63.29% Pervious Area
4,464		36.71% Impervious Area

Tc (min)	Length (feet)	Slope (ft/ft)	Velocity (ft/sec)	Capacity (cfs)	Description
6.0					**Direct Entry, Direct**

Summary for Subcatchment PR-F4: STA 58-->62

Runoff = 0.77 cfs @ 12.09 hrs, Volume= 0.056 af, Depth= 1.98"

Runoff by SCS TR-20 method, UH=SCS, Weighted-CN, Time Span= 0.00-48.00 hrs, dt= 0.01 hrs
Type III 24-hr 10-Year Rainfall=4.93"

Area (sf)	CN	Description
8,240	49	50-75% Grass cover, Fair, HSG A
6,412	98	Paved parking, HSG A
14,652	70	Weighted Average
8,240		56.24% Pervious Area
6,412		43.76% Impervious Area

Tc (min)	Length (feet)	Slope (ft/ft)	Velocity (ft/sec)	Capacity (cfs)	Description
6.0					**Direct Entry, Direct**

Summary for Subcatchment PR-F5: STA 62-->67

Runoff = 0.48 cfs @ 12.09 hrs, Volume= 0.036 af, Depth= 1.75"

Runoff by SCS TR-20 method, UH=SCS, Weighted-CN, Time Span= 0.00-48.00 hrs, dt= 0.01 hrs
Type III 24-hr 10-Year Rainfall=4.93"

Area (sf)	CN	Description
6,667	49	50-75% Grass cover, Fair, HSG A
3,972	98	Paved parking, HSG A
10,639	67	Weighted Average
6,667		62.67% Pervious Area
3,972		37.33% Impervious Area

Tc (min)	Length (feet)	Slope (ft/ft)	Velocity (ft/sec)	Capacity (cfs)	Description
6.0					**Direct Entry, Direct**

Summary for Subcatchment PR-F6: STA63-->67

Runoff = 1.63 cfs @ 12.09 hrs, Volume= 0.119 af, Depth= 1.91"

Runoff by SCS TR-20 method, UH=SCS, Weighted-CN, Time Span= 0.00-48.00 hrs, dt= 0.01 hrs
Type III 24-hr 10-Year Rainfall=4.93"

Area (sf)	CN	Description
19,270	49	50-75% Grass cover, Fair, HSG A
13,311	98	Paved parking, HSG A
32,581	69	Weighted Average
19,270		59.14% Pervious Area
13,311		40.86% Impervious Area

Tc (min)	Length (feet)	Slope (ft/ft)	Velocity (ft/sec)	Capacity (cfs)	Description
6.0					**Direct Entry, Direct**

Summary for Subcatchment PR-F7: STA 70-->74

Runoff = 0.59 cfs @ 12.09 hrs, Volume= 0.042 af, Depth= 2.23"

Runoff by SCS TR-20 method, UH=SCS, Weighted-CN, Time Span= 0.00-48.00 hrs, dt= 0.01 hrs
Type III 24-hr 10-Year Rainfall=4.93"

Area (sf)	CN	Description
5,119	49	50-75% Grass cover, Fair, HSG A
4,727	98	Paved parking, HSG A
9,846	73	Weighted Average
5,119		51.99% Pervious Area
4,727		48.01% Impervious Area

Tc (min)	Length (feet)	Slope (ft/ft)	Velocity (ft/sec)	Capacity (cfs)	Description
6.0					**Direct Entry, Direct**

Summary for Subcatchment PR-G1: STA 57-->62

Runoff = 0.09 cfs @ 12.13 hrs, Volume= 0.011 af, Depth= 0.61"

Runoff by SCS TR-20 method, UH=SCS, Weighted-CN, Time Span= 0.00-48.00 hrs, dt= 0.01 hrs
Type III 24-hr 10-Year Rainfall=4.93"

Area (sf)	CN	Description
9,759	49	50-75% Grass cover, Fair, HSG A
9,759		100.00% Pervious Area

Tc (min)	Length (feet)	Slope (ft/ft)	Velocity (ft/sec)	Capacity (cfs)	Description
6.0					**Direct Entry, Direct**

Summary for Subcatchment PR-H1: STA 55-->61

Runoff = 0.34 cfs @ 12.11 hrs, Volume= 0.031 af, Depth= 0.89"

Runoff by SCS TR-20 method, UH=SCS, Weighted-CN, Time Span= 0.00-48.00 hrs, dt= 0.01 hrs
Type III 24-hr 10-Year Rainfall=4.93"

Area (sf)	CN	Description
16,666	49	50-75% Grass cover, Fair, HSG A
1,798	96	Gravel surface, HSG A
18,464	54	Weighted Average
18,464		100.00% Pervious Area

Tc (min)	Length (feet)	Slope (ft/ft)	Velocity (ft/sec)	Capacity (cfs)	Description
6.0					**Direct Entry, Direct**

Summary for Subcatchment PR-H2: STA 62-->71

Runoff = 0.35 cfs @ 12.11 hrs, Volume= 0.034 af, Depth= 0.83"

Runoff by SCS TR-20 method, UH=SCS, Weighted-CN, Time Span= 0.00-48.00 hrs, dt= 0.01 hrs
Type III 24-hr 10-Year Rainfall=4.93"

Area (sf)	CN	Description
19,380	49	50-75% Grass cover, Fair, HSG A
1,943	98	Paved parking, HSG A
21,323	53	Weighted Average
19,380		90.89% Pervious Area
1,943		9.11% Impervious Area

Tc (min)	Length (feet)	Slope (ft/ft)	Velocity (ft/sec)	Capacity (cfs)	Description
6.0					**Direct Entry, Direct**

Summary for Subcatchment PR-I1: STA 64-->70

Runoff = 0.14 cfs @ 12.12 hrs, Volume= 0.016 af, Depth= 0.66"

Runoff by SCS TR-20 method, UH=SCS, Weighted-CN, Time Span= 0.00-48.00 hrs, dt= 0.01 hrs
Type III 24-hr 10-Year Rainfall=4.93"

Area (sf)	CN	Description
12,506	49	50-75% Grass cover, Fair, HSG A
191	98	Paved parking, HSG A
12,697	50	Weighted Average
12,506		98.50% Pervious Area
191		1.50% Impervious Area

Tc (min)	Length (feet)	Slope (ft/ft)	Velocity (ft/sec)	Capacity (cfs)	Description
6.0					**Direct Entry, Direct**

Summary for Pond 1P: STA 30

Inflow Area = 0.578 ac, 41.15% Impervious, Inflow Depth = 2.92" for 10-Year event
Inflow = 1.98 cfs @ 12.09 hrs, Volume= 0.141 af
Outflow = 0.32 cfs @ 12.58 hrs, Volume= 0.140 af, Atten= 84%, Lag= 29.4 min
Discarded = 0.03 cfs @ 12.58 hrs, Volume= 0.063 af
Primary = 0.29 cfs @ 12.58 hrs, Volume= 0.077 af
Secondary = 0.00 cfs @ 0.00 hrs, Volume= 0.000 af

Routing by Dyn-Stor-Ind method, Time Span= 0.00-48.00 hrs, dt= 0.01 hrs / 3
Peak Elev= 51.04' @ 12.58 hrs Surf.Area= 2,818 sf Storage= 2,853 cf

Plug-Flow detention time= 333.8 min calculated for 0.140 af (99% of inflow)
Center-of-Mass det. time= 328.8 min (1,148.5 - 819.7)

Volume	Invert	Avail.Storage	Storage Description
#1	49.50'	6,207 cf	**Custom Stage Data (Irregular)**Listed below (Recalc)

Elevation (feet)	Surf.Area (sq-ft)	Perim. (feet)	Inc.Store (cubic-feet)	Cum.Store (cubic-feet)	Wet.Area (sq-ft)
49.50	975	350.2	0	0	975
50.50	2,149	423.2	1,524	1,524	5,484
51.50	3,467	449.8	2,782	4,306	7,383
52.00	4,149	459.2	1,901	6,207	8,100

Device	Routing	Invert	Outlet Devices
#1	Primary	49.50'	**12.0" Round RCP_Round 12"** L= 295.0' RCP, rounded edge headwall, Ke= 0.100 Inlet / Outlet Invert= 49.50' / 46.55' S= 0.0100 '/' Cc= 0.900 n= 0.013 Concrete pipe, bends & connections, Flow Area= 0.79 sf
#2	Device 1	50.40'	**4.0" Vert. Orifice/Grate** C= 0.600
#3	Device 1	51.60'	**48.0" x 48.0" Horiz. Orifice/Grate** C= 0.600 Limited to weir flow at low heads
#4	Secondary	51.99'	**14.0' long x 90.0' breadth Broad-Crested Rectangular Weir** Head (feet) 0.20 0.40 0.60 0.80 1.00 1.20 1.40 1.60 Coef. (English) 2.68 2.70 2.70 2.64 2.63 2.64 2.64 2.63
#5	Discarded	49.50'	**0.230 in/hr Exfiltration over Wetted area**

Discarded OutFlow Max=0.03 cfs @ 12.58 hrs HW=51.04' (Free Discharge)
└**5=Exfiltration** (Exfiltration Controls 0.03 cfs)

Primary OutFlow Max=0.29 cfs @ 12.58 hrs HW=51.04' TW=0.00' (Dynamic Tailwater)
└**1=RCP_Round 12"** (Passes 0.29 cfs of 3.66 cfs potential flow)
  ├**2=Orifice/Grate** (Orifice Controls 0.29 cfs @ 3.30 fps)
  └**3=Orifice/Grate** (Controls 0.00 cfs)

Secondary OutFlow Max=0.00 cfs @ 0.00 hrs HW=49.50' TW=0.00' (Dynamic Tailwater)
└**4=Broad-Crested Rectangular Weir** (Controls 0.00 cfs)

Summary for Pond 2ESF: Southeast Sediment Forebay

Volume	Invert	Avail.Storage	Storage Description
#1	49.75'	76 cf	**Custom Stage Data (Irregular)** Listed below (Recalc)

Elevation (feet)	Surf.Area (sq-ft)	Perim. (feet)	Inc.Store (cubic-feet)	Cum.Store (cubic-feet)	Wet.Area (sq-ft)
49.75	35	21.3	0	0	35
50.75	127	40.2	76	76	132

Summary for Pond 2P: STA 37

Inflow Area = 2.156 ac, 22.76% Impervious, Inflow Depth = 2.56" for 10-Year event
Inflow = 6.48 cfs @ 12.09 hrs, Volume= 0.461 af
Outflow = 6.12 cfs @ 12.12 hrs, Volume= 0.461 af, Atten= 6%, Lag= 1.7 min
Discarded = 6.12 cfs @ 12.12 hrs, Volume= 0.461 af
Primary = 0.00 cfs @ 0.00 hrs, Volume= 0.000 af

Routing by Dyn-Stor-Ind method, Time Span= 0.00-48.00 hrs, dt= 0.01 hrs / 3

Peak Elev= 50.16' @ 12.12 hrs Surf.Area= 2,173 sf Storage= 684 cf

Plug-Flow detention time= (not calculated: outflow precedes inflow)
Center-of-Mass det. time= 1.0 min (831.4 - 830.4)

Volume	Invert	Avail.Storage	Storage Description
#1	49.75'	5,367 cf	**Custom Stage Data (Irregular)**Listed below (Recalc)

Elevation (feet)	Surf.Area (sq-ft)	Perim. (feet)	Inc.Store (cubic-feet)	Cum.Store (cubic-feet)	Wet.Area (sq-ft)
49.75	1,222	233.8	0	0	1,222
50.25	2,424	616.0	895	895	27,069
50.75	3,355	625.4	1,438	2,333	28,048
51.50	4,778	639.5	3,034	5,367	29,545

Device	Routing	Invert	Outlet Devices
#1	Discarded	49.75'	**12.850 in/hr Exfiltration over Wetted area**
#2	Primary	51.00'	**8.0' long x 55.0' breadth Broad-Crested Rectangular Weir**
			Head (feet) 0.20 0.40 0.60 0.80 1.00 1.20 1.40 1.60
			Coef. (English) 2.68 2.70 2.70 2.64 2.63 2.64 2.64 2.63

Discarded OutFlow Max=6.11 cfs @ 12.12 hrs HW=50.16' (Free Discharge)
↑—**1=Exfiltration** (Exfiltration Controls 6.11 cfs)

Primary OutFlow Max=0.00 cfs @ 0.00 hrs HW=49.75' TW=0.00' (Dynamic Tailwater)
↑—**2=Broad-Crested Rectangular Weir** (Controls 0.00 cfs)

Summary for Pond 2WSF: Northwest Sediment Forebay

Volume	Invert	Avail.Storage	Storage Description
#1	49.75'	180 cf	**Custom Stage Data (Irregular)**Listed below (Recalc)

Elevation (feet)	Surf.Area (sq-ft)	Perim. (feet)	Inc.Store (cubic-feet)	Cum.Store (cubic-feet)	Wet.Area (sq-ft)
49.75	108	42.0	0	0	108
50.75	263	60.9	180	180	271

Summary for Pond 3P: STA 52

Inflow Area = 2.649 ac, 35.37% Impervious, Inflow Depth = 0.39" for 10-Year event
Inflow = 1.07 cfs @ 12.10 hrs, Volume= 0.086 af
Outflow = 0.15 cfs @ 12.98 hrs, Volume= 0.086 af, Atten= 86%, Lag= 52.6 min
Discarded = 0.15 cfs @ 12.98 hrs, Volume= 0.086 af
Primary = 0.00 cfs @ 0.00 hrs, Volume= 0.000 af

Routing by Dyn-Stor-Ind method, Time Span= 0.00-48.00 hrs, dt= 0.01 hrs / 3
Peak Elev= 58.62' @ 12.98 hrs Surf.Area= 1,848 sf Storage= 1,261 cf

Plug-Flow detention time= 103.0 min calculated for 0.086 af (100% of inflow)
Center-of-Mass det. time= 103.0 min (979.5 - 876.5)

Volume	Invert	Avail.Storage	Storage Description
#1	57.50'	3,378 cf	**Custom Stage Data (Irregular)**Listed below (Recalc)

Elevation (feet)	Surf.Area (sq-ft)	Perim. (feet)	Inc.Store (cubic-feet)	Cum.Store (cubic-feet)	Wet.Area (sq-ft)
57.50	501	267.0	0	0	501
58.50	1,697	425.1	1,040	1,040	9,215
59.00	2,342	435.5	1,005	2,045	9,959
59.50	3,002	444.9	1,333	3,378	10,654

Device	Routing	Invert	Outlet Devices
#1	Discarded	57.50'	**0.700 in/hr Exfiltration over Wetted area**
#2	Primary	59.00'	**9.0' long x 100.0' breadth Broad-Crested Rectangular Weir**
			Head (feet) 0.20 0.40 0.60 0.80 1.00 1.20 1.40 1.60
			Coef. (English) 2.68 2.70 2.70 2.64 2.63 2.64 2.64 2.63

Discarded OutFlow Max=0.15 cfs @ 12.98 hrs HW=58.62' (Free Discharge)
↑—**1=Exfiltration** (Exfiltration Controls 0.15 cfs)

Primary OutFlow Max=0.00 cfs @ 0.00 hrs HW=57.50' TW=0.00' (Dynamic Tailwater)
↑—**2=Broad-Crested Rectangular Weir** (Controls 0.00 cfs)

Summary for Pond 4P: STA 30

Inflow Area = 1.834 ac, 41.17% Impervious, Inflow Depth = 0.27" for 10-Year event
Inflow = 0.55 cfs @ 12.09 hrs, Volume= 0.041 af
Outflow = 0.28 cfs @ 12.28 hrs, Volume= 0.041 af, Atten= 49%, Lag= 11.2 min
Discarded = 0.28 cfs @ 12.28 hrs, Volume= 0.041 af
Primary = 0.00 cfs @ 0.00 hrs, Volume= 0.000 af

Routing by Dyn-Stor-Ind method, Time Span= 0.00-48.00 hrs, dt= 0.01 hrs / 3
Peak Elev= 60.10' @ 12.28 hrs Surf.Area= 685 sf Storage= 287 cf

Plug-Flow detention time= (not calculated: outflow precedes inflow)
Center-of-Mass det. time= 11.3 min (867.7 - 856.3)

Volume	Invert	Avail.Storage	Storage Description
#1	59.50'	2,096 cf	**Custom Stage Data (Irregular)**Listed below (Recalc)

Elevation (feet)	Surf.Area (sq-ft)	Perim. (feet)	Inc.Store (cubic-feet)	Cum.Store (cubic-feet)	Wet.Area (sq-ft)
59.50	294	178.7	0	0	294
60.50	1,031	429.0	625	625	12,402
61.00	1,697	445.9	675	1,300	13,599
61.50	1,488	215.0	796	2,096	25,744

Device	Routing	Invert	Outlet Devices
#1	Discarded	59.50'	**1.900 in/hr Exfiltration over Wetted area**
#2	Primary	61.00'	**3.5' long x 50.0' breadth Broad-Crested Rectangular Weir**
			Head (feet) 0.20 0.40 0.60 0.80 1.00 1.20 1.40 1.60

Coef. (English) 2.68 2.70 2.70 2.64 2.63 2.64 2.64 2.63

Discarded OutFlow Max=0.28 cfs @ 12.28 hrs HW=60.10' (Free Discharge)
1=Exfiltration (Exfiltration Controls 0.28 cfs)

Primary OutFlow Max=0.00 cfs @ 0.00 hrs HW=59.50' TW=57.50' (Dynamic Tailwater)
2=Broad-Crested Rectangular Weir (Controls 0.00 cfs)

Summary for Pond 5P: STA 30

Inflow Area = 1.555 ac, 41.97% Impervious, Inflow Depth = 0.53" for 10-Year event
Inflow = 1.01 cfs @ 12.11 hrs, Volume= 0.068 af
Outflow = 0.27 cfs @ 12.55 hrs, Volume= 0.068 af, Atten= 73%, Lag= 26.3 min
Discarded = 0.27 cfs @ 12.55 hrs, Volume= 0.068 af
Primary = 0.00 cfs @ 0.00 hrs, Volume= 0.000 af

Routing by Dyn-Stor-Ind method, Time Span= 0.00-48.00 hrs, dt= 0.01 hrs / 3
Peak Elev= 62.87' @ 12.55 hrs Surf.Area= 1,617 sf Storage= 933 cf

Plug-Flow detention time= (not calculated: outflow precedes inflow)
Center-of-Mass det. time= 30.4 min (860.5 - 830.2)

Volume	Invert	Avail.Storage	Storage Description
#1	62.00'	2,220 cf	**Custom Stage Data (Irregular)** Listed below (Recalc)

Elevation (feet)	Surf.Area (sq-ft)	Perim. (feet)	Inc.Store (cubic-feet)	Cum.Store (cubic-feet)	Wet.Area (sq-ft)
62.00	566	373.9	0	0	566
62.50	1,169	410.0	425	425	2,826
63.00	1,798	429.2	736	1,161	4,126
63.50	2,456	448.0	1,059	2,220	5,456

Device	Routing	Invert	Outlet Devices
#1	Discarded	62.00'	**3.100 in/hr Exfiltration over Wetted area**
#2	Primary	63.00'	**5.0' long x 40.0' breadth Broad-Crested Rectangular Weir**
			Head (feet) 0.20 0.40 0.60 0.80 1.00 1.20 1.40 1.60
			Coef. (English) 2.68 2.70 2.70 2.64 2.63 2.64 2.64 2.63

Discarded OutFlow Max=0.27 cfs @ 12.55 hrs HW=62.87' (Free Discharge)
1=Exfiltration (Exfiltration Controls 0.27 cfs)

Primary OutFlow Max=0.00 cfs @ 0.00 hrs HW=62.00' TW=59.50' (Dynamic Tailwater)
2=Broad-Crested Rectangular Weir (Controls 0.00 cfs)

Summary for Pond 6P: STA 30

Inflow Area = 1.218 ac, 41.48% Impervious, Inflow Depth = 0.35" for 10-Year event
Inflow = 0.48 cfs @ 12.09 hrs, Volume= 0.036 af
Outflow = 0.36 cfs @ 12.17 hrs, Volume= 0.036 af, Atten= 26%, Lag= 4.6 min
Discarded = 0.04 cfs @ 12.17 hrs, Volume= 0.023 af
Primary = 0.31 cfs @ 12.17 hrs, Volume= 0.013 af
Secondary = 0.00 cfs @ 0.00 hrs, Volume= 0.000 af

Routing by Dyn-Stor-Ind method, Time Span= 0.00-48.00 hrs, dt= 0.01 hrs / 3
Peak Elev= 64.59' @ 12.17 hrs Surf.Area= 431 sf Storage= 253 cf

Plug-Flow detention time= 38.5 min calculated for 0.036 af (100% of inflow)
Center-of-Mass det. time= 38.5 min (894.8 - 856.3)

Volume	Invert	Avail.Storage	Storage Description
#1	63.50'	531 cf	**Custom Stage Data (Irregular)** Listed below (Recalc)

Elevation (feet)	Surf.Area (sq-ft)	Perim. (feet)	Inc.Store (cubic-feet)	Cum.Store (cubic-feet)	Wet.Area (sq-ft)
63.50	75	91.6	0	0	75
64.50	401	119.7	216	216	559
65.00	588	129.1	246	462	755
65.10	789	138.5	69	531	956

Device	Routing	Invert	Outlet Devices
#1	Primary	63.00'	**12.0" Round RCP_Round 12"** L= 94.0' RCP, square edge headwall, Ke= 0.500 Inlet / Outlet Invert= 63.00' / 62.50' S= 0.0053 '/' Cc= 0.900 n= 0.011 Concrete pipe, straight & clean, Flow Area= 0.79 sf
#2	Device 1	64.30'	**8.0" W x 3.0" H Vert. Orifice/Grate** C= 0.600
#3	Device 1	64.80'	**48.0" x 48.0" Horiz. Orifice/Grate** C= 0.600 Limited to weir flow at low heads
#4	Secondary	65.00'	**8.0' long x 20.0' breadth Broad-Crested Rectangular Weir** Head (feet) 0.20 0.40 0.60 0.80 1.00 1.20 1.40 1.60 Coef. (English) 2.68 2.70 2.70 2.64 2.63 2.64 2.64 2.63
#5	Discarded	63.50'	**3.100 in/hr Exfiltration over Wetted area**

Discarded OutFlow Max=0.04 cfs @ 12.17 hrs HW=64.59' (Free Discharge)
└**5=Exfiltration** (Exfiltration Controls 0.04 cfs)

Primary OutFlow Max=0.31 cfs @ 12.17 hrs HW=64.59' TW=62.60' (Dynamic Tailwater)
└**1=RCP_Round 12"** (Passes 0.31 cfs of 3.46 cfs potential flow)
  ├**2=Orifice/Grate** (Orifice Controls 0.31 cfs @ 1.88 fps)
  └**3=Orifice/Grate** (Controls 0.00 cfs)

Secondary OutFlow Max=0.00 cfs @ 0.00 hrs HW=63.50' TW=62.00' (Dynamic Tailwater)
└**4=Broad-Crested Rectangular Weir** (Controls 0.00 cfs)

Summary for Pond 7S: STA 64

Inflow Area = 0.974 ac, 42.52% Impervious, Inflow Depth = 1.46" for 10-Year event
Inflow = 1.63 cfs @ 12.09 hrs, Volume= 0.119 af
Outflow = 0.79 cfs @ 12.29 hrs, Volume= 0.119 af, Atten= 52%, Lag= 12.0 min
Discarded = 0.79 cfs @ 12.29 hrs, Volume= 0.119 af
Primary = 0.00 cfs @ 0.00 hrs, Volume= 0.000 af

Routing by Dyn-Stor-Ind method, Time Span= 0.00-48.00 hrs, dt= 0.01 hrs / 3
Peak Elev= 65.64' @ 12.29 hrs Surf.Area= 2,048 sf Storage= 1,148 cf

Plug-Flow detention time= (not calculated: outflow precedes inflow)
Center-of-Mass det. time= 41.4 min (892.5 - 851.0)

Volume	Invert	Avail.Storage	Storage Description
#1	65.00'	2,019 cf	**Custom Stage Data (Irregular)**Listed below (Recalc)

Elevation (feet)	Surf.Area (sq-ft)	Perim. (feet)	Inc.Store (cubic-feet)	Cum.Store (cubic-feet)	Wet.Area (sq-ft)
65.00	1,247	616.2	0	0	1,247
65.50	2,179	625.7	846	846	2,236
66.00	1,740	292.5	978	1,823	26,583
66.10	2,187	302.9	196	2,019	27,077

Device	Routing	Invert	Outlet Devices
#1	Primary	65.99'	**20.0' long x 12.0' breadth Broad-Crested Rectangular Weir** Head (feet) 0.20 0.40 0.60 0.80 1.00 1.20 1.40 1.60 Coef. (English) 2.57 2.62 2.70 2.67 2.66 2.67 2.66 2.64
#2	Discarded	65.00'	**3.100 in/hr Exfiltration over Wetted area**

Discarded OutFlow Max=0.79 cfs @ 12.29 hrs HW=65.64' (Free Discharge)
↑—**2=Exfiltration** (Exfiltration Controls 0.79 cfs)

Primary OutFlow Max=0.00 cfs @ 0.00 hrs HW=65.00' TW=63.50' (Dynamic Tailwater)
↑—**1=Broad-Crested Rectangular Weir** (Controls 0.00 cfs)

Summary for Pond 8P: STA 71

Inflow Area = 0.226 ac, 48.01% Impervious, Inflow Depth = 2.23" for 10-Year event
Inflow = 0.59 cfs @ 12.09 hrs, Volume= 0.042 af
Outflow = 0.14 cfs @ 12.52 hrs, Volume= 0.042 af, Atten= 77%, Lag= 25.7 min
Discarded = 0.14 cfs @ 12.52 hrs, Volume= 0.042 af
Primary = 0.00 cfs @ 0.00 hrs, Volume= 0.000 af

Routing by Dyn-Stor-Ind method, Time Span= 0.00-48.00 hrs, dt= 0.01 hrs / 3
Peak Elev= 73.68' @ 12.52 hrs Surf.Area= 1,021 sf Storage= 553 cf

Plug-Flow detention time= (not calculated: outflow precedes inflow)
Center-of-Mass det. time= 40.2 min (880.9 - 840.7)

Volume	Invert	Avail.Storage	Storage Description
#1	72.75'	1,105 cf	**Custom Stage Data (Irregular)** Listed below (Recalc)

Elevation (feet)	Surf.Area (sq-ft)	Perim. (feet)	Inc.Store (cubic-feet)	Cum.Store (cubic-feet)	Wet.Area (sq-ft)
72.75	216	156.5	0	0	216
73.50	873	284.9	381	381	4,729
74.00	1,307	294.3	541	922	5,186
74.12	1,756	303.8	183	1,105	5,640

Device	Routing	Invert	Outlet Devices
#1	Discarded	72.75'	**1.200 in/hr Exfiltration over Wetted area**
#2	Primary	74.00'	**40.0' long x 8.5' breadth Broad-Crested Rectangular Weir** Head (feet) 0.20 0.40 0.60 0.80 1.00 1.20 1.40 1.60 1.80 2.00 2.50 3.00 3.50 4.00 4.50 5.00 5.50 Coef. (English) 2.45 2.54 2.70 2.69 2.68 2.68 2.66 2.64 2.64 2.64 2.65 2.65 2.65 2.66 2.67 2.69 2.71

Discarded OutFlow Max=0.14 cfs @ 12.52 hrs HW=73.68' (Free Discharge)
↑—**1=Exfiltration** (Exfiltration Controls 0.14 cfs)

Primary OutFlow Max=0.00 cfs @ 0.00 hrs HW=72.75' TW=65.00' (Dynamic Tailwater)
↑—**2=Broad-Crested Rectangular Weir** (Controls 0.00 cfs)

Summary for Link DP-A: RIVER

Inflow Area = 1.313 ac, 57.21% Impervious, Inflow Depth = 3.40" for 10-Year event
Inflow = 5.17 cfs @ 12.09 hrs, Volume= 0.372 af
Primary = 5.17 cfs @ 12.09 hrs, Volume= 0.372 af, Atten= 0%, Lag= 0.0 min

Primary outflow = Inflow, Time Span= 0.00-48.00 hrs, dt= 0.01 hrs

Summary for Link DP-B: Broadway CB/Canal

Inflow Area = 1.745 ac, 54.65% Impervious, Inflow Depth = 2.91" for 10-Year event
Inflow = 4.62 cfs @ 12.09 hrs, Volume= 0.423 af
Primary = 4.62 cfs @ 12.09 hrs, Volume= 0.423 af, Atten= 0%, Lag= 0.0 min

Primary outflow = Inflow, Time Span= 0.00-48.00 hrs, dt= 0.01 hrs

Summary for Link DP-C: Essex CB

Inflow Area = 0.470 ac, 88.74% Impervious, Inflow Depth = 4.35" for 10-Year event
Inflow = 2.20 cfs @ 12.08 hrs, Volume= 0.170 af
Primary = 2.20 cfs @ 12.08 hrs, Volume= 0.170 af, Atten= 0%, Lag= 0.0 min

Primary outflow = Inflow, Time Span= 0.00-48.00 hrs, dt= 0.01 hrs

Summary for Link DP-D: Wetland (NE)

Inflow Area = 2.156 ac, 22.76% Impervious, Inflow Depth = 0.00" for 10-Year event
Inflow = 0.00 cfs @ 0.00 hrs, Volume= 0.000 af
Primary = 0.00 cfs @ 0.00 hrs, Volume= 0.000 af, Atten= 0%, Lag= 0.0 min

Primary outflow = Inflow, Time Span= 0.00-48.00 hrs, dt= 0.01 hrs

Summary for Link DP-E: Wetland (SW)

Inflow Area = 0.774 ac, 1.60% Impervious, Inflow Depth = 1.91" for 10-Year event
Inflow = 1.69 cfs @ 12.09 hrs, Volume= 0.123 af
Primary = 1.69 cfs @ 12.09 hrs, Volume= 0.123 af, Atten= 0%, Lag= 0.0 min

Primary outflow = Inflow, Time Span= 0.00-48.00 hrs, dt= 0.01 hrs

Summary for Link DP-F: Haverhill

Inflow Area = 3.003 ac, 38.44% Impervious, Inflow Depth = 0.32" for 10-Year event
Inflow = 1.14 cfs @ 12.09 hrs, Volume= 0.081 af
Primary = 1.14 cfs @ 12.09 hrs, Volume= 0.081 af, Atten= 0%, Lag= 0.0 min

Primary outflow = Inflow, Time Span= 0.00-48.00 hrs, dt= 0.01 hrs

Summary for Link DP-G: Railroad Street

Inflow Area = 0.224 ac, 0.00% Impervious, Inflow Depth = 0.61" for 10-Year event
Inflow = 0.09 cfs @ 12.13 hrs, Volume= 0.011 af
Primary = 0.09 cfs @ 12.13 hrs, Volume= 0.011 af, Atten= 0%, Lag= 0.0 min

Primary outflow = Inflow, Time Span= 0.00-48.00 hrs, dt= 0.01 hrs

Summary for Link DP-H: Bourgoin Park

Inflow Area = 0.913 ac, 4.88% Impervious, Inflow Depth = 0.86" for 10-Year event
Inflow = 0.68 cfs @ 12.11 hrs, Volume= 0.065 af
Primary = 0.68 cfs @ 12.11 hrs, Volume= 0.065 af, Atten= 0%, Lag= 0.0 min

Primary outflow = Inflow, Time Span= 0.00-48.00 hrs, dt= 0.01 hrs

Summary for Link DP-I: 127 May St

Inflow Area = 0.291 ac, 1.50% Impervious, Inflow Depth = 0.66" for 10-Year event
Inflow = 0.14 cfs @ 12.12 hrs, Volume= 0.016 af
Primary = 0.14 cfs @ 12.12 hrs, Volume= 0.016 af, Atten= 0%, Lag= 0.0 min

Primary outflow = Inflow, Time Span= 0.00-48.00 hrs, dt= 0.01 hrs

Summary for Subcatchment PR-A1: STA 1-->14

Runoff = 6.72 cfs @ 12.09 hrs, Volume= 0.490 af, Depth= 4.48"

Runoff by SCS TR-20 method, UH=SCS, Weighted-CN, Time Span= 0.00-48.00 hrs, dt= 0.01 hrs
Type III 24-hr 25-Year Rainfall=6.07"

Area (sf)	CN	Description
24,468	69	50-75% Grass cover, Fair, HSG B
32,708	98	Paved parking, HSG B
57,176	86	Weighted Average
24,468		42.79% Pervious Area
32,708		57.21% Impervious Area

Tc (min)	Length (feet)	Slope (ft/ft)	Velocity (ft/sec)	Capacity (cfs)	Description
6.0					**Direct Entry, Direct**

Summary for Subcatchment PR-B1: STA 12-->25

Runoff = 2.91 cfs @ 12.08 hrs, Volume= 0.238 af, Depth= 5.83"

Runoff by SCS TR-20 method, UH=SCS, Weighted-CN, Time Span= 0.00-48.00 hrs, dt= 0.01 hrs
Type III 24-hr 25-Year Rainfall=6.07"

Area (sf)	CN	Description
204	49	50-75% Grass cover, Fair, HSG A
21,088	98	Paved parking, HSG A
21,292	98	Weighted Average
204		0.96% Pervious Area
21,088		99.04% Impervious Area

Tc (min)	Length (feet)	Slope (ft/ft)	Velocity (ft/sec)	Capacity (cfs)	Description
6.0					**Direct Entry, Direct**

Summary for Subcatchment PR-B2: STA 25-->32

Runoff = 2.66 cfs @ 12.09 hrs, Volume= 0.190 af, Depth= 3.95"

Runoff by SCS TR-20 method, UH=SCS, Weighted-CN, Time Span= 0.00-48.00 hrs, dt= 0.01 hrs
Type III 24-hr 25-Year Rainfall=6.07"

Area (sf)	CN	Description
14,824	69	50-75% Grass cover, Fair, HSG B
10,366	98	Paved parking, HSG B
25,190	81	Weighted Average
14,824		58.85% Pervious Area
10,366		41.15% Impervious Area

Tc (min)	Length (feet)	Slope (ft/ft)	Velocity (ft/sec)	Capacity (cfs)	Description
6.0					**Direct Entry, Direct**

Summary for Subcatchment PR-B3: STA 25 -->32

Runoff = 2.97 cfs @ 12.09 hrs, Volume= 0.211 af, Depth= 3.74"

Runoff by SCS TR-20 method, UH=SCS, Weighted-CN, Time Span= 0.00-48.00 hrs, dt= 0.01 hrs
Type III 24-hr 25-Year Rainfall=6.07"

Area (sf)	CN	Description
19,443	69	50-75% Grass cover, Fair, HSG B
10,082	98	Paved parking, HSG B
29,525	79	Weighted Average
19,443		65.85% Pervious Area
10,082		34.15% Impervious Area

Tc (min)	Length (feet)	Slope (ft/ft)	Velocity (ft/sec)	Capacity (cfs)	Description
6.0					**Direct Entry, Direct**

Summary for Subcatchment PR-C1: Essex

Runoff = 2.74 cfs @ 12.08 hrs, Volume= 0.215 af, Depth= 5.48"

Runoff by SCS TR-20 method, UH=SCS, Weighted-CN, Time Span= 0.00-48.00 hrs, dt= 0.01 hrs
Type III 24-hr 25-Year Rainfall=6.07"

Area (sf)	CN	Description
2,306	69	50-75% Grass cover, Fair, HSG B
18,181	98	Paved parking, HSG B
20,487	95	Weighted Average
2,306		11.26% Pervious Area
18,181		88.74% Impervious Area

Tc (min)	Length (feet)	Slope (ft/ft)	Velocity (ft/sec)	Capacity (cfs)	Description
6.0					**Direct Entry, Direct**

Summary for Subcatchment PR-D1: STA 34-->49

Runoff = 8.95 cfs @ 12.09 hrs, Volume= 0.636 af, Depth= 3.54"

Runoff by SCS TR-20 method, UH=SCS, Weighted-CN, Time Span= 0.00-48.00 hrs, dt= 0.01 hrs
Type III 24-hr 25-Year Rainfall=6.07"

Area (sf)	CN	Description
67,573	69	50-75% Grass cover, Fair, HSG B
21,377	98	Paved parking, HSG B
4,958	96	Gravel surface, HSG B
93,908	77	Weighted Average
72,531		77.24% Pervious Area
21,377		22.76% Impervious Area

Tc (min)	Length (feet)	Slope (ft/ft)	Velocity (ft/sec)	Capacity (cfs)	Description
6.0					**Direct Entry, Direct**

Summary for Subcatchment PR-E1: STA 39-->48

Runoff = 2.50 cfs @ 12.09 hrs, Volume= 0.179 af, Depth= 2.77"

Runoff by SCS TR-20 method, UH=SCS, Weighted-CN, Time Span= 0.00-48.00 hrs, dt= 0.01 hrs
Type III 24-hr 25-Year Rainfall=6.07"

Area (sf)	CN	Description
33,189	69	50-75% Grass cover, Fair, HSG B
541	98	Paved parking, HSG B
33,730	69	Weighted Average
33,189		98.40% Pervious Area
541		1.60% Impervious Area

Tc (min)	Length (feet)	Slope (ft/ft)	Velocity (ft/sec)	Capacity (cfs)	Description
6.0					**Direct Entry, Direct**

Summary for Subcatchment PR-F1: STA 49-->51

Runoff = 1.55 cfs @ 12.09 hrs, Volume= 0.110 af, Depth= 3.74"

Runoff by SCS TR-20 method, UH=SCS, Weighted-CN, Time Span= 0.00-48.00 hrs, dt= 0.01 hrs
Type III 24-hr 25-Year Rainfall=6.07"

Area (sf)	CN	Description
5,957	49	50-75% Grass cover, Fair, HSG A
9,477	98	Paved parking, HSG A
15,434	79	Weighted Average
5,957		38.60% Pervious Area
9,477		61.40% Impervious Area

Tc (min)	Length (feet)	Slope (ft/ft)	Velocity (ft/sec)	Capacity (cfs)	Description
6.0					**Direct Entry, Direct**

Summary for Subcatchment PR-F2: STA 51->55

Runoff = 1.78 cfs @ 12.10 hrs, Volume= 0.134 af, Depth= 1.97"

Runoff by SCS TR-20 method, UH=SCS, Weighted-CN, Time Span= 0.00-48.00 hrs, dt= 0.01 hrs
Type III 24-hr 25-Year Rainfall=6.07"

Area (sf)	CN	Description
27,588	49	50-75% Grass cover, Fair, HSG A
7,921	98	Paved parking, HSG A
35,509	60	Weighted Average
27,588		77.69% Pervious Area
7,921		22.31% Impervious Area

Tc (min)	Length (feet)	Slope (ft/ft)	Velocity (ft/sec)	Capacity (cfs)	Description
6.0					**Direct Entry, Direct**

Summary for Subcatchment PR-F3: STA 55-->58

Runoff = 0.83 cfs @ 12.09 hrs, Volume= 0.060 af, Depth= 2.58"

Runoff by SCS TR-20 method, UH=SCS, Weighted-CN, Time Span= 0.00-48.00 hrs, dt= 0.01 hrs
Type III 24-hr 25-Year Rainfall=6.07"

Area (sf)	CN	Description
7,695	49	50-75% Grass cover, Fair, HSG A
4,464	98	Paved parking, HSG A
12,159	67	Weighted Average
7,695		63.29% Pervious Area
4,464		36.71% Impervious Area

Tc (min)	Length (feet)	Slope (ft/ft)	Velocity (ft/sec)	Capacity (cfs)	Description
6.0					**Direct Entry, Direct**

Summary for Subcatchment PR-F4: STA 58-->62

Runoff = 1.12 cfs @ 12.09 hrs, Volume= 0.080 af, Depth= 2.86"

Runoff by SCS TR-20 method, UH=SCS, Weighted-CN, Time Span= 0.00-48.00 hrs, dt= 0.01 hrs
Type III 24-hr 25-Year Rainfall=6.07"

Area (sf)	CN	Description
8,240	49	50-75% Grass cover, Fair, HSG A
6,412	98	Paved parking, HSG A
14,652	70	Weighted Average
8,240		56.24% Pervious Area
6,412		43.76% Impervious Area

Tc (min)	Length (feet)	Slope (ft/ft)	Velocity (ft/sec)	Capacity (cfs)	Description
6.0					**Direct Entry, Direct**

Summary for Subcatchment PR-F5: STA 62-->67

Runoff = 0.73 cfs @ 12.09 hrs, Volume= 0.053 af, Depth= 2.58"

Runoff by SCS TR-20 method, UH=SCS, Weighted-CN, Time Span= 0.00-48.00 hrs, dt= 0.01 hrs
Type III 24-hr 25-Year Rainfall=6.07"

Area (sf)	CN	Description
6,667	49	50-75% Grass cover, Fair, HSG A
3,972	98	Paved parking, HSG A
10,639	67	Weighted Average
6,667		62.67% Pervious Area
3,972		37.33% Impervious Area

Tc (min)	Length (feet)	Slope (ft/ft)	Velocity (ft/sec)	Capacity (cfs)	Description
6.0					**Direct Entry, Direct**

Summary for Subcatchment PR-F6: STA63-->67

Runoff = 2.41 cfs @ 12.09 hrs, Volume= 0.172 af, Depth= 2.77"

Runoff by SCS TR-20 method, UH=SCS, Weighted-CN, Time Span= 0.00-48.00 hrs, dt= 0.01 hrs
Type III 24-hr 25-Year Rainfall=6.07"

Area (sf)	CN	Description
19,270	49	50-75% Grass cover, Fair, HSG A
13,311	98	Paved parking, HSG A
32,581	69	Weighted Average
19,270		59.14% Pervious Area
13,311		40.86% Impervious Area

Tc (min)	Length (feet)	Slope (ft/ft)	Velocity (ft/sec)	Capacity (cfs)	Description
6.0					**Direct Entry, Direct**

Summary for Subcatchment PR-F7: STA 70-->74

Runoff = 0.83 cfs @ 12.09 hrs, Volume= 0.059 af, Depth= 3.15"

Runoff by SCS TR-20 method, UH=SCS, Weighted-CN, Time Span= 0.00-48.00 hrs, dt= 0.01 hrs
Type III 24-hr 25-Year Rainfall=6.07"

Area (sf)	CN	Description
5,119	49	50-75% Grass cover, Fair, HSG A
4,727	98	Paved parking, HSG A
9,846	73	Weighted Average
5,119		51.99% Pervious Area
4,727		48.01% Impervious Area

Tc (min)	Length (feet)	Slope (ft/ft)	Velocity (ft/sec)	Capacity (cfs)	Description
6.0					**Direct Entry, Direct**

Summary for Subcatchment PR-G1: STA 57-->62

Runoff = 0.22 cfs @ 12.11 hrs, Volume= 0.021 af, Depth= 1.10"

Runoff by SCS TR-20 method, UH=SCS, Weighted-CN, Time Span= 0.00-48.00 hrs, dt= 0.01 hrs
Type III 24-hr 25-Year Rainfall=6.07"

Area (sf)	CN	Description
9,759	49	50-75% Grass cover, Fair, HSG A
9,759		100.00% Pervious Area

Tc (min)	Length (feet)	Slope (ft/ft)	Velocity (ft/sec)	Capacity (cfs)	Description
6.0					**Direct Entry, Direct**

Summary for Subcatchment PR-H1: STA 55-->61

Runoff = 0.65 cfs @ 12.10 hrs, Volume= 0.052 af, Depth= 1.48"

Runoff by SCS TR-20 method, UH=SCS, Weighted-CN, Time Span= 0.00-48.00 hrs, dt= 0.01 hrs
Type III 24-hr 25-Year Rainfall=6.07"

Area (sf)	CN	Description
16,666	49	50-75% Grass cover, Fair, HSG A
1,798	96	Gravel surface, HSG A
18,464	54	Weighted Average
18,464		100.00% Pervious Area

Tc (min)	Length (feet)	Slope (ft/ft)	Velocity (ft/sec)	Capacity (cfs)	Description
6.0					**Direct Entry, Direct**

Summary for Subcatchment PR-H2: STA 62-->71

Runoff = 0.69 cfs @ 12.10 hrs, Volume= 0.057 af, Depth= 1.40"

Runoff by SCS TR-20 method, UH=SCS, Weighted-CN, Time Span= 0.00-48.00 hrs, dt= 0.01 hrs
Type III 24-hr 25-Year Rainfall=6.07"

Area (sf)	CN	Description
19,380	49	50-75% Grass cover, Fair, HSG A
1,943	98	Paved parking, HSG A
21,323	53	Weighted Average
19,380		90.89% Pervious Area
1,943		9.11% Impervious Area

Tc (min)	Length (feet)	Slope (ft/ft)	Velocity (ft/sec)	Capacity (cfs)	Description
6.0					**Direct Entry, Direct**

Summary for Subcatchment PR-I1: STA 64-->70

Runoff = 0.32 cfs @ 12.11 hrs, Volume= 0.029 af, Depth= 1.18"

Runoff by SCS TR-20 method, UH=SCS, Weighted-CN, Time Span= 0.00-48.00 hrs, dt= 0.01 hrs
Type III 24-hr 25-Year Rainfall=6.07"

Area (sf)	CN	Description
12,506	49	50-75% Grass cover, Fair, HSG A
191	98	Paved parking, HSG A
12,697	50	Weighted Average
12,506		98.50% Pervious Area
191		1.50% Impervious Area

Tc (min)	Length (feet)	Slope (ft/ft)	Velocity (ft/sec)	Capacity (cfs)	Description
6.0					**Direct Entry, Direct**

Summary for Pond 1P: STA 30

Inflow Area = 0.578 ac, 41.15% Impervious, Inflow Depth = 3.95" for 25-Year event
Inflow = 2.66 cfs @ 12.09 hrs, Volume= 0.190 af
Outflow = 0.42 cfs @ 12.58 hrs, Volume= 0.189 af, Atten= 84%, Lag= 29.5 min
Discarded = 0.04 cfs @ 12.58 hrs, Volume= 0.066 af
Primary = 0.38 cfs @ 12.58 hrs, Volume= 0.122 af
Secondary = 0.00 cfs @ 0.00 hrs, Volume= 0.000 af

Routing by Dyn-Stor-Ind method, Time Span= 0.00-48.00 hrs, dt= 0.01 hrs / 3
Peak Elev= 51.39' @ 12.58 hrs Surf.Area= 3,303 sf Storage= 3,925 cf

Plug-Flow detention time= (not calculated: outflow precedes inflow)
Center-of-Mass det. time= 276.5 min (1,087.6 - 811.1)

Volume	Invert	Avail.Storage	Storage Description
#1	49.50'	6,207 cf	**Custom Stage Data (Irregular)**Listed below (Recalc)

Elevation (feet)	Surf.Area (sq-ft)	Perim. (feet)	Inc.Store (cubic-feet)	Cum.Store (cubic-feet)	Wet.Area (sq-ft)
49.50	975	350.2	0	0	975
50.50	2,149	423.2	1,524	1,524	5,484
51.50	3,467	449.8	2,782	4,306	7,383
52.00	4,149	459.2	1,901	6,207	8,100

Device	Routing	Invert	Outlet Devices
#1	Primary	49.50'	**12.0" Round RCP_Round 12"** L= 295.0' RCP, rounded edge headwall, Ke= 0.100 Inlet / Outlet Invert= 49.50' / 46.55' S= 0.0100 '/' Cc= 0.900 n= 0.013 Concrete pipe, bends & connections, Flow Area= 0.79 sf
#2	Device 1	50.40'	**4.0" Vert. Orifice/Grate** C= 0.600
#3	Device 1	51.60'	**48.0" x 48.0" Horiz. Orifice/Grate** C= 0.600 Limited to weir flow at low heads
#4	Secondary	51.99'	**14.0' long x 90.0' breadth Broad-Crested Rectangular Weir** Head (feet) 0.20 0.40 0.60 0.80 1.00 1.20 1.40 1.60 Coef. (English) 2.68 2.70 2.70 2.64 2.63 2.64 2.64 2.63
#5	Discarded	49.50'	**0.230 in/hr Exfiltration over Wetted area**

Discarded OutFlow Max=0.04 cfs @ 12.58 hrs HW=51.39' (Free Discharge)
└**5=Exfiltration** (Exfiltration Controls 0.04 cfs)

Primary OutFlow Max=0.38 cfs @ 12.58 hrs HW=51.39' TW=0.00' (Dynamic Tailwater)
└**1=RCP_Round 12"** (Passes 0.38 cfs of 3.84 cfs potential flow)
  ├**2=Orifice/Grate** (Orifice Controls 0.38 cfs @ 4.36 fps)
  └**3=Orifice/Grate** (Controls 0.00 cfs)

Secondary OutFlow Max=0.00 cfs @ 0.00 hrs HW=49.50' TW=0.00' (Dynamic Tailwater)
└**4=Broad-Crested Rectangular Weir** (Controls 0.00 cfs)

Summary for Pond 2ESF: Southeast Sediment Forebay

Volume	Invert	Avail.Storage	Storage Description
#1	49.75'	76 cf	**Custom Stage Data (Irregular)** Listed below (Recalc)

Elevation (feet)	Surf.Area (sq-ft)	Perim. (feet)	Inc.Store (cubic-feet)	Cum.Store (cubic-feet)	Wet.Area (sq-ft)
49.75	35	21.3	0	0	35
50.75	127	40.2	76	76	132

Summary for Pond 2P: STA 37

Inflow Area = 2.156 ac, 22.76% Impervious, Inflow Depth = 3.54" for 25-Year event
Inflow = 8.95 cfs @ 12.09 hrs, Volume= 0.636 af
Outflow = 8.07 cfs @ 12.13 hrs, Volume= 0.636 af, Atten= 10%, Lag= 2.3 min
Discarded = 8.07 cfs @ 12.13 hrs, Volume= 0.636 af
Primary = 0.00 cfs @ 0.00 hrs, Volume= 0.000 af

Routing by Dyn-Stor-Ind method, Time Span= 0.00-48.00 hrs, dt= 0.01 hrs / 3

Peak Elev= 50.28' @ 12.13 hrs Surf.Area= 2,480 sf Storage= 974 cf

Plug-Flow detention time= (not calculated: outflow precedes inflow)
Center-of-Mass det. time= 1.1 min (822.2 - 821.1)

Volume	Invert	Avail.Storage	Storage Description
#1	49.75'	5,367 cf	**Custom Stage Data (Irregular)**Listed below (Recalc)

Elevation (feet)	Surf.Area (sq-ft)	Perim. (feet)	Inc.Store (cubic-feet)	Cum.Store (cubic-feet)	Wet.Area (sq-ft)
49.75	1,222	233.8	0	0	1,222
50.25	2,424	616.0	895	895	27,069
50.75	3,355	625.4	1,438	2,333	28,048
51.50	4,778	639.5	3,034	5,367	29,545

Device	Routing	Invert	Outlet Devices
#1	Discarded	49.75'	**12.850 in/hr Exfiltration over Wetted area**
#2	Primary	51.00'	**8.0' long x 55.0' breadth Broad-Crested Rectangular Weir**
			Head (feet) 0.20 0.40 0.60 0.80 1.00 1.20 1.40 1.60
			Coef. (English) 2.68 2.70 2.70 2.64 2.63 2.64 2.64 2.63

Discarded OutFlow Max=8.07 cfs @ 12.13 hrs HW=50.28' (Free Discharge)
↑**1=Exfiltration** (Exfiltration Controls 8.07 cfs)

Primary OutFlow Max=0.00 cfs @ 0.00 hrs HW=49.75' TW=0.00' (Dynamic Tailwater)
↑**2=Broad-Crested Rectangular Weir** (Controls 0.00 cfs)

Summary for Pond 2WSF: Northwest Sediment Forebay

Volume	Invert	Avail.Storage	Storage Description
#1	49.75'	180 cf	**Custom Stage Data (Irregular)**Listed below (Recalc)

Elevation (feet)	Surf.Area (sq-ft)	Perim. (feet)	Inc.Store (cubic-feet)	Cum.Store (cubic-feet)	Wet.Area (sq-ft)
49.75	108	42.0	0	0	108
50.75	263	60.9	180	180	271

Summary for Pond 3P: STA 52

Inflow Area = 2.649 ac, 35.37% Impervious, Inflow Depth = 0.61" for 25-Year event
Inflow = 1.78 cfs @ 12.10 hrs, Volume= 0.134 af
Outflow = 0.37 cfs @ 12.57 hrs, Volume= 0.134 af, Atten= 79%, Lag= 28.6 min
Discarded = 0.16 cfs @ 12.57 hrs, Volume= 0.125 af
Primary = 0.20 cfs @ 12.57 hrs, Volume= 0.009 af

Routing by Dyn-Stor-Ind method, Time Span= 0.00-48.00 hrs, dt= 0.01 hrs / 3
Peak Elev= 59.04' @ 12.57 hrs Surf.Area= 2,394 sf Storage= 2,144 cf

Plug-Flow detention time= 140.3 min calculated for 0.134 af (100% of inflow)
Center-of-Mass det. time= 140.3 min (1,002.4 - 862.1)

Volume	Invert	Avail.Storage	Storage Description
#1	57.50'	3,378 cf	**Custom Stage Data (Irregular)**Listed below (Recalc)

Elevation (feet)	Surf.Area (sq-ft)	Perim. (feet)	Inc.Store (cubic-feet)	Cum.Store (cubic-feet)	Wet.Area (sq-ft)
57.50	501	267.0	0	0	501
58.50	1,697	425.1	1,040	1,040	9,215
59.00	2,342	435.5	1,005	2,045	9,959
59.50	3,002	444.9	1,333	3,378	10,654

Device	Routing	Invert	Outlet Devices
#1	Discarded	57.50'	**0.700 in/hr Exfiltration over Wetted area**
#2	Primary	59.00'	**9.0' long x 100.0' breadth Broad-Crested Rectangular Weir**
			Head (feet) 0.20 0.40 0.60 0.80 1.00 1.20 1.40 1.60
			Coef. (English) 2.68 2.70 2.70 2.64 2.63 2.64 2.64 2.63

Discarded OutFlow Max=0.16 cfs @ 12.57 hrs HW=59.04' (Free Discharge)
↑—**1=Exfiltration** (Exfiltration Controls 0.16 cfs)

Primary OutFlow Max=0.20 cfs @ 12.57 hrs HW=59.04' TW=0.00' (Dynamic Tailwater)
↑—**2=Broad-Crested Rectangular Weir** (Weir Controls 0.20 cfs @ 0.55 fps)

Summary for Pond 4P: STA 30

Inflow Area = 1.834 ac, 41.17% Impervious, Inflow Depth = 0.46" for 25-Year event
Inflow = 0.83 cfs @ 12.09 hrs, Volume= 0.071 af
Outflow = 0.54 cfs @ 12.50 hrs, Volume= 0.071 af, Atten= 35%, Lag= 24.5 min
Discarded = 0.54 cfs @ 12.50 hrs, Volume= 0.071 af
Primary = 0.00 cfs @ 0.00 hrs, Volume= 0.000 af

Routing by Dyn-Stor-Ind method, Time Span= 0.00-48.00 hrs, dt= 0.01 hrs / 3
Peak Elev= 60.50' @ 12.50 hrs Surf.Area= 1,029 sf Storage= 623 cf

Plug-Flow detention time= (not calculated: outflow precedes inflow)
Center-of-Mass det. time= 14.1 min (844.1 - 830.0)

Volume	Invert	Avail.Storage	Storage Description
#1	59.50'	2,096 cf	**Custom Stage Data (Irregular)**Listed below (Recalc)

Elevation (feet)	Surf.Area (sq-ft)	Perim. (feet)	Inc.Store (cubic-feet)	Cum.Store (cubic-feet)	Wet.Area (sq-ft)
59.50	294	178.7	0	0	294
60.50	1,031	429.0	625	625	12,402
61.00	1,697	445.9	675	1,300	13,599
61.50	1,488	215.0	796	2,096	25,744

Device	Routing	Invert	Outlet Devices
#1	Discarded	59.50'	**1.900 in/hr Exfiltration over Wetted area**
#2	Primary	61.00'	**3.5' long x 50.0' breadth Broad-Crested Rectangular Weir**
			Head (feet) 0.20 0.40 0.60 0.80 1.00 1.20 1.40 1.60

Coef. (English) 2.68 2.70 2.70 2.64 2.63 2.64 2.64 2.63

Discarded OutFlow Max=0.54 cfs @ 12.50 hrs HW=60.50' (Free Discharge)
1=Exfiltration (Exfiltration Controls 0.54 cfs)

Primary OutFlow Max=0.00 cfs @ 0.00 hrs HW=59.50' TW=57.50' (Dynamic Tailwater)
2=Broad-Crested Rectangular Weir (Controls 0.00 cfs)

Summary for Pond 5P: STA 30

Inflow Area = 1.555 ac, 41.97% Impervious, Inflow Depth = 0.81" for 25-Year event
Inflow = 1.54 cfs @ 12.10 hrs, Volume= 0.105 af
Outflow = 0.75 cfs @ 12.39 hrs, Volume= 0.105 af, Atten= 51%, Lag= 17.5 min
Discarded = 0.32 cfs @ 12.39 hrs, Volume= 0.094 af
Primary = 0.43 cfs @ 12.39 hrs, Volume= 0.011 af

Routing by Dyn-Stor-Ind method, Time Span= 0.00-48.00 hrs, dt= 0.01 hrs / 3
Peak Elev= 63.10' @ 12.39 hrs Surf.Area= 1,923 sf Storage= 1,349 cf

Plug-Flow detention time= (not calculated: outflow precedes inflow)
Center-of-Mass det. time= 34.3 min (852.6 - 818.4)

Volume	Invert	Avail.Storage	Storage Description
#1	62.00'	2,220 cf	**Custom Stage Data (Irregular)** Listed below (Recalc)

Elevation (feet)	Surf.Area (sq-ft)	Perim. (feet)	Inc.Store (cubic-feet)	Cum.Store (cubic-feet)	Wet.Area (sq-ft)
62.00	566	373.9	0	0	566
62.50	1,169	410.0	425	425	2,826
63.00	1,798	429.2	736	1,161	4,126
63.50	2,456	448.0	1,059	2,220	5,456

Device	Routing	Invert	Outlet Devices
#1	Discarded	62.00'	**3.100 in/hr Exfiltration over Wetted area**
#2	Primary	63.00'	**5.0' long x 40.0' breadth Broad-Crested Rectangular Weir**
			Head (feet) 0.20 0.40 0.60 0.80 1.00 1.20 1.40 1.60
			Coef. (English) 2.68 2.70 2.70 2.64 2.63 2.64 2.64 2.63

Discarded OutFlow Max=0.32 cfs @ 12.39 hrs HW=63.10' (Free Discharge)
1=Exfiltration (Exfiltration Controls 0.32 cfs)

Primary OutFlow Max=0.43 cfs @ 12.39 hrs HW=63.10' TW=60.45' (Dynamic Tailwater)
2=Broad-Crested Rectangular Weir (Weir Controls 0.43 cfs @ 0.85 fps)

Summary for Pond 6P: STA 30

Inflow Area = 1.218 ac, 41.48% Impervious, Inflow Depth = 0.52" for 25-Year event
Inflow = 0.73 cfs @ 12.09 hrs, Volume= 0.053 af
Outflow = 0.52 cfs @ 12.17 hrs, Volume= 0.053 af, Atten= 29%, Lag= 4.9 min
Discarded = 0.05 cfs @ 12.17 hrs, Volume= 0.028 af
Primary = 0.47 cfs @ 12.17 hrs, Volume= 0.025 af
Secondary = 0.00 cfs @ 0.00 hrs, Volume= 0.000 af

Routing by Dyn-Stor-Ind method, Time Span= 0.00-48.00 hrs, dt= 0.01 hrs / 3
Peak Elev= 64.77' @ 12.17 hrs Surf.Area= 499 sf Storage= 340 cf

Plug-Flow detention time= 34.2 min calculated for 0.053 af (100% of inflow)
Center-of-Mass det. time= 34.2 min (879.0 - 844.7)

Volume	Invert	Avail.Storage	Storage Description
#1	63.50'	531 cf	**Custom Stage Data (Irregular)** Listed below (Recalc)

Elevation (feet)	Surf.Area (sq-ft)	Perim. (feet)	Inc.Store (cubic-feet)	Cum.Store (cubic-feet)	Wet.Area (sq-ft)
63.50	75	91.6	0	0	75
64.50	401	119.7	216	216	559
65.00	588	129.1	246	462	755
65.10	789	138.5	69	531	956

Device	Routing	Invert	Outlet Devices
#1	Primary	63.00'	**12.0" Round RCP_Round 12"** L= 94.0' RCP, square edge headwall, Ke= 0.500 Inlet / Outlet Invert= 63.00' / 62.50' S= 0.0053 '/' Cc= 0.900 n= 0.011 Concrete pipe, straight & clean, Flow Area= 0.79 sf
#2	Device 1	64.30'	**8.0" W x 3.0" H Vert. Orifice/Grate** C= 0.600
#3	Device 1	64.80'	**48.0" x 48.0" Horiz. Orifice/Grate** C= 0.600 Limited to weir flow at low heads
#4	Secondary	65.00'	**8.0' long x 20.0' breadth Broad-Crested Rectangular Weir** Head (feet) 0.20 0.40 0.60 0.80 1.00 1.20 1.40 1.60 Coef. (English) 2.68 2.70 2.70 2.64 2.63 2.64 2.64 2.63
#5	Discarded	63.50'	**3.100 in/hr Exfiltration over Wetted area**

Discarded OutFlow Max=0.05 cfs @ 12.17 hrs HW=64.77' (Free Discharge)
└**5=Exfiltration** (Exfiltration Controls 0.05 cfs)

Primary OutFlow Max=0.47 cfs @ 12.17 hrs HW=64.77' TW=62.90' (Dynamic Tailwater)
└**1=RCP_Round 12"** (Passes 0.47 cfs of 3.74 cfs potential flow)
  ├**2=Orifice/Grate** (Orifice Controls 0.47 cfs @ 2.83 fps)
  └**3=Orifice/Grate** (Controls 0.00 cfs)

Secondary OutFlow Max=0.00 cfs @ 0.00 hrs HW=63.50' TW=62.00' (Dynamic Tailwater)
└**4=Broad-Crested Rectangular Weir** (Controls 0.00 cfs)

Summary for Pond 7S: STA 64

Inflow Area = 0.974 ac, 42.52% Impervious, Inflow Depth = 2.13" for 25-Year event
Inflow = 2.41 cfs @ 12.09 hrs, Volume= 0.172 af
Outflow = 1.42 cfs @ 12.21 hrs, Volume= 0.172 af, Atten= 41%, Lag= 7.1 min
Discarded = 1.42 cfs @ 12.21 hrs, Volume= 0.172 af
Primary = 0.00 cfs @ 0.00 hrs, Volume= 0.000 af

Routing by Dyn-Stor-Ind method, Time Span= 0.00-48.00 hrs, dt= 0.01 hrs / 3
Peak Elev= 65.82' @ 12.21 hrs Surf.Area= 1,893 sf Storage= 1,495 cf

Plug-Flow detention time= (not calculated: outflow precedes inflow)
Center-of-Mass det. time= 38.2 min (878.3 - 840.0)

Volume	Invert	Avail.Storage	Storage Description
#1	65.00'	2,019 cf	**Custom Stage Data (Irregular)**Listed below (Recalc)

Elevation (feet)	Surf.Area (sq-ft)	Perim. (feet)	Inc.Store (cubic-feet)	Cum.Store (cubic-feet)	Wet.Area (sq-ft)
65.00	1,247	616.2	0	0	1,247
65.50	2,179	625.7	846	846	2,236
66.00	1,740	292.5	978	1,823	26,583
66.10	2,187	302.9	196	2,019	27,077

Device	Routing	Invert	Outlet Devices
#1	Primary	65.99'	**20.0' long x 12.0' breadth Broad-Crested Rectangular Weir** Head (feet) 0.20 0.40 0.60 0.80 1.00 1.20 1.40 1.60 Coef. (English) 2.57 2.62 2.70 2.67 2.66 2.67 2.66 2.64
#2	Discarded	65.00'	**3.100 in/hr Exfiltration over Wetted area**

Discarded OutFlow Max=1.42 cfs @ 12.21 hrs HW=65.82' (Free Discharge)
↑—**2=Exfiltration** (Exfiltration Controls 1.42 cfs)

Primary OutFlow Max=0.00 cfs @ 0.00 hrs HW=65.00' TW=63.50' (Dynamic Tailwater)
↑—**1=Broad-Crested Rectangular Weir** (Controls 0.00 cfs)

Summary for Pond 8P: STA 71

Inflow Area = 0.226 ac, 48.01% Impervious, Inflow Depth = 3.15" for 25-Year event
Inflow = 0.83 cfs @ 12.09 hrs, Volume= 0.059 af
Outflow = 0.14 cfs @ 12.58 hrs, Volume= 0.059 af, Atten= 83%, Lag= 29.1 min
Discarded = 0.14 cfs @ 12.58 hrs, Volume= 0.059 af
Primary = 0.00 cfs @ 0.00 hrs, Volume= 0.000 af

Routing by Dyn-Stor-Ind method, Time Span= 0.00-48.00 hrs, dt= 0.01 hrs / 3
Peak Elev= 73.98' @ 12.58 hrs Surf.Area= 1,284 sf Storage= 891 cf

Plug-Flow detention time= (not calculated: outflow precedes inflow)
Center-of-Mass det. time= 56.8 min (887.5 - 830.6)

Volume	Invert	Avail.Storage	Storage Description
#1	72.75'	1,105 cf	**Custom Stage Data (Irregular)** Listed below (Recalc)

Elevation (feet)	Surf.Area (sq-ft)	Perim. (feet)	Inc.Store (cubic-feet)	Cum.Store (cubic-feet)	Wet.Area (sq-ft)
72.75	216	156.5	0	0	216
73.50	873	284.9	381	381	4,729
74.00	1,307	294.3	541	922	5,186
74.12	1,756	303.8	183	1,105	5,640

Device	Routing	Invert	Outlet Devices
#1	Discarded	72.75'	**1.200 in/hr Exfiltration over Wetted area**
#2	Primary	74.00'	**40.0' long x 8.5' breadth Broad-Crested Rectangular Weir**
			Head (feet) 0.20 0.40 0.60 0.80 1.00 1.20 1.40 1.60 1.80 2.00 2.50 3.00 3.50 4.00 4.50 5.00 5.50
			Coef. (English) 2.45 2.54 2.70 2.69 2.68 2.68 2.66 2.64 2.64 2.64 2.65 2.65 2.65 2.66 2.67 2.69 2.71

Discarded OutFlow Max=0.14 cfs @ 12.58 hrs HW=73.98' (Free Discharge)
↑—**1=Exfiltration** (Exfiltration Controls 0.14 cfs)

Primary OutFlow Max=0.00 cfs @ 0.00 hrs HW=72.75' TW=65.00' (Dynamic Tailwater)
↑—**2=Broad-Crested Rectangular Weir** (Controls 0.00 cfs)

Summary for Link DP-A: RIVER

Inflow Area = 1.313 ac, 57.21% Impervious, Inflow Depth = 4.48" for 25-Year event
Inflow = 6.72 cfs @ 12.09 hrs, Volume= 0.490 af
Primary = 6.72 cfs @ 12.09 hrs, Volume= 0.490 af, Atten= 0%, Lag= 0.0 min

Primary outflow = Inflow, Time Span= 0.00-48.00 hrs, dt= 0.01 hrs

Summary for Link DP-B: Broadway CB/Canal

Inflow Area = 1.745 ac, 54.65% Impervious, Inflow Depth = 3.93" for 25-Year event
Inflow = 6.12 cfs @ 12.09 hrs, Volume= 0.571 af
Primary = 6.12 cfs @ 12.09 hrs, Volume= 0.571 af, Atten= 0%, Lag= 0.0 min

Primary outflow = Inflow, Time Span= 0.00-48.00 hrs, dt= 0.01 hrs

Summary for Link DP-C: Essex CB

Inflow Area = 0.470 ac, 88.74% Impervious, Inflow Depth = 5.48" for 25-Year event
Inflow = 2.74 cfs @ 12.08 hrs, Volume= 0.215 af
Primary = 2.74 cfs @ 12.08 hrs, Volume= 0.215 af, Atten= 0%, Lag= 0.0 min

Primary outflow = Inflow, Time Span= 0.00-48.00 hrs, dt= 0.01 hrs

Summary for Link DP-D: Wetland (NE)

Inflow Area = 2.156 ac, 22.76% Impervious, Inflow Depth = 0.00" for 25-Year event
Inflow = 0.00 cfs @ 0.00 hrs, Volume= 0.000 af
Primary = 0.00 cfs @ 0.00 hrs, Volume= 0.000 af, Atten= 0%, Lag= 0.0 min

Primary outflow = Inflow, Time Span= 0.00-48.00 hrs, dt= 0.01 hrs

Summary for Link DP-E: Wetland (SW)

Inflow Area = 0.774 ac, 1.60% Impervious, Inflow Depth = 2.77" for 25-Year event
Inflow = 2.50 cfs @ 12.09 hrs, Volume= 0.179 af
Primary = 2.50 cfs @ 12.09 hrs, Volume= 0.179 af, Atten= 0%, Lag= 0.0 min

Primary outflow = Inflow, Time Span= 0.00-48.00 hrs, dt= 0.01 hrs

Summary for Link DP-F: Haverhill

Inflow Area = 3.003 ac, 38.44% Impervious, Inflow Depth = 0.48" for 25-Year event
Inflow = 1.55 cfs @ 12.09 hrs, Volume= 0.119 af
Primary = 1.55 cfs @ 12.09 hrs, Volume= 0.119 af, Atten= 0%, Lag= 0.0 min

Primary outflow = Inflow, Time Span= 0.00-48.00 hrs, dt= 0.01 hrs

Summary for Link DP-G: Railroad Street

Inflow Area = 0.224 ac, 0.00% Impervious, Inflow Depth = 1.10" for 25-Year event
Inflow = 0.22 cfs @ 12.11 hrs, Volume= 0.021 af
Primary = 0.22 cfs @ 12.11 hrs, Volume= 0.021 af, Atten= 0%, Lag= 0.0 min

Primary outflow = Inflow, Time Span= 0.00-48.00 hrs, dt= 0.01 hrs

Summary for Link DP-H: Bourgoin Park

Inflow Area = 0.913 ac, 4.88% Impervious, Inflow Depth = 1.44" for 25-Year event
Inflow = 1.34 cfs @ 12.10 hrs, Volume= 0.109 af
Primary = 1.34 cfs @ 12.10 hrs, Volume= 0.109 af, Atten= 0%, Lag= 0.0 min

Primary outflow = Inflow, Time Span= 0.00-48.00 hrs, dt= 0.01 hrs

Summary for Link DP-I: 127 May St

Inflow Area = 0.291 ac, 1.50% Impervious, Inflow Depth = 1.18" for 25-Year event
Inflow = 0.32 cfs @ 12.11 hrs, Volume= 0.029 af
Primary = 0.32 cfs @ 12.11 hrs, Volume= 0.029 af, Atten= 0%, Lag= 0.0 min

Primary outflow = Inflow, Time Span= 0.00-48.00 hrs, dt= 0.01 hrs

Summary for Subcatchment PR-A1: STA 1-->14

Runoff = 9.10 cfs @ 12.08 hrs, Volume= 0.673 af, Depth= 6.16"

Runoff by SCS TR-20 method, UH=SCS, Weighted-CN, Time Span= 0.00-48.00 hrs, dt= 0.01 hrs
Type III 24-hr 100-Year Rainfall=7.82"

Area (sf)	CN	Description
24,468	69	50-75% Grass cover, Fair, HSG B
32,708	98	Paved parking, HSG B
57,176	86	Weighted Average
24,468		42.79% Pervious Area
32,708		57.21% Impervious Area

Tc (min)	Length (feet)	Slope (ft/ft)	Velocity (ft/sec)	Capacity (cfs)	Description
6.0					**Direct Entry, Direct**

Summary for Subcatchment PR-B1: STA 12-->25

Runoff = 3.75 cfs @ 12.08 hrs, Volume= 0.309 af, Depth= 7.58"

Runoff by SCS TR-20 method, UH=SCS, Weighted-CN, Time Span= 0.00-48.00 hrs, dt= 0.01 hrs
Type III 24-hr 100-Year Rainfall=7.82"

Area (sf)	CN	Description
204	49	50-75% Grass cover, Fair, HSG A
21,088	98	Paved parking, HSG A
21,292	98	Weighted Average
204		0.96% Pervious Area
21,088		99.04% Impervious Area

Tc (min)	Length (feet)	Slope (ft/ft)	Velocity (ft/sec)	Capacity (cfs)	Description
6.0					**Direct Entry, Direct**

Summary for Subcatchment PR-B2: STA 25-->32

Runoff = 3.71 cfs @ 12.09 hrs, Volume= 0.269 af, Depth= 5.57"

Runoff by SCS TR-20 method, UH=SCS, Weighted-CN, Time Span= 0.00-48.00 hrs, dt= 0.01 hrs
Type III 24-hr 100-Year Rainfall=7.82"

Area (sf)	CN	Description
14,824	69	50-75% Grass cover, Fair, HSG B
10,366	98	Paved parking, HSG B
25,190	81	Weighted Average
14,824		58.85% Pervious Area
10,366		41.15% Impervious Area

Tc (min)	Length (feet)	Slope (ft/ft)	Velocity (ft/sec)	Capacity (cfs)	Description
6.0					**Direct Entry, Direct**

Summary for Subcatchment PR-B3: STA 25 -->32

Runoff = 4.19 cfs @ 12.09 hrs, Volume= 0.302 af, Depth= 5.34"

Runoff by SCS TR-20 method, UH=SCS, Weighted-CN, Time Span= 0.00-48.00 hrs, dt= 0.01 hrs
Type III 24-hr 100-Year Rainfall=7.82"

Area (sf)	CN	Description
19,443	69	50-75% Grass cover, Fair, HSG B
10,082	98	Paved parking, HSG B
29,525	79	Weighted Average
19,443		65.85% Pervious Area
10,082		34.15% Impervious Area

Tc (min)	Length (feet)	Slope (ft/ft)	Velocity (ft/sec)	Capacity (cfs)	Description
6.0					**Direct Entry, Direct**

Summary for Subcatchment PR-C1: Essex

Runoff = 3.57 cfs @ 12.08 hrs, Volume= 0.283 af, Depth= 7.22"

Runoff by SCS TR-20 method, UH=SCS, Weighted-CN, Time Span= 0.00-48.00 hrs, dt= 0.01 hrs
Type III 24-hr 100-Year Rainfall=7.82"

Area (sf)	CN	Description
2,306	69	50-75% Grass cover, Fair, HSG B
18,181	98	Paved parking, HSG B
20,487	95	Weighted Average
2,306		11.26% Pervious Area
18,181		88.74% Impervious Area

Tc (min)	Length (feet)	Slope (ft/ft)	Velocity (ft/sec)	Capacity (cfs)	Description
6.0					**Direct Entry, Direct**

Summary for Subcatchment PR-D1: STA 34-->49

Runoff = 12.83 cfs @ 12.09 hrs, Volume= 0.918 af, Depth= 5.11"

Runoff by SCS TR-20 method, UH=SCS, Weighted-CN, Time Span= 0.00-48.00 hrs, dt= 0.01 hrs
Type III 24-hr 100-Year Rainfall=7.82"

Area (sf)	CN	Description
67,573	69	50-75% Grass cover, Fair, HSG B
21,377	98	Paved parking, HSG B
4,958	96	Gravel surface, HSG B
93,908	77	Weighted Average
72,531		77.24% Pervious Area
21,377		22.76% Impervious Area

Tc (min)	Length (feet)	Slope (ft/ft)	Velocity (ft/sec)	Capacity (cfs)	Description
6.0					**Direct Entry, Direct**

Summary for Subcatchment PR-E1: STA 39-->48

Runoff = 3.81 cfs @ 12.09 hrs, Volume= 0.271 af, Depth= 4.20"

Runoff by SCS TR-20 method, UH=SCS, Weighted-CN, Time Span= 0.00-48.00 hrs, dt= 0.01 hrs
Type III 24-hr 100-Year Rainfall=7.82"

Area (sf)	CN	Description
33,189	69	50-75% Grass cover, Fair, HSG B
541	98	Paved parking, HSG B
33,730	69	Weighted Average
33,189		98.40% Pervious Area
541		1.60% Impervious Area

Tc (min)	Length (feet)	Slope (ft/ft)	Velocity (ft/sec)	Capacity (cfs)	Description
6.0					**Direct Entry, Direct**

Summary for Subcatchment PR-F1: STA 49-->51

Runoff = 2.19 cfs @ 12.09 hrs, Volume= 0.158 af, Depth= 5.34"

Runoff by SCS TR-20 method, UH=SCS, Weighted-CN, Time Span= 0.00-48.00 hrs, dt= 0.01 hrs
Type III 24-hr 100-Year Rainfall=7.82"

Area (sf)	CN	Description
5,957	49	50-75% Grass cover, Fair, HSG A
9,477	98	Paved parking, HSG A
15,434	79	Weighted Average
5,957		38.60% Pervious Area
9,477		61.40% Impervious Area

Tc (min)	Length (feet)	Slope (ft/ft)	Velocity (ft/sec)	Capacity (cfs)	Description
6.0					**Direct Entry, Direct**

Summary for Subcatchment PR-F2: STA 51->55

Runoff = 3.01 cfs @ 12.09 hrs, Volume= 0.217 af, Depth= 3.20"

Runoff by SCS TR-20 method, UH=SCS, Weighted-CN, Time Span= 0.00-48.00 hrs, dt= 0.01 hrs
Type III 24-hr 100-Year Rainfall=7.82"

Area (sf)	CN	Description
27,588	49	50-75% Grass cover, Fair, HSG A
7,921	98	Paved parking, HSG A
35,509	60	Weighted Average
27,588		77.69% Pervious Area
7,921		22.31% Impervious Area

Tc (min)	Length (feet)	Slope (ft/ft)	Velocity (ft/sec)	Capacity (cfs)	Description
6.0					**Direct Entry, Direct**

Summary for Subcatchment PR-F3: STA 55-->58

Runoff = 1.30 cfs @ 12.09 hrs, Volume= 0.092 af, Depth= 3.97"

Runoff by SCS TR-20 method, UH=SCS, Weighted-CN, Time Span= 0.00-48.00 hrs, dt= 0.01 hrs
Type III 24-hr 100-Year Rainfall=7.82"

Area (sf)	CN	Description
7,695	49	50-75% Grass cover, Fair, HSG A
4,464	98	Paved parking, HSG A
12,159	67	Weighted Average
7,695		63.29% Pervious Area
4,464		36.71% Impervious Area

Tc (min)	Length (feet)	Slope (ft/ft)	Velocity (ft/sec)	Capacity (cfs)	Description
6.0					**Direct Entry, Direct**

Summary for Subcatchment PR-F4: STA 58-->62

Runoff = 1.70 cfs @ 12.09 hrs, Volume= 0.121 af, Depth= 4.31"

Runoff by SCS TR-20 method, UH=SCS, Weighted-CN, Time Span= 0.00-48.00 hrs, dt= 0.01 hrs
Type III 24-hr 100-Year Rainfall=7.82"

Area (sf)	CN	Description
8,240	49	50-75% Grass cover, Fair, HSG A
6,412	98	Paved parking, HSG A
14,652	70	Weighted Average
8,240		56.24% Pervious Area
6,412		43.76% Impervious Area

Tc (min)	Length (feet)	Slope (ft/ft)	Velocity (ft/sec)	Capacity (cfs)	Description
6.0					**Direct Entry, Direct**

Summary for Subcatchment PR-F5: STA 62-->67

Runoff = 1.14 cfs @ 12.09 hrs, Volume= 0.081 af, Depth= 3.97"

Runoff by SCS TR-20 method, UH=SCS, Weighted-CN, Time Span= 0.00-48.00 hrs, dt= 0.01 hrs
Type III 24-hr 100-Year Rainfall=7.82"

Area (sf)	CN	Description
6,667	49	50-75% Grass cover, Fair, HSG A
3,972	98	Paved parking, HSG A
10,639	67	Weighted Average
6,667		62.67% Pervious Area
3,972		37.33% Impervious Area

Tc (min)	Length (feet)	Slope (ft/ft)	Velocity (ft/sec)	Capacity (cfs)	Description
6.0					**Direct Entry, Direct**

Summary for Subcatchment PR-F6: STA63-->67

Runoff = 3.68 cfs @ 12.09 hrs, Volume= 0.262 af, Depth= 4.20"

Runoff by SCS TR-20 method, UH=SCS, Weighted-CN, Time Span= 0.00-48.00 hrs, dt= 0.01 hrs
Type III 24-hr 100-Year Rainfall=7.82"

Area (sf)	CN	Description
19,270	49	50-75% Grass cover, Fair, HSG A
13,311	98	Paved parking, HSG A
32,581	69	Weighted Average
19,270		59.14% Pervious Area
13,311		40.86% Impervious Area

Tc (min)	Length (feet)	Slope (ft/ft)	Velocity (ft/sec)	Capacity (cfs)	Description
6.0					**Direct Entry, Direct**

Summary for Subcatchment PR-F7: STA 70-->74

Runoff = 1.23 cfs @ 12.09 hrs, Volume= 0.088 af, Depth= 4.65"

Runoff by SCS TR-20 method, UH=SCS, Weighted-CN, Time Span= 0.00-48.00 hrs, dt= 0.01 hrs
Type III 24-hr 100-Year Rainfall=7.82"

Area (sf)	CN	Description
5,119	49	50-75% Grass cover, Fair, HSG A
4,727	98	Paved parking, HSG A
9,846	73	Weighted Average
5,119		51.99% Pervious Area
4,727		48.01% Impervious Area

Tc (min)	Length (feet)	Slope (ft/ft)	Velocity (ft/sec)	Capacity (cfs)	Description
6.0					**Direct Entry, Direct**

Summary for Subcatchment PR-G1: STA 57-->62

Runoff = 0.48 cfs @ 12.10 hrs, Volume= 0.038 af, Depth= 2.04"

Runoff by SCS TR-20 method, UH=SCS, Weighted-CN, Time Span= 0.00-48.00 hrs, dt= 0.01 hrs
Type III 24-hr 100-Year Rainfall=7.82"

Area (sf)	CN	Description
9,759	49	50-75% Grass cover, Fair, HSG A
9,759		100.00% Pervious Area

Tc (min)	Length (feet)	Slope (ft/ft)	Velocity (ft/sec)	Capacity (cfs)	Description
6.0					**Direct Entry, Direct**

Summary for Subcatchment PR-H1: STA 55-->61

Runoff = 1.21 cfs @ 12.10 hrs, Volume= 0.090 af, Depth= 2.56"

Runoff by SCS TR-20 method, UH=SCS, Weighted-CN, Time Span= 0.00-48.00 hrs, dt= 0.01 hrs
Type III 24-hr 100-Year Rainfall=7.82"

Area (sf)	CN	Description
16,666	49	50-75% Grass cover, Fair, HSG A
1,798	96	Gravel surface, HSG A
18,464	54	Weighted Average
18,464		100.00% Pervious Area

Tc (min)	Length (feet)	Slope (ft/ft)	Velocity (ft/sec)	Capacity (cfs)	Description
6.0					**Direct Entry, Direct**

Summary for Subcatchment PR-H2: STA 62-->71

Runoff = 1.32 cfs @ 12.10 hrs, Volume= 0.100 af, Depth= 2.45"

Runoff by SCS TR-20 method, UH=SCS, Weighted-CN, Time Span= 0.00-48.00 hrs, dt= 0.01 hrs
Type III 24-hr 100-Year Rainfall=7.82"

Area (sf)	CN	Description
19,380	49	50-75% Grass cover, Fair, HSG A
1,943	98	Paved parking, HSG A
21,323	53	Weighted Average
19,380		90.89% Pervious Area
1,943		9.11% Impervious Area

Tc (min)	Length (feet)	Slope (ft/ft)	Velocity (ft/sec)	Capacity (cfs)	Description
6.0					**Direct Entry, Direct**

Summary for Subcatchment PR-I1: STA 64-->70

Runoff = 0.67 cfs @ 12.10 hrs, Volume= 0.052 af, Depth= 2.14"

Runoff by SCS TR-20 method, UH=SCS, Weighted-CN, Time Span= 0.00-48.00 hrs, dt= 0.01 hrs
Type III 24-hr 100-Year Rainfall=7.82"

Area (sf)	CN	Description
12,506	49	50-75% Grass cover, Fair, HSG A
191	98	Paved parking, HSG A
12,697	50	Weighted Average
12,506		98.50% Pervious Area
191		1.50% Impervious Area

Tc (min)	Length (feet)	Slope (ft/ft)	Velocity (ft/sec)	Capacity (cfs)	Description
6.0					**Direct Entry, Direct**

Summary for Pond 1P: STA 30

Inflow Area = 0.578 ac, 41.15% Impervious, Inflow Depth = 5.57" for 100-Year event
Inflow = 3.71 cfs @ 12.09 hrs, Volume= 0.269 af
Outflow = 1.49 cfs @ 12.31 hrs, Volume= 0.267 af, Atten= 60%, Lag= 13.6 min
Discarded = 0.04 cfs @ 12.31 hrs, Volume= 0.071 af
Primary = 1.45 cfs @ 12.31 hrs, Volume= 0.196 af
Secondary = 0.00 cfs @ 0.00 hrs, Volume= 0.000 af

Routing by Dyn-Stor-Ind method, Time Span= 0.00-48.00 hrs, dt= 0.01 hrs / 3
Peak Elev= 51.67' @ 12.31 hrs Surf.Area= 3,694 sf Storage= 4,920 cf

Plug-Flow detention time= 230.1 min calculated for 0.267 af (99% of inflow)
Center-of-Mass det. time= 226.2 min (1,027.5 - 801.4)

Volume	Invert	Avail.Storage	Storage Description
#1	49.50'	6,207 cf	**Custom Stage Data (Irregular)**Listed below (Recalc)

Elevation (feet)	Surf.Area (sq-ft)	Perim. (feet)	Inc.Store (cubic-feet)	Cum.Store (cubic-feet)	Wet.Area (sq-ft)
49.50	975	350.2	0	0	975
50.50	2,149	423.2	1,524	1,524	5,484
51.50	3,467	449.8	2,782	4,306	7,383
52.00	4,149	459.2	1,901	6,207	8,100

Device	Routing	Invert	Outlet Devices
#1	Primary	49.50'	**12.0" Round RCP_Round 12"** L= 295.0' RCP, rounded edge headwall, Ke= 0.100 Inlet / Outlet Invert= 49.50' / 46.55' S= 0.0100 '/' Cc= 0.900 n= 0.013 Concrete pipe, bends & connections, Flow Area= 0.79 sf
#2	Device 1	50.40'	**4.0" Vert. Orifice/Grate** C= 0.600
#3	Device 1	51.60'	**48.0" x 48.0" Horiz. Orifice/Grate** C= 0.600 Limited to weir flow at low heads
#4	Secondary	51.99'	**14.0' long x 90.0' breadth Broad-Crested Rectangular Weir** Head (feet) 0.20 0.40 0.60 0.80 1.00 1.20 1.40 1.60 Coef. (English) 2.68 2.70 2.70 2.64 2.63 2.64 2.64 2.63
#5	Discarded	49.50'	**0.230 in/hr Exfiltration over Wetted area**

Discarded OutFlow Max=0.04 cfs @ 12.31 hrs HW=51.67' (Free Discharge)
└**5=Exfiltration** (Exfiltration Controls 0.04 cfs)

Primary OutFlow Max=1.45 cfs @ 12.31 hrs HW=51.67' TW=0.00' (Dynamic Tailwater)
└**1=RCP_Round 12"** (Passes 1.45 cfs of 3.98 cfs potential flow)
  ├**2=Orifice/Grate** (Orifice Controls 0.44 cfs @ 5.06 fps)
  └**3=Orifice/Grate** (Weir Controls 1.00 cfs @ 0.88 fps)

Secondary OutFlow Max=0.00 cfs @ 0.00 hrs HW=49.50' TW=0.00' (Dynamic Tailwater)
└**4=Broad-Crested Rectangular Weir** (Controls 0.00 cfs)

Summary for Pond 2ESF: Southeast Sediment Forebay

Volume	Invert	Avail.Storage	Storage Description
#1	49.75'	76 cf	**Custom Stage Data (Irregular)**Listed below (Recalc)

Elevation (feet)	Surf.Area (sq-ft)	Perim. (feet)	Inc.Store (cubic-feet)	Cum.Store (cubic-feet)	Wet.Area (sq-ft)
49.75	35	21.3	0	0	35
50.75	127	40.2	76	76	132

Summary for Pond 2P: STA 37

Inflow Area = 2.156 ac, 22.76% Impervious, Inflow Depth = 5.11" for 100-Year event
Inflow = 12.83 cfs @ 12.09 hrs, Volume= 0.918 af
Outflow = 8.37 cfs @ 12.18 hrs, Volume= 0.918 af, Atten= 35%, Lag= 5.5 min
Discarded = 8.37 cfs @ 12.18 hrs, Volume= 0.918 af
Primary = 0.00 cfs @ 0.00 hrs, Volume= 0.000 af

Routing by Dyn-Stor-Ind method, Time Span= 0.00-48.00 hrs, dt= 0.01 hrs / 3

Peak Elev= 50.80' @ 12.18 hrs Surf.Area= 3,444 sf Storage= 2,506 cf

Plug-Flow detention time= (not calculated: outflow precedes inflow)
Center-of-Mass det. time= 1.7 min (812.4 - 810.6)

Volume	Invert	Avail.Storage	Storage Description
#1	49.75'	5,367 cf	**Custom Stage Data (Irregular)**Listed below (Recalc)

Elevation (feet)	Surf.Area (sq-ft)	Perim. (feet)	Inc.Store (cubic-feet)	Cum.Store (cubic-feet)	Wet.Area (sq-ft)
49.75	1,222	233.8	0	0	1,222
50.25	2,424	616.0	895	895	27,069
50.75	3,355	625.4	1,438	2,333	28,048
51.50	4,778	639.5	3,034	5,367	29,545

Device	Routing	Invert	Outlet Devices
#1	Discarded	49.75'	**12.850 in/hr Exfiltration over Wetted area**
#2	Primary	51.00'	**8.0' long x 55.0' breadth Broad-Crested Rectangular Weir**
			Head (feet) 0.20 0.40 0.60 0.80 1.00 1.20 1.40 1.60
			Coef. (English) 2.68 2.70 2.70 2.64 2.63 2.64 2.64 2.63

Discarded OutFlow Max=8.37 cfs @ 12.18 hrs HW=50.80' (Free Discharge)
↑**1=Exfiltration** (Exfiltration Controls 8.37 cfs)

Primary OutFlow Max=0.00 cfs @ 0.00 hrs HW=49.75' TW=0.00' (Dynamic Tailwater)
↑**2=Broad-Crested Rectangular Weir** (Controls 0.00 cfs)

Summary for Pond 2WSF: Northwest Sediment Forebay

Volume	Invert	Avail.Storage	Storage Description
#1	49.75'	180 cf	**Custom Stage Data (Irregular)**Listed below (Recalc)

Elevation (feet)	Surf.Area (sq-ft)	Perim. (feet)	Inc.Store (cubic-feet)	Cum.Store (cubic-feet)	Wet.Area (sq-ft)
49.75	108	42.0	0	0	108
50.75	263	60.9	180	180	271

Summary for Pond 3P: STA 52

Inflow Area = 2.649 ac, 35.37% Impervious, Inflow Depth = 1.10" for 100-Year event
Inflow = 3.01 cfs @ 12.09 hrs, Volume= 0.243 af
Outflow = 2.57 cfs @ 12.33 hrs, Volume= 0.243 af, Atten= 14%, Lag= 14.5 min
Discarded = 0.17 cfs @ 12.33 hrs, Volume= 0.150 af
Primary = 2.41 cfs @ 12.33 hrs, Volume= 0.093 af

Routing by Dyn-Stor-Ind method, Time Span= 0.00-48.00 hrs, dt= 0.01 hrs / 3
Peak Elev= 59.22' @ 12.33 hrs Surf.Area= 2,616 sf Storage= 2,578 cf

Plug-Flow detention time= 99.5 min calculated for 0.243 af (100% of inflow)
Center-of-Mass det. time= 99.5 min (935.6 - 836.1)

Volume	Invert	Avail.Storage	Storage Description
#1	57.50'	3,378 cf	**Custom Stage Data (Irregular)**Listed below (Recalc)

Elevation (feet)	Surf.Area (sq-ft)	Perim. (feet)	Inc.Store (cubic-feet)	Cum.Store (cubic-feet)	Wet.Area (sq-ft)
57.50	501	267.0	0	0	501
58.50	1,697	425.1	1,040	1,040	9,215
59.00	2,342	435.5	1,005	2,045	9,959
59.50	3,002	444.9	1,333	3,378	10,654

Device	Routing	Invert	Outlet Devices
#1	Discarded	57.50'	**0.700 in/hr Exfiltration over Wetted area**
#2	Primary	59.00'	**9.0' long x 100.0' breadth Broad-Crested Rectangular Weir**
			Head (feet) 0.20 0.40 0.60 0.80 1.00 1.20 1.40 1.60
			Coef. (English) 2.68 2.70 2.70 2.64 2.63 2.64 2.64 2.63

Discarded OutFlow Max=0.17 cfs @ 12.33 hrs HW=59.21' (Free Discharge)
↑—**1=Exfiltration** (Exfiltration Controls 0.17 cfs)

Primary OutFlow Max=2.40 cfs @ 12.33 hrs HW=59.21' TW=0.00' (Dynamic Tailwater)
↑—**2=Broad-Crested Rectangular Weir** (Weir Controls 2.40 cfs @ 1.24 fps)

Summary for Pond 4P: STA 30

Inflow Area = 1.834 ac, 41.17% Impervious, Inflow Depth = 0.99" for 100-Year event
Inflow = 3.15 cfs @ 12.20 hrs, Volume= 0.151 af
Outflow = 2.25 cfs @ 12.31 hrs, Volume= 0.151 af, Atten= 29%, Lag= 6.7 min
Discarded = 0.93 cfs @ 12.31 hrs, Volume= 0.125 af
Primary = 1.31 cfs @ 12.31 hrs, Volume= 0.026 af

Routing by Dyn-Stor-Ind method, Time Span= 0.00-48.00 hrs, dt= 0.01 hrs / 3
Peak Elev= 61.27' @ 12.31 hrs Surf.Area= 1,583 sf Storage= 1,742 cf

Plug-Flow detention time= (not calculated: outflow precedes inflow)
Center-of-Mass det. time= 18.1 min (814.3 - 796.2)

Volume	Invert	Avail.Storage	Storage Description
#1	59.50'	2,096 cf	**Custom Stage Data (Irregular)**Listed below (Recalc)

Elevation (feet)	Surf.Area (sq-ft)	Perim. (feet)	Inc.Store (cubic-feet)	Cum.Store (cubic-feet)	Wet.Area (sq-ft)
59.50	294	178.7	0	0	294
60.50	1,031	429.0	625	625	12,402
61.00	1,697	445.9	675	1,300	13,599
61.50	1,488	215.0	796	2,096	25,744

Device	Routing	Invert	Outlet Devices
#1	Discarded	59.50'	**1.900 in/hr Exfiltration over Wetted area**
#2	Primary	61.00'	**3.5' long x 50.0' breadth Broad-Crested Rectangular Weir**
			Head (feet) 0.20 0.40 0.60 0.80 1.00 1.20 1.40 1.60

Coef. (English) 2.68 2.70 2.70 2.64 2.63 2.64 2.64 2.63

Discarded OutFlow Max=0.93 cfs @ 12.31 hrs HW=61.27' (Free Discharge)
1=Exfiltration (Exfiltration Controls 0.93 cfs)

Primary OutFlow Max=1.31 cfs @ 12.31 hrs HW=61.27' TW=59.21' (Dynamic Tailwater)
2=Broad-Crested Rectangular Weir (Weir Controls 1.31 cfs @ 1.39 fps)

Summary for Pond 5P: STA 30

Inflow Area = 1.555 ac, 41.97% Impervious, Inflow Depth = 1.41" for 100-Year event
Inflow = 3.41 cfs @ 12.14 hrs, Volume= 0.182 af
Outflow = 2.73 cfs @ 12.21 hrs, Volume= 0.182 af, Atten= 20%, Lag= 4.1 min
Discarded = 0.36 cfs @ 12.21 hrs, Volume= 0.123 af
Primary = 2.38 cfs @ 12.21 hrs, Volume= 0.059 af

Routing by Dyn-Stor-Ind method, Time Span= 0.00-48.00 hrs, dt= 0.01 hrs / 3
Peak Elev= 63.31' @ 12.21 hrs Surf.Area= 2,200 sf Storage= 1,789 cf

Plug-Flow detention time= (not calculated: outflow precedes inflow)
Center-of-Mass det. time= 28.0 min (829.5 - 801.5)

Volume	Invert	Avail.Storage	Storage Description
#1	62.00'	2,220 cf	**Custom Stage Data (Irregular)** Listed below (Recalc)

Elevation (feet)	Surf.Area (sq-ft)	Perim. (feet)	Inc.Store (cubic-feet)	Cum.Store (cubic-feet)	Wet.Area (sq-ft)
62.00	566	373.9	0	0	566
62.50	1,169	410.0	425	425	2,826
63.00	1,798	429.2	736	1,161	4,126
63.50	2,456	448.0	1,059	2,220	5,456

Device	Routing	Invert	Outlet Devices
#1	Discarded	62.00'	**3.100 in/hr Exfiltration over Wetted area**
#2	Primary	63.00'	**5.0' long x 40.0' breadth Broad-Crested Rectangular Weir**
			Head (feet) 0.20 0.40 0.60 0.80 1.00 1.20 1.40 1.60
			Coef. (English) 2.68 2.70 2.70 2.64 2.63 2.64 2.64 2.63

Discarded OutFlow Max=0.36 cfs @ 12.21 hrs HW=63.31' (Free Discharge)
1=Exfiltration (Exfiltration Controls 0.36 cfs)

Primary OutFlow Max=2.38 cfs @ 12.21 hrs HW=63.31' TW=61.05' (Dynamic Tailwater)
2=Broad-Crested Rectangular Weir (Weir Controls 2.38 cfs @ 1.51 fps)

Summary for Pond 6P: STA 30

Inflow Area = 1.218 ac, 41.48% Impervious, Inflow Depth = 0.95" for 100-Year event
Inflow = 2.12 cfs @ 12.16 hrs, Volume= 0.096 af
Outflow = 2.11 cfs @ 12.17 hrs, Volume= 0.096 af, Atten= 0%, Lag= 0.3 min
Discarded = 0.05 cfs @ 12.17 hrs, Volume= 0.035 af
Primary = 2.06 cfs @ 12.17 hrs, Volume= 0.061 af
Secondary = 0.00 cfs @ 0.00 hrs, Volume= 0.000 af

Routing by Dyn-Stor-Ind method, Time Span= 0.00-48.00 hrs, dt= 0.01 hrs / 3
Peak Elev= 64.89' @ 12.17 hrs Surf.Area= 545 sf Storage= 402 cf

Plug-Flow detention time= 25.1 min calculated for 0.096 af (100% of inflow)
Center-of-Mass det. time= 25.1 min (841.5 - 816.4)

Volume	Invert	Avail.Storage	Storage Description
#1	63.50'	531 cf	**Custom Stage Data (Irregular)** Listed below (Recalc)

Elevation (feet)	Surf.Area (sq-ft)	Perim. (feet)	Inc.Store (cubic-feet)	Cum.Store (cubic-feet)	Wet.Area (sq-ft)
63.50	75	91.6	0	0	75
64.50	401	119.7	216	216	559
65.00	588	129.1	246	462	755
65.10	789	138.5	69	531	956

Device	Routing	Invert	Outlet Devices
#1	Primary	63.00'	**12.0" Round RCP_Round 12"** L= 94.0' RCP, square edge headwall, Ke= 0.500 Inlet / Outlet Invert= 63.00' / 62.50' S= 0.0053 '/' Cc= 0.900 n= 0.011 Concrete pipe, straight & clean, Flow Area= 0.79 sf
#2	Device 1	64.30'	**8.0" W x 3.0" H Vert. Orifice/Grate** C= 0.600
#3	Device 1	64.80'	**48.0" x 48.0" Horiz. Orifice/Grate** C= 0.600 Limited to weir flow at low heads
#4	Secondary	65.00'	**8.0' long x 20.0' breadth Broad-Crested Rectangular Weir** Head (feet) 0.20 0.40 0.60 0.80 1.00 1.20 1.40 1.60 Coef. (English) 2.68 2.70 2.70 2.64 2.63 2.64 2.64 2.63
#5	Discarded	63.50'	**3.100 in/hr Exfiltration over Wetted area**

Discarded OutFlow Max=0.05 cfs @ 12.17 hrs HW=64.89' (Free Discharge)
└**5=Exfiltration** (Exfiltration Controls 0.05 cfs)

Primary OutFlow Max=2.06 cfs @ 12.17 hrs HW=64.89' TW=63.29' (Dynamic Tailwater)
└**1=RCP_Round 12"** (Passes 2.06 cfs of 3.91 cfs potential flow)
  ├**2=Orifice/Grate** (Orifice Controls 0.55 cfs @ 3.29 fps)
  └**3=Orifice/Grate** (Weir Controls 1.51 cfs @ 1.00 fps)

Secondary OutFlow Max=0.00 cfs @ 0.00 hrs HW=63.50' TW=62.00' (Dynamic Tailwater)
└**4=Broad-Crested Rectangular Weir** (Controls 0.00 cfs)

Summary for Pond 7S: STA 64

Inflow Area = 0.974 ac, 42.52% Impervious, Inflow Depth = 3.38" for 100-Year event
Inflow = 3.68 cfs @ 12.09 hrs, Volume= 0.275 af
Outflow = 3.23 cfs @ 12.17 hrs, Volume= 0.275 af, Atten= 12%, Lag= 5.0 min
Discarded = 1.93 cfs @ 12.17 hrs, Volume= 0.260 af
Primary = 1.30 cfs @ 12.17 hrs, Volume= 0.015 af

Routing by Dyn-Stor-Ind method, Time Span= 0.00-48.00 hrs, dt= 0.01 hrs / 3
Peak Elev= 66.08' @ 12.17 hrs Surf.Area= 2,076 sf Storage= 1,969 cf

Plug-Flow detention time= (not calculated: outflow precedes inflow)
Center-of-Mass det. time= 32.8 min (856.5 - 823.7)

Volume	Invert	Avail.Storage	Storage Description
#1	65.00'	2,019 cf	**Custom Stage Data (Irregular)**Listed below (Recalc)

Elevation (feet)	Surf.Area (sq-ft)	Perim. (feet)	Inc.Store (cubic-feet)	Cum.Store (cubic-feet)	Wet.Area (sq-ft)
65.00	1,247	616.2	0	0	1,247
65.50	2,179	625.7	846	846	2,236
66.00	1,740	292.5	978	1,823	26,583
66.10	2,187	302.9	196	2,019	27,077

Device	Routing	Invert	Outlet Devices
#1	Primary	65.99'	**20.0' long x 12.0' breadth Broad-Crested Rectangular Weir** Head (feet) 0.20 0.40 0.60 0.80 1.00 1.20 1.40 1.60 Coef. (English) 2.57 2.62 2.70 2.67 2.66 2.67 2.66 2.64
#2	Discarded	65.00'	**3.100 in/hr Exfiltration over Wetted area**

Discarded OutFlow Max=1.93 cfs @ 12.17 hrs HW=66.08' (Free Discharge)
↑—**2=Exfiltration** (Exfiltration Controls 1.93 cfs)

Primary OutFlow Max=1.30 cfs @ 12.17 hrs HW=66.08' TW=64.89' (Dynamic Tailwater)
↑—**1=Broad-Crested Rectangular Weir** (Weir Controls 1.30 cfs @ 0.75 fps)

Summary for Pond 8P: STA 71

Inflow Area = 0.226 ac, 48.01% Impervious, Inflow Depth = 4.65" for 100-Year event
Inflow = 1.23 cfs @ 12.09 hrs, Volume= 0.088 af
Outflow = 0.83 cfs @ 12.18 hrs, Volume= 0.088 af, Atten= 33%, Lag= 5.3 min
Discarded = 0.15 cfs @ 12.18 hrs, Volume= 0.075 af
Primary = 0.68 cfs @ 12.18 hrs, Volume= 0.013 af

Routing by Dyn-Stor-Ind method, Time Span= 0.00-48.00 hrs, dt= 0.01 hrs / 3
Peak Elev= 74.04' @ 12.18 hrs Surf.Area= 1,436 sf Storage= 972 cf

Plug-Flow detention time= 52.9 min calculated for 0.088 af (100% of inflow)
Center-of-Mass det. time= 52.9 min (872.3 - 819.4)

Volume	Invert	Avail.Storage	Storage Description
#1	72.75'	1,105 cf	**Custom Stage Data (Irregular)** Listed below (Recalc)

Elevation (feet)	Surf.Area (sq-ft)	Perim. (feet)	Inc.Store (cubic-feet)	Cum.Store (cubic-feet)	Wet.Area (sq-ft)
72.75	216	156.5	0	0	216
73.50	873	284.9	381	381	4,729
74.00	1,307	294.3	541	922	5,186
74.12	1,756	303.8	183	1,105	5,640

Device	Routing	Invert	Outlet Devices
#1	Discarded	72.75'	**1.200 in/hr Exfiltration over Wetted area**
#2	Primary	74.00'	**40.0' long x 8.5' breadth Broad-Crested Rectangular Weir** Head (feet) 0.20 0.40 0.60 0.80 1.00 1.20 1.40 1.60 1.80 2.00 2.50 3.00 3.50 4.00 4.50 5.00 5.50 Coef. (English) 2.45 2.54 2.70 2.69 2.68 2.68 2.66 2.64 2.64 2.64 2.65 2.65 2.66 2.67 2.69 2.71

Discarded OutFlow Max=0.15 cfs @ 12.18 hrs HW=74.04' (Free Discharge)
↑**1=Exfiltration** (Exfiltration Controls 0.15 cfs)

Primary OutFlow Max=0.68 cfs @ 12.18 hrs HW=74.04' TW=66.08' (Dynamic Tailwater)
↑**2=Broad-Crested Rectangular Weir** (Weir Controls 0.68 cfs @ 0.47 fps)

Summary for Link DP-A: RIVER

Inflow Area = 1.313 ac, 57.21% Impervious, Inflow Depth = 6.16" for 100-Year event
Inflow = 9.10 cfs @ 12.08 hrs, Volume= 0.673 af
Primary = 9.10 cfs @ 12.08 hrs, Volume= 0.673 af, Atten= 0%, Lag= 0.0 min

Primary outflow = Inflow, Time Span= 0.00-48.00 hrs, dt= 0.01 hrs

Summary for Link DP-B: Broadway CB/Canal

Inflow Area = 1.745 ac, 54.65% Impervious, Inflow Depth = 5.55" for 100-Year event
Inflow = 8.30 cfs @ 12.09 hrs, Volume= 0.807 af
Primary = 8.30 cfs @ 12.09 hrs, Volume= 0.807 af, Atten= 0%, Lag= 0.0 min

Primary outflow = Inflow, Time Span= 0.00-48.00 hrs, dt= 0.01 hrs

Summary for Link DP-C: Essex CB

Inflow Area = 0.470 ac, 88.74% Impervious, Inflow Depth = 7.22" for 100-Year event
Inflow = 3.57 cfs @ 12.08 hrs, Volume= 0.283 af
Primary = 3.57 cfs @ 12.08 hrs, Volume= 0.283 af, Atten= 0%, Lag= 0.0 min

Primary outflow = Inflow, Time Span= 0.00-48.00 hrs, dt= 0.01 hrs

Summary for Link DP-D: Wetland (NE)

Inflow Area = 2.156 ac, 22.76% Impervious, Inflow Depth = 0.00" for 100-Year event
Inflow = 0.00 cfs @ 0.00 hrs, Volume= 0.000 af
Primary = 0.00 cfs @ 0.00 hrs, Volume= 0.000 af, Atten= 0%, Lag= 0.0 min

Primary outflow = Inflow, Time Span= 0.00-48.00 hrs, dt= 0.01 hrs

Summary for Link DP-E: Wetland (SW)

Inflow Area = 0.774 ac, 1.60% Impervious, Inflow Depth = 4.20" for 100-Year event
Inflow = 3.81 cfs @ 12.09 hrs, Volume= 0.271 af
Primary = 3.81 cfs @ 12.09 hrs, Volume= 0.271 af, Atten= 0%, Lag= 0.0 min

Primary outflow = Inflow, Time Span= 0.00-48.00 hrs, dt= 0.01 hrs

Summary for Link DP-F: Haverhill

Inflow Area = 3.003 ac, 38.44% Impervious, Inflow Depth = 1.00" for 100-Year event
Inflow = 3.26 cfs @ 12.32 hrs, Volume= 0.251 af
Primary = 3.26 cfs @ 12.32 hrs, Volume= 0.251 af, Atten= 0%, Lag= 0.0 min

Primary outflow = Inflow, Time Span= 0.00-48.00 hrs, dt= 0.01 hrs

Summary for Link DP-G: Railroad Street

Inflow Area = 0.224 ac, 0.00% Impervious, Inflow Depth = 2.04" for 100-Year event
Inflow = 0.48 cfs @ 12.10 hrs, Volume= 0.038 af
Primary = 0.48 cfs @ 12.10 hrs, Volume= 0.038 af, Atten= 0%, Lag= 0.0 min

Primary outflow = Inflow, Time Span= 0.00-48.00 hrs, dt= 0.01 hrs

Summary for Link DP-H: Bourgoin Park

Inflow Area = 0.913 ac, 4.88% Impervious, Inflow Depth = 2.50" for 100-Year event
Inflow = 2.53 cfs @ 12.10 hrs, Volume= 0.190 af
Primary = 2.53 cfs @ 12.10 hrs, Volume= 0.190 af, Atten= 0%, Lag= 0.0 min

Primary outflow = Inflow, Time Span= 0.00-48.00 hrs, dt= 0.01 hrs

Summary for Link DP-I: 127 May St

Inflow Area = 0.291 ac, 1.50% Impervious, Inflow Depth = 2.14" for 100-Year event
Inflow = 0.67 cfs @ 12.10 hrs, Volume= 0.052 af
Primary = 0.67 cfs @ 12.10 hrs, Volume= 0.052 af, Atten= 0%, Lag= 0.0 min

Primary outflow = Inflow, Time Span= 0.00-48.00 hrs, dt= 0.01 hrs

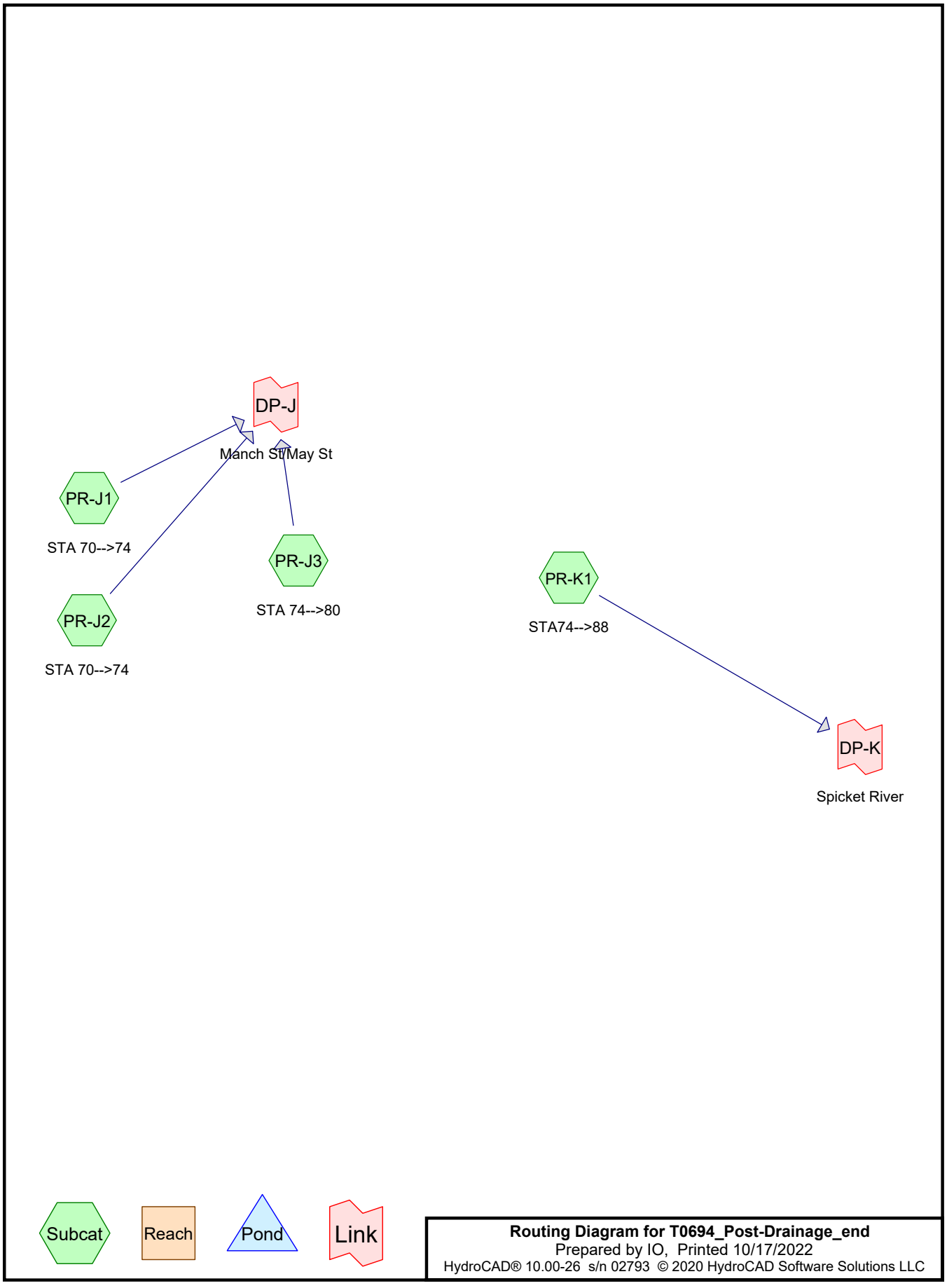
DP-J
Manch St/May St
PR-J1
STA 70-->74
PR-J2
STA 70-->74
PR-J3
STA 74-->80
PR-K1
STA74-->88
DP-K
Spicket River
Subcat
Reach
Pond
Link
Routing Diagram for T0694_Post-Drainage_end
Prepared by IO, Printed 10/17/2022
HydroCAD® 10.00-26 s/n 02793 © 2020 HydroCAD Software Solutions LLC

Area Listing (all nodes)

Area (acres)	CN	Description (subcatchment-numbers)
3.534	49	50-75% Grass cover, Fair, HSG A (PR-J1, PR-J2, PR-J3, PR-K1)
0.031	96	Gravel surface, HSG A (PR-K1)
0.815	98	Paved parking, HSG A (PR-J1, PR-J2, PR-J3, PR-K1)
4.381	**58**	**TOTAL AREA**

Summary for Subcatchment PR-J1: STA 70-->74

Runoff = 0.00 cfs @ 12.46 hrs, Volume= 0.001 af, Depth= 0.13"

Runoff by SCS TR-20 method, UH=SCS, Weighted-CN, Time Span= 0.00-48.00 hrs, dt= 0.01 hrs
Type III 24-hr 2-Year Rainfall=3.11"

Area (sf)	CN	Description
4,779	49	50-75% Grass cover, Fair, HSG A
153	98	Paved parking, HSG A
4,932	51	Weighted Average
4,779		96.90% Pervious Area
153		3.10% Impervious Area

Tc (min)	Length (feet)	Slope (ft/ft)	Velocity (ft/sec)	Capacity (cfs)	Description
6.0					**Direct Entry, Direct**

Summary for Subcatchment PR-J2: STA 70-->74

Runoff = 0.08 cfs @ 12.13 hrs, Volume= 0.010 af, Depth= 0.41"

Runoff by SCS TR-20 method, UH=SCS, Weighted-CN, Time Span= 0.00-48.00 hrs, dt= 0.01 hrs
Type III 24-hr 2-Year Rainfall=3.11"

Area (sf)	CN	Description
9,783	49	50-75% Grass cover, Fair, HSG A
3,128	98	Paved parking, HSG A
12,911	61	Weighted Average
9,783		75.77% Pervious Area
3,128		24.23% Impervious Area

Tc (min)	Length (feet)	Slope (ft/ft)	Velocity (ft/sec)	Capacity (cfs)	Description
6.0					**Direct Entry, Direct**

Summary for Subcatchment PR-J3: STA 74-->80

Runoff = 0.03 cfs @ 12.35 hrs, Volume= 0.007 af, Depth= 0.22"

Runoff by SCS TR-20 method, UH=SCS, Weighted-CN, Time Span= 0.00-48.00 hrs, dt= 0.01 hrs
Type III 24-hr 2-Year Rainfall=3.11"

Area (sf)	CN	Description
13,410	49	50-75% Grass cover, Fair, HSG A
1,950	98	Paved parking, HSG A
15,360	55	Weighted Average
13,410		87.30% Pervious Area
1,950		12.70% Impervious Area

Tc (min)	Length (feet)	Slope (ft/ft)	Velocity (ft/sec)	Capacity (cfs)	Description
6.0					**Direct Entry, Direct**

Summary for Subcatchment PR-K1: STA74-->88

Runoff = 0.69 cfs @ 12.14 hrs, Volume= 0.103 af, Depth= 0.34"

Runoff by SCS TR-20 method, UH=SCS, Weighted-CN, Time Span= 0.00-48.00 hrs, dt= 0.01 hrs
Type III 24-hr 2-Year Rainfall=3.11"

Area (sf)	CN	Description
125,977	49	50-75% Grass cover, Fair, HSG A
30,286	98	Paved parking, HSG A
1,356	96	Gravel surface, HSG A
157,619	59	Weighted Average
127,333		80.79% Pervious Area
30,286		19.21% Impervious Area

Tc (min)	Length (feet)	Slope (ft/ft)	Velocity (ft/sec)	Capacity (cfs)	Description
6.0					**Direct Entry, Direct**

Summary for Link DP-J: Manch St/May St

Inflow Area = 0.762 ac, 15.75% Impervious, Inflow Depth = 0.28" for 2-Year event
Inflow = 0.10 cfs @ 12.15 hrs, Volume= 0.018 af
Primary = 0.10 cfs @ 12.15 hrs, Volume= 0.018 af, Atten= 0%, Lag= 0.0 min

Primary outflow = Inflow, Time Span= 0.00-48.00 hrs, dt= 0.01 hrs

Summary for Link DP-K: Spicket River

Inflow Area = 3.618 ac, 19.21% Impervious, Inflow Depth = 0.34" for 2-Year event
Inflow = 0.69 cfs @ 12.14 hrs, Volume= 0.103 af
Primary = 0.69 cfs @ 12.14 hrs, Volume= 0.103 af, Atten= 0%, Lag= 0.0 min

Primary outflow = Inflow, Time Span= 0.00-48.00 hrs, dt= 0.01 hrs

Summary for Subcatchment PR-J1: STA 70-->74

Runoff = 0.06 cfs @ 12.12 hrs, Volume= 0.007 af, Depth= 0.72"

Runoff by SCS TR-20 method, UH=SCS, Weighted-CN, Time Span= 0.00-48.00 hrs, dt= 0.01 hrs
Type III 24-hr 10-Year Rainfall=4.93"

Area (sf)	CN	Description
4,779	49	50-75% Grass cover, Fair, HSG A
153	98	Paved parking, HSG A
4,932	51	Weighted Average
4,779		96.90% Pervious Area
153		3.10% Impervious Area

Tc (min)	Length (feet)	Slope (ft/ft)	Velocity (ft/sec)	Capacity (cfs)	Description
6.0					**Direct Entry, Direct**

Summary for Subcatchment PR-J2: STA 70-->74

Runoff = 0.42 cfs @ 12.10 hrs, Volume= 0.033 af, Depth= 1.33"

Runoff by SCS TR-20 method, UH=SCS, Weighted-CN, Time Span= 0.00-48.00 hrs, dt= 0.01 hrs
Type III 24-hr 10-Year Rainfall=4.93"

Area (sf)	CN	Description
9,783	49	50-75% Grass cover, Fair, HSG A
3,128	98	Paved parking, HSG A
12,911	61	Weighted Average
9,783		75.77% Pervious Area
3,128		24.23% Impervious Area

Tc (min)	Length (feet)	Slope (ft/ft)	Velocity (ft/sec)	Capacity (cfs)	Description
6.0					**Direct Entry, Direct**

Summary for Subcatchment PR-J3: STA 74-->80

Runoff = 0.31 cfs @ 12.11 hrs, Volume= 0.028 af, Depth= 0.95"

Runoff by SCS TR-20 method, UH=SCS, Weighted-CN, Time Span= 0.00-48.00 hrs, dt= 0.01 hrs
Type III 24-hr 10-Year Rainfall=4.93"

Area (sf)	CN	Description
13,410	49	50-75% Grass cover, Fair, HSG A
1,950	98	Paved parking, HSG A
15,360	55	Weighted Average
13,410		87.30% Pervious Area
1,950		12.70% Impervious Area

Tc (min)	Length (feet)	Slope (ft/ft)	Velocity (ft/sec)	Capacity (cfs)	Description
6.0					**Direct Entry, Direct**

Summary for Subcatchment PR-K1: STA74-->88

Runoff = 4.44 cfs @ 12.10 hrs, Volume= 0.360 af, Depth= 1.19"

Runoff by SCS TR-20 method, UH=SCS, Weighted-CN, Time Span= 0.00-48.00 hrs, dt= 0.01 hrs
Type III 24-hr 10-Year Rainfall=4.93"

Area (sf)	CN	Description
125,977	49	50-75% Grass cover, Fair, HSG A
30,286	98	Paved parking, HSG A
1,356	96	Gravel surface, HSG A
157,619	59	Weighted Average
127,333		80.79% Pervious Area
30,286		19.21% Impervious Area

Tc (min)	Length (feet)	Slope (ft/ft)	Velocity (ft/sec)	Capacity (cfs)	Description
6.0					**Direct Entry, Direct**

Summary for Link DP-J: Manch St/May St

Inflow Area = 0.762 ac, 15.75% Impervious, Inflow Depth = 1.06" for 10-Year event
Inflow = 0.79 cfs @ 12.10 hrs, Volume= 0.067 af
Primary = 0.79 cfs @ 12.10 hrs, Volume= 0.067 af, Atten= 0%, Lag= 0.0 min

Primary outflow = Inflow, Time Span= 0.00-48.00 hrs, dt= 0.01 hrs

Summary for Link DP-K: Spicket River

Inflow Area = 3.618 ac, 19.21% Impervious, Inflow Depth = 1.19" for 10-Year event
Inflow = 4.44 cfs @ 12.10 hrs, Volume= 0.360 af
Primary = 4.44 cfs @ 12.10 hrs, Volume= 0.360 af, Atten= 0%, Lag= 0.0 min

Primary outflow = Inflow, Time Span= 0.00-48.00 hrs, dt= 0.01 hrs

Summary for Subcatchment PR-J1: STA 70-->74

Runoff = 0.14 cfs @ 12.11 hrs, Volume= 0.012 af, Depth= 1.25"

Runoff by SCS TR-20 method, UH=SCS, Weighted-CN, Time Span= 0.00-48.00 hrs, dt= 0.01 hrs
Type III 24-hr 25-Year Rainfall=6.07"

Area (sf)	CN	Description
4,779	49	50-75% Grass cover, Fair, HSG A
153	98	Paved parking, HSG A
4,932	51	Weighted Average
4,779		96.90% Pervious Area
153		3.10% Impervious Area

Tc (min)	Length (feet)	Slope (ft/ft)	Velocity (ft/sec)	Capacity (cfs)	Description
6.0					**Direct Entry, Direct**

Summary for Subcatchment PR-J2: STA 70-->74

Runoff = 0.68 cfs @ 12.10 hrs, Volume= 0.051 af, Depth= 2.05"

Runoff by SCS TR-20 method, UH=SCS, Weighted-CN, Time Span= 0.00-48.00 hrs, dt= 0.01 hrs
Type III 24-hr 25-Year Rainfall=6.07"

Area (sf)	CN	Description
9,783	49	50-75% Grass cover, Fair, HSG A
3,128	98	Paved parking, HSG A
12,911	61	Weighted Average
9,783		75.77% Pervious Area
3,128		24.23% Impervious Area

Tc (min)	Length (feet)	Slope (ft/ft)	Velocity (ft/sec)	Capacity (cfs)	Description
6.0					**Direct Entry, Direct**

Summary for Subcatchment PR-J3: STA 74-->80

Runoff = 0.58 cfs @ 12.10 hrs, Volume= 0.046 af, Depth= 1.56"

Runoff by SCS TR-20 method, UH=SCS, Weighted-CN, Time Span= 0.00-48.00 hrs, dt= 0.01 hrs
Type III 24-hr 25-Year Rainfall=6.07"

Area (sf)	CN	Description
13,410	49	50-75% Grass cover, Fair, HSG A
1,950	98	Paved parking, HSG A
15,360	55	Weighted Average
13,410		87.30% Pervious Area
1,950		12.70% Impervious Area

Tc (min)	Length (feet)	Slope (ft/ft)	Velocity (ft/sec)	Capacity (cfs)	Description
6.0					**Direct Entry, Direct**

Summary for Subcatchment PR-K1: STA74-->88

Runoff = 7.50 cfs @ 12.10 hrs, Volume= 0.568 af, Depth= 1.88"

Runoff by SCS TR-20 method, UH=SCS, Weighted-CN, Time Span= 0.00-48.00 hrs, dt= 0.01 hrs
Type III 24-hr 25-Year Rainfall=6.07"

Area (sf)	CN	Description
125,977	49	50-75% Grass cover, Fair, HSG A
30,286	98	Paved parking, HSG A
1,356	96	Gravel surface, HSG A
157,619	59	Weighted Average
127,333		80.79% Pervious Area
30,286		19.21% Impervious Area

Tc (min)	Length (feet)	Slope (ft/ft)	Velocity (ft/sec)	Capacity (cfs)	Description
6.0					**Direct Entry, Direct**

Summary for Link DP-J: Manch St/May St

Inflow Area = 0.762 ac, 15.75% Impervious, Inflow Depth = 1.70" for 25-Year event
Inflow = 1.39 cfs @ 12.10 hrs, Volume= 0.108 af
Primary = 1.39 cfs @ 12.10 hrs, Volume= 0.108 af, Atten= 0%, Lag= 0.0 min

Primary outflow = Inflow, Time Span= 0.00-48.00 hrs, dt= 0.01 hrs

Summary for Link DP-K: Spicket River

Inflow Area = 3.618 ac, 19.21% Impervious, Inflow Depth = 1.88" for 25-Year event
Inflow = 7.50 cfs @ 12.10 hrs, Volume= 0.568 af
Primary = 7.50 cfs @ 12.10 hrs, Volume= 0.568 af, Atten= 0%, Lag= 0.0 min

Primary outflow = Inflow, Time Span= 0.00-48.00 hrs, dt= 0.01 hrs

Summary for Subcatchment PR-J1: STA 70-->74

Runoff = 0.27 cfs @ 12.10 hrs, Volume= 0.021 af, Depth= 2.24"

Runoff by SCS TR-20 method, UH=SCS, Weighted-CN, Time Span= 0.00-48.00 hrs, dt= 0.01 hrs
Type III 24-hr 100-Year Rainfall=7.82"

Area (sf)	CN	Description
4,779	49	50-75% Grass cover, Fair, HSG A
153	98	Paved parking, HSG A
4,932	51	Weighted Average
4,779		96.90% Pervious Area
153		3.10% Impervious Area

Tc (min)	Length (feet)	Slope (ft/ft)	Velocity (ft/sec)	Capacity (cfs)	Description
6.0					**Direct Entry, Direct**

Summary for Subcatchment PR-J2: STA 70-->74

Runoff = 1.13 cfs @ 12.09 hrs, Volume= 0.082 af, Depth= 3.31"

Runoff by SCS TR-20 method, UH=SCS, Weighted-CN, Time Span= 0.00-48.00 hrs, dt= 0.01 hrs
Type III 24-hr 100-Year Rainfall=7.82"

Area (sf)	CN	Description
9,783	49	50-75% Grass cover, Fair, HSG A
3,128	98	Paved parking, HSG A
12,911	61	Weighted Average
9,783		75.77% Pervious Area
3,128		24.23% Impervious Area

Tc (min)	Length (feet)	Slope (ft/ft)	Velocity (ft/sec)	Capacity (cfs)	Description
6.0					**Direct Entry, Direct**

Summary for Subcatchment PR-J3: STA 74-->80

Runoff = 1.05 cfs @ 12.09 hrs, Volume= 0.078 af, Depth= 2.66"

Runoff by SCS TR-20 method, UH=SCS, Weighted-CN, Time Span= 0.00-48.00 hrs, dt= 0.01 hrs
Type III 24-hr 100-Year Rainfall=7.82"

Area (sf)	CN	Description
13,410	49	50-75% Grass cover, Fair, HSG A
1,950	98	Paved parking, HSG A
15,360	55	Weighted Average
13,410		87.30% Pervious Area
1,950		12.70% Impervious Area

Tc (min)	Length (feet)	Slope (ft/ft)	Velocity (ft/sec)	Capacity (cfs)	Description
6.0					**Direct Entry, Direct**

Summary for Subcatchment PR-K1: STA74-->88

Runoff = 12.84 cfs @ 12.09 hrs, Volume= 0.932 af, Depth= 3.09"

Runoff by SCS TR-20 method, UH=SCS, Weighted-CN, Time Span= 0.00-48.00 hrs, dt= 0.01 hrs
Type III 24-hr 100-Year Rainfall=7.82"

Area (sf)	CN	Description
125,977	49	50-75% Grass cover, Fair, HSG A
30,286	98	Paved parking, HSG A
1,356	96	Gravel surface, HSG A
157,619	59	Weighted Average
127,333		80.79% Pervious Area
30,286		19.21% Impervious Area

Tc (min)	Length (feet)	Slope (ft/ft)	Velocity (ft/sec)	Capacity (cfs)	Description
6.0					**Direct Entry, Direct**

Summary for Link DP-J: Manch St/May St

Inflow Area = 0.762 ac, 15.75% Impervious, Inflow Depth = 2.85" for 100-Year event
Inflow = 2.46 cfs @ 12.09 hrs, Volume= 0.181 af
Primary = 2.46 cfs @ 12.09 hrs, Volume= 0.181 af, Atten= 0%, Lag= 0.0 min

Primary outflow = Inflow, Time Span= 0.00-48.00 hrs, dt= 0.01 hrs

Summary for Link DP-K: Spicket River

Inflow Area = 3.618 ac, 19.21% Impervious, Inflow Depth = 3.09" for 100-Year event
Inflow = 12.84 cfs @ 12.09 hrs, Volume= 0.932 af
Primary = 12.84 cfs @ 12.09 hrs, Volume= 0.932 af, Atten= 0%, Lag= 0.0 min

Primary outflow = Inflow, Time Span= 0.00-48.00 hrs, dt= 0.01 hrs

Basin 2P (Infiltration Basin)

Bottom of basin elevation = 49.75'
Groundwater Depth estimated (Test Pit 5) = 47.00'
Groundwater Depth with mound = 47+2.3 = 49.3'

This spreadsheet will calculate the height of a groundwater mound beneath a stormwater infiltration basin. More information can be found in the U.S. Geological Survey Scientific Investigations Report 2010-5102 "Simulation of groundwater mounding beneath hypothetical stormwater infiltration basins".

The user must specify infiltration rate (R), specific yield (Sy), horizontal hydraulic conductivity (Kh), basin dimensions (x, y), duration of infiltration period (t), and the initial thickness of the saturated zone (hi(0), height of the water table if the bottom of the aquifer is the datum). For a square basin the half width equals the half length (x = y). For a rectangular basin, if the user wants the water-table changes perpendicular to the long side, specify x as the short dimension and y as the long dimension. Conversely, if the user wants the values perpendicular to the short side, specify y as the short dimension, x as the long dimension. All distances are from the center of the basin. Users can change the distances from the center of the basin at which water-table aquifer thickness are calculated.
Cells highlighted in yellow are values that can be changed by the user. Cells highlighted in red are output values based on user-specified inputs. The user MUST click the blue "Re-Calculate Now" button each time ANY of the user-specified inputs are changed otherwise necessary iterations to converge on the correct solution will not be done and values shown will be incorrect. Use consistent units for all input values (for example, feet and days)

use consistent units (e.g. feet & days **or** inches & hours)

Input Values		
25.7000	*R*	**Recharge (infiltration) rate (feet/day)**
0.260	Sy	**Specific yield, Sy (dimensionless, between 0 and 1)**
257.00	K	**Horizontal hydraulic conductivity, Kh (feet/day)***
12.500	x	**1/2 length of basin (x direction, in feet)**
153.000	y	**1/2 width of basin (y direction, in feet)**
0.103	t	**duration of infiltration period (days)**
30.000	hi(0)	**initial thickness of saturated zone (feet)**

Conversion Table

inch/hour	feet/day
0.67	1.33
2.00	4.00

hours	days
36	1.50

In the report accompanying this spreadsheet (USGS SIR 2010-5102), vertical soil permeability (ft/d) is assumed to be one-tenth horizontal hydraulic conductivity (ft/d).

32.289	h(max)	**maximum thickness of saturated zone (beneath center of basin at end of infiltration period)**
2.289	Δh(max)	**maximum groundwater mounding (beneath center of basin at end of infiltration period)**

Ground-water Mounding, in feet	Distance from center of basin in x direction, in feet
2.289	0
1.826	20
1.258	40
1.027	50
0.828	60
0.661	70
0.521	80
0.406	90
0.312	100
0.179	120

Re-Calculate Now

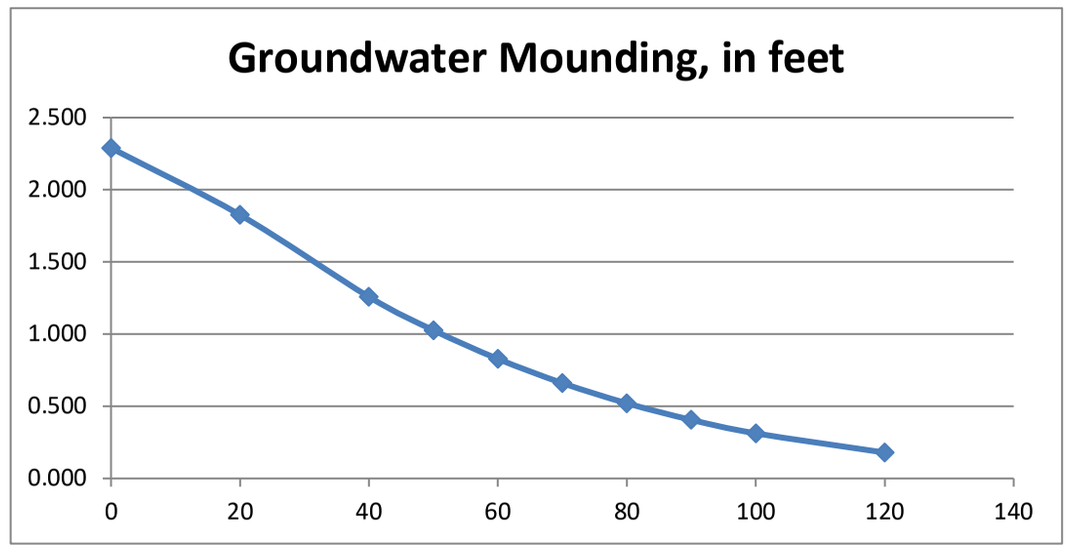

Disclaimer

This spreadsheet solving the Hantush (1967) equation for ground-water mounding beneath an infiltration basin is made available to the general public as a convenience for those wishing to replicate values documented in the USGS Scientific Investigations Report 2010-5102 "Groundwater mounding beneath hypothetical stormwater infiltration basins" or to calculate values based on user-specified site conditions. Any changes made to the spreadsheet (other than values identified as user-specified) after transmission from the USGS could have unintended, undesirable consequences. These consequences could include, but may not be limited to: erroneous output, numerical instabilities, and violations of underlying assumptions that are inherent in results presented in the accompanying USGS published report. The USGS assumes no responsibility for the consequences of any changes made to the spreadsheet. If changes are made to the spreadsheet, the user is responsible for documenting the changes and justifying the results and conclusions.

A00860 - 373

Proposal No. 608930-128034

Basin 4P (Bioretention Area)

Bottom of basin elevation = 59.50'
6" perforated underdrain elevation = 56.25
Groundwater Depth estimated (Test Pit 3) = 53.50'
Groundwater Depth with mound = 53.5+0.91 = 54.41'

This spreadsheet will calculate the height of a groundwater mound beneath a stormwater infiltration basin. More information can be found in the U.S. Geological Survey Scientific Investigations Report 2010-5102 "Simulation of groundwater mounding beneath hypothetical stormwater infiltration basins".

The user must specify infiltration rate (R), specific yield (Sy), horizontal hydraulic conductivity (Kh), basin dimensions (x, y), duration of infiltration period (t), and the initial thickness of the saturated zone (hi(0), height of the water table if the bottom of the aquifer is the datum). For a square basin the half width equals the half length (x = y). For a rectangular basin, if the user wants the water-table changes perpendicular to the long side, specify x as the short dimension and y as the long dimension. Conversely, if the user wants the values perpendicular to the short side, specify y as the short dimension, x as the long dimension. All distances are from the center of the basin. Users can change the distances from the center of the basin at which water-table aquifer thickness are calculated.
Cells highlighted in yellow are values that can be changed by the user. Cells highlighted in red are output values based on user-specified inputs. The user MUST click the blue "Re-Calculate Now" button each time ANY of the user-specified inputs are changed otherwise necessary iterations to converge on the correct solution will not be done and values shown will be incorrect. Use consistent units for all input values (for example, feet and days)

use consistent units (e.g. feet & days **or** inches & hours)

Conversion Table

inch/hour	feet/day
0.67	1.33
2.00	4.00

hours	days
36	1.50

In the report accompanying this spreadsheet (USGS SIR 2010-5102), vertical soil permeability (ft/d) is assumed to be one-tenth horizontal hydraulic conductivity (ft/d).

Input Values		
3.8000	*R*	**Recharge (infiltration) rate (feet/day)**
0.260	Sy	**Specific yield, Sy (dimensionless, between 0 and 1)**
38.00	K	**Horizontal hydraulic conductivity, Kh (feet/day)***
5.250	x	**1/2 length of basin (x direction, in feet)**
47.500	y	**1/2 width of basin (y direction, in feet)**
1.160	t	**duration of infiltration period (days)**
30.000	hi(0)	**initial thickness of saturated zone (feet)**

30.913	h(max)	**maximum thickness of saturated zone (beneath center of basin at end of infiltration period)**
0.913	Δh(max)	**maximum groundwater mounding (beneath center of basin at end of infiltration period)**

Ground-water Mounding, in feet	Distance from center of basin in x direction, in feet
0.913	0
0.671	20
0.463	40
0.384	50
0.318	60
0.262	70
0.216	80
0.178	90
0.146	100
0.097	120

Re-Calculate Now

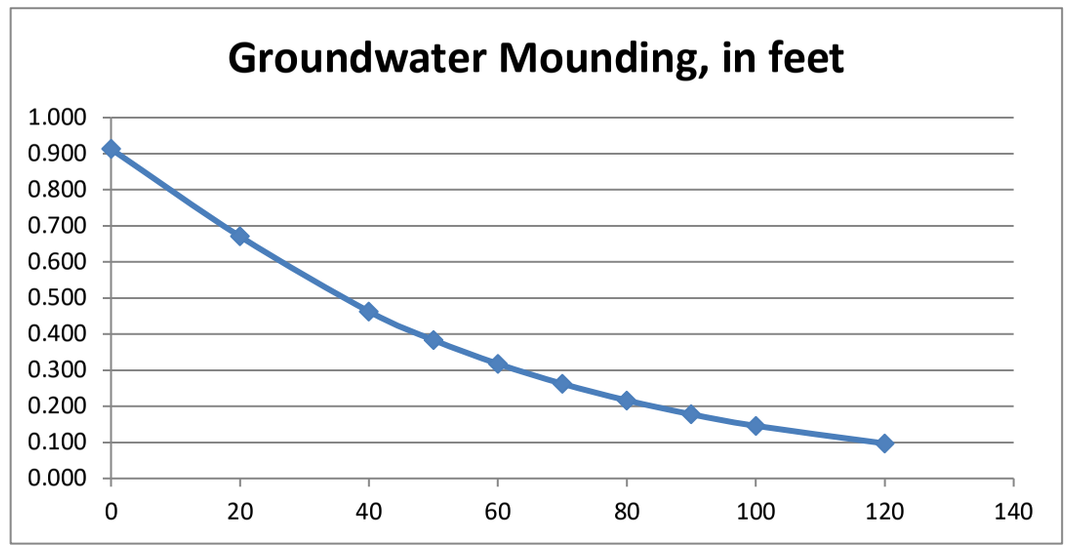

Disclaimer

This spreadsheet solving the Hantush (1967) equation for ground-water mounding beneath an infiltration basin is made available to the general public as a convenience for those wishing to replicate values documented in the USGS Scientific Investigations Report 2010-5102 "Groundwater mounding beneath hypothetical stormwater infiltration basins" or to calculate values based on user-specified site conditions. Any changes made to the spreadsheet (other than values identified as user-specified) after transmission from the USGS could have unintended, undesirable consequences. These consequences could include, but may not be limited to: erroneous output, numerical instabilities, and violations of underlying assumptions that are inherent in results presented in the accompanying USGS published report. The USGS assumes no responsibility for the consequences of any changes made to the spreadsheet. If changes are made to the spreadsheet, the user is responsible for documenting the changes and justifying the results and conclusions.

A00860 - 374

Proposal No. 608930-128034

Basin 7P (Bioretention Area)

Bottom of basin elevation = 65.00'
6" perforated underdrain elevation = 61.75
Groundwater Depth estimated (Test Pit 2) = 58.50'
Groundwater Depth with mound = 58.5+1.0 = 59.5'

This spreadsheet will calculate the height of a groundwater mound beneath a stormwater infiltration basin. More information can be found in the U.S. Geological Survey Scientific Investigations Report 2010-5102 "Simulation of groundwater mounding beneath hypothetical stormwater infiltration basins".

The user must specify infiltration rate (R), specific yield (Sy), horizontal hydraulic conductivity (Kh), basin dimensions (x, y), duration of infiltration period (t), and the initial thickness of the saturated zone (hi(0), height of the water table if the bottom of the aquifer is the datum). For a square basin the half width equals the half length (x = y). For a rectangular basin, if the user wants the water-table changes perpendicular to the long side, specify x as the short dimension and y as the long dimension. Conversely, if the user wants the values perpendicular to the short side, specify y as the short dimension, x as the long dimension. All distances are from the center of the basin. Users can change the distances from the center of the basin at which water-table aquifer thickness are calculated.
Cells highlighted in yellow are values that can be changed by the user. Cells highlighted in red are output values based on user-specified inputs. The user MUST click the blue "Re-Calculate Now" button each time ANY of the user-specified inputs are changed otherwise necessary iterations to converge on the correct solution will not be done and values shown will be incorrect. Use consistent units for all input values (for example, feet and days)

use consistent units (e.g. feet & days **or** inches & hours)

Input Values		
6.2000	*R*	**Recharge (infiltration) rate (feet/day)**
0.260	Sy	**Specific yield, Sy (dimensionless, between 0 and 1)**
62.00	K	**Horizontal hydraulic conductivity, Kh (feet/day)***
7.000	x	**1/2 length of basin (x direction, in feet)**
154.000	y	**1/2 width of basin (y direction, in feet)**
0.236	t	**duration of infiltration period (days)**
30.000	hi(0)	**initial thickness of saturated zone (feet)**

Conversion Table

inch/hour	feet/day
0.67	1.33
2.00	4.00

hours	days
36	1.50

In the report accompanying this spreadsheet (USGS SIR 2010-5102), vertical soil permeability (ft/d) is assumed to be one-tenth horizontal hydraulic conductivity (ft/d).

30.994	h(max)	**maximum thickness of saturated zone (beneath center of basin at end of infiltration period)**
0.994	Δh(max)	**maximum groundwater mounding (beneath center of basin at end of infiltration period)**

Ground-water Mounding, in feet	Distance from center of basin in x direction, in feet
0.994	0
0.680	20
0.399	40
0.296	50
0.216	60
0.154	70
0.107	80
0.074	90
0.050	100
0.021	120

Re-Calculate Now

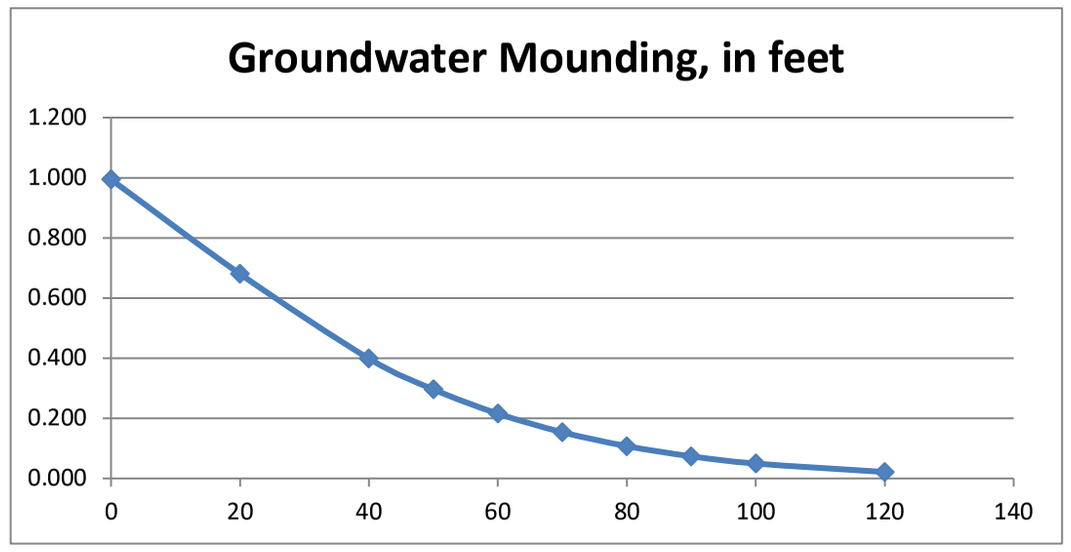

Disclaimer

This spreadsheet solving the Hantush (1967) equation for ground-water mounding beneath an infiltration basin is made available to the general public as a convenience for those wishing to replicate values documented in the USGS Scientific Investigations Report 2010-5102 "Groundwater mounding beneath hypothetical stormwater infiltration basins" or to calculate values based on user-specified site conditions. Any changes made to the spreadsheet (other than values identified as user-specified) after transmission from the USGS could have unintended, undesirable consequences. These consequences could include, but may not be limited to: erroneous output, numerical instabilities, and violations of underlying assumptions that are inherent in results presented in the accompanying USGS published report. The USGS assumes no responsibility for the consequences of any changes made to the spreadsheet. If changes are made to the spreadsheet, the user is responsible for documenting the changes and justifying the results and conclusions.

A00860 - 375

Proposal No. 608930-128034

Basin 8P (Bioretention Area)

Bottom of basin elevation = 72.75'
6" perforated underdrain elevation = 69.5'
Groundwater Depth estimated (Test Pit 1) = 65.80'
Groundwater Depth with mound = 65.8+0.93 = 66.73'

This spreadsheet will calculate the height of a groundwater mound beneath a stormwater infiltration basin. More information can be found in the U.S. Geological Survey Scientific Investigations Report 2010-5102 "Simulation of groundwater mounding beneath hypothetical stormwater infiltration basins".

The user must specify infiltration rate (R), specific yield (Sy), horizontal hydraulic conductivity (Kh), basin dimensions (x, y), duration of infiltration period (t), and the initial thickness of the saturated zone (hi(0), height of the water table if the bottom of the aquifer is the datum). For a square basin the half width equals the half length (x = y). For a rectangular basin, if the user wants the water-table changes perpendicular to the long side, specify x as the short dimension and y as the long dimension. Conversely, if the user wants the values perpendicular to the short side, specify y as the short dimension, x as the long dimension. All distances are from the center of the basin. Users can change the distances from the center of the basin at which water-table aquifer thickness are calculated.
Cells highlighted in yellow are values that can be changed by the user. Cells highlighted in red are output values based on user-specified inputs. The user MUST click the blue "Re-Calculate Now" button each time ANY of the user-specified inputs are changed otherwise necessary iterations to converge on the correct solution will not be done and values shown will be incorrect. Use consistent units for all input values (for example, feet and days)

use consistent units (e.g. feet & days **or** inches & hours)

Input Values		
2.4000	*R*	**Recharge (infiltration) rate (feet/day)**
0.260	Sy	**Specific yield, Sy (dimensionless, between 0 and 1)**
24.00	K	**Horizontal hydraulic conductivity, Kh (feet/day)***
4.500	x	**1/2 length of basin (x direction, in feet)**
70.500	y	**1/2 width of basin (y direction, in feet)**
1.780	t	**duration of infiltration period (days)**
30.000	hi(0)	**initial thickness of saturated zone (feet)**

Conversion Table

inch/hour	feet/day
0.67	1.33
2.00	4.00

hours	days
36	1.50

In the report accompanying this spreadsheet (USGS SIR 2010-5102), vertical soil permeability (ft/d) is assumed to be one-tenth horizontal hydraulic conductivity (ft/d).

30.927	h(max)	**maximum thickness of saturated zone (beneath center of basin at end of infiltration period)**
0.927	Δh(max)	**maximum groundwater mounding (beneath center of basin at end of infiltration period)**

Ground-water Mounding, in feet	Distance from center of basin in x direction, in feet
0.927	0
0.705	20
0.503	40
0.422	50
0.352	60
0.293	70
0.242	80
0.200	90
0.164	100
0.109	120

Re-Calculate Now

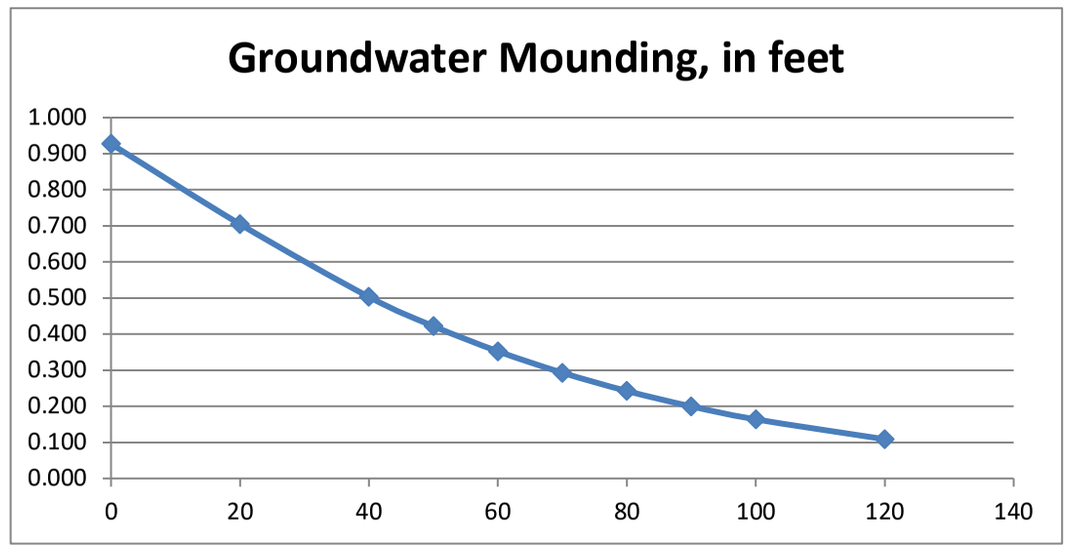

Disclaimer

This spreadsheet solving the Hantush (1967) equation for ground-water mounding beneath an infiltration basin is made available to the general public as a convenience for those wishing to replicate values documented in the USGS Scientific Investigations Report 2010-5102 "Groundwater mounding beneath hypothetical stormwater infiltration basins" or to calculate values based on user-specified site conditions. Any changes made to the spreadsheet (other than values identified as user-specified) after transmission from the USGS could have unintended, undesirable consequences. These consequences could include, but may not be limited to: erroneous output, numerical instabilities, and violations of underlying assumptions that are inherent in results presented in the accompanying USGS published report. The USGS assumes no responsibility for the consequences of any changes made to the spreadsheet. If changes are made to the spreadsheet, the user is responsible for documenting the changes and justifying the results and conclusions.

A00860 - 376

Proposal No. 608930-128034

B

Water Quality Data

INSTRUCTIONS:
1. In BMP Column, click on Blue Cell to Activate Drop Down Menu
2. Select BMP from Drop Down Menu
3. After BMP is selected, TSS Removal and other Columns are automatically completed.

Version 1, Automated: Mar. 4, 2008

Location: Basins 1P, 3P, 4P, 5P, 6P, 7P, 8P

TSS Removal Calculation Worksheet

B BMP[1]	C TSS Removal Rate[1]	D Starting TSS Load*	E Amount Removed (C*D)	F Remaining Load (D-E)
Bioretention Area	**0.90**	**1.00**	**0.90**	**0.10**
	0.00	**0.10**	**0.00**	**0.10**
	0.00	**0.10**	**0.00**	**0.10**
	0.00	**0.10**	**0.00**	**0.10**
	0.00	**0.10**	**0.00**	**0.10**

Total TSS Removal = **90%**

Separate Form Needs to be Completed for Each Outlet or BMP Train

Project: **LMRC Rail Trail**
Prepared By: **TEC, Inc.**
Date: **10-19-2022**

*Equals remaining load from previous BMP (E) which enters the BMP

Non-automated TSS Calculation Sheet must be used if Proprietary BMP Proposed
1. From MassDEP Stormwater Handbook Vol. 1

INSTRUCTIONS:
1. In BMP Column, click on Blue Cell to Activate Drop Down Menu
2. Select BMP from Drop Down Menu
3. After BMP is selected, TSS Removal and other Columns are automatically completed.

Version 1, Automated: Mar. 4, 2008

Location: Basin 2P

TSS Removal Calculation Worksheet

B BMP[1]	C TSS Removal Rate[1]	D Starting TSS Load*	E Amount Removed (C*D)	F Remaining Load (D-E)
Infiltration Basin	**0.80**	**1.00**	**0.80**	**0.20**
	0.00	**0.20**	**0.00**	**0.20**
	0.00	**0.20**	**0.00**	**0.20**
	0.00	**0.20**	**0.00**	**0.20**
	0.00	**0.20**	**0.00**	**0.20**

Total TSS Removal = **80%**

Separate Form Needs to be Completed for Each Outlet or BMP Train

Project: **LMRC Rail Trail**
Prepared By: **TEC, Inc.**
Date: **10-19-2022**

*Equals remaining load from previous BMP (E) which enters the BMP

Non-automated TSS Calculation Sheet must be used if Proprietary BMP Proposed
1. From MassDEP Stormwater Handbook Vol. 1

T0694_Post-Drainage_basin areas *Type III 24-hr 10-Year Rainfall=4.93"*
Prepared by IO Printed 10/17/2022
HydroCAD® 10.00-26 s/n 02793 © 2020 HydroCAD Software Solutions LLC

Stage-Area-Storage for Pond 1P: STA 30

Elevation (feet)	Surface (sq-ft)	Wetted (sq-ft)	Storage (cubic-feet)	
49.50	975	975	0	
49.55	1,023	1,180	50	
49.60	1,072	1,388	102	
49.65	1,122	1,597	157	
49.70	1,173	1,809	215	
49.75	1,226	2,023	274	
49.80	1,279	2,238	337	
49.85	1,334	2,456	402	
49.90	1,390	2,677	470	
49.95	1,447	2,899	541	
50.00	1,505	3,123	615	
50.05	1,564	3,350	692	
50.10	1,624	3,578	772	
50.15	1,686	3,809	854	
50.20	1,749	4,042	940	
50.25	1,813	4,277	1,029	
50.30	1,878	4,514	1,121	
50.35	1,944	4,754	1,217	
50.40	2,011	4,995	1,316	← Lowest Outlet
50.45	2,079	5,239	1,418	
50.50	2,149	5,484	1,524	
50.55	2,207	5,577	1,633	
50.60	2,267	5,669	1,745	
50.65	2,327	5,762	1,859	
50.70	2,388	5,855	1,977	
50.75	2,449	5,948	2,098	
50.80	2,511	6,042	2,222	
50.85	2,575	6,136	2,349	
50.90	2,639	6,230	2,480	
50.95	2,703	6,325	2,613	
51.00	2,769	6,419	2,750	
51.05	2,835	6,514	2,890	
51.10	2,902	6,610	3,034	
51.15	2,970	6,705	3,180	
51.20	3,039	6,801	3,331	
51.25	3,108	6,898	3,484	
51.30	3,178	6,994	3,641	
51.35	3,249	7,091	3,802	
51.40	3,321	7,188	3,966	
51.45	3,394	7,286	4,134	
51.50	3,467	7,383	4,306	
51.55	3,532	7,454	4,481	
51.60	3,599	7,525	4,659	
51.65	3,665	7,597	4,841	
51.70	3,732	7,668	5,025	
51.75	3,800	7,740	5,214	
51.80	3,869	7,812	5,406	
51.85	3,938	7,883	5,601	
51.90	4,008	7,956	5,799	
51.95	4,078	8,028	6,001	
52.00	**4,149**	**8,100**	**6,207**	

T0694_Post-Drainage_basin areas *Type III 24-hr 10-Year Rainfall=4.93"*
Prepared by IO Printed 10/17/2022
HydroCAD® 10.00-26 s/n 02793 © 2020 HydroCAD Software Solutions LLC

Stage-Area-Storage for Pond 6P: STA 30

Elevation (feet)	Surface (sq-ft)	Wetted (sq-ft)	Storage (cubic-feet)
63.50	75	75	0
63.55	85	96	4
63.60	96	118	9
63.65	107	139	14
63.70	120	162	19
63.75	132	184	26
63.80	146	207	33
63.85	160	230	40
63.90	174	253	49
63.95	190	277	58
64.00	206	301	67
64.05	222	325	78
64.10	240	350	90
64.15	258	375	102
64.20	276	400	115
64.25	295	426	130
64.30	315	452	145
64.35	336	478	161
64.40	357	505	179
64.45	379	532	197
64.50	401	559	216
64.55	418	578	237
64.60	436	597	258
64.65	453	616	281
64.70	472	636	304
64.75	490	655	328
64.80	509	675	353
64.85	528	695	379
64.90	548	715	405
64.95	568	735	433
65.00	588	755	462
65.05	685	854	494
65.10	**789**	**956**	**531**

T0694_Post-Drainage_basin areas *Type III 24-hr 100-Year Rainfall=7.82"*
Prepared by TEC, Inc. Printed 10/19/2022
HydroCAD® 10.00-25 s/n 02793 © 2019 HydroCAD Software Solutions LLC

Stage-Area-Storage for Pond 2ESF: Southeast Sediment Forebay

Elevation (feet)	Surface (sq-ft)	Storage (cubic-feet)
49.75	35	0
49.76	36	0
49.77	36	1
49.78	37	1
49.79	38	1
49.80	38	2
49.81	39	2
49.82	40	3
49.83	40	3
49.84	41	3
49.85	42	4
49.86	42	4
49.87	43	5
49.88	44	5
49.89	44	6
49.90	45	6
49.91	46	6
49.92	47	7
49.93	47	7
49.94	48	8
49.95	49	8
49.96	50	9
49.97	50	9
49.98	51	10
49.99	52	10
50.00	53	11
50.01	53	11
50.02	54	12
50.03	55	12
50.04	56	13
50.05	57	14
50.06	57	14
50.07	58	15
50.08	59	15
50.09	60	16
50.10	61	17
50.11	62	17
50.12	62	18
50.13	63	18
50.14	64	19
50.15	65	20
50.16	66	20
50.17	67	21
50.18	68	22
50.19	68	22
50.20	69	23
50.21	70	24
50.22	71	24
50.23	72	25
50.24	73	26
50.25	74	27
50.26	75	27
50.27	76	28

Elevation (feet)	Surface (sq-ft)	Storage (cubic-feet)
50.28	77	29
50.29	78	30
50.30	79	30
50.31	79	31
50.32	80	32
50.33	81	33
50.34	82	34
50.35	83	34
50.36	84	35
50.37	85	36
50.38	86	37
50.39	87	38
50.40	88	39
50.41	89	40
50.42	90	41
50.43	91	41
50.44	92	42
50.45	93	43
50.46	94	44
50.47	95	45
50.48	97	46
50.49	98	47
50.50	99	48
50.51	100	49
50.52	101	50
50.53	102	51
50.54	103	52
50.55	104	53
50.56	105	54
50.57	106	55
50.58	107	56
50.59	108	57
50.60	110	58
50.61	111	60
50.62	112	61
50.63	113	62
50.64	114	63
50.65	115	64
50.66	116	65
50.67	118	66
50.68	119	68
50.69	120	69
50.70	121	70
50.71	122	71
50.72	123	72
50.73	125	74
50.74	126	75
50.75	**127**	**76**

Available Storage

T0694_Post-Drainage_basin areas *Type III 24-hr 100-Year Rainfall=7.82"*
Prepared by TEC, Inc. Printed 10/19/2022
HydroCAD® 10.00-25 s/n 02793 © 2019 HydroCAD Software Solutions LLC

Stage-Area-Storage for Pond 2WSF: Northwest Sediment Forebay

Elevation (feet)	Surface (sq-ft)	Storage (cubic-feet)
49.75	108	0
49.76	109	1
49.77	110	2
49.78	112	3
49.79	113	4
49.80	114	6
49.81	115	7
49.82	117	8
49.83	118	9
49.84	119	10
49.85	120	11
49.86	122	13
49.87	123	14
49.88	124	15
49.89	126	16
49.90	127	18
49.91	128	19
49.92	130	20
49.93	131	21
49.94	132	23
49.95	134	24
49.96	135	25
49.97	136	27
49.98	138	28
49.99	139	30
50.00	140	31
50.01	142	32
50.02	143	34
50.03	145	35
50.04	146	37
50.05	147	38
50.06	149	40
50.07	150	41
50.08	152	43
50.09	153	44
50.10	155	46
50.11	156	47
50.12	157	49
50.13	159	50
50.14	160	52
50.15	162	54
50.16	163	55
50.17	165	57
50.18	166	59
50.19	168	60
50.20	169	62
50.21	171	64
50.22	172	65
50.23	174	67
50.24	175	69
50.25	177	71
50.26	179	72
50.27	180	74
50.28	182	76
50.29	183	78
50.30	185	80
50.31	186	81
50.32	188	83
50.33	190	85
50.34	191	87
50.35	193	89
50.36	194	91
50.37	196	93
50.38	198	95
50.39	199	97
50.40	201	99
50.41	203	101
50.42	204	103
50.43	206	105
50.44	208	107
50.45	209	109
50.46	211	111
50.47	213	113
50.48	214	115
50.49	216	118
50.50	218	120
50.51	220	122
50.52	221	124
50.53	223	126
50.54	225	129
50.55	227	131
50.56	228	133
50.57	230	135
50.58	232	138
50.59	234	140
50.60	235	142
50.61	237	145
50.62	239	147
50.63	241	150
50.64	243	152
50.65	244	154
50.66	246	157
50.67	248	159
50.68	250	162
50.69	252	164
50.70	254	167
50.71	255	169
50.72	257	172
50.73	259	175
50.74	261	177
50.75	**263**	**180**

Available Storage

Riprap Apron Sizing Computation – LMRC Basin 4P Culvert

Sizing calculations based on guidance from Federal Highway Administration Hydraulic Engineering Circular No. 14, 3rd edition, dated July 2006

By: TEC, Inc. 10/19/2022

$$D_{50} = 0.2D\left(\frac{Q}{\sqrt{gD^{2.5}}}\right)^{4/3}\left(\frac{D}{TW}\right)$$

$$D_{50} = riprap\ size\ (ft)$$

$$Q = design\ discharge\ \left(\frac{ft^3}{s}\right)$$

$$D = culvert\ diameter\ (ft)$$

$$TW = tailwater\ depth\ (ft)$$

$$g = acceleration\ due\ to\ gravity\ \left(32.2\ \frac{ft}{s^2}\right)$$

Table 10.1. Example Riprap Classes and Apron Dimensions

Class	D_{50} (mm)	D_{50} (in)	Apron Length[1]	Apron Depth
1	125	5	4D	$3.5D_{50}$
2	150	6	4D	$3.3D_{50}$
3	250	10	5D	$2.4D_{50}$
4	350	14	6D	$2.2D_{50}$
5	500	20	7D	$2.0D_{50}$
6	550	22	8D	$2.0D_{50}$

[1]D is the culvert rise.

Proposed FES 9

$$D_{50} = 0.2(1.0\ ft)\left(\frac{0.55\ \frac{ft^3}{s}}{\sqrt{(32.2\ \frac{ft}{s^2})(1.0ft)^{2.5}}}\right)^{4/3}\left(\frac{1.0ft}{0.4(1.0ft)}\right) = 0.02\ ft = 0.3\ inches$$

$$= Class\ 1\ (Table\ 10.1)$$

$$Length = 4D = 4(1.0\ ft) = 4\ ft$$

$$Depth = 3.5(D_{50}) = 3.5\ (5\ in) = 17.5\ inches$$

Note: Design flow from HydroCAD was estimated to be 0.55 cfs (inflow to Basin 4, during a 10-year storm). Based on this low flow rate, the culvert has been designed with the minimum recommended length and depth of rip rap apron.

Riprap Apron Sizing Computation – LMRC Basin 5A and 5B Culvert

Sizing calculations based on guidance from Federal Highway Administration Hydraulic Engineering Circular No. 14, 3rd edition, dated July 2006

By: TEC, Inc. 10/19/2022

$$D_{50} = 0.2D\left(\frac{Q}{\sqrt{gD^{2.5}}}\right)^{4/3}\left(\frac{D}{TW}\right)$$

$$D_{50} = riprap\ size\ (ft)$$

$$Q = design\ discharge\ \left(\frac{ft^3}{s}\right)$$

$$D = culvert\ diameter\ (ft)$$

$$TW = tailwater\ depth\ (ft)$$

$$g = acceleration\ due\ to\ gravity\ \left(32.2\ \frac{ft}{s^2}\right)$$

Table 10.1. Example Riprap Classes and Apron Dimensions

Class	D_{50} (mm)	D_{50} (in)	Apron Length[1]	Apron Depth
1	125	5	4D	$3.5D_{50}$
2	150	6	4D	$3.3D_{50}$
3	250	10	5D	$2.4D_{50}$
4	350	14	6D	$2.2D_{50}$
5	500	20	7D	$2.0D_{50}$
6	550	22	8D	$2.0D_{50}$

[1]D is the culvert rise.

Proposed FES 11 & 12

$$D_{50} = 0.2(1.0\ ft)\left(\frac{1.01\ \frac{ft^3}{s}}{\sqrt{(32.2\ \frac{ft}{s^2})(1.0ft)^{2.5}}}\right)^{4/3}\left(\frac{1.0ft}{0.4(1.0ft)}\right) = 0.05\ ft = 0.6\ inches$$

$$= Class\ 1\ (Table\ 10.1)$$

$$Length = 4D = 4(1.0\ ft) = 4\ ft$$

$$Depth = 3.5(D_{50}) = 3.5\ (5\ in) = 17.5\ inches$$

Note: Design flow from HydroCAD was estimated to be 1.01 cfs (flow to Basin 5, during a 10-year storm). Based on this low flow rate, the culvert has been designed with the minimum recommended length and depth of rip rap apron.

Riprap Apron Sizing Computation – LMRC Culvert from Basin 6 to Basin 5

Sizing calculations based on guidance from Federal Highway Administration Hydraulic Engineering Circular No. 14, 3rd edition, dated July 2006

By: TEC, Inc. 10/19/2022

$$D_{50} = 0.2D\left(\frac{Q}{\sqrt{gD^{2.5}}}\right)^{4/3}\left(\frac{D}{TW}\right)$$

$$D_{50} = riprap\ size\ (ft)$$

$$Q = design\ discharge\ \left(\frac{ft^3}{s}\right)$$

$$D = culvert\ diameter\ (ft)$$

$$TW = tailwater\ depth\ (ft)$$

$$g = acceleration\ due\ to\ gravity\ \left(32.2\ \frac{ft}{s^2}\right)$$

Table 10.1. Example Riprap Classes and Apron Dimensions

Class	D_{50} (mm)	D_{50} (in)	Apron Length[1]	Apron Depth
1	125	5	4D	$3.5D_{50}$
2	150	6	4D	$3.3D_{50}$
3	250	10	5D	$2.4D_{50}$
4	350	14	6D	$2.2D_{50}$
5	500	20	7D	$2.0D_{50}$
6	550	22	8D	$2.0D_{50}$

[1]D is the culvert rise.

Proposed FES 13

$$D_{50} = 0.2(1.0\ ft)\left(\frac{0.31\ \frac{ft^3}{s}}{\sqrt{(32.2\ \frac{ft}{s^2})(1.0ft)^{2.5}}}\right)^{4/3}\left(\frac{1.0ft}{0.4(1.0ft)}\right) = 0.01\ ft = 0.1 inches$$

$$= Class\ 1\ (Table\ 10.1)$$

$$Length = 4D = 4(1.0\ ft) = 4\ ft$$

$$Depth = 3.5(D_{50}) = 3.5\ (5\ in) = 17.5\ inches$$

Note: Design flow from HydroCAD was estimated to be 0.31 cfs (toward the riprap, during a 10-year storm). Based on this low flow rate, the culvert has been designed with the minimum recommended length and depth of rip rap apron.

C

Supporting Figures & Documents

United States Department of Agriculture

NRCS

Natural Resources Conservation Service

A product of the National Cooperative Soil Survey, a joint effort of the United States Department of Agriculture and other Federal agencies, State agencies including the Agricultural Experiment Stations, and local participants

Custom Soil Resource Report for Essex County, Massachusetts, Northern Part

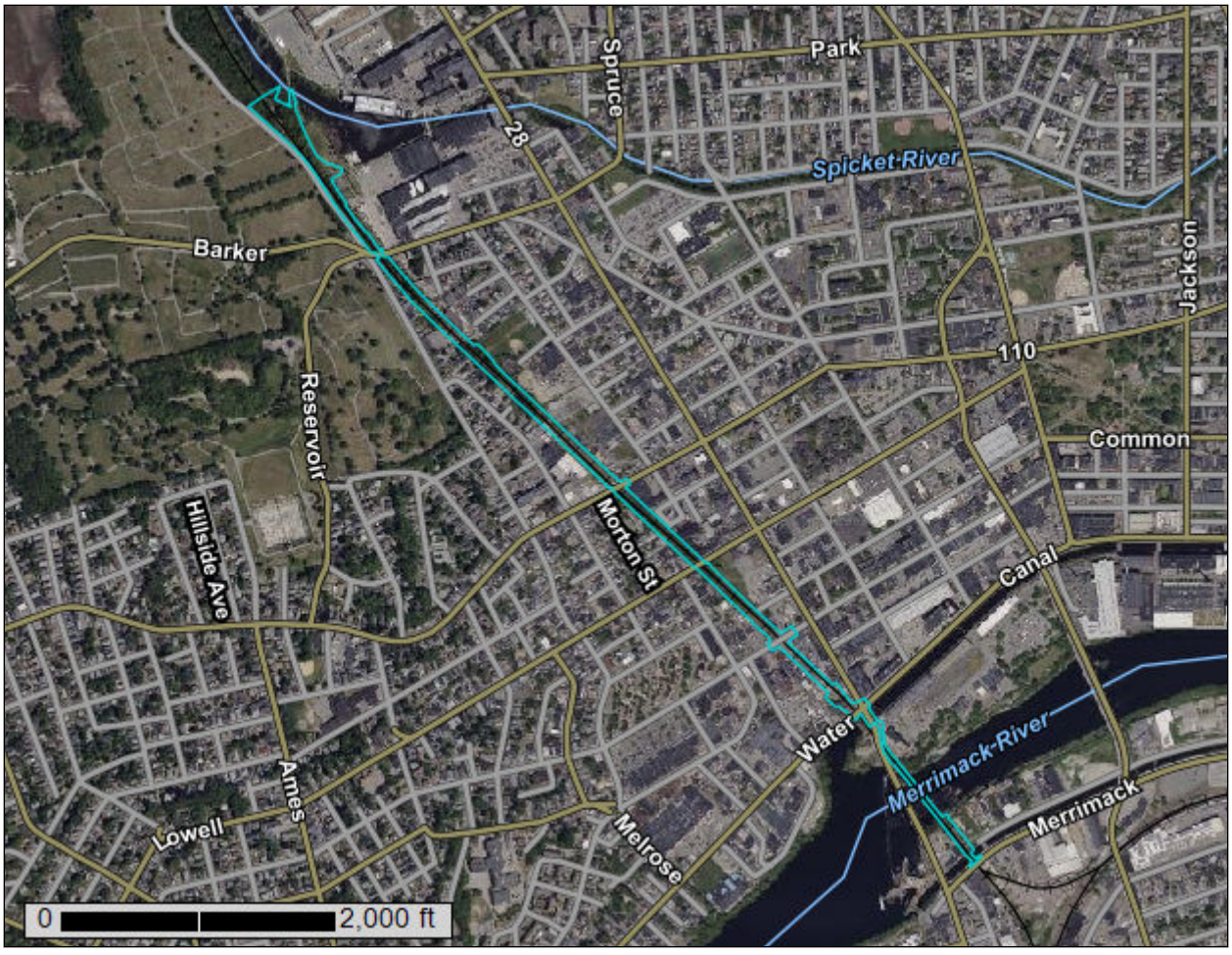

September 15, 2022

Preface

Soil surveys contain information that affects land use planning in survey areas. They highlight soil limitations that affect various land uses and provide information about the properties of the soils in the survey areas. Soil surveys are designed for many different users, including farmers, ranchers, foresters, agronomists, urban planners, community officials, engineers, developers, builders, and home buyers. Also, conservationists, teachers, students, and specialists in recreation, waste disposal, and pollution control can use the surveys to help them understand, protect, or enhance the environment.

Various land use regulations of Federal, State, and local governments may impose special restrictions on land use or land treatment. Soil surveys identify soil properties that are used in making various land use or land treatment decisions. The information is intended to help the land users identify and reduce the effects of soil limitations on various land uses. The landowner or user is responsible for identifying and complying with existing laws and regulations.

Although soil survey information can be used for general farm, local, and wider area planning, onsite investigation is needed to supplement this information in some cases. Examples include soil quality assessments (http://www.nrcs.usda.gov/wps/portal/nrcs/main/soils/health/) and certain conservation and engineering applications. For more detailed information, contact your local USDA Service Center (https://offices.sc.egov.usda.gov/locator/app?agency=nrcs) or your NRCS State Soil Scientist (http://www.nrcs.usda.gov/wps/portal/nrcs/detail/soils/contactus/?cid=nrcs142p2_053951).

Great differences in soil properties can occur within short distances. Some soils are seasonally wet or subject to flooding. Some are too unstable to be used as a foundation for buildings or roads. Clayey or wet soils are poorly suited to use as septic tank absorption fields. A high water table makes a soil poorly suited to basements or underground installations.

The National Cooperative Soil Survey is a joint effort of the United States Department of Agriculture and other Federal agencies, State agencies including the Agricultural Experiment Stations, and local agencies. The Natural Resources Conservation Service (NRCS) has leadership for the Federal part of the National Cooperative Soil Survey.

Information about soils is updated periodically. Updated information is available through the NRCS Web Soil Survey, the site for official soil survey information.

The U.S. Department of Agriculture (USDA) prohibits discrimination in all its programs and activities on the basis of race, color, national origin, age, disability, and where applicable, sex, marital status, familial status, parental status, religion, sexual orientation, genetic information, political beliefs, reprisal, or because all or a part of an individual's income is derived from any public assistance program. (Not all prohibited bases apply to all programs.) Persons with disabilities who require

alternative means for communication of program information (Braille, large print, audiotape, etc.) should contact USDA's TARGET Center at (202) 720-2600 (voice and TDD). To file a complaint of discrimination, write to USDA, Director, Office of Civil Rights, 1400 Independence Avenue, S.W., Washington, D.C. 20250-9410 or call (800) 795-3272 (voice) or (202) 720-6382 (TDD). USDA is an equal opportunity provider and employer.

Contents

Preface.....2
How Soil Surveys Are Made.....5
Soil Map.....8
Soil Map.....9
Legend.....10
Map Unit Legend.....11
Map Unit Descriptions.....11
Essex County, Massachusetts, Northern Part.....13
1—Water.....13
253B—Hinckley loamy sand, 3 to 8 percent slopes.....13
253C—Hinckley loamy sand, 8 to 15 percent slopes.....15
257E—Hinckley and Windsor soils, 25 to 35 percent slopes.....16
602—Urban land.....18
651—Udorthents, smoothed.....19
References.....21

How Soil Surveys Are Made

Soil surveys are made to provide information about the soils and miscellaneous areas in a specific area. They include a description of the soils and miscellaneous areas and their location on the landscape and tables that show soil properties and limitations affecting various uses. Soil scientists observed the steepness, length, and shape of the slopes; the general pattern of drainage; the kinds of crops and native plants; and the kinds of bedrock. They observed and described many soil profiles. A soil profile is the sequence of natural layers, or horizons, in a soil. The profile extends from the surface down into the unconsolidated material in which the soil formed or from the surface down to bedrock. The unconsolidated material is devoid of roots and other living organisms and has not been changed by other biological activity.

Currently, soils are mapped according to the boundaries of major land resource areas (MLRAs). MLRAs are geographically associated land resource units that share common characteristics related to physiography, geology, climate, water resources, soils, biological resources, and land uses (USDA, 2006). Soil survey areas typically consist of parts of one or more MLRA.

The soils and miscellaneous areas in a survey area occur in an orderly pattern that is related to the geology, landforms, relief, climate, and natural vegetation of the area. Each kind of soil and miscellaneous area is associated with a particular kind of landform or with a segment of the landform. By observing the soils and miscellaneous areas in the survey area and relating their position to specific segments of the landform, a soil scientist develops a concept, or model, of how they were formed. Thus, during mapping, this model enables the soil scientist to predict with a considerable degree of accuracy the kind of soil or miscellaneous area at a specific location on the landscape.

Commonly, individual soils on the landscape merge into one another as their characteristics gradually change. To construct an accurate soil map, however, soil scientists must determine the boundaries between the soils. They can observe only a limited number of soil profiles. Nevertheless, these observations, supplemented by an understanding of the soil-vegetation-landscape relationship, are sufficient to verify predictions of the kinds of soil in an area and to determine the boundaries.

Soil scientists recorded the characteristics of the soil profiles that they studied. They noted soil color, texture, size and shape of soil aggregates, kind and amount of rock fragments, distribution of plant roots, reaction, and other features that enable them to identify soils. After describing the soils in the survey area and determining their properties, the soil scientists assigned the soils to taxonomic classes (units). Taxonomic classes are concepts. Each taxonomic class has a set of soil characteristics with precisely defined limits. The classes are used as a basis for comparison to classify soils systematically. Soil taxonomy, the system of taxonomic classification used in the United States, is based mainly on the kind and character of soil properties and the arrangement of horizons within the profile. After the soil

scientists classified and named the soils in the survey area, they compared the individual soils with similar soils in the same taxonomic class in other areas so that they could confirm data and assemble additional data based on experience and research.

The objective of soil mapping is not to delineate pure map unit components; the objective is to separate the landscape into landforms or landform segments that have similar use and management requirements. Each map unit is defined by a unique combination of soil components and/or miscellaneous areas in predictable proportions. Some components may be highly contrasting to the other components of the map unit. The presence of minor components in a map unit in no way diminishes the usefulness or accuracy of the data. The delineation of such landforms and landform segments on the map provides sufficient information for the development of resource plans. If intensive use of small areas is planned, onsite investigation is needed to define and locate the soils and miscellaneous areas.

Soil scientists make many field observations in the process of producing a soil map. The frequency of observation is dependent upon several factors, including scale of mapping, intensity of mapping, design of map units, complexity of the landscape, and experience of the soil scientist. Observations are made to test and refine the soil-landscape model and predictions and to verify the classification of the soils at specific locations. Once the soil-landscape model is refined, a significantly smaller number of measurements of individual soil properties are made and recorded. These measurements may include field measurements, such as those for color, depth to bedrock, and texture, and laboratory measurements, such as those for content of sand, silt, clay, salt, and other components. Properties of each soil typically vary from one point to another across the landscape.

Observations for map unit components are aggregated to develop ranges of characteristics for the components. The aggregated values are presented. Direct measurements do not exist for every property presented for every map unit component. Values for some properties are estimated from combinations of other properties.

While a soil survey is in progress, samples of some of the soils in the area generally are collected for laboratory analyses and for engineering tests. Soil scientists interpret the data from these analyses and tests as well as the field-observed characteristics and the soil properties to determine the expected behavior of the soils under different uses. Interpretations for all of the soils are field tested through observation of the soils in different uses and under different levels of management. Some interpretations are modified to fit local conditions, and some new interpretations are developed to meet local needs. Data are assembled from other sources, such as research information, production records, and field experience of specialists. For example, data on crop yields under defined levels of management are assembled from farm records and from field or plot experiments on the same kinds of soil.

Predictions about soil behavior are based not only on soil properties but also on such variables as climate and biological activity. Soil conditions are predictable over long periods of time, but they are not predictable from year to year. For example, soil scientists can predict with a fairly high degree of accuracy that a given soil will have a high water table within certain depths in most years, but they cannot predict that a high water table will always be at a specific level in the soil on a specific date.

After soil scientists located and identified the significant natural bodies of soil in the survey area, they drew the boundaries of these bodies on aerial photographs and

identified each as a specific map unit. Aerial photographs show trees, buildings, fields, roads, and rivers, all of which help in locating boundaries accurately.

Soil Map

The soil map section includes the soil map for the defined area of interest, a list of soil map units on the map and extent of each map unit, and cartographic symbols displayed on the map. Also presented are various metadata about data used to produce the map, and a description of each soil map unit.

Custom Soil Resource Report
Soil Map

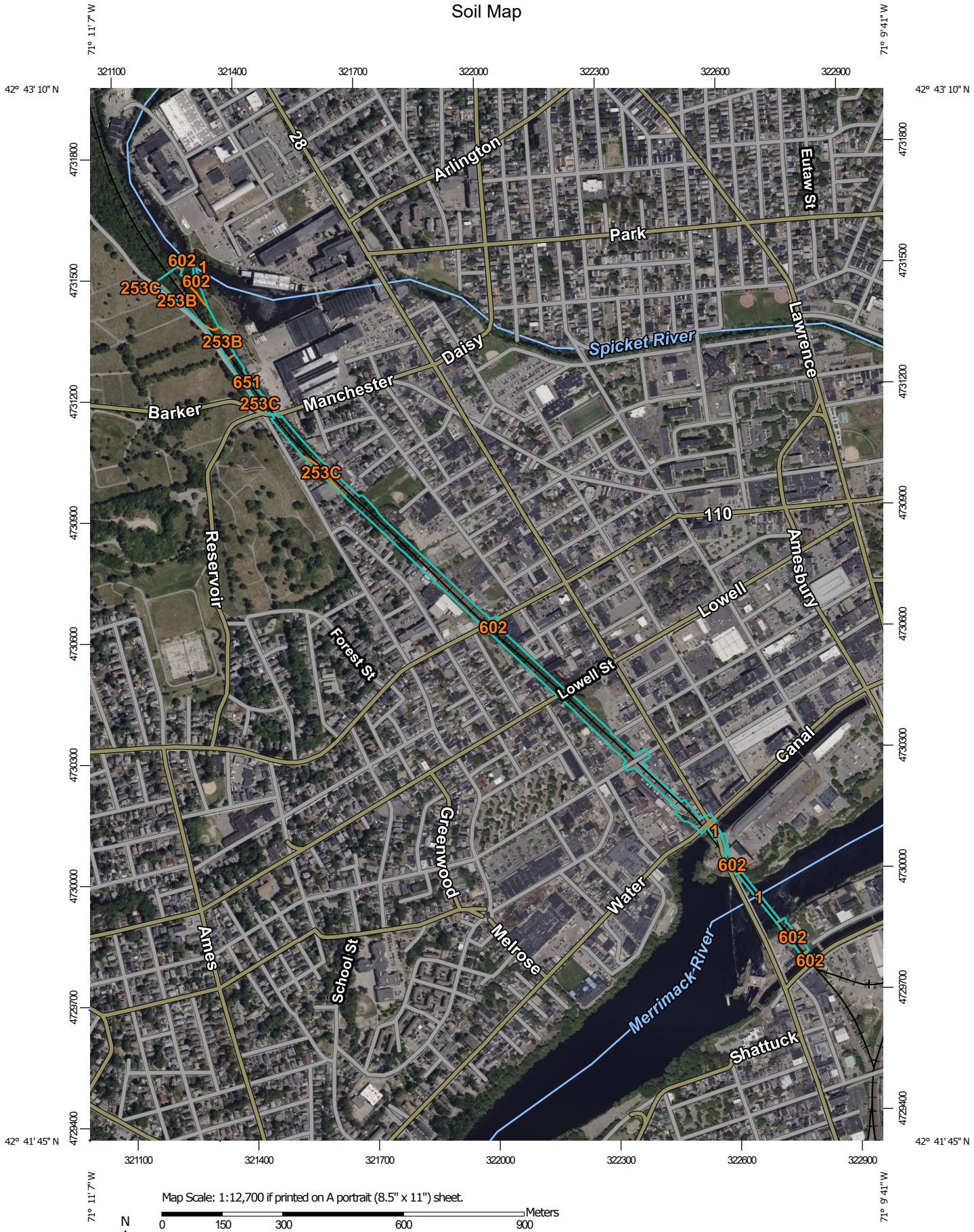

MAP LEGEND

Area of Interest (AOI)
- Area of Interest (AOI)

Soils
- Soil Map Unit Polygons
- Soil Map Unit Lines
- Soil Map Unit Points

Special Point Features
- Blowout
- Borrow Pit
- Clay Spot
- Closed Depression
- Gravel Pit
- Gravelly Spot
- Landfill
- Lava Flow
- Marsh or swamp
- Mine or Quarry
- Miscellaneous Water
- Perennial Water
- Rock Outcrop
- Saline Spot
- Sandy Spot
- Severely Eroded Spot
- Sinkhole
- Slide or Slip
- Sodic Spot
- Spoil Area
- Stony Spot
- Very Stony Spot
- Wet Spot
- Other
- Special Line Features

Water Features
- Streams and Canals

Transportation
- Rails
- Interstate Highways
- US Routes
- Major Roads
- Local Roads

Background
- Aerial Photography

MAP INFORMATION

The soil surveys that comprise your AOI were mapped at 1:15,800.

Please rely on the bar scale on each map sheet for map measurements.

Source of Map: Natural Resources Conservation Service
Web Soil Survey URL:
Coordinate System: Web Mercator (EPSG:3857)

Maps from the Web Soil Survey are based on the Web Mercator projection, which preserves direction and shape but distorts distance and area. A projection that preserves area, such as the Albers equal-area conic projection, should be used if more accurate calculations of distance or area are required.

This product is generated from the USDA-NRCS certified data as of the version date(s) listed below.

Soil Survey Area: Essex County, Massachusetts, Northern Part
Survey Area Data: Version 17, Sep 2, 2021

Soil map units are labeled (as space allows) for map scales 1:50,000 or larger.

Date(s) aerial images were photographed: May 22, 2022—Jun 5, 2022

The orthophoto or other base map on which the soil lines were compiled and digitized probably differs from the background imagery displayed on these maps. As a result, some minor shifting of map unit boundaries may be evident.

A00860 - 397

Proposal No. 608930-128034

Map Unit Legend

Map Unit Symbol	Map Unit Name	Acres in AOI	Percent of AOI
1	Water	0.7	4.6%
253B	Hinckley loamy sand, 3 to 8 percent slopes	0.6	4.0%
253C	Hinckley loamy sand, 8 to 15 percent slopes	0.3	1.7%
257E	Hinckley and Windsor soils, 25 to 35 percent slopes	1.9	12.7%
602	Urban land	11.1	72.7%
651	Udorthents, smoothed	0.7	4.4%
Totals for Area of Interest		**15.3**	**100.0%**

Map Unit Descriptions

The map units delineated on the detailed soil maps in a soil survey represent the soils or miscellaneous areas in the survey area. The map unit descriptions, along with the maps, can be used to determine the composition and properties of a unit.

A map unit delineation on a soil map represents an area dominated by one or more major kinds of soil or miscellaneous areas. A map unit is identified and named according to the taxonomic classification of the dominant soils. Within a taxonomic class there are precisely defined limits for the properties of the soils. On the landscape, however, the soils are natural phenomena, and they have the characteristic variability of all natural phenomena. Thus, the range of some observed properties may extend beyond the limits defined for a taxonomic class. Areas of soils of a single taxonomic class rarely, if ever, can be mapped without including areas of other taxonomic classes. Consequently, every map unit is made up of the soils or miscellaneous areas for which it is named and some minor components that belong to taxonomic classes other than those of the major soils.

Most minor soils have properties similar to those of the dominant soil or soils in the map unit, and thus they do not affect use and management. These are called noncontrasting, or similar, components. They may or may not be mentioned in a particular map unit description. Other minor components, however, have properties and behavioral characteristics divergent enough to affect use or to require different management. These are called contrasting, or dissimilar, components. They generally are in small areas and could not be mapped separately because of the scale used. Some small areas of strongly contrasting soils or miscellaneous areas are identified by a special symbol on the maps. If included in the database for a given area, the contrasting minor components are identified in the map unit descriptions along with some characteristics of each. A few areas of minor components may not have been observed, and consequently they are not mentioned in the descriptions, especially where the pattern was so complex that it was impractical to make enough observations to identify all the soils and miscellaneous areas on the landscape.

The presence of minor components in a map unit in no way diminishes the usefulness or accuracy of the data. The objective of mapping is not to delineate pure taxonomic classes but rather to separate the landscape into landforms or landform segments that have similar use and management requirements. The delineation of such segments on the map provides sufficient information for the development of resource plans. If intensive use of small areas is planned, however, onsite investigation is needed to define and locate the soils and miscellaneous areas.

An identifying symbol precedes the map unit name in the map unit descriptions. Each description includes general facts about the unit and gives important soil properties and qualities.

Soils that have profiles that are almost alike make up a *soil series*. Except for differences in texture of the surface layer, all the soils of a series have major horizons that are similar in composition, thickness, and arrangement.

Soils of one series can differ in texture of the surface layer, slope, stoniness, salinity, degree of erosion, and other characteristics that affect their use. On the basis of such differences, a soil series is divided into *soil phases*. Most of the areas shown on the detailed soil maps are phases of soil series. The name of a soil phase commonly indicates a feature that affects use or management. For example, Alpha silt loam, 0 to 2 percent slopes, is a phase of the Alpha series.

Some map units are made up of two or more major soils or miscellaneous areas. These map units are complexes, associations, or undifferentiated groups.

A *complex* consists of two or more soils or miscellaneous areas in such an intricate pattern or in such small areas that they cannot be shown separately on the maps. The pattern and proportion of the soils or miscellaneous areas are somewhat similar in all areas. Alpha-Beta complex, 0 to 6 percent slopes, is an example.

An *association* is made up of two or more geographically associated soils or miscellaneous areas that are shown as one unit on the maps. Because of present or anticipated uses of the map units in the survey area, it was not considered practical or necessary to map the soils or miscellaneous areas separately. The pattern and relative proportion of the soils or miscellaneous areas are somewhat similar. Alpha-Beta association, 0 to 2 percent slopes, is an example.

An *undifferentiated group* is made up of two or more soils or miscellaneous areas that could be mapped individually but are mapped as one unit because similar interpretations can be made for use and management. The pattern and proportion of the soils or miscellaneous areas in a mapped area are not uniform. An area can be made up of only one of the major soils or miscellaneous areas, or it can be made up of all of them. Alpha and Beta soils, 0 to 2 percent slopes, is an example.

Some surveys include *miscellaneous areas*. Such areas have little or no soil material and support little or no vegetation. Rock outcrop is an example.

Essex County, Massachusetts, Northern Part

1—Water

Map Unit Setting

National map unit symbol: vjx4
Frost-free period: 125 to 165 days
Farmland classification: Not prime farmland

Map Unit Composition

Water: 100 percent
Estimates are based on observations, descriptions, and transects of the mapunit.

253B—Hinckley loamy sand, 3 to 8 percent slopes

Map Unit Setting

National map unit symbol: 2svm8
Elevation: 0 to 1,430 feet
Mean annual precipitation: 36 to 53 inches
Mean annual air temperature: 39 to 55 degrees F
Frost-free period: 140 to 250 days
Farmland classification: Farmland of statewide importance

Map Unit Composition

Hinckley and similar soils: 85 percent
Minor components: 15 percent
Estimates are based on observations, descriptions, and transects of the mapunit.

Description of Hinckley

Setting

Landform: Outwash deltas, outwash terraces, kames, kame terraces, moraines, eskers, outwash plains
Landform position (two-dimensional): Summit, backslope, footslope, shoulder
Landform position (three-dimensional): Nose slope, side slope, base slope, crest, riser, tread
Down-slope shape: Concave, convex, linear
Across-slope shape: Convex, linear, concave
Parent material: Sandy and gravelly glaciofluvial deposits derived from gneiss and/or granite and/or schist

Typical profile

Oe - 0 to 1 inches: moderately decomposed plant material
A - 1 to 8 inches: loamy sand
Bw1 - 8 to 11 inches: gravelly loamy sand
Bw2 - 11 to 16 inches: gravelly loamy sand
BC - 16 to 19 inches: very gravelly loamy sand
C - 19 to 65 inches: very gravelly sand

Properties and qualities

Slope: 3 to 8 percent
Depth to restrictive feature: More than 80 inches

Drainage class: Excessively drained
Runoff class: Very low
Capacity of the most limiting layer to transmit water (Ksat): Moderately high to very high (1.42 to 99.90 in/hr)
Depth to water table: More than 80 inches
Frequency of flooding: None
Frequency of ponding: None
Maximum salinity: Nonsaline (0.0 to 1.9 mmhos/cm)
Available water supply, 0 to 60 inches: Very low (about 3.0 inches)

Interpretive groups

Land capability classification (irrigated): None specified
Land capability classification (nonirrigated): 3s
Hydrologic Soil Group: A
Ecological site: F144AY022MA - Dry Outwash
Hydric soil rating: No

Minor Components

Windsor

Percent of map unit: 8 percent
Landform: Outwash deltas, outwash terraces, moraines, eskers, kames, outwash plains, kame terraces
Landform position (two-dimensional): Summit, shoulder, backslope, footslope
Landform position (three-dimensional): Nose slope, side slope, base slope, crest, riser, tread
Down-slope shape: Concave, convex, linear
Across-slope shape: Convex, linear, concave
Hydric soil rating: No

Sudbury

Percent of map unit: 5 percent
Landform: Outwash deltas, outwash terraces, moraines, outwash plains, kame terraces
Landform position (two-dimensional): Backslope, footslope
Landform position (three-dimensional): Head slope, base slope, side slope, tread
Down-slope shape: Concave, linear
Across-slope shape: Concave, linear
Hydric soil rating: No

Agawam

Percent of map unit: 2 percent
Landform: Outwash deltas, outwash terraces, moraines, eskers, kames, outwash plains, kame terraces
Landform position (two-dimensional): Summit, shoulder, backslope, footslope
Landform position (three-dimensional): Nose slope, side slope, base slope, crest, riser, tread
Down-slope shape: Concave, convex, linear
Across-slope shape: Convex, linear, concave
Hydric soil rating: No

253C—Hinckley loamy sand, 8 to 15 percent slopes

Map Unit Setting

National map unit symbol: 2svm9
Elevation: 0 to 1,480 feet
Mean annual precipitation: 36 to 71 inches
Mean annual air temperature: 39 to 55 degrees F
Frost-free period: 140 to 240 days
Farmland classification: Farmland of statewide importance

Map Unit Composition

Hinckley and similar soils: 85 percent
Minor components: 15 percent
Estimates are based on observations, descriptions, and transects of the mapunit.

Description of Hinckley

Setting

Landform: Outwash deltas, outwash terraces, moraines, eskers, kames, outwash plains, kame terraces
Landform position (two-dimensional): Shoulder, toeslope, footslope, backslope
Landform position (three-dimensional): Head slope, crest, side slope, nose slope, riser
Down-slope shape: Concave, convex, linear
Across-slope shape: Convex, linear, concave
Parent material: Sandy and gravelly glaciofluvial deposits derived from gneiss and/or granite and/or schist

Typical profile

Oe - 0 to 1 inches: moderately decomposed plant material
A - 1 to 8 inches: loamy sand
Bw1 - 8 to 11 inches: gravelly loamy sand
Bw2 - 11 to 16 inches: gravelly loamy sand
BC - 16 to 19 inches: very gravelly loamy sand
C - 19 to 65 inches: very gravelly sand

Properties and qualities

Slope: 8 to 15 percent
Depth to restrictive feature: More than 80 inches
Drainage class: Excessively drained
Runoff class: Very low
Capacity of the most limiting layer to transmit water (Ksat): Moderately high to very high (1.42 to 99.90 in/hr)
Depth to water table: More than 80 inches
Frequency of flooding: None
Frequency of ponding: None
Maximum salinity: Nonsaline (0.0 to 1.9 mmhos/cm)
Available water supply, 0 to 60 inches: Low (about 3.1 inches)

Interpretive groups

Land capability classification (irrigated): None specified
Land capability classification (nonirrigated): 4e
Hydrologic Soil Group: A
Ecological site: F144AY022MA - Dry Outwash
Hydric soil rating: No

Minor Components

Sudbury

Percent of map unit: 5 percent
Landform: Outwash deltas, moraines, outwash plains, kame terraces, outwash terraces
Landform position (two-dimensional): Backslope, footslope
Landform position (three-dimensional): Base slope, tread
Down-slope shape: Concave, linear
Across-slope shape: Concave, linear
Hydric soil rating: No

Windsor

Percent of map unit: 5 percent
Landform: Moraines, eskers, kames, outwash deltas, outwash terraces, outwash plains, kame terraces
Landform position (two-dimensional): Shoulder, backslope, footslope, toeslope
Landform position (three-dimensional): Nose slope, side slope, crest, head slope, riser
Down-slope shape: Concave, convex, linear
Across-slope shape: Convex, linear, concave
Hydric soil rating: No

Merrimac

Percent of map unit: 5 percent
Landform: Kames, outwash plains, outwash terraces, moraines, eskers
Landform position (two-dimensional): Shoulder, backslope, footslope, toeslope
Landform position (three-dimensional): Side slope, crest, head slope, nose slope, riser
Down-slope shape: Convex
Across-slope shape: Convex
Hydric soil rating: No

257E—Hinckley and Windsor soils, 25 to 35 percent slopes

Map Unit Setting

National map unit symbol: 2svm2
Elevation: 0 to 1,470 feet
Mean annual precipitation: 36 to 71 inches
Mean annual air temperature: 39 to 55 degrees F
Frost-free period: 145 to 240 days
Farmland classification: Not prime farmland

Map Unit Composition

Hinckley and similar soils: 50 percent
Windsor and similar soils: 40 percent
Minor components: 10 percent
Estimates are based on observations, descriptions, and transects of the mapunit.

Description of Hinckley

Setting

Landform: Outwash deltas, outwash terraces, moraines, eskers, kames, outwash plains, kame terraces
Landform position (two-dimensional): Backslope
Landform position (three-dimensional): Nose slope, side slope, crest, head slope, riser
Down-slope shape: Concave, convex, linear
Across-slope shape: Convex, linear, concave
Parent material: Sandy and gravelly glaciofluvial deposits derived from gneiss and/or granite and/or schist

Typical profile

Oe - 0 to 1 inches: moderately decomposed plant material
A - 1 to 8 inches: loamy sand
Bw1 - 8 to 11 inches: gravelly loamy sand
Bw2 - 11 to 16 inches: gravelly loamy sand
BC - 16 to 19 inches: very gravelly loamy sand
C - 19 to 65 inches: very gravelly sand

Properties and qualities

Slope: 25 to 35 percent
Depth to restrictive feature: More than 80 inches
Drainage class: Excessively drained
Runoff class: Very low
Capacity of the most limiting layer to transmit water (Ksat): Moderately high to very high (1.42 to 99.90 in/hr)
Depth to water table: More than 80 inches
Frequency of flooding: None
Frequency of ponding: None
Maximum salinity: Nonsaline (0.0 to 1.9 mmhos/cm)
Available water supply, 0 to 60 inches: Low (about 3.1 inches)

Interpretive groups

Land capability classification (irrigated): None specified
Land capability classification (nonirrigated): 6e
Hydrologic Soil Group: A
Ecological site: F144AY022MA - Dry Outwash
Hydric soil rating: No

Description of Windsor

Setting

Landform: Moraines, eskers, kames, outwash deltas, outwash terraces, outwash plains, kame terraces
Landform position (two-dimensional): Backslope
Landform position (three-dimensional): Nose slope, side slope, crest, head slope, riser
Down-slope shape: Concave, convex, linear

Across-slope shape: Convex, linear, concave
Parent material: Loose sandy glaciofluvial deposits derived from granite and/or loose sandy glaciofluvial deposits derived from schist and/or loose sandy glaciofluvial deposits derived from gneiss

Typical profile

Oe - 0 to 1 inches: moderately decomposed plant material
A - 1 to 3 inches: loamy sand
Bw - 3 to 25 inches: loamy sand
C - 25 to 65 inches: sand

Properties and qualities

Slope: 25 to 35 percent
Depth to restrictive feature: More than 80 inches
Drainage class: Excessively drained
Runoff class: Very low
Capacity of the most limiting layer to transmit water (Ksat): Moderately high to very high (1.42 to 99.90 in/hr)
Depth to water table: More than 80 inches
Frequency of flooding: None
Frequency of ponding: None
Maximum salinity: Nonsaline (0.0 to 1.9 mmhos/cm)
Available water supply, 0 to 60 inches: Low (about 5.4 inches)

Interpretive groups

Land capability classification (irrigated): None specified
Land capability classification (nonirrigated): 4e
Hydrologic Soil Group: A
Ecological site: F144AY022MA - Dry Outwash
Hydric soil rating: No

Minor Components

Merrimac

Percent of map unit: 10 percent
Landform: Kame terraces, outwash plains, kames, outwash terraces, moraines, eskers
Landform position (two-dimensional): Backslope
Landform position (three-dimensional): Nose slope, head slope, side slope, crest, riser
Down-slope shape: Concave, convex, linear
Across-slope shape: Convex, linear, concave
Hydric soil rating: No

602—Urban land

Map Unit Setting

National map unit symbol: vjx3
Frost-free period: 125 to 165 days
Farmland classification: Not prime farmland

Map Unit Composition
Urban land: 80 percent
Minor components: 20 percent
Estimates are based on observations, descriptions, and transects of the mapunit.

Description of Urban Land

Setting
Parent material: Excavated and filled land

Minor Components

Udorthents
Percent of map unit: 10 percent
Hydric soil rating: No

Merrimac
Percent of map unit: 2 percent
Hydric soil rating: No

Hinckley
Percent of map unit: 2 percent
Hydric soil rating: No

Windsor
Percent of map unit: 2 percent
Hydric soil rating: No

Charlton
Percent of map unit: 2 percent
Hydric soil rating: No

Paxton
Percent of map unit: 2 percent
Hydric soil rating: No

651—Udorthents, smoothed

Map Unit Setting
National map unit symbol: vjwk
Elevation: 0 to 3,000 feet
Mean annual precipitation: 45 to 54 inches
Mean annual air temperature: 43 to 54 degrees F
Frost-free period: 145 to 240 days
Farmland classification: Not prime farmland

Map Unit Composition
Udorthents and similar soils: 80 percent
Minor components: 20 percent
Estimates are based on observations, descriptions, and transects of the mapunit.

Description of Udorthents

Setting

Parent material: Excavated and filled land loamy and/or excavated and filled land sandy and gravelly

Typical profile

H1 - 0 to 6 inches: variable
H2 - 6 to 60 inches: variable

Properties and qualities

Slope: 0 to 3 percent
Depth to restrictive feature: More than 80 inches
Capacity of the most limiting layer to transmit water (Ksat): Moderately low to very high (0.06 to 20.00 in/hr)
Depth to water table: More than 80 inches
Frequency of flooding: None
Frequency of ponding: None

Interpretive groups

Land capability classification (irrigated): None specified
Land capability classification (nonirrigated): 6s
Hydrologic Soil Group: A
Hydric soil rating: Unranked

Minor Components

Urban land

Percent of map unit: 10 percent
Hydric soil rating: Unranked

Beaches

Percent of map unit: 8 percent
Hydric soil rating: Unranked

Dumps

Percent of map unit: 2 percent
Hydric soil rating: Unranked

References

American Association of State Highway and Transportation Officials (AASHTO). 2004. Standard specifications for transportation materials and methods of sampling and testing. 24th edition.

American Society for Testing and Materials (ASTM). 2005. Standard classification of soils for engineering purposes. ASTM Standard D2487-00.

Cowardin, L.M., V. Carter, F.C. Golet, and E.T. LaRoe. 1979. Classification of wetlands and deep-water habitats of the United States. U.S. Fish and Wildlife Service FWS/OBS-79/31.

Federal Register. July 13, 1994. Changes in hydric soils of the United States.

Federal Register. September 18, 2002. Hydric soils of the United States.

Hurt, G.W., and L.M. Vasilas, editors. Version 6.0, 2006. Field indicators of hydric soils in the United States.

National Research Council. 1995. Wetlands: Characteristics and boundaries.

Soil Survey Division Staff. 1993. Soil survey manual. Soil Conservation Service. U.S. Department of Agriculture Handbook 18. http://www.nrcs.usda.gov/wps/portal/nrcs/detail/national/soils/?cid=nrcs142p2_054262

Soil Survey Staff. 1999. Soil taxonomy: A basic system of soil classification for making and interpreting soil surveys. 2nd edition. Natural Resources Conservation Service, U.S. Department of Agriculture Handbook 436. http://www.nrcs.usda.gov/wps/portal/nrcs/detail/national/soils/?cid=nrcs142p2_053577

Soil Survey Staff. 2010. Keys to soil taxonomy. 11th edition. U.S. Department of Agriculture, Natural Resources Conservation Service. http://www.nrcs.usda.gov/wps/portal/nrcs/detail/national/soils/?cid=nrcs142p2_053580

Tiner, R.W., Jr. 1985. Wetlands of Delaware. U.S. Fish and Wildlife Service and Delaware Department of Natural Resources and Environmental Control, Wetlands Section.

United States Army Corps of Engineers, Environmental Laboratory. 1987. Corps of Engineers wetlands delineation manual. Waterways Experiment Station Technical Report Y-87-1.

United States Department of Agriculture, Natural Resources Conservation Service. National forestry manual. http://www.nrcs.usda.gov/wps/portal/nrcs/detail/soils/home/?cid=nrcs142p2_053374

United States Department of Agriculture, Natural Resources Conservation Service. National range and pasture handbook. http://www.nrcs.usda.gov/wps/portal/nrcs/detail/national/landuse/rangepasture/?cid=stelprdb1043084

United States Department of Agriculture, Natural Resources Conservation Service. National soil survey handbook, title 430-VI. http://www.nrcs.usda.gov/wps/portal/nrcs/detail/soils/scientists/?cid=nrcs142p2_054242

United States Department of Agriculture, Natural Resources Conservation Service. 2006. Land resource regions and major land resource areas of the United States, the Caribbean, and the Pacific Basin. U.S. Department of Agriculture Handbook 296. http://www.nrcs.usda.gov/wps/portal/nrcs/detail/national/soils/?cid=nrcs142p2_053624

United States Department of Agriculture, Soil Conservation Service. 1961. Land capability classification. U.S. Department of Agriculture Handbook 210. http://www.nrcs.usda.gov/Internet/FSE_DOCUMENTS/nrcs142p2_052290.pdf

650 Suffolk St., Suite 200
Lowell, MA 01854
T 978.970.5600
TRCcompanies.com

July 29, 2019
Project No. 274047

Mr. Jody Trunfio, PE
Principal
TEC, Inc.
146 Dascom Road
Andover, MA 01810
(978) 794-1792
jtrunfio@theengineeringcorp.com

Re: Geotechnical Data Report
Stormwater Infiltration
Lawrence Manchester Rail Corridor
Lawrence, Massachusetts

Dear Mr. Trunfio:

TRC Environmental Corporation (TRC) has prepared this report for The Engineering Corporation (TEC) to present the results of subsurface explorations, soil testing and in-situ testing of soil infiltration rates at the proposed Lawrence Manchester Rail Corridor (LMRC) in Lawrence, Massachusetts (Site). TEC is currently assisting the City of Lawrence with the design of a rail trail that will utilize a former section of MBTA railroad right of way extending approximately 7,670 feet northwesterly from Route 114 to the Lawrence-Methuen line. Existing Site features referenced herein are based on a topographic survey drawing (survey) prepared by Greenman-Pedersen, Inc., (GPI) dated April 28, 2017. Elevations presented in this report are provided in feet, and are relative to the North American Vertical Datum of 1988 (NAVD88). This report was prepared in accordance with our February 1, 2017 agreement and is subject to the limitations included in Appendix A.

PROPOSED CONSTRUCTION

TRC understands that stormwater along the rail trail will be managed using a variety of Best Management Practices (BMPs) including infiltration. TEC directed TRC to excavate eight test pits at potential BMP locations to collect information for use in the design of infiltration systems.

SUBSURFACE EXPLORATIONS

Mill City Environmental of Lowell, Massachusetts excavated eight test pits (TRC-1 through TRC-8) at the Site on July 11, 12, 13 and 18, 2017. A TRC geologist observed the excavation of the test pits, recorded the subsurface conditions encountered, collected soil samples for laboratory testing, and conducted in-situ infiltration tests. The test pits were excavated in the locations identified by TEC with the exception of TRC-2 and TRC-7, which were moved due to surface obstructions or the location of underground utilities. The test pits were excavated to depths ranging between 9 and 10 feet below the existing ground surface (bgs). The locations of the test pits are illustrated on the survey drawings provided by GPI (Appendix B), and test pit logs are provided in Appendix C.

SUBSURFACE CONDITIONS

Materials encountered in the test pits generally consisted of between 2 and 9.5 feet of fill material overlying sand with varying amounts of silt and gravel. The fill material was not penetrated to a depth

of 9 feet bgs at TRC-1. A layer of grey silty clay was encountered below the sand stratum at a depth of 4.5 feet bgs in TRC-5.

GROUNDWATER

Evidence of seasonal high groundwater was not encountered in the test pits. With the exception of TRC-3 and TRC-5, groundwater was not encountered in the test pits to the termination depths of between 9 and 10 feet bgs. Groundwater was encountered in TRC-3 at 9.5 feet bgs and at a depth of 3.5 feet bgs in TRC-5.

IN-SITU INFILTRATION TESTING

TRC conducted an in-situ infiltration test at each test pit to measure the permeability of the soils to stormwater. The tests were conducted using a 4-inch diameter PVC pipe fitted with a sight tube and steel ruler used to monitor the drop of water within the PVC pipe infiltrometer over time. The bottom of the infiltrometer was buried 12 inches below the bottom of the test pit for each test. Bentonite chips were placed between the infiltrometer pipe and the surrounding soils, hydrated and compacted to create a seal that was intended to prevent water from coming up around the pipe instead of draining downward. Water was placed in the infiltrometer and the water level was recorded over time. The water level/time data were analyzed using variable head and basic time-lag methods that are presented in calculation spreadsheets presented in Appendix D.

LABORATORY TESTING

One soil sample from each test pit was collected at the approximate depth of the bottom of the 4-inch diameter infiltrometer and tested in a geotechnical soils laboratory for grain size analysis and USDA Soil Textural Classification. The laboratory test report is provided in Appendix E.

SUMMARY OF FINDINGS

The results of the subsurface explorations, laboratory tests and infiltration tests are summarized in Table 1 below.

Table 1 Summary of Findings

Test Pit	Existing GSE, ft.	GW Depth, ft.	Infiltration Test Elevation, ft.	Infiltration Rate, in/hr	USDA Classification
TRC-1	74.8	>9	70.0	2.4	Sand
TRC-2	67.5	>9	63.0	15.7	Sand
TRC-3	63.0	9.5	58.5	6.2	Sand
TRC-4	60.0	>10	55.5	1.4	Sand
TRC-5	50.5	3.5	49.0	25.7	Loam
TRC-6	51.5	>10	47.0	0.46	Sandy Loam
TRC-7	51.0	>9	46.5	25.3	Sand
TRC-8	51.5	>10	47.0	19.6	Sandy Loam

Thank you for the opportunity to be of service. Should you require additional information, please contact us.

Very truly yours,

TRC Environmental Corporation

Matthew Carlino, P.E. *
Senior Project Engineer
*MA

Gregory A. Mischel, P.E.*
Senior Project Manager
*MA, VT

Appendix A: Limitations
Appendix B: Test Pit Locations
Appendix C: Test Pit Logs
Appendix D: Calculations
Appendix E: Laboratory Test Results

APPENDIX A - LIMITATIONS

LIMITATIONS

Explorations

1. The analyses, recommendations, and designs submitted in this report are based in part on the data obtained from subsurface explorations. The nature and extent of variations between these explorations may not become evident until construction. If variations then appear evident, it will be necessary to re-evaluate the recommendations of this report.
2. The generalized soil profile described in the text is intended to convey trends in subsurface
3. conditions. The boundaries between strata are approximate and idealized, and have been developed by interpretation of widely spaced explorations and samples; actual soil transitions may be more or less gradual than indicated. For specific information, refer to the test boring logs.
4. Water level readings have been made in the drill holes at the times and under the conditions stated on the test boring logs. These data have been reviewed and interpretations have been made in the text of this report. However, it must be noted that fluctuations in the level of the groundwater may occur due to variations in rainfall, temperature, and other factors differing from those occurring at the time measurements were made.

Review

1. In the event that any changes in the nature, design, or location of the proposed construction are planned, the conclusions and recommendations contained in this report shall not be considered valid unless the changes are reviewed, and conclusions of the report modified or verified in writing by TRC.

Construction

1. It is recommended that this firm be retained to provide soil engineering services during the foundation, excavation and earthwork construction phases of the work. This is to observe compliance with the design concepts, specifications, or recommendations and to allow design changes in the event that subsurface conditions differ from those anticipated prior to the start of construction.

Use of Report

1. This report has been prepared for the exclusive use of TEC for the proposed reuse of the existing bridge abutment foundations and proposed new wingwall foundation construction at the former railroad bridge over Manchester Street, Lawrence, MA in accordance with generally accepted soil and foundation engineering practices. No other warranty, expressed or implied, is made.
2. This engineering report has been prepared for this project by TRC for design purposes only and is not sufficient to prepare an accurate bid. Contractors wishing a copy of this report may secure it with the understanding that its scope is limited to design considerations only.

APPENDIX B – TEST PIT LOCATIONS

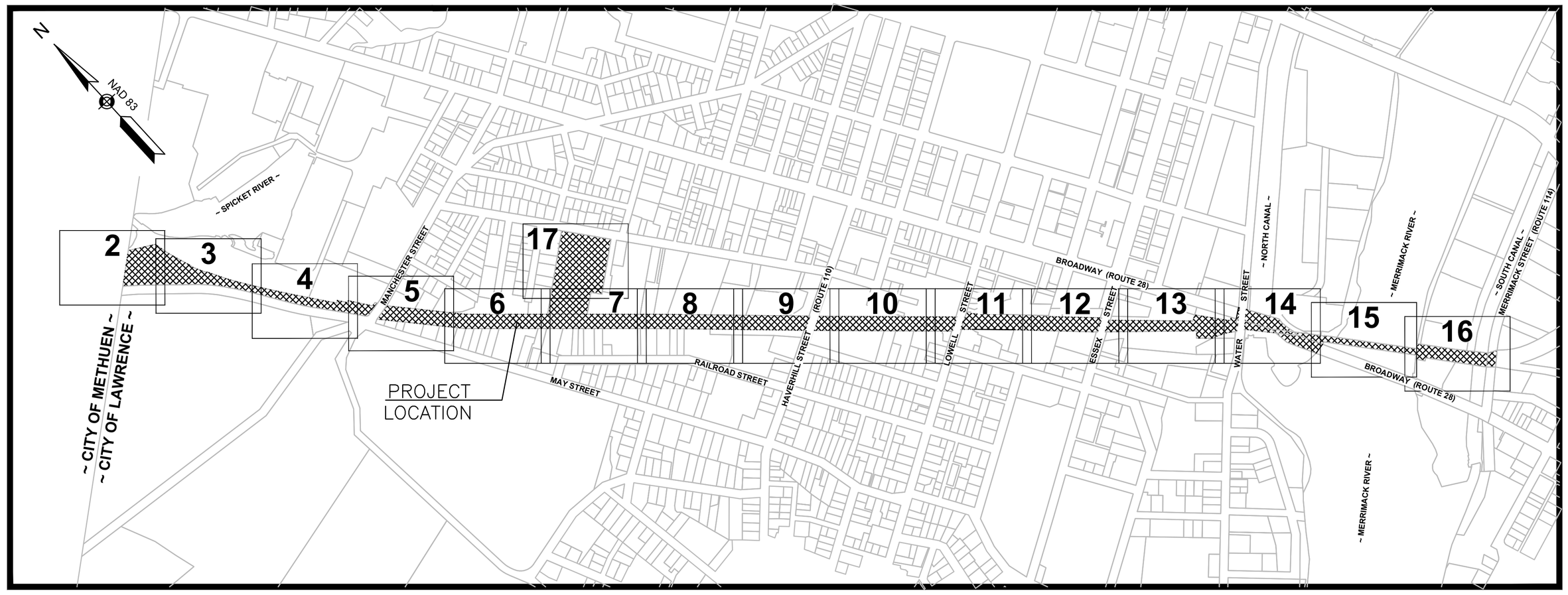

SURVEY NOTES

1. THE BASEPLAN WAS COMPILED FROM TERESTRIAL LIDAR DATA COLLECTED BY GREENMAN-PEDERSEN, INC. IN JANUARY & FEBRUARY, 2017.
2. THE SURVEY CONTROL NETWORK WAS SET BY AN INSTRUMENT FIELD SURVEY PERFORMED BY GREENMAN-PEDERSEN, INC. IN JANUARY & FEBRUARY, 2017.
3. THE HORIZONTAL DATUM SHOWN HEREON IS BASED UPON THE MASSACHUSETTS STATE PLANE COORDINATE SYSTEM - MAINLAND ZONE REFERENCED TO THE NORTH AMERICAN DATUM OF 1983 (NAD83) (2011), EPOCH 2010.00 AS ESTABLISHED BY VIA GPS OBSERVATION IN CONJUNCTION WITH THE MACORS MATB STATION.
4. THE VERTICAL DATUM SHOWN HEREON WAS ESTABLISHED BY GPI IN JANUARY 2017 AND REFERENCES THE NORTH AMERICAN VERTICAL DATUM OF 1988 (NAVD88). RECORD MASSDOT BENCHMARK 8191 (STATION 26 BF) & 16247 (STATION 2249) WERE LEVELED.
5. THE UNITS SHOWN HEREIN ARE US SURVEY FEET.
6. CONTOUR INTERVAL: 1 FOOT
7. THE RAILROAD RIGHT OF WAY CORRIDOR IS BASED UPON RECORD DEEDS, VALUATION MAPS, PLANS AND ASSESSORS INFORMATION OBTAINED AT THE ESSEX COUNTY (NORTH) REGISTRY OF DEEDS, INFORMATION OBTAINED FROM THE CITY HALL AND ASSESSING DEPARTMENTS.
8. THE PROPERTY LINES SHOWN HERON ARE APPROXIMATE ONLY AND ARE BASED UPON RECORD DEEDS, PLANS AND ASSESSORS INFORMATION OBTAINED AT THE ESSEX COUNTY (NORTH) REGISTRY OF DEEDS AND INFORMATION OBTAINED FROM THE CITY HALL AND ASSESSING DEPARTMENTS.
9. SUBSURFACE UTILITY INFORMATION SHOWN HEREON IS APPROXIMATE ONLY AND WAS COMPILED FROM SURFACE EVIDENCE AND SUPPLEMENTED WITH RECORD UTILITY INFORMATION WHERE AVAILABLE AND IS IN COMPLIANCE WITH THE FEDERAL HIGHWAY ADMINISTRATION UTILITY DATA QUALITY LEVEL C. GREENMAN-PEDERSEN, INC. ASSUMES NO RESPONSIBILITY FOR DAMAGES INCURRED AS A RESULT OF UTILITIES OMITTED OR INACCURATELY SHOWN. THE SURVEYOR HAS NOT PHYSICALLY LOCATED THE UNDERGROUND UTILITIES. COORDINATION WITH THE APPROPRIATE UTILITIES BEFORE AND DURING DESIGN OF FUTURE CONNECTIONS IS REQUIRED.
10. CONTACT "DIG SAFE" AT 1 (888) 344-7233 PRIOR TO CONSTRUCTION.

ABBREVIATIONS

AUX	AUXILARY	DIP	DUCTILE IRON PIPE	LCD	LAND COURT DISK	ROW	RIGHT OF WAY				
BD	BOUND	DMH	DRAIN MANHOLE	LO	LAYOUT	RR	RAILROAD				
BIT	BITUMINOUS	DSK	DISK	LPL	LIGHT POLE	RRS	RAILROAD SPIKE				
℄	BASELINE	DWL	DOTTED WHITE LINE	LPD	LIGHT POLE DOUBLE LIGHT	S BD	SOUTHBOUND				
BLDG	BUILDING	DYL	DOTTED YELLOW LINE	LSA	LANDSCAPED AREA	SB	STONE BOUND				
BM	BENCHMARK	EB	EASTBOUND	MA	MAST ARM	SD	SUBDRAIN				
BR	BRIDGE	EL	ELEVATION	MAG	MAG NAIL	SGE	SLOPED GRANITE EDGING				
BRK	BRICK	EMH	ELECTRIC MANHOLE	MBE	MIDDLE BACK EDGE	SHLD	SHOULDER				
BWL	BROKEN WHITE LINE	EP	EDGE OF PAVEMENT	MED	MEDIAN	SHLO	STATE HIGHWAY LAYOUT				
BYL	BROKEN YELLOW LINE	EPLP	ESCUTCHEON PIN IN LEAD PLUG	MH	MANHOLE	SK	SKEW				
CAB	CABINET	ETW	EDGE OF TRAVELED WAY	MP	MILE POST	SL	STOP LINE				
CB	CATCH BASIN	EX	EXISTING	MTL	METAL	SMH	SEWER MANHOLE				
CC	CEMENT CONCRETE CURB	FF	FINISH FLOOR	N/F	NOW OR FORMERLY	SPK	SPIKE				
CCB	CAPE COD BERM	FGS	FLAGSTONE	NB	NORTHBOUND	STA	STATION				
CEN	CENTER	FL	FLOWLINE	OH	OVERHANG	STN	STONE				
CI	CURB INLET	FLDSTN	FIELDSTONE	OHW	OVERHEAD WIRE	SW	SIDEWALK				
CIP	CAST IRON PIPE	GAR	GARAGE	PC	POINT OF CURVATURE	SWL	SOLID WHITE LINE				
℄	CENTER LINE	GC	GRANITE CURB	PCC	POINT OF COMPOUND CURVATURE	SYL	SOLID YELLOW LINE				
CLF	CHAIN LINK FENCE	GD	GROUND	PED	PEDESTRIAN	T	TANGENT DISTANCE				
CMH	CABLE MANHOLE	GIP	GALVANIZED IRON PIPE	PI	POINT OF INTERSECTION	TAN	TANGENT				
CMP	CORRUGATED METAL PIPE	GMH	GAS MANHOLE	PK	PK NAIL	TEMP	TEMPORARY				
CO	COUNTY	GRAN	GRANITE	℄	PROPERTY LINE	TMH	TELEPHONE MANHOLE				
CO BD	COUNTY BOUND	GRAV	GRAVEL	PP	PRICK PUNCH	TR	TOP OF RAIL				
CON	CONIFEROUS	GRD	GUARD	PRC	POINT OF REVERSE CURVATURE	TSC	TRAFFIC SIGNAL CONDUIT				
CONC	CONCRETE	GRL	GUARDRAIL	PT	POINT OF TANGENCY	TYP	TYPICAL				
CPP	CORRUGATED PLASTIC PIPE	HDW	HEADWALL	PVC	POLYVINYL CHLORIDE PIPE	VAR	VARIABLE				
CSP	CORRUGATED STEEL PIPE	HT	HUB & TACK	PVMT	PAVEMENT	VCP	VITRIFIED CLAY PIPE				
CULV	CULVERT	HYD	HYDRANT	PWW	PAVED WATERWAY	VGC	VERTICAL GRANITE CURB				
CW	CROSSWALK	INV	INVERT	PZ	PIEZOMETER	VLT	VAULT				
DBWL	DOUBLE WHITE LINE	IP	IRON PIPE	R	RADIUS OF CURVATURE	WB	WESTBOUND				
DBYL	DOUBLE YELLOW LINE	JB	JERSEY BARRIER	RB	REBAR	WCR	WHEELCHAIR RAMP				
DEC	DECIDUOUS	L	LENGTH OF CURVE	RC	REINFORCED CONCRETE	WD	WOOD				
DH	DRILL HOLE	LB	LEACHING BASIN	RCP	REINFORCED CONCRETE PIPE	WIP	WROUGHT IRON PIPE				
DI	DROP INLET	LC	LAND COURT	RET	RETAINING						
DIA	DIAMETER	LCB	LAND COURT BOUND	RFA	RIVERFRONT AREA						

LEGEND

BF#	BANK FLAG	MW	MONITORING WELL	UPDL#	UTILITY POLE W/ DOUBLE LIGHT
BHL #	BORE HOLE	OIL	OIL FILL	UPL#	UTILITY POLE
	BUSH	OM	OTHER MANHOLE	VP	VENT PIPE
BM #	BENCHMARK	PB	PULL BOX	W	WATER MANHOLE
	BOUND (CONC, STONE, LAND COURT, ETC.)	PED	PEDESTRIAN SIGNAL	WG	WATER GATE
	CABLE MANHOLE		PHOTO CONTROL - H & V	WM	WATER METER
CB	CATCH BASIN - SQUARE		PHOTO CONTROL - V ONLY	WSO	WATER SHUTOFF
CB	CATCH BASIN - D-FRAME	PK	PK NAIL	WELL	WELL (POTABLE)
CB	CATCH BASIN - ROUND	PM	PARKING METER	WF#	WETLAND FLAG
DSK	DISK (CA/T, USC&GS, LAND COURT, ETC.)	POST	CIRCULAR POST	X–CUT	X-CUT
DH	DRILL HOLE	POST	SQUARE POST		
D	DRAIN MANHOLE	RB	REBAR/IRON PIN		
EHH	ELECTRIC HANDHOLE	RRS	RAILROAD SPIKE		
E	ELECTRIC MANHOLE	RRSG	RAILROAD SIGNAL		
EM	ELECTRIC METER	RRSW	RAILROAD SWITCH		
EPLP	ESCUTCHEON PIN IN LEAD PLUG	SN	STAKE AND NAIL		
FB	FLASHING BEACON	SP	STAND PIPE		
FES	FLARED END SECTION	S	SEWER MANHOLE		
FP	FLAG POLE	ST	STEAM MANHOLE		
GF	GAS FILL		STUMP		
GG	GAS GATE	TB	TOWN LINE BOUND (CORNER)		
GM	GAS METER	TCB	TRAFFIC SIGNAL CONTROL CABINET		
GP	GAS PUMP	T	TELEPHONE MANHOLE		
G	GAS MANHOLE	TFMR	TRANSFORMER		
GPL	GUY POLE	TLRS	TOWN LINE ROAD STONE		
	HANDICAP SYMBOL	TPIT #	TEST PIT		
	GUY WIRE ANCHOR	TPL	TROLLEY POLE		
HTP	HIGH TENSION POWER POLE		TRAVERSE POINT		
	FIRE HYDRANT	22"M	TREE		
IP	IRON PIPE	TS	TRAFFIC SIGNAL		
	LIGHT POLE	TS	TRAFFIC SIGNAL MAST ARM/SPAN WIRE POLE		
	LIGHT POLE DOUBLE LIGHT		SIGN		
MAG	MAG NAIL		SIGN - DOUBLE POST		
MB	MAIL BOX	UFB#	UTILITY POLE W/ FIRE PULL BOX		
MHB	MASSACHUSETTS HIGHWAY BOUND	ULT#	UTILITY POLE W/ LIGHT		

TREE SPECIES INDEX		
AA	AILANTHUS ALTISSIMA*	TREE–OF–HEAVEN
AP	ACER PLATANOIDES*	NORWAY MAPLE
AR	ACER RUBRUM	RED MAPLE
BP	BETULA POPULIFOLIA	GRAY BIRCH
MA	MALUS	CRAB APPLE
PR	PINUS RESINOSA	RED PINE
PS	PINUS STROBUS	EASTERN WHITE PINE
PV	PRUNUS VIRGINIANA	CHOKE CHERRY
QP	QUERCUS PALUSTRIS	PIN OAK
QR	QUERCUS RUBRA	NORTHERN RED OAK
RP	ROBINIA PSEUDOACACIA*	BLACK LOCUST
RT	RHUS TYPHINA	STAGHORN SUMAC
SB	SALIX BABYLONICA	WEEPING WILLOW
TO	THUJA OCCIDENTALIS	NORTHERN WHITE CEDAR
XX	SPECIMEN	UNABLE TO ID
	PHRAGMITES AUSTRALIS*	COMMON REED
	CELASTRUS ORBICULATUS*	ORIENTAL BITTERSWEET

NOTES:
* INCLUDED ON MASSDOT INVASIVE PLANT LIST

ID SITE VISIT 3/16/2017

GPI Greenman-Pedersen, Inc.
Engineers, Architects, Planners, Construction Engineers & Inspectors
181 Ballardvale Street, Suite 202, Wilmington, MA 01887
Tel: (978) 570-2999 Fax: (978) 658-3044
http://www.gpinet.com

COMMONWEALTH OF MASSACHUSETTS
JEFFREY P. BRADFORD # 41862
PROFESSIONAL LAND SURVEYOR
4/26/2017

PREPARED FOR
Groundwork Lawrence
50 Island Street
Lawrence, MA 01840

MANCHESTER-LAWRENCE RAIL TRAIL LAWRENCE, MA

REVISIONS		
NO.	REVISION	DATE
	APRIL 28, 2017	
DRAWN/DESIGN BY: FD	CHECKED BY: JPB	

SURVEY BASEPLAN

SCALE: 1"=20'

SHEET #

1 OF 20

Proposal No. 608930-128034

A00860 - 416

16194_SV (2D PLUS SURFACE FEATURES).DWG 3/16/2017

Proposal No. 608930-128034

GPI Greenman-Pedersen, Inc.
Engineers, Architects, Planners, Construction Engineers & Inspectors
181 Ballardvale Street, Suite 202, Wilmington, MA 01887
Tel: (978) 570-2999 Fax: (978) 658-3044
http://www.gpinet.com

COMMONWEALTH OF MASSACHUSETTS
JEFFREY P. BRADFORD #41862
PROFESSIONAL LAND SURVEYOR
4/28/2017

PREPARED FOR
Groundwork Lawrence
50 Island Street
Lawrence, MA 01840

MANCHESTER-LAWRENCE RAIL TRAIL LAWRENCE, MA

REVISIONS		
NO.	REVISION	DATE

APRIL 28, 2017
DRAWN/DESIGN BY: FD
CHECKED BY: JPB

SURVEY BASEPLAN
SCALE: 1"=20'
SHEET # 2 OF 20

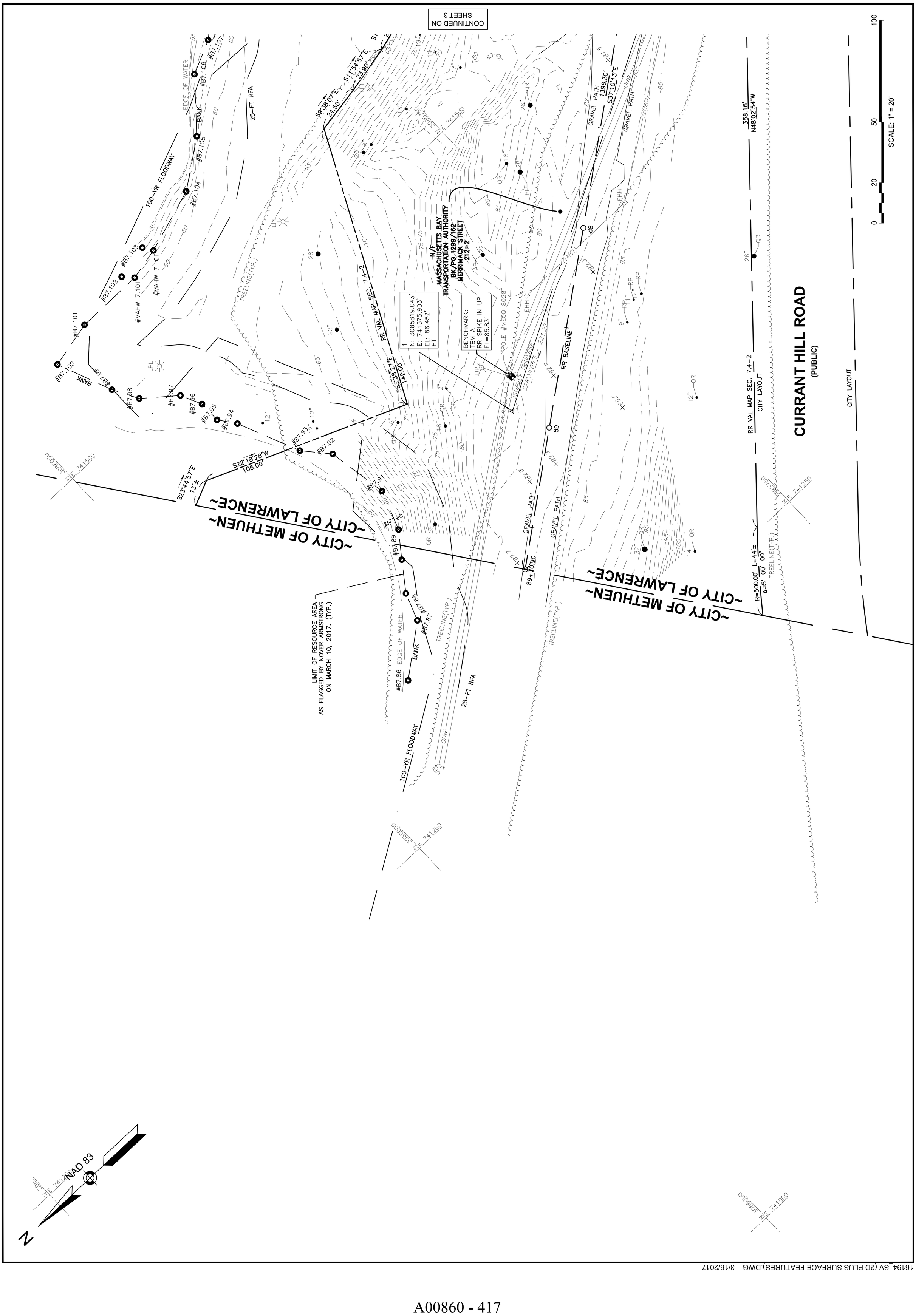

16194_SV (2D PLUS SURFACE FEATURES).DWG 3/16/2017

GPI Greenman-Pedersen, Inc.
Engineers, Architects, Planners, Construction Engineers & Inspectors
181 Ballardvale Street, Suite 202, Wilmington, MA 01887
Tel: (978) 570-2999 Fax: (978) 658-3044
http://www.gpinet.com

COMMONWEALTH OF MASSACHUSETTS
JEFFREY P. BRADFORD
41862
PROFESSIONAL LAND SURVEYOR
4/26/2017

PREPARED FOR
Groundwork Lawrence
50 Island Street
Lawrence, MA 01840

MANCHESTER-LAWRENCE RAIL TRAIL LAWRENCE, MA

Proposal No. 608930-128034

A00860 - 418

16194_SV (2D PLUS SURFACE FEATURES).DWG 3/16/2017

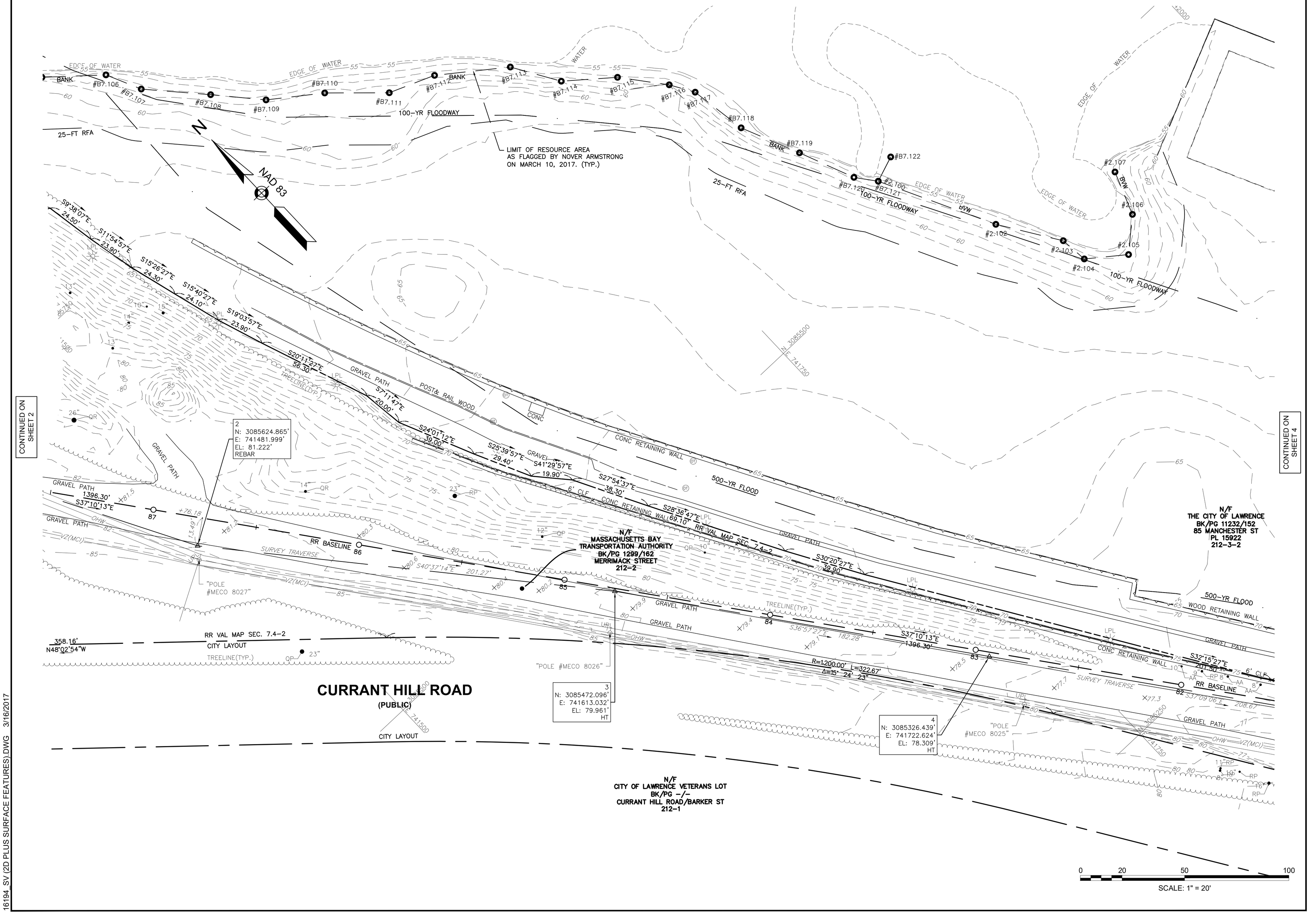

REVISIONS		
NO.	REVISION	DATE
	APRIL 28, 2017	

DRAWN/DESIGN BY	CHECKED BY
FD	JPB

SURVEY BASEPLAN

SCALE: 1"=20'

SHEET #

3 OF 20

GPI Greenman-Pedersen, Inc.
Engineers, Architects, Planners, Construction Engineers & Inspectors
181 Ballardvale Street, Suite 202, Wilmington, MA 01887
Tel: (978) 570-2999 Fax: (978) 658-3044
http://www.gpinet.com

COMMONWEALTH OF MASSACHUSETTS
JEFFREY P. BRADFORD # 41862 PROFESSIONAL LAND SURVEYOR
4/26/2017

PREPARED FOR
Groundwork Lawrence
50 Island Street
Lawrence, MA 01840

MANCHESTER-LAWRENCE RAIL TRAIL LAWRENCE, MA

Proposal No. 608930-128034

REVISIONS		
NO.	REVISION	DATE

APRIL 28, 2017

DRAWN/DESIGN BY	CHECKED BY
FD	JPB

SURVEY BASEPLAN

SCALE: 1"=20'

SHEET # 4 OF 20

CONTINUED ON SHEET 3

CONTINUED ON SHEET 5

N/F
THE CITY OF LAWRENCE
BK/PG 11232/152
85 MANCHESTER ST
PL 15922
212-3-2

N/F
LA FRUTERIA SUPERMARKET AND WHOLESALE, INC.
BK/PG 11238/344
85 MANCHESTER ST
PL 15922
212-3-1

N/F
MASSACHUSETTS BAY TRANSPORTATION AUTHORITY
BK/PG 1299/162
MERRIMACK STREET
212-2

N/F
CITY OF LAWRENCE VETERANS LOT
BK/PG -/-
CURRANT HILL ROAD/BARKER ST
212-1

CURRANT HILL (PUBLIC)

BARKER STREET (PUBLIC)

CITY LAYOUT

RR VAL MAP SEC. 7.4-2

RR BASELINE

100-YR FLOODWAY

500-YR FLOOD

EDGE OF WATER

GRAVEL PATH

WOOD RETAINING WALL

POST & RAIL WOOD

6' CLF

3' CONC RETAINING WALL

10' STEAMLINE EASEMENT BK/PG 1581/11

STONE RETAINING WALL

TREELINE(TYP.)

SURVEY TRAVERSE

Approx. Location of Test Pit Observed by TRC 7/18/2017

TP-1

5
N: 3085160.121'
E: 741848.645'
EL: 76.024'
HT

6
N: 3085017.086'
E: 741956.147'
EL: 74.450'
HT

7
N: 3084847.269'
E: 742068.397'
EL: 73.814'
HT

BENCHMARK:
TBM B
RR SPIKE IN UP
EL=79.10'

"POLE #MECO 8024"

"POLE #MECO 8023"

"POLE #MECO 8022"

SMH
RIM=63.01
INV.(a)=57.21
INV.(b)=57.21
INV.(c)=59.41
INV.(d)=56.51

"KEEP RIGHT (RIGHT ARROW)"

"CITY OF LAWRENCE ..."

MULCH

S32°15'27"E 207.50'
S35°52'17"E 142.26'
S37°40'13"E 1396.30'
S36°59'57"E 96.81'
S36°59'57"E 160.05'
S32°38'31"E 213.47'
S33°27'54"E 203.56'
S38°04'15"E 104.69'
R=500.00' L=22.72'
Δ=2° 36' 12"
S40°40'27"E 103.92'
S34°38'38"E 60.00'
S34°38'38"E 132.60'
S37°10'13"E 1396.30'
S37°10'13"E 120.22'
N53°00'03"E 12.50'
N53°00'03"E 12.63'

N 3085250 E 741750
N 3085000 E 741750
N 3085000 E 742000
N 3084750 E 742000

0 20 50 100
SCALE: 1" = 20'

GPI Greenman-Pedersen, Inc.
Engineers, Architects, Planners, Construction Engineers & Inspectors
181 Ballardvale Street, Suite 202, Wilmington, MA 01887
Tel: (978) 570-2999 Fax: (978) 658-3044
http://www.gpinet.com

COMMONWEALTH OF MASSACHUSETTS
JEFFREY P. BRADFORD # 41862 PROFESSIONAL LAND SURVEYOR
4/26/2017

PREPARED FOR
Groundwork Lawrence
50 Island Street
Lawrence, MA 01840

MANCHESTER-LAWRENCE RAIL TRAIL
LAWRENCE, MA

Proposal No. 608930-128034

A00860 - 420

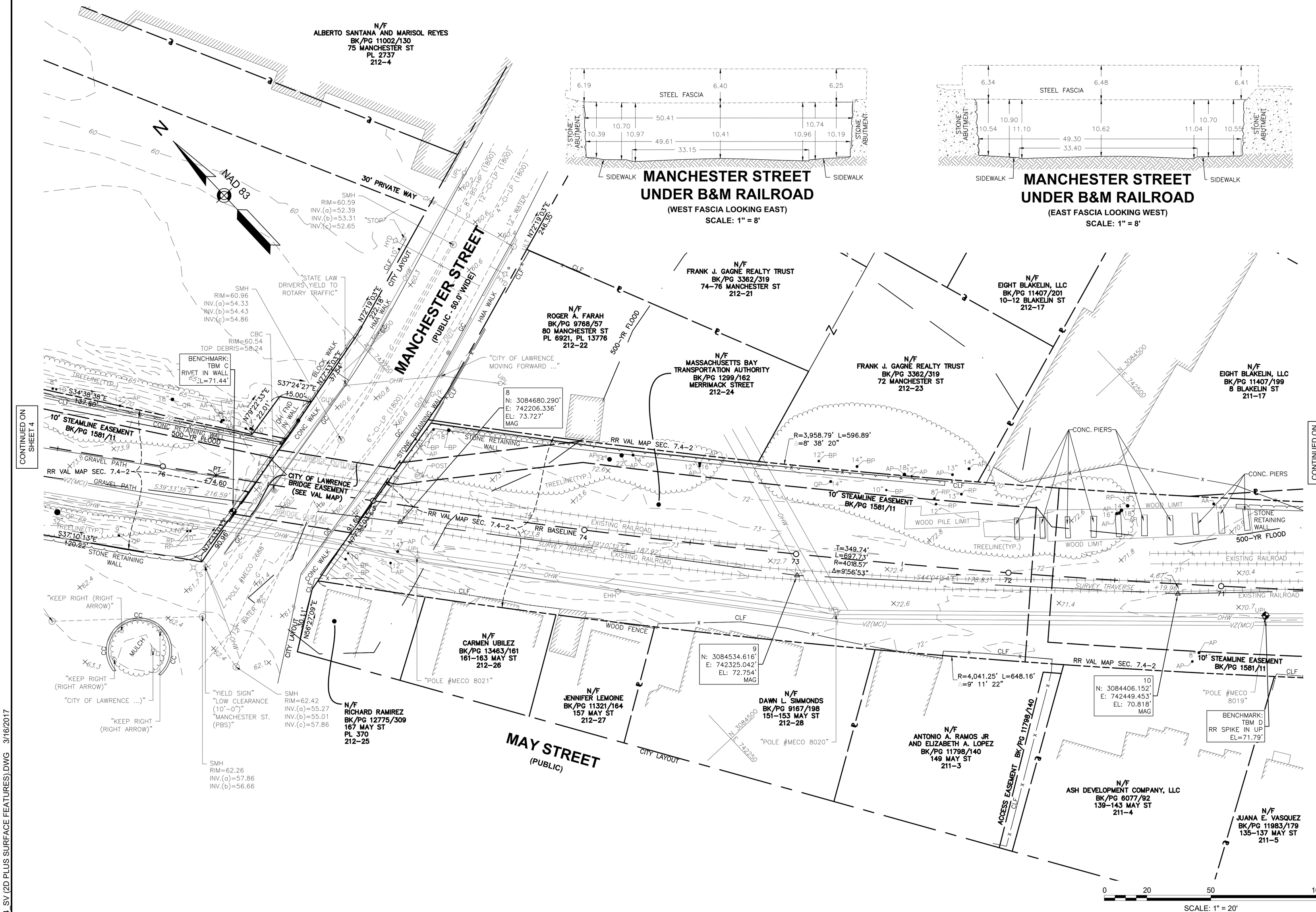

REVISIONS

NO.	REVISION	DATE

APRIL 28, 2017

DRAWN/DESIGN BY	CHECKED BY
FD	JPB

SURVEY BASEPLAN

SCALE: 1"=20'

SHEET # 5 OF 20

16194_SV (2D PLUS SURFACE FEATURES).DWG 3/16/2017

GPI Greenman-Pedersen, Inc.
Engineers, Architects, Planners, Construction Engineers & Inspectors
181 Ballardvale Street, Suite 202, Wilmington, MA 01887
Tel: (978) 570-2999 Fax: (978) 658-3044
http://www.gpinet.com

COMMONWEALTH OF MASSACHUSETTS
JEFFREY P. BRADFORD # 41862
PROFESSIONAL LAND SURVEYOR
4/28/2017

PREPARED FOR
Groundwork Lawrence
50 Island Street
Lawrence, MA 01840

MANCHESTER-LAWRENCE RAIL TRAIL LAWRENCE, MA

REVISIONS		
NO.	REVISION	DATE

APRIL 28, 2017
DRAWN/DESIGN BY: FD
CHECKED BY: JPB

SURVEY BASEPLAN

SCALE: 1"=20'
SHEET # 6 OF 20

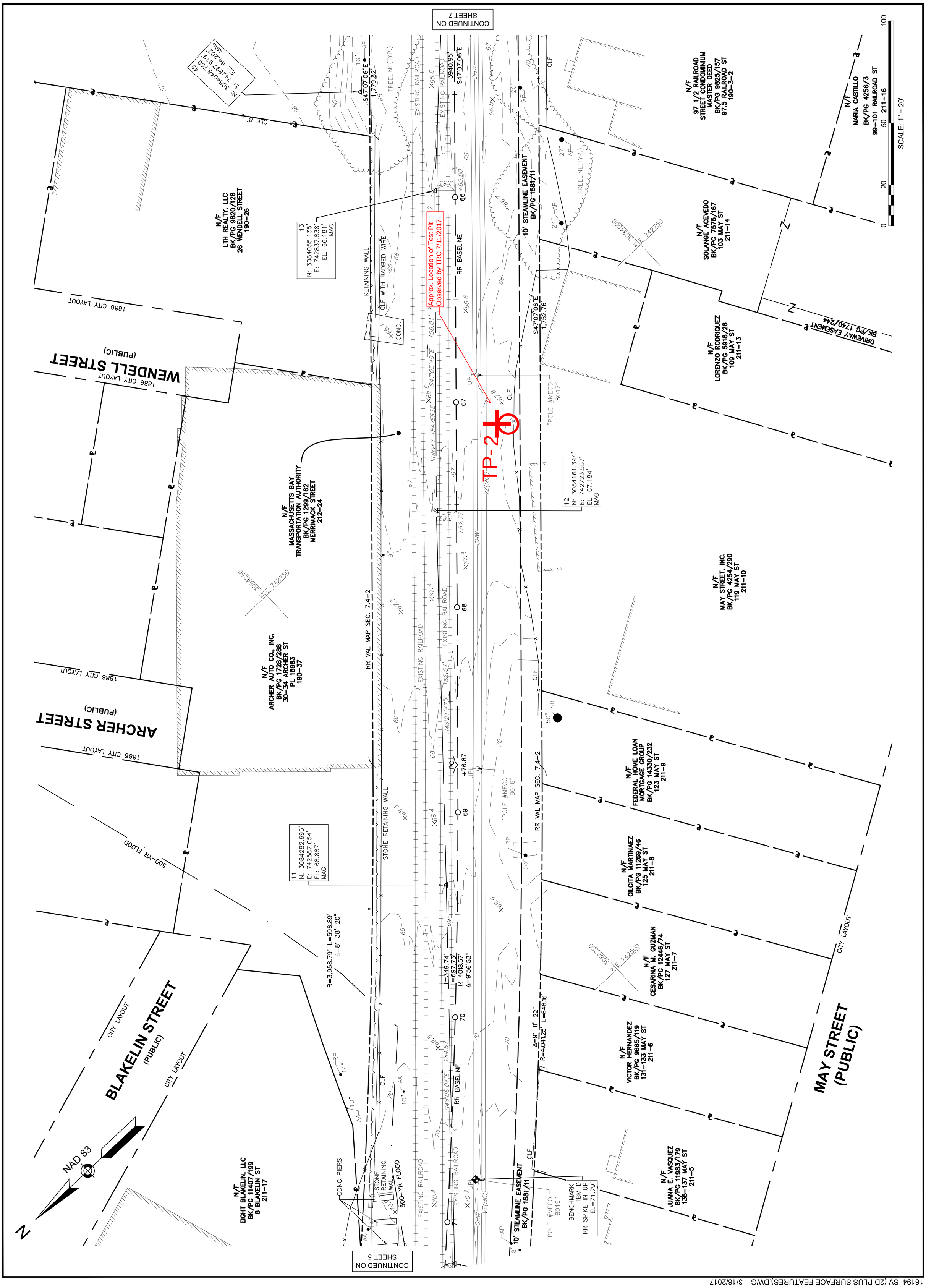

16194_SV (2D PLUS SURFACE FEATURES).DWG 3/16/2017

NAD 83

44
N: 3084085.193'
E: 743087.123'
EL: 56.839'
MAG

45
N: 3084048.750'
E: 742897.919'
EL: 64.202'
MAG

BOURGOIN PARK

N/F
CITY OF LAWRENCE
(SERGEANT LUCIEN E. BOUGON PARK)
BK/PG 581/323
BK/PG 650/548
WEST STREET
190–18

N/F
J. P. REALTY TRUST
BK/PG 2915/56
142 WEST STREET
190–17

N/F
130–136 WEST STREET, LLC
CERT# 15412
WEST STREET
190–15

14
N: 3083922.963'
E: 742968.618'
EL: 64.994'
MAG

46
N: 3083949.420'
E: 743042.133'
EL: 58.760'
HT

15
N: 3083802.262'
E: 743098.613'
EL: 63.510'
MAG

16
N: 3083679.539'
E: 743236.169'
EL: 62.172'
HT

Approx. Location of Test Pit Observed by TRC 7/11/2017

TP-3

RR VAL MAP SEC. 7.4–2

S47°07'06"E 1,779.32'

S47°07'06"E 3940.95'

S47°07'06"E 1,752.76'

RR BASELINE

65 64 63 62 61 60

BENCHMARK:
TBM E
RR SPIKE IN UP
EL=65.58'

"POLE #MECO 8015"

"POLE #MECO 8016"

"POLE #MECO 8014"

10' STEAMLINE EASEMENT
BK/PG 1581/11

EXISTING RAILROAD

TREELINE(TYP.)

CLF 6'

CLF 18'

EOP

1945 CITY LAYOUT

CITY LAYOUT

N/F
97 1/2 RAILROAD STREET CONDOMINIUM MASTER DEED
BK/PG 9825/157
97.5 RAILROAD ST
190–3–2

N/F
TERESA GONZALEZ
BK/PG 11536/131
97 RAILROAD ST
190–4

N/F
MARIA VENTURA
BK/PG 11988/44
91–93 RAILROAD ST
190–5

N/F
HECTOR R. CID AND ALTAGRACIA CID
BK/PG 13837/207
89 RAILROAD ST
190–6

N/F
JOSHUA V ARIAS
BK/PG 12921/222
83–87 RAILROAD ST
190–7

N/F
ARMAND ST. PIERRE
BK/PG 13909/236
81 RAILROAD ST
190–8

N/F
MASSACHUSETTS BAY TRANSPORTATION AUTHORITY
BK/PG 1299/162
MERRIMACK STREET
212–24

N/F
57–71 RAILROAD STREET CONDOMINIUM MASTER DEED
BK/PG 3301/42
57–71 RAILROAD STREET
189–1

N/F
JOHN SHEA CO
BK/PG –/–
RAILROAD STREET
189–44

N/F
JACQUES OUELLET AND LOUISE OUELLET
BK/PG 1341/440
55 RAILROAD ST
189–46

N/F
MARIA CASTILLO
BK/PG 4256/3
99–101 RAILROAD ST
211–16

RAILROAD STREET
(PUBLIC)

0 20 50 100
SCALE: 1" = 20'

16194_SV (2D PLUS SURFACE FEATURES).DWG 3/16/2017

GPI Greenman-Pedersen, Inc.
Engineers, Architects, Planners, Construction Engineers & Inspectors
181 Ballardvale Street, Suite 202, Wilmington, MA 01887
Tel: (978) 570-2999 Fax: (978) 658-3044
http://www.gpinet.com

COMMONWEALTH OF MASSACHUSETTS
JEFFREY P. BRADFORD # 41862
REGISTERED PROFESSIONAL LAND SURVEYOR
4/26/2017

PREPARED FOR
Groundwork Lawrence
50 Island Street
Lawrence, MA 01840

MANCHESTER-LAWRENCE RAIL TRAIL LAWRENCE, MA

Proposal No. 608930-128034

REVISIONS		
NO.	REVISION	DATE

APRIL 28, 2017

DRAWN/DESIGN BY	CHECKED BY
FD	JPB

SURVEY BASEPLAN

SCALE: 1"=20'

SHEET #

7 OF 20

GPI Greenman-Pedersen, Inc.
Engineers, Architects, Planners, Construction Engineers & Inspectors
181 Ballardvale Street, Suite 202, Wilmington, MA 01887
Tel: (978) 570-2999 Fax: (978) 658-3044
http://www.gpinet.com

COMMONWEALTH OF MASSACHUSETTS
JEFFREY P. BRADFORD #41862
PROFESSIONAL LAND SURVEYOR
4/28/2017

PREPARED FOR
Groundwork Lawrence
50 Island Street
Lawrence, MA 01840

MANCHESTER-LAWRENCE RAIL TRAIL LAWRENCE, MA

REVISIONS		
NO.	REVISION	DATE

APRIL 28, 2017
DRAWN/DESIGN BY: FD
CHECKED BY: JPB

SURVEY BASEPLAN

SCALE: 1"=20'
SHEET # 8 OF 20

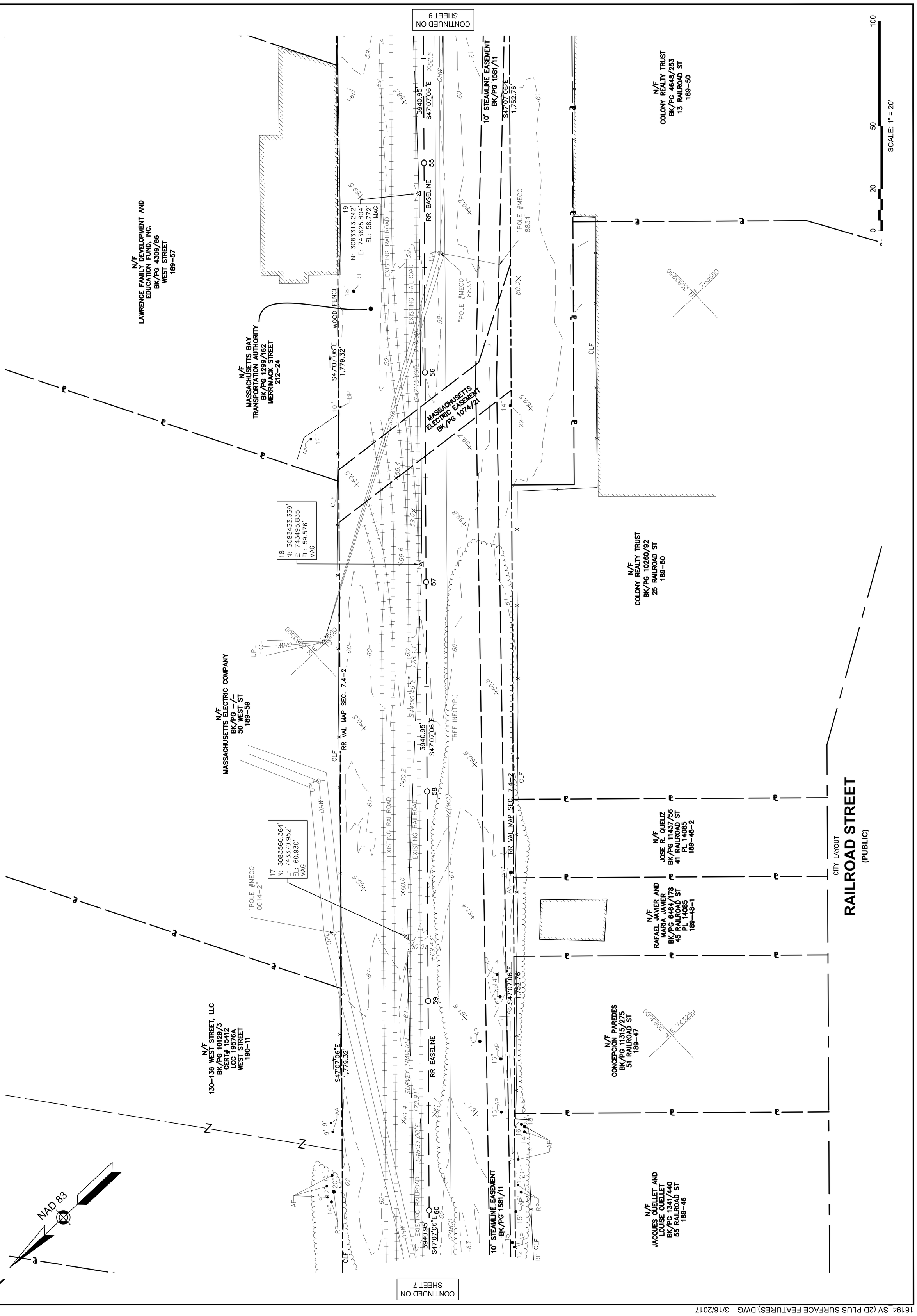

16194_SV (2D PLUS SURFACE FEATURES).DWG 3/16/2017

GPI Greenman-Pedersen, Inc.
Engineers, Architects, Planners, Construction Engineers & Inspectors
181 Ballardvale Street, Suite 202, Wilmington, MA 01887
Tel: (978) 570-2999 Fax: (978) 658-3044
http://www.gpinet.com

COMMONWEALTH OF MASSACHUSETTS
JEFFREY P. BRADFORD # 41862
PROFESSIONAL LAND SURVEYOR
4/28/2017

PREPARED FOR
Groundwork Lawrence
50 Island Street
Lawrence, MA 01840

MANCHESTER-LAWRENCE RAIL TRAIL LAWRENCE, MA

REVISIONS		
NO.	REVISION	DATE

APRIL 28, 2017
DRAWN/DESIGN BY: FD
CHECKED BY: JPB

SURVEY BASEPLAN

SCALE: 1"=20'
SHEET # 9 OF 20

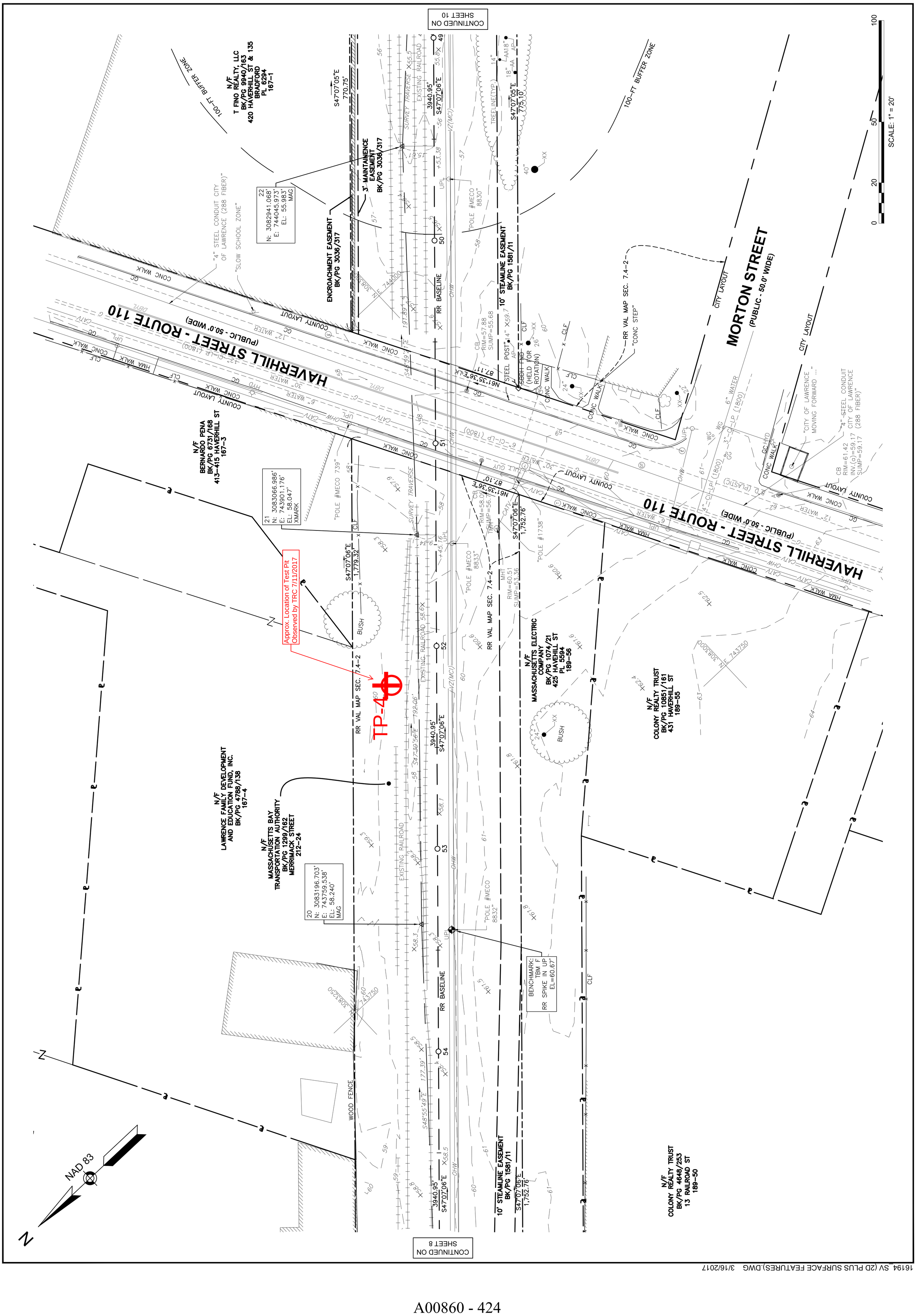

16194_SV (2D PLUS SURFACE FEATURES).DWG 3/16/2017

GPI Greenman-Pedersen, Inc.
Engineers, Architects, Planners, Construction Engineers & Inspectors
181 Ballardvale Street, Suite 202, Wilmington, MA 01887
Tel: (978) 570-2999 Fax: (978) 658-3044
http://www.gpinet.com

COMMONWEALTH OF MASSACHUSETTS
JEFFREY P. BRADFORD # 41862 PROFESSIONAL LAND SURVEYOR
4/26/2017

PREPARED FOR
Groundwork Lawrence
50 Island Street
Lawrence, MA 01840

MANCHESTER-LAWRENCE RAIL TRAIL
LAWRENCE, MA

Proposal No. 608930-128034

A00860 - 425

OLIVER PLACE (PRIVATE)
OLIVER PLACE (PRIVATE)
CLYDE LANE (PRIVATE)
100-FT BUFFER ZONE
N/F CITY OF LAWRENCE BK/PG 10095/356 8 BRADFORD PLACE 166-41
N/F MONICAH MARSH BK/PG 14131/253 10-14 BRADFORD PLACE 166-40
N/F T FINO REALTY, LLC BK/PG 9940/163 420 HAVERHILL ST & 135 BRADFORD PL 6294 167-1
N/F 283 LOWELL STREET LAWRENCE, LLC BK/PG 12763/126 283 LOWELL ST 166-31
ENCROACHMENT EASEMENT BK/PG 3036/317
3' MAINTAINENCE EASEMENT BK/PG 3036/317
NAD 83
23 N: 3082801.640' E: 744183.031' EL: 54.419' MAG
25 N: 3082537.146' E: 744471.239' EL: 52.147' MAG
24 N: 3082659.332' E: 744336.078' EL: 52.988' MAG
S47°07'05"E 770.75'
S47°07'05"E 775.10'
3940.95' S47°07'06"E
RR VAL MAP SEC. 7.4-2
RR VAL MAP SEC. 7.4-1
RR BASELINE
STONE RETAINING WALL
EXISTING RAILROAD
SURVEY TRAVERSE
S44°30'32"E 195.51'
S47°04'56"E 208.99'
S47°58'12"E 182.26'
10' STEAMLINE EASEMENT BK/PG 1581/11
LIMIT OF RESOURCE AREA AS FLAGGED BY NOVER ARMSTRONG ON MARCH 10, 2017. (TYP.)
CONTINUED ON SHEET 9
CONTINUED ON SHEET 11
N/F LAWRENCE HOUSING AUTHORITY BK/PG -/- 33-47 MORTON ST 166-18
N/F DAKE, LLC BK/PG 9501/326 27-31 MORTON ST PL 4418 166-19
N/F JEAN GAGNON BK/PG 1148/332 17 MORTON ST 166-21
N/F MASSACHUSETTS BAY TRANSPORTATION AUTHORITY BK/PG 1299/162 HAVERHILL STREET 167-2
N/F DAVID R. SIROIS BK/PG 5429/177 291 LOWELL ST PL 1011 166-29
PASSAGEWAY
CITY LAYOUT
MORTON STREET
(PUBLIC - 50.0' WIDE)
N: 3082750 E: 744000
N: 3082500 E: 744250
BRIDGE #3001
SCALE: 1" = 20'

REVISIONS		
NO.	REVISION	DATE

APRIL 28, 2017

DRAWN/DESIGN BY	CHECKED BY
FD	JPB

SURVEY BASEPLAN

SCALE: 1"=20'

SHEET # 10 OF 20

16194_SV (2D PLUS SURFACE FEATURES).DWG 3/16/2017

GPI Greenman-Pedersen, Inc.
Engineers, Architects, Planners, Construction Engineers & Inspectors
181 Ballardvale Street, Suite 202, Wilmington, MA 01887
Tel: (978) 570-2999 Fax: (978) 658-3044
http://www.gpinet.com

COMMONWEALTH OF MASSACHUSETTS
JEFFREY P. BRADFORD # 41862 PROFESSIONAL LAND SURVEYOR
4/26/2017

PREPARED FOR
Groundwork Lawrence
50 Island Street
Lawrence, MA 01840

MANCHESTER-LAWRENCE RAIL TRAIL LAWRENCE, MA

Proposal No. 608930-128034

REVISIONS		
NO.	REVISION	DATE
	APRIL 28, 2017	
DRAWN/DESIGN BY: FD		CHECKED BY: JPB

SURVEY BASEPLAN

SCALE: 1"=20'

SHEET # 11 OF 20

A00860 - 426

16194_SV (2D PLUS SURFACE FEATURES).DWG 3/16/2017

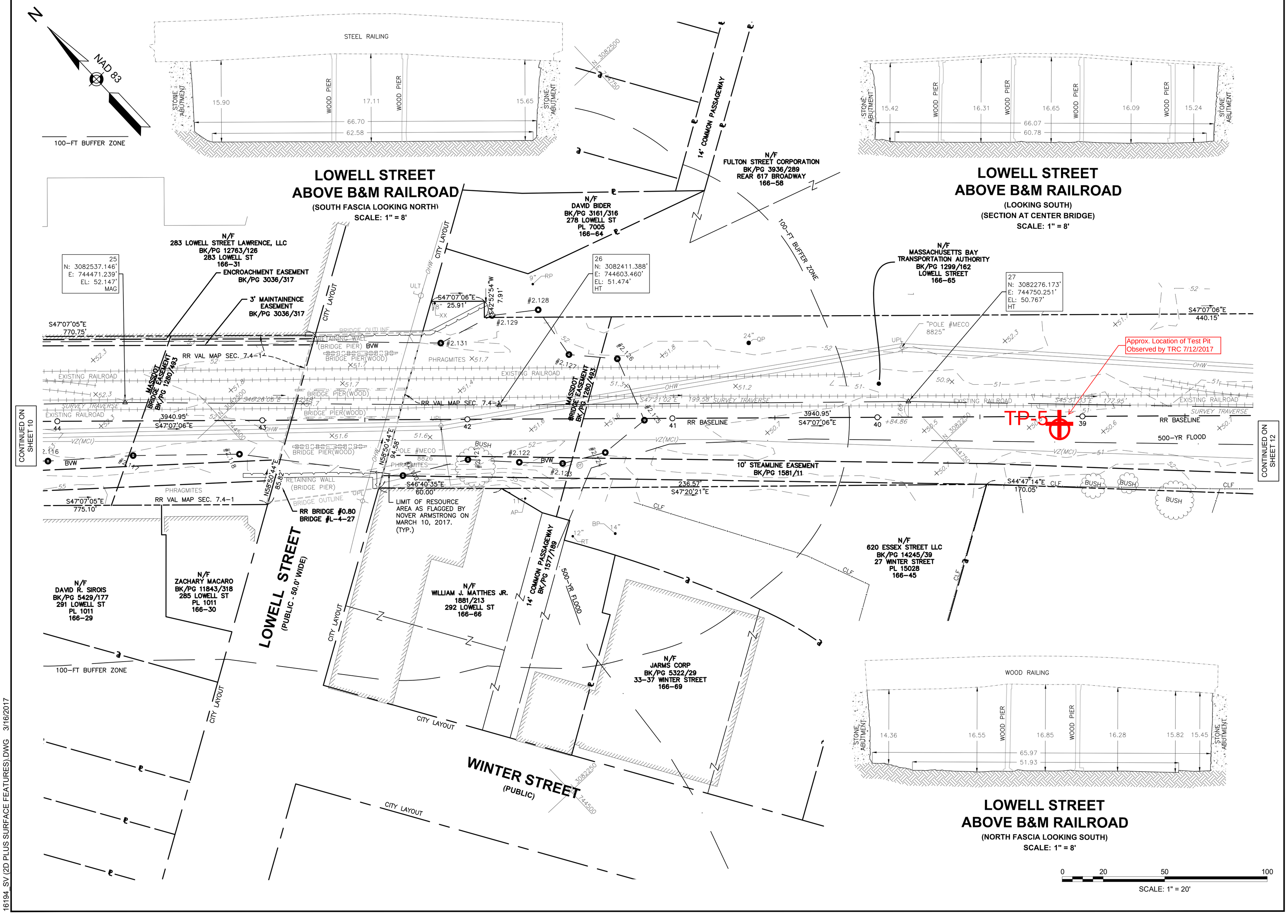

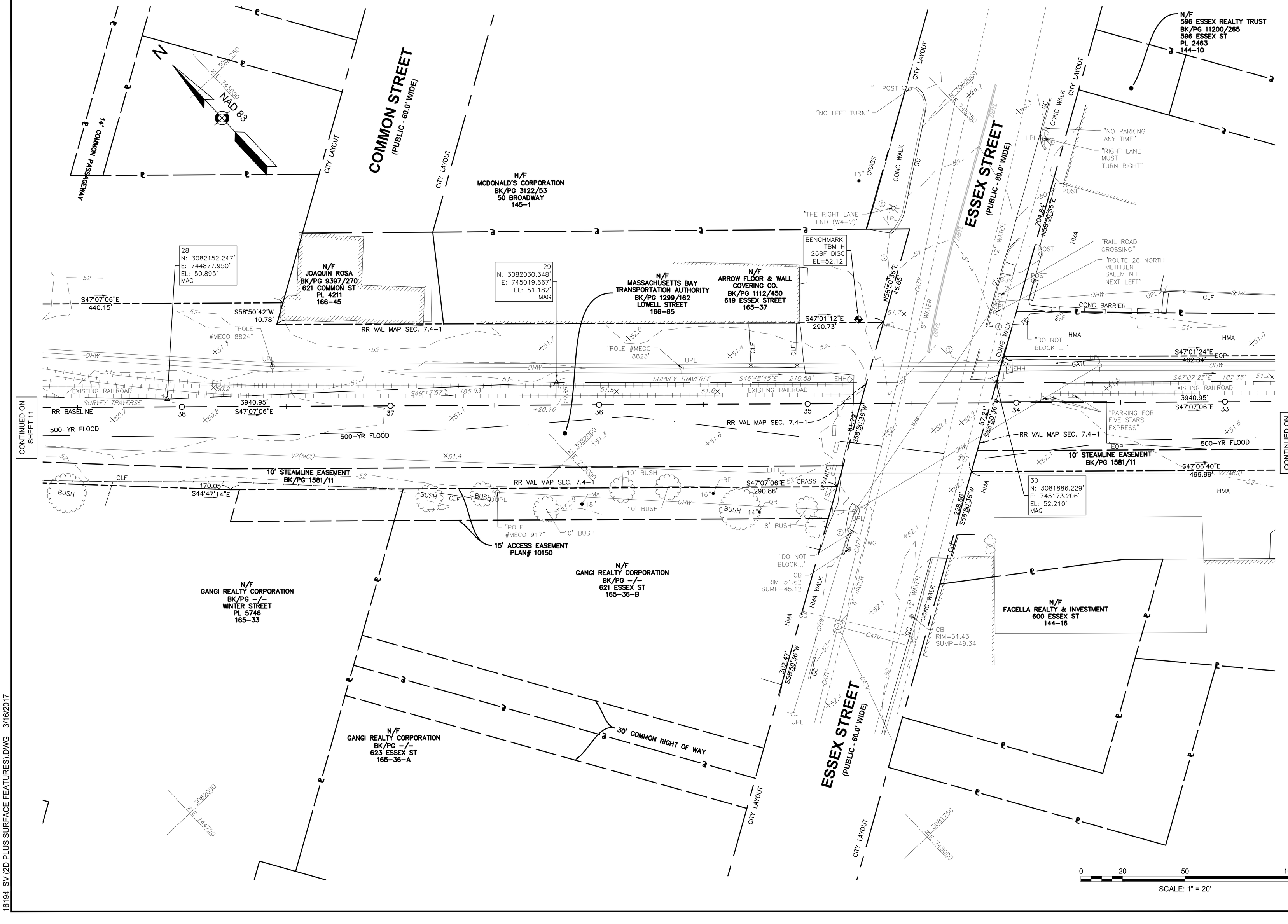

GPI Greenman-Pedersen, Inc.
Engineers, Architects, Planners, Construction Engineers & Inspectors
181 Ballardvale Street, Suite 202, Wilmington, MA 01887
Tel: (978) 570-2999 Fax: (978) 658-3044
http://www.gpinet.com

COMMONWEALTH OF MASSACHUSETTS
JEFFREY P. BRADFORD # 41862 PROFESSIONAL LAND SURVEYOR
4/26/2017

PREPARED FOR
Groundwork Lawrence
50 Island Street
Lawrence, MA 01840

MANCHESTER-LAWRENCE RAIL TRAIL LAWRENCE, MA

REVISIONS		
NO.	REVISION	DATE
	APRIL 28, 2017	
DRAWN/DESIGN BY: FD		CHECKED BY: JPB

SURVEY BASEPLAN

SCALE: 1"=20'

SHEET # 12 OF 20

A00860 - 427

16194_SV (2D PLUS SURFACE FEATURES).DWG 3/16/2017

Proposal No. 608930-128034

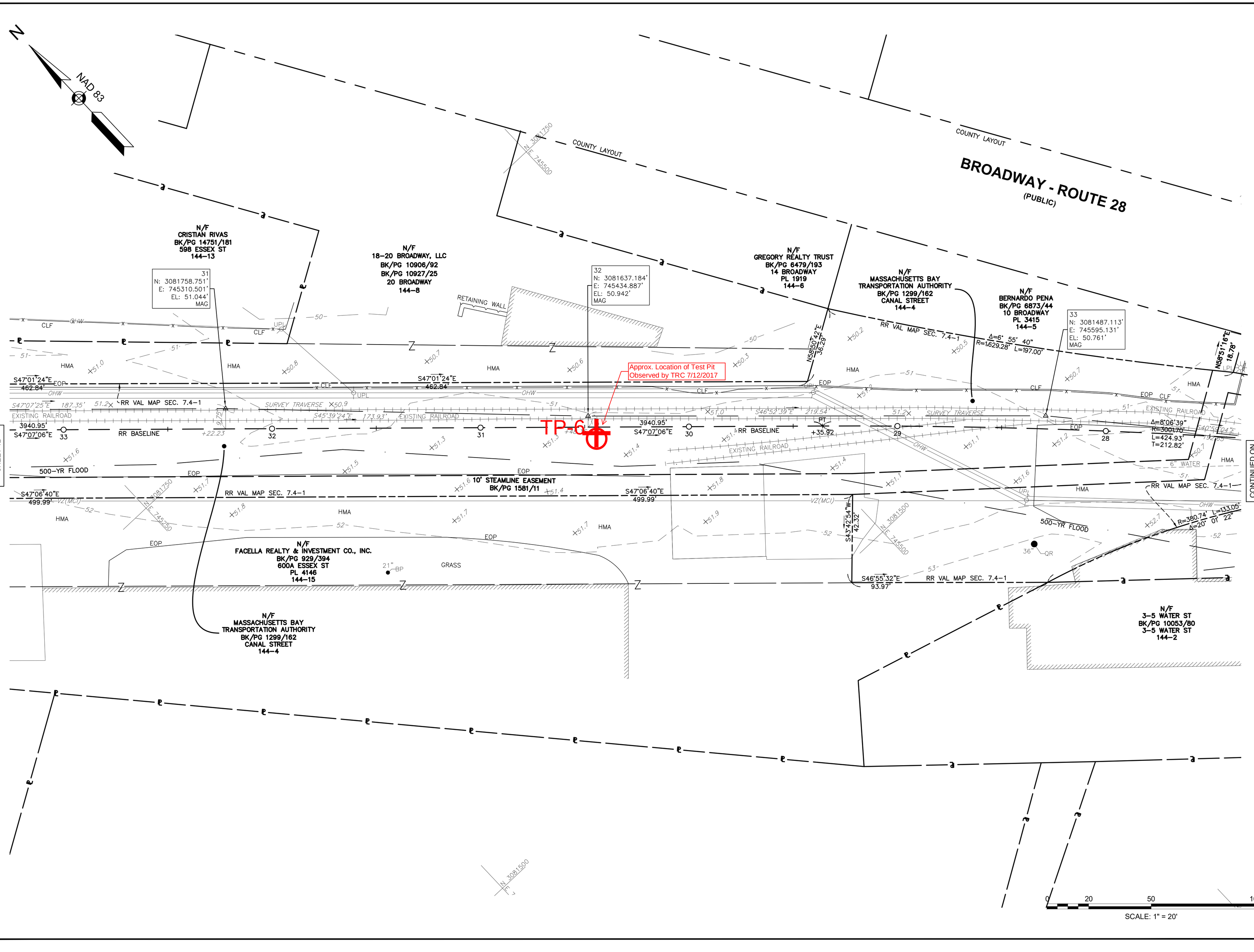

GPI Greenman-Pedersen, Inc.
Engineers, Architects, Planners, Construction Engineers & Inspectors
181 Ballardvale Street, Suite 202, Wilmington, MA 01887
Tel: (978) 570-2999 Fax: (978) 658-3044
http://www.gpinet.com

COMMONWEALTH OF MASSACHUSETTS
JEFFREY P. BRADFORD
41862
REGISTERED PROFESSIONAL LAND SURVEYOR
4/26/2017

PREPARED FOR
Groundwork Lawrence
50 Island Street
Lawrence, MA 01840

MANCHESTER-LAWRENCE RAIL TRAIL
LAWRENCE, MA

REVISIONS		
NO.	REVISION	DATE
	APRIL 28, 2017	

DRAWN/DESIGN BY	CHECKED BY
FD	JPB

SURVEY BASEPLAN

SCALE: 1"=20'

SHEET # 13 OF 20

Proposal No. 608930-128034

A00860 - 428

16194_SV (2D PLUS SURFACE FEATURES).DWG 3/16/2017

GPI Greenman-Pedersen, Inc.
Engineers, Architects, Planners, Construction Engineers & Inspectors
181 Ballardvale Street, Suite 202, Wilmington, MA 01887
Tel: (978) 570-2999 Fax: (978) 658-3044
http://www.gpinet.com

COMMONWEALTH OF MASSACHUSETTS
JEFFREY P. BRADFORD # 41862
PROFESSIONAL LAND SURVEYOR
4/28/2017

PREPARED FOR
Groundwork Lawrence
50 Island Street
Lawrence, MA 01840

MANCHESTER-LAWRENCE RAIL TRAIL LAWRENCE, MA

REVISIONS		
NO.	REVISION	DATE

APRIL 28, 2017
DRAWN/DESIGN BY: FD
CHECKED BY: JPB

SURVEY BASEPLAN
SCALE: 1"=20'
SHEET # 14 OF 20

CONTINUED ON SHEET 15

SCALE: 1" = 20'
0 20 50 100

CONTINUED ON SHEET 13

16194_SV (2D PLUS SURFACE FEATURES).DWG 3/16/2017

GPI Greenman-Pedersen, Inc.
Engineers, Architects, Planners, Construction Engineers & Inspectors
181 Ballardvale Street, Suite 202, Wilmington, MA 01887
Tel: (978) 570-2999 Fax: (978) 658-3044
http://www.gpinet.com

COMMONWEALTH OF MASSACHUSETTS
JEFFREY P. BRADFORD # 41862
PROFESSIONAL LAND SURVEYOR
4/28/2017

PREPARED FOR
Groundwork Lawrence
50 Island Street
Lawrence, MA 01840

MANCHESTER-LAWRENCE RAIL TRAIL LAWRENCE, MA

REVISIONS			
NO.	REVISION	DATE	

GPI Greenman-Pedersen, Inc.
Engineers, Architects, Planners, Construction Engineers & Inspectors
181 Ballardvale Street, Suite 202, Wilmington, MA 01887
Tel: (978) 570-2999 Fax: (978) 658-3044
http://www.gpinet.com

COMMONWEALTH OF MASSACHUSETTS
JEFFREY P. BRADFORD #41862
PROFESSIONAL LAND SURVEYOR
4/28/2017

PREPARED FOR
Groundwork Lawrence
50 Island Street
Lawrence, MA 01840

MANCHESTER-LAWRENCE RAIL TRAIL LAWRENCE, MA

REVISIONS		
NO.	REVISION	DATE

APRIL 28, 2017
DRAWN/DESIGN BY: FD
CHECKED BY: JPB

SURVEY BASEPLAN
SCALE: 1"=20'
SHEET # 16 OF 20

CONTINUED ON SHEET 17

SCALE: 1" = 20'

MERRIMACK STREET (ROUTE 114) (PUBLIC 60.0' WIDE)

SOUTH CANAL

SOUTH BROADWAY (ROUTE 28) (PUBLIC 66.0' WIDE)

TP8

Approx. Location of Test Pit Observed by TRC 7/13/2017

CONTINUED ON SHEET 15

GPI Greenman-Pedersen, Inc.
Engineers, Architects, Planners, Construction Engineers & Inspectors
181 Ballardvale Street, Suite 202, Wilmington, MA 01887
Tel: (978) 570-2999 Fax: (978) 658-3044
http://www.gpinet.com

COMMONWEALTH OF MASSACHUSETTS
JEFFREY P. BRADFORD # 41862
PROFESSIONAL LAND SURVEYOR
4/28/2017

PREPARED FOR
Groundwork Lawrence
50 Island Street
Lawrence, MA 01840

MANCHESTER-LAWRENCE RAIL TRAIL LAWRENCE, MA

REVISIONS		
NO.	REVISION	DATE

APRIL 28, 2017
DRAWN/DESIGN BY: FD
CHECKED BY: JPB

SURVEY BASEPLAN

SCALE: 1"=20'
SHEET # 17 OF 20

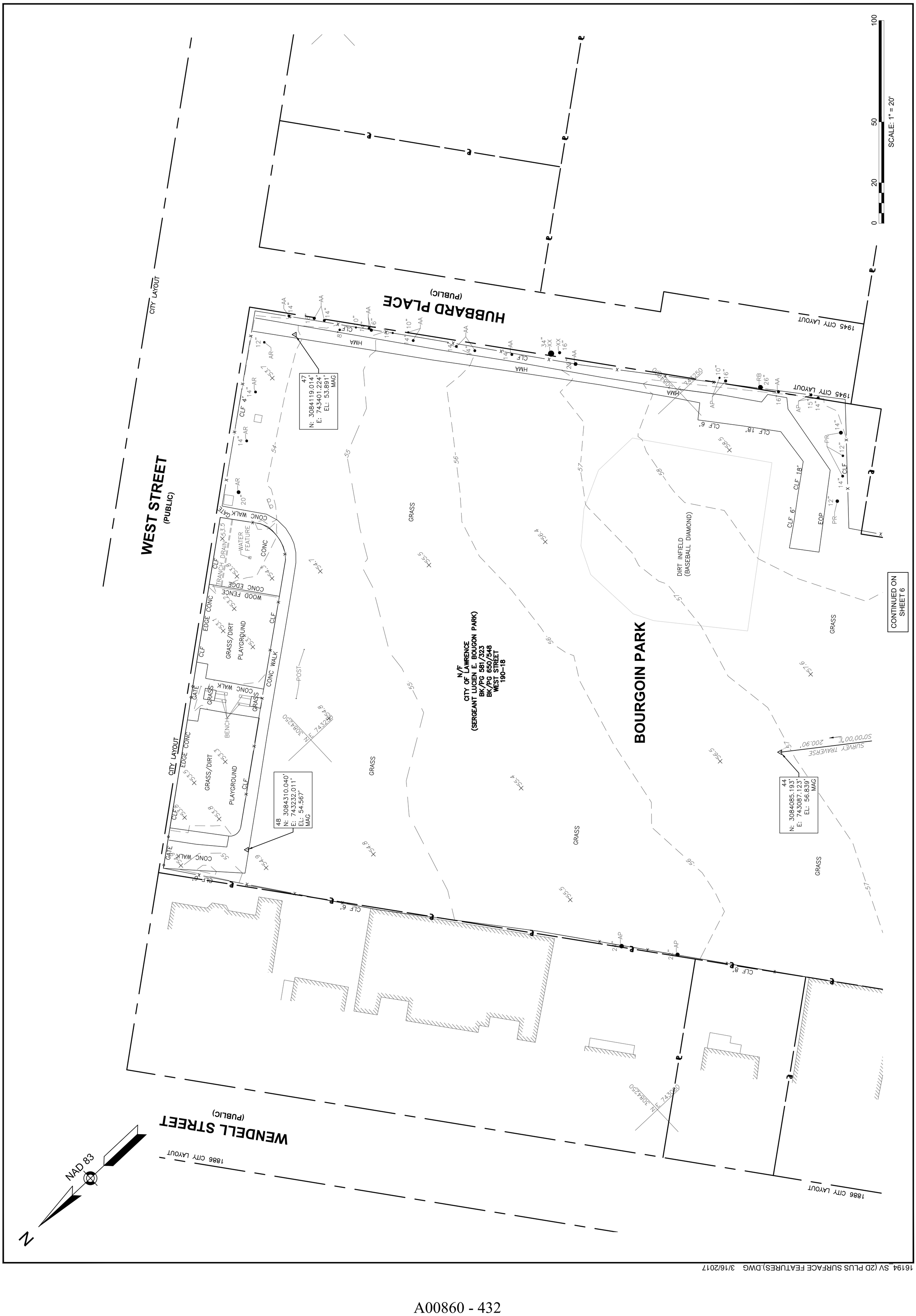

16194_SV (2D PLUS SURFACE FEATURES).DWG 3/16/2017

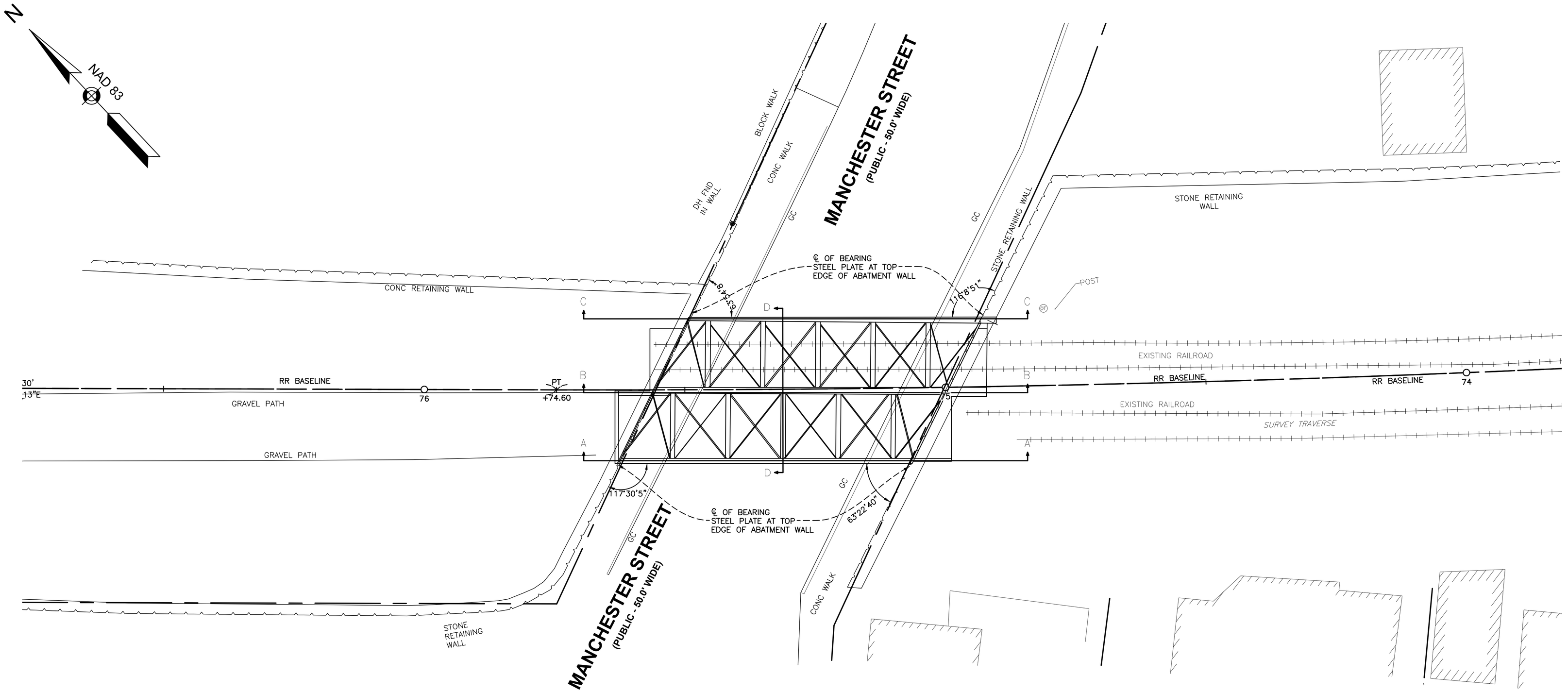

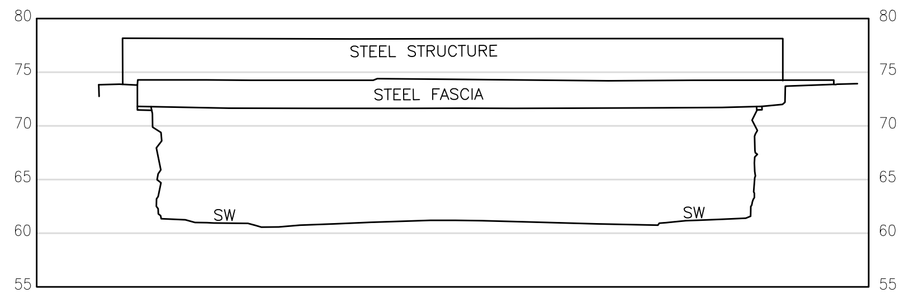

SECTION A-A

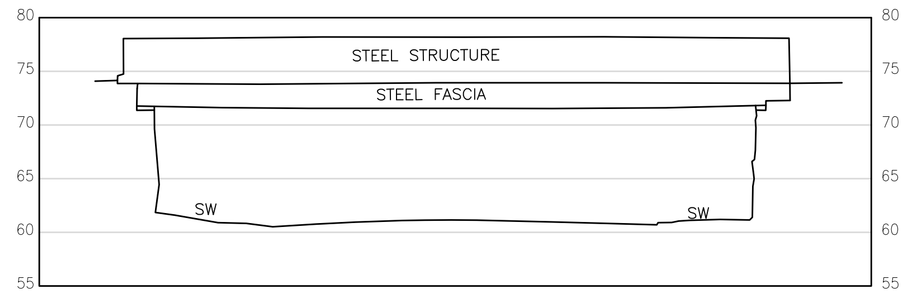

SECTION B-B

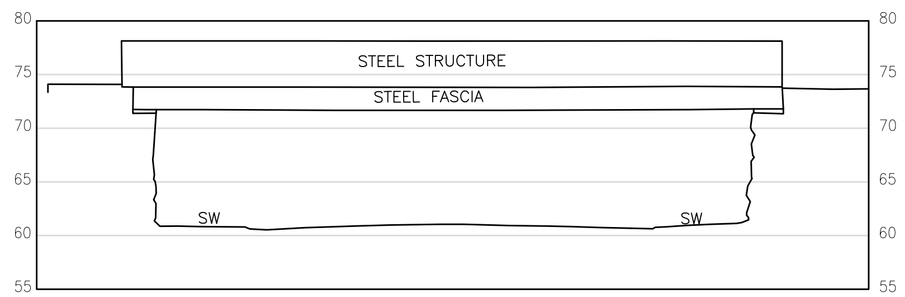

SECTION C-C

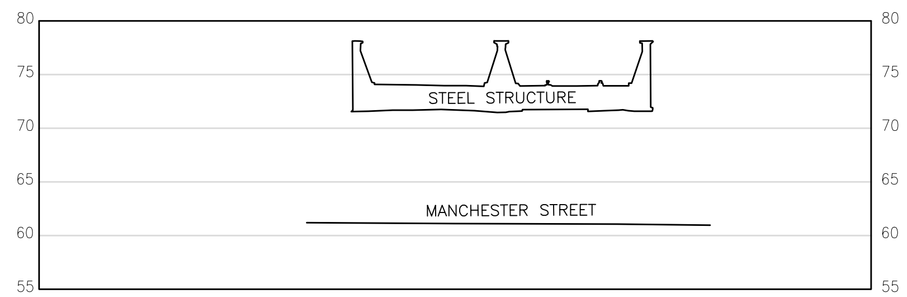

SECTION D-D

0 10 20 30 40

SCALE: 1" = 10'

GPI Greenman-Pedersen, Inc.
Engineers, Architects, Planners, Construction Engineers & Inspectors
181 Ballardvale Street, Suite 202, Wilmington, MA 01887
Tel: (978) 570-2999 Fax: (978) 658-3044
http://www.gpinet.com

COMMONWEALTH OF MASSACHUSETTS
JEFFREY P. BRADFORD
41862
PROFESSIONAL LAND SURVEYOR
4/26/2017

PREPARED FOR
Groundwork Lawrence
50 Island Street
Lawrence, MA 01840

MANCHESTER-LAWRENCE RAIL TRAIL LAWRENCE, MA

Proposal No. 608930-128034

REVISIONS		
NO.	REVISION	DATE

APRIL 28, 2017

DRAWN/DESIGN BY	CHECKED BY
FD	JPB

BRIDGE DETAILS

SCALE: 1"=10'

SHEET #

18 OF 20

A00860 - 433

16194_SV (BRIDGE DETAIL).DWG 3/30/2017

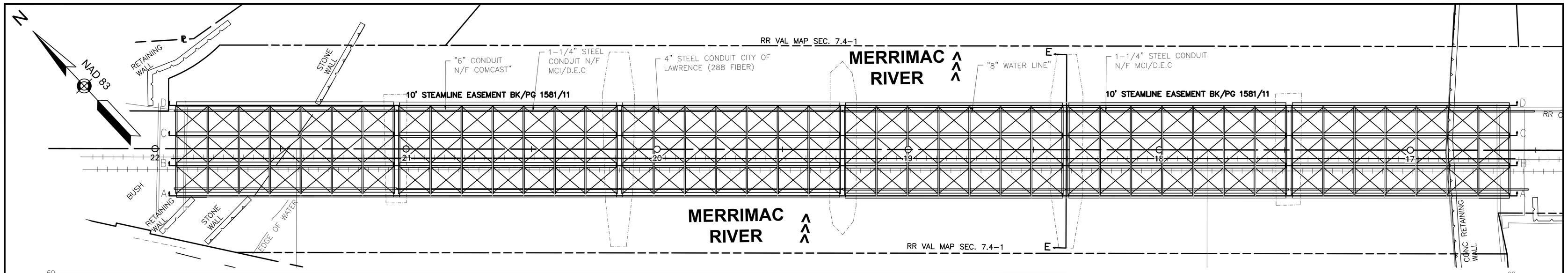

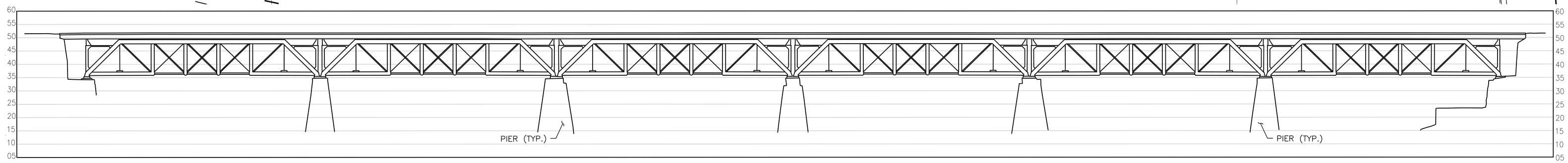

SECTION A-A

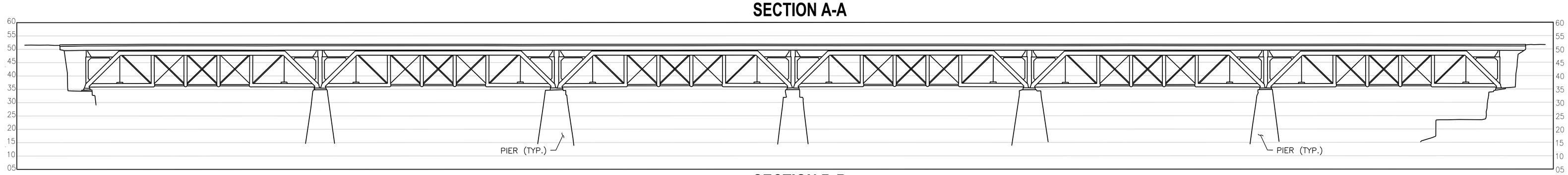

SECTION B-B

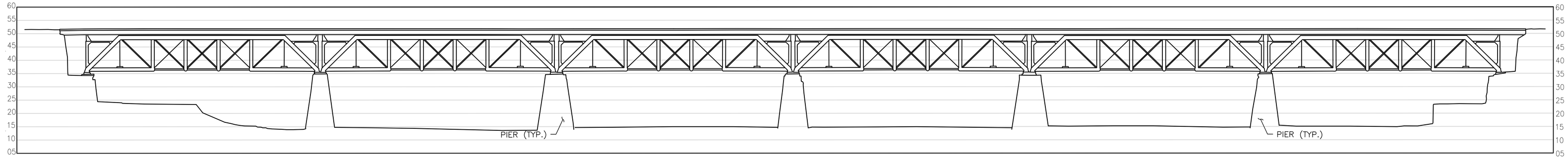

SECTION C-C

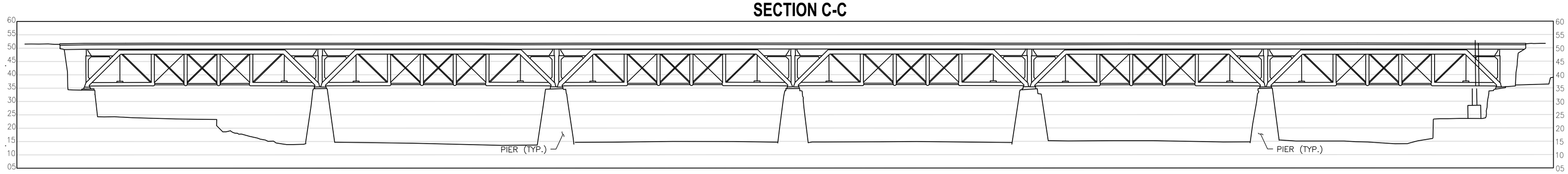

SECTION D-D

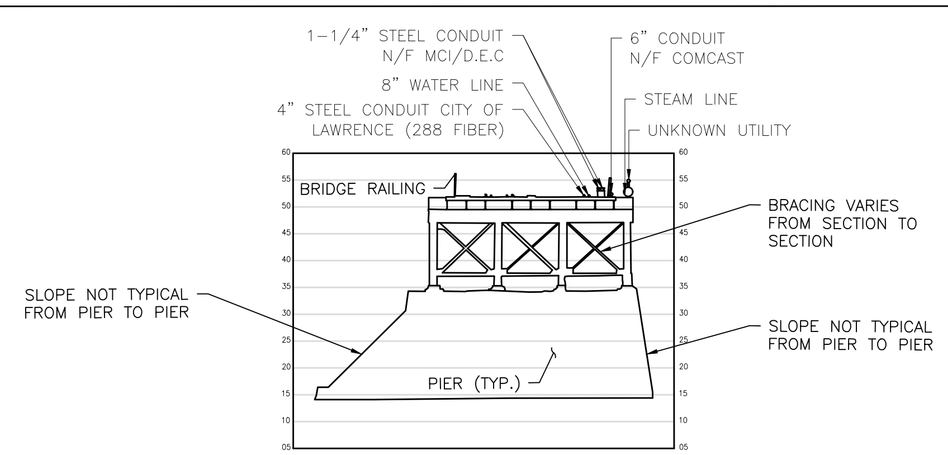

SECTION E-E

0 20 50 100

SCALE: 1" = 20'

GPI Greenman-Pedersen, Inc.
Engineers, Architects, Planners, Construction Engineers & Inspectors
181 Ballardvale Street, Suite 202, Wilmington, MA 01887
Tel: (978) 570-2999 Fax: (978) 658-3044
http://www.gpinet.com

COMMONWEALTH OF MASSACHUSETTS
JEFFREY P. BRADFORD # 41862
REGISTERED PROFESSIONAL LAND SURVEYOR
4/26/2017

PREPARED FOR
Groundwork Lawrence
50 Island Street
Lawrence, MA 01840

MANCHESTER-LAWRENCE RAIL TRAIL LAWRENCE, MA

REVISIONS		
NO.	REVISION	DATE

APRIL 28, 2017

DRAWN/DESIGN BY	CHECKED BY
FD	JPB

BRIDGE DETAILS

SCALE: 1"=20'

SHEET #

19 OF 20

Proposal No. 608930-128034

A00860 - 434

16194_SV (BRIDGE DETAIL).DWG 3/30/2017

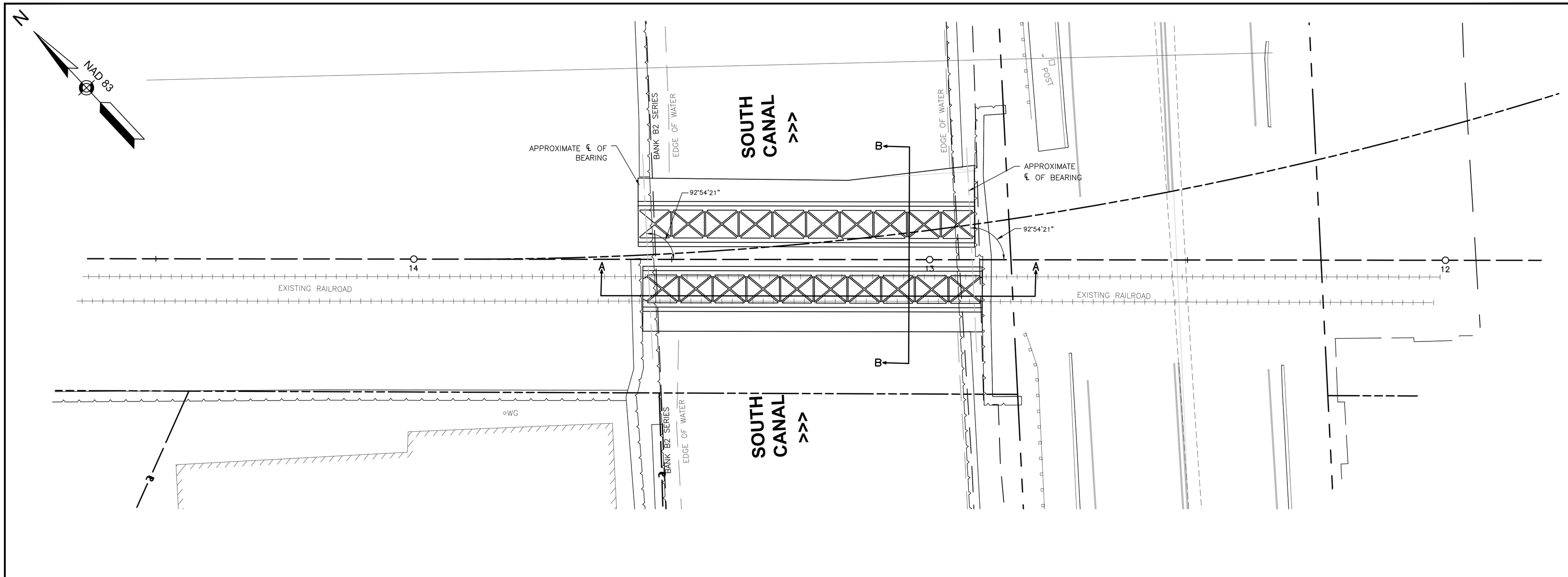

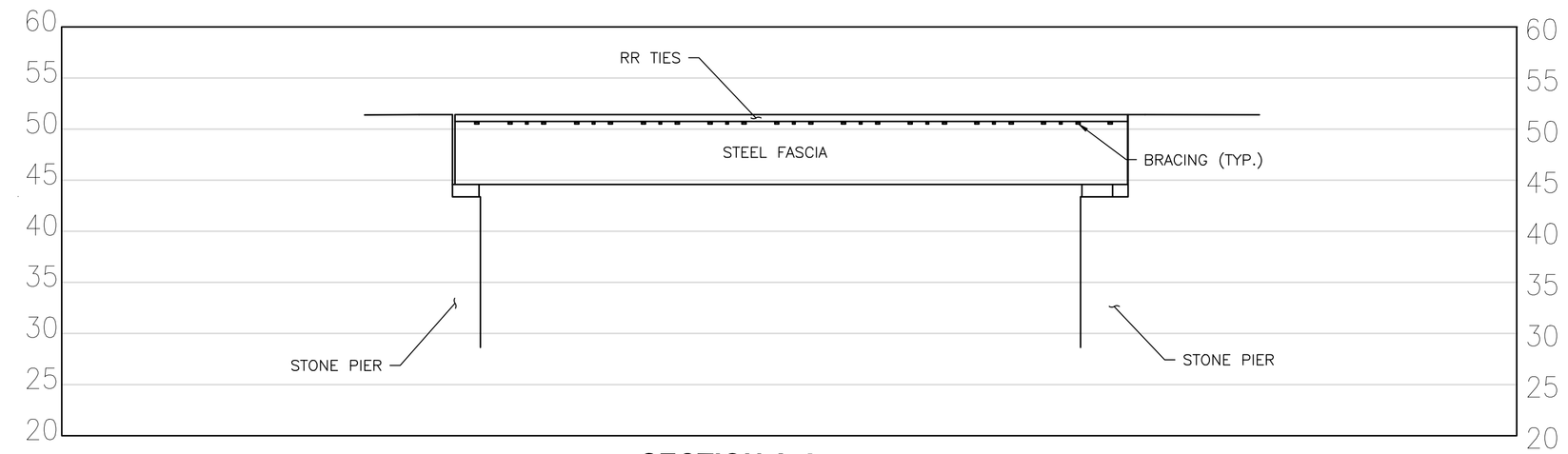

SECTION A-A

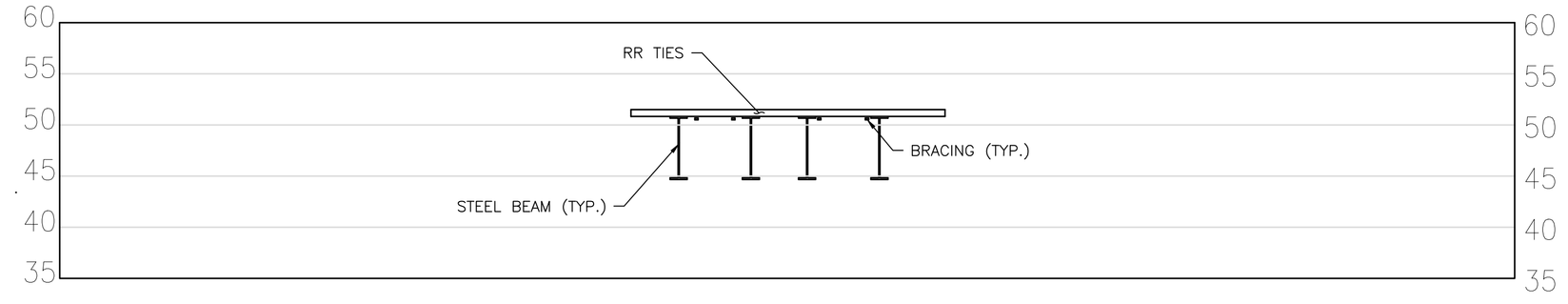

SECTION B-B

NOTE:
DUE TO LIMITED ACCESSIBILITY, ALL MEASUREMENTS FOR THE RAIL ROAD BRIDGES OVER SOUTH CANAL ARE TO BE CONSIDERED APPROXIMATE ONLY. DESIGN ENGINEER/CONTRACTOR TO VERIFY ALL MEASUREMENTS PRIOR TO CONSTRUCTION.

0 10 20 30 40
SCALE: 1" = 10'

GPI Greenman-Pedersen, Inc.
Engineers, Architects, Planners, Construction Engineers & Inspectors
181 Ballardvale Street, Suite 202, Wilmington, MA 01887
Tel: (978) 570-2999 Fax: (978) 658-3044
http://www.gpinet.com

COMMONWEALTH OF MASSACHUSETTS
JEFFREY P. BRADFORD # 41862
PROFESSIONAL LAND SURVEYOR
4/26/2017

PREPARED FOR
Groundwork Lawrence
50 Island Street
Lawrence, MA 01840

MANCHESTER-LAWRENCE RAIL TRAIL LAWRENCE, MA

REVISIONS		
NO.	REVISION	DATE

APRIL 28, 2017

DRAWN/DESIGN BY	CHECKED BY
FD	JPB

BRIDGE DETAILS

SCALE: 1"=10'

SHEET #

20 OF 20

A00860 - 435

16194_SV (BRIDGE DETAIL).DWG 3/30/2017

Proposal No. 608930-128034

APPENDIX C – TEST PIT LOGS

TEST PIT LOG

TRC Results you can rely on	**PROJECT** Lawrence Rail Trail Lawrence, MA	TEST PIT NO.	TP-1
		SHEET	1 of 2
		FILE NO.	274047.00
		CHKD BY	GAM
		Date	7/18/2017

Engineer	Max Scott	Make	Catepillar	Ground El.	74.8
Contractor	Mill City Env.	Model	305-CR	Datum	NAVD88
Operator	Ryan	Capacity	1 cubic ft	Time Start	10:30 AM
Weather	Sunny/75 Deg	Reach	10 feet	Time Finish	10:45:00 AM

Depth Below Grade (ft)	Strata Change & Water Level	Subsurface Description	Excavation Effort	Boulder Qty/Class	Remarks
1	FILL	Dark Brown fine SAND, trace Silt and fine to coarse Gravel	E	NE	
2					
3					
4					
5		Light Brown, fine to medium SAND, trace Silt, trace fine to coarse Gravel	E	NE	
6					
7					
8					
9					
10		Test pit terminated at approximately 9 feet below the ground surface			
11					
12					
13					
14					
15					

Notes:
Test Pit backfilled with excavated soils
Unable to reach 10 feet due to sidewall collapse
Groundwater not encountered

WATER SYMBOLS
▼ Groundwater
▽ Estimated Seasonal High Groundwater

N

BOULDER	CLASS
12" - 24"	A
24" - 36"	B
>36"	C

PROPORTIONS USED	
0-10%	Trace
10-20%	Little
20-35%	Some
35-50%	And

EXCAVATION EFFORT
E = Easy
M = Moderate
D = Difficult

TEST PIT LOG

PROJECT		TEST PIT NO.	TP-1
Lawrence Rail Trail		SHEET	2 of 2
Lawrence, MA		FILE NO.	274047.00
		CHKD BY	GAM
		Date	7/18/2017

Engineer	Max Scott	Make	Catepillar	Ground El.	74.8
Contractor	Mill City Env.	Model	305-CR	Datum	NAVD88
Operator	Ryan	Capacity	1 cubic ft	Time Start	10:30 AM
Weather	Sunny/75 Deg	Reach	10 Ft	Time Finish	10:45:00 AM

Notes:

N

BOULDER	CLASS
12" - 24"	A
24" - 36"	B
>36"	C

PROPORTIONS USED	
0-10%	Trace
10-20%	Little
20-35%	Some
35-50%	And

EXCAVATION EFFORT
E = Easy
M = Moderate
D = Difficult

TEST PIT LOG

PROJECT
Lawrence Rail Trail
Lawrence, MA

TEST PIT NO. TP-2
SHEET 1 of 2
FILE NO. 274047.00
CHKD BY GAM
Date 1/1/1900

Engineer	Max Scott	Make	Catepillar	Ground El.	67.5
Contractor	Mill City Env.	Model	305-CR	Datum	NAVD88
Operator	Ryan	Capacity	1 cubic ft	Time Start	9:00 AM
Weather	Rain/75 Deg	Reach	10 Ft	Time Finish	11:00:00 AM

Depth Below Grade (ft)	Strata Change & Water Level	Subsurface Description	Excavation Effort	Boulder Qty/Class	Remarks
1	TOPSOIL	Brownish-Grey fine SAND and Silt, little fine to coarse Gravel	E	NE	
2	FILL	Dark brown to black, fine SAND, some Silt, trace fine to coarse Gravel			
3					
4					
5			E	NE	
6	Fine Sand	Light brown, fine to medium SAND, trace Silt, trace fine to coarse Gravel			
7					
8					
9					
10		Test pit terminated at approximately 9 feet below the ground surface			
11					
12					
13					
14					
15					

Notes:
Test Pit backfilled with excavated soils
Groundwater not encountered

WATER SYMBOLS
▼ Groundwater
▽ Estimated Seasonal High Groundwater

N

BOULDER	CLASS
12" - 24"	A
24" - 36"	B
>36"	C

PROPORTIONS USED	
0-10%	Trace
10-20%	Little
20-35%	Some
35-50%	And

EXCAVATION EFFORT
E = Easy
M = Moderate
D = Difficult

TEST PIT LOG

	PROJECT	TEST PIT NO.	TP-2
	Lawrence Rail Trail	SHEET	2 of 2
	Lawrence, MA	FILE NO.	274047.00
		CHKD BY	GAM
		Date	7/11/2017

Engineer	Max Scott	Make	Catepillar	Ground El.	67.5
Contractor	Mill City Env.	Model	305-CR	Datum	NAVD88
Operator	Ryan	Capacity	1 cubic ft	Time Start	9:00 AM
Weather	Sunny/75 Deg	Reach	10 Ft	Time Finish	11:00:00 AM

Notes:

N

BOULDER	CLASS
12" - 24"	A
24" - 36"	B
>36"	C

PROPORTIONS USED	
0-10%	Trace
10-20%	Little
20-35%	Some
35-50%	And

EXCAVATION EFFORT
E = Easy
M = Moderate
D = Difficult

TEST PIT LOG

TRC Results you can rely on	**PROJECT** Lawrence Rail Trail Lawrence, MA	TEST PIT NO.	TP-3
		SHEET	1 of 2
		FILE NO.	274047.00
		CHKD BY	GAM
		Date	7/11/2017

Engineer	Max Scott	Make	Catepillar	Ground El.	63
Contractor	Mill City Env.	Model	305-CR	Datum	NAVD88
Operator	Ryan	Capacity	1 cubic ft	Time Start	11:55 AM
Weather	Rain/75 Deg	Reach	10 Ft	Time Finish	13:30:00 AM

Depth Below Grade (ft)	Strata Change & Water Level	Subsurface Description	Excavation Effort	Boulder Qty/Class	Remarks
1					
2		Grey to Dark Grey, fine to medium SAND, little fine to coarse Gravel, little Slag, Brick, Cobbles, Wood, Glass & Slate	E	NE	
3					
4					
5	FILL				
6					
7		Brown, fine to medium SAND, trace fine to coarse Gravel	E	NE	
8					
9					
	▼	Dark Brown to Black, fine to coarse SAND, some Silt, trace fine to coarse Gravel, wet	E	NE	
10	Organic Silt	Black, organic silt, wet	E	NE	
11		Test pit terminated at approximately 10 feet below the ground surface			
12					
13					
14					
15					

Notes:
Test Pit backfilled with excavated soils
Groundwater encountered at 9.5' bgs

WATER SYMBOLS
▼ Groundwater
▽ Estimated Seasonal High Groundwater

N

BOULDER	CLASS
12" - 24"	A
24" - 36"	B
>36"	C

PROPORTIONS USED	
0-10%	Trace
10-20%	Little
20-35%	Some
35-50%	And

EXCAVATION EFFORT
E = Easy
M = Moderate
D = Difficult

TEST PIT LOG

PROJECT		TEST PIT NO.	TP-3
Lawrence Rail Trail		SHEET	2 of 2
Lawrence, MA		FILE NO.	274047.00
		CHKD BY	GAM
		Date	7/11/2017

Engineer	Max Scott	Make	Catepillar	Ground El.	63
Contractor	Mill City Env.	Model	305-CR	Datum	NAVD88
Operator	Ryan	Capacity	1 cubic ft	Time Start	11:55 AM
Weather	Sunny/75 Deg	Reach	10 Ft	Time Finish	13:30:00 AM

Notes:

N

BOULDER	CLASS
12" - 24"	A
24" - 36"	B
>36"	C

PROPORTIONS USED	
0-10%	Trace
10-20%	Little
20-35%	Some
35-50%	And

EXCAVATION EFFORT
E = Easy
M = Moderate
D = Difficult

TEST PIT LOG

TRC Results you can rely on	**PROJECT** Lawrence Rail Trail Lawrence, MA	TEST PIT NO.	TP-4
		SHEET	1 of 2
		FILE NO.	274047.00
		CHKD BY	GAM
		Date	7/11/2017

Engineer	Max Scott	Make	Catepillar	Ground El.	60
Contractor	Mill City Env.	Model	305-CR	Datum	NAVD88
Operator	Ryan	Capacity	1 cubic ft	Time Start	4:00 PM
Weather	Sunny/75 Deg	Reach	10 Ft	Time Finish	4:30 PM

Depth Below Grade (ft)	Strata Change & Water Level	Subsurface Description	Excavation Effort	Boulder Qty/Class	Remarks
1	Fill	Dark Grey to Black fine SAND, some Silt, some Ash	E	NE	
2					
3					
4	Sand	Brown to Light brown, fine to medium SAND	E	NE	
5					
6					
7		Grey - Brown, fine SAND, trace Silt	E	NE	
8					
9					
10					
11		Test pit terminated at approximately 10 feet below the ground surface			
12					
13					
14					
15					

Notes:
Test Pit backfilled with excavated soils
Groundwater not encountered

WATER SYMBOLS
▼ Groundwater
▽ Estimated Seasonal High Groundwater

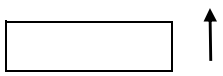

BOULDER	CLASS
12" - 24"	A
24" - 36"	B
>36"	C

PROPORTIONS USED	
0-10%	Trace
10-20%	Little
20-35%	Some
35-50%	And

EXCAVATION EFFORT
E = Easy
M = Moderate
D = Difficult

TEST PIT LOG

PROJECT		TEST PIT NO.	TP-4
Lawrence Rail Trail		SHEET	2 of 2
Lawrence, MA		FILE NO.	274047.00
		CHKD BY	GAM
		Date	7/11/2017

Engineer	Max Scott	Make	Catepillar	Ground El.	60
Contractor	Mill City Env.	Model	305-CR	Datum	NAVD88
Operator	Ryan	Capacity	1 cubic ft	Time Start	4:00 PM
Weather	Sunny/75 Deg	Reach	10 Ft	Time Finish	4:30 PM

Notes:

N

BOULDER	CLASS
12" - 24"	A
24" - 36"	B
>36"	C

PROPORTIONS USED	
0-10%	Trace
10-20%	Little
20-35%	Some
35-50%	And

EXCAVATION EFFORT

E = Easy
M = Moderate
D = Difficult

TEST PIT LOG

TRC Results you can rely on	**PROJECT** Lawrence Rail Trail Lawrence, MA	TEST PIT NO.	TP-5
		SHEET	1 of 2
		FILE NO.	274047.00
		CHKD BY	GAM
		Date	7/12/2017

Engineer	Max Scott	Make	Catepillar	Ground El.	50.5
Contractor	Mill City Env.	Model	305-CR	Datum	NAVD88
Operator	Ryan	Capacity	1 cubic ft	Time Start	855 am
Weather	Sunny/75 Deg	Reach	10 Ft	Time Finish	1055 am

Depth Below Grade (ft)	Strata Change & Water Level	Subsurface Description	Excavation Effort	Boulder Qty/Class	Remarks
1	TOPSOIL	4" Dark Brown, fine SAND, some Silt, little fc Gravel, little Organic Material, little Coal, Glass and Ash	E	NE	
2	Filll	Dark brown fine SAND, some Silt, little fine to coarse Gravel, little Coal, Glass, and Ash	E	NE	
3		Brown fine to medium SAND, little fine to coarse Gravel	E	NE	
4	▼				
5	Silty Clay	Grey, Silty CLAY	E	NE	
6					
7					
8					
9					
10		Test pit terminated at approximately 9.5 feet below the ground surface			
11					
12					
13					
14					
15					

Notes:
Test Pit backfilled with excavated soils
Groundwater encountered at 3.5' bgs

WATER SYMBOLS
▼ Groundwater
▽ Estimated Seasonal High Groundwater

N

BOULDER	CLASS
12" - 24"	A
24" - 36"	B
>36"	C

PROPORTIONS USED

0-10%	Trace
10-20%	Little
20-35%	Some
35-50%	And

EXCAVATION EFFORT
E = Easy
M = Moderate
D = Difficult

TEST PIT LOG

PROJECT		TEST PIT NO.	TP-5
Lawrence Rail Trail		SHEET	2 of 2
Lawrence, MA		FILE NO.	274047.00
		CHKD BY	GAM
		Date	7/12/2017
Engineer	Max Scott	Make	Catepillar	Ground El.	50.5
Contractor	Mill City Env.	Model	305-CR	Datum	NAVD88
Operator	Ryan	Capacity	1 cubic ft	Time Start	855 am
Weather	Sunny/75 Deg	Reach	10 Ft	Time Finish	1055 am

Notes:

N

BOULDER	CLASS
12" - 24"	A
24" - 36"	B
>36"	C

PROPORTIONS USED	
0-10%	Trace
10-20%	Little
20-35%	Some
35-50%	And

EXCAVATION EFFORT
E = Easy
M = Moderate
D = Difficult

TEST PIT LOG

TRC Results you can rely on	**PROJECT** Lawrence Rail Trail Lawrence, MA	TEST PIT NO.	TP-6
		SHEET	1 of 2
		FILE NO.	274047.00
		CHKD BY	GAM
		Date	7/12/2017

Engineer	Max Scott	Make	Catepillar	Ground El.	51.5
Contractor	Mill City Env.	Model	305-CR	Datum	NAVD88
Operator	Ryan	Capacity	1 cubic ft	Time Start	1110 am
Weather	Sunny/75 Deg	Reach	10 Ft	Time Finish	1210 pm

Depth Below Grade (ft)	Strata Change & Water Level	Subsurface Description	Excavation Effort	Boulder Qty/Class	Remarks
1	TOPSOIL	Grass and roots, Dark fine SAND some Silt, fc Gravel light Coal Glass and Ash	E	NE	
2	Fill	Dark Grey fine to medium Sand, some Silt, little Ash.	E	NE	
3	Sand	Brown fine to medium SAND	E	NE	
4					
5					
6					
7	Glacial Till	Brown fine SAND and Silt, little fine to coarse Gravel, Cobbles and Boulders	E	NE	
8					
9					
10					
11		Test pit terminated at approximately 10 feet below the ground surface			
12					
13					
14					
15					

Notes:
Test Pit backfilled with excavated soils
Groundwater not encountered

WATER SYMBOLS
▼ Groundwater
▽ Estimated Seasonal High Groundwater

N

BOULDER	CLASS
12" - 24"	A
24" - 36"	B
>36"	C

PROPORTIONS USED	
0-10%	Trace
10-20%	Little
20-35%	Some
35-50%	And

EXCAVATION EFFORT
E = Easy
M = Moderate
D = Difficult

TEST PIT LOG

PROJECT		TEST PIT NO.	TP-5
Lawrence Rail Trail		SHEET	2 of 2
Lawrence, MA		FILE NO.	274047.00
		CHKD BY	GAM
		Date	7/12/2017
Engineer	Max Scott	Make	Catepillar	Ground El.	51.5
Contractor	Mill City Env.	Model	305-CR	Datum	NAVD88
Operator	Ryan	Capacity	1 cubic ft	Time Start	1110 am
Weather	Sunny/75 Deg	Reach	10 Ft	Time Finish	1210 pm

Notes:

N

BOULDER	CLASS
12" - 24"	A
24" - 36"	B
>36"	C

PROPORTIONS USED	
0-10%	Trace
10-20%	Little
20-35%	Some
35-50%	And

EXCAVATION EFFORT
E = Easy
M = Moderate
D = Difficult

TEST PIT LOG

TRC Results you can rely on	**PROJECT** Lawrence Rail Trail Lawrence, MA	TEST PIT NO.	TP-7
		SHEET	1 of 2
		FILE NO.	274047.00
		CHKD BY	GAM
		Date	7/12/2017

Engineer	Max Scott	Make	Catepillar	Ground El.	51
Contractor	Mill City Env.	Model	305-CR	Datum	NAVD88
Operator	Ryan	Capacity	1 cubic ft	Time Start	8:50 AM
Weather	Sunny/75 Deg	Reach	10 Ft	Time Finish	9:30 AM

Depth Below Grade (ft)	Strata Change & Water Level	Subsurface Description	Excavation Effort	Boulder Qty/Class	Remarks
1	Fill	Dark Grey fine to medium SAND and fine to coarse Gravel, little Plastic, Glass, Brick, Ash.	E	NE	
2					
3	Sand	Light Brown fine SAND, trace fine to coarse Gravel	E	NE	
4					
5					
6					
7					
8					
9					
10		Test pit terminated at approximately 9 feet below the ground surface			
11					
12					
13					
14					
15					

Notes:
Test Pit backfilled with excavated soils
Groundwater not encountered

WATER SYMBOLS
▼ Groundwater
▽ Estimated Seasonal High Groundwater

N

BOULDER	CLASS
12" - 24"	A
24" - 36"	B
>36"	C

PROPORTIONS USED	
0-10%	Trace
10-20%	Little
20-35%	Some
35-50%	And

EXCAVATION EFFORT
E = Easy
M = Moderate
D = Difficult

TEST PIT LOG

PROJECT		TEST PIT NO.	TP-7
Lawrence Rail Trail		SHEET	2 of 2
Lawrence, MA		FILE NO.	274047.00
		CHKD BY	GAM
		Date	7/12/2017
Engineer	Max Scott	Make	Catepillar
Contractor	Mill City Env.	Model	305-CR
Operator	Ryan	Capacity	1 cubic ft
Weather	Sunny/75 Deg	Reach	10 Ft
		Ground El.	51
		Datum	NAVD88
		Time Start	8:50 AM
		Time Finish	9:30 AM

Notes:

N

BOULDER	CLASS
12" - 24"	A
24" - 36"	B
>36"	C

PROPORTIONS USED	
0-10%	Trace
10-20%	Little
20-35%	Some
35-50%	And

EXCAVATION EFFORT
E = Easy
M = Moderate
D = Difficult

TEST PIT LOG

TRC Results you can rely on	**PROJECT** Lawrence Rail Trail Lawrence, MA	TEST PIT NO.	TP-8
		SHEET	1 of 2
		FILE NO.	274047.00
		CHKD BY	GAM
		Date	7/13/2017

Engineer	Max Scott	Make	Catepillar	Ground El.	51.5
Contractor	Mill City Env.	Model	305-CR	Datum	NAVD88
Operator	Ryan	Capacity	1 cubic ft	Time Start	1215 pm
Weather	Sunny/75 Deg	Reach	10 Ft	Time Finish	1330 pm

Depth Below Grade (ft)	Strata Change & Water Level	Subsurface Description	Excavation Effort	Boulder Qty/Class	Remarks
1	Fill	Dark Brown to Black, fine to medium SAND, some silt and fine to coarse Gravel	E	NE	
2					
3	Sand	Brown fine to coarse SAND, little fine to coarse Gravel	E	NE	
4					
5	Fine Sand	Tan fine SAND, trace silt	E	NE	
6					
7					
8					
9					
10					
11		Test pit terminated at approximately 10 feet below the ground surface			
12					
13					
14					
15					

Notes:
Test Pit backfilled with excavated soils
Groundwater not encountered

WATER SYMBOLS
▼ Groundwater
▽ Estimated Seasonal High Groundwater

N

BOULDER	CLASS
12" - 24"	A
24" - 36"	B
>36"	C

PROPORTIONS USED	
0-10%	Trace
10-20%	Little
20-35%	Some
35-50%	And

EXCAVATION EFFORT
E = Easy
M = Moderate
D = Difficult

TEST PIT LOG

PROJECT		TEST PIT NO.	TP-8
Lawrence Rail Trail		SHEET	2 of 2
Lawrence, MA		FILE NO.	274047.00
		CHKD BY	GAM
		Date	7/13/2017
Engineer	Max Scott	Make	Catepillar	Ground El.	51.5
Contractor	Mill City Env.	Model	305-CR	Datum	NAVD88
Operator	Ryan	Capacity	1 cubic ft	Time Start	1215 pm
Weather	Sunny/75 Deg	Reach	10 Ft	Time Finish	1330 pm

Notes:

N

BOULDER	CLASS
12" - 24"	A
24" - 36"	B
>36"	C

PROPORTIONS USED	
0-10%	Trace
10-20%	Little
20-35%	Some
35-50%	And

EXCAVATION EFFORT
E = Easy
M = Moderate
D = Difficult

APPENDIX D - CALCULATIONS

Permeability Calculations:

Objective: Calculate permeability and infiltration rate for Test Pit TP-1.
Approach: Use the Variable Head & Basic Time-Lag methods to calculate the permeability in inches/hour.
References: 1. Exploration Location Plan provided by TEC.
2. Time Lag and Soil Permeability, Hsorlev (1951).
Groundwater: 1. Seasonal High Groundwater Not Encountered.
2. Groundwater not encountered to 9 feet bgs.
Solution:

Test Location	TP-1
Test Number	1
Test Depth	4.5'
Elevation (NAVD88)	70
Date	7/18/2017

Initial depth =	**12**	inches below sight tube
Diameter of pipe =	**4**	inches

USDA: Sand
Burmister: Light Brown, fine to medium SAND, trace Silt, trace fine to coarse Gravel

Time		Height			Results			Inputs				
Seconds	Minutes	Inches	Feet	Feet + Initial Depth	Time (Minutes)	Relative Piezometric Head (Feet)	Percent of Initial Head	Time	Sight Tube Reading, inches	Sight Tube Reading, 8ths	Sight Tube Depth, inches	Total Head, inches
15	0.25	30.38	2.53	3.53	0.25	3.53	100.00	15	30	3	30.38	42.38
30	0.50	30.00	2.50	3.50	0.50	3.50	99.12	30	30	0	30.00	42.00
45	0.75	29.75	2.48	3.48	0.75	3.48	98.53	45	29	6	29.75	41.75
60	1.00	29.50	2.46	3.46	1.00	3.46	97.94	60	29	4	29.50	41.50
75	1.25	29.25	2.44	3.44	1.25	3.44	97.35	75	29	2	29.25	41.25
90	1.50	29.00	2.42	3.42	1.50	3.42	96.76	90	29	0	29.00	41.00
105	1.75	28.75	2.40	3.40	1.75	3.40	96.17	105	28	6	28.75	40.75
120	2.00	28.50	2.38	3.38	2.00	3.38	95.58	120	28	4	28.50	40.50
135	2.25	28.25	2.35	3.35	2.25	3.35	94.99	135	28	2	28.25	40.25
150	2.50	28.00	2.33	3.33	2.50	3.33	94.40	150	28	0	28.00	40.00
165	2.75	27.75	2.31	3.31	2.75	3.31	93.81	165	27	6	27.75	39.75
180	3.00	27.50	2.29	3.29	3.00	3.29	93.22	180	27	4	27.50	39.50
210	3.50	27.13	2.26	3.26	3.50	3.26	92.33	210	27	1	27.13	39.13
240	4.00	26.63	2.22	3.22	4.00	3.22	91.15	240	26	5	26.63	38.63
270	4.50	26.13	2.18	3.18	4.50	3.18	89.97	270	26	1	26.13	38.13
300	5.00	25.75	2.15	3.15	5.00	3.15	89.09	300	25	6	25.75	37.75
330	5.50	25.25	2.10	3.10	5.50	3.10	87.91	330	25	2	25.25	37.25
360	6.00	24.75	2.06	3.06	6.00	3.06	86.73	360	24	6	24.75	36.75
390	6.50	24.38	2.03	3.03	6.50	3.03	85.84	390	24	3	24.38	36.38
420	7.00	24.00	2.00	3.00	7.00	3.00	84.96	420	24	0	24.00	36.00
450	7.50	23.63	1.97	2.97	7.50	2.97	84.07	450	23	5	23.63	35.63
480	8.00	23.25	1.94	2.94	8.00	2.94	83.19	480	23	2	23.25	35.25
510	8.50	22.88	1.91	2.91	8.50	2.91	82.30	510	22	7	22.88	34.88
540	9.00	22.50	1.88	2.88	9.00	2.88	81.42	540	22	4	22.50	34.50
570	9.50	22.00	1.83	2.83	9.50	2.83	80.24	570	22	0	22.00	34.00
600	10.00	21.63	1.80	2.80	10.00	2.80	79.35	600	21	5	21.63	33.63
630	10.50	21.13	1.76	2.76	10.50	2.76	78.17	630	21	1	21.13	33.13
660	11.00	20.63	1.72	2.72	11.00	2.72	76.99	660	20	5	20.63	32.63
690	11.50	20.00	1.67	2.67	11.50	2.67	75.52	690	20	0	20.00	32.00
720	12.00	19.50	1.63	2.63	12.00	2.63	74.34	720	19	4	19.50	31.50
750	12.50	19.00	1.58	2.58	12.50	2.58	73.16	750	19	0	19.00	31.00
780	13.00	18.50	1.54	2.54	13.00	2.54	71.98	780	18	4	18.50	30.50
810	13.50	18.00	1.50	2.50	13.50	2.50	70.80	810	18	0	18.00	30.00
840	14.00	17.63	1.47	2.47	14.00	2.47	69.91	840	17	5	17.63	29.63
870	14.50	17.13	1.43	2.43	14.50	2.43	68.73	870	17	1	17.13	29.13
900	15.00	16.63	1.39	2.39	15.00	2.39	67.55	900	16	5	16.63	28.63
930	15.50	16.13	1.34	2.34	15.50	2.34	66.37	930	16	1	16.13	28.13
960	16.00	15.50	1.29	2.29	16.00	2.29	64.90	960	15	4	15.50	27.50
990	16.50	15.00	1.25	2.25	16.50	2.25	63.72	990	15	0	15.00	27.00
1020	17.00	14.50	1.21	2.21	17.00	2.21	62.54	1020	14	4	14.50	26.50
1050	17.50	14.00	1.17	2.17	17.50	2.17	61.36	1050	14	0	14.00	26.00
1080	18.00	13.63	1.14	2.14	18.00	2.14	60.47	1080	13	5	13.63	25.63
1110	18.50	13.13	1.09	2.09	18.50	2.09	59.29	1110	13	1	13.13	25.13
1140	19.00	12.63	1.05	2.05	19.00	2.05	58.11	1140	12	5	12.63	24.63
1170	19.50	12.13	1.01	2.01	19.50	2.01	56.93	1170	12	1	12.13	24.13
1200	20.00	11.63	0.97	1.97	20.00	1.97	55.75	1200	11	5	11.63	23.63
1230	20.50	11.13	0.93	1.93	20.50	1.93	54.57	1230	11	1	11.13	23.13
1260	21.00	10.63	0.89	1.89	21.00	1.89	53.39	1260	10	5	10.63	22.63
1290	21.50	10.13	0.84	1.84	21.50	1.84	52.21	1290	10	1	10.13	22.13
1320	22.00	9.63	0.80	1.80	22.00	1.80	51.03	1320	9	5	9.63	21.63
1350	22.50	9.13	0.76	1.76	22.50	1.76	49.85	1350	9	1	9.13	21.13
1380	23.00	8.63	0.72	1.72	23.00	1.72	48.67	1380	8	5	8.63	20.63
1410	23.50	8.13	0.68	1.68	23.50	1.68	47.49	1410	8	1	8.13	20.13
1440	24.00	7.63	0.64	1.64	24.00	1.64	46.31	1440	7	5	7.63	19.63
1470	24.50	7.13	0.59	1.59	24.50	1.59	45.13	1470	7	1	7.13	19.13
1500	25.00	6.63	0.55	1.55	25.00	1.55	43.95	1500	6	5	6.63	18.63
1530	25.50	6.13	0.51	1.51	25.50	1.51	42.77	1530	6	1	6.13	18.13
1560	26.00	5.63	0.47	1.47	26.00	1.47	41.59	1560	5	5	5.63	17.63
1590	26.50	5.13	0.43	1.43	26.50	1.43	40.41	1590	5	1	5.13	17.13
1620	27.00	4.63	0.39	1.39	27.00	1.39	39.23	1620	4	5	4.63	16.63
1650	27.50	4.13	0.34	1.34	27.50	1.34	38.05	1650	4	1	4.13	16.13
1680	28.00	3.50	0.29	1.29	28.00	1.29	36.58	1680	3	4	3.50	15.50

Permeability Calculations:

Variable Head Method:

	inch/min	inch/hour	feet/day	cm/sec
K_m=	4.10E-02	2.46	4.92	1.74E-03

Variable Head permeability, Flush Bottom in Uniform Soil (Hvorslev Case C)
K_m = mean coefficient of permeability
K_m = [(pi*D)/(11*(t2-t1))]*ln((H1)/(H2))

D (diameter of pipe) = 4 inches
K_m = **2.46** **inch/hour** (approximation using Variable Head Method)

Basic Time-Lag Method:

			inch/min	inch/hour	feet/day	cm/sec
T=	28.00	K_m=	4.08E-02	2.45	4.90	1.73E-03

Basic Time Lag Method - Flush Bottom in Uniform Soil (Hvorslev Case C)
Km = mean coefficient of permeability
Km = (pi*D)/(11*T)

T= ln(*%FallingHead / y-intercept*)/*exponentslope*

D = diameter of pipe = 4.625 inches
K_m = **2.45** **inch/hour** (approximation using Basic Time Lag Method)

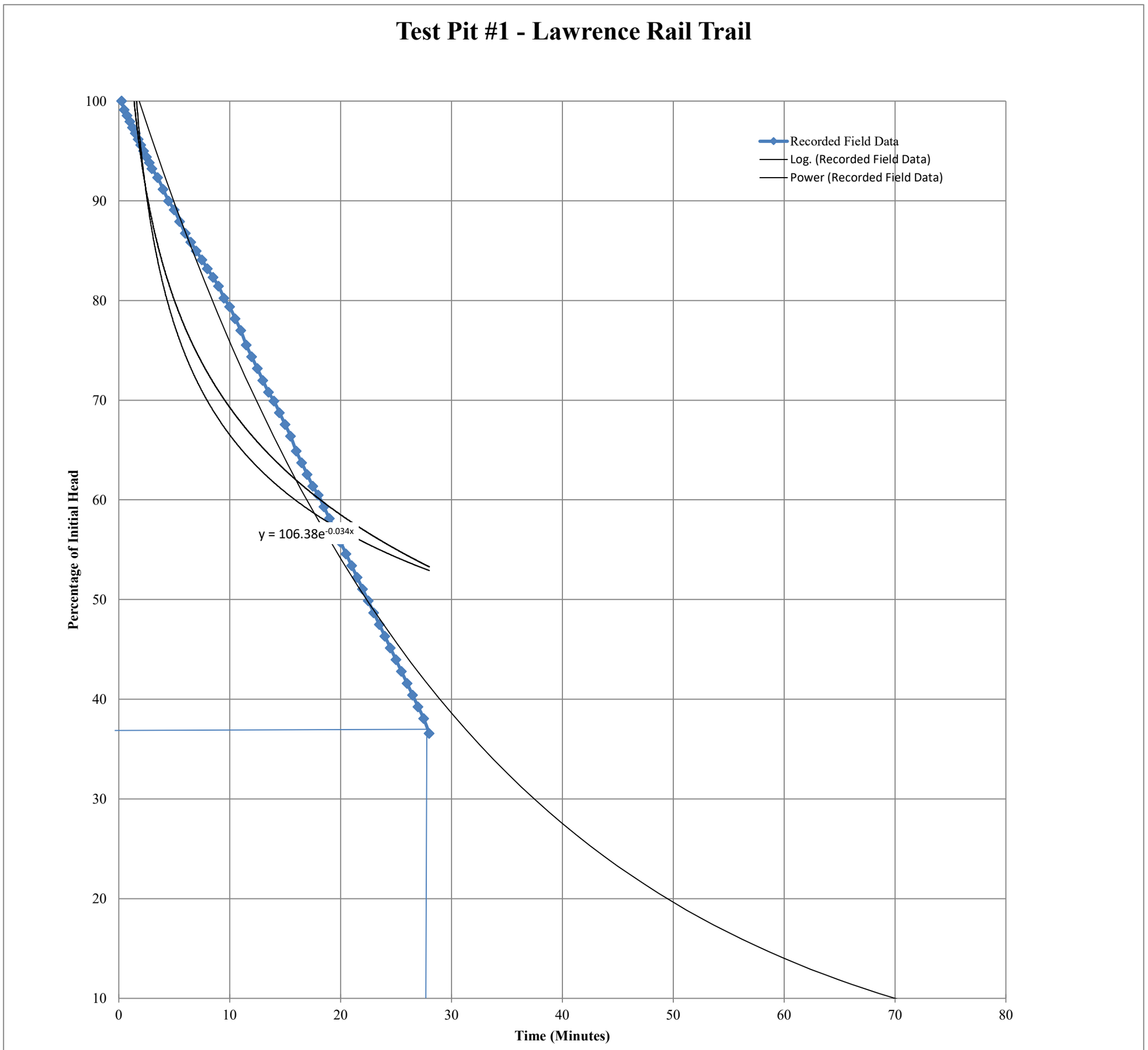

Permeability Calculations:

Objective: Calculate permeability and infiltration rate for Test Pit TP-2.

Approach: Use the Variable Head & Basic Time-Lag methods to calculate the permeability in inches/hour.

References: 1. Exploration Location Plan provided by TEC.
2. Time Lag and Soil Permeability, Hsorlev (1951).

Groundwater: 1. Seasonal High Groundwater Not Encountered.
2. Groundwater not encountered to 9 feet bgs.

Solution:

Test Location	TP-2
Test Number	1
Test Depth	4.5'
Elevation (NAVD88)	63
Date	7/11/2017

Initial depth =	**12**	inches below sight tube
Diameter of pipe =	**4**	inches

USDA: Sand
Burmister: Light brown, fine to medium SAND, trace Silt, trace fine to coarse Gravel. Layer of orange - found at test depth.

Time		Height			Results			Inputs				
Seconds	Minutes	Inches	Feet	Feet + Initial Depth	Time (Minutes)	Relative Piezometric Head (Feet)	Percent of Initial Head	Time	Sight Tube Reading, inches	Sight Tube Reading, 8ths	Sight Tube Depth, inches	Total Head, inches
15	0.25	28.13	2.34	3.34	0.25	3.34	100.00	15	28	1	28.13	40.13
30	0.50	24.75	2.06	3.06	0.50	3.06	91.59	30	24	6	24.75	36.75
45	0.75	22.38	1.86	2.86	0.75	2.86	85.67	45	22	3	22.38	34.38
60	1.00	20.25	1.69	2.69	1.00	2.69	80.37	60	20	2	20.25	32.25
75	1.25	18.13	1.51	2.51	1.25	2.51	75.08	75	18	1	18.13	30.13
90	1.50	16.25	1.35	2.35	1.50	2.35	70.40	90	16	2	16.25	28.25
105	1.75	14.50	1.21	2.21	1.75	2.21	66.04	105	14	4	14.50	26.50
120	2.00	13.00	1.08	2.08	2.00	2.08	62.31	120	13	0	13.00	25.00
135	2.25	11.50	0.96	1.96	2.25	1.96	58.57	135	11	4	11.50	23.50
150	2.50	10.25	0.85	1.85	2.50	1.85	55.45	150	10	2	10.25	22.25
165	2.75	9.00	0.75	1.75	2.75	1.75	52.34	165	9	0	9.00	21.00
180	3.00	7.88	0.66	1.66	3.00	1.66	49.53	180	7	7	7.88	19.88
195	3.25	6.75	0.56	1.56	3.25	1.56	46.73	195	6	6	6.75	18.75
210	3.50	5.88	0.49	1.49	3.50	1.49	44.55	210	5	7	5.88	17.88
225	3.75	4.75	0.40	1.40	3.75	1.40	41.74	225	4	6	4.75	16.75
240	4.00	3.88	0.32	1.32	4.00	1.32	39.56	240	3	7	3.88	15.88
255	4.25	3.00	0.25	1.25	4.25	1.25	37.38	255	3	0	3.00	15.00
270	4.50	2.38	0.20	1.20	4.50	1.20	35.83	270	2	3	2.38	14.38
285	4.75	1.50	0.13	1.13	4.92	1.13	33.64	295	1	4	1.50	13.50

Permeability Calculations:

Variable Head Method:

	inch/min	inch/hour	feet/day	cm/sec
K_m=	2.62E-01	15.72	31.44	1.11E-02

Variable Head permeability, Flush Bottom in Uniform Soil (Hvorslev Case C)
K_m = mean coefficient of permeability
K_m = [(pi*D)/(11*(t2-t1))]*ln((H1)/(H2))

D (diameter of pipe) = 4 inches
K_m = **15.72 inch/hour** (approximation using Variable Head Method)

Basic Time-Lag Method:

			inch/min	inch/hour	feet/day	cm/sec
T=	4.30	K_m=	2.66E-01	15.94	31.88	1.12E-02

Basic Time Lag Method - Flush Bottom in Uniform Soil (Hvorslev Case C)
Km = mean coefficient of permeability
Km = (pi*D)/(11*T)

T= ln(*%FallingHead / y-intercept*)/*exponentslope*

D (diameter of pipe) = 4 inches
K_m = **15.94 inch/hour** (approximation using Basic Time Lag Method)

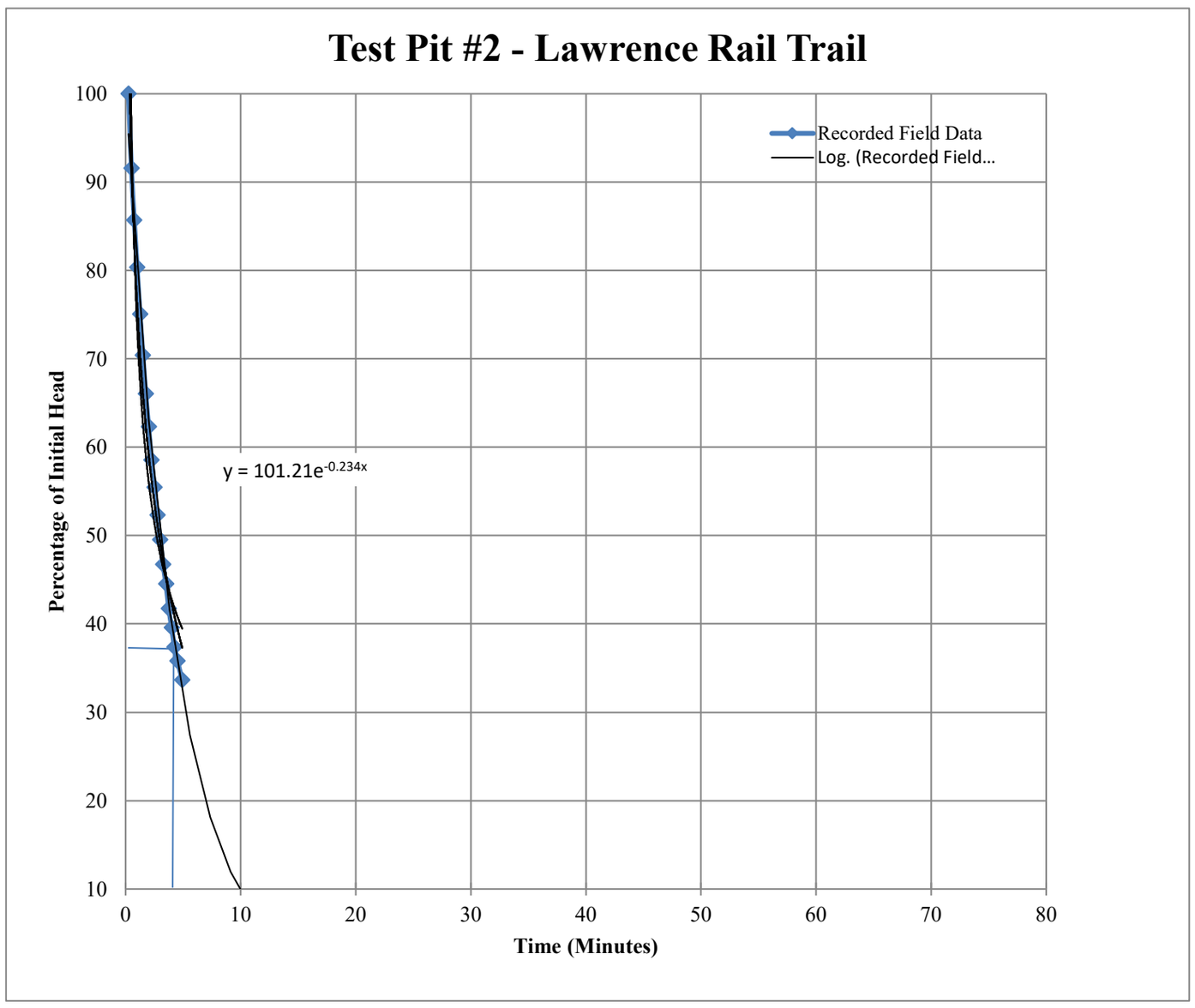

Permeability Calculations:

Objective: Calculate

Approach: Use the Variable Head & Basic Time-Lag methods to calculate the permeability in inches/hour.

References: 1. Exploration Location Plan provided by TEC.
2. Time Lag and Soil Permeability, Hsorlev (1951).

Groundwater: 1. Seasonal High Groundwater Not Encountered.
2. Groundwater encountered at 9.5 feet.

Solution:

Test Location	TP-3
Test Number	1
Test Depth	3.5
Elevation (NAVD88)	58.5
Date	7/11/2017

Initial depth =	**12**	inches below sight tube
Diameter of pipe =	**4**	inches

USDA: Sand
Burmister: Brown, fine to meidum SAND, trace fine to coarse Gravel

Time		Height			Results			Inputs				
Seconds	Minutes	Inches	Feet	Feet + Initial Depth	Time (Minutes)	Relative Piezometric Head (Feet)	Percent of Initial Head	Time	Sight Tube Reading, inches	Sight Tube Reading, 8ths	Sight Tube Depth, inches	Total Head, inches
15	0.25	32.13	2.68	3.68	0.25	3.68	100.00	15	32	1	32.13	44.13
30	0.50	31.50	2.63	3.63	0.50	3.63	98.58	30	31	4	31.50	43.50
45	0.75	31.00	2.58	3.58	0.75	3.58	97.45	45	31	0	31.00	43.00
60	1.00	30.38	2.53	3.53	1.00	3.53	96.03	60	30	3	30.38	42.38
75	1.25	29.88	2.49	3.49	1.25	3.49	94.90	75	29	7	29.88	41.88
90	1.50	29.38	2.45	3.45	1.50	3.45	93.77	90	29	3	29.38	41.38
105	1.75	28.50	2.38	3.38	1.75	3.38	91.78	105	28	4	28.50	40.50
120	2.00	27.75	2.31	3.31	2.00	3.31	90.08	120	27	6	27.75	39.75
135	2.25	27.13	2.26	3.26	2.25	3.26	88.67	135	27	1	27.13	39.13
150	2.50	26.50	2.21	3.21	2.50	3.21	87.25	150	26	4	26.50	38.50
165	2.75	25.75	2.15	3.15	2.75	3.15	85.55	165	25	6	25.75	37.75
180	3.00	25.00	2.08	3.08	3.00	3.08	83.85	180	25	0	25.00	37.00
195	3.25	24.38	2.03	3.03	3.25	3.03	82.44	195	24	3	24.38	36.38
210	3.50	23.50	1.96	2.96	3.50	2.96	80.45	210	23	4	23.50	35.50
225	3.75	22.63	1.89	2.89	3.75	2.89	78.47	225	22	5	22.63	34.63
240	4.00	22.00	1.83	2.83	4.00	2.83	77.05	240	22	0	22.00	34.00
255	4.25	21.25	1.77	2.77	4.25	2.77	75.35	255	21	2	21.25	33.25
270	4.50	20.50	1.71	2.71	4.50	2.71	73.65	270	20	4	20.50	32.50
300	5.00	19.25	1.60	2.60	5.00	2.60	70.82	300	19	2	19.25	31.25
330	5.50	17.63	1.47	2.47	5.50	2.47	67.14	330	17	5	17.63	29.63
360	6.00	16.38	1.36	2.36	6.00	2.36	64.31	360	16	3	16.38	28.38
390	6.50	14.63	1.22	2.22	6.50	2.22	60.34	390	14	5	14.63	26.63
420	7.00	13.38	1.11	2.11	7.00	2.11	57.51	420	13	3	13.38	25.38
450	7.50	12.00	1.00	2.00	7.50	2.00	54.39	450	12	0	12.00	24.00
480	8.00	10.63	0.89	1.89	8.00	1.89	51.27	480	10	5	10.63	22.63
510	8.50	9.50	0.79	1.79	8.50	1.79	48.73	510	9	4	9.50	21.50
540	9.00	8.38	0.70	1.70	9.00	1.70	46.18	540	8	3	8.38	20.38
570	9.50	7.50	0.63	1.63	9.50	1.63	44.19	570	7	4	7.50	19.50
600	10.00	6.50	0.54	1.54	10.00	1.54	41.93	600	6	4	6.50	18.50
630	10.50	5.50	0.46	1.46	10.50	1.46	39.66	630	5	4	5.50	17.50
660	11.00	4.13	0.34	1.34	11.00	1.34	36.54	660	4	1	4.13	16.13
690	11.50	3.38	0.28	1.28	11.50	1.28	34.84	690	3	3	3.38	15.38
720	12.00	2.50	0.21	1.21	12.00	1.21	32.86	720	2	4	2.50	14.50
750	12.50	1.50	0.13	1.13	12.50	1.13	30.59	750	1	4	1.50	13.50

Permeability Calculations:

Variable Head Method:

	inch/min	inch/hour	feet/day	cm/sec
K_m=	1.08E-01	6.49	12.99	4.58E-03

Variable Head permeability, Flush Bottom in Uniform Soil (Hvorslev Case C)
K_m = mean coefficient of permeability
K_m = [(pi*D)/(11*(t2-t1))]*ln((H1)/(H2))

D (diameter of pipe) = 4 inches
K_m = **6.49** **inch/hour** (approximation using Variable Head Method)

Basic Time-Lag Method:

			inch/min	inch/hour	feet/day	cm/sec
T=	11.00	K_m=	1.04E-01	6.23	12.46	4.40E-03

Basic Time Lag Method - Flush Bottom in Uniform Soil (Hvorslev Case C)
Km = mean coefficient of permeability

Km = (pi*D)/(11*T)

T= ln(*%FallingHead / y-intercept*)/*exponentslope*

D (diameter of pipe) = 28.5 inches
K_m = **6.23** **inch/hour** (approximation using Basic Time Lag Method)

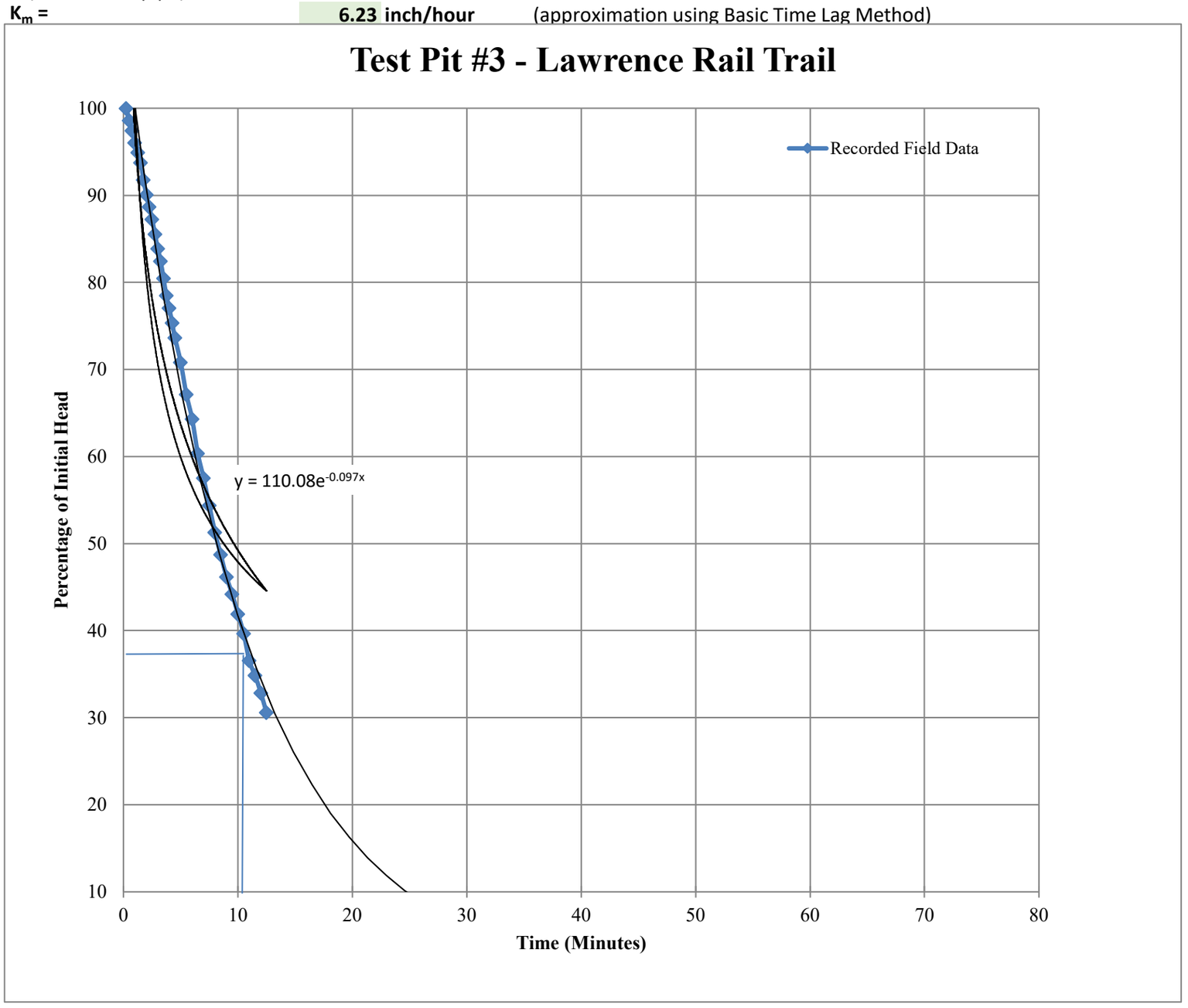

Permeability Calculations:

Objective: Calculate

Approach: Use the Variable Head & Basic Time-Lag methods to calculate the permeability in inches/hour.

References: 1. Exploration Location Plan provided by TEC.
2. Time Lag and Soil Permeability, Hsorlev (1951).

Groundwater: 1. Seasonal High Groundwater Not Encountered.
2. Groundwater not encountered to 10 feet bgs.

Solution:

Test Location	TP-4
Test Number	1
Test Depth	3.5'
Elevation (NAVD88)	55.5
Date	7/11/2017

Initial depth =	**12**	inches below sight tube
Diameter of pipe =	**4**	inches

USDA: Sand

Burmister: Brown to Light brown, fine to medium SAND

Time		Height			Results			INPUTS				
Seconds	Minutes	Inches	Feet	Feet + Initial Depth	Time (Minutes)	Relative Piezometric Head (Feet)	Percent of Initial Head	Time	Sight Tube Reading, inches	Sight Tube Reading, 8ths	Sight Tube Depth, inches	Total Head, inches
15	0.25	32.63	2.72	3.72	0.25	3.72	100.00	15	32	5	32.63	44.63
30	0.50	32.25	2.69	3.69	0.50	3.69	99.16	30	32	2	32.25	44.25
45	0.75	31.88	2.66	3.66	0.75	3.66	98.32	45	31	7	31.88	43.88
60	1.00	31.50	2.63	3.63	1.00	3.63	97.48	60	31	4	31.50	43.50
75	1.25	31.13	2.59	3.59	1.25	3.59	96.64	75	31	1	31.13	43.13
90	1.50	30.75	2.56	3.56	1.50	3.56	95.80	90	30	6	30.75	42.75
105	1.75	30.50	2.54	3.54	1.75	3.54	95.24	105	30	4	30.50	42.50
120	2.00	30.13	2.51	3.51	2.00	3.51	94.40	120	30	1	30.13	42.13
150	2.50	29.63	2.47	3.47	2.50	3.47	93.28	150	29	5	29.63	41.63
180	3.00	29.00	2.42	3.42	3.00	3.42	91.88	180	29	0	29.00	41.00
210	3.50	28.38	2.36	3.36	3.50	3.36	90.48	210	28	3	28.38	40.38
240	4.00	27.88	2.32	3.32	4.00	3.32	89.36	240	27	7	27.88	39.88
270	4.50	27.25	2.27	3.27	4.50	3.27	87.96	270	27	2	27.25	39.25
300	5.00	26.88	2.24	3.24	5.00	3.24	87.11	300	26	7	26.88	38.88
330	5.50	26.25	2.19	3.19	5.50	3.19	85.71	330	26	2	26.25	38.25
360	6.00	25.88	2.16	3.16	6.00	3.16	84.87	360	25	7	25.88	37.88
390	6.50	25.38	2.11	3.11	6.50	3.11	83.75	390	25	3	25.38	37.38
420	7.00	24.88	2.07	3.07	7.00	3.07	82.63	420	24	7	24.88	36.88
450	7.50	24.38	2.03	3.03	7.50	3.03	81.51	450	24	3	24.38	36.38
480	8.00	23.88	1.99	2.99	8.00	2.99	80.39	480	23	7	23.88	35.88
510	8.50	23.38	1.95	2.95	8.50	2.95	79.27	510	23	3	23.38	35.38
540	9.00	23.00	1.92	2.92	9.00	2.92	78.43	540	23	0	23.00	35.00
570	9.50	22.75	1.90	2.90	9.50	2.90	77.87	570	22	6	22.75	34.75
600	10.00	22.25	1.85	2.85	10.00	2.85	76.75	600	22	2	22.25	34.25
630	10.50	21.75	1.81	2.81	10.50	2.81	75.63	630	21	6	21.75	33.75
660	11.00	21.25	1.77	2.77	11.00	2.77	74.51	660	21	2	21.25	33.25
690	11.50	20.75	1.73	2.73	11.50	2.73	73.39	690	20	6	20.75	32.75
720	12.00	20.25	1.69	2.69	12.00	2.69	72.27	720	20	2	20.25	32.25
750	12.50	19.75	1.65	2.65	12.50	2.65	71.15	750	19	6	19.75	31.75
780	13.00	19.25	1.60	2.60	13.00	2.60	70.03	780	19	2	19.25	31.25
810	13.50	18.75	1.56	2.56	13.50	2.56	68.91	810	18	6	18.75	30.75
840	14.00	18.25	1.52	2.52	14.00	2.52	67.79	840	18	2	18.25	30.25
870	14.50	18.00	1.50	2.50	14.50	2.50	67.23	870	18	0	18.00	30.00
900	15.00	17.75	1.48	2.48	15.00	2.48	66.67	900	17	6	17.75	29.75
930	15.50	17.50	1.46	2.46	15.50	2.46	66.11	930	17	4	17.50	29.50
960	16.00	17.13	1.43	2.43	16.00	2.43	65.27	960	17	1	17.13	29.13
990	16.50	17.00	1.42	2.42	16.50	2.42	64.99	990	17	0	17.00	29.00
1020	17.00	16.88	1.41	2.41	17.00	2.41	64.71	1020	16	7	16.88	28.88
1050	17.50	16.63	1.39	2.39	17.50	2.39	64.15	1050	16	5	16.63	28.63
1080	18.00	16.38	1.36	2.36	18.00	2.36	63.59	1080	16	3	16.38	28.38
1110	18.50	16.13	1.34	2.34	18.50	2.34	63.03	1110	16	1	16.13	28.13
1130	18.83	16.00	1.33	2.33	18.83	2.33	62.75	1130	16	0	16.00	28.00
1160	19.33	15.63	1.30	2.30	19.33	2.30	61.90	1160	15	5	15.63	27.63
1190	19.83	15.38	1.28	2.28	19.83	2.28	61.34	1190	15	3	15.38	27.38
1220	20.33	15.13	1.26	2.26	20.33	2.26	60.78	1220	15	1	15.13	27.13
1250	20.83	14.75	1.23	2.23	20.83	2.23	59.94	1250	14	6	14.75	26.75
1280	21.33	14.50	1.21	2.21	21.33	2.21	59.38	1280	14	4	14.50	26.50
1310	21.83	14.25	1.19	2.19	21.83	2.19	58.82	1310	14	2	14.25	26.25
1340	22.33	14.00	1.17	2.17	22.33	2.17	58.26	1340	14	0	14.00	26.00
1370	22.83	13.75	1.15	2.15	22.83	2.15	57.70	1370	13	6	13.75	25.75
1400	23.33	13.38	1.11	2.11	23.33	2.11	56.86	1400	13	3	13.38	25.38
1430	23.83	13.13	1.09	2.09	23.83	2.09	56.30	1430	13	1	13.13	25.13
1460	24.33	12.88	1.07	2.07	24.33	2.07	55.74	1460	12	7	12.88	24.88
1490	24.83	12.63	1.05	2.05	24.83	2.05	55.18	1490	12	5	12.63	24.63
1520	25.33	12.38	1.03	2.03	25.33	2.03	54.62	1520	12	3	12.38	24.38
1550	25.83	12.13	1.01	2.01	25.83	2.01	54.06	1550	12	1	12.13	24.13
1580	26.33	11.88	0.99	1.99	26.33	1.99	53.50	1580	11	7	11.88	23.88
1610	26.83	11.63	0.97	1.97	26.83	1.97	52.94	1610	11	5	11.63	23.63

Lawrence Rail Trail
Lawrence, MA
Project 274047
Page: 8 of 18

Calculated by: EG Date: 7/24/2019
Checked by: GAM Date: 7/24/2019
Revision: 0
Status: Preliminary

Time		Height			Results			INPUTS				
Seconds	Minutes	Inches	Feet	Feet + Initial Depth	Time (Minutes)	Relative Piezometric Head (Feet)	Percent of Initial Head	Time	Sight Tube Reading, inches	Sight Tube Reading, 8ths	Sight Tube Depth, inches	Total Head, inches
1640	27.33	11.38	0.95	1.95	27.33	1.95	52.38	1640	11	3	11.38	23.38
1670	27.83	11.13	0.93	1.93	27.83	1.93	51.82	1670	11	1	11.13	23.13
1700	28.33	10.88	0.91	1.91	28.33	1.91	51.26	1700	10	7	10.88	22.88
1730	28.83	10.63	0.89	1.89	28.83	1.89	50.70	1730	10	5	10.63	22.63
1760	29.33	10.38	0.86	1.86	29.33	1.86	50.14	1760	10	3	10.38	22.38
1790	29.83	10.13	0.84	1.84	29.83	1.84	49.58	1790	10	1	10.13	22.13
1820	30.33	10.00	0.83	1.83	30.33	1.83	49.30	1820	10	0	10.00	22.00
1850	30.83	9.75	0.81	1.81	30.83	1.81	48.74	1850	9	6	9.75	21.75
1880	31.33	9.50	0.79	1.79	31.33	1.79	48.18	1880	9	4	9.50	21.50
1910	31.83	9.38	0.78	1.78	31.83	1.78	47.90	1910	9	3	9.38	21.38
1940	32.33	9.25	0.77	1.77	32.33	1.77	47.62	1940	9	2	9.25	21.25
1970	32.83	9.00	0.75	1.75	32.83	1.75	47.06	1970	9	0	9.00	21.00
2000	33.33	8.88	0.74	1.74	33.33	1.74	46.78	2000	8	7	8.88	20.88
2030	33.83	8.75	0.73	1.73	33.83	1.73	46.50	2030	8	6	8.75	20.75
2060	34.33	8.50	0.71	1.71	34.33	1.71	45.94	2060	8	4	8.50	20.50
2090	34.83	8.25	0.69	1.69	34.83	1.69	45.38	2090	8	2	8.25	20.25
2120	35.33	8.00	0.67	1.67	35.33	1.67	44.82	2120	8	0	8.00	20.00
2150	35.83	7.88	0.66	1.66	35.83	1.66	44.54	2150	7	7	7.88	19.88
2180	36.33	7.75	0.65	1.65	36.33	1.65	44.26	2180	7	6	7.75	19.75
2210	36.83	7.63	0.64	1.64	36.83	1.64	43.98	2210	7	5	7.63	19.63
2290	38.17	7.50	0.63	1.63	38.17	1.63	43.70	2290	7	4	7.50	19.50
2270	37.83	7.25	0.60	1.60	37.83	1.60	43.14	2270	7	2	7.25	19.25
2300	38.33	7.00	0.58	1.58	38.33	1.58	42.58	2300	7	0	7.00	19.00
2330	38.83	6.88	0.57	1.57	38.83	1.57	42.30	2330	6	7	6.88	18.88
2360	39.33	6.75	0.56	1.56	39.33	1.56	42.02	2360	6	6	6.75	18.75
2390	39.83	6.63	0.55	1.55	39.83	1.55	41.74	2390	6	5	6.63	18.63
2420	40.33	6.50	0.54	1.54	40.33	1.54	41.46	2420	6	4	6.50	18.50
2450	40.83	6.38	0.53	1.53	40.83	1.53	41.18	2450	6	3	6.38	18.38
2480	41.33	6.13	0.51	1.51	41.33	1.51	40.62	2480	6	1	6.13	18.13
2510	41.83	6.00	0.50	1.50	41.83	1.50	40.34	2510	6	0	6.00	18.00
2540	42.33	5.75	0.48	1.48	42.33	1.48	39.78	2540	5	6	5.75	17.75
2570	42.83	5.63	0.47	1.47	42.83	1.47	39.50	2570	5	5	5.63	17.63
2600	43.33	5.50	0.46	1.46	43.33	1.46	39.22	2600	5	4	5.50	17.50
2630	43.83	5.25	0.44	1.44	43.83	1.44	38.66	2630	5	2	5.25	17.25
2660	44.33	5.13	0.43	1.43	44.33	1.43	38.38	2660	5	1	5.13	17.13
2690	44.83	5.00	0.42	1.42	44.83	1.42	38.10	2690	5	0	5.00	17.00
2720	45.33	4.88	0.41	1.41	45.33	1.41	37.82	2720	4	7	4.88	16.88
2730	45.50	4.75	0.40	1.40	45.50	1.40	37.54	2730	4	6	4.75	16.75
2760	46.00	4.75	0.40	1.40	46.00	1.40	37.54	2760	4	6	4.75	16.75
2790	46.50	4.63	0.39	1.39	46.50	1.39	37.25	2790	4	5	4.63	16.63
2820	47.00	4.63	0.39	1.39	47.00	1.39	37.25	2820	4	5	4.63	16.63
2850	47.50	4.63	0.39	1.39	47.50	1.39	37.25	2850	4	5	4.63	16.63
2880	48.00	4.50	0.38	1.38	48.00	1.38	36.97	2880	4	4	4.50	16.50
2910	48.50	4.50	0.38	1.38	48.50	1.38	36.97	2910	4	4	4.50	16.50
2940	49.00	4.50	0.38	1.38	49.00	1.38	36.97	2940	4	4	4.50	16.50
2970	49.50	4.38	0.36	1.36	49.50	1.36	36.69	2970	4	3	4.38	16.38
3000	50.00	4.38	0.36	1.36	50.00	1.36	36.69	3000	4	3	4.38	16.38

Permeability Calculations:

Variable Head Method:

	inch/min	inch/hour	feet/day	cm/sec
K_m=	2.29E-02	1.37	2.75	9.70E-04

Variable Head permeability, Flush Bottom in Uniform Soil (Hvorslev Case C)
K_m = mean coefficient of permeability
$K_m = [(pi*D)/(11*(t2-t1))]*ln((H1)/(H2))$

D (diameter of pipe) = 4 inches
K_m = **1.37** **inch/hour** (approximation using Variable Head Method)

Basic Time-Lag Method:

			inch/min	inch/hour	feet/day	cm/sec
T=	45.00	K_m=	2.54E-02	1.52	3.05	1.07E-03

Basic Time Lag Method - Flush Bottom in Uniform Soil (Hvorslev Case C)
Km = mean coefficient of permeability

Km = (pi*D)/(11*T)

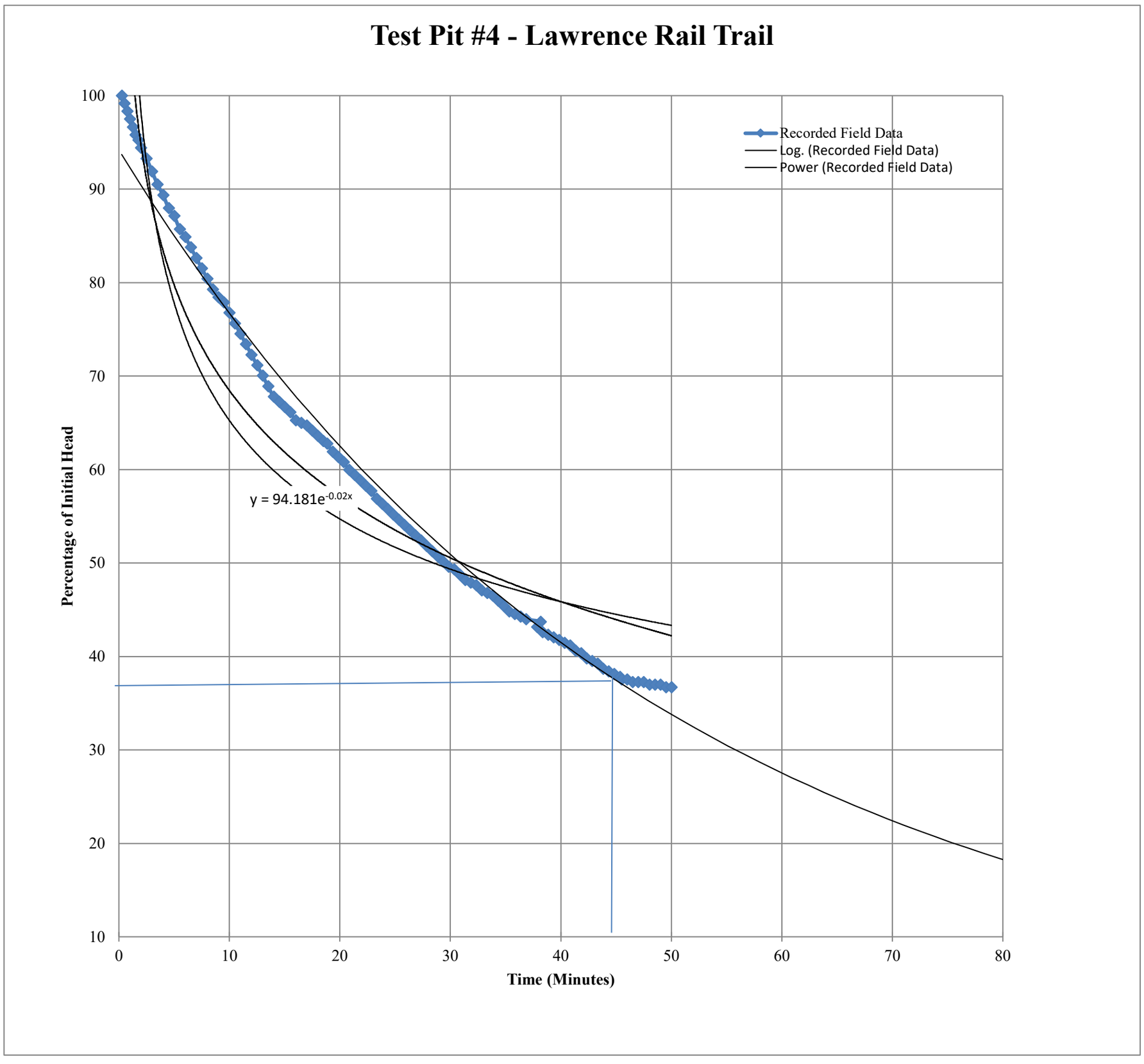

Permeability Calculations:

Objective: Calculate permeability and infiltration rate for Test Pit TP-5.

Approach: Use the Variable Head & Basic Time-Lag methods to calculate the permeability in inches/hour.

References: 1. Exploration Location Plan provided by TEC.
2. Time Lag and Soil Permeability, Hsorlev (1951).

Groundwater: 1. Seasonal High Groundwater Not Encountered.
2. Groundwater encountered at 3.5 feet.

Solution:

Test Location	TP-5
Test Number	1
Test Depth	1.5'
Elevation (NAVD88)	49
Date	7/12/2017

Initial depth =	**12**	inches below sight tube
Diameter of pipe =	**4**	inches

USDA: Sand
Burmister: Brown fine to medium SAND, little fine to coarse Gravel

Time		Height			Results			INPUTS				
Seconds	Minutes	Inches	Feet	Feet + Initial Depth	Time (Minutes)	Relative Piezometric Head (Feet)	Percent of Initial Head	Time	Sight Tube Reading, inches	Sight Tube Reading, 8ths	Sight Tube Depth, inches	Total Head, inches
15	0.25	27.00	2.25	3.25	0.25	3.25	100.00	15	27	0	27.00	39.00
30	0.50	22.88	1.91	2.91	0.50	2.91	89.42	30	22	7	22.88	34.88
45	0.75	18.88	1.57	2.57	0.75	2.57	79.17	45	18	7	18.88	30.88
60	1.00	15.75	1.31	2.31	1.00	2.31	71.15	60	15	6	15.75	27.75
75	1.25	13.25	1.10	2.10	1.25	2.10	64.74	75	13	2	13.25	25.25
90	1.50	11.00	0.92	1.92	1.50	1.92	58.97	90	11	0	11.00	23.00
105	1.75	8.50	0.71	1.71	1.75	1.71	52.56	105	8	4	8.50	20.50
120	2.00	6.63	0.55	1.55	2.00	1.55	47.76	120	6	5	6.63	18.63
135	2.25	4.88	0.41	1.41	2.25	1.41	43.27	135	4	7	4.88	16.88
150	2.50	3.25	0.27	1.27	2.50	1.27	39.10	150	3	2	3.25	15.25
165	2.75	1.88	0.16	1.16	2.75	1.16	35.58	165	1	7	1.88	13.88

Permeability Calculations:

Variable Head Method:

	inch/min	inch/hour	feet/day	cm/sec
K_m=	4.29E-01	25.76	51.52	1.82E-02

Variable Head permeability, Flush Bottom in Uniform Soil (Hvorslev Case C)
K_m = mean coefficient of permeability
K_m = [(pi*D)/(11*(t2-t1))]*ln((H1)/(H2))

D (diameter of pipe) = 4 inches
K_m = **25.76** **inch/hour** (approximation using Variable Head Method)

Basic Time-Lag Method:

			inch/min	inch/hour	feet/day	cm/sec
T=	2.60	K_m=	4.39E-01	26.36	52.73	1.86E-02

Basic Time Lag Method - Flush Bottom in Uniform Soil (Hvorslev Case C)
Km = mean coefficient of permeability

Km = (pi*D)/(11*T)

T= ln(*%FallingHead / y-intercept*)/*exponentslope*

D (diameter of pipe) = 4 inches
K_m = **26.36** **inch/hour** (approximation using Basic Time Lag Method)

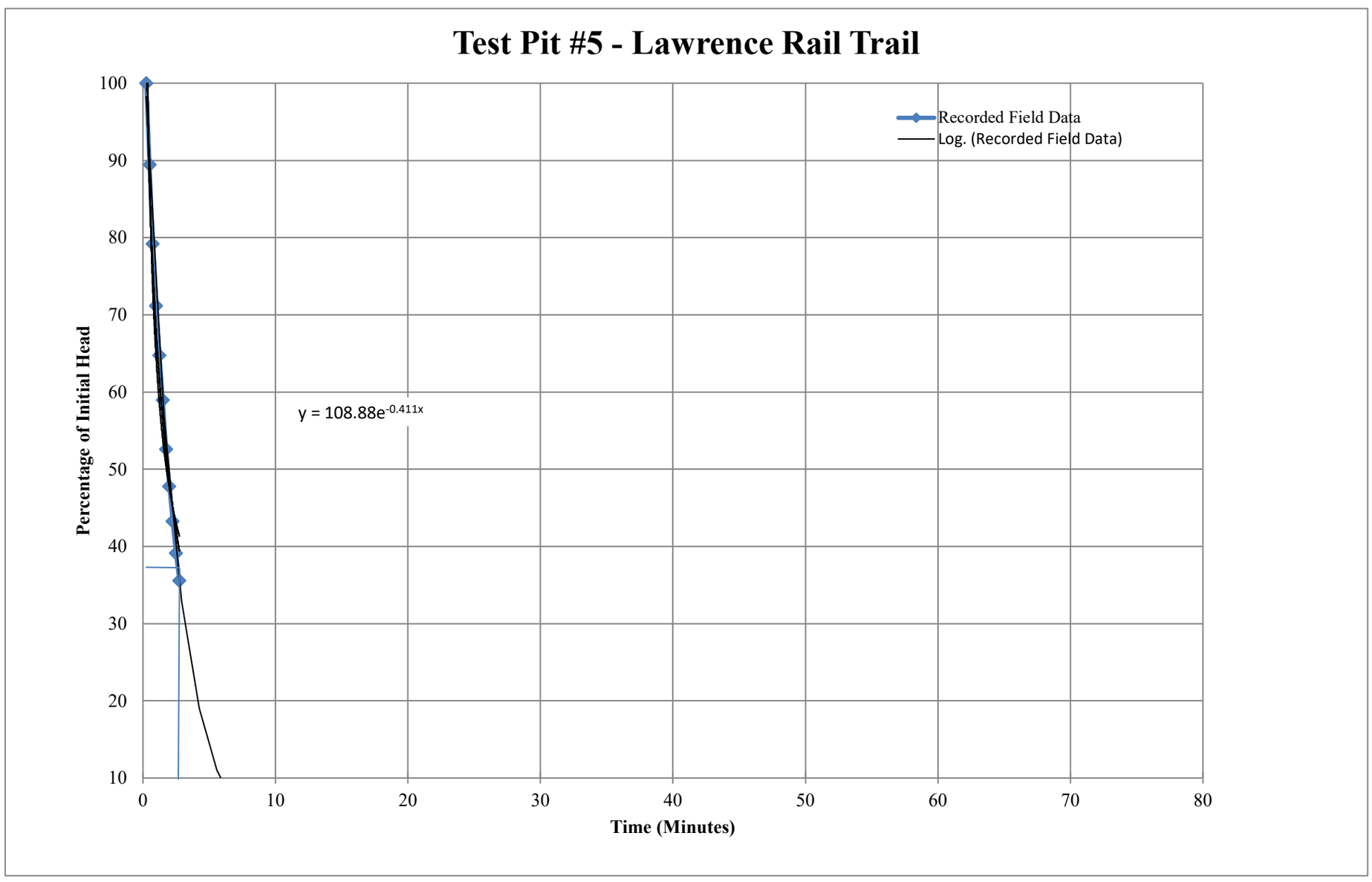

Permeability Calculations:

Objective: Calculate permeability and infiltration rate for Test Pit TP-6.

Approach: Use the Variable Head & Basic Time-Lag methods to calculate the permeability in inches/hour.

References: 1. Exploration Location Plan provided by TEC.
2. Time Lag and Soil Permeability, Hsorlev (1951).

Groundwater: 1. Seasonal High Groundwater Not Encountered.
2. Groundwater not encountered to 9 feet bgs.

Solution:

Test Location	TP-6
Test Number	1
Test Depth	4.5'
Elevation (NAVD88)	47
Date	7/12/2017

Initial depth =	**12**	inches below sight tube
Diameter of pipe =	**4**	inches

USDA: Sandy Loam
Burmister: Brown fine to medium SAND.

Time		Height			Results			INPUTS				
Seconds	Minutes	Inches	Feet	Feet + Initial Depth	Time (Minutes)	Relative Piezometric Head (Feet)	Percent of Initial Head	Time	Sight Tube Reading, inches	Sight Tube Reading, 8ths	Sight Tube Depth, inches	Total Head, inches
15	0.25	32.63	2.72	3.72	0.25	3.72	100.00	15	32	5	32.63	44.63
30	0.50	32.25	2.69	3.69	0.50	3.69	99.16	30	32	2	32.25	44.25
45	0.75	31.75	2.65	3.65	0.75	3.65	98.04	45	31	6	31.75	43.75
60	1.00	31.50	2.63	3.63	1.00	3.63	97.48	60	31	4	31.50	43.50
75	1.25	31.25	2.60	3.60	1.25	3.60	96.92	75	31	2	31.25	43.25
90	1.50	30.88	2.57	3.57	1.50	3.57	96.08	90	30	7	30.88	42.88
105	1.75	30.63	2.55	3.55	1.75	3.55	95.52	105	30	5	30.63	42.63
120	2.00	30.38	2.53	3.53	2.00	3.53	94.96	120	30	3	30.38	42.38
135	2.25	30.13	2.51	3.51	2.25	3.51	94.40	135	30	1	30.13	42.13
150	2.50	29.75	2.48	3.48	2.50	3.48	93.56	150	29	6	29.75	41.75
165	2.75	29.50	2.46	3.46	2.75	3.46	93.00	165	29	4	29.50	41.50
180	3.00	29.25	2.44	3.44	3.00	3.44	92.44	180	29	2	29.25	41.25
195	3.25	29.00	2.42	3.42	3.25	3.42	91.88	195	29	0	29.00	41.00
210	3.50	28.75	2.40	3.40	3.50	3.40	91.32	210	28	6	28.75	40.75
225	3.75	28.50	2.38	3.38	3.75	3.38	90.76	225	28	4	28.50	40.50
240	4.00	28.25	2.35	3.35	4.00	3.35	90.20	240	28	2	28.25	40.25
270	4.50	27.63	2.30	3.30	4.50	3.30	88.80	270	27	5	27.63	39.63
300	5.00	27.25	2.27	3.27	5.00	3.27	87.96	300	27	2	27.25	39.25
330	5.50	26.75	2.23	3.23	5.50	3.23	86.83	330	26	6	26.75	38.75
360	6.00	26.38	2.20	3.20	6.00	3.20	85.99	360	26	3	26.38	38.38
390	6.50	25.75	2.15	3.15	6.50	3.15	84.59	390	25	6	25.75	37.75
420	7.00	25.25	2.10	3.10	7.00	3.10	83.47	420	25	2	25.25	37.25
450	7.50	24.88	2.07	3.07	7.50	3.07	82.63	450	24	7	24.88	36.88
480	8.00	24.50	2.04	3.04	8.00	3.04	81.79	480	24	4	24.50	36.50
510	8.50	24.13	2.01	3.01	8.50	3.01	80.95	510	24	1	24.13	36.13
540	9.00	23.75	1.98	2.98	9.00	2.98	80.11	540	23	6	23.75	35.75
570	9.50	23.25	1.94	2.94	9.50	2.94	78.99	570	23	2	23.25	35.25
600	10.00	22.88	1.91	2.91	10.00	2.91	78.15	600	22	7	22.88	34.88
630	10.50	22.50	1.88	2.88	10.50	2.88	77.31	630	22	4	22.50	34.50
660	11.00	22.13	1.84	2.84	11.00	2.84	76.47	660	22	1	22.13	34.13
690	11.50	21.75	1.81	2.81	11.50	2.81	75.63	690	21	6	21.75	33.75
720	12.00	21.38	1.78	2.78	12.00	2.78	74.79	720	21	3	21.38	33.38
750	12.50	21.00	1.75	2.75	12.50	2.75	73.95	750	21	0	21.00	33.00
780	13.00	20.63	1.72	2.72	13.00	2.72	73.11	780	20	5	20.63	32.63
810	13.50	20.25	1.69	2.69	13.50	2.69	72.27	810	20	2	20.25	32.25
840	14.00	19.88	1.66	2.66	14.00	2.66	71.43	840	19	7	19.88	31.88
870	14.50	19.50	1.63	2.63	14.50	2.63	70.59	870	19	4	19.50	31.50
900	15.00	19.13	1.59	2.59	15.00	2.59	69.75	900	19	1	19.13	31.13
930	15.50	18.75	1.56	2.56	15.50	2.56	68.91	930	18	6	18.75	30.75
960	16.00	18.25	1.52	2.52	16.00	2.52	67.79	960	18	2	18.25	30.25
990	16.50	17.88	1.49	2.49	16.50	2.49	66.95	990	17	7	17.88	29.88
1020	17.00	17.38	1.45	2.45	17.00	2.45	65.83	1020	17	3	17.38	29.38
1050	17.50	17.00	1.42	2.42	17.50	2.42	64.99	1050	17	0	17.00	29.00
1080	18.00	16.63	1.39	2.39	18.00	2.39	64.15	1080	16	5	16.63	28.63
1110	18.50	16.25	1.35	2.35	18.50	2.35	63.31	1110	16	2	16.25	28.25
1140	19.00	15.75	1.31	2.31	19.00	2.31	62.18	1140	15	6	15.75	27.75
1170	19.50	15.38	1.28	2.28	19.50	2.28	61.34	1170	15	3	15.38	27.38
1200	20.00	14.88	1.24	2.24	20.00	2.24	60.22	1200	14	7	14.88	26.88
1230	20.50	14.38	1.20	2.20	20.50	2.20	59.10	1230	14	3	14.38	26.38
1260	21.00	14.00	1.17	2.17	21.00	2.17	58.26	1260	14	0	14.00	26.00
1290	21.50	13.63	1.14	2.14	21.50	2.14	57.42	1290	13	5	13.63	25.63
1320	22.00	13.13	1.09	2.09	22.00	2.09	56.30	1320	13	1	13.13	25.13
1350	22.50	12.75	1.06	2.06	22.50	2.06	55.46	1350	12	6	12.75	24.75

Time		Height			Results			INPUTS				
Seconds	Minutes	Inches	Feet	Feet + Initial Depth	Time (Minutes)	Relative Piezometric Head (Feet)	Percent of Initial Head	Time	Sight Tube Reading, inches	Sight Tube Reading, 8ths	Sight Tube Depth, inches	Total Head, inches
1380	23.00	12.38	1.03	2.03	23.00	2.03	54.62	1380	12	3	12.38	24.38
1410	23.50	12.00	1.00	2.00	23.50	2.00	53.78	1410	12	0	12.00	24.00
1440	24.00	11.75	0.98	1.98	24.00	1.98	53.22	1440	11	6	11.75	23.75
1470	24.50	11.38	0.95	1.95	24.50	1.95	52.38	1470	11	3	11.38	23.38
1500	25.00	11.00	0.92	1.92	25.00	1.92	51.54	1500	11	0	11.00	23.00
1530	25.50	10.63	0.89	1.89	25.50	1.89	50.70	1530	10	5	10.63	22.63
1600	26.67	10.13	0.84	1.84	26.67	1.84	49.58	1600	10	1	10.13	22.13
1630	27.17	9.75	0.81	1.81	27.17	1.81	48.74	1630	9	6	9.75	21.75
1660	27.67	9.38	0.78	1.78	27.67	1.78	47.90	1660	9	3	9.38	21.38
1690	28.17	9.00	0.75	1.75	28.17	1.75	47.06	1690	9	0	9.00	21.00
1720	28.67	8.75	0.73	1.73	28.67	1.73	46.50	1720	8	6	8.75	20.75
1750	29.17	8.38	0.70	1.70	29.17	1.70	45.66	1750	8	3	8.38	20.38
1780	29.67	8.00	0.67	1.67	29.67	1.67	44.82	1780	8	0	8.00	20.00
1810	30.17	7.63	0.64	1.64	30.17	1.64	43.98	1810	7	5	7.63	19.63
1880	31.33	7.25	0.60	1.60	31.33	1.60	43.14	1880	7	2	7.25	19.25
1870	31.17	6.88	0.57	1.57	31.17	1.57	42.30	1870	6	7	6.88	18.88
1900	31.67	6.50	0.54	1.54	31.67	1.54	41.46	1900	6	4	6.50	18.50
1930	32.17	6.13	0.51	1.51	32.17	1.51	40.62	1930	6	1	6.13	18.13
1960	32.67	5.88	0.49	1.49	32.67	1.49	40.06	1960	5	7	5.88	17.88
1990	33.17	5.50	0.46	1.46	33.17	1.46	39.22	1990	5	4	5.50	17.50
2020	33.67	5.13	0.43	1.43	33.67	1.43	38.38	2020	5	1	5.13	17.13
2050	34.17	4.88	0.41	1.41	34.17	1.41	37.82	2050	4	7	4.88	16.88
2080	34.67	4.50	0.38	1.38	34.67	1.38	36.97	2080	4	4	4.50	16.50
2110	35.17	4.25	0.35	1.35	35.17	1.35	36.41	2110	4	2	4.25	16.25
2140	35.67	3.88	0.32	1.32	35.67	1.32	35.57	2140	3	7	3.88	15.88

Permeability Calculations:

Variable Head Method:

	inch/min	inch/hour	feet/day	cm/sec
K_m=	7.66E-03	0.46	0.92	3.24E-04

Variable Head permeability, Flush Bottom in Uniform Soil (Hvorslev Case C)
K_m = mean coefficient of permeability
K_m = [(pi*D)/(11*(t2-t1))]*ln((H1)/(H2))

D (diameter of pipe) = 4 inches
K_m = **0.46 inch/hour** (approximation using Variable Head Method)

Basic Time-Lag Method:

			inch/min	inch/hour	feet/day	cm/sec
T=	34.00	K_m=	3.36E-02	2.02	4.03	1.42E-03

Basic Time Lag Method - Flush Bottom in Uniform Soil (Hvorslev Case C)
Km = mean coefficient of permeability

Km = (pi*D)/(11*T)

T= ln(*%FallingHead / y-intercept*)/*exponentslope*

D (diameter of pipe) = 4 inches
K_m = **2.02 inch/hour** (approximation using Variable Head Method)

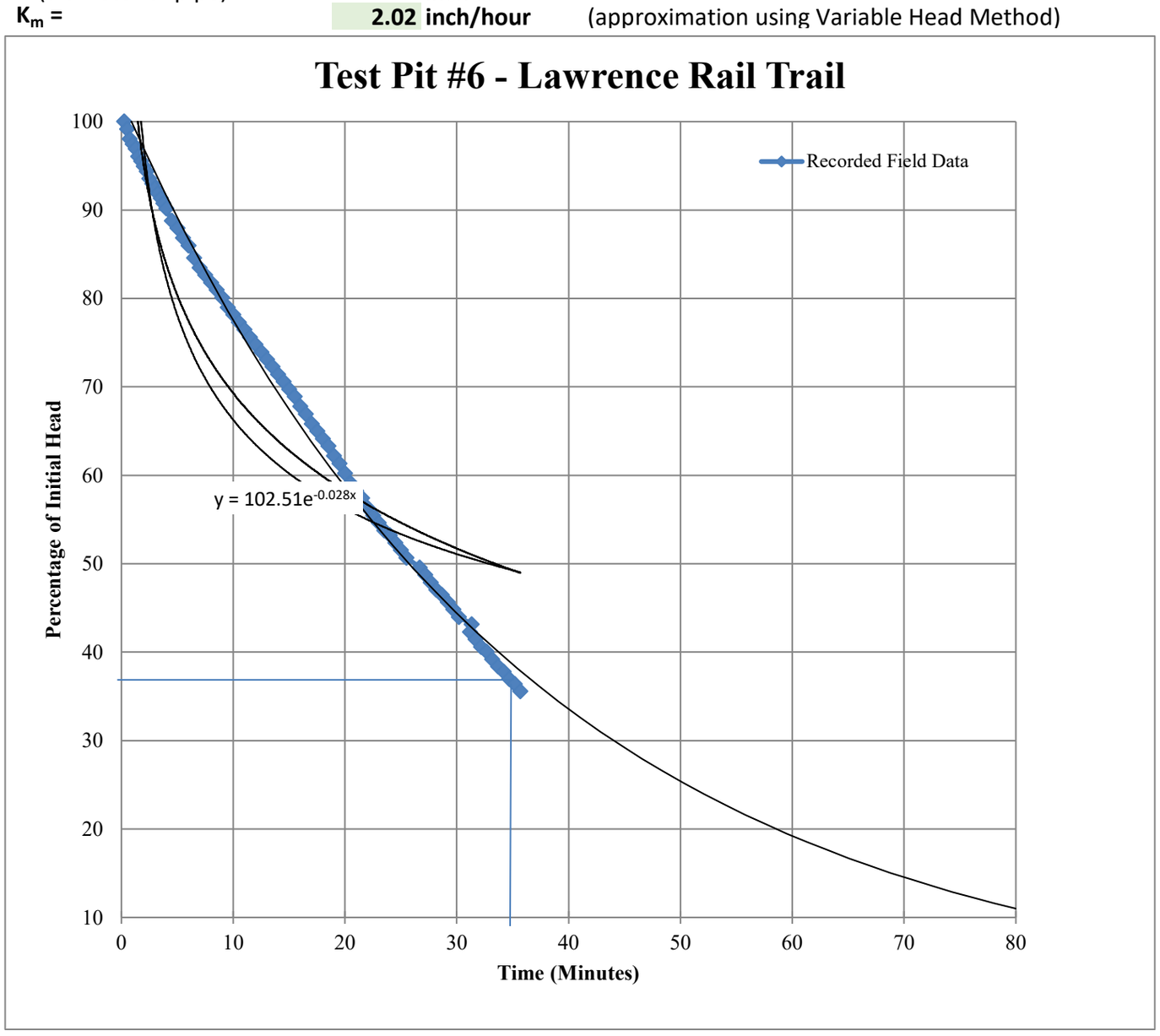

Permeability Calculations:

Objective: Calculate permeability and infiltration rate for Test Pit TP-7.

Approach: Use the Variable Head & Basic Time-Lag methods to calculate the permeability in inches/hour.

References: 1. Exploration Location Plan provided by TEC.
2. Time Lag and Soil Permeability, Hsorlev (1951).

Groundwater: 1. Seasonal High Groundwater Not Encountered.
2. Groundwater not encountered to 9 feet bgs.

Solution:

Test Location	TP-7
Test Number	1
Test Depth	4.5
Elevation (NAVD88)	46.5
Date	7/12/2017

Initial depth =	**12**	inches below sight tube
Diameter of pipe =	**4**	inches

USDA: Sand
Burmister: Light Brown fine SAND, trace fine to coarse Gravel

Time		Height			Results			Inputs				
Seconds	Minutes	Inches	Feet	Feet + Initial Depth	Time (Minutes)	Relative Piezometric Head (Feet)	Percent of Initial Head	Time	Sight Tube Reading, inches	Sight Tube Reading, 8ths	Sight Tube Depth, inches	Total Head, inches
15	0.25	28.25	2.35	3.35	0.25	3.35	100.00	15	28	2	28.25	40.25
30	0.50	24.50	2.04	3.04	0.50	3.04	90.68	30	24	4	24.50	36.50
45	0.75	21.00	1.75	2.75	0.75	2.75	81.99	45	21	0	21.00	33.00
60	1.00	17.88	1.49	2.49	1.00	2.49	74.22	60	17	7	17.88	29.88
75	1.25	15.00	1.25	2.25	1.25	2.25	67.08	75	15	0	15.00	27.00
90	1.50	12.38	1.03	2.03	1.50	2.03	60.56	90	12	3	12.38	24.38
105	1.75	9.88	0.82	1.82	1.75	1.82	54.35	105	9	7	9.88	21.88
120	2.00	7.88	0.66	1.66	2.00	1.66	49.38	120	7	7	7.88	19.88
135	2.25	6.00	0.50	1.50	2.25	1.50	44.72	135	6	0	6.00	18.00
150	2.50	4.38	0.36	1.36	2.50	1.36	40.68	150	4	3	4.38	16.38
165	2.75	2.50	0.21	1.21	2.75	1.21	36.02	165	2	4	2.50	14.50
180	3.00	1.00	0.08	1.08	3.00	1.08	32.30	180	1	0	1.00	13.00

Permeability Calculations:

Variable Head Method:

	inch/min	inch/hour	feet/day	cm/sec
K_m=	4.30E-01	25.82	51.64	1.82E-02

Variable Head permeability, Flush Bottom in Uniform Soil (Hvorslev Case C)
K_m = mean coefficient of permeability
K_m = [(pi*D)/(11*(t2-t1))]*ln((H1)/(H2))

D (diameter of pipe)= 4 inches
K_m = **25.82 inch/hour** (approximation using Variable Head Method)

Basic Time-Lag Method:

			inch/min	inch/hour	feet/day	cm/sec
T=	2.70	K_m=	4.23E-01	25.39	50.77	1.79E-02

Basic Time Lag Method - Flush Bottom in Uniform Soil (Hvorslev Case C)
Km = mean coefficient of permeability

Km = (pi*D)/(11*T)

T= ln(*%FallingHead / y-intercept*)/*exponentslope*

D (diameter of pipe)= 4 inches
K_m = **25.39 inch/hour** (approximation using Basic Time Lag Method)

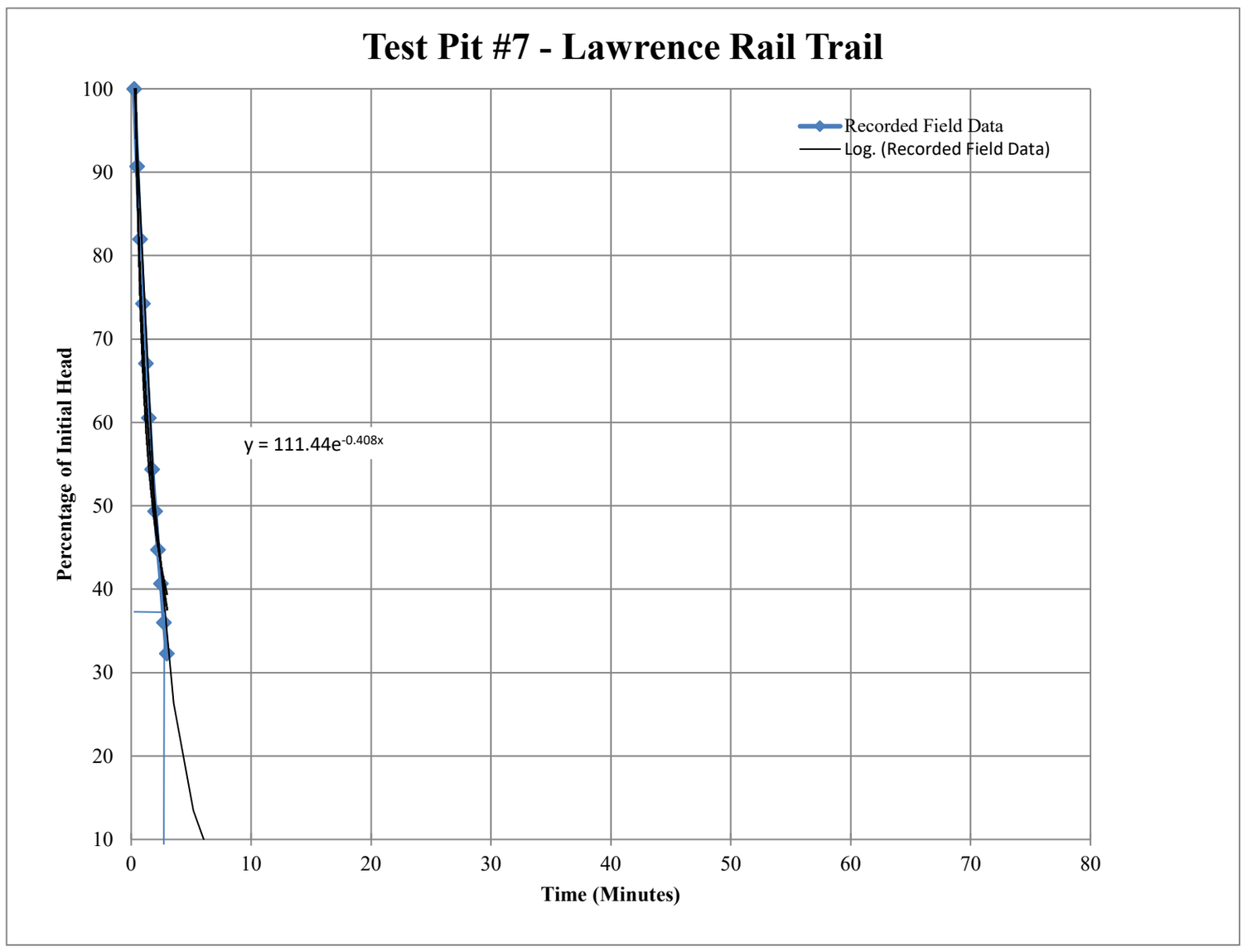

Permeability Calculations:

Objective: Calculate permeability and infiltration rate for Test Pit TP-8.

Approach: Use the Variable Head & Basic Time-Lag methods to calculate the permeability in inches/hour.

References: 1. Exploration Location Plan provided by TEC.
2. Time Lag and Soil Permeability, Hsorlev (1951).

Groundwater: 1. Seasonal High Groundwater Not Encountered.
2. Groundwater not encountered to 10 feet bgs.

Solution:

Test Location	TP-8
Test Number	1
Test Depth	4.5'
Elevation (NAVD88)	47
Date	7/13/2017

Initial depth =	**12**	inches below sight tube
Diameter of pipe =	**4**	inches

USDA: Sandy Loam
Burmister: Tan fine SAND, trace silt

Time		Height			Results			INPUTS				
Seconds	**Minutes**	**Inches**	**Feet**	**Feet + Initial Depth**	**Time (Minutes)**	**Relative Piezometric Head (Feet)**	**Percent of Initial Head**	**Time**	**Sight Tube Reading, inches**	**Sight Tube Reading, 8ths**	**Sight Tube Depth, inches**	**Total Head, inches**
15	0.25	29.13	2.43	3.43	0.25	3.43	100.00	15	29	1	29.13	41.13
30	0.50	27.00	2.25	3.25	0.50	3.25	94.83	30	27	0	27.00	39.00
45	0.75	24.63	2.05	3.05	0.75	3.05	89.06	45	24	5	24.63	36.63
60	1.00	22.50	1.88	2.88	1.00	2.88	83.89	60	22	4	22.50	34.50
75	1.25	20.13	1.68	2.68	1.25	2.68	78.12	75	20	1	20.13	32.13
90	1.50	18.13	1.51	2.51	1.50	2.51	73.25	90	18	1	18.13	30.13
105	1.75	16.13	1.34	2.34	1.75	2.34	68.39	105	16	1	16.13	28.13
120	2.00	13.63	1.14	2.14	2.00	2.14	62.31	120	13	5	13.63	25.63
135	2.25	12.00	1.00	2.00	2.25	2.00	58.36	135	12	0	12.00	24.00
150	2.50	10.13	0.84	1.84	2.50	1.84	53.80	150	10	1	10.13	22.13
165	2.75	8.25	0.69	1.69	2.75	1.69	49.24	165	8	2	8.25	20.25
180	3.00	6.38	0.53	1.53	3.00	1.53	44.68	180	6	3	6.38	18.38
195	3.25	4.50	0.38	1.38	3.25	1.38	40.12	195	4	4	4.5	16.50
210	3.50	2.50	0.21	1.21	3.50	1.21	35.26	210	2	4	2.5	14.50
225	3.75	0.63	0.05	1.05	3.75	1.05	30.70	225	0	5	0.6	12.63

Permeability Calculations:

Variable Head Method:

	inch/min	inch/hour	feet/day	cm/sec
K_m=	**3.60E-01**	**21.59**	**43.17**	**1.52E-02**

Variable Head permeability, Flush Bottom in Uniform Soil (Hvorslev Case C)
K_m = mean coefficient of permeability
$K_m = [(pi*D)/(11*(t2-t1))]*ln((H1)/(H2))$

D (diameter of pipe) = 4 inches
K_m = **21.59** **inch/hour** (approximation using Variable Head Method)

Basic Time-Lag Method:

			inch/min	inch/hour	feet/day	cm/sec
T=	3.49	K_m=	3.27E-01	19.64	39.28	1.39E-02

Basic Time Lag Method - Flush Bottom in Uniform Soil (Hvorslev Case C)
Km = mean coefficient of permeability

Km = (pi*D)/(11*T)

T= ln(*%FallingHead / y-intercept*)/*exponentslope*

D (diameter of pipe) = 4 inches
K_m = **19.64 inch/hour** (approximation using Basic Time Lag Method)

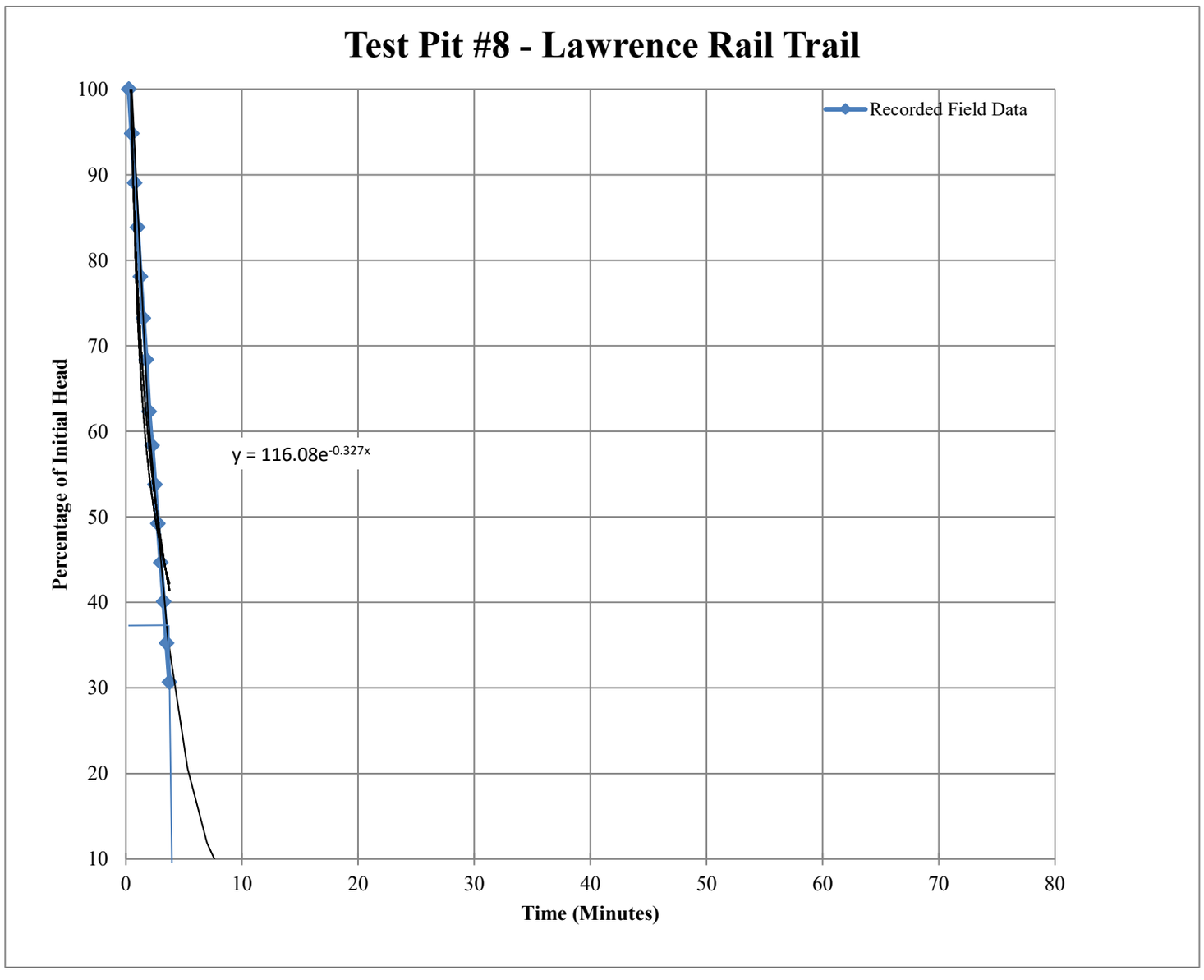

APPENDIX E – LABORATORY TEST RESULTS

USDA Soil Classification

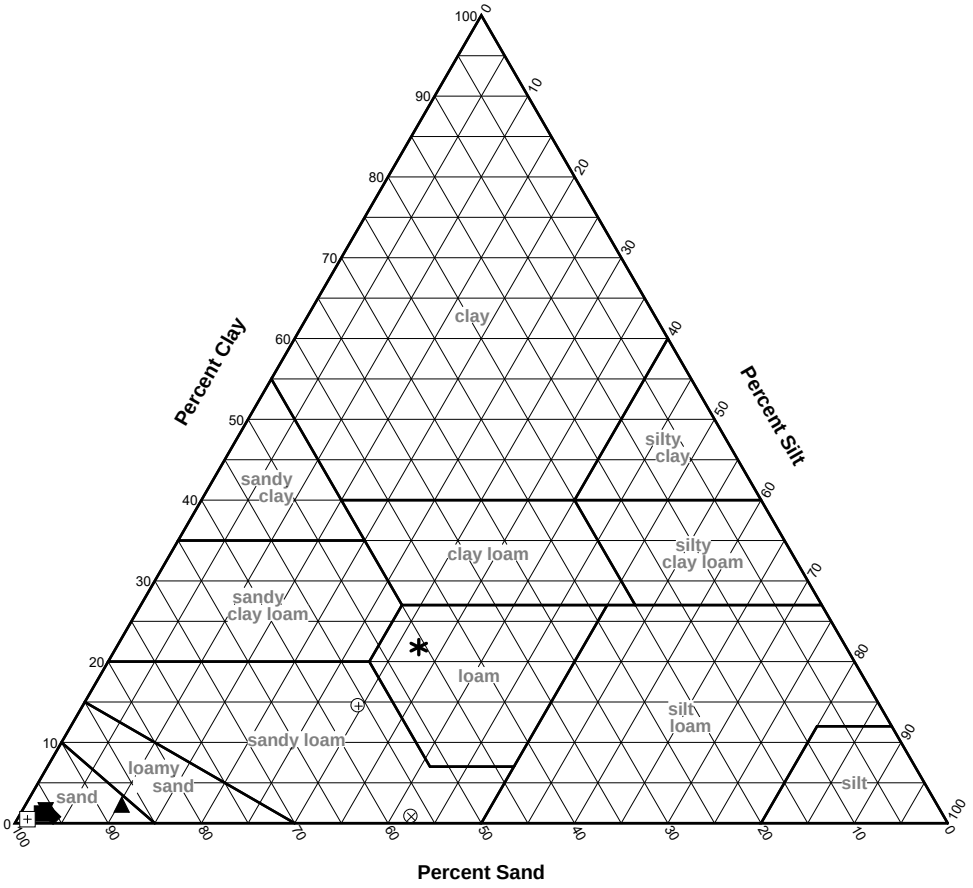

SOIL DATA							
	Source	Sample No.	Depth	Percentages From Material Passing a #10 Sieve			Classification
				Sand	Silt	Clay	
●	TP-1	BULK	4.5 FT	95.8	2.8	1.3	Sand
■	TP-2	BULK	4.5 FT	96.5	2.4	1.2	Sand
▲	TP-3	BULK	4.5 FT	87.4	10.3	2.3	Sand
◆	TP-4	BULK	4.5 FT	95.5	3.7	0.8	Sand
▼	TP-5	BULK 1	1.5 FT	95.9	2.5	1.6	Sand
✱	TP-5	BULK 2	4.5 FT	45.8	32.4	21.8	Loam
⊕	TP-6	BULK	4.5 FT	55.9	29.6	14.5	Sandy loam
⊞	TP-7	BULK	4.5 FT	98.4	1.1	0.5	Sand
⊗	TP-8	BULK	4.5 FT	57.1	42.1	0.8	Sandy loam

TRC
Engineers, Inc.
Mt. Laurel, NJ

Client: TEC, INC.
Project: MANCHESTER LAWRENCE RAIL CORRIDOR
Project No.: 274047 **Figure** 1

Particle Size Distribution Report

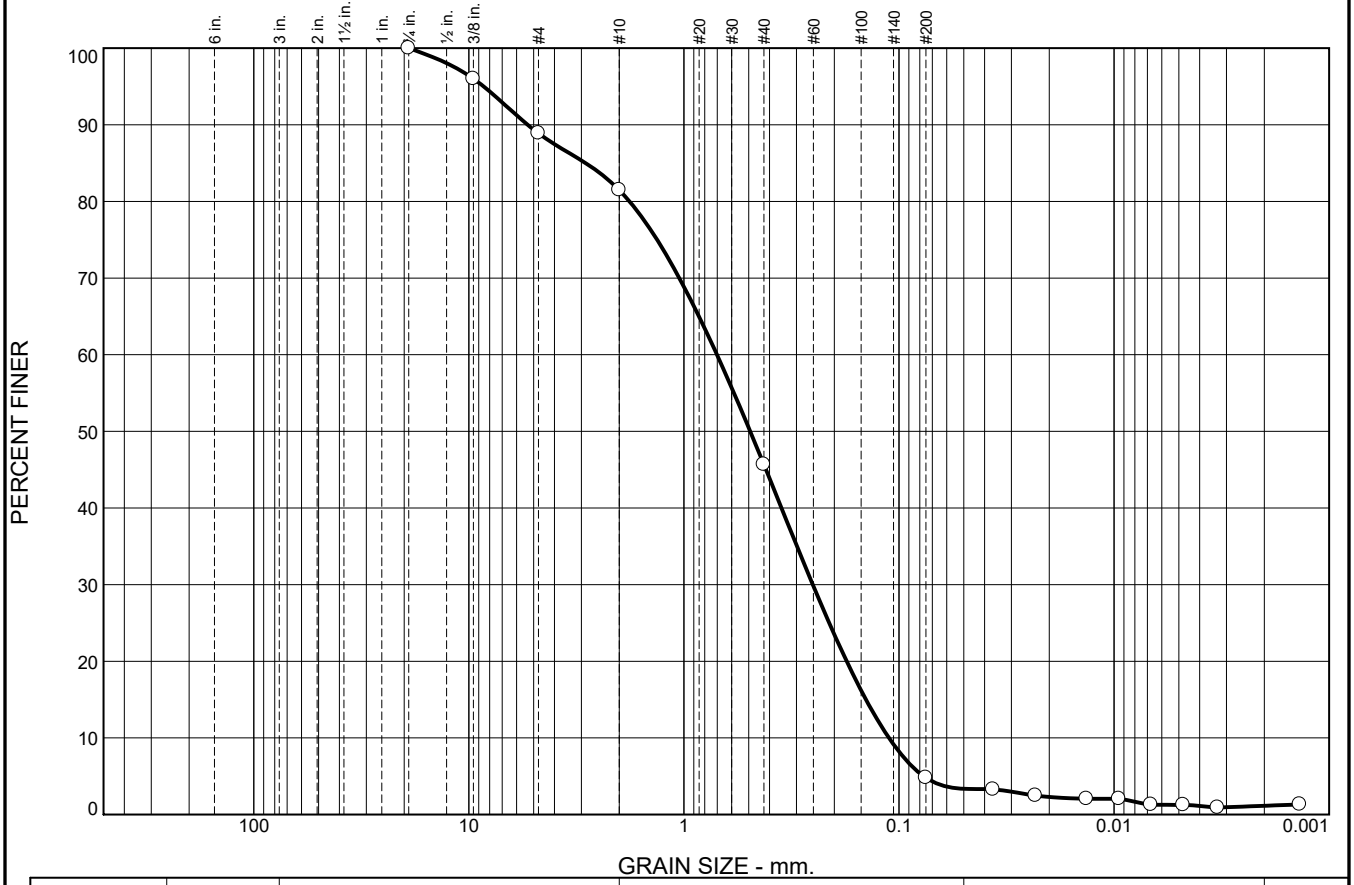

	% Stones	% +3"	% Gravel			% Sand					% Silt		% Clay
			Coarse	Medium	Fine	V. Crs.	Crs.	Med.	Fine	V. Fine	Crs.	Fine	
○	0.0	0.0	0.0	11.1	7.4	12.6	18.4	20.7	21.6	4.8	1.1	1.2	1.1

	LL	PL	D_{85}	D_{60}	D_{50}	D_{30}	D_{15}	D_{10}	C_c	C_u
○			2.8669	0.7022	0.4921	0.2516	0.1424	0.1113	0.81	6.31

MATERIAL DESCRIPTION	TEST DATE	USCS	NM
○ LIGHT BROWN SAND	07/27/17	SP	3.8

Project No. 274047 **Client:** TEC, INC.

Project: MANCHESTER LAWRENCE RAIL CORRIDOR

○ **Source of Sample:** TP-1 **Depth:** 4.5 FT **Sample Number:** BULK

Remarks:
○SAMPLE DESCRIPTION BASED ON USDA

TRC Engineers, Inc.

Mt. Laurel, NJ

Figure 2

Tested By: JJA 07/27/17 **Checked By:** PWK 08/07/17

Particle Size Distribution Report

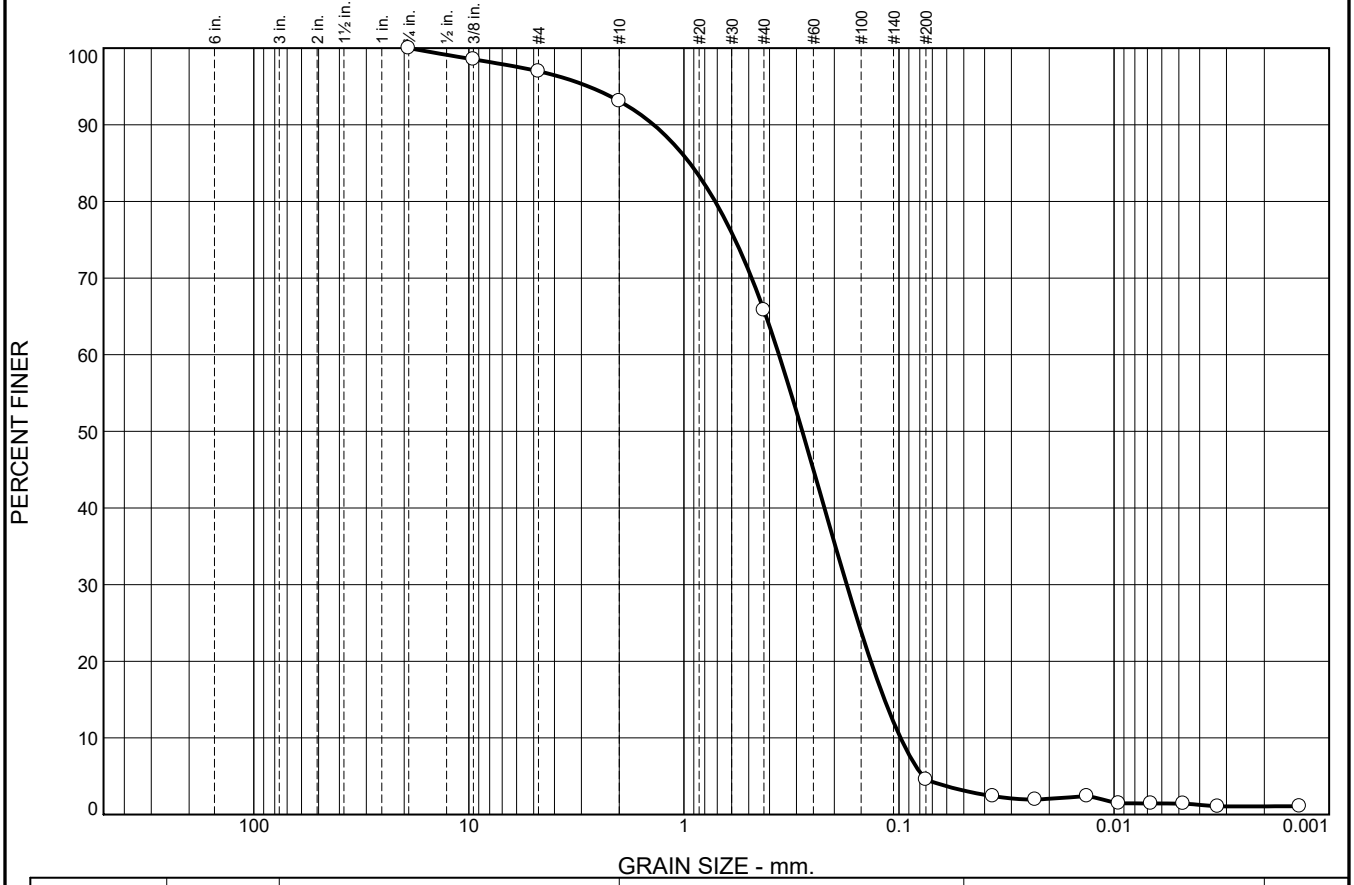

	% Stones	% +3"	% Gravel			% Sand					% Silt		% Clay
			Coarse	Medium	Fine	V. Crs.	Crs.	Med.	Fine	V. Fine	Crs.	Fine	
○	0.0	0.0	0.0	3.0	3.9	7.1	15.0	26.0	34.6	7.3	1.0	1.0	1.1

	LL	PL	D_{85}	D_{60}	D_{50}	D_{30}	D_{15}	D_{10}	C_c	C_u
○			0.9392	0.3616	0.2816	0.1751	0.1168	0.0983	0.86	3.68

MATERIAL DESCRIPTION	TEST DATE	USCS	NM
○ LIGHT BROWN SAND	07/27/17	SP	4.2

Project No. 274047 **Client:** TEC, INC.

Project: MANCHESTER LAWRENCE RAIL CORRIDOR

○ **Source of Sample:** TP-2 **Depth:** 4.5 FT **Sample Number:** BULK

Remarks:
○SAMPLE DESCRIPTION BASED ON USDA

TRC Engineers, Inc.

Mt. Laurel, NJ

Figure 3

Tested By: JJA 07/27/17 **Checked By:** PWK 08/07/17

Particle Size Distribution Report

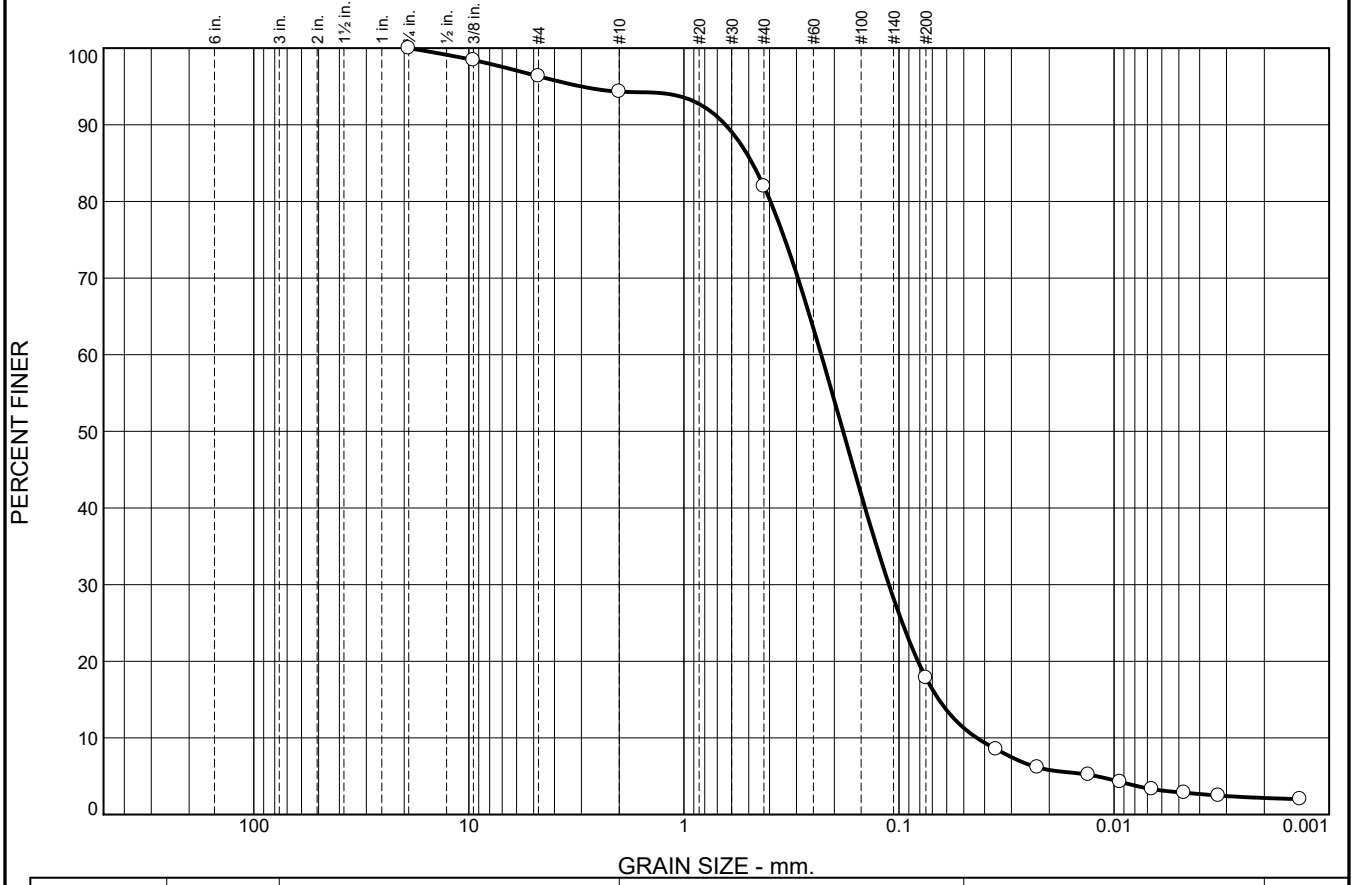

	% Stones	% +3"	% Gravel			% Sand					% Silt		% Clay
			Coarse	Medium	Fine	V. Crs.	Crs.	Med.	Fine	V. Fine	Crs.	Fine	
○	0.0	0.0	0.0	3.7	2.0	0.7	7.8	22.4	37.2	14.9	5.5	3.6	2.2

	LL	PL	D_{85}	D_{60}	D_{50}	D_{30}	D_{15}	D_{10}	C_c	C_u
○			0.4809	0.2300	0.1819	0.1114	0.0653	0.0435	1.24	5.29

MATERIAL DESCRIPTION	TEST DATE	USCS	NM
○ LIGHT BROWN SAND	07/27/17		4.9

Project No. 274047 **Client:** TEC, INC.
Project: MANCHESTER LAWRENCE RAIL CORRIDOR

○ **Source of Sample:** TP-3 **Depth:** 4.5 FT **Sample Number:** BULK

Remarks:
○SAMPLE DESCRIPTION BASED ON USDA

TRC Engineers, Inc.

Mt. Laurel, NJ

Figure 4

Tested By: JJA 07/27/17 **Checked By:** PWK 08/07/17

Particle Size Distribution Report

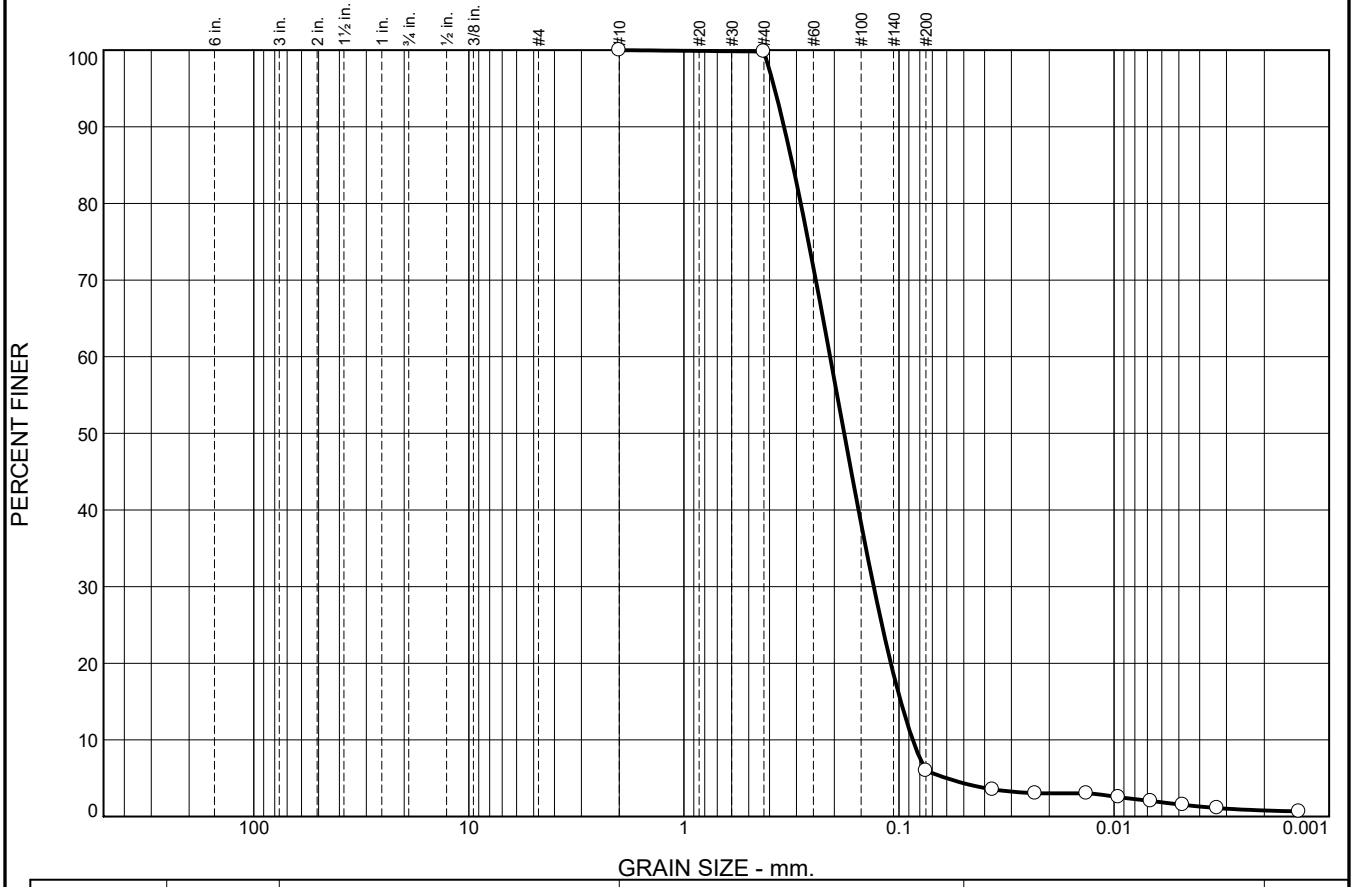

	% Stones	% +3"	% Gravel			% Sand					% Silt		% Clay
			Coarse	Medium	Fine	V. Crs.	Crs.	Med.	Fine	V. Fine	Crs.	Fine	
○	0.0	0.0	0.0	0.0	0.0	0.1	0.1	28.2	55.8	11.5	1.3	2.2	0.8

	LL	PL	D_{85}	D_{60}	D_{50}	D_{30}	D_{15}	D_{10}	C_c	C_u
○			0.3119	0.2091	0.1799	0.1311	0.0981	0.0863	0.95	2.42

MATERIAL DESCRIPTION	TEST DATE	USCS	NM
○ LIGHT BROWN SAND	07/27/17		24.2

Project No. 274047 **Client:** TEC, INC.

Project: MANCHESTER LAWRENCE RAIL CORRIDOR

○ **Source of Sample:** TP-4 **Depth:** 4.5 FT **Sample Number:** BULK

Remarks:

○SAMPLE DESCRIPTION BASED ON USDA

TRC Engineers, Inc.

Mt. Laurel, NJ

Figure 5

Tested By: JJA 07/27/17 **Checked By:** PWK 08/07/17

Particle Size Distribution Report

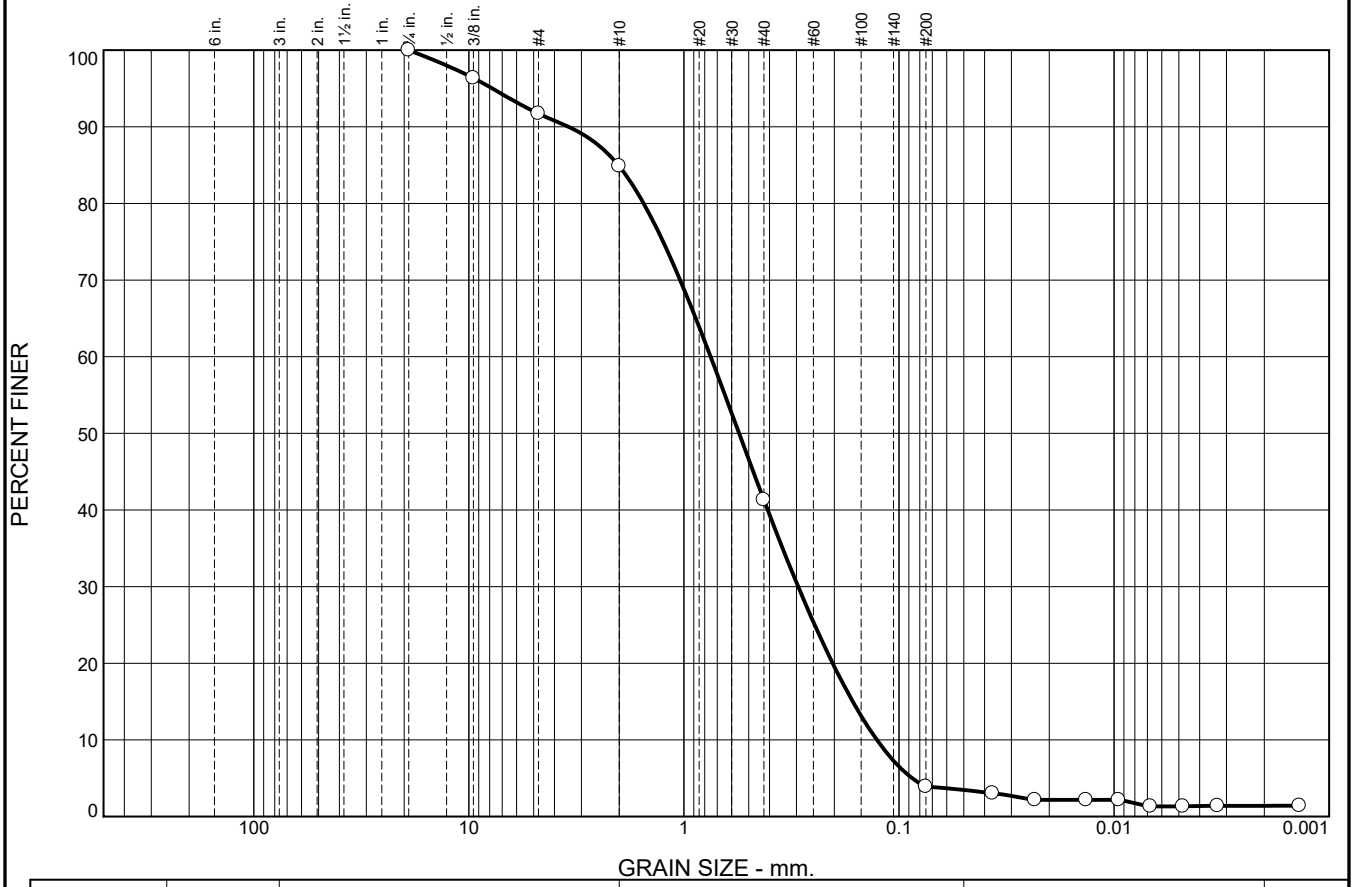

	% Stones	% +3"	% Gravel			% Sand					% Silt		% Clay
			Coarse	Medium	Fine	V. Crs.	Crs.	Med.	Fine	V. Fine	Crs.	Fine	
○	0.0	0.0	0.0	8.3	6.8	16.1	22.2	21.2	18.9	3.0	1.3	0.8	1.4

	LL	PL	D_{85}	D_{60}	D_{50}	D_{30}	D_{15}	D_{10}	C_c	C_u
○			2.0180	0.7517	0.5540	0.2943	0.1640	0.1267	0.91	5.93

MATERIAL DESCRIPTION	TEST DATE	USCS	NM
○ LIGHT BROWN TO BROWN SAND	07/27/17	SP	6.7

Project No. 274047 **Client:** TEC, INC.

Project: MANCHESTER LAWRENCE RAIL CORRIDOR

○ **Source of Sample:** TP-5 **Depth:** 1.5 FT **Sample Number:** BULK 1

Remarks:

○SAMPLE DESCRIPTION BASED ON USDA

TRC Engineers, Inc.

Mt. Laurel, NJ

Figure 6

Tested By: JJA 07/27/17 **Checked By:** PWK 08/07/17

Particle Size Distribution Report

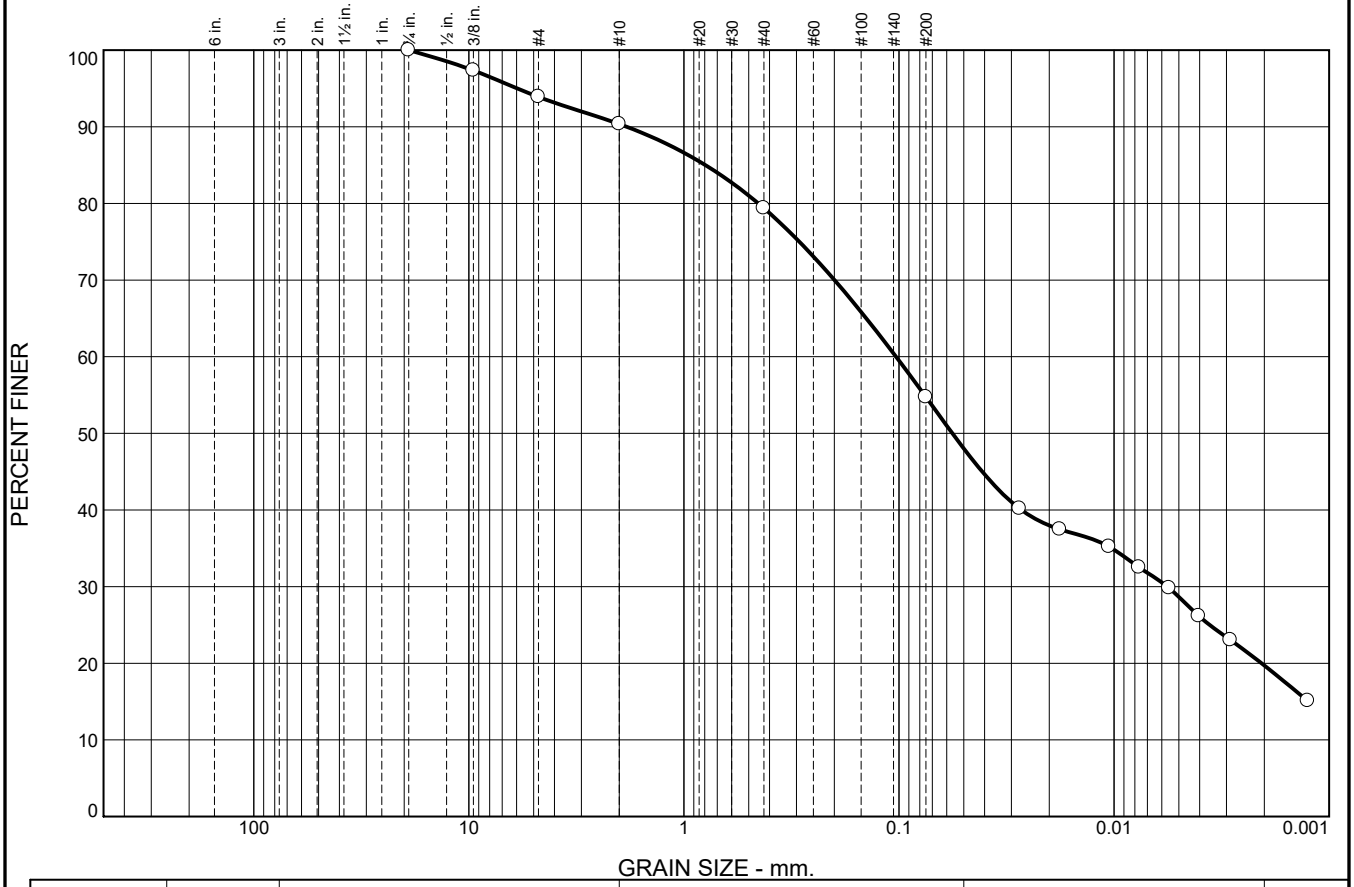

	% Stones	% +3"	% Gravel			% Sand					% Silt		% Clay
			Coarse	Medium	Fine	V. Crs.	Crs.	Med.	Fine	V. Fine	Crs.	Fine	
○	0.0	0.0	0.0	6.1	3.5	3.8	5.6	7.9	13.6	11.5	10.0	18.3	19.7

	LL	PL	D_{85}	D_{60}	D_{50}	D_{30}	D_{15}	D_{10}	C_c	C_u
○			0.7947	0.1032	0.0565	0.0056				

MATERIAL DESCRIPTION	TEST DATE	USCS	NM
○ OLIVE TO GRAY-BROWN LOAM	07/27/17		17.5

Project No. 274047 **Client:** TEC, INC.
Project: MANCHESTER LAWRENCE RAIL CORRIDOR

○ **Source of Sample:** TP-5 **Depth:** 4.5 FT **Sample Number:** BULK 2

Remarks:
○SAMPLE DESCRIPTION BASED ON USDA

TRC Engineers, Inc.

Mt. Laurel, NJ

Figure 7

Tested By: JJA 07/27/17 **Checked By:** PWK 08/07/17

Particle Size Distribution Report

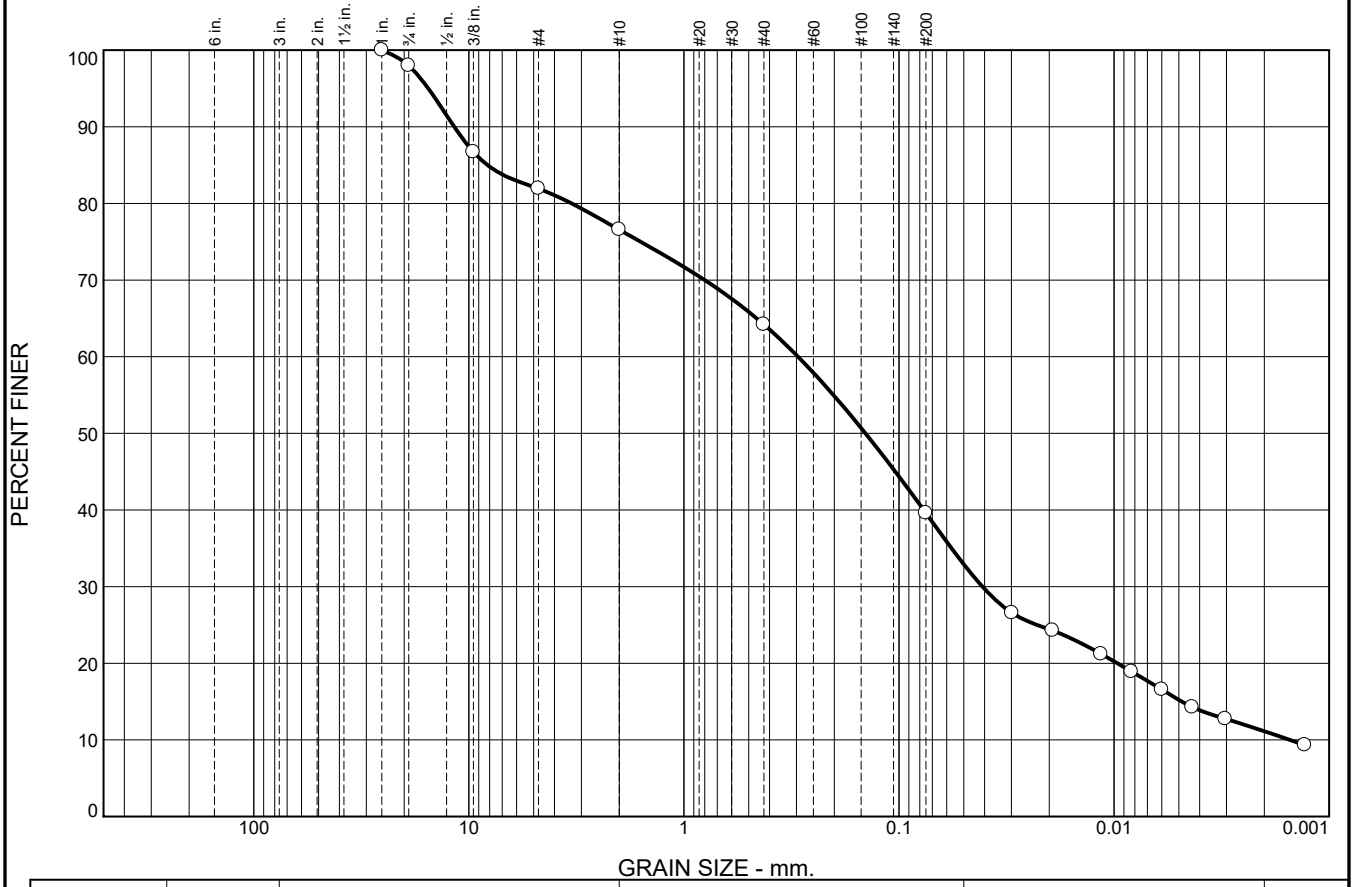

	% Stones	% +3"	% Gravel			% Sand					% Silt		% Clay
			Coarse	Medium	Fine	V. Crs.	Crs.	Med.	Fine	V. Fine	Crs.	Fine	
○	0.0	0.0	2.0	16.1	5.3	4.9	5.8	8.0	13.5	11.5	8.5	13.3	11.1

	LL	PL	D_{85}	D_{60}	D_{50}	D_{30}	D_{15}	D_{10}	C_c	C_u
○			8.1961	0.2948	0.1432	0.0409	0.0048	0.0015	3.74	193.99

MATERIAL DESCRIPTION	TEST DATE	USCS	NM
○ BROWN SANDY LOAM	07/27/17		11.9

Project No. 274047 **Client:** TEC, INC.
Project: MANCHESTER LAWRENCE RAIL CORRIDOR

○ **Source of Sample:** TP-6 **Depth:** 4.5 FT **Sample Number:** BULK

Remarks:
○SAMPLE DESCRIPTION BASED ON USDA

TRC Engineers, Inc.

Mt. Laurel, NJ

Figure 8

Tested By: JJA 07/27/17 **Checked By:** PWK 08/07/17

Particle Size Distribution Report

	% Stones	% +3"	% Gravel			% Sand					% Silt		% Clay
			Coarse	Medium	Fine	V. Crs.	Crs.	Med.	Fine	V. Fine	Crs.	Fine	
○	0.0	0.0	0.0	1.8	4.4	7.8	16.0	27.5	35.5	5.5	0.0	1.0	0.5

	LL	PL	D_{85}	D_{60}	D_{50}	D_{30}	D_{15}	D_{10}	C_c	C_u
○			0.9404	0.3767	0.2961	0.1884	0.1295	0.1114	0.85	3.38

MATERIAL DESCRIPTION	TEST DATE	USCS	NM
○ LIGHT BROWN SAND	07/27/17	SP	3.9

Project No. 274047 **Client:** TEC, INC.

Project: MANCHESTER LAWRENCE RAIL CORRIDOR

○ **Source of Sample:** TP-7 **Depth:** 4.5 FT **Sample Number:** BULK

Remarks:
○SAMPLE DESCRIPTION BASED ON USDA

TRC Engineers, Inc.

Mt. Laurel, NJ

Figure 9

Tested By: JJA 07/27/17 **Checked By:** PWK 08/07/17

Particle Size Distribution Report

	% Stones	% +3"	% Gravel			% Sand					% Silt		% Clay
			Coarse	Medium	Fine	V. Crs.	Crs.	Med.	Fine	V. Fine	Crs.	Fine	
○	0.0	0.0	0.0	0.0	0.1	0.1	0.3	5.0	22.1	32.5	30.1	9.0	0.8

	LL	PL	D_{85}	D_{60}	D_{50}	D_{30}	D_{15}	D_{10}	C_c	C_u
○			0.1509	0.0743	0.0608	0.0408	0.0265	0.0203	1.10	3.67

MATERIAL DESCRIPTION	TEST DATE	USCS	NM
○ LIGHT BROWN SANDY LOAM	07/27/17		11.1

Project No. 274047 **Client:** TEC, INC.
Project: MANCHESTER LAWRENCE RAIL CORRIDOR

○ **Source of Sample:** TP-8 **Depth:** 4.5 FT **Sample Number:** BULK

Remarks:
○SAMPLE DESCRIPTION BASED ON USDA

TRC Engineers, Inc.

Mt. Laurel, NJ

Figure 10

Tested By: JJA 07/27/17 **Checked By:** PWK 08/07/17

NOAA Atlas 14, Volume 10, Version 3
Location name: Lawrence, Massachusetts, USA*
Latitude: 42.7075°, Longitude: -71.1735°
Elevation: 57.55 ft**
* source: ESRI Maps
** source: USGS

POINT PRECIPITATION FREQUENCY ESTIMATES

Sanja Perica, Sandra Pavlovic, Michael St. Laurent, Carl Trypaluk, Dale Unruh, Orlan Wilhite

NOAA, National Weather Service, Silver Spring, Maryland

PF_tabular | PF_graphical | Maps_&_aerials

PF tabular

PDS-based point precipitation frequency estimates with 90% confidence intervals (in inches)[1]

Duration	Average recurrence interval (years)									
	1	2	5	10	25	50	100	200	500	1000
5-min	0.310 (0.243-0.385)	0.369 (0.289-0.459)	0.466 (0.364-0.582)	0.546 (0.424-0.686)	0.657 (0.493-0.861)	0.740 (0.544-0.991)	0.827 (0.589-1.15)	0.923 (0.624-1.31)	1.06 (0.688-1.56)	1.17 (0.742-1.76)
10-min	0.439 (0.344-0.545)	0.523 (0.410-0.650)	0.660 (0.515-0.824)	0.774 (0.601-0.971)	0.930 (0.698-1.22)	1.05 (0.770-1.40)	1.17 (0.835-1.63)	1.31 (0.883-1.86)	1.50 (0.975-2.21)	1.66 (1.05-2.49)
15-min	0.516 (0.405-0.642)	0.615 (0.482-0.765)	0.777 (0.607-0.970)	0.911 (0.708-1.14)	1.10 (0.822-1.44)	1.23 (0.907-1.65)	1.38 (0.982-1.91)	1.54 (1.04-2.19)	1.77 (1.15-2.60)	1.95 (1.24-2.93)
30-min	0.711 (0.558-0.884)	0.847 (0.664-1.06)	1.07 (0.836-1.34)	1.25 (0.974-1.58)	1.51 (1.13-1.98)	1.70 (1.25-2.28)	1.90 (1.35-2.64)	2.12 (1.43-3.02)	2.44 (1.58-3.59)	2.69 (1.70-4.04)
60-min	0.906 (0.711-1.13)	1.08 (0.846-1.34)	1.36 (1.07-1.70)	1.60 (1.24-2.01)	1.92 (1.44-2.52)	2.17 (1.59-2.90)	2.42 (1.73-3.36)	2.70 (1.83-3.84)	3.10 (2.01-4.57)	3.43 (2.17-5.15)
2-hr	1.16 (0.919-1.44)	1.39 (1.10-1.72)	1.77 (1.40-2.20)	2.09 (1.63-2.61)	2.52 (1.91-3.30)	2.84 (2.11-3.81)	3.19 (2.30-4.45)	3.60 (2.44-5.09)	4.22 (2.75-6.18)	4.75 (3.02-7.09)
3-hr	1.34 (1.06-1.65)	1.61 (1.28-1.99)	2.06 (1.63-2.55)	2.44 (1.91-3.03)	2.95 (2.25-3.85)	3.33 (2.49-4.45)	3.74 (2.72-5.22)	4.24 (2.88-5.98)	5.02 (3.27-7.32)	5.69 (3.62-8.46)
6-hr	1.70 (1.37-2.08)	2.07 (1.65-2.53)	2.66 (2.12-3.27)	3.15 (2.50-3.90)	3.83 (2.94-4.98)	4.33 (3.26-5.77)	4.88 (3.58-6.79)	5.56 (3.79-7.79)	6.62 (4.33-9.61)	7.54 (4.81-11.2)
12-hr	2.13 (1.72-2.59)	2.61 (2.10-3.17)	3.38 (2.72-4.13)	4.03 (3.22-4.95)	4.92 (3.80-6.35)	5.57 (4.22-7.37)	6.28 (4.63-8.68)	7.17 (4.91-9.98)	8.54 (5.61-12.3)	9.74 (6.23-14.3)
24-hr	2.51 (2.04-3.03)	3.11 (2.54-3.77)	4.11 (3.33-4.98)	4.93 (3.97-6.02)	6.07 (4.73-7.80)	6.90 (5.27-9.10)	7.82 (5.81-10.8)	8.97 (6.17-12.4)	10.8 (7.10-15.5)	12.4 (7.94-18.1)
2-day	2.79 (2.30-3.35)	3.54 (2.90-4.25)	4.75 (3.89-5.73)	5.76 (4.68-6.99)	7.15 (5.63-9.17)	8.16 (6.30-10.7)	9.29 (6.99-12.8)	10.8 (7.42-14.8)	13.1 (8.67-18.7)	15.2 (9.81-22.1)
3-day	3.06 (2.53-3.66)	3.86 (3.18-4.62)	5.16 (4.24-6.20)	6.24 (5.09-7.54)	7.73 (6.11-9.88)	8.81 (6.83-11.6)	10.0 (7.57-13.8)	11.6 (8.03-15.9)	14.2 (9.38-20.1)	16.5 (10.6-23.8)
4-day	3.33 (2.76-3.97)	4.15 (3.43-4.95)	5.49 (4.53-6.58)	6.60 (5.41-7.95)	8.14 (6.45-10.4)	9.25 (7.18-12.1)	10.5 (7.95-14.4)	12.1 (8.41-16.6)	14.8 (9.80-20.9)	17.2 (11.1-24.7)
7-day	4.06 (3.39-4.82)	4.91 (4.09-5.83)	6.30 (5.23-7.50)	7.45 (6.14-8.92)	9.03 (7.20-11.4)	10.2 (7.95-13.2)	11.5 (8.71-15.6)	13.2 (9.15-17.9)	15.9 (10.6-22.3)	18.3 (11.8-26.2)
10-day	4.72 (3.96-5.58)	5.59 (4.68-6.62)	7.02 (5.85-8.33)	8.20 (6.79-9.79)	9.82 (7.85-12.3)	11.0 (8.60-14.2)	12.3 (9.34-16.6)	14.0 (9.78-19.0)	16.7 (11.1-23.4)	19.0 (12.3-27.2)
20-day	6.59 (5.57-7.74)	7.55 (6.38-8.88)	9.12 (7.67-10.8)	10.4 (8.70-12.4)	12.2 (9.80-15.1)	13.6 (10.6-17.2)	15.0 (11.3-19.7)	16.6 (11.7-22.3)	19.0 (12.7-26.4)	21.0 (13.6-29.8)
30-day	8.15 (6.93-9.54)	9.19 (7.80-10.8)	10.9 (9.20-12.8)	12.3 (10.3-14.5)	14.2 (11.4-17.5)	15.7 (12.3-19.7)	17.2 (12.9-22.3)	18.8 (13.3-25.1)	21.0 (14.1-29.0)	22.7 (14.8-32.1)
45-day	10.1 (8.66-11.8)	11.3 (9.61-13.1)	13.1 (11.1-15.3)	14.6 (12.3-17.2)	16.7 (13.5-20.4)	18.4 (14.4-22.8)	20.0 (14.9-25.5)	21.5 (15.3-28.6)	23.5 (15.9-32.4)	25.0 (16.3-35.2)
60-day	11.9 (10.2-13.8)	13.0 (11.2-15.2)	15.0 (12.8-17.5)	16.6 (14.0-19.5)	18.8 (15.2-22.8)	20.6 (16.1-25.4)	22.2 (16.6-28.3)	23.8 (16.9-31.5)	25.8 (17.4-35.4)	27.1 (17.7-38.1)

[1] Precipitation frequency (PF) estimates in this table are based on frequency analysis of partial duration series (PDS).

Numbers in parenthesis are PF estimates at lower and upper bounds of the 90% confidence interval. The probability that precipitation frequency estimates (for a given duration and average recurrence interval) will be greater than the upper bound (or less than the lower bound) is 5%. Estimates at upper bounds are not checked against probable maximum precipitation (PMP) estimates and may be higher than currently valid PMP values.

Please refer to NOAA Atlas 14 document for more information.

Back to Top

PF graphical

PDS-based depth-duration-frequency (DDF) curves
Latitude: 42.7075°, Longitude: -71.1735°

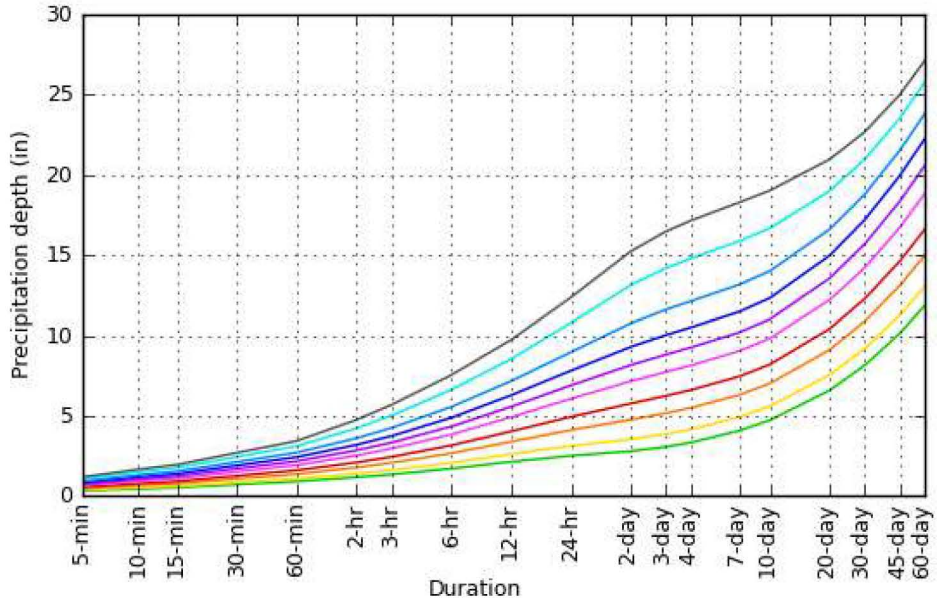

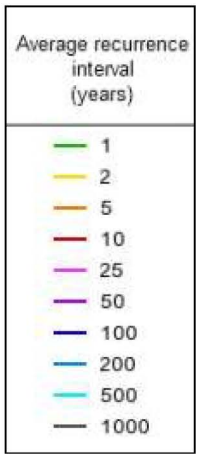

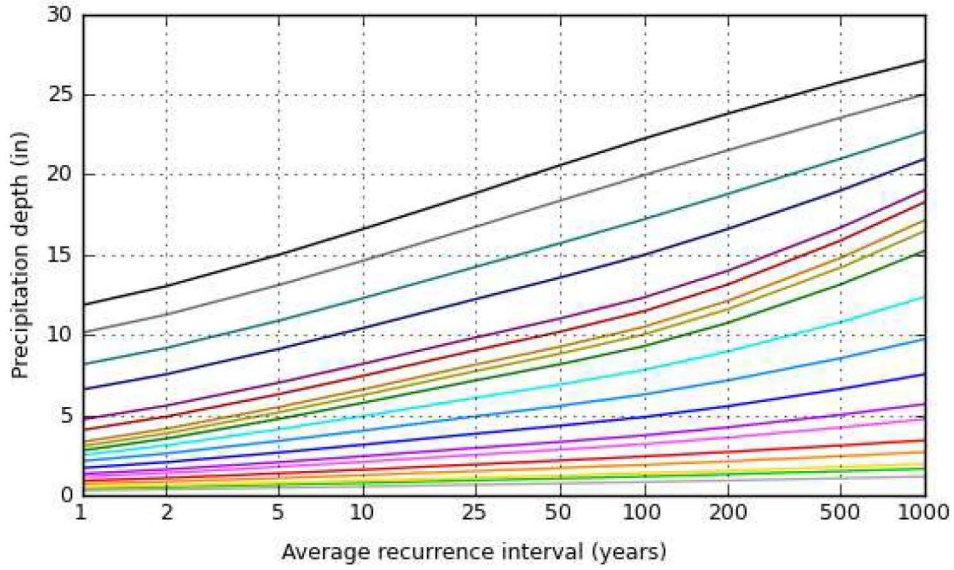

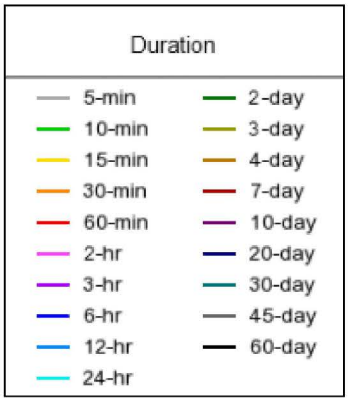

NOAA Atlas 14, Volume 10, Version 3

Created (GMT): Mon Aug 1 16:51:26 2022

Back to Top

Maps & aerials

Small scale terrain

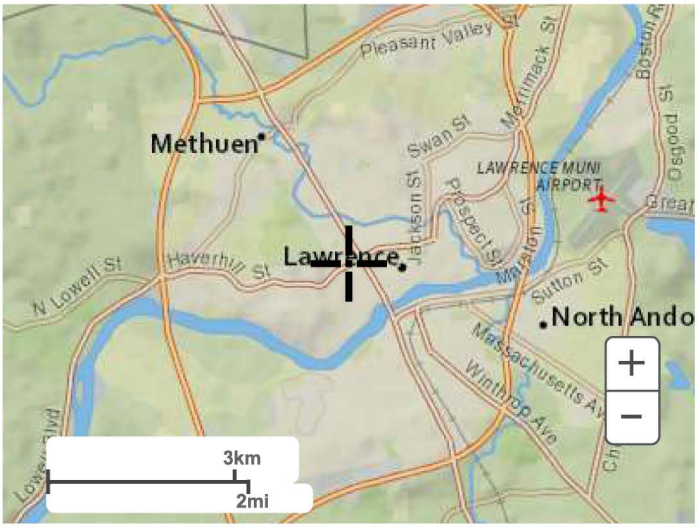

Large scale terrain

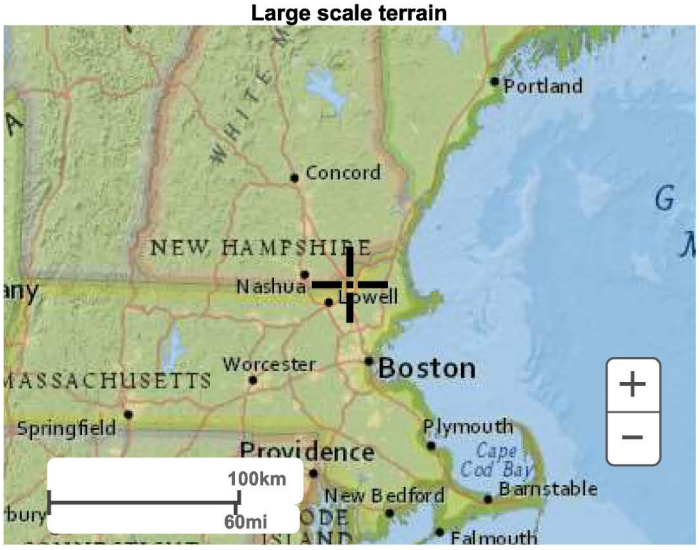

Large scale map

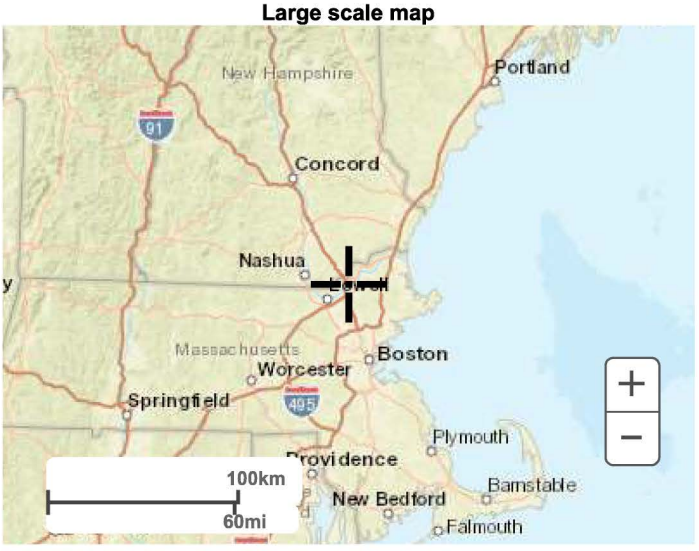

Large scale aerial

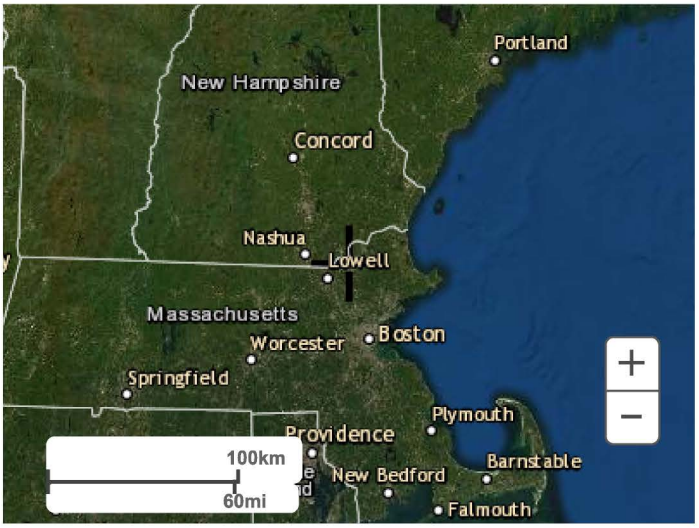

Back to Top

US Department of Commerce
National Oceanic and Atmospheric Administration
National Weather Service
National Water Center
1325 East West Highway
Silver Spring, MD 20910
Questions?: HDSC.Questions@noaa.gov

Disclaimer

D

Operations & Maintenance Plan

STORMWATER MANAGEMENT OPERATIONS AND MAINTENANCE PLAN

LAWRENCE MANCHESTER RAIL CORRIDOR IMPROVEMENTS PROJECT

LAWRENCE, MASSACHUSETTS

Prepared for:

City of Lawrence, MA
200 Common Street
Lawrence, MA 01840

Prepared by:

TEC, Inc.
282 Merrimack Street
2nd Floor
Lawrence MA, 01843

October 19, 2022

Stormwater Management Operation and Maintenance Plan
October 19, 2022

Name of Owner: **City of Lawrence, MA**
Name of Facility: **Lawrence Manchester Rail Corridor (LMRC)**
Location: **Lawrence MA 01840**

A detailed, written log of all scheduled preventative and corrective maintenance performed for the stormwater management measures must be kept on site, including a record of all inspections and copies of maintenance-related work orders.

An "Inspection and Maintenance Check List" shall be maintained as a record of regularly scheduled inspection and maintenance items as outlined below for every year. Maintenance required and actions taken shall be recorded in a "Inspection and Maintenance Log". The funding, operation, and maintenance of all stormwater management Best Management Practices (BMPs) shall be provided by the Owner, or their appointee.

Maintenance routine and schedule: Routine inspections will be conducted monthly and thorough investigations will be conducted twice a year. Task systems include regular removal of accumulated sediments, floatables and debris, and scour inspection. Inspections will occur after every major storm event throughout construction and for the first six (6) months after construction is completed. Inspections will be conducted by a qualified person experienced in drainage design and stormwater management systems. Annual reports will be prepared detailing the status of the stormwater system and the maintenance performed.

The owner agrees with a minimum maintenance schedule as follows:

1. **Monthly Inspection for damaged or clogged outlet control structures, culverts, and area drains.**
   Outlet control structures, culverts, & area drains shall be inspected and cleared of debris to maintain inlet capacity

2. **Infiltration Basins**
   As a minimum, the basin will be inspected after every major storm event greater than 0.5", for the first six months after construction, to ensure functionality and inspect for erosion. Thereafter, inspections will occur twice per year and after every major storm event greater than the 2- year storm event (3.11").

At least twice during growing seasons, the infiltration basin side slopes, embankments, outlet structures, and emergency spillways will be cleared of accumulated sediment, grass clippings, leaves, and trash and then mowed. Sediment collected inside the basin will be removed at a minimum of once every ten (10) years by hand or mechanical equipment. Eroded areas and slopes will be loamed, seeded, and mulched or stabilized with rock rip-rap. Collected debris will be properly disposed of, in accordance with state and federal requirements, at a local facility.

3. **Bioretention Areas/Rain Gardens**
   As a minimum, the basin will be inspected monthly to ensure functionality, inspect for erosion, and to remove litter and debris. At least twice during growing seasons, the rain garden side slopes, embankments, and outlet structures will be cleared of accumulated sediment and mowed. All flared end sections and rock rip-rap will be cleaned of all sediment and debris and reset if necessary, to ensure that stormwater flows coming into the basin(s) are not being impeded. Outlet control structures should have debris removed to maintain consistent release velocities. Dead vegetation should be removed and replaced in the fall of spring each year. Invasive species should be removed as needed to prevent these species from spreading into the bioretention area. Replace mulch every two years, in the early spring, and replace entire media and all vegetation as needed in the late spring or early summer.

4. **Inspection and cleaning of drainage pipes and manholes.**
   Drainage pipes and manhole structures shall be inspected and cleaned of sediment at least every five (5) years or as required to maintain adequate functionality of the stormwater conveyance system. All sediments shall be properly handled and disposed of in accordance with local, state and federal guidelines and regulations.

5. **Sediment Forebays**
   The Sediment Forebays shall be inspected monthly basis, and accumulated sediment shall be removed quarterly, or when filled with at least halfway the height of the forebay. All sediments shall be properly handled and disposed of in accordance with local, state and federal guidelines and regulations.

6. **Grass Landscaping**
   The grass landscaping and plantings will be inspected after every major storm event for the two (2) months after seeding to ensure functionality. Thereafter, inspections should take place every six (6) months in the spring and fall and after severe storm events. Grass and mulched landscaping showing signs of wear and erosion will be reloamed/re-seeded or re-mulched as necessary to prevent further erosion from taking place.

7. **Vegetated Filter Strips**
   The grass landscaping and peastone diaphragm will be inspected every six (6) months during the first year. Thereafter, inspections should take place once a year and after severe storm events. The peastone diaphragm should be inspected for sediment buildup and the vegetation inspected for signs of erosion, base sport, and overall health. Sediment should be removed from the toe of the slope. Grass landscaping should be regularly mowed and reseeded if showing signs of wear and erosion.

8. **Grass Drainage Swales**
   Inspect channels monthly for first 6 months after construction and twice annually thereafter. Inspect to make sure vegetation is adequate and for signs of rilling and gullying. Repair any rills or gullies. Replace dead vegetation. Mow swales as necessary to maintain a grass height less than 6 inches. Remove sediment and debris manually, by hand shovel, once per year. Reseed swales as necessary to maintain grass cover.

9. **Snow removal.** Snow will be stored within the landscape areas onsite. During large storm events, snow will be trucked off site.

The Long-Term Pollution Prevention Plan

The Owner agrees to comply with the following Long-Term Pollution Prevention Plan to ensure long-term stormwater quality discharge from the site:

- *Good housekeeping practices:* The project is a public bike path that will be maintained by the City, including snow removal, de-icing, street sweeping and BMP inspection/maintenance.

- *Provisions for storing materials and waste products inside or under cover*: Waste products are not anticipated to be produced or stored on this site.

- *Vehicle washing controls:* Not Applicable

- *Spill prevention and response plans:* There are no proposed uses at the site that would provide an opportunity for a spill of oil or hazardous materials. The bike and pedestrian path are not to be used by motorized vehicles other than for maintenance or emergency purposes. If a vehicle release is the result of an accident, the police and fire department will respond and address any release.

- *Provisions for maintenance of lawns, gardens, and other landscaped areas:* The Owner will provide long-term maintenance for the landscaped areas and stormwater BMPs. Mowing should be provided twice per year, or as needed to maintain the desired height.

- *Requirements for storage and use of fertilizers, herbicides, and pesticides*: At this time there would be no foreseeable need for fertilizers, herbicides, and pesticides.

- *Provisions for operation and management of septic systems*: Not Applicable

- *Provisions for solid waste management*: Not Applicable.

- *Snow disposal and plowing plans relative to Wetland Resource Areas*: No snow will be stored or disposed of in surrounding resource areas.

- *Street sweeping*: Not Applicable.

- *Provisions for prevention of illicit discharges to the stormwater management system*: Only stormwater is proposed to be conveyed through the stormwater management system. No illicit materials will be permitted. The owners will be responsible to maintain this system.

- *Documentation that Stormwater BMPs are designed to provide for shutdown and containment in the event of a spill or discharges to or near critical areas or from LUHPPL*. The project location is not considered a LUHPPL, however in the event of a maintenance vehicular spill, the fire department and police department of Lawrence will be responsible for cleanup and contamination removal.

- *Training for staff or personnel involved with implementing Long-Term Pollution Prevention Plan*: Prior to implementation of the LTPPP, the owners shall provide an on-site meeting with the maintenance personnel to present the contents and requirements of the Stormwater Operation and Maintenance Plan and the LTPPP.

- *List of Emergency contacts for implementing Long-Term Pollution Prevention Plan*:

  City of Lawrence
  (978) 620-3000
  200 Common Street
  Lawrence, MA 01840

Name of Applicant: City of Lawrence, MA
Name of Facility: Lawrence Manchester Rail Corridor
Location: Lawrence, MA

INSPECTION AND MAINTENANCE CHECK LIST -
LMRC, Lawrence MA

For Year: _____

	Inspection Item	Inspection Frequency*											
		Jan	Feb	Mar	Apr	May	Jun	Jul	Aug	Sept	Oct	Nov	Dec
1	Area Drains; Culvert Inlets/Outlets												
2	Outlet Control Structures												
3	Drainage Pipes and Manholes	At least every five years or as needed.											
4	Infiltration Basins												
5	Bioretention Areas/Rain Gardens												
6	Sediment Forebays												
7	Vegetated Filter Strips												
8	Grass Drainage Swales												
9	Grass Landscaping												
	Maintenance Item	Maintenance Frequency*											
		Jan	Feb	Mar	Apr	May	Jun	Jul	Aug	Sep	Oct	Nov	Dec
1	Area Drains; Culvert Inlets/Outlets												
2	Outlet Control Structures												
3	Drainage Pipes and Manholes	At least every five years or as needed.											
4	Infiltration Basins												
5	Bioretention Areas/Rain Gardens												
6	Sediment Forebays												
7	Vegetated Filter Strips												
8	Grass Drainage Swales												
9	Grass Landscaping												

* Actual time of inspecting and maintaining items may vary. Chart shall be used to indicate frequency of events

** This chart shall be used in conjunction with the attached "Stormwater Management Operations and Maintenance Plan", dated October 19, 2022

Name of Applicant: City of Lawrence, MA
Name of Facility: Lawrence Manchester Rail Corridor
Location: Lawrence, MA

Inspection and Maintenance Log

Inspection No.	Date	Inspections Performed	Maintenance Actions Taken
1			
2			
3			
4			
5			
6			
7			
8			
9			
10			
11			
12			
13			
14			
15			
16			
17			
18			
19			
20			
21			

Additional Sheets shall be added as needed

Name of Applicant: City of Lawrence, MA
Name of Facility: Lawrence Manchester Rail Corridor
Location: Lawrence, MA

INSPECTION AND MAINTENANCE ESTIMATED BUDGET (YEARLY) - LMRC, Lawrence MA

	Inspection Item	Quantity	Estimated Budget	Inspections Per Year	Total
1	Area Drains; Culvert Inlets/Outlets	5	$5.00	12	$300.00
2	Outlet Control Structures	2	$10.00	12	$240.00
3	Drainage Pipes and Manholes	1	$500.00	0.2	$100.00
4	Infiltration Basins	1	$10.00	2	$20.00
5	Bioretention Areas/Rain Gardens	7	$10.00	12	$840.00
6	Sediment Forebays	2	$10.00	12	$240.00
7	Vegetated Filter Strips	12	$10.00	1	$120.00
8	Grass Drainage Swales	4	$10.00	2	$80.00
9	Grass Landscaping	1	$10.00	2	$20.00
	Maintenance Item	Quantity	Estimated Budget	Times Per Year	Total
1	Area Drains; Culvert Inlets/Outlets	5	$50.00	2	$500.00
2	Outlet Control Structures	2	$75.00	2	$300.00
3	Drainage Pipes and Manholes	1	$2,000.00	0.2	$400.00
4	Infiltration Basins	1	$200.00	2	$400.00
5	Bioretention Areas/Rain Gardens	7	$200.00	2	$2,800.00
6	Sediment Forebays	2	$75.00	4	$600.00
7	Vegetated Filter Strips	12	$50.00	1	$600.00
8	Grass Drainage Swales	4	$50.00	1	$200.00
9	Grass Landscaping	1	$2,000	2	$4,000.00

Annual Total
$11,760.00

E

Illicit Discharge Statement

Illicit Discharge Compliance Statement

Name of Owner: **City of Lawrence**

Name of Facility: **Lawrence Manchester Rail Corridor**
Location: **Lawrence, MA**

The Site Plans and Stormwater Report for the Proposed Lawrence Manchester Rail Corridor Improvements Project located along the above-mentioned sections of Lawrence, MA, meet the requirements of Standard 10 of the Massachusetts Stormwater Handbook.

The Site Plans were prepared by qualified personnel at the direction of the City of Lawrence. The Site Plans identify the location of stormwater management and utility systems. As designed, the systems do not allow for any connections between the stormwater management and sanitary sewer utilities.

Signature: _____
(To be signed prior to occupancy)

F

Construction Period Pollution Prevention Plan

CONSTRUCTION PERIOD POLLUTION PREVENTION AND EROSION AND SEDIMENTATION CONTROL PLAN

LAWRENCE MANCHESTER RAIL CORRIDOR (LMRC) RAIL TRAIL

LAWRENCE, MASSACHUSETTS

Prepared for:

City of Lawrence
200 Common Street
Lawrence, MA 01840

Prepared by:

TEC, Inc.
282 Merrimack Street
2nd Floor
Lawrence MA, 01843

October 19, 2022

CONSTRUCTION PERIOD POLLUTION PREVENTION AND EROSION AND SEDIMENTATION CONTROL PLAN
October 19, 2022

Name of Owner: **City of Lawrence**
Name of Facility: **Lawrence Manchester Rail Corridor**
Location: **Lawrence MA**

This plan presents the minimum measures for the contractor to utilize in preparation of the Stormwater Pollution Prevention Plan (SWPPP) as required by the EPA National Pollutant Discharge Elimination System (NPDES) Construction General Permit. Contractor to provide SWPPP to the Conservation Department at least fourteen (14) days prior to start of construction.

Good Housekeeping BMPs

Goals
Minimize the potential for contaminants to enter or runoff the site during construction activities. Fuel and other equipment related fluids will be properly stored. The Contractor shall establish secure storage areas that collect any spillage to meet requirements of the City of Lawrence Fire Department regarding the storage of flammable materials. The Contractor shall complete and submit the plans to the Engineer.

General Requirements
The following presents a proactive approach to all the best management practices, erosion and sedimentation controls, mitigation measures, and monitoring activities for this Project.

Compost Filter Sock
A compost filter sock is a type of contained compost filter berm. It is a mesh tube filled with composted material that is placed perpendicular to sheet-flow runoff to control erosion and retain sediment in disturbed areas. The filter sock can be used in place of a traditional sediment and erosion control tool such as a silt fence or straw bale barrier.

Compost filter socks are flexible and can be placed along the perimeter of a site, or at intervals along a slope, to capture and treat stormwater that runs off as sheet flow. Filter socks can also be used on pavement as inlet protection for storm drains and to slow water flow in small ditches. Filter socks used for erosion control are usually 12 inches in diameter, although 8 inch, 18 inch, and 24 inch– diameter socks are used in some applications. The smaller, 8 inch–diameter filter socks are commonly used for stormwater inlet protection. The outer shell of a compost filter sock is typically biodegradable and can remain on pervious surfaces post construction versus having to be removed as construction waste.

Pavement Sweeping
Paved areas within the active construction site can be swept on a regular basis to remove larger sediment particles from construction activities. Pavement areas adjacent to the Site will be swept if dirt and debris is tracked from the construction site.

General Maintenance
Refer to the Inspection and Maintenance Checklist (at the end of this section) identifying inspection and maintenance measures for each specific practice.

The contractor or subcontractor will be responsible for implementing each control shown on the Plan. In accordance with EPA regulations, the contractor must sign a copy of a certification to verify that a plan has been prepared and that permit regulations are understood.

The onsite contractor will inspect all sediment and erosion control structures weekly and after each rainfall event meeting the minimum requirements as defined in the Plan. Records of the inspections will be prepared and maintained onsite by the contractor as required by the Plan.

- Silt shall be removed from behind barriers if greater than 6-inches deep, 2/3rds the height of the erosion control barrier, or as needed.
- Damaged or deteriorated items will be repaired immediately after identification.
- The underside of the compost filter sock should be kept in close contact with the earth and reset as necessary.
- Contractor to use rip-rap stone when necessary to manage stormwater during construction.
- Soil stockpiles in grass areas shall be enclosed by a silt fence and soil stockpiles in paved areas shall be enclosed by compost filter sock or straw bales. All soil stockpiles are to be covered with tarps.
- At a minimum establish good housekeeping BMPs for:
    - Material handling and waste management
    - Staging areas
    - Designate washout areas
    - Equipment vehicle fueling and maintenance
    - Spill prevention and control

Erosion control structures shall remain in place until all disturbed earth has been securely stabilized. After removal of structures, disturbed areas shall be regraded and stabilized as necessary.

Spill Prevention and Control

The Contractor will actively maintain and manage the site activities with the procedures outlined in this Plan. In the event of petroleum or other deleterious substance spill, action will be taken by the Contractor to contain and remove the spill. The Contractor will comply with the relevant section(s) of the Oil Pollution Prevention Act, 40 CFR 112.7.

Responsibility

All project personnel share the responsibility for the initial control and reporting of the oil and other substance spill, especially the personnel that first discover the spill. The Site Safety and Health Officer (SSHO) will be responsible for determining the necessary safety equipment and for establishing safety practices to be followed by the Contractor during the clean-up operations. All personnel will be trained in the use of and location of this equipment, prior to the commencement of the construction.

The Contractor's goal is to provide effective, efficient, and coordinated action to minimize or mitigate damages to the environment and public health and welfare from oil or other substance discharges, conforming to applicable federal, state, and local regulations, as well as other provisions and restrictions. In the event of spills or releases that may occur during the Project, a representative on-site qualified by OSHA training requirements (29 CFR 1910.120) for a Level 3 Hazmat Technician will be provided and will have the responsibility and authority for supervising the cleanup. If the representative determines that the clean-up operations are beyond the capacity of the Contractor, assistance shall be requested from its Subcontractor.

In the event of an emergency spill, the Contractor will be responsible for retaining the environmental Subcontractor. The selected environmental subcontractor will develop a Hazardous Materials Health and Safety Plan, which will be referenced when a spill or release is discovered, and the control of the spill or release is beyond the scope of the Spill Prevention Control and Countermeasure plan. The Contractor's Project Manager is responsible for giving the SSHO directions for initiating the Hazardous Materials Health and Safety Plan.

Alert and reporting procedures will become effective immediately upon observance and indication of a spill or discharge of oil or other substances on the project.

Reportable observations are:

1. Leaks or spills
2. Soils which are discolored or have an odor
3. Discharge of oil or other similar substances from drainpipes

The Engineer will be informed immediately of all substantial spills, releases, or other substance discharges. All telephone numbers for the Emergency Response agencies will be posted on site. The Contractor or its Subcontractors will implement control and countermeasures immediately.

Fuel and Oil Delivery Trucks

The equipment superintendent or designee will monitor all truck unloading procedures to verify all hoses are tight and do not leak, and if necessary, will tighten, adjust, or replace them to prevent a release of any kind. In the event of a major spill, alert and initial report procedures will be implemented, and an emergency response contractor will be called in to perform the cleanup.

Equipment

Motorized equipment that requires fuel and oil to operate will be inspected prior to the start of each work shift by the operator (in the field) to ensure there is no leakage of oil, fuel, or other material. Trucks will be inspected prior to use for potential leaks or drips. If a leak is found, repairs will be made immediately, and spillage will be cleaned up manually using sorbent material. Vehicles that are found to be leaking will be immediately taken out of service until repairs can be made.

Drum Storage

Drum storage, if any, will be located in a secure area within the Project limits away from environmental areas of concern. Petroleum liquids and other substances stored in drums will be kept in a drum container that consists of a drum rack and drip containment pan that is capable of containing 110% of the stored volume should the drum rupture.

Lubrication / Oil Maintenance

Replacement lubrication will be directly deposited from the lubrication truck to the equipment lubrication reservoir. No other container system will be used to transport oil to the equipment. Mobile equipment will be serviced off site or in the lay-down area. Equipment that cannot be moved will be serviced in the field. The Contractor will place a containment pan or absorbent below the service area prior to initiating service activities in the field. Waste disposal will be completed by the Contractor or by a waste disposal firm. Miscellaneous lubricants for operating equipment will be limited to daily quantities.

Spent Oil

Oil that has already been used on the job will be disposed of via a certified waste disposal firm. Spent oil will be stored in a labeled (hazardous waste signs) and vented fuel storage cell located at the staging area awaiting disposal by a certified waste disposal firm (i.e. Enpro, Inc.). The staging area will be located within the boundary of the project and inspected daily for leaks or spills. The storage cell will be bermed to contain 110% of the largest container or 10% of the total volume in storage, whichever is greater.

Special Oil Spill Equipment

Sorbent Pads

Sorbent pads will be available to absorb oil and petroleum compounds. If necessary, the pads will be used to absorb oil spills or leaks by placing them on the oil and giving them antiquated time to absorb it. The sorbent pads will be stored in equipment box located in the maintenance area. The pads shall float and be water repellent, so they can absorb oil on water. Saturated/contaminated pads will be placed in an appropriate container and stored within the maintenance area. A certified waste disposal firm will dispose of the approved containers.

Sorbent Compound

The compound will be used for contaminants spilled on decks or hard surfaces. In most cases, it can be applied directly to spills, but if the spill is large, it can be used to form a dike around the spill to prevent further migration.

Best Management Practices – Maintenance/Evaluation Checklist
Construction Practices

Best Management Practice	Inspection Frequency	Date Inspected	Inspector	Minimum Maintenance and Key Items to Check	Cleaning/Repair Needed ☐yes ☐no (List Items)	Date of Cleaning/Repair	Performed by
Compost Filter Sock	Inspect at least once per week and after each rainstorm of 0.25 inch or greater.			• Ensure that compost filter sock is intact and the area behind the sock is not filled with sediment. If there is excessive ponding behind the filter sock or accumulated sediments reach the top of the sock, an additional sock should be added on top or in front of the existing filter sock in these areas, without disturbing the soil or accumulated sediment. • If the filter sock was overtopped during a storm event, the operator should consider installing an additional filter sock on top of the original, placing an additional filter sock further up the slope.			
Pavement Sweeping	To be monitored as needed.			• Paved areas within the active construction site can be swept on a regular basis to remove larger sediment particles from construction activities. Pavement areas adjacent to the Site will be swept if dirt and debris is tracked from the construction site.			

Stormwater Supervisor Contact Information:

_____

_____

_____

_____

A00860 - 505

Proposal No. 608930-128034

THIS PAGE IS INTENTIONALLY LEFT BLANK

DOCUMENT A00861

MASSACHUSETTS

DEPARTMENT OF ENVIRONMENTAL PROTECTION

ORDER OF CONDITIONS

THIS PAGE INTENTIONALLY LEEFT BLANK

Massachusetts Department of Environmental Protection
Bureau of Resource Protection - Wetlands

WPA Form 5 – Order of Conditions

Massachusetts Wetlands Protection Act M.G.L. c. 131, §40

Provided by MassDEP:
195-0217
MassDEP File #

eDEP Transaction #

Lawrence
City/Town

A. General Information

Please note: this form has been modified with added space to accommodate the Registry of Deeds Requirements

Important: When filling out forms on the computer, use only the tab key to move your cursor - do not use the return key.

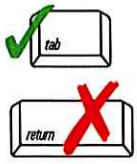

1. From: Lawrence
Conservation Commission

2. This issuance is for (check one): a. ☒ Order of Conditions b. ☐ Amended Order of Conditions

3. To: Applicant:

Daniel — a. First Name
McCarthy — b. Last Name
City of Lawrence — c. Organization
200 Common Street — d. Mailing Address
Lawrence — e. City/Town
MA — f. State
01840 — g. Zip Code

4. Property Owner (if different from applicant):

a. First Name
b. Last Name
Massachusetts Bay Transportation Authority — c. Organization
10 Park Plaza — d. Mailing Address
Boston — e. City/Town
MA — f. State
02116 — g. Zip Code

5. Project Location:

Former Manchester-Lawrence Rail ROW From Merrimack River to Methuen Town
Lawrence — b. City/Town
144, 167, 212, 122 — c. Assessors Map/Plat Number
29, 4, 2, 65, 2, 24, 19 — d. Parcel/Lot Number
Latitude and Longitude, if known: 42 d 42 m 22 s — d. Latitude
-71 d 10m 17 s — e. Longitude

Massachusetts Department of Environmental Protection
Bureau of Resource Protection - Wetlands
WPA Form 5 – Order of Conditions
Massachusetts Wetlands Protection Act M.G.L. c. 131, §40

Provided by MassDEP:
195-0217
MassDEP File #

eDEP Transaction #

Lawrence
City/Town

A. General Information (cont.)

6. Property recorded at the Registry of Deeds for (attach additional information if more than one parcel):

Essex - N/A -ROW_MBTA
a. County

b. Certificate Number (if registered land)

c. Book

d. Page

7. Dates: 08/28/23 a. Date Notice of Intent Filed; 09/28/23 b. Date Public Hearing Closed; 10/30/23 c. Date of Issuance

8. Final Approved Plans and Other Documents (attach additional plan or document references as needed):

Lawrence Manchester Rail Corridor(LMRC) Rail Trail
a. Plan Title

The Engineering Corp. (TEC)
b. Prepared By

Lauren Nicholson P.E.
c. Signed and Stamped by

08/16/23
d. Final Revision Date

Varies
e. Scale

Lowell Street Bridge No.L-04-027
f. Additional Plan or Document Title

08/23/23
g. Date

B. Findings

1. Findings pursuant to the Massachusetts Wetlands Protection Act:

Following the review of the above-referenced Notice of Intent and based on the information provided in this application and presented at the public hearing, this Commission finds that the areas in which work is proposed is significant to the following interests of the Wetlands Protection Act (the Act). Check all that apply:

a. ☒ Public Water Supply b. ☐ Land Containing Shellfish c. ☒ Prevention of Pollution
d. ☐ Private Water Supply e. ☒ Fisheries f. ☒ Protection of Wildlife Habitat
g. ☐ Groundwater Supply h. ☒ Storm Damage Prevention i. ☒ Flood Control

2. This Commission hereby finds the project, as proposed, is: (check one of the following boxes)

Approved subject to:

a. ☒ the following conditions which are necessary in accordance with the performance standards set forth in the wetlands regulations. This Commission orders that all work shall be performed in accordance with the Notice of Intent referenced above, the following General Conditions, and any other special conditions attached to this Order. To the extent that the following conditions modify or differ from the plans, specifications, or other proposals submitted with the Notice of Intent, these conditions shall control.

Massachusetts Department of Environmental Protection
Bureau of Resource Protection - Wetlands
WPA Form 5 – Order of Conditions
Massachusetts Wetlands Protection Act M.G.L. c. 131, §40

Provided by MassDEP:
195-0217
MassDEP File #

eDEP Transaction #

Lawrence
City/Town

B. Findings (cont.)

Denied because:

b. ☐ the proposed work cannot be conditioned to meet the performance standards set forth in the wetland regulations. Therefore, work on this project may not go forward unless and until a new Notice of Intent is submitted which provides measures which are adequate to protect the interests of the Act, and a final Order of Conditions is issued. **A description of the performance standards which the proposed work cannot meet is attached to this Order.**

c. ☐ the information submitted by the applicant is not sufficient to describe the site, the work, or the effect of the work on the interests identified in the Wetlands Protection Act. Therefore, work on this project may not go forward unless and until a revised Notice of Intent is submitted which provides sufficient information and includes measures which are adequate to protect the Act's interests, and a final Order of Conditions is issued. **A description of the specific information which is lacking and why it is necessary is attached to this Order as per 310 CMR 10.05(6)(c).**

3. ☐ Buffer Zone Impacts: Shortest distance between limit of project disturbance and the wetland resource area specified in 310 CMR 10.02(1)(a) — a. linear feet

Inland Resource Area Impacts: Check all that apply below. (For Approvals Only)

Resource Area	Proposed Alteration	Permitted Alteration	Proposed Replacement	Permitted Replacement
4. ☐ Bank	a. linear feet	b. linear feet	c. linear feet	d. linear feet
5. ☐ Bordering Vegetated Wetland	a. square feet	b. square feet	c. square feet	d. square feet
6. ☐ Land Under Waterbodies and Waterways	a. square feet	b. square feet	c. square feet	d. square feet
	e. c/y dredged	f. c/y dredged		
7. ☐ Bordering Land Subject to Flooding	a. square feet	b. square feet	c. square feet	d. square feet
Cubic Feet Flood Storage	e. cubic feet	f. cubic feet	g. cubic feet	h. cubic feet
8. ☐ Isolated Land Subject to Flooding	a. square feet	b. square feet		
Cubic Feet Flood Storage	c. cubic feet	d. cubic feet	e. cubic feet	f. cubic feet
9. ☒ Riverfront Area	3,391 a. total sq. feet	3,391 b. total sq. feet		
Sq ft within 100 ft	1,667 c. square feet	1,667 d. square feet	e. square feet	f. square feet
Sq ft between 100-200 ft	0 g. square feet	h. square feet	i. square feet	j. square feet

Massachusetts Department of Environmental Protection
Bureau of Resource Protection - Wetlands
WPA Form 5 – Order of Conditions
Massachusetts Wetlands Protection Act M.G.L. c. 131, §40

Provided by MassDEP:
195-0217
MassDEP File #

eDEP Transaction #

Lawrence
City/Town

B. Findings (cont.)

Coastal Resource Area Impacts: Check all that apply below. (For Approvals Only)

	Proposed Alteration	Permitted Alteration	Proposed Replacement	Permitted Replacement
10. ☐ Designated Port Areas	Indicate size under Land Under the Ocean, below			
11. ☐ Land Under the Ocean	a. square feet	b. square feet		
	c. c/y dredged	d. c/y dredged		
12. ☐ Barrier Beaches	Indicate size under Coastal Beaches and/or Coastal Dunes below			
13. ☐ Coastal Beaches	a. square feet	b. square feet	c. nourishment (cu yd)	d. nourishment (cu yd)
14. ☐ Coastal Dunes	a. square feet	b. square feet	c. nourishment (cu yd)	d. nourishment (cu yd)
15. ☐ Coastal Banks	a. linear feet	b. linear feet		
16. ☐ Rocky Intertidal Shores	a. square feet	b. square feet		
17. ☐ Salt Marshes	a. square feet	b. square feet	c. square feet	d. square feet
18. ☐ Land Under Salt Ponds	a. square feet	b. square feet		
	c. c/y dredged	d. c/y dredged		
19. ☐ Land Containing Shellfish	a. square feet	b. square feet	c. square feet	d. square feet
20. ☐ Fish Runs	Indicate size under Coastal Banks, Inland Bank, Land Under the Ocean, and/or inland Land Under Waterbodies and Waterways, above			
	a. c/y dredged	b. c/y dredged		
21. ☐ Land Subject to Coastal Storm Flowage	a. square feet	b. square feet		
22. ☒ Riverfront Area	3,391 a. total sq. feet	b. total sq. feet		
Sq ft within 100 ft	1,667 c. square feet	d. square feet	e. square feet	f. square feet
Sq ft between 100-200 ft	g. square feet	h. square feet	i. square feet	j. square feet

Massachusetts Department of Environmental Protection
Bureau of Resource Protection - Wetlands
WPA Form 5 – Order of Conditions
Massachusetts Wetlands Protection Act M.G.L. c. 131, §40

Provided by MassDEP:
195-0217
MassDEP File #

eDEP Transaction #

Lawrence
City/Town

B. Findings (cont.)

* **#23**. If the project is for the purpose of restoring or enhancing a wetland resource area in addition to the square footage that has been entered in Section B.5.c (BVW) or B.17.c (Salt Marsh) above, please enter the additional amount here.

23. ☐ Restoration/Enhancement *:

a. square feet of BVW

b. square feet of salt marsh

24. ☐ Stream Crossing(s):

a. number of new stream crossings

b. number of replacement stream crossings

C. General Conditions Under Massachusetts Wetlands Protection Act

The following conditions are only applicable to Approved projects.

1. Failure to comply with all conditions stated herein, and with all related statutes and other regulatory measures, shall be deemed cause to revoke or modify this Order.
2. The Order does not grant any property rights or any exclusive privileges; it does not authorize any injury to private property or invasion of private rights.
3. This Order does not relieve the permittee or any other person of the necessity of complying with all other applicable federal, state, or local statutes, ordinances, bylaws, or regulations.
4. The work authorized hereunder shall be completed within three years from the date of this Order unless either of the following apply:
   a. The work is a maintenance dredging project as provided for in the Act; or
   b. The time for completion has been extended to a specified date more than three years, but less than five years, from the date of issuance. If this Order is intended to be valid for more than three years, the extension date and the special circumstances warranting the extended time period are set forth as a special condition in this Order.
   c. If the work is for a Test Project, this Order of Conditions shall be valid for no more than one year.
5. This Order may be extended by the issuing authority for one or more periods of up to three years each upon application to the issuing authority at least 30 days prior to the expiration date of the Order. An Order of Conditions for a Test Project may be extended for one additional year only upon written application by the applicant, subject to the provisions of 310 CMR 10.05(11)(f).
6. If this Order constitutes an Amended Order of Conditions, this Amended Order of Conditions does not extend the issuance date of the original Final Order of Conditions and the Order will expire on N/A unless extended in writing by the Department.
7. Any fill used in connection with this project shall be clean fill. Any fill shall contain no trash, refuse, rubbish, or debris, including but not limited to lumber, bricks, plaster, wire, lath, paper, cardboard, pipe, tires, ashes, refrigerators, motor vehicles, or parts of any of the foregoing.

Massachusetts Department of Environmental Protection
Bureau of Resource Protection - Wetlands
WPA Form 5 – Order of Conditions
Massachusetts Wetlands Protection Act M.G.L. c. 131, §40

Provided by MassDEP:
195-0217
MassDEP File #

eDEP Transaction #

Lawrence
City/Town

C. General Conditions Under Massachusetts Wetlands Protection Act

8. This Order is not final until all administrative appeal periods from this Order have elapsed, or if such an appeal has been taken, until all proceedings before the Department have been completed.

9. No work shall be undertaken until the Order has become final and then has been recorded in the Registry of Deeds or the Land Court for the district in which the land is located, within the chain of title of the affected property. In the case of recorded land, the Final Order shall also be noted in the Registry's Grantor Index under the name of the owner of the land upon which the proposed work is to be done. In the case of the registered land, the Final Order shall also be noted on the Land Court Certificate of Title of the owner of the land upon which the proposed work is done. The recording information shall be submitted to the Conservation Commission on the form at the end of this Order, which form must be stamped by the Registry of Deeds, prior to the commencement of work.

10. A sign shall be displayed at the site not less then two square feet or more than three square feet in size bearing the words,

"Massachusetts Department of Environmental Protection" [or, "MassDEP"]

"File Number 195-0217 "

11. Where the Department of Environmental Protection is requested to issue a Superseding Order, the Conservation Commission shall be a party to all agency proceedings and hearings before MassDEP.

12. Upon completion of the work described herein, the applicant shall submit a Request for Certificate of Compliance (WPA Form 8A) to the Conservation Commission.

13. The work shall conform to the plans and special conditions referenced in this order.

14. Any change to the plans identified in Condition #13 above shall require the applicant to inquire of the Conservation Commission in writing whether the change is significant enough to require the filing of a new Notice of Intent.

15. The Agent or members of the Conservation Commission and the Department of Environmental Protection shall have the right to enter and inspect the area subject to this Order at reasonable hours to evaluate compliance with the conditions stated in this Order, and may require the submittal of any data deemed necessary by the Conservation Commission or Department for that evaluation.

16. This Order of Conditions shall apply to any successor in interest or successor in control of the property subject to this Order and to any contractor or other person performing work conditioned by this Order.

Massachusetts Department of Environmental Protection
Bureau of Resource Protection - Wetlands
WPA Form 5 – Order of Conditions
Massachusetts Wetlands Protection Act M.G.L. c. 131, §40

Provided by MassDEP:
195-0217
MassDEP File #

eDEP Transaction #
Lawrence
City/Town

C. General Conditions Under Massachusetts Wetlands Protection Act (cont.)

17. Prior to the start of work, and if the project involves work adjacent to a Bordering Vegetated Wetland, the boundary of the wetland in the vicinity of the proposed work area shall be marked by wooden stakes or flagging. Once in place, the wetland boundary markers shall be maintained until a Certificate of Compliance has been issued by the Conservation Commission.

18. All sedimentation barriers shall be maintained in good repair until all disturbed areas have been fully stabilized with vegetation or other means. At no time shall sediments be deposited in a wetland or water body. During construction, the applicant or his/her designee shall inspect the erosion controls on a daily basis and shall remove accumulated sediments as needed. The applicant shall immediately control any erosion problems that occur at the site and shall also immediately notify the Conservation Commission, which reserves the right to require additional erosion and/or damage prevention controls it may deem necessary. Sedimentation barriers shall serve as the limit of work unless another limit of work line has been approved by this Order.

19. The work associated with this Order (the "Project")
    (1) ☒ is subject to the Massachusetts Stormwater Standards
    (2) ☐ is NOT subject to the Massachusetts Stormwater Standards

    If the work is subject to the Stormwater Standards, then the project is subject to the following conditions:

    a) All work, including site preparation, land disturbance, construction and redevelopment, shall be implemented in accordance with the construction period pollution prevention and erosion and sedimentation control plan and, if applicable, the Stormwater Pollution Prevention Plan required by the National Pollution Discharge Elimination System Construction General Permit as required by Stormwater Condition 8. Construction period erosion, sedimentation and pollution control measures and best management practices (BMPs) shall remain in place until the site is fully stabilized.

    b) No stormwater runoff may be discharged to the post-construction stormwater BMPs unless and until a Registered Professional Engineer provides a Certification that:
    i. all construction period BMPs have been removed or will be removed by a date certain specified in the Certification. For any construction period BMPs intended to be converted to post construction operation for stormwater attenuation, recharge, and/or treatment, the conversion is allowed by the MassDEP Stormwater Handbook BMP specifications and that the BMP has been properly cleaned or prepared for post construction operation, including removal of all construction period sediment trapped in inlet and outlet control structures;
    ii. as-built final construction BMP plans are included, signed and stamped by a Registered Professional Engineer, certifying the site is fully stabilized;
    iii. any illicit discharges to the stormwater management system have been removed, as per the requirements of Stormwater Standard 10;

Massachusetts Department of Environmental Protection
Bureau of Resource Protection - Wetlands
WPA Form 5 – Order of Conditions
Massachusetts Wetlands Protection Act M.G.L. c. 131, §40

Provided by MassDEP:
195-0217
MassDEP File #

eDEP Transaction #

Lawrence
City/Town

C. General Conditions Under Massachusetts Wetlands Protection Act (cont.)

iv. all post-construction stormwater BMPs are installed in accordance with the plans (including all planting plans) approved by the issuing authority, and have been inspected to ensure that they are not damaged and that they are in proper working condition;

v. any vegetation associated with post-construction BMPs is suitably established to withstand erosion.

c) The landowner is responsible for BMP maintenance until the issuing authority is notified that another party has legally assumed responsibility for BMP maintenance. Prior to requesting a Certificate of Compliance, or Partial Certificate of Compliance, the responsible party (defined in General Condition 18(e)) shall execute and submit to the issuing authority an Operation and Maintenance Compliance Statement ("O&M Statement) for the Stormwater BMPs identifying the party responsible for implementing the stormwater BMP Operation and Maintenance Plan ("O&M Plan") and certifying the following:

i.) the O&M Plan is complete and will be implemented upon receipt of the Certificate of Compliance, and

ii.) the future responsible parties shall be notified in writing of their ongoing legal responsibility to operate and maintain the stormwater management BMPs and implement the Stormwater Pollution Prevention Plan.

d) Post-construction pollution prevention and source control shall be implemented in accordance with the long-term pollution prevention plan section of the approved Stormwater Report and, if applicable, the Stormwater Pollution Prevention Plan required by the National Pollution Discharge Elimination System Multi-Sector General Permit.

e) Unless and until another party accepts responsibility, the landowner, or owner of any drainage easement, assumes responsibility for maintaining each BMP. To overcome this presumption, the landowner of the property must submit to the issuing authority a legally binding agreement of record, acceptable to the issuing authority, evidencing that another entity has accepted responsibility for maintaining the BMP, and that the proposed responsible party shall be treated as a permittee for purposes of implementing the requirements of Conditions 18(f) through 18(k) with respect to that BMP. Any failure of the proposed responsible party to implement the requirements of Conditions 18(f) through 18(k) with respect to that BMP shall be a violation of the Order of Conditions or Certificate of Compliance. In the case of stormwater BMPs that are serving more than one lot, the legally binding agreement shall also identify the lots that will be serviced by the stormwater BMPs. A plan and easement deed that grants the responsible party access to perform the required operation and maintenance must be submitted along with the legally binding agreement.

f) The responsible party shall operate and maintain all stormwater BMPs in accordance with the design plans, the O&M Plan, and the requirements of the Massachusetts Stormwater Handbook.

Massachusetts Department of Environmental Protection
Bureau of Resource Protection - Wetlands
WPA Form 5 – Order of Conditions
Massachusetts Wetlands Protection Act M.G.L. c. 131, §40

Provided by MassDEP:
195-0217
MassDEP File #

eDEP Transaction #
Lawrence
City/Town

C. General Conditions Under Massachusetts Wetlands Protection Act (cont.)

g) The responsible party shall:
1. Maintain an operation and maintenance log for the last three (3) consecutive calendar years of inspections, repairs, maintenance and/or replacement of the stormwater management system or any part thereof, and disposal (for disposal the log shall indicate the type of material and the disposal location);
2. Make the maintenance log available to MassDEP and the Conservation Commission ("Commission") upon request; and
3. Allow members and agents of the MassDEP and the Commission to enter and inspect the site to evaluate and ensure that the responsible party is in compliance with the requirements for each BMP established in the O&M Plan approved by the issuing authority.

h) All sediment or other contaminants removed from stormwater BMPs shall be disposed of in accordance with all applicable federal, state, and local laws and regulations.

i) Illicit discharges to the stormwater management system as defined in 310 CMR 10.04 are prohibited.

j) The stormwater management system approved in the Order of Conditions shall not be changed without the prior written approval of the issuing authority.

k) Areas designated as qualifying pervious areas for the purpose of the Low Impact Site Design Credit (as defined in the MassDEP Stormwater Handbook, Volume 3, Chapter 1, Low Impact Development Site Design Credits) shall not be altered without the prior written approval of the issuing authority.

l) Access for maintenance, repair, and/or replacement of BMPs shall not be withheld. Any fencing constructed around stormwater BMPs shall include access gates and shall be at least six inches above grade to allow for wildlife passage.

Special Conditions (if you need more space for additional conditions, please attach a text document):

20. For Test Projects subject to 310 CMR 10.05(11), the applicant shall also implement the monitoring plan and the restoration plan submitted with the Notice of Intent. If the conservation commission or Department determines that the Test Project threatens the public health, safety or the environment, the applicant shall implement the removal plan submitted with the Notice of Intent or modify the project as directed by the conservation commission or the Department.

Massachusetts Department of Environmental Protection
Bureau of Resource Protection - Wetlands
WPA Form 5 – Order of Conditions
Massachusetts Wetlands Protection Act M.G.L. c. 131, §40

Provided by MassDEP:
195-0217
MassDEP File #

eDEP Transaction #

Lawrence
City/Town

D. Findings Under Municipal Wetlands Bylaw or Ordinance

1. Is a municipal wetlands bylaw or ordinance applicable? ☒ Yes ☐ No

2. The Lawrence Conservation Commission hereby finds (check one that applies):

   a. ☐ that the proposed work cannot be conditioned to meet the standards set forth in a municipal ordinance or bylaw, specifically:

   1. Municipal Ordinance or Bylaw | 2. Citation

   Therefore, work on this project may not go forward unless and until a revised Notice of Intent is submitted which provides measures which are adequate to meet these standards, and a final Order of Conditions is issued.

   b. ☐ that the following additional conditions are necessary to comply with a municipal ordinance or bylaw:

   1. Municipal Ordinance or Bylaw | 2. Citation

3. The Commission orders that all work shall be performed in accordance with the following conditions and with the Notice of Intent referenced above. To the extent that the following conditions modify or differ from the plans, specifications, or other proposals submitted with the Notice of Intent, the conditions shall control.
   The special conditions relating to municipal ordinance or bylaw are as follows (if you need more space for additional conditions, attach a text document):

None necessary

Massachusetts Department of Environmental Protection
Bureau of Resource Protection - Wetlands
WPA Form 5 – Order of Conditions
Massachusetts Wetlands Protection Act M.G.L. c. 131, §40

Provided by MassDEP:
195-0217
MassDEP File #

eDEP Transaction #

Lawrence
City/Town

E. Signatures

This Order is valid for three years, unless otherwise specified as a special condition pursuant to General Conditions #4, from the date of issuance.

10/30/2023
1. Date of Issuance

Please indicate the number of members who will sign this form.
This Order must be signed by a majority of the Conservation Commission.

3
2. Number of Signers

The Order must be mailed by certified mail (return receipt requested) or hand delivered to the applicant. A copy also must be mailed or hand delivered at the same time to the appropriate Department of Environmental Protection Regional Office, if not filing electronically, and the property owner, if different from applicant.

Signature	Tennnis Lilly Printed Name
Signature	Rachel Torres Printed Name
Signature	Eric Lundquist Printed Name
Signature	Printed Name
Signature	Printed Name
Signature	Printed Name
Signature	Printed Name
Signature	Printed Name

☒ by hand delivery on

10/30/2023
Date

☐ by certified mail, return receipt requested, on

Date

Massachusetts Department of Environmental Protection
Bureau of Resource Protection - Wetlands
WPA Form 5 – Order of Conditions
Massachusetts Wetlands Protection Act M.G.L. c. 131, §40

Provided by MassDEP:
195-0217
MassDEP File #

eDEP Transaction #
Lawrence
City/Town

F. Appeals

The applicant, the owner, any person aggrieved by this Order, any owner of land abutting the land subject to this Order, or any ten residents of the city or town in which such land is located, are hereby notified of their right to request the appropriate MassDEP Regional Office to issue a Superseding Order of Conditions. The request must be made by certified mail or hand delivery to the Department, with the appropriate filing fee and a completed Request for Departmental Action Fee Transmittal Form, as provided in 310 CMR 10.03(7) within ten business days from the date of issuance of this Order. A copy of the request shall at the same time be sent by certified mail or hand delivery to the Conservation Commission and to the applicant, if he/she is not the appellant.

Any appellants seeking to appeal the Department's Superseding Order associated with this appeal will be required to demonstrate prior participation in the review of this project. Previous participation in the permit proceeding means the submission of written information to the Conservation Commission prior to the close of the public hearing, requesting a Superseding Order, or providing written information to the Department prior to issuance of a Superseding Order.

The request shall state clearly and concisely the objections to the Order which is being appealed and how the Order does not contribute to the protection of the interests identified in the Massachusetts Wetlands Protection Act (M.G.L. c. 131, § 40), and is inconsistent with the wetlands regulations (310 CMR 10.00). To the extent that the Order is based on a municipal ordinance or bylaw, and not on the Massachusetts Wetlands Protection Act or regulations, the Department has no appellate jurisdiction.

Massachusetts Department of Environmental Protection
Bureau of Resource Protection - Wetlands
WPA Form 5 – Order of Conditions
Massachusetts Wetlands Protection Act M.G.L. c. 131, §40

Provided by MassDEP:
195-0217
MassDEP File #

eDEP Transaction #

Lawrence
City/Town

G. Recording Information

Prior to commencement of work, this Order of Conditions must be recorded in the Registry of Deeds or the Land Court for the district in which the land is located, within the chain of title of the affected property. In the case of recorded land, the Final Order shall also be noted in the Registry's Grantor Index under the name of the owner of the land subject to the Order. In the case of registered land, this Order shall also be noted on the Land Court Certificate of Title of the owner of the land subject to the Order of Conditions. The recording information on this page shall be submitted to the Conservation Commission listed below.

Conservation Commission

Detach on dotted line, have stamped by the Registry of Deeds and submit to the Conservation Commission.

To:

Conservation Commission

Please be advised that the Order of Conditions for the Project at:

Project Location | MassDEP File Number

Has been recorded at the Registry of Deeds of:

County | Book | Page

for: Property Owner

and has been noted in the chain of title of the affected property in:

Book | Page

In accordance with the Order of Conditions issued on:

Date

If recorded land, the instrument number identifying this transaction is:

Instrument Number

If registered land, the document number identifying this transaction is:

Document Number

Signature of Applicant

Massachusetts Department of Environmental Protection
Bureau of Resource Protection - Wetlands

Request for Departmental Action Fee Transmittal Form

Massachusetts Wetlands Protection Act M.G.L. c. 131, §40

DEP File Number:

Provided by DEP

A. Request Information

1. Location of Project

a. Street Address

b. City/Town, Zip

c. Check number

d. Fee amount

Important: When filling out forms on the computer, use only the tab key to move your cursor - do not use the return key.

2. Person or party making request (if appropriate, name the citizen group's representative):

Name

Mailing Address

City/Town

State

Zip Code

Phone Number

Fax Number (if applicable)

3. Applicant (as shown on Determination of Applicability (Form 2), Order of Resource Area Delineation (Form 4B), Order of Conditions (Form 5), Restoration Order of Conditions (Form 5A), or Notice of Non-Significance (Form 6)):

Name

Mailing Address

City/Town

State

Zip Code

Phone Number

Fax Number (if applicable)

4. DEP File Number:

B. Instructions

1. When the Departmental action request is for (check one):

☐ Superseding Order of Conditions – Fee: $120.00 (single family house projects) or $245 (all other projects)

☐ Superseding Determination of Applicability – Fee: $120

☐ Superseding Order of Resource Area Delineation – Fee: $120

Massachusetts Department of Environmental Protection
Bureau of Resource Protection - Wetlands

Request for Departmental Action Fee Transmittal Form

Massachusetts Wetlands Protection Act M.G.L. c. 131, §40

DEP File Number:

Provided by DEP

B. Instructions (cont.)

Send this form and check or money order, payable to the *Commonwealth of Massachusetts,* to:

Department of Environmental Protection
Box 4062
Boston, MA 02211

2. On a separate sheet attached to this form, state clearly and concisely the objections to the Determination or Order which is being appealed. To the extent that the Determination or Order is based on a municipal bylaw, and not on the Massachusetts Wetlands Protection Act or regulations, the Department has no appellate jurisdiction.

3. Send a **copy** of this form and a **copy** of the check or money order with the Request for a Superseding Determination or Order by certified mail or hand delivery to the appropriate DEP Regional Office (see https://www.mass.gov/service-details/massdep-regional-offices-by-community).

4. A copy of the request shall at the same time be sent by certified mail or hand delivery to the Conservation Commission and to the applicant, if he/she is not the appellant.

DOCUMENT A00865

CHAPTER 91
MINOR MODIFICATION APPLICATION

THIS PAGE IS INTENTIONALLY LEFT BLANK

404 Wyman Street, Ste. 375
Waltham, MA 02451
T 781.419.7696
TRCcompanies.com

April 28, 2023

Daniel Padien, Director
MassDEP Waterways Program
1 Winter Street, 5th floor
Boston, MA 02108

Re: ***Minor Modification Notice—Bridge Modifications***
Lawrence Rail Trail Project
Lawrence-Manchester Rail Corridor
Merrimack River, Lawrence, MA
TRC Project No. 274047.0000.0000

Dear Mr. Padien,

On behalf of the City of Lawrence (the City), TRC Environmental Corporation (TRC) submits this notice of minor modification for the Lawrence Manchester Rail Corridor (LMRC) Rail Trail Project (the Project) pursuant to 310 CMR 9.22 of the Massachusetts Department of Environmental Protection Waterways Regulations. The Project is located along the former Manchester-Lawrence railroad right-of-way (ROW) from Merrimack Street in Lawrence to the Lawrence/Methuen city line. The ROW crosses multiple parcels following the existing railroad bed, including four bridge crossings, one of which is over the non-tidal portion of the Merrimack River. The City seeks a minor modification to authorize a minor change in use from a bridge carrying a railroad to a bridge carrying a bicycle/pedestrian path and for minor alterations to the structure to support the minor change in use.

Manchester and Lawrence Railroad Bridge

The Manchester and Lawrence Railroad is a branch of the former Boston and Maine Railroad (B&MRR), which is currently owned and operated by the Massachusetts Bay Transportation Authority (MBTA). The Manchester and Lawrence Railroad was originally an independent railroad chartered in 1847 in Manchester, New Hampshire. The Manchester and Lawrence Railroad ran from Manchester, New Hampshire to Salem, New Hampshire to meet the Boston and Maine Railroad, which offered service from Salem to Lawrence. Following World War II, passenger service greatly decreased and was eventually eliminated in 1953. The branch was later purchased in or around 1983 by PanAm Railways primarily for freight service, after which time service incrementally decreased. All freight service along this branch eventually ceased in 2001.

The City of Lawrence was incorporated in 1847. The Great Stone Dam, located just west of the Manchester and Lawrence Railroad Bridge, was also constructed around this time. It is believed that the Manchester and Lawrence Railroad Bridge may have been constructed following the construction of the dam due to resulting water levels in the river, but exact records have not been found. Attached to this letter is a series of aerial maps and photographs depicting the area of the bridge from 1886 to 2021. In the 1886 topographic map and the 1938 photography (Attachment A, sheets 1 through 4), the railroad bridge is clearly in existence.

The Manchester and Lawrence Railroad Bridge (Bridge No. L-04-032) is a 550-foot open deck rail bridge with timber ties. The rail bridge consists of a single set of railroad tracks, and contains utility and telecommunication cables attached to the bridge within the right-of-way.

Following the inactivity of the railroad line, the railroad bridge has remained in place without apparent alterations (see Attachment A, sheets 6 through 7). Portions of the bridge are covered in overgrown vegetation, and it is

currently unknown whether the corridor is actively maintained by the MBTA or the City. Additionally, the areas around the abutments have deteriorated and need maintenance to bring the approaches back to grade.

MGL Chapter 91 Authorization Status

The railroad bridge that crosses the non-tidal portion of the Merrimack River falls within Chapter 91 jurisdiction under 310 CMR 9.04(1)(d). Based on our research, the bridge is apparently unauthorized under MGL Chapter 91.

TRC performed historic license research to attempt to identify the Chapter 91 license or legislative authorization for the railroad bridge. Desktop research including an online search of the Registry of Deeds, the MassDEP Waterways License card catalog, and coordination with the staff at the Chapter 91 Waterways Program and the Massachusetts State Archives also did not produce any history of licenses issued for the bridge. No authorizations for the railroad bridge under MGL Chapter 91 were found during this research. Further, research of the Massachusetts Legislative Acts did not yield evidence that the bridge was constructed under legislative decree. Therefore, the railroad bridge is apparently unauthorized based on our research.

The continuation of the apparently unauthorized bridge is an activity not requiring a license or permit under 310 CMR 9.05(3). Specifically, under the following provisions:

- 9.05(3)(c): continuation of any existing, unauthorized public service project[1], provided that no unauthorized structural alteration or change in use has occurred subsequent to January 1, 1984
- 9.05(3)(f): continuation of any existing, unauthorized use of fill or structures constructed prior to 1939 on any non-tidal river or stream subject to jurisdiction under 310 CMR 9.04(1)(e), provided that no unauthorized structural alteration or change in use has occurred subsequent to January 1, 1984

Therefore, the bridge is exempt from licensing pursuant to 310 CMR 9.05.

Lawrence Rail Trail Project

The City is proposing the Lawrence Rail Trail Project, which is the conversion of the existing, abandoned railroad bed to an Alternative Transportation Corridor (ATC) along the LMRC in Lawrence, MA. Conversion of the railroad corridor will provide an alternative transportation route connecting the City of Methuen rail trail and the regional trail network, therefore increasing public use of the LMRC.

On the railroad bridge, the proposed construction involves the removal of the existing tracks and timber ties, relocation of all existing utilities, deck reconstruction utilizing precast concrete deck panels, installation of a paved pedestrian path, installation of bridge railings, and landscaping work. All existing cables and pipelines except for the steam line, which will be entirely removed, will be relocated to the downstream section of the bridge. Subsequent to the relocation of existing cables and pipelines, precast concrete deck panels will be installed. Additional work on bridge approaches will involve the placement of fill (less than 1 cubic foot) to bring the area around the abutments

[1] The railroad bridge's purpose is to provide transportation services to the public by crossing over the Merrimack River. Therefore, it meets the 310 CMR 9.02 definition of an Infrastructure Crossing Facility, which is further defined to be a Public Service Project.

back to grade. The Project does not involve any substructure alteration. The 75% design plans for the Project, prepared by TEC, Inc., are provided as Attachment B.

The work proposed for the railroad bridge does not represent a Substantial Structural Alteration as defined at 310 CMR 9.02[2] since the work will not change the height or ground coverage of the bridge or change the surface area of fill adjacent to the bridge.

The change in the bridge's use from providing a railroad-based transportation crossing of the Merrimack River to a bicycle/pedestrian-based crossing would not represent Substantial Change in Use as defined at 310 CMR 9.02[3] since the use would still be an Infrastructure Crossing Facility that facilitates transportation over the Merrimack River (i.e., the changed use is related to the original use).

Minor Modification

The Project qualifies as a minor modification and maintenance of an existing Infrastructure Crossing Facility, which is apparently unlicensed, but is exempt from licensing per 310 CMR 9.05(3)(c) and (f). The minor change in use and the structural modifications to the bridge associated with the Lawrence Rail Trail Project represent minor changes from those of the existing use and structure, and therefore do not require a new Chapter 91 Waterways license for the continued use of the bridge for public transportation. The conversion of the railroad tracks along the bridge to a paved pedestrian trail will continue to provide an alternative public transportation route while also increasing public access to the Merrimack River. By removing the railroad tracks and paving over the bridge to create the pedestrian trail, the abandoned, Manchester and Lawrence Railroad Bridge will once again serve the public as a public transportation route.

The City will be submitting a Notice of Intent to the Lawrence Conservation Commission to authorize the Lawrence Rail Trail Project under the Wetland Protection Act and the Lawrence Wetlands Protection Ordinance.

If you have any questions, please do not hesitate to contact me at (781) 419-7705 or via email at wchapman@trccompanies.com.

Sincerely,

TRC ENVIRONMENTAL CORPORATION

William Chapman
Senior Director

Attachments: Attachment A – Historic Aerial Photographs and Maps (1886 – 2021)
Attachment B – TEC 75% Design Plans

---

[2] "…a change in the dimensions of a principal building or structure which increases by more than 10% the height or ground coverage of the building or structure specified in the authorization or license, or an increase by more than 10% of the surface area of the fill specified in the authorization or license."

[3] "…a use for a continuous period of at least one year of 10% or more of the surface area of the authorized or licensed premises or structures for a purpose unrelated to the authorized or licensed use or activity, whether express or implied."

C: Susan McArthur, Lawrence Cash – MassDOT
Cori Beckwith, Ryan Morrison – MassDOT
Daniel McCarthy – City of Lawrence
Jody Trunfio – TEC, Inc.

Attachment A: Historic Aerial Photographs and Maps (1886 – 2021)

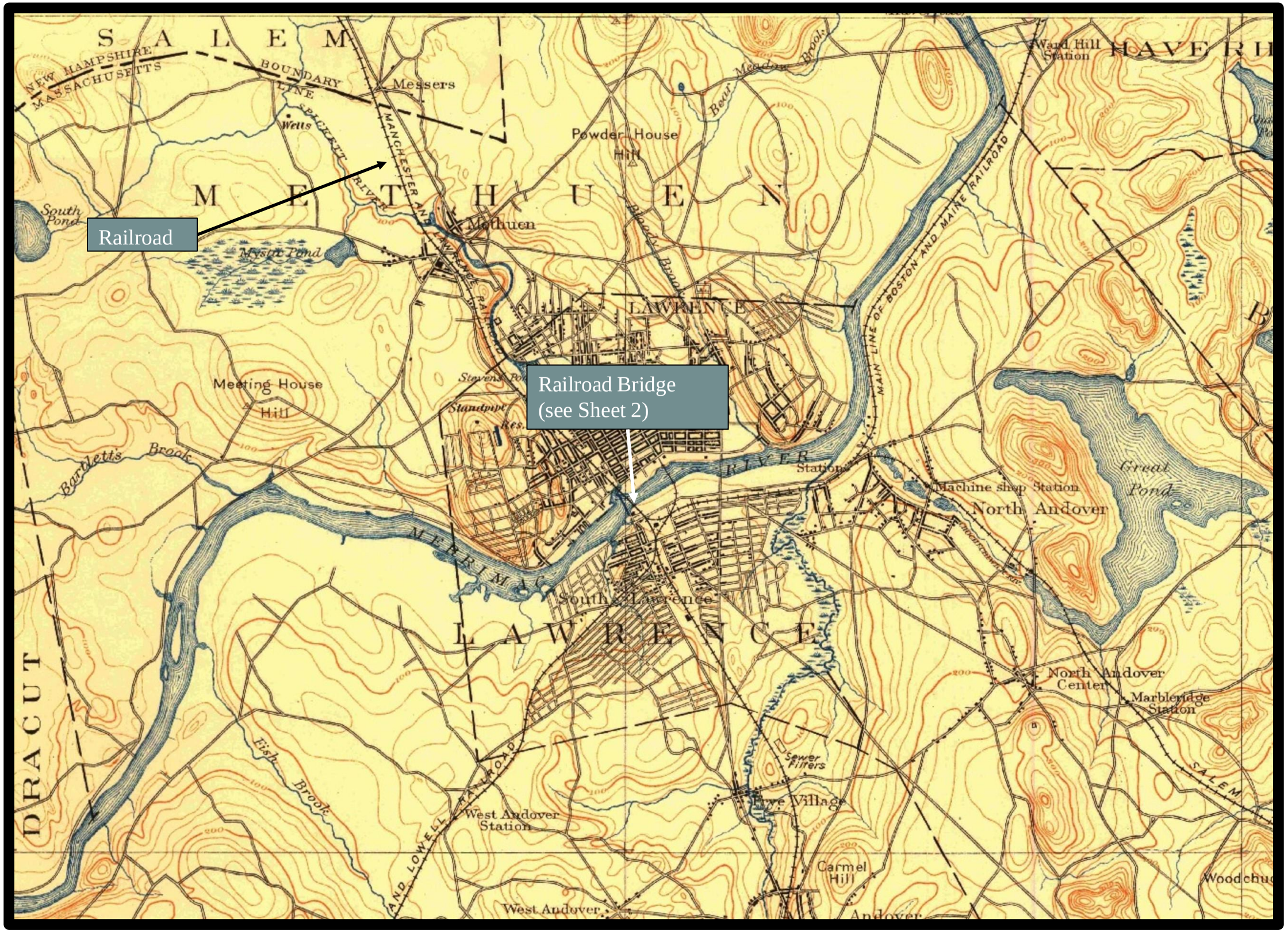

Photograph No.:1a
Lawrence, Massachusetts U.S. Geological Survey - 1886

Lawrence Rail Trail Project
Lawrence, MA

Source: USGS (https://ngmdb.usgs.gov/topoview/viewer/)
Scale: 1:62,500

USGS Topographic Map
1886

Sheet 1 of 7

A00865 - 9

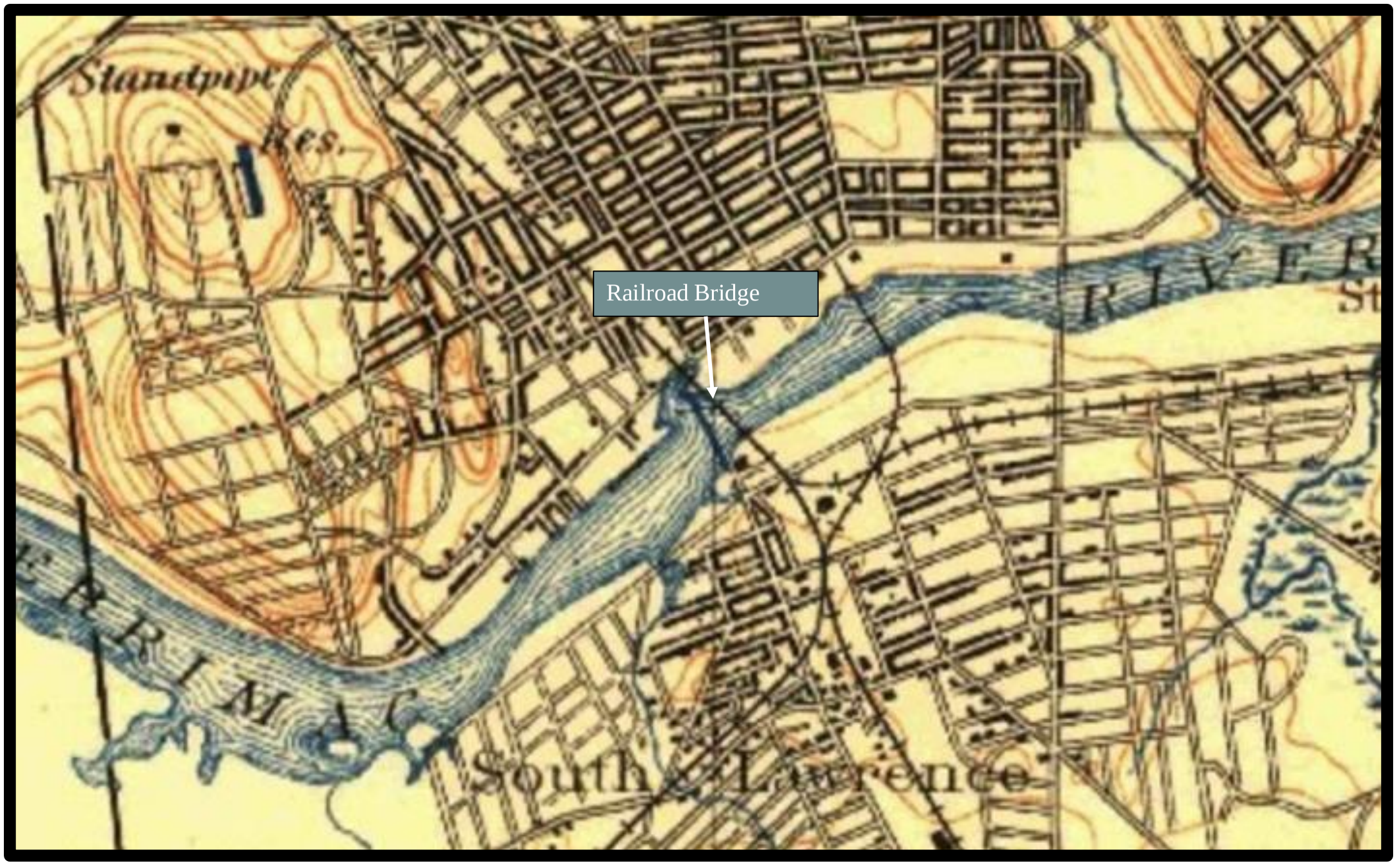

Photograph No.:1b
Lawrence, Massachusetts U.S. Geological Survey (Zoomed In) - 1886

Lawrence Rail Trail Project
Lawrence, MA

Source: USGS (https://ngmdb.usgs.gov/topoview/viewer/)
Scale: 1:62,500

USGS Topographic Map
1886

Sheet 2 of 7

Proposal No. 608930-128034

A00865 - 10

Proposal No. 608930-128034

Photograph No.:2a
Aerial Photo A-4-D 1-88 - 1938

Lawrence Rail Trail Project
Lawrence, MA

Source: Jeffrey Bruce, MassDOT (www.mass.gov/massdot)
Scale: 1:24,000

Historic Aerial Photography
1938

Sheet 3 of 7

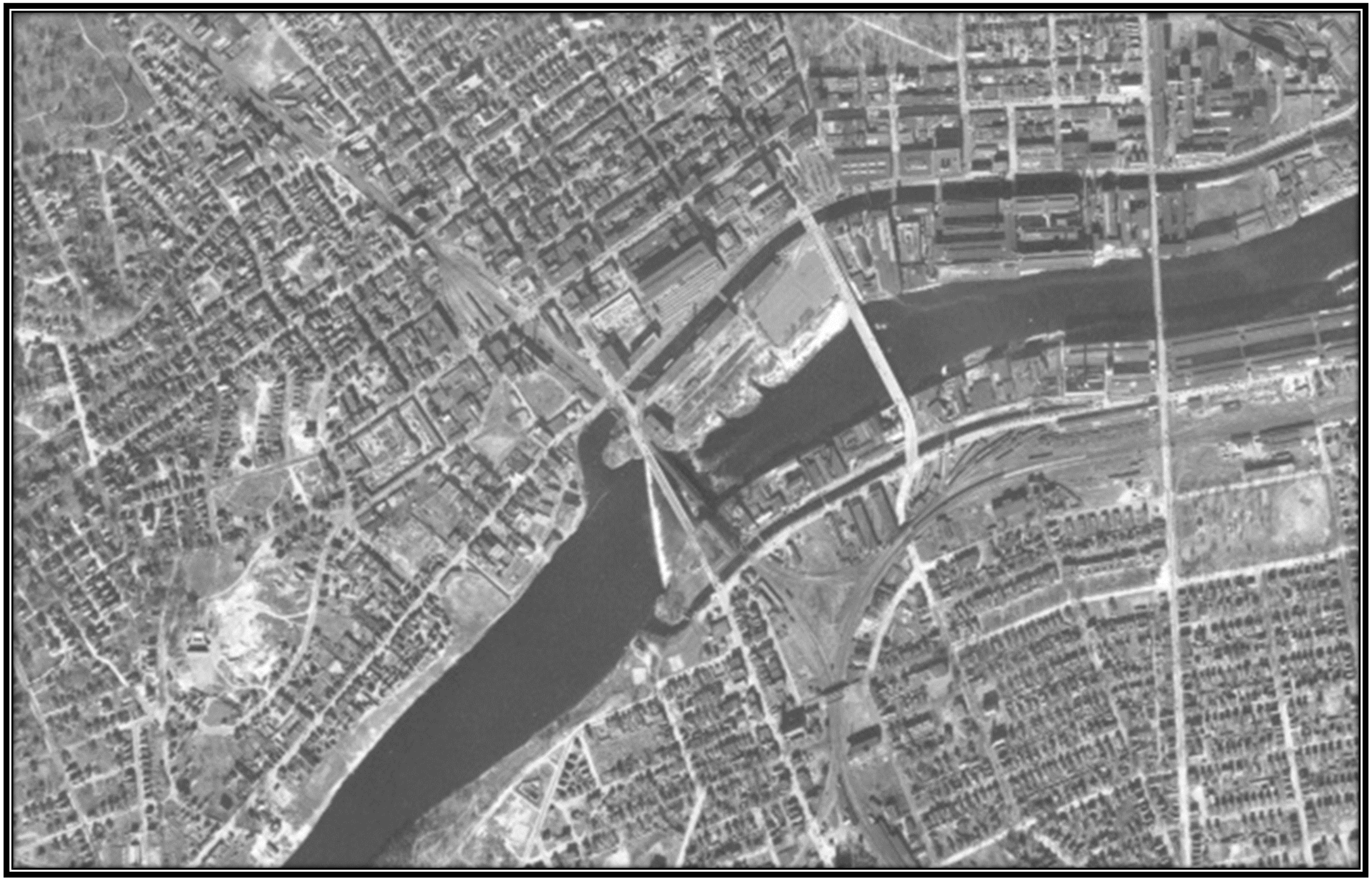

Photograph No.:2b
Aerial Photo A-4-D 1-88 (Zoomed In) - 1938

Lawrence Rail Trail Project
Lawrence, MA

Source: Jeffrey Bruce, MassDOT (www.mass.gov/massdot)
Scale: 1:24,000

Historic Aerial Photography
1938

Sheet 4 of 7

A00865 - 12

Proposal No. 608930-128034

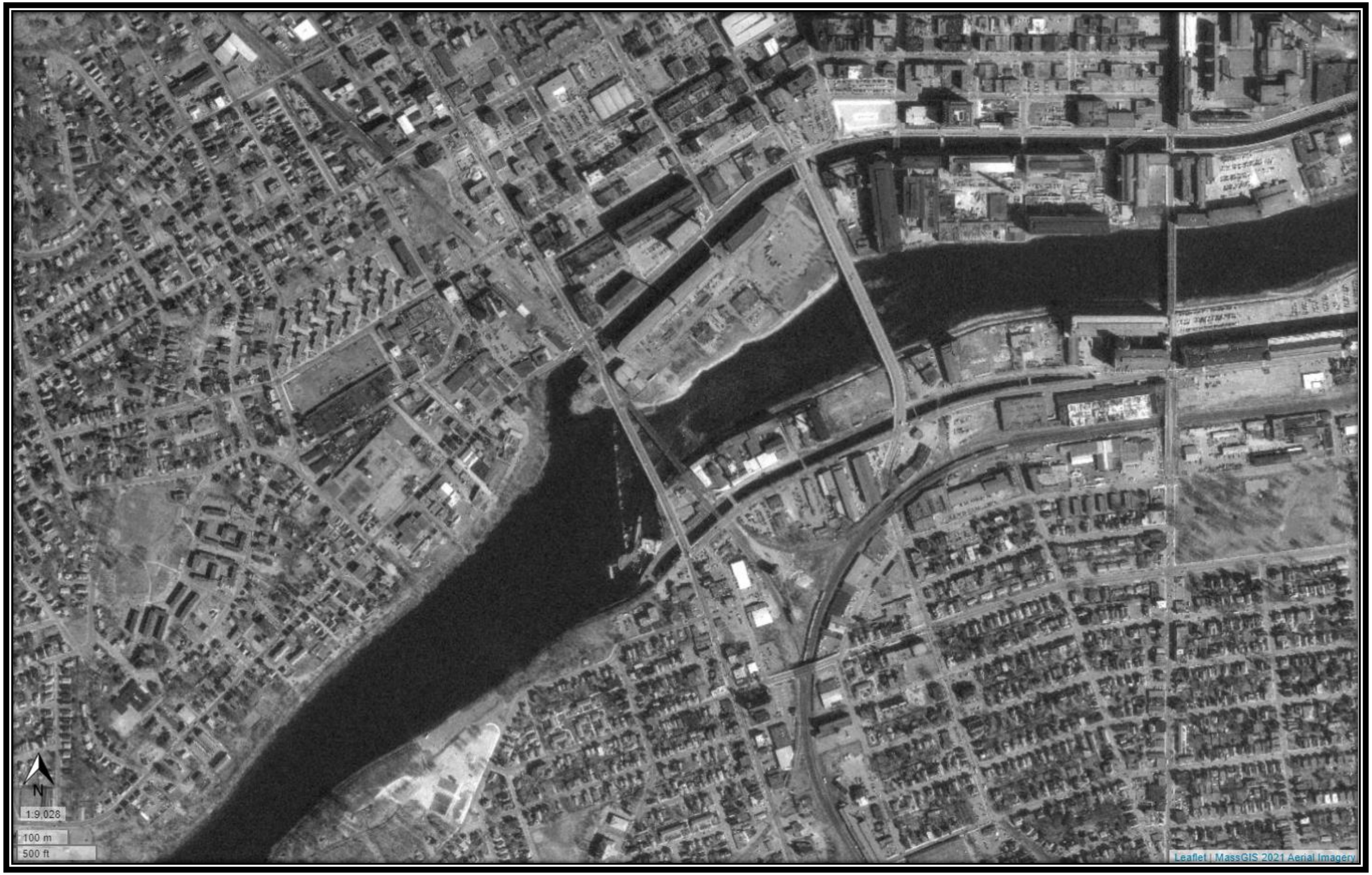

Photograph No.:3
Aerial Photo – circa 1990

Lawrence Rail Trail Project
Lawrence, MA

Source: Mass Mapper
Scale: 1: 9,028

Historic Aerial Photography
Circa 1990

Sheet 5 of 7

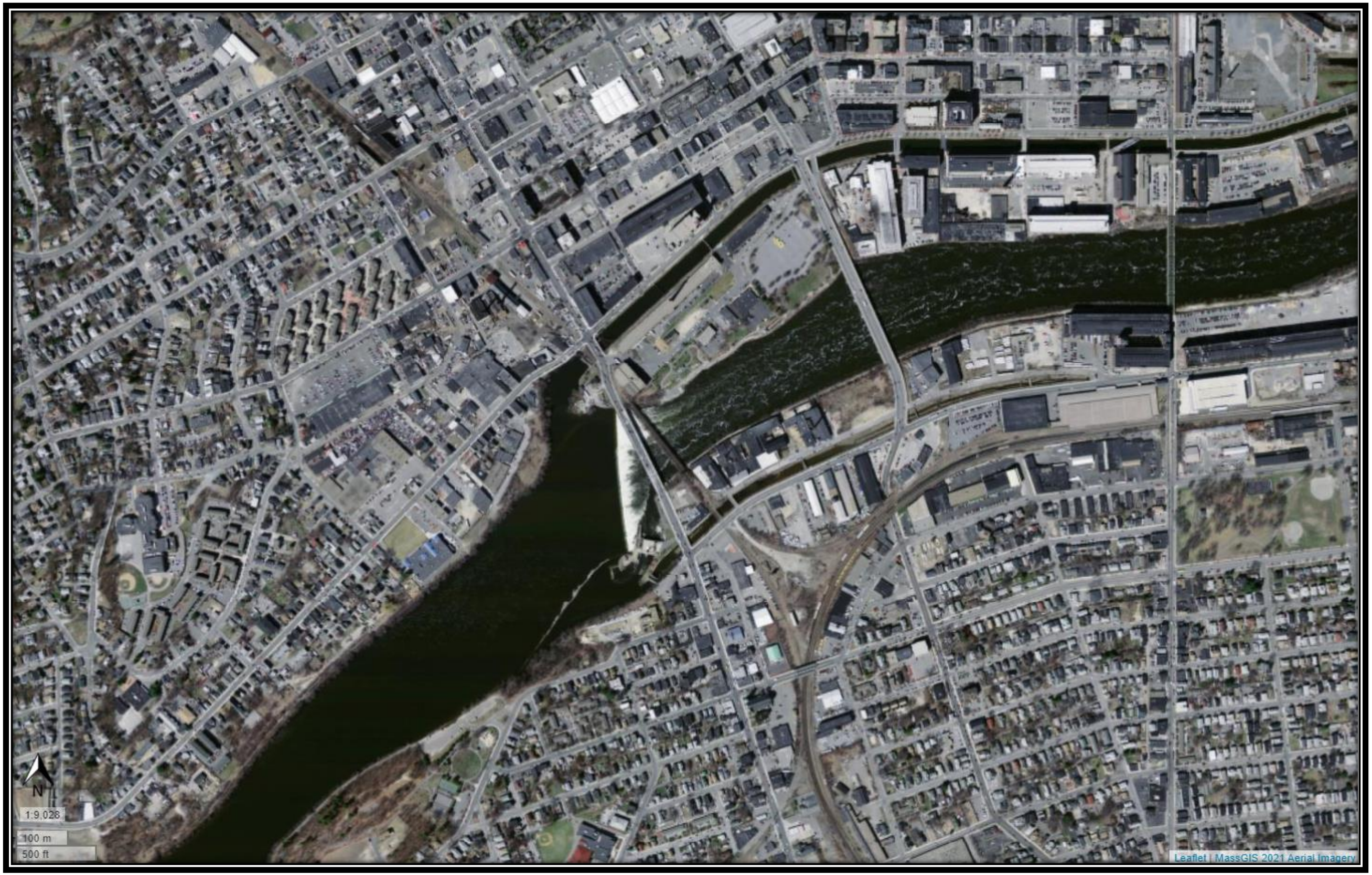

Photograph No.:4
Aerial Photo – circa 2008/2009

Lawrence Rail Trail Project
Lawrence, MA

Source: Mass Mapper
Scale: 1:9,028

Historic Aerial Photography
Circa 2008/2009

Sheet 6 of 7

Photograph No.:5
Aerial Photo - 2021

Lawrence Rail Trail Project
Lawrence, MA

Source: Mass Mapper
Scale: 1:9,028

Historic Aerial Photography
2021

Sheet 7 of 7

Attachment B: TEC 75% Design Plans

DRAFT

HIGHWAY GUARD DETAILS
STA 1+31 RT TO STA 1+31 RT TRAILING ANCHORAGE

TRAFFIC SIGNAL CONDUIT
NONE

WATER SUPPLY ALTERATIONS
NONE

DRAINAGE DETAILS
NONE

LEGEND
- (#) = PEDESTRIAN CURB RAMP NUMBER
- # = DRIVEWAY NUMBER

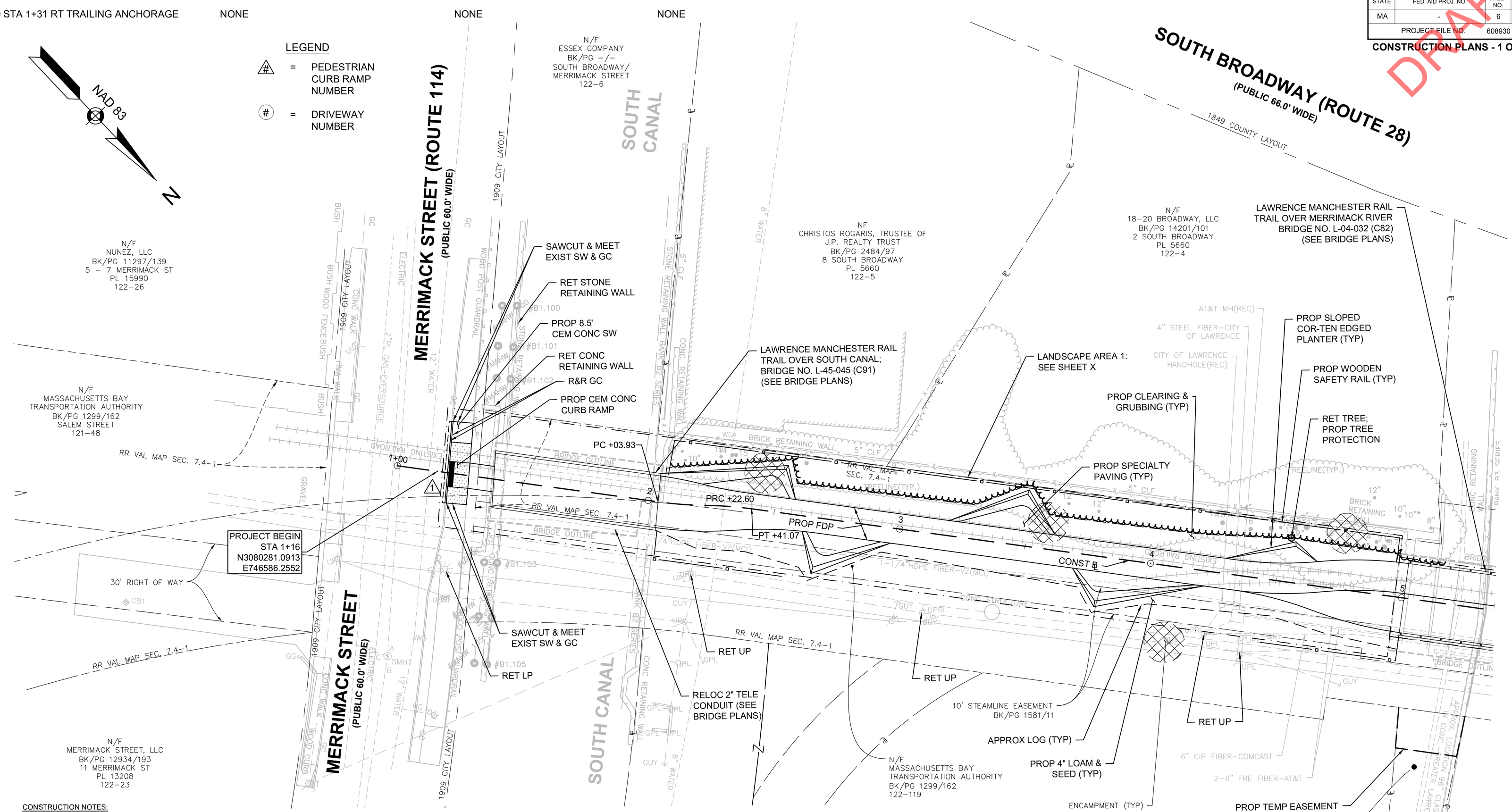

CONSTRUCTION NOTES:

1. EXISTING CONDITIONS INFORMATION COMPILED FROM AN ON-THE-GROUND INSTRUMENT SURVEY PERFORMED BY GREENMAN-PEDERSON, INC. IN JANUARY & FEBRUARY, 2017 AND SUPPLEMENTED IN JANUARY, 2022.

   HORIZONTAL DATUM = NAD83 (MASSACHUSETTS STATE PLANE COORDINATES)
   VERTICAL DATUM = NAVD88

2. ALL EXISTING STATE, COUNTY, AND TOWN LOCATION LINES HAVE BEEN ESTABLISHED FROM AN ACTUAL ON-THE-GROUND SURVEY. ALL PRIVATE PROPERTY LINES HAVE BEEN ESTABLISHED FROM AVAILABLE INFORMATION AND THEIR EXACT LOCATION ARE NOT GUARANTEED.

3. THE LOCATIONS OF EXISTING UNDERGROUND UTILITIES ARE SHOWN IN AN APPROXIMATE WAY ONLY AND HAVE NOT BEEN INDEPENDENTLY VERIFIED BY THE OWNER OR ITS REPRESENTATIVE. THE CONTRACTOR SHALL CONTACT DIGSAFE (1-888-DIGSAFE) A MINIMUM OF 72 HOURS PRIOR TO ANY CONSTRUCTION TO VERIFY THE LOCATION OF ALL EXISTING UTILITIES BEFORE COMMENCING WORK, AND SHALL BE FULLY RESPONSIBLE FOR ANY AND ALL DAMAGES WHICH MIGHT BE OCCASIONED BY THE CONTRACTOR'S FAILURE TO LOCATE AND PRESERVE ANY AND ALL UNDERGROUND UTILITIES.

4. WHERE AN EXISTING UTILITY IS FOUND TO CONFLICT WITH THE PROPOSED WORK, THE LOCATION, ELEVATION AND SIZE OF THE UTILITY SHALL BE ACCURATELY DETERMINED WITHOUT DELAY BY THE CONTRACTOR, AND THE INFORMATION FURNISHED TO THE ENGINEER FOR RESOLUTION OF THE CONFLICT.

5. ALL MUNICIPALLY OWNED UTILITY STRUCTURES (CATCH BASINS, DRAIN MANHOLES, WATER GATES, ETC.) SHALL BE ADJUSTED BY THE CONTRACTOR TO FINISHED GRADE UNLESS DIRECTED OTHERWISE. THE CONTRACTOR SHALL COORDINATE WITH THE LAWRENCE DEPARTMENT OF PUBLIC WORKS (LDPW) TO ALLOW FOR THE REPLACEMENT OF EXISTING UTILITY STRUCTURES IN POOR CONDITION. THESE REPLACEMENT UTILITY STRUCTURES TO BE PROVIDED AND INSTALLED BY THE DPW.

6. ALL PRIVATELY OWNED UTILITY STRUCTURES (GAS GATES, ELECTRIC /TELEPHONE MANHOLES, ETC.) SHALL BE ADJUSTED TO FINISHED GRADE BY THE PRIVATE UTILITY COMPANY, UNLESS DIRECTED OTHERWISE. THE CONTRACTOR SHALL COORDINATE WITH PRIVATE UTILITY COMPANIES FOR THE ALTERATION AND ADJUSTMENT, AS NECESSARY.

7. PROPOSED LATERAL DRAIN PIPES SHALL BE INSTALLED WITH A PITCH OF 1.0% (MINIMUM) UNLESS OTHERWISE NOTED.

8. AREAS OUTSIDE THE LIMITS OF PROPOSED WORK DISTURBED BY THE CONTRACTOR'S OPERATIONS SHALL BE RESTORED BY THE CONTRACTOR TO THEIR ORIGINAL CONDITION AT THE CONTRACTORS EXPENSE.

9. ALL DISTURBED AREAS OUTSIDE THE CURBLINE SHALL BE STABILIZED WITH 4" LOAM AND SEED, UNLESS OTHERWISE NOTED.

10. THE TERM "PROPOSED" (PROP) MEANS WORK TO BE CONSTRUCTED USING NEW MATERIALS OR, WHERE APPLICABLE, RE-USING EXISTING MATERIALS IDENTIFIED AS "REMOVE AND RESET" (R&R), AS APPROVED BY THE ENGINEER.

11. THE TERM "MEET EXIST" MEANS TO MEET BOTH THE EXISTING ALIGNMENT AND ELEVATION.

12. ALL EXISTING TREES WITHIN THE PROJECT LIMITS SHALL BE RETAINED AND PROTECTED WITH TREE PROTECTION UNLESS INDICATED OTHERWISE ON THE DRAWINGS. ALL PROVIDED DIMENSIONS REFER TO THE DIAMETER AT BREAST HEIGHT.

13. AN UNOBSTRUCTED PATH OF TRAVEL WITH A MINIMUM WIDTH OF 3'-0" (EXCLUDING THE WIDTH OF CURB) SHALL BE MAINTAINED PAST ALL OBSTRUCTIONS (UTILITY POLES, LIGHT POLES, SIGNS, MAILBOXES, ALONG DRIVEWAY OPENINGS, ETC.)

14. ALL RAILROAD TRACKS AND TIMBER SHALL BE REMOVED WITHIN PROJECT LIMITS.

15. DETECTABLE WARNING PANELS ARE REQUIRED ON ALL PROPOSED PEDESTRIAN CURB RAMPS AND SHALL BE INSTALLED IN ACCORDANCE WITH MASSDOT CONSTRUCTION STANDARDS.

EXISTING INVERT TABLE

CB1
RIM=50.98'

SMH1
RIM=50.16'
INV.(a)=40.91
INV.(b)=40.78
INV.(c)=42.75

0 20 50 100
SCALE: 1" = 20'

608930_HDS(CONSTRUCTION PLANS).DWG Plotted on 26-Sep-2022 2:41 PM

Proposal No. 608930-128034

A00865 - 16

608930_HD5(CONSTRUCTION PLANS).DWG Plotted on 26-Sep-2022 2:41 PM

LAWRENCE
LMRC RAIL TRAIL

STATE	FED. AID PROJ. NO.	SHEET NO.	TOTAL SHEETS
MA	-	7	125
	PROJECT FILE NO. 608930		

CONSTRUCTION PLANS - 2 OF 15

DRAFT

LEGEND

△# = PEDESTRIAN CURB RAMP NUMBER

(#) = DRIVEWAY NUMBER

TRAFFIC SIGNAL CONDUIT
NONE

WATER SUPPLY ALTERATIONS
NONE

DRAINAGE DETAILS
NONE

HIGHWAY GUARD DETAILS
NONE

CONTINUED ON SHEET NO. 8

SOUTH BROADWAY (ROUTE 28)
(PUBLIC 66.0' WIDE)

1849 COUNTY LAYOUT

PROP LANDSCAPE AREA; SEE LANDSCAPE PLANS (TYP)

PROP BRIDGE RAILING

PROP WOODEN PEDESTRIAN PATH

SEE BRIDGE PLANS FOR TYPICAL SECTION

RR VAL MAP SEC. 7.4–1

MASSACHUSETTS BAY TRANSPORTATION AUTHORITY
N/F
BK/PG 1299/162
MERRIMACK STREET
122–19

EXISTING RAILROAD

BRIDGE OUTLINE

CONST ℄

10' STEAMLINE EASEMENT BK/PG 1581/11

RELOC ALL EXIST UTILITIES (SEE BRIDGE PLANS); REM 10" STEAM LINE

LAWRENCE MANCHESTER RAIL TRAIL OVER MERRIMACK RIVER BRIDGE NO. L-04-032 (C82) (SEE BRIDGE PLANS)

LANDSCAPE AREA 2; SEE SHEET X

MERRIMACK RIVER

6" CIP FIBER–COMCAST

2–6" FRE FIBER–AT&T

2" STEEL FIBER–VZ(MCI)

4" STEEL FIBER–CITY OF LAWRENCE

6" OVER 24" STEEL STEAM

CONC RETAINING WALL

BANK B3 SERIES

APPROX. LOCATION 96" CLASS III RCP SEWER ENCASED IN CONC; GREATER LAWRENCE SANITARY DISTRICT

PROP TEMP EASEMENT

GREATER LAWRENCE SANITARY DISTRICT SEWER EASEMENT BK/PG 1219/203

N/F
GREATER LAWRENCE SANITARY DISTRICT
PARKER STREET
BK/PG 1215/721
103–3

PROP TEMP EASEMENT

PROP WOODEN SAFETY RAIL (TYP)

PROP PERM EASEMENT

VZ(MCI) HANDHOLE (REC)

N/F
MASSACHUSETTS ELECTRIC COMPANY
BK/PG 1011/438
BROADWAY
143–23

N/F
ESSEX COMPANY
BK/PG -/-
ESSEX ST
124–1

GREATER LAWRENCE SANITARY DISTRICT SEWER EASEMENT BK/PG 1219/303

SCALE: 1" = 20'

NAD 83

N

CONTINUED ON SHEET NO. 6

THIS PAGE IS INTENTIONALLY LEFT BLANK

Need Help? For technical assistance in using this web application, please call the ePLACE Help Desk Team at (844) 733-7522 or (844) 73-ePLAC between the hours of 7:30 AM-5:00 PM Monday-Friday, with the exception of all Commonwealth and Federally observed holidays. If you prefer, you can also e-mail us at ePLACE_helpdesk@mass.gov. For assistance with non-technical questions, please contact the issuing Agency directly using the links below.

Contact:
Energy and Environmental Affairs, MASSDEP
Energy and Environmental Affairs, MDAR
Energy and Environmental Affairs, DCR

Convenience Fee: Please note there will be a convenience fee for all online credit card transactions. There is also a nominal fee for online payment by check.

Home

DEP Applications

WWAR - Chapter 91 Administrative Request(s) Application

1 Application Information	2 Documents	3 Review	4 Application Submitted

Step 4: Application Submitted

Successfully Completed.

Thank you for using our online services.
Your Record Number is 23-WWAR-0040-APP.

You will need this number to check the status of your application.

THIS PAGE IS INTENTIONALLY LEFT BLANK

DOCUMENT A00866

CHAPTER 91
MINOR MODIFICATION APPROVAL

THIS PAGE IS INTENTIONALLY LEFT BLANK

Commonwealth of Massachusetts
Executive Office of Energy & Environmental Affairs

Department of Environmental Protection
100 Cambridge Street Suite 900 Boston, MA 02114 • 617-292-5500

Maura T. Healy
Governor

Kimberley Driscoll
Lieutenant Governor

Rebecca L. Tepper
Secretary

Bonnie Heiple
Commissioner

May 23, 2023

City of Lawrence, Daniel McCarthy, Land Use Planner
c/o Payson Whitney, TRC Environmental Corporation
404 Wyman Street, Suite 375
Waltham, MA 02451

Re: **23-WWAR-0040-APP:** Minor Project Modification to Chapter 75 of Acts of 1846
Lawrence Rail Trail Project, Merrimack Street Railroad Bridge Right-of-Way
Waters of the Merrimack River, Lawrence, Essex County

Dear Mr. McCarthy,

The Massachusetts Department of Environmental Protection Waterways Regulation Program (the "Department") received the letter and supporting documentation submitted on May 4, 2023, on behalf of the City of Lawrence, requesting a Minor Project Modification pursuant to 310 CMR 9.22(3) to authorize a change in use and to conduct improvements and repairs within an existing railroad right-of-way located alongside the O'Leary Bridge along Broadway between North and South Canal Streets, and over waters of the Merrimack River. The submittal includes**:**

- Letter in support of the request for a Minor Project Modification dated April 28, 2023;
- Attachment A – Historical Aerial Photographs and Maps (1886 – 2021), Lawrence Rail Trail Project, Lawrence, MA, prepared by TRC Environmental Corporation, not dated, comprised of:
    - Photograph No. 1a, titled *"Lawrence, Massachusetts U.S. Geological Survey*.
    - Photograph No.:1b, titled *"Lawrence, Massachusetts U.S. Geological Survey (Zoomed In)"*.
    - Photograph No.:2a, titled *"Aerial Photo A-4-D 1-88 – 1938"*.
    - Photograph No.:2b, titled *"Aerial Photo A-4-D 1-88 (Zoomed In) – 1938"*.
    - Photograph No.:3, titled *"Aerial Photo – circa 1990"*.
    - Photograph No.:4, titled *"Aerial Photo – circa 2008/2009"*.
    - Photograph No.:5, titled *"Aerial Photo – 2021"*
- Attachment B – TEC 75% Design Plans, consisting of two (2) plan sheets.

This information is available in alternate format. Please contact Melixza Esenyie at 617-626-1282.
TTY# MassRelay Service 1-800-439-2370
MassDEP Website: www.mass.gov/dep

Printed on Recycled Paper

Minor Project Modification to Ch.75 Acts of 1846
Lawrence Rail Trail Project, Merrimack St Railroad Right-of-Way
Merrimack River, Lawrence, Essex County

As stipulated in the letter and supporting information, the proposed scope of work includes the conversion of the existing railroad bridge and ballast to an alternative transportation corridor within the existing right-of-way. Specifically, the proposed project includes the removal of the existing tracks and associated structures, relocation of utility lines to the downstream section of the existing bridge, installation of a paved multi-use path atop of new precast concrete deck panels, bridge railings and landscaping, and placement of fill for abutment grading, as depicted on plans in Attachment B. The proposed use of the bridge will be for bicycle and pedestrian crossing.

The submittal did not identify any previously issued Waterways License and/or Legislative Act for the existing railroad and associated structures. However, upon Departmental review of legislative records and historic cartographic resources, the Department determined that the construction of the existing railroad bridge was authorized under Chapter 75 of the Legislative Acts of 1846, Page 36.

Based on the collective representations made in the submitted documents and supporting figures and information described above, the Department determines that the proposed work meets the requirements approval as a Minor Project Modification pursuant to 310 CMR 9.22(3)(a) and 310 CMR 9.22(3)(b). Specifically, the proposed work is confined to the existing footprint of the fill or structures being altered and represent an insignificant deviation from the original authorization, in terms of size, configuration, materials, or other relevant design or fabrication parameters, and the change of use will maintain or enhance public benefits provided by the project and represent an insignificant deviation from the original use, in terms of function, character, duration, patronage, or other relevant parameters. Accordingly, no further authorization pursuant to Chapter 91 and the regulations at 310 CMR 9.00 is required.

The Department will retain this correspondence approving the specific scope of work and change in use as identified above, along with the referenced submittal in our records. This Departmental action does not relieve or exempt you of the requirement to obtain all other applicable local, State and Federal authorizations necessary to perform said activities.

If you have any questions, please contact the Waterways Regulation Program at dep.waterways@mass.gov.

Sincerely,

Daniel J. Padien
Program Chief
Waterways Regulation Program

cc: Lawrence Conservation Commission
Holly Palmgren, Massachusetts Bay Transportation Authority
Corrina Beckwith, Massachusetts Department of Transportation

DOCUMENT A00869

NOAA FISHERIES – SECTION 7
No-Effect Determination

THIS PAGE IS INTENTIONALLY LEFT BLANK

650 Suffolk St., Suite 200
Lowell, MA 01854
T 978.970.5600
TRCcompanies.com

December 11, 2023

NOAA Fisheries
Greater Atlantic Regional Fisheries Office
Protected Resources Division
55 Great Republic Drive
Gloucester, MA 01930

Attn: Ms. Jennifer Anderson

Re: Lawrence Manchester Rail Corridor (LMRC) Project located within the former Lawrence Manchester Rail Corridor from Merrimack Street to the Lawrence/Methuen City Line

Dear Ms. Anderson,

We are carrying out the proposed project as described below. We have made the determination that the proposed activity will have "no effect" on any species listed as threatened or endangered and critical habitat by the National Oceanographic and Atmospheric Administration (NOAA) Fisheries under the Endangered Species Act (ESA) of 1973, as amended.

The proposed **Lawrence Manchester Rail Corridor (LMRC) Project** consists of redeveloping 1.40-miles of the inactive Lawrence Manchester Rail Corridor into a shared-use path/alternate transportation corridor (ATC) for pedestrian and bicycle accommodations. The Project area begins at Merrimack Street in Lawrence and extends north to the Lawrence/Methuen City Line (**Attachment A; Figure 1**). The purpose of **LMRC Project** is to provide an alternate transportation route, connecting to the City of Methuen Rail Trail and the regional trail network.

The **LMRC Project** ATC will begin at Merrimack Street in Lawrence, connect to Manchester Street Park and the Spicket River Greenway to the north and terminates at the City of Methuen Rail Trail. The **LMRC Project** includes improving three at-grade intersection crossings and developing additional access points to the City of Methuen Rail Trail from existing developments and parks. The Project is anticipated to start in August 2024 and will take approximately three years to reach substantial completion.

Along the existing Lawrence Manchester Rail Corridor, there are four bridges that will be improved as part of the **LMRC Project** including:

- deck replacements at bridges over the South Canal and the Merrimack River;
- complete replacement of the Lowell Street Bridge; and
- superstructure replacement at the Manchester Street Bridge Crossing.

This letter of "no effect" determination pertains to the proposed work on the bridges that span over the South Canal and the Merrimack River. The **LMRC Project** Action Area includes waterway portions which lie beneath the bridges spanning over the South Canal and the Merrimack River and downstream of the Essex Dam (**Attachment A; Figure 2)**.

Project Description

The South Canal is situated parallel along the Merrimack River, juxtaposed between Merrimack Street and landform bordering the mainstem of the Merrimack River (**Attachment A; Figure 2**).

The South Canal terminates at the highly developed industrial complex west of Union Street. Merrimack River runs 126.8 miles in total, flowing from both the Pemigewasset and Winnipesaukee Rivers to the Atlantic Ocean, with approximately 49 miles of the river within Massachusetts. The Merrimack River is classified in the fifth stream order with an average pH of 6.6 (Brady et al., 2005). The first obstruction to the Merrimack River is the Essex Dam located in Lawrence, Massachusetts at river mile 28.8. The Essex Dam ranges from 73 to 531 feet away from the Project Area. Built in 1848, the Essex Dam has a spillway width of 920 feet and a spillway height of 31 feet. The Essex Dam has been equipped with fish passage facilities since the mid-19th century with the latest upgrade involved the installation of a fish lift in the 1980s. This fish lift has the capacity to pass 840,000 shad annually and is in good passable condition (Brady et al., 2005).

The existing Lawrence Manchester Rail Corridor has been divided into several sub catchment areas consisting of semipervious railway and vegetated landscaped areas along the shoulders of the railway. The corridor varies in width from 50 to 80 feet and is approximately 1.4 miles long. Utility poles and underground fiber-optic cables run the entire length of the corridor.

The proposed construction includes a 12-foot-wide full depth pavement bike path between the South Canal and Merrimack River bridges and from Water Street to the limits of the City of Methuen. Along most of the central corridor a five-foot-wide full depth pavement walking path is proposed alongside and intersecting with the bike path. Concrete gathering areas, benches, and stadium seating is proposed throughout the trail. The Project will impact four existing bridges along the length of the corridor. One new bridge, a proposed elevated wood ramp, will be added 400 feet northwest of Essex Street and leading up to Lowell Street. The 75 percent design plans describe in detail all proposed construction activities which can be found in **Attachment B.**

The proposed **LMRC Project** has been broken into eight sections, two sections travel over water and the remaining six travel overland, as shown in the following table:

Table 1: LMRC Project Sections

Trail Section	Section Start and End Points	Section Length (Feet)	Over Water or Land
1	Merrimack Street to Merrimack River (includes South Canal)	370	Water/Land
2	Merrimack River to Broadway/Water Street Intersection (includes Merrimack River)	690	Water/Land
3	Water Street to Essex Street Intersection	715	Land
4	Essex Street to Lowell Street	750	Land
5	Lowell Street to Haverhill Street Intersection	775	Land
6	Haverhill Street to Bourgoin Square Park (West Street Park)	1,230	Land
7	Bourgoin Square Park to Manchester Street Intersection	1,150	Land
8	Manchester Street to Methuen City Line	1,400	Land

The following paragraphs provide details of **LMRC Project Sections 1 and 2**, which pertain to the work on the bridges that span over the waterways of the South Canal and the Merrimack River.

The **LMRC Project Section 1** from Merrimack Street to the Merrimack River includes the Merrimack Street sidewalk, a bridge over the South Canal, and a 300-foot stretch of railway towards the Merrimack River. Crossing the South Canal is a 70-foot open deck rail bridge with timber ties. There is a single set of railroad tracks through this section. The shoulders of the railway have a small amount of ground cover, the only vegetation being large trees and bushes.

Proposed changes to the first section, from Merrimack Street to the Merrimack River, include sidewalk repairs, the addition of an Americans with Disabilities Act (ADA) accessible wheelchair ramp, a deck replacement to the South Canal bridge, and the construction of a bike path, concrete seating areas, and landscaped areas. The South Canal bridge deck replacement is proposed to be a cast in place concrete deck bridge. All railroad tracks are proposed to be removed.

The **LMRC Project Section 2** of the corridor consists of the crossing the Merrimack River, the path from the bridge to the sidewalk on Broadway, and the Broadway/Water Street intersection. Crossing the Merrimack River is a 550-foot open deck rail bridge with timber ties. The single set of railroad tracks continues across the bridge. The undeveloped path leading to the Broadway Street sidewalk is 140 feet long. This section is overgrown with vegetation near the bridge and nearly bare or mulched near the sidewalk. The path, sidewalk, and intersection do not follow the original route of the tracks. There are no railroad tracks in this section of the corridor.

Proposed changes to the second section, from Merrimack River to Broadway/Water Street Intersection, will consist of a deck replacement to the Merrimack River bridge, continued construction of the bike path, concrete seating areas, and landscaped areas. The Merrimack River bridge deck replacement is proposed to include isolated steel repairs. All railroad tracks are proposed to be removed.

Construction Description and Mitigation Measures

The Project will be constructed in a single phase under the control and oversight of Massachusetts Department of Transportation (MassDOT) who will provide on-site construction administrative and inspection services during the entire construction duration. The City of Lawrence may retain an environmental monitor to oversee construction activities. Long-term operation and maintenance of the multi-modal recreational trail will be the responsibility of the City of Lawrence.

As described, in the **LMRC Project Section 1** at the South Canal a concrete deck bridge replacement will be a cast in place in the **LMRC Project Section 2**, the Merrimack River bridge deck replacement will include isolated steel repairs. During construction, a protective shielding system will be implemented on and underneath the South Canal bridge and the Merrimack River bridge to protect the waterway below from any potential falling or flying debris during any deck replacement or steel repair work.

Once selected, the assigned contractor will be responsible for designing, furnishing, installing, maintaining, removing, and finally disposing of the protective shielding system. The shielding

system will be installed in-place prior to any bridge work and will be inspected and approved by the City of Lawrence, MassDOT, and the on-site Project engineer prior to commencement of construction.

The overwater bridge work will not involve dredging, pile driving, hydro acoustic impacts, habitat conversion or vessel traffic. There will be no riprap or other material placed on the shoreline or river bottom. Additionally, no turbidity curtains, cofferdams, or time of year restrictions will be employed. Throughout this process, no in-water work is required for the completion of this Project.

Erosion and Sediment Controls

Impacts will be limited to the Project limit of disturbance which is restricted as much as possible to the existing Lawrence Manchester Rail Corridor. Additionally, sediment and erosion controls will be used to prevent off-site impacts during construction and a stormwater management system will be installed to control runoff and prevent off-site impacts after construction. No sediment or erosion will be introduced into the South Canal or the Merrimack River.

Regulatory Background and Correspondence

The Project will not result in any discharges, and therefore will not require any permitting through the National Pollutant Discharge Elimination System (NPDES).

Resultant Project impacts to state jurisdictional resource areas have been reviewed and approved pursuant to the State of Massachusetts Wetlands Protection Act (WPA), by the state regulatory agencies.

The Natural Heritage and Endangered Species Program (NHESP) of the Massachusetts Division of Fisheries & Wildlife (the Division) has identified that this Project area, or portion thereof, is located within Priority Habitat 2154 (PH 2154) and Estimated Habitat 1362 (EH 1362) as indicated in the Massachusetts Natural Heritage Atlas (15th Edition) for the following state-listed rare species that are protected under Massachusetts Endangered Species Act (MESA) (M.G.L. c. 131A) and its implementing regulations (321 CMR 10.00): the shortnose sturgeon (*Acipenser brevirostrum*) and the Atlantic sturgeon (*Acipenser oxyrinchus*) (NHESP Tracking #23-41576). Under the Massachusetts Wetlands Protection Act, MassWildlife determined that the Project will not adversely affect the actual resource area habitats of the state-protected rare wildlife species. Under MESA, MassWildlife determined that the Project will not result in a prohibited "take" of state-listed rare species. **Attachment C** provides the MESA Program response letter pertinent to this Project dated January 5, 2023, and the determination letter dated September 27, 2023.

NOAA Fisheries Listed Species and Critical Habiat in the Action Area

As defined, the Action Area means all areas to be affected directly or indirectly by the federal action and not merely the immediate area involved in the action (50 CFR 402.02). The **LMRC Project** Action Area includes the portions of the South Canal and Merrimack River that lie beneath the South Canal and the Merrimack River bridges.

Based on NOAA's ESA Section 7 Mapper[1], within the Action Area, there are two endangered fish species mapped in the Merrimack River including the shortnose sturgeon (*Acipenser brevirostrum*), the Atlantic sturgeon (*Acipenser oxyrinchus*) and the critical habitat for the Atlantic sturgeon. **Attachment A; Figure 3** identifies the extent of both species and the critical habitat in the Project area.

Shortnose Sturgeon *(Acipenser brevirostrum)*

The general distribution of this amphidromous species is typically in Atlantic Ocean waters and associated bays, estuaries, and coastal river systems from Nova Scotia to Florida. Adults live in marine waters, with some making coastal migrations between river systems. Examples of this include the Penobscot River to the Merrimack River via the Gulf of Maine, the Merrimack River to the Connecticut River via the Gulf of Maine and Long Island Sounds, and the Connecticut River to Hudson River via the Long Island Sound and the East River (NOAA 2023a). Shortnose sturgeon hatch in the freshwater of rivers and spend most of their life in the estuaries of these rivers. The typical distribution of this species is found in rivers and inshore bays from the estuary or river mouth up to the first impassible barrier (i.e., dams or falls) (NOAA 2023a) (Kieffer and Kynard 1996). Within the Merrimack River, the distribution of the shortnose sturgeon spans up to the Essex Dam (NOAA 2022a). The Essex Dam ranges from 73 to 531 feet away from the Project area (**Attachment A; Figure 2**) and is equipped with a fish lift that has the capacity to pass 840,000 shad annually. This fish lift is in good passable condition, and therefore would not be identified as an impassible barrier for the shortnose sturgeon (Brady et al., 2005).

In the rare occasion that the shortnose sturgeon enters marine waters, they generally stay close to shore. This species spawns in the spring, moving far upstream and away from the saltwater. After spawning, these adults move downstream back to the estuaries. Generally, this species can reach up to 4.5 feet in length and live 30 years or more (NOAA 2023a).

There are several life stages present within the Merrimack River: eggs, larvae young-of-year (YOY), juveniles, and adults (NOAA 2022a). The Merrimack River has the smallest population known, in which adult abundance is estimated at only tens of adults (Kieffer and Kynard 1996; Kynard et al. 1997). Shortnose sturgeon in the Merrimack River were never scientifically documented until the studies of Kieffer and Kynard (1993, 1996), as cited in NOAA 2022a, which documented use of river reaches, habitat use, spawning and foraging reaches, and annual migrations. These studies in the 1990s established that all life stages of the species were present, and further, that adults spawned at Haverhill, located upstream of the Project area. Recent studies found Haverhill remains the only spawning site for the species in the river.

Habitats of adults and large juveniles (spawning, foraging, and wintering) in the Merrimack River is well-studied (Kieffer and Kynard 1993, 1996 and Kynard et al. 2000 as cited in NOAA 2022); Habitats used are similar to habitats used by the intensively studied Connecticut River shortnose Sturgeon (Kieffer and Kynard 2012a; Kieffer et al. 2012; Kynard et al. 2012a, b).

Adult (foraging – wintering) – Adults forage over sand, sand-gravel, and sand-mud substrate in the Amesbury reach of the Merrimack River (Kieffer and Kynard 1993 as cited in NOAA 2022a) like they do in the Potomac River (Kynard and Kieffer 2009). Adults spend the winter in deep sandy areas of the Amesbury reach (Kieffer and Kynard 1993 as cited in NOAA 2022a), like adults in the Connecticut River (Kynard and Kieffer 2012c).

[1] ESA Section 7 Mapper (arcgis.com)

Recent tracking of adults found reaches used for foraging and wintering (at Amesbury) has not changed (NOAA 2022a; Kynard and Kieffer 2009). This is important because “river reach” is critically important to shortnose sturgeon spawning, with adults bypassing suitable habitat in one river reach and homing to spawn in another river reach.

Adult (spawning) – Monitoring spawning for 17 years by Connecticut River adults found all spawning occurred in a photoperiod window between 27 April and 22 May. Within this photoperiod window, fish spawned early in warm temperatures and later in colder temperatures.

Within a few days after spawning, post-spawned adults depart Haverhill (Kieffer and Kynard 1996; NOAA 2022a). The same behavior was observed for post-spawned Connecticut River adults (Kieffer and Kynard 2012a). Many post-spawned Merrimack River adults swim to the freshwater: saltwater zone to forage typically for several weeks, and then, return to the Amesbury reach to forage (NOAA 2022a).

Juvenile – Juveniles habitat for growth to maturity is the mixed sandy bottom Amesbury reach downstream of Haverhill (NOAA 2022a). They are known to have increasing salinity tolerance with age and typically have the same habitat patterns as adults (NOAA 2019a).

Larva – Larvae are briefly present in the Merrimack River as they develop from free embryos into larvae, the first foraging life stage (Kynard and Horgan 2002). Larvae forage on zooplankton and drifting macro-invertebrates (Bath et al. 1981) most likely produced in the reservoirs upstream of Haverhill. Since drifting forage is mainly coming from upstream of the Project area and there will be no in-water work for this Project, there will be no substrate changes from any Project activities. Therefore, the Project will have no effect on the quick period larvae forage before departing from the spawning site.

Egg - Eggs are present at spawning sites in the Project area for their entire lives (Kynard and Horgan 2002; Kynard et al. 2010). There will be no disturbance of spawning substrate because the Project does not require any in-water work and therefore will not impact this life stage.

Atlantic Sturgeon *(Acipenser oxyrinchus)*

The general distribution of the Atlantic sturgeon is in Atlantic Ocean waters and associated bays, estuaries, and coastal water systems from Canada to Florida (NOAA 2022b). This species hatches in the freshwater of rivers, and then enter marine waters for subadult and adult life stages before they head back to where they hatched to spawn and lay eggs. Similar to shortnose sturgeon, the typical distribution of this species is found in rivers and inshore bays from the estuary or river mouth up to the first impassible barrier (i.e., dams or falls) (NOAA 2022b) (Kieffer and Kynard 1996 as cited in NOAA 2022b). Within the Merrimack River, the distribution of the Atlantic sturgeon spans to the Essex Dam and is often found around the lower islands reach and the mouth of the river (NOAA 2022b). The Essex Dam ranges from 73 to 531 feet away from the Project area (Attachment B; Figure 2) and is equipped with a fish lift that has the capacity to pass 840,000 shad annually. This fish lift is in good passable condition, and therefore would not be identified as an impassible barrier for the Atlantic sturgeon (Brady et al., 2005).

Atlantic sturgeon can reach up to 14 feet in length and up to 60 years in age (NOAA 2023b). This species utilizes the deepest of habitats in rivers, but are also found in shallow, tidally influenced flats and substrates including mud, sand, rubble, and cobble (NOAA 2022b).

The life stages present within the Merrimack River include: subadults and adults with the possibility of eggs, larvae, YOY and juveniles. Spawning potentially occurs within the Merrimack River due to the presence of features necessary to support recruitment and reproduction (NOAA 2022b). An estimated tens to hundreds of coastal-migrant juveniles natal to other rivers annually enter the lower reach of the Merrimack River and forage in the freshwater: saline interface in the mainstem river at Amesbury - Salisbury, MA (Kieffer and Kynard 1993 as cited in NOAA 2022b). This river reach is the upper reach of the estuary (Jerome et al. 1965). During several years, a rare juvenile was tracked migrating upstream as far as Haverhill. This tracked juvenile remained only a few days in freshwater before returning downstream to the saltwater-freshwater interface reach (Kieffer and Kynard 1993 as cited in NOAA 2022b).

Adult – Foraging typically occurs at the mouth of the river and the lower islands area (RKM 0-12) (NOAA 2022b). Historically, adult Atlantic sturgeon did not spawn in the river downstream of Lawrence, but they migrated far upstream to spawn (Kieffer and Kynard 1996 as cited in NOAA 2022b). There is a possibility for spawning to occur in the Merrimack River due to the presence of features necessary to support reproduction and recruitment (NOAA 2022b). While it is possible, it is unlikely that spawning would occur within the Project area.

Subadults – Migrating and foraging subadults may enter the lower estuary and utilize areas from the river mouth to the upstream limit of tidal effect. Foraging would occur at the mouth of the river, particularly in areas with softer substrate, using river kilometer (RKM) 7-12 (NOAA 2022b).

Juveniles – After the first year, juveniles become increasingly tolerant to saline water and utilize the full extent of the river to forage in areas with soft substrate (NOAA 2019b). Data suggests that the Merrimack River is used as a nursery area for juveniles (NMFS NOAA 2007).

YOY - YOY individuals are not tolerant to salinity and remain above the salt front. Rearing, migrating, and foraging for YOY requires continuous flow in main river channels absent of physical barriers (NOAA 2019b). Areas close to dams, reservoirs, or locks will not allow passage between the salt front and spawning sites to support YOY movement. The Essex Dam, however, is equipped with a fish lift that has the capacity to pass 840,000 shad annually (Brady et al., 2005). This fish lift is in good passable condition and should allow passage for YOY individuals. While the Essex Dam provides passage for these individuals to spawn, there will be no in-water work required for this Project and therefore will have no effect on this life stage.

Larvae – Within a few days after development into larvae, this life stage disperses downstream from the spawning site (Kynard and Horgan 2002). They will migrate downstream but stop dispersal upstream of salinity because they have low tolerance to salt. In the Merrimack River, this rearing zone would likely be in the Amesbury reach. Habitat use by larvae of dispersing shortnose, and larvae of other sturgeons is in the lower meter or so of the water column during downstream movement. Larvae stop and use the bottom to briefly forage (Kynard and Horgan 2002; Kynard et al. 2013). Observations on foraging larvae in artificial streams found migrants foraged on sand to boulders during migration, suggesting many substrate sizes are acceptable to wild foraging migrant larvae.

Free Embryo & Egg – These life stage would rear at the spawning site, which would likely be upstream from the Project area and will not be present.

Critical Habitat for Atlantic Sturgeon *(Acipenser oxyrinchus)*

The Merrimack River (Unit 5) has been identified as a critical habitat for the Atlantic sturgeon by the National Oceanic and Atmospheric Administration (NOAA) Fisheries (**Attachment A; Figure 4**) (NOAA 2022c) (82 FR 39160). Opposingly, the Merrimack River is not a critical habitat for the shortnose sturgeon. According to NOAA, critical habitat is defined as "specific areas within the geographical area occupied by the species at the time of listing that contain physical or biological features essential to conservation of the species and that may require special management considerations or protection; and specific areas outside the geographical area occupied by the species if the agency determines that the area itself is essential for conservation" (NOAA 2022c).

The Merrimack River was identified as a critical habitat for the Atlantic sturgeon in order to protect and provide special management considerations for certain physical features (82 FR 39160). These physical features include hard bottom substrate in low salinity waters, Aquatic habitat with a gradual downstream salinity gradient of 0.5 up to as high as 30 parts per thousand (ppt), appropriate water depth and absent physical barriers. These areas are necessary to support the Atlantic sturgeons' settlement, physiological development, and passage between the river mouth and spawning sites.

While the Project area is located within this critical habitat, there will be no in-water work required for this Project, therefore, Project activities will not impact or disturb this species or its critical habitat.

Effects Determination and Conclusions

In order to determine that the Project will have no-effect on the listed species, shortnose sturgeon and Atlantic sturgeon, and the critical habitat within the Project area, a series of stressors relevant to the Project activities must be addressed (NOAA 2023c).

The shortnose sturgeon and the Atlantic sturgeon will not be impacted by Project activities because there will be no in-water work. Therefore, there will be no effects to these species involving sound pollution, habitat structure and disturbance, dredging, water quality, prey quantity and quality, vessels, and in-water structures.

The critical habitat for the Atlantic sturgeon will not be impacted by Project activities because there will be no in-water work. Therefore, there will be no effects to this critical habitat involving sound pollution, habitat structure and disturbance, dredging, water quality, in-water structures including aquaculture, prey quantity and quality, and the alteration native fish composition.

Based on the absence of in water work, proposed mitigation measures, lack of stressors on either listed species and the absence of impacts on critical habitat present within the Project Action Area, it is appropriate to make a "no effect" determination for this Project.

References

Bath, D. W., O'Connor, J. M., J. B. Alber, and L. G. Arvidson. 1981. Development and identification of larval Atlantic sturgeon (*Acipenser oxyrhynchus*) and shortnose sturgeon (*A. brevirostrum*) from the Hudson River estuary, New York. Copeia 1981, 711−717.

Brady, P.D., Reback, K.E., McLaughlin, K.D., & Milliken, C.G. 2005. A Survey of Anadromous Fish Passage in Coastal Massachusetts Part 4. Boston Harbor, North Shore and Merrimack River. Technical Report TR-18. Massachusetts Division of Marine Fisheries (DMF): Southshore Field Station. Pocasset, MA. https://www.mass.gov/doc/introduction-10/download. Accessed February 2023.

Carlson, D.M., and K.W. Simpson. 1987. Gut contents of juvenile shortnose sturgeon in the upper Hudson estuary. Copeia 1987:796-802

Dadswell, M. J.; Taubert, B. D.; Squiers, T. S.; Marchett, D.; Buckley, J. 1984: Synopsis of biological data on shortnose sturgeon, *Acipenser brevirostrum* LeSueur 1818. FAO Fish. Synop. 140, 1−45.

Kieffer, M. C. and B. Kynard. 1993. Annual movements of shortnose and Atlantic sturgeon in the lower Merrimack River, Massachusetts. Trans. Amer. Fish. Soc. 22: 378–386.

Kieffer, M. C., and B. Kynard. 1996. Spawning of the Shortnose Sturgeon in the Merrimack River, Massachusetts. Trans. Amer. Fish. Soc. 125:179–186. Accessed February 2023

Kieffer, M. C. and B. Kynard. 2012a. Spawning and non-spawning migrations, spawning, and the effect of river regulation on spawning success of Connecticut River Shortnose Sturgeon.World Sturgeon Cons. Soc. Spec. Publ. 4, pp. 73-113.

Kieffer, M. C., Kynard, B., and D. Seibel. 2012. Foraging and wintering ranges and the effect of tidal and diel cycles on movement of Shortnose Sturgeon with a note on sub-adult Atlantic Sturgeon. World Sturgeon Cons. Soc. Spec. Publ. 4, pp. 115-127.

Kynard, B. 1997. Life history, latitudinal gradients, and conservation of Shortnose Sturgeon *Acipenser brevirostrum*. Environ. Biol. Fish. 48: 319–334.

Kynard, B., M. Horgan, M. Kieffer, and D. Seibel. 2000. Habitats used by shortnose sturgeon in two Massachusetts Rivers, with notes on estuarine Atlantic sturgeon: a hierarchical analysis. Trans. Amer. Fish, Soc. 129: 487-503

Kynard, B. and M. Horgan. 2003. Attraction of pre-spawning male shortnose sturgeon, *Acipenser brevirostrum*, to the odor of pre-spawning females. J Ichthyol. 42: 205-2

Kynard, B. and M. Kieffer. 2009. Shortnose sturgeon in the Merrimack River: status after 20 years. Prog. Rept. to NMFS Reg. Off., Gloucester, MA. pp. 14.

Kynard, B. D. Pugh, T. Parker, and M. Kieffer. 2010. Using a semi-natural stream to produce young sturgeons for conservation stocking: maintaining natural selection during spawning and rearing. J. Appl. Ichthyol. 27: 420-424.

Kynard, B. M. Kieffer, M. Burlingame, P. Vinogradov, and B. E. Kynard. 2012a: Adult movements, demography, and spawning success of Connecticut River Shortnose Sturgeon at Holyoke Dam. World Sturgeon Cons. Soc. Spec. Publ. 4, pp. 51-72.

Kynard, B., M. Kieffer, M. Horgan, M. Burlingame, P. Vinogradov, and B. E. Kynard. 2012b. Up- and downstream migrations and population structure of Connecticut River Shortnose Sturgeon: effects of Holyoke Dam. World Sturgeon Cons. Soc. Spec. Publ. No. 4, pp. 1-49.

Kynard, B., D. Pugh, T. Parker, M. Kieffer. 2012c. Spawning of Connecticut River Shortnose Sturgeon in an artificial stream: Adult behaviour and early life history. World Sturgeon Cons. Soc. Spec. Publ. 4, pp. 165-195.

NMFS NOAA. 2007. Status Review of the Atlantic Sturgeon (*Acipenser oxyrinchus oxyrinchus)* Prepared by the Atlantic Sturgeon Status Review Team. National Marine Fisheries Service National Oceanic and Atmospheric Administration. https://www.nrc.gov/docs/ML0901/ML090120040.pdf. Accessed February 2023.

NMFS NOAA. 2010. Biological Assessment of Shortnose Sturgeon *Acipenser brevirostrum* Prepared by the Shortnose Sturgeon Status Review Team. National Marine Fisheries Service National Oceanic and Atmospheric Administration. https://repository.library.noaa.gov/view/noaa/17811. Accessed February 2023.

NOAA. 2019a. Shortnose Sturgeon – General Life Stage/Behavior Descriptions. https://media.fisheries.noaa.gov/dammigration/sns_life_stage_behavior_descriptions_20191029_508.pdf. Accessed February 2023.

NOAA. 2019b. Atlantic Sturgeon – General Life Stage/Behavior Descriptions. https://media.fisheries.noaa.gov/dammigration/ans_life_stage_behavior_descriptions_20191029_508.pdf Accessed February 2023.

NOAA. 2022a. Section 7 Species Presence Table: Shortnose Sturgeon in the Greater Atlantic Region. Greater Atlantic Regional Fisheries Office. https://www.fisheries.noaa.gov/new-england-mid-atlantic/consultations/section-7-species-presence-table-shortnose-sturgeon-greater. Accessed February 2023.

NOAA. 2022b. Section 7 Species Presence Table: Atlantic Sturgeon in the Greater Atlantic Region. Greater Atlantic Regional Fisheries Office. https://www.fisheries.noaa.gov/new-england-mid-atlantic/consultations/section-7-species-presence-table-atlantic-sturgeon-greater. Accessed February 2023.

NOAA. 2022c. Atlantic Sturgeon Critical Habitat Map and GIS Data. https://www.fisheries.noaa.gov/resource/map/atlantic-sturgeon-critical-habitat-map-and-gis-data. Accessed February 2023.

NOAA. 2022d. The Greater Atlantic Region ESA Section 7 Mapper. Last Updated August 2022. NOAA
Fisheries. https://www.fisheries.noaa.gov/resource/map/greater-atlantic-region-esa-section-7-mapper. Accessed February 2023.

NOAA. 2023a. Species Directory: Shortnose Sturgeon. https://www.fisheries.noaa.gov/species/shortnose-sturgeon. Accessed February 2023.

NOAA. 2023b. Species Directory: Atlantic Sturgeon. https://www.fisheries.noaa.gov/species/atlantic-sturgeon. Accessed February 2023.

NOAA. 2023c. Section 7: No Effect Determinations in the Greater Atlantic Region. https://www.fisheries.noaa.gov/new-england-mid-atlantic/consultations/section-7-no-effect-determinations-greater-atlantic-region#:~:text=If%20you%20determine%20that%20the%20action%20has%20no,STRESSORS%20are%20relevant%20to%20the%20action%20under%20consideration. Accessed February 2023.

Attachment A: Figures

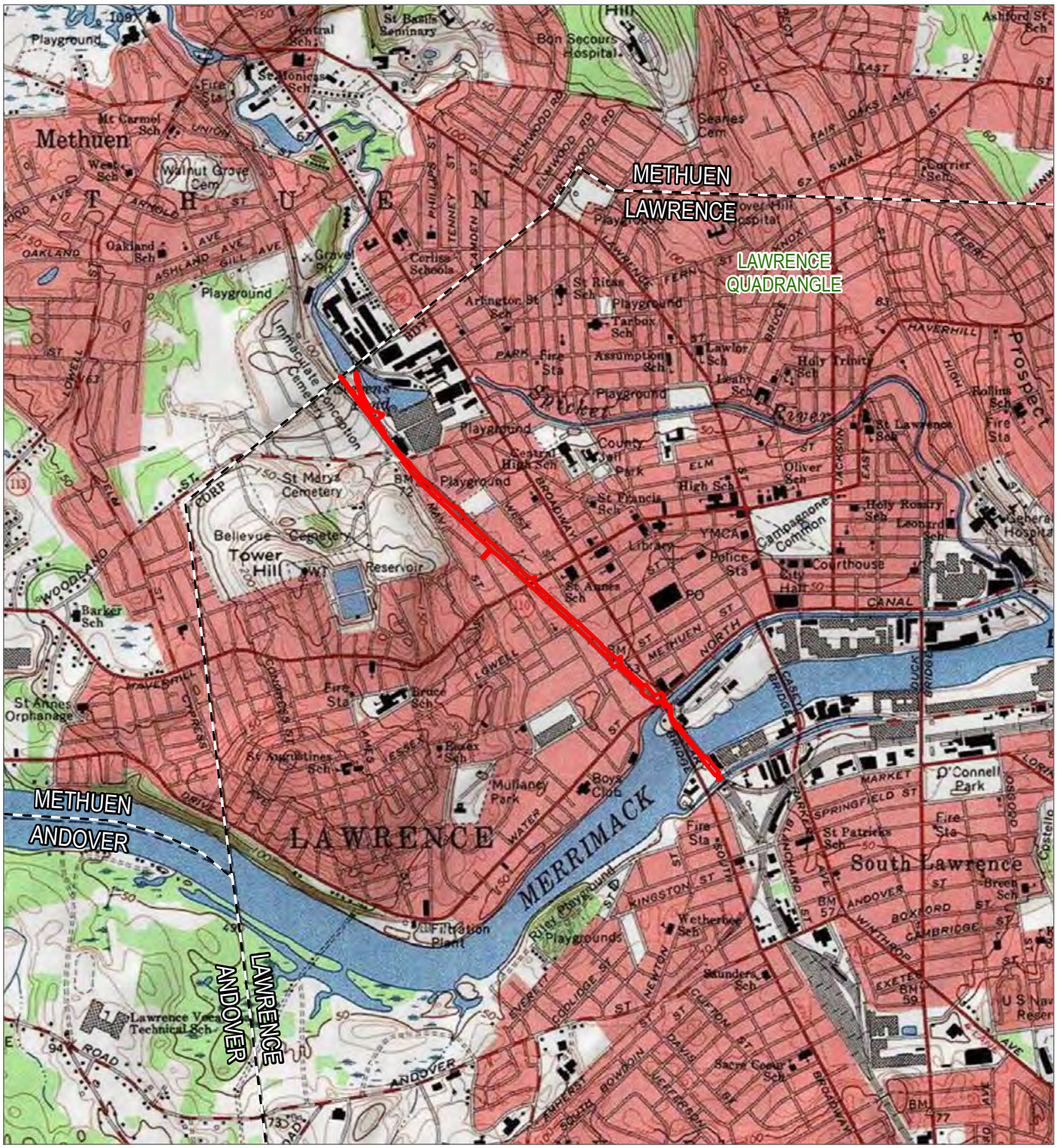

PROJECT AREA

MUNICIPAL BOUNDARY

0 1,000 2,000

FEET

1:24,000 1" = 2,000'

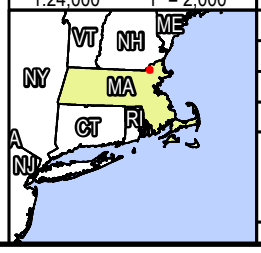

BASE MAP: USA TOPOGRAPHIC MAP, ESRI
DATA SOURCES: TRC

PROJECT:
LAWRENCE RAIL TRAIL

TITLE:
SITE LOCATION MAP
LAWRENCE, MA

DRAWN BY:	S. MOTURI	PROJ. NO.:	274047.0000.0000
CHECKED BY:	R. SPRING		
APPROVED BY:	C. MARTIN		**FIGURE 1**
DATE:	FEBRUARY 2023		

TRC

650 SUFFOLK ST,
WANNALANCIT MILLS,
LOWELL, MA 01854

FILE: LawrenceRailTrail

Coordinate System: NAD 1983 StatePlane Massachusetts Mainland FIPS 2001 Feet: Map Rotation: 0
-- Saved By: SMOTURI on 2/16/2023, 15:32:45 PM: File Path: T:\1-PROJECTS\LMRC\274047_LawrenceRailTrail_MA\2-APRX\LawrenceRailTrail.aprx: Layout Name: Fig1_Site_Location_USGS_8_5x11P

PROJECT AREA

MUNICIPAL BOUNDARY

ESSEX DAM

DIRECTION OF FLOW

N

0 1,000 2,000

FEET

1:24,000 1" = 2,000'

BASE MAP: MASSGIS ORTHOIMAGERY, 2021
DATA SOURCES: TRC

PROJECT:

LAWRENCE RAIL TRAIL

TITLE:

AERIAL MAP

LAWRENCE, MA

DRAWN BY:	S. MOTURI	PROJ. NO.:	274047.0000.0000
CHECKED BY:	R. SPRING		
APPROVED BY:	C. MARTIN		FIGURE 2
DATE:	DECEMBER 2023		

TRC

650 SUFFOLK ST,
WANNALANCIT MILLS,
LOWELL, MA 01854

FILE: LawrenceRailTrail

Coordinate System: NAD 1983 StatePlane Massachusetts Mainland FIPS 2001 Feet Map Rotation: 0
-- Saved By: SMOTURI on 12/7/2023, 16:08:05 PM -- File Path: T:\1-PROJECTS\MRC\274047 LawrenceRailTrail_MA\2-APRX\LawrenceRailTrail.aprx -- Layout Name: Fig2_Aerial_8_5x11P

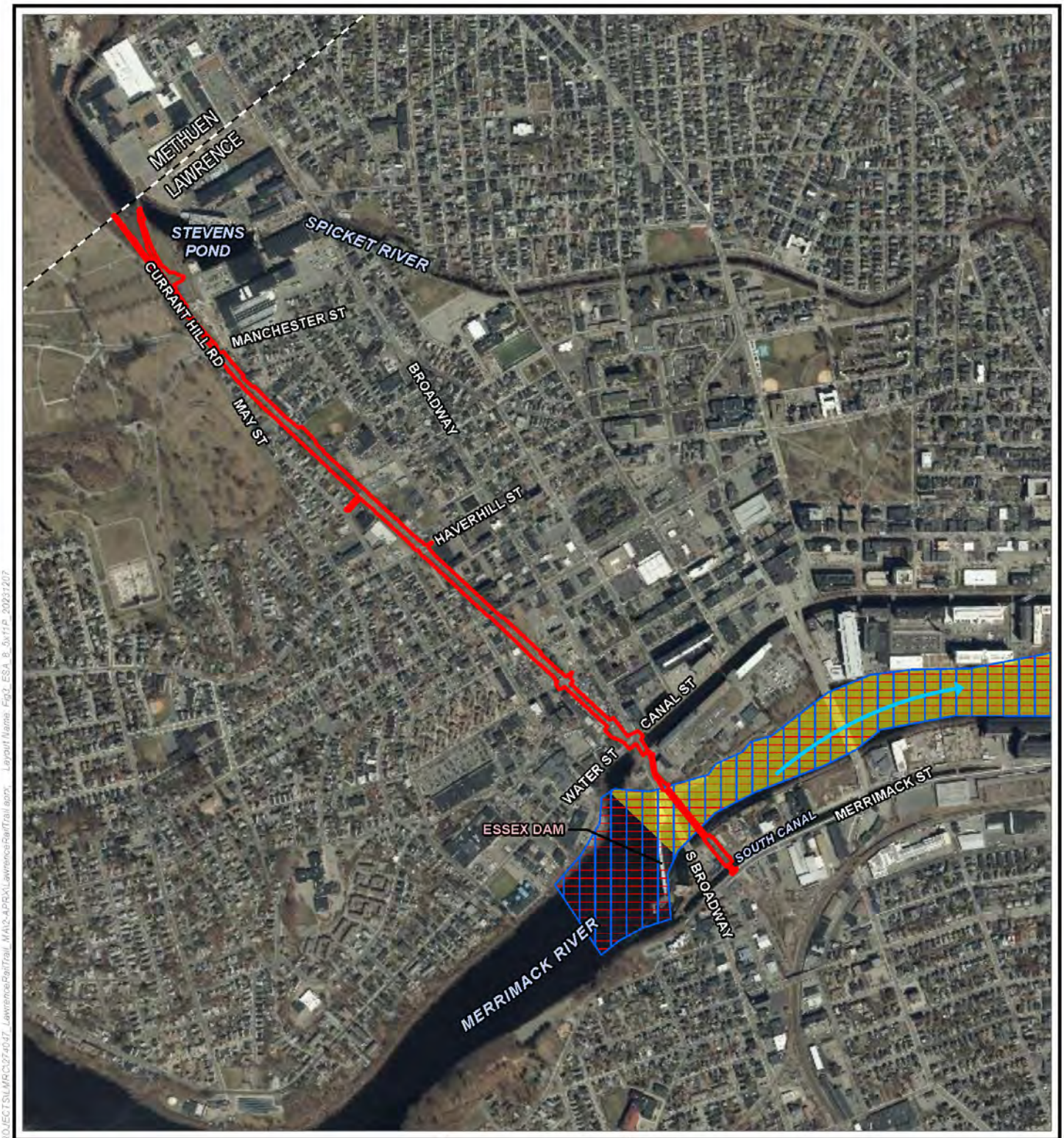

PROJECT AREA
MUNICIPAL BOUNDARY
ATLANTIC STURGEON
SHORTNOSE STURGEON
IN OR NEAR CRITICAL HABITAT
DIRECTION OF FLOW

BASE MAP: MASSGIS ORTHOIMAGERY, 2021
DATA SOURCES: NOAA, TRC

N

0 600 1,200
FEET
1:14,400 1" = 1,200'

PROJECT:
LAWRENCE RAIL TRAIL

TITLE: ESA LISTED SPECIES AND CRITICAL HABITAT IN THE PROJECT AREA
LAWRENCE, MA

DRAWN BY:	S. MOTURI	PROJ. NO.:	274047.0000.0000
CHECKED BY:	R. SPRING		
APPROVED BY:	C. MARTIN		FIGURE 3
DATE:	DECEMBER 2023		

TRC
650 SUFFOLK ST,
WANNALANCIT MILLS,
LOWELL, MA 01854

FILE: LawrenceRailTrail

Coordinate System: NAD 1983 StatePlane Massachusetts Mainland FIPS 2001 Feet Map Rotation: 0
-- Saved By: SMOTURI on 12/7/2023, 14:27:12 PM -- File Path: T:\1-PROJECTS\MRC\274047 LawrenceRailTrail_MA\2-APRX\LawrenceRailTrail.aprx -- Layout Name: Fig2_ESA_8_5x11-P_20231207

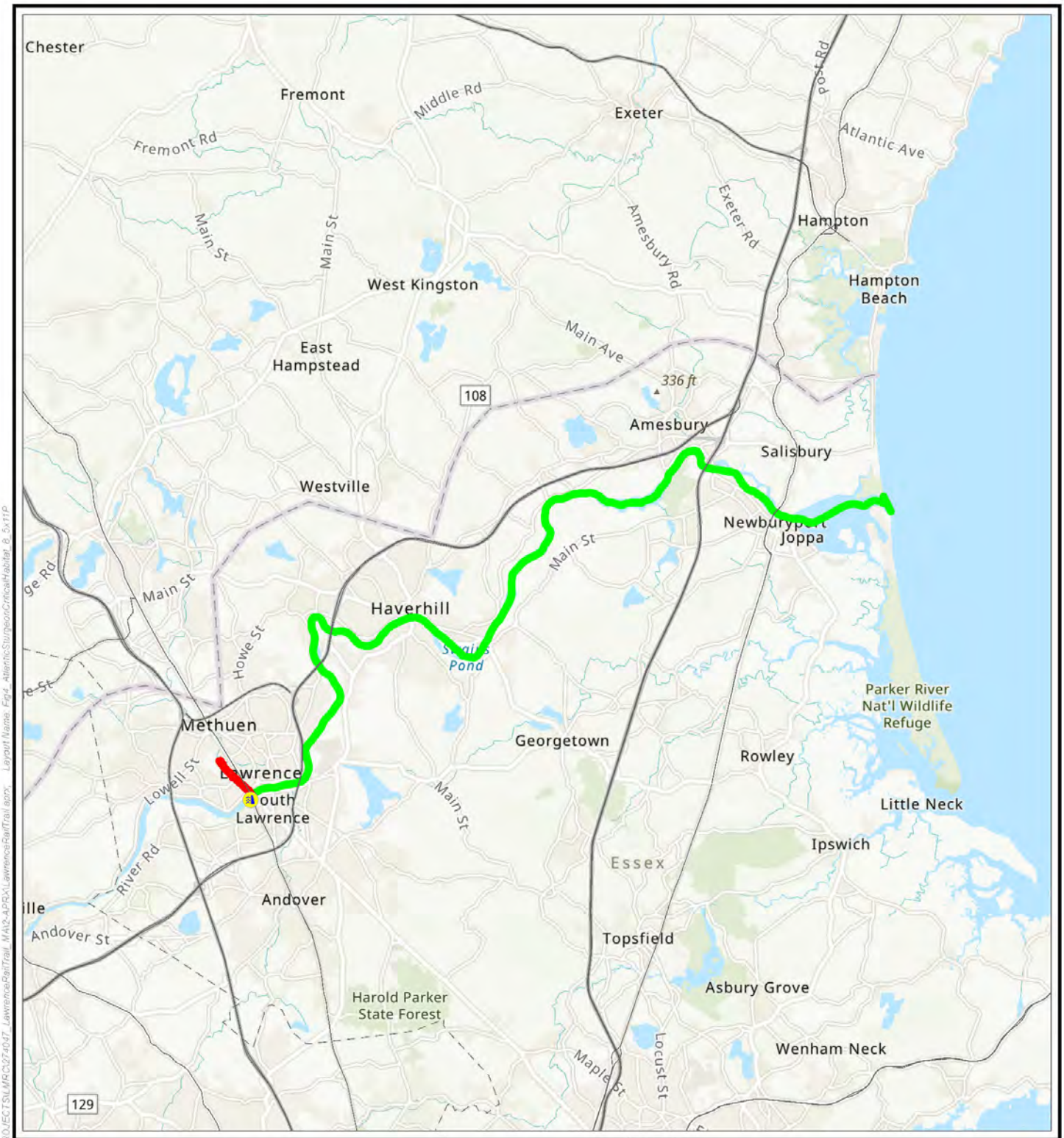

PROJECT AREA

STURGEON, ATLANTIC (ATLANTIC SUBSPECIES)[GULF OF MAINE DPS]

ESSEX DAM

BASE MAP: USA TOPOGRAPHIC MAP, ESRI
DATA SOURCES: NOAA, TRC

0 2 4
MILES
1:253,440 1" = 4 MI

PROJECT:
LAWRENCE RAIL TRAIL

TITLE:
ATLANTIC STURGEON CRITICAL HABITAT
LAWRENCE, MA

DRAWN BY:	S. MOTURI	PROJ. NO.:	274047.0000.0000
CHECKED BY:	R. SPRING		
APPROVED BY:	C. MARTIN		FIGURE 4
DATE:	DECEMBER 2023		

TRC

650 SUFFOLK ST,
WANNALANCIT MILLS,
LOWELL, MA 01854

FILE: LawrenceRailTrail

Coordinate System: NAD 1983 StatePlane Massachusetts Mainland FIPS 2001 Feet, Map Rotation: 0
Saved By: SMOTURI on 12/7/2023, 16:08:05 PM, File Path: T:\1-PROJECTS\MRC\274047_LawrenceRailTrail_MA\2-APRX\LawrenceRailTrail.aprx, Layout Name: Fig4_AtlanticSturgeonCriticalHabitat_8_5x11P

Attachment B: 75% Design Plans

MASSACHUSETTS DEPARTMENT OF TRANSPORTATION
HIGHWAY DIVISION

LAWRENCE
LMRC RAIL TRAIL

STATE	FED. AID PROJ. NO.	SHEET NO.	TOTAL SHEETS
MA	-	1	225
PROJECT FILE NO.	608930		

TITLE SHEET & INDEX

PLAN AND PROFILE OF

LAWRENCE MANCHESTER RAIL CORRIDOR (LMRC) RAIL TRAIL

IN THE CITY OF

LAWRENCE

ESSEX COUNTY

FEDERAL AID PROJECT NO.

75% SUBMITTAL

THESE PLANS ARE SUPPLEMENTED BY THE OCTOBER 2017 CONSTRUCTION STANDARD DETAILS, THE 2015 OVERHEAD SIGNAL STRUCTURE AND FOUNDATION STANDARD DRAWINGS, MASSDOT TRAFFIC MANAGEMENT PLANS AND DETAIL DRAWINGS, THE 1990 STANDARD DRAWINGS FOR SIGNS AND SUPPORTS, THE 1968 STANDARD DRAWINGS FOR TRAFFIC SIGNALS AND HIGHWAY LIGHTING, AND THE LATEST EDITION OF THE AMERICAN STANDARD FOR NURSERY STOCK.

INDEX

SHEET NO.	DESCRIPTION
1	TITLE SHEET & INDEX
2	LEGEND & ABBREVIATIONS
3	KEY PLAN
4-5	TYPICAL SECTIONS & PAVEMENT NOTES
6-20	CONSTRUCTION PLANS
21-25	PROFILES
26-40	CURB TIE & GRADING PLANS
41-47	TRAFFIC SIGN & PAVEMENT MARKING PLANS
48	TRAFFIC SIGN SUMMARY
49-52	TRAFFIC SIGNAL PLANS
53-56	TEMPORARY TRAFFIC CONTROL PLANS
57-71	UTILITY PLANS
72-86	LIGHTING PLANS
87-90	LIGHTING DETAILS
91-123	LANDSCAPE PLANS & DETAILS
124-130	CONSTRUCTION DETAILS
131-137	BRIDGE PLANS - L-04-030
138-149	BRIDGE PLANS - L-04-032
150-155	BRIDGE PLANS - L-04-045
156-160	BRIDGE PLANS - L-04-XXX
161-225	CROSS SECTIONS

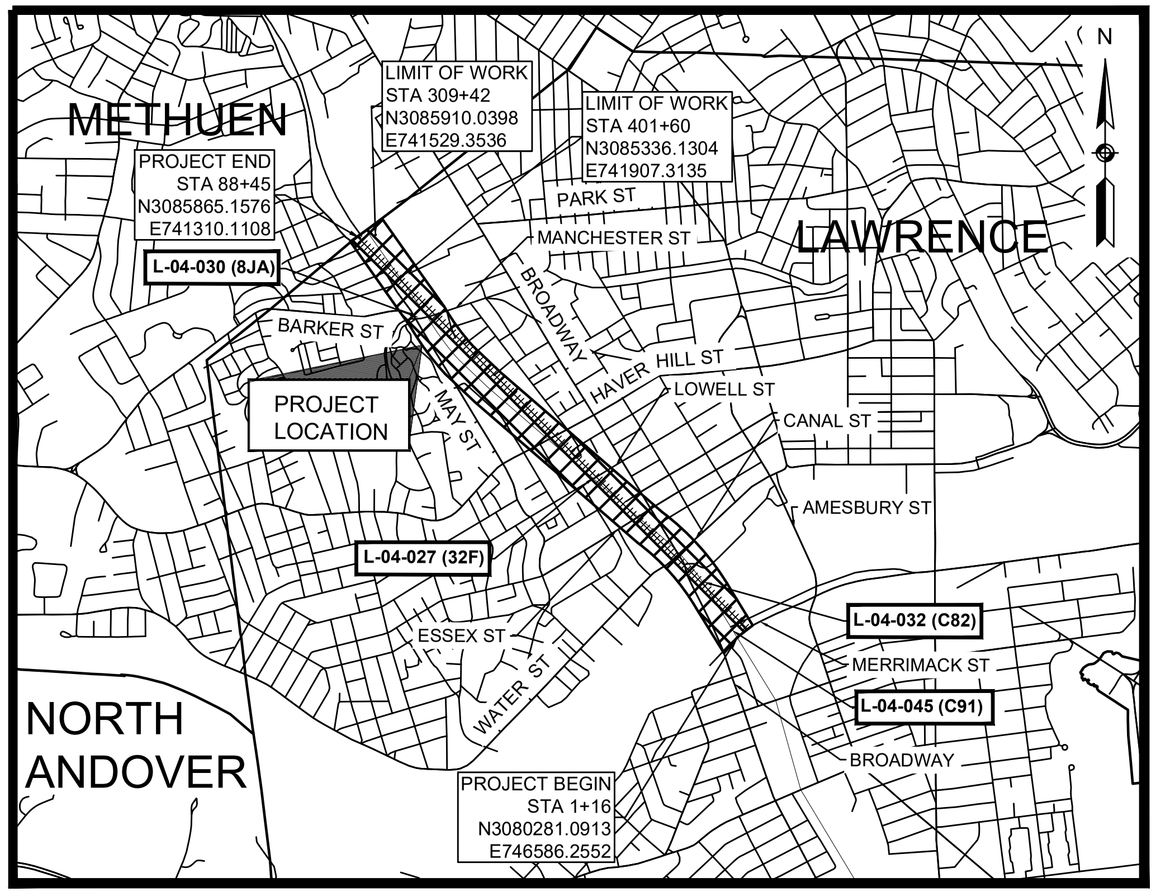

LENGTH OF PROJECT = 7,900 FEET = 1.496 MILES

COMMONWEALTH OF MASSACHUSETTS
LAUREN E NICHOLSON
CIVIL
No. 56061
REGISTERED PROFESSIONAL ENGINEER
12/1/2022

DATE	DESCRIPTION	REV #
10/28/2022	75% SUBMITTAL	1
2/19/2021	25% SUBMITTAL	-

TEC
The Engineering Corp

282 Merrimack Street, 2nd Floor, Lawrence, MA 01843, 978-794-1792
311 Main Street, 2nd Floor, Worcester, MA 01608, 508-868-5104
169 Ocean Blvd, Unit 3, PO Box 249, Hampton, NH 03842, 603-601-8154

www.TheEngineeringCorp.com

MassDOT
Massachusetts Department of Transportation
Highway Division

APPROVED

CHIEF ENGINEER **DATE**

FOR PERMITTING PURPOSES - NOT FOR CONSTRUCTION

608930_HDI\(TITLE SHEET).DWG Plotted on 28-Oct-2022 4:06 PM
Proposal No. 608930-128034
A008869 - 20

GENERAL SYMBOLS

EXISTING	PROPOSED	DESCRIPTION
JB	JB	JERSEY BARRIER
CB	CB/GI	CATCH BASIN OR GUTTER INLET
	CBCI/GICI	CATCH BASIN OR GUTTER INLET W/ CURB INLET
FP	FP	FLAG POLE
GP	GP	GAS PUMP
MB	MB	MAIL BOX
		POST SQUARE
		POST CIRCULAR
WELL	WELL	WELL
EHH	EHH	ELECTRIC HANDHOLE
		FENCE GATE POST
GG	GG	GAS GATE
BHL #	BHL #	BORING HOLE
MW #	MW #	MONITORING WELL
TP #	TP #	TEST PIT
		HYDRANT
		LIGHT POLE
CO.BD.		COUNTY BOUND
		GPS POINT
		CABLE MANHOLE
		DRAINAGE MANHOLE
		ELECTRIC MANHOLE
		GAS MANHOLE
		MISC MANHOLE
		SEWER MANHOLE
		TELEPHONE MANHOLE
		WATER MANHOLE
MHB	MHB	MASSACHUSETTS HIGHWAY BOUND
MON		MONUMENT
SB		STONE BOUND
TB		TOWN OR CITY BOUND
		TRAVERSE OR TRIANGULATION STATION
TPL or GUY	TPL or GUY	TROLLEY POLE OR GUY POLE
HTP		TRANSMISSION POLE
UFB	UFB	UTILITY POLE W/ FIREBOX
UPDL	UPDL	UTILITY POLE WITH DOUBLE LIGHT
ULT	ULT	UTILITY POLE W / 1 LIGHT
UPL	UPL	UTILITY POLE
		BUSH
SIZE & TYPE		TREE
		STUMP
		SWAMP / MARSH
WG	WG	WATER GATE
WSO	WSO	WATER SHUTOFF/CURB STOP
PM	PM	PARKING METER
		OVERHEAD CABLE/WIRE
		CURBING
100 99		CONTOURS (ON-THE-GROUND SURVEY DATA)
100 99		CONTOURS (PHOTOGRAMMETRIC DATA)
		UNDERGROUND DRAIN PIPE (DOUBLE LINE 24 INCH AND OVER)
		UNDERGROUND ELECTRIC DUCT (DOUBLE LINE 24 INCH AND OVER)
		UNDERGROUND GAS MAIN (DOUBLE LINE 24 INCH AND OVER)
		UNDERGROUND SEWER MAIN (DOUBLE LINE 24 INCH AND OVER)
		UNDERGROUND TELEPHONE DUCT (DOUBLE LINE 24 INCH AND OVER)
		UNDERGROUND WATER MAIN (DOUBLE LINE 24 INCH AND OVER)
		BALANCED STONE WALL
		GUARD RAIL - STEEL POSTS
		GUARD RAIL - WOOD POSTS
x	x	CHAIN LINK OR METAL FENCE
		WOOD FENCE
		SEDIMENT CONTROL BARRIER
		COIR LOG
		TREE LINE
		EDGE OF PAVEMENT
		SAWCUT LINE
		TOP OR BOTTOM OF SLOPE
		LIMIT OF EDGE OF MICROMILLING AND OVERLAY
		BANK OF RIVER OR STREAM
		BORDER OF WETLAND
		100 FT WETLAND BUFFER
		200 FT RIVERFRONT BUFFER
		STATE HIGHWAY LAYOUT
		TOWN OR CITY LAYOUT
		COUNTY LAYOUT
		RAILROAD SIDELINE
		TOWN OR CITY BOUNDARY LINE
		PROPERTY LINE OR APPROXIMATE PROPERTY LINE
		EASEMENT

PAVEMENT MARKINGS SYMBOLS

EXISTING	PROPOSED	DESCRIPTION
		PAVEMENT ARROW - WHITE
ONLY	ONLY	LEGEND "ONLY" - WHITE
		BIKE LANE LEGEND - WHITE
	SL	STOP LINE
	CW	CROSSWALK
	SWL	SOLID WHITE LINE
	SYL	SOLID YELLOW LINE
	BWL	BROKEN WHITE LINE
	BYL	BROKEN YELLOW LINE
	DWL	6" DOTTED WHITE LINE (3' LINE W/ 9' GAP)
	DYL	6" DOTTED YELLOW LINE (3' LINE W/ 9' GAP)
	DWLEx	6" DOTTED WHITE LINE EXTENSION (2' LINE W/ 6' GAP)
	DYLEx	6" DOTTED YELLOW LINE EXTENSION (2' LINE W/ 6' GAP)
	DBWL	DOUBLE WHITE LINE
	DBYL	DOUBLE YELLOW LINE
	YGL	12" YELLOW GORE LINE (3:1, 10' O.C.)

TRAFFIC SYMBOLS

EXISTING	PROPOSED	DESCRIPTION
		CONTROLLER CABINET, FOUNDATION
		CONTROLLER CABINET, FOUNDATION, CONC. PAD
		MAST ARM FOUNDATION (SCALE OF BLOCK = DIAMETER IN INCHES)
		MAST ARM (LENGTH NOTED)
		EMERGENCY PREEMPTION CONFIRMATION STROBE LIGHT
		VEHICULAR SIGNAL HEAD
		PEDESTRIAN SIGNAL HEAD
		MAST ARM OR TS POLE MOUNTED SIGN
		EMERGENCY PRE-EMPTION RECEIVER
		EMERGENCY PRE-EMPTION CONFIRMATION STROBE
		PEDESTRIAN PUSH BUTTON
		YAGI ANTENNA
		BICYCLE WIRE LOOP DETECTOR (SIZE AS NOTED)
		WIRE LOOP DETECTOR (SIZE AND TYPE NOTED)
		TRAFFIC SIGN (1 POST)
		TRAFFIC SIGN (2 POST)
		PULL BOX 12"x12" (OR AS NOTED)
		ELECTRIC HANDHOLE 12"x24" (OR AS NOTED)
		TRAFFIC SIGNAL CONDUIT

ABBREVIATIONS

GENERAL

AADT	ANNUAL AVERAGE DAILY TRAFFIC
ABAN	ABANDON
ADJ	ADJUST
APPROX.	APPROXIMATE
A.C.	ASPHALT CONCRETE
ACCM PIPE	ASPHALT COATED CORRUGATED METAL PIPE
BIT.	BITUMINOUS
BC	BOTTOM OF CURB
BD.	BOUND
BL	BASELINE
BLDG	BUILDING
BM	BENCHMARK
BO	BY OTHERS
BOS	BOTTOM OF SLOPE
BR.	BRIDGE
CB	CATCH BASIN
CBCI	CATCH BASIN WITH CURB INLET
CC	CEMENT CONCRETE
CCM	CEMENT CONCRETE MASONRY
CEM	CEMENT
CI	CURB INLET
CIP	CAST IRON PIPE
CIT	CHANGE IN TYPE
CLF	CHAIN LINK FENCE
CL	CENTERLINE
CMP	CORRUGATED METAL PIPE
CSP	CORRUGATED STEEL PIPE
CO.	COUNTY
CONC	CONCRETE
CONT	CONTINUOUS
CONST	CONSTRUCTION
CR GR	CROWN GRADE
DHV	DESIGN HOURLY VOLUME
DI	DROP INLET
DIA	DIAMETER
DIP	DUCTILE IRON PIPE
DW	STEADY DON'T WALK - PORTLAND ORANGE
DWY	DRIVEWAY
ELEV (or EL.)	ELEVATION
EMB	EMBANKMENT
EOP	EDGE OF PAVEMENT
EXIST (or EX)	EXISTING
EXC	EXCAVATION
F&C	FRAME AND COVER
F&G	FRAME AND GRATE
FDN.	FOUNDATION
FDP	FULL DEPTH PAVEMENT
FLDSTN	FIELDSTONE
GAR	GARAGE
GC	GRANITE CURB
GD	GROUND
GG	GAS GATE
GI	GUTTER INLET
GIP	GALVANIZED IRON PIPE
GRAN	GRANITE
GRAV	GRAVEL
GRD	GUARD
HDW	HEADWALL
HH	HAND HOLE
HMA	HOT MIX ASPHALT
HOR	HORIZONTAL
HYD	HYDRANT
INV	INVERT
JCT	JUNCTION
L	LENGTH OF CURVE
LB	LEACH BASIN
LOG	LIMIT OF GRADING
LP	LIGHT POLE
L&S	LOAM AND SEED
LT	LEFT
MAX	MAXIMUM
MB	MAILBOX
MH	MANHOLE
MHB	MASSACHUSETTS HIGHWAY BOUND
MIN	MINIMUM
NIC	NOT IN CONTRACT
NO.	NUMBER
OCS	OUTLET CONTROL STRUCTURE
PC	POINT OF CURVATURE
PCC	POINT OF COMPOUND CURVATURE
P.G.L.	PROFILE GRADE LINE
PI	POINT OF INTERSECTION
POC	POINT ON CURVE
POT	POINT ON TANGENT
PRC	POINT OF REVERSE CURVATURE
PROJ	PROJECT
PROP	PROPOSED

LAWRENCE
LMRC RAIL TRAIL

STATE	FED. AID PROJ. NO.	SHEET NO.	TOTAL SHEETS
MA	-	2	225
PROJECT FILE NO.	608930		

LEGEND & ABBREVIATIONS

ABBREVIATIONS (cont.)

GENERAL

PSB	PLANTABLE SOIL BORROW
PT	POINT OF TANGENCY
PVC	POINT OF VERTICAL CURVATURE
PVI	POINT OF VERTICAL INTERSECTION
PVT	POINT OF VERTICAL TANGENCY
PVMT	PAVEMENT
PWW	PAVED WATERWAY
R	RADIUS OF CURVATURE
R&D	REMOVE AND DISPOSE
RCP	REINFORCED CONCRETE PIPE
RD	ROAD
RDWY	ROADWAY
REM	REMOVE
REMOD	REMODEL
RET	RETAIN
RET WALL	RETAINING WALL
ROW	RIGHT OF WAY
RR	RAILROAD
RRFB	RECTANGULAR RAPID FLASHING BEACON
R&R	REMOVE AND RESET
R&S	REMOVE AND STACK
RT	RIGHT
SB	STONE BOUND
SHLD	SHOULDER
SMH	SEWER MANHOLE
ST	STREET
STA	STATION
SSD	STOPPING SIGHT DISTANCE
SHLO	STATE HIGHWAY LAYOUT LINE
SW	SIDEWALK
T	TANGENT DISTANCE OF CURVE/TRUCK %
TAN	TANGENT
TEMP	TEMPORARY
TC	TOP OF CURB
TOS	TOP OF SLOPE
TYP	TYPICAL
UP	UTILITY POLE
VAR	VARIES
VERT	VERTICAL
VC	VERTICAL CURVE
WCR	WHEEL CHAIR RAMP
WG	WATER GATE
WIP	WROUGHT IRON PIPE
WM	WATER METER/WATER MAIN
X-SECT	CROSS SECTION

TRAFFIC SIGNAL ABBREVIATIONS

CAB.	CABINET
CCVE	CLOSED CIRCUIT VIDEO EQUIPMENT
DW	STEADY DON'T WALK
FDW	FLASHING DON'T WALK
FR	FLASHING CIRCULAR RED
FRL	FLASHING RED LEFT ARROW
FRR	FLASHING RED RIGHT ARROW
FY	FLASHING CIRCULAR YELLOW
FYL	FLASHING YELLOW LEFT ARROW
FYR	FLASHING YELLOW RIGHT ARROW
G	STEADY CIRCULAR GREEN
GL	STEADY GREEN LEFT ARROW
GR	STEADY GREEN RIGHT ARROW
GSL	STEADY GREEN SLASH LEFT ARROW
GSR	STEADY GREEN SLASH RIGHT ARROW
GV	STEADY GREEN VERTICAL ARROW
OL	OVERLAP
PED	PEDESTRIAN
PTZ	PAN, TILT, ZOOM
R	STEADY CIRCULAR RED
RL	STEADY RED LEFT ARROW
RR	STEADY RED RIGHT ARROW
TR SIG	TRAFFIC SIGNAL
TSC	TRAFFIC SIGNAL CONDUIT
W	STEADY WALKING PERSON
Y	STEADY CIRCULAR YELLOW
YL	STEADY YELLOW LEFT ARROW

608930_HD2(LEGEND).DWG Plotted on 28-Oct-2022 4:06 PM

Proposal No. 608930-128034

A00869 - 21

LAWRENCE
LMRC RAIL TRAIL

STATE	FED. AID PROJ. NO.	SHEET NO.	TOTAL SHEETS
MA	-	3	225
PROJECT FILE NO.		608930	

KEY PLAN

NAD 83

N

LEGEND

- CONSTRUCTION PLANS
- TRAFFIC SIGN & PAVEMENT MARKING PLANS
- TRAFFIC SIGNAL PLANS
- CURB TIE & GRADING PLANS
- UTILITY PLANS

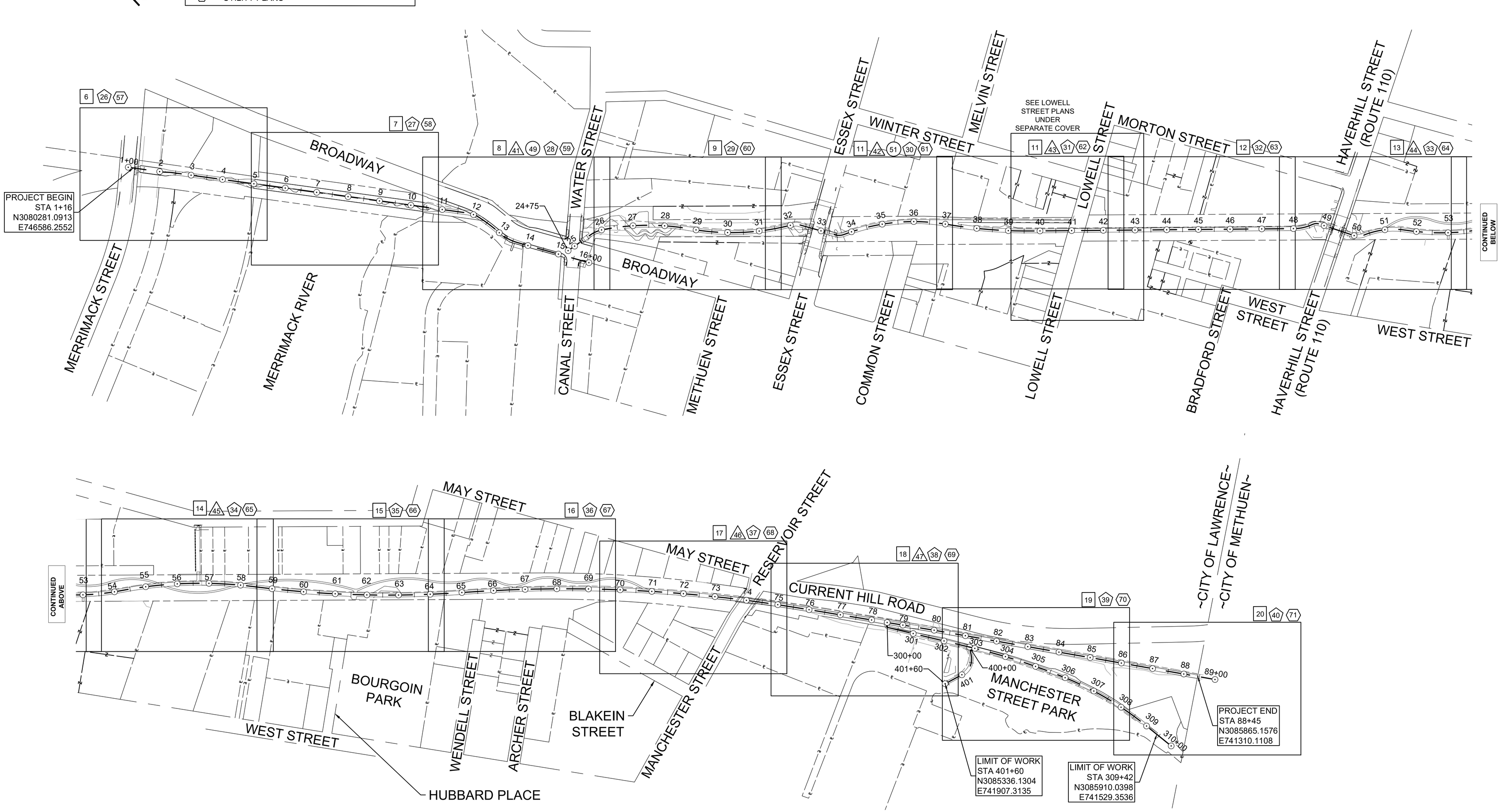

0 150 300 450 600

SCALE: 1" = 150'

FOR PERMITTING PURPOSES - NOT FOR CONSTRUCTION

608930_HD3(KEY PLAN).DWG Plotted on 28-Oct-2022 4:07 PM

Proposal No. 608930-128034

A00869 - 22

LAWRENCE
LMRC RAIL TRAIL

STATE	FED. AID PROJ. NO.	SHEET NO.	TOTAL SHEETS
MA	-	4	225
PROJECT FILE NO.	608930		

TYPICAL SECTIONS AND PAVEMENT NOTES - 1 OF 2

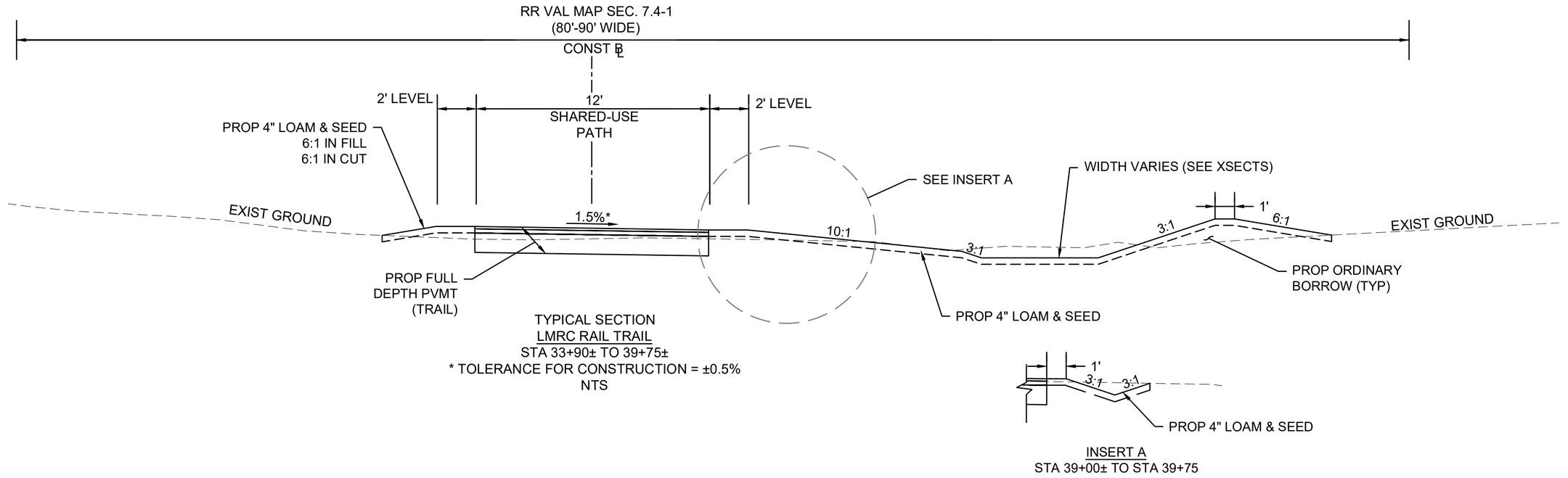

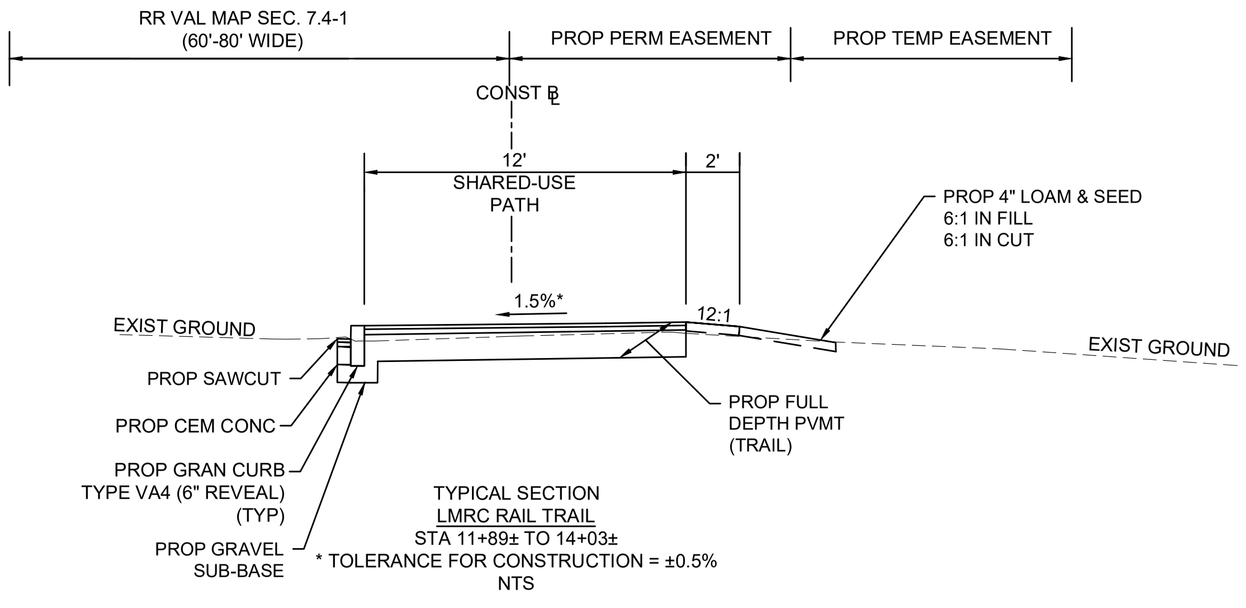

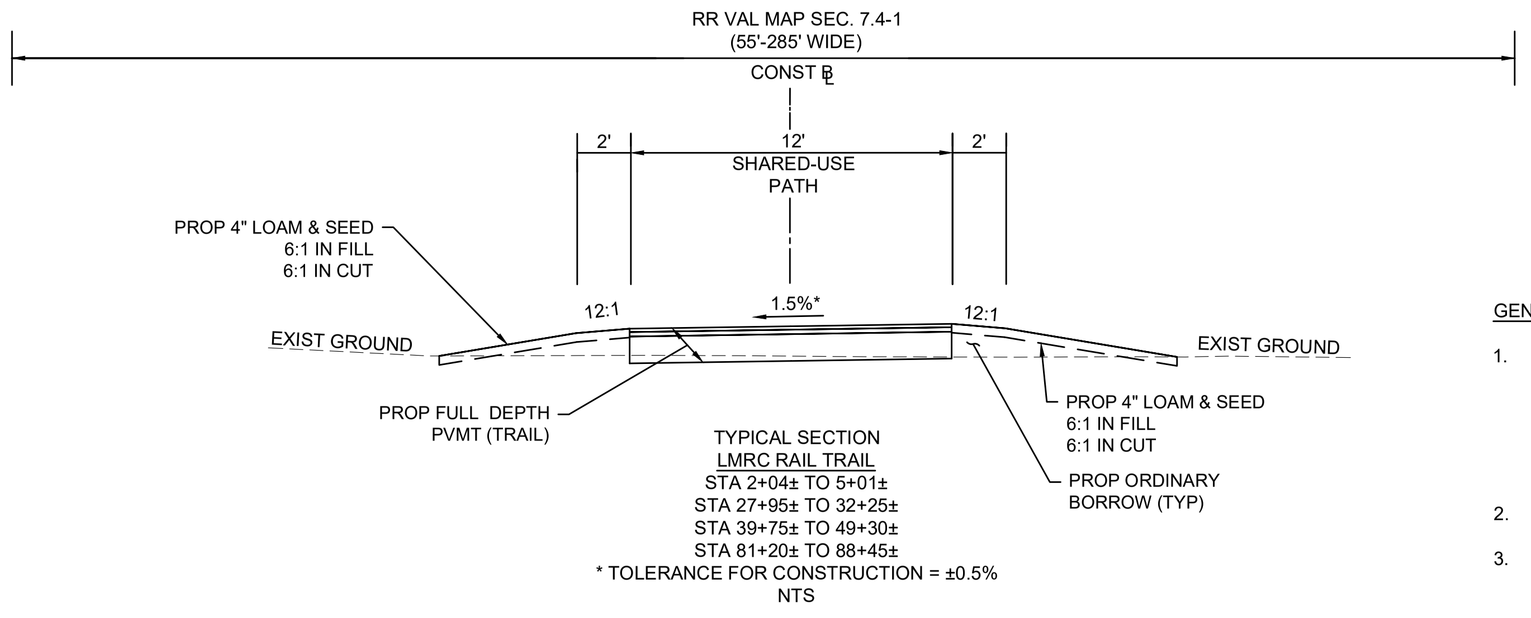

PAVEMENT NOTES

PROPOSED MILL & HMA OVERLAY

SURFACE: 1½" SUPERPAVE SURFACE COURSE - 12.5 (SSC - 12.5) OVER
1½" PAVEMENT FINE MILLING

PROPOSED HMA DRIVEWAY & HMA SIDEWALK THROUGH DRIVEWAY

SURFACE: 1½" SUPERPAVE SURFACE COURSE - 9.5 (SSC - 9.5) OVER
2½" SUPERPAVE SURFACE COURSE - 12.5 (SSC - 12.5) OVER

BASE: 8" GRAVEL BORROW, TYPE b
ADD GRAVEL BORROW. TYPE b AS REQUIRED

PROPOSED HMA SIDEWALK

SURFACE: 1¼" SUPERPAVE SURFACE COURSE - 9.5 (SSC - 9.5) OVER
1¾" SUPERPAVE SURFACE COURSE - 12.5 (SSC - 12.5) OVER

BASE: 8" GRAVEL BORROW, TYPE b

PROPOSED FULL DEPTH PAVEMENT (LESS THAN 4' WIDE)

SURFACE: 1½" SUPERPAVE SURFACE COURSE - 12.5 (SSC - 12.5) OVER
2¼" SUPERPAVE INTERMEDIATE COURSE - 19.0 (SIC - 19.0) OVER

BASE: 6" HIGH EARLY STRENGTH CEMENT CONCRETE BASE COURSE OVER

SUBBASE: 8" GRAVEL BORROW, TYPE b

PROPOSED FULL DEPTH PAVEMENT (ROADWAY)

SURFACE: 1½" SUPERPAVE SURFACE COURSE - 12.5 (SSC - 12.5) OVER
2¼" SUPERPAVE INTERMEDIATE COURSE - 19.0 (SIC - 19.0) OVER

BASE: 4½" SUPERPAVE BASE COURSE - 37.5 (SBC - 37.5) OVER

SUBBASE: 12" GRAVEL BORROW, TYPE b

PROPOSED FULL DEPTH PAVEMENT (TRAIL)

SURFACE: 1½" SUPERPAVE SURFACE COURSE - 9.5 (SSC - 9.5) OVER
2½" SUPERPAVE INTERMEDIATE COURSE - 12.5 (SIC - 12.5) OVER

BASE: 12" (MIN) GRAVEL BORROW, TYPE b

PROPOSED PERMANENT PAVEMENT TRENCH PATCH

SURFACE: 1½" SUPERPAVE SURFACE COURSE - 12.5 (SSC - 12.5) OVER
2¼" SUPERPAVE INTERMEDIATE COURSE - 19.0 (SIC - 19.0) OVER
(VARIABLE DEPTH (SEE NOTE 5) SUPERPAVE INTERMEDIATE COURSE - 19.0 (SIC - 19.0)
COMPACTED IN 2¼" (MIN) AND 3" (MAX) LIFTS OVER

BASE: 8" GRAVEL BORROW, TYPE b OVER

SUBBASE: EXISTING MATERIAL SUITABLE FOR RE-USE SUPPLEMENTED WITH GRAVEL BORROW AS NECESSARY TO MATCH GRADE (SEE VARIOUS TRENCH DETAILS)

PROPOSED CEMENT CONCRETE SIDEWALK / CURB RAMP / MEDIAN

SURFACE: 4" CEMENT CONCRETE (4000 PSI, ¾", 610)

BASE: 8" GRAVEL BORROW, TYPE b

PROPOSED CEMENT CONCRETE SIDEWALK THROUGH DRIVEWAY

SURFACE: 6" CEMENT CONCRETE (4000 PSI, ¾", 610)

BASE: 8" GRAVEL BORROW, TYPE b

GRAVEL WALK

SURFACE: 4" DENSE GRADED CRUSHED STONE FOR SUBBASE OVER

BASE: 8" GRAVEL BORROW,TYPE b

GENERAL PAVEMENT NOTES:

1. ASPHALT EMULSION FOR TACK COAT SHALL BE APPLIED BETWEEN ALL ASPHALT SURFACES AND SAWCUT JOINTS BEFORE PAVING. HMA JOINT ADHESIVE SHALL BE APPLIED TO ALL COLD JOINTS (LONGITUDINAL AND TRANSVERSE) BEFORE PAVING SURFACE COURSE. ASPHALT EMULSION FOR TACK COAT SHALL BE APPLIED IN ACCORDANCE WITH SUBSECTION 450.43. ALL SURFACES SHALL BE CLEAN OF ALL ORGANICS, DEBRIS, AND SAND PRIOR TO PAVING.
2. ALL HMA SHALL BE IN ACCORDANCE WITH SECTION 450.
3. ALL GRAVEL BORROW MEETING SPECIFICATION DETERMINED BY THE ENGINEER SHALL BE RETAINED IN PLACE, COMPACTED, AND LEVELED WITH GRAVEL BORROW TYPE b AS REQUIRED.
4. REFER TO BRIDGE PLANS FOR TREATMENT OVER THE BRIDGES.
5. TOTAL DEPTH OF PROPOSED PAVEMENT IN PERMANENT TRENCH PATCH SHALL BE 8.25" OR SHALL MATCH THE EXISTING PAVEMENT DEPTH, WHICHEVER DEPTH IS DEEPER.

608930_HDA(TYPICAL SECTIONS).DWG Plotted on 28-Oct-2022 4:07 PM

Proposal No. 608930-128034

A00869 - 23 - 59

608930_HD4(TYPICAL SECTIONS).DWG Plotted on 28-Oct-2022 4:08 PM

LAWRENCE
LMRC RAIL TRAIL

STATE	FED. AID PROJ. NO.	SHEET NO.	TOTAL SHEETS
MA	-	5	225
PROJECT FILE NO. 608930			

TYPICAL SECTIONS AND PAVEMENT NOTES - 2 OF 2

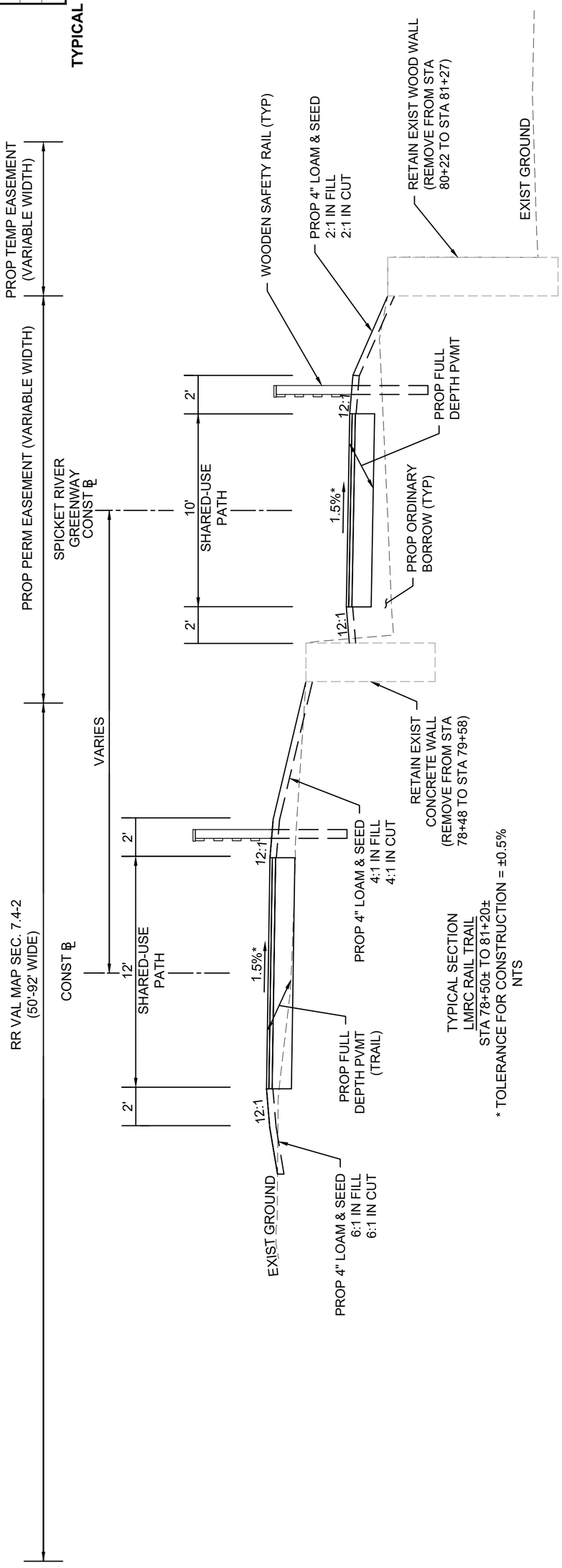

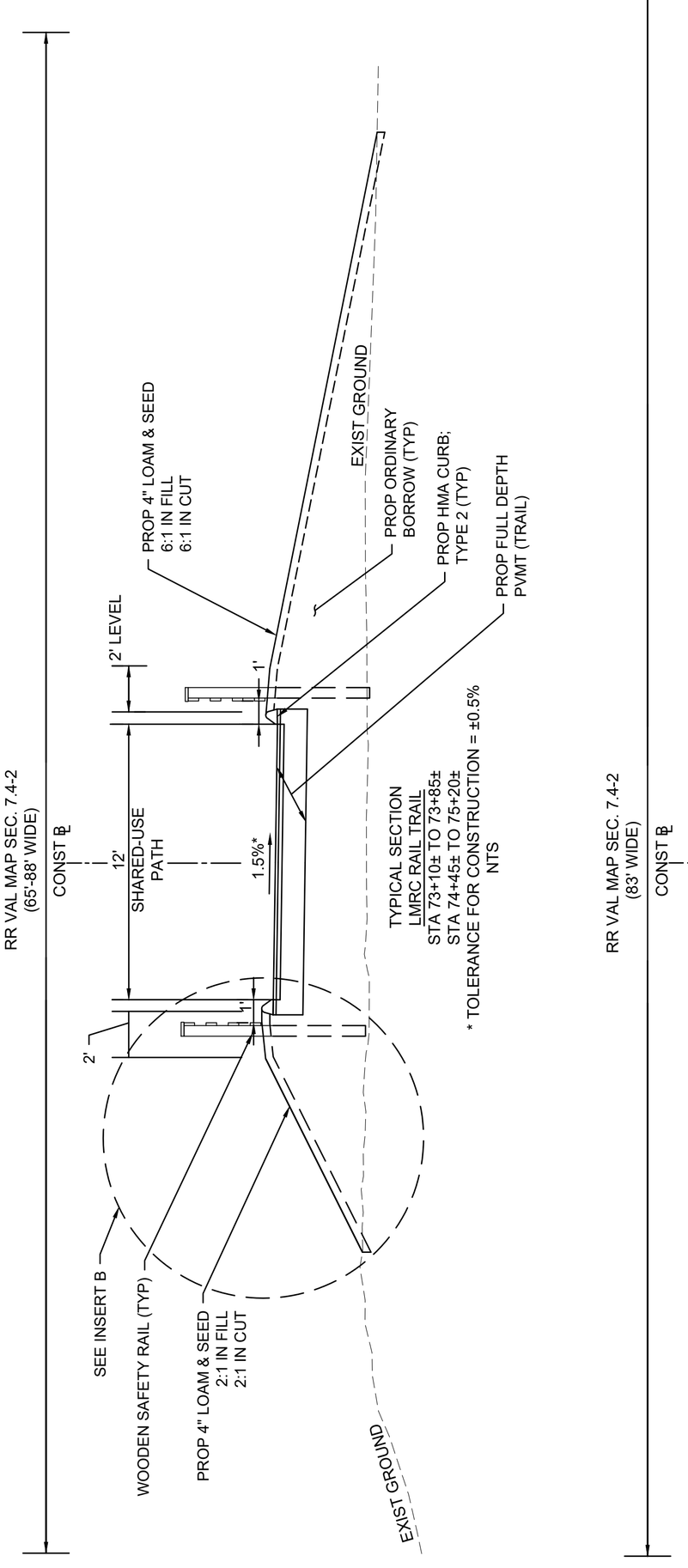

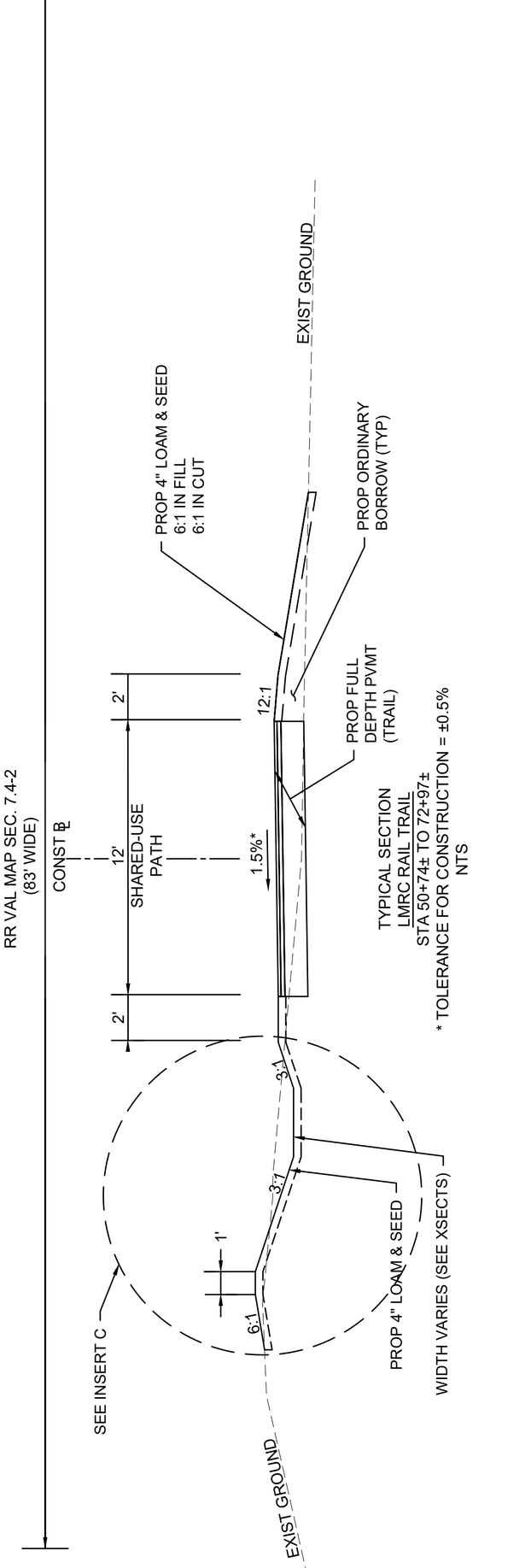

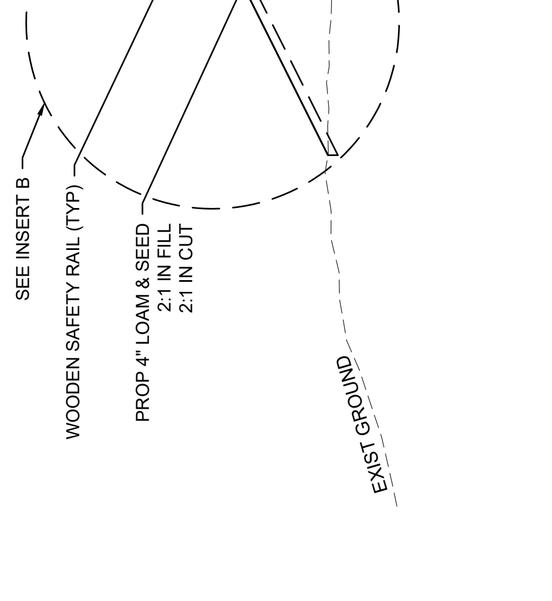

INSERT B
STA 74+45± TO 75+20±
* TOLERANCE FOR CONSTRUCTION ±0.5%
NTS

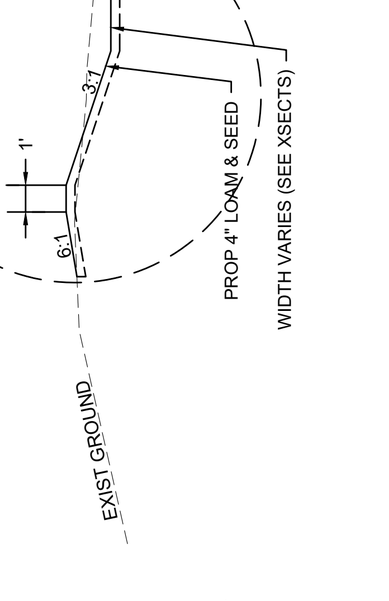

INSERT C
* TOLERANCE FOR CONSTRUCTION ±0.5%
NTS

FOR PERMITTING PURPOSES - NOT FOR CONSTRUCTION

608930_HD5(CONSTRUCTION PLANS).DWG Plotted on 28-Oct-2022 4:34 PM

LAWRENCE
LMRC RAIL TRAIL

STATE	FED. AID PROJ. NO.	SHEET NO.	TOTAL SHEETS
MA	-	6	225
PROJECT FILE NO. 608930			

CONSTRUCTION PLANS - 1 OF 15

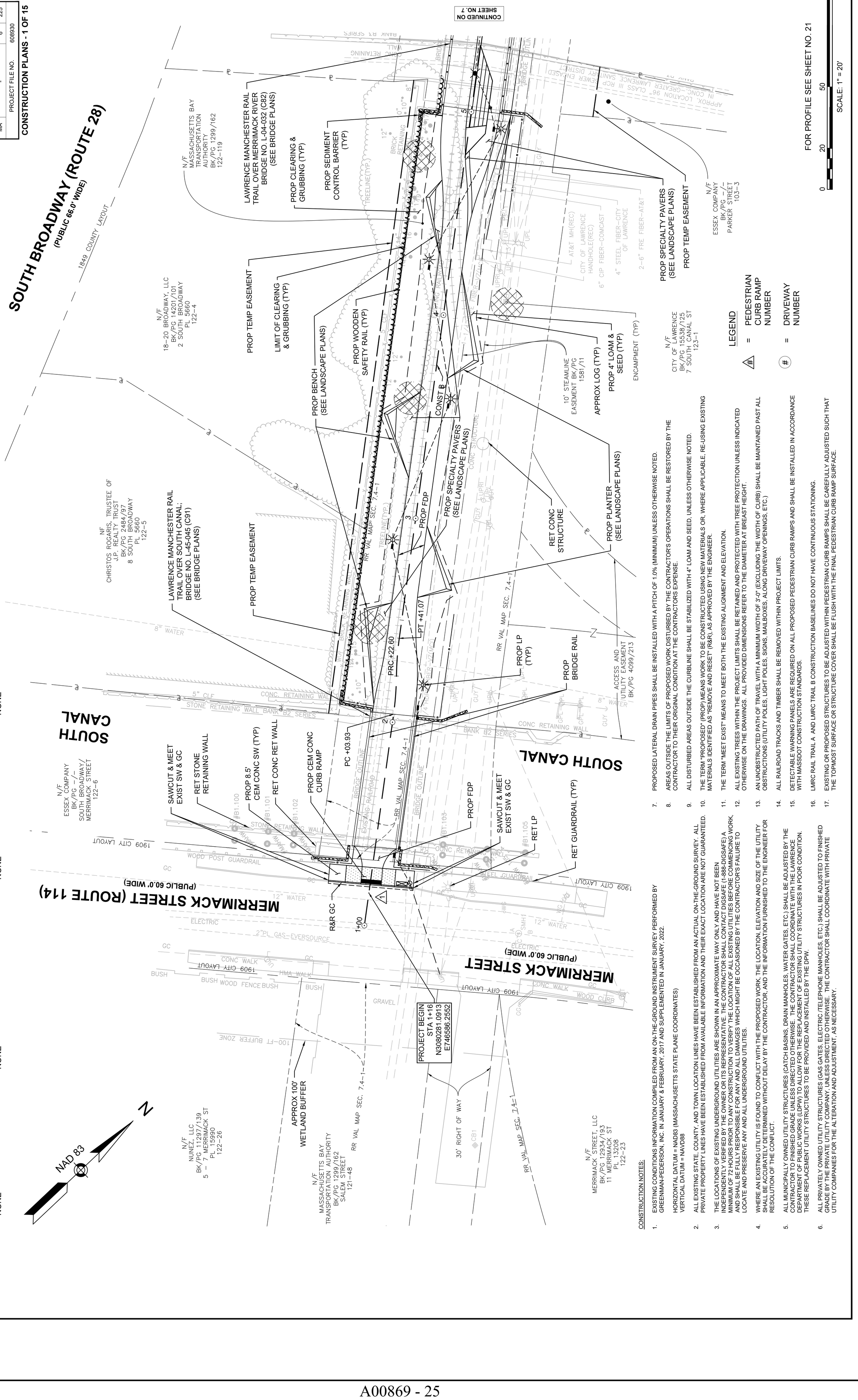

LEGEND

⟨#⟩ = PEDESTRIAN CURB RAMP NUMBER

(#) = DRIVEWAY NUMBER

WATER SUPPLY ALTERATIONS

NONE

TRAFFIC SIGNAL CONDUIT

NONE

HIGHWAY GUARD DETAILS

NONE

DRAINAGE DETAILS

NONE

CONSTRUCTION NOTES:

1. EXISTING CONDITIONS INFORMATION COMPILED FROM AN ON-THE-GROUND INSTRUMENT SURVEY PERFORMED BY GREENMAN-PEDERSON, INC. IN JANUARY & FEBRUARY, 2017 AND SUPPLEMENTED IN JANUARY, 2022.

   HORIZONTAL DATUM = NAD83 (MASSACHUSETTS STATE PLANE COORDINATES)
   VERTICAL DATUM = NAVD88

2. ALL EXISTING STATE, COUNTY, AND TOWN LOCATION LINES HAVE BEEN ESTABLISHED FROM AN ACTUAL ON-THE-GROUND SURVEY. ALL PRIVATE PROPERTY LINES HAVE BEEN ESTABLISHED FROM AVAILABLE INFORMATION AND THEIR EXACT LOCATION ARE NOT GUARANTEED.

3. THE LOCATIONS OF EXISTING UNDERGROUND UTILITIES ARE SHOWN IN AN APPROXIMATE WAY ONLY AND HAVE NOT BEEN INDEPENDENTLY VERIFIED BY THE OWNER OR ITS REPRESENTATIVE. THE CONTRACTOR SHALL CONTACT DIGSAFE (1-888-DIGSAFE) A MINIMUM OF 72 HOURS PRIOR TO ANY CONSTRUCTION TO VERIFY THE LOCATION OF ALL EXISTING UTILITIES BEFORE COMMENCING WORK, AND SHALL BE FULLY RESPONSIBLE FOR ANY AND ALL DAMAGES WHICH MIGHT BE OCCASIONED BY THE CONTRACTOR'S FAILURE TO LOCATE AND PRESERVE ANY AND ALL UNDERGROUND UTILITIES.

4. WHERE AN EXISTING UTILITY IS FOUND TO CONFLICT WITH THE PROPOSED WORK, THE LOCATION, ELEVATION AND SIZE OF THE UTILITY SHALL BE ACCURATELY DETERMINED WITHOUT DELAY BY THE CONTRACTOR, AND THE INFORMATION FURNISHED TO THE ENGINEER FOR RESOLUTION OF THE CONFLICT.

5. ALL MUNICIPALLY OWNED UTILITY STRUCTURES (CATCH BASINS, DRAIN MANHOLES, WATER GATES, ETC.) SHALL BE ADJUSTED BY THE CONTRACTOR TO FINISHED GRADE UNLESS DIRECTED OTHERWISE. THE CONTRACTOR SHALL COORDINATE WITH THE LAWRENCE DEPARTMENT OF PUBLIC WORKS (LDPW) TO ALLOW FOR THE REPLACEMENT OF EXISTING UTILITY STRUCTURES IN POOR CONDITION. THESE REPLACEMENT UTILITY STRUCTURES TO BE PROVIDED AND INSTALLED BY THE DPW.

6. ALL PRIVATELY OWNED UTILITY STRUCTURES (GAS GATES, ELECTRIC /TELEPHONE MANHOLES, ETC.) SHALL BE ADJUSTED TO FINISHED GRADE BY THE PRIVATE UTILITY COMPANY, UNLESS DIRECTED OTHERWISE. THE CONTRACTOR SHALL COORDINATE WITH PRIVATE UTILITY COMPANIES FOR THE ALTERATION AND ADJUSTMENT, AS NECESSARY.

7. PROPOSED LATERAL DRAIN PIPES SHALL BE INSTALLED WITH A PITCH OF 1.0% (MINIMUM) UNLESS OTHERWISE NOTED.

8. AREAS OUTSIDE THE LIMITS OF PROPOSED WORK DISTURBED BY THE CONTRACTOR'S OPERATIONS SHALL BE RESTORED BY THE CONTRACTOR TO THEIR ORIGINAL CONDITION AT THE CONTRACTORS EXPENSE.

9. ALL DISTURBED AREAS OUTSIDE THE CURBLINE SHALL BE STABILIZED WITH 4" LOAM AND SEED, UNLESS OTHERWISE NOTED.

10. THE TERM "PROPOSED" (PROP) MEANS WORK TO BE CONSTRUCTED USING NEW MATERIALS OR, WHERE APPLICABLE, RE-USING EXISTING MATERIALS IDENTIFIED AS "REMOVE AND RESET" (R&R), AS APPROVED BY THE ENGINEER.

11. THE TERM "MEET EXIST" MEANS TO MEET BOTH THE EXISTING ALIGNMENT AND ELEVATION.

12. ALL EXISTING TREES WITHIN THE PROJECT LIMITS SHALL BE RETAINED AND PROTECTED WITH TREE PROTECTION UNLESS INDICATED OTHERWISE ON THE DRAWINGS. ALL PROVIDED DIMENSIONS REFER TO THE DIAMETER AT BREAST HEIGHT.

13. AN UNOBSTRUCTED PATH OF TRAVEL WITH A MINIMUM WIDTH OF 3'-0" (EXCLUDING THE WIDTH OF CURB) SHALL BE MAINTAINED PAST ALL OBSTRUCTIONS (UTILITY POLES, LIGHT POLES, SIGNS, MAILBOXES, ALONG DRIVEWAY OPENINGS, ETC.)

14. ALL RAILROAD TRACKS AND TIMBER SHALL BE REMOVED WITHIN PROJECT LIMITS.

15. DETECTABLE WARNING PANELS ARE REQUIRED ON ALL PROPOSED PEDESTRIAN CURB RAMPS AND SHALL BE INSTALLED IN ACCORDANCE WITH MASSDOT CONSTRUCTION STANDARDS.

16. LMRC RAIL TRAIL A AND LMRC TRAIL B CONSTRUCTION BASELINES DO NOT HAVE CONTINUOUS STATIONING.

17. EXISTING OR PROPOSED STRUCTURES TO BE ADJUSTED WITHIN PEDESTRIAN CURB RAMPS SHALL BE CAREFULLY ADJUSTED SUCH THAT THE TOPMOST SURFACE OR STRUCTURE COVER SHALL BE FLUSH WITH THE FINAL PEDESTRIAN CURB RAMP SURFACE.

FOR PERMITTING PURPOSES - NOT FOR CONSTRUCTION

608930_HD5(CONSTRUCTION PLANS).DWG Plotted on 28-Oct-2022 4:34 PM

LAWRENCE
LMRC RAIL TRAIL

STATE	FED. AID PROJ. NO.	SHEET NO.	TOTAL SHEETS
MA	-	7	225
PROJECT FILE NO. 608930			

CONSTRUCTION PLANS - 2 OF 15

LEGEND

△# = PEDESTRIAN CURB RAMP NUMBER

(#) = DRIVEWAY NUMBER

WATER SUPPLY ALTERATIONS
NONE

DRAINAGE DETAILS
NONE

TRAFFIC SIGNAL CONDUIT
NONE

HIGHWAY GUARD DETAILS
NONE

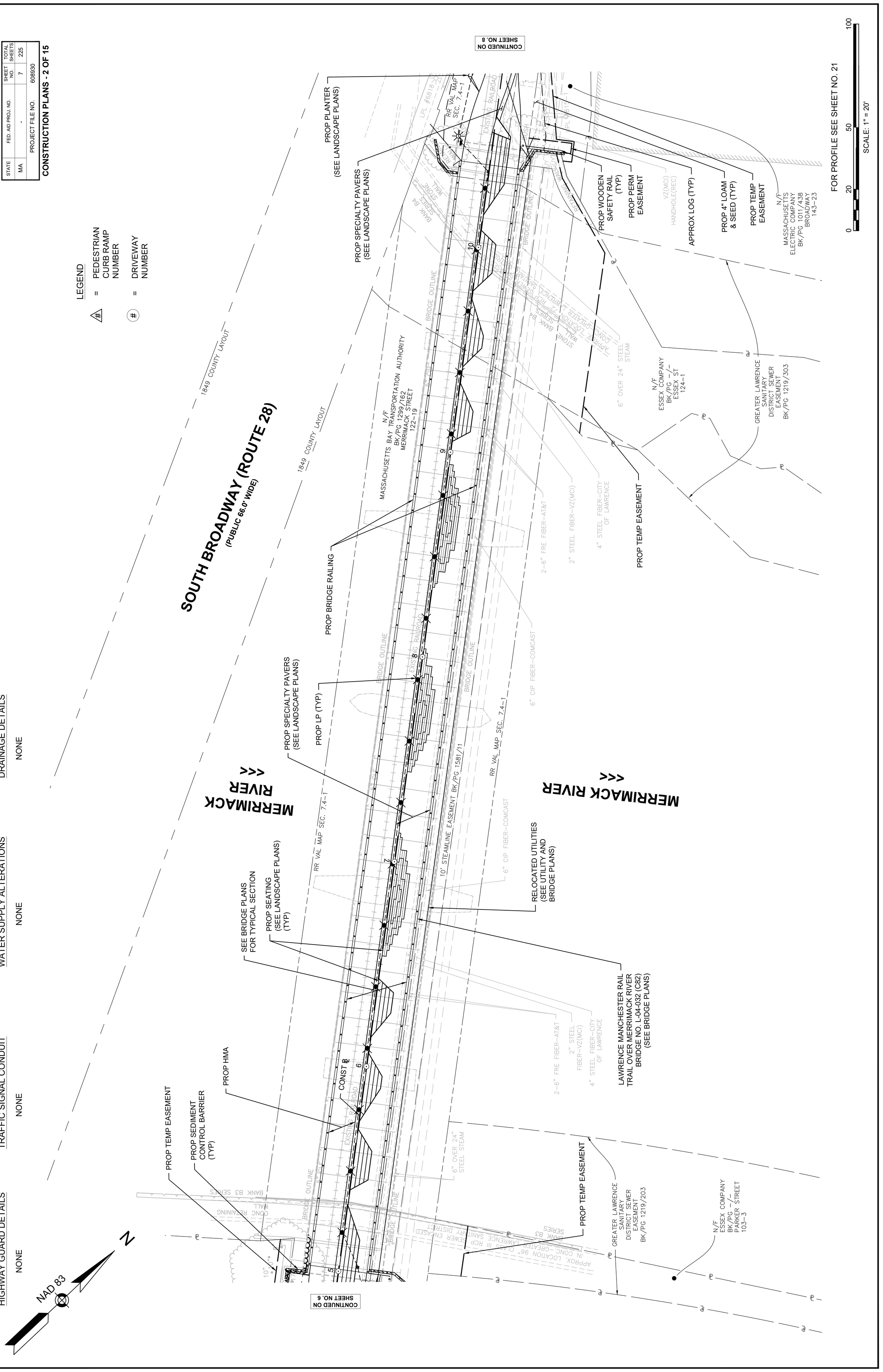

FOR PERMITTING PURPOSES - NOT FOR CONSTRUCTION

HIGHWAY GUARD DETAILS

NONE

TRAFFIC SIGNAL CONDUIT

SEE SHEET 49

WATER SUPPLY ALTERATIONS

NONE

DRAINAGE DETAILS

SEE SHEET 59

LEGEND

△# = PEDESTRIAN CURB RAMP NUMBER

(#) = DRIVEWAY NUMBER

LAWRENCE
LMRC RAIL TRAIL

STATE	FED. AID PROJ. NO.	SHEET NO.	TOTAL SHEETS
MA	-	8	225
PROJECT FILE NO.	608930		

CONSTRUCTION PLANS - 3 OF 15

NAD 83

N

BROADWAY - ROUTE 28
(PUBLIC)

NORTH CANAL

WATER STREET
(PUBLIC - 50' WIDE)

CANAL STREET
(PUBLIC - 50' WIDE)

BROADWAY - ROUTE 28
(PUBLIC)

NORTH CANAL

CONTINUED ON SHEET NO. 7

CONTINUED ON SHEET NO. 9

PROP SPECIALTY PAVERS (SEE LANDSCAPE PLANS)
PROP SEATING (SEE LANDSCAPE PLANS)
PROP PLANTER (SEE LANDSCAPE PLANS)
REMOVE TRACKS (TYP)
SAWCUT & MEET EXIST SW
RET GC
PC +77.47
PROP FDP
PCC +21.75
RET CEM CONC
PROP TEMP EASEMENT
APPROX LOG (TYP)
REM SIGNAL FOUNDATION
PROP GC; TYPE VB
10' STEAMLINE EASEMENT BK/PG 1581/11
PROP TEMP EASEMENT
PROP WOODEN SAFETY RAIL (TYP)
PROP PERM EASEMENT
PROP TEMP EASEMENT
R&S LP
PROP PERM EASEMENT
PRC +99.22
PROP TEMP EASEMENT
APPROX LOG (TYP)
PROP 4" LOAM & SEED (TYP)
MEET EXIST DWY (SAWCUT)
PROP CEM CONC MEDIAN
PROP HMA SW THRU DWY
PT +66.47
CONST ℄
PROP TEMP EASEMENT
RET GUARDRAIL
PROP HMA DWY
PROP PERM EASEMENT
MEET EXIST DWY (SAWCUT)
PROP TEMP EASEMENT
APPROX 100' WETLAND BUFFER
PROP GC; TYPE VB
40' PASSAGEWAY FOR ABUTTERS PLAN 8527
100-FT BUFFER ZONE
PROP PERM EASEMENT
RET
PROP TS POST (TYP)
10' STEAMLINE EASEMENT BK/PG 1581/11
MEET EXIST GC & SW
PROP SAWCUT (TYP)
PROP PERMANENT TRENCH PATCH
PROP CEM CONC SW TO MEET EXIST
LIMIT OF HMA MILL & OVERLAY
MEET EXIST GC & SW
BEGIN CITY LAYOUT ALTERATION
RET CLF & GATE
PROP TEMP EASEMENT
END CITY LAYOUT ALTERATION
RET GRATE
MEET EXIST GC & SW
MEET EXIST GC & SW
PROP HMA MILL & OVERLAY
MEET EXIST GC & SW
PROP GC (TYPE VA4) (TYP)
PROP TEMP EASEMENT
RET WOOD FENCE
PROP 8' CEM CONC SW
LIMIT OF WORK
R&S EHH
PROP FDP
REM CONC
R&D TS CAB
R&S EHH
ADJ PB
LIMIT FDP
R&S EHH
24+75
ADJ PB
LIMIT OF WORK
R&S EHH
PROP TS CONDUIT (TYP)
LIMIT OF WORK
BEGIN CITY LAYOUT ALTERATION
REM CLF FROM STA 25+50 TO STA 30+39
PROP SPECIALTY PAVERS (SEE LANDSCAPE PLANS)
PROP SEATING (SEE LANDSCAPE PLANS)
PROP WEATHERING STEEL SCREEN FENCE (SEE LANDSCAPE PLANS)
PROP TEMP EASEMENT
PCC +03.2
PROP 4" LOAM & SEED
PC +61.09
RET LP
PROP TS CAB
END CITY LAYOUT ALTERATION
PROP TEMP EASEMENT
PROP 12' CEM CONC SW
RET LP
MEET EXIST GC & SW
16+00
RET LP
END CITY LAYOUT ALTERATION
PROP TEMP EASEMENT
BEGIN CITY LAYOUT ALTERATION
MEET EXIST GC & SW
PROP HMA MILL & OVERLAY

N/F MASSACHUSETTS BAY TRANSPORTATION AUTHORITY BK/PG 1299/162 BROADWAY 144–29

N/F ESSEX COMPANY BK/PG –/– ESSEX ST 143–21

N/F SLEIMAN A. RAMY BK/PG 7532/159 1 WATER STREET PL 4296 144–3

N/F HODEN FAMILY REALTY, LLC BK/PG 16201/145 3–5 WATER ST 144–2

N/F MASSACHUSETTS ELECTRIC COMPANY BK/PG 1011/438 BROADWAY 143–23

N/F MERRIMACK FALLS LLC BK/PG 12492/11 BROADWAY PL 7841, PL 8527 143–22

N/F ESSEX COMPANY BK/PG –/– ESSEX ST 124–1

N/F NUNEZ LLC BK/PG 16673/321 468 CANAL STREET 144–28

N/F ESSEX COMPANY BK/PG –/– WATER ST 144–27–1

N/F 6–12 HAMPSHIRE STREET, LLC BK/PG 13424/72 606 CANAL STREET 144–27–2

N/F BROADWAYCANAL–1 LLC BK/PG 16328/128 3 BROADWAY 144–24

FOR PROFILE SEE SHEET NO. 21

0 20 50 100

SCALE: 1" = 20'

FOR PERMITTING PURPOSES - NOT FOR CONSTRUCTION

A00869 - 27

Proposal No. 608930-128034

608930_HDS(CONSTRUCTION PLANS).DWG Plotted on 28-Oct-2022 4:35 PM

608930_HD5(CONSTRUCTION PLANS).DWG Plotted on 28-Oct-2022 4:35 PM

LAWRENCE
LMRC RAIL TRAIL

STATE	FED. AID PROJ. NO.	SHEET NO.	TOTAL SHEETS
MA	-	9	225
PROJECT FILE NO. 608930			

CONSTRUCTION PLANS - 4 OF 15

LEGEND

- (#) = PEDESTRIAN CURB RAMP NUMBER
- (#) = DRIVEWAY NUMBER

DRAINAGE DETAILS

SEE SHEET 60

WATER SUPPLY ALTERATIONS

NONE

TRAFFIC SIGNAL CONDUIT

NONE

HIGHWAY GUARD DETAILS

STA 27+63 LT TO STA 32+61 LT WOOD RAIL FENCE W/ GUARDRAIL

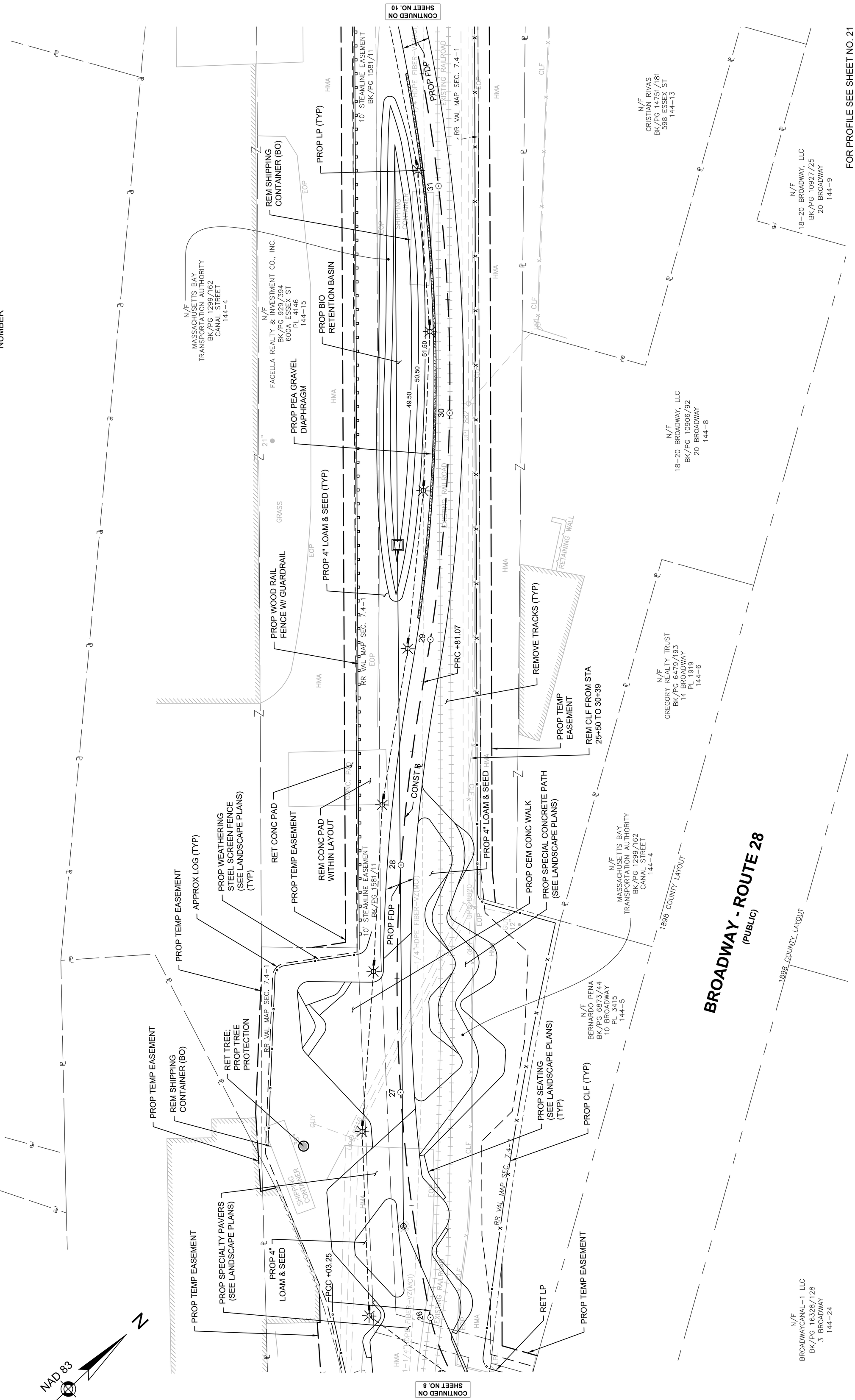

FOR PERMITTING PURPOSES - NOT FOR CONSTRUCTION

LAWRENCE
LMRC RAIL TRAIL

STATE	FED. AID PROJ. NO.	SHEET NO.	TOTAL SHEETS
MA	-	10	225
PROJECT FILE NO.	608930		

CONSTRUCTION PLANS - 5 OF 15

608930_HDS(CONSTRUCTION PLANS).DWG Plotted on 28-Oct-2022 4:35 PM

HIGHWAY GUARD DETAILS

STA 27+63 LT TO STA 32+61 LT WOOD RAIL FENCE W/ GUARDRAIL

TRAFFIC SIGNAL CONDUIT

NONE

WATER SUPPLY ALTERATIONS

NONE

DRAINAGE DETAILS

SEE SHEET 61

LEGEND

△# = PEDESTRIAN CURB RAMP NUMBER

(#) = DRIVEWAY NUMBER

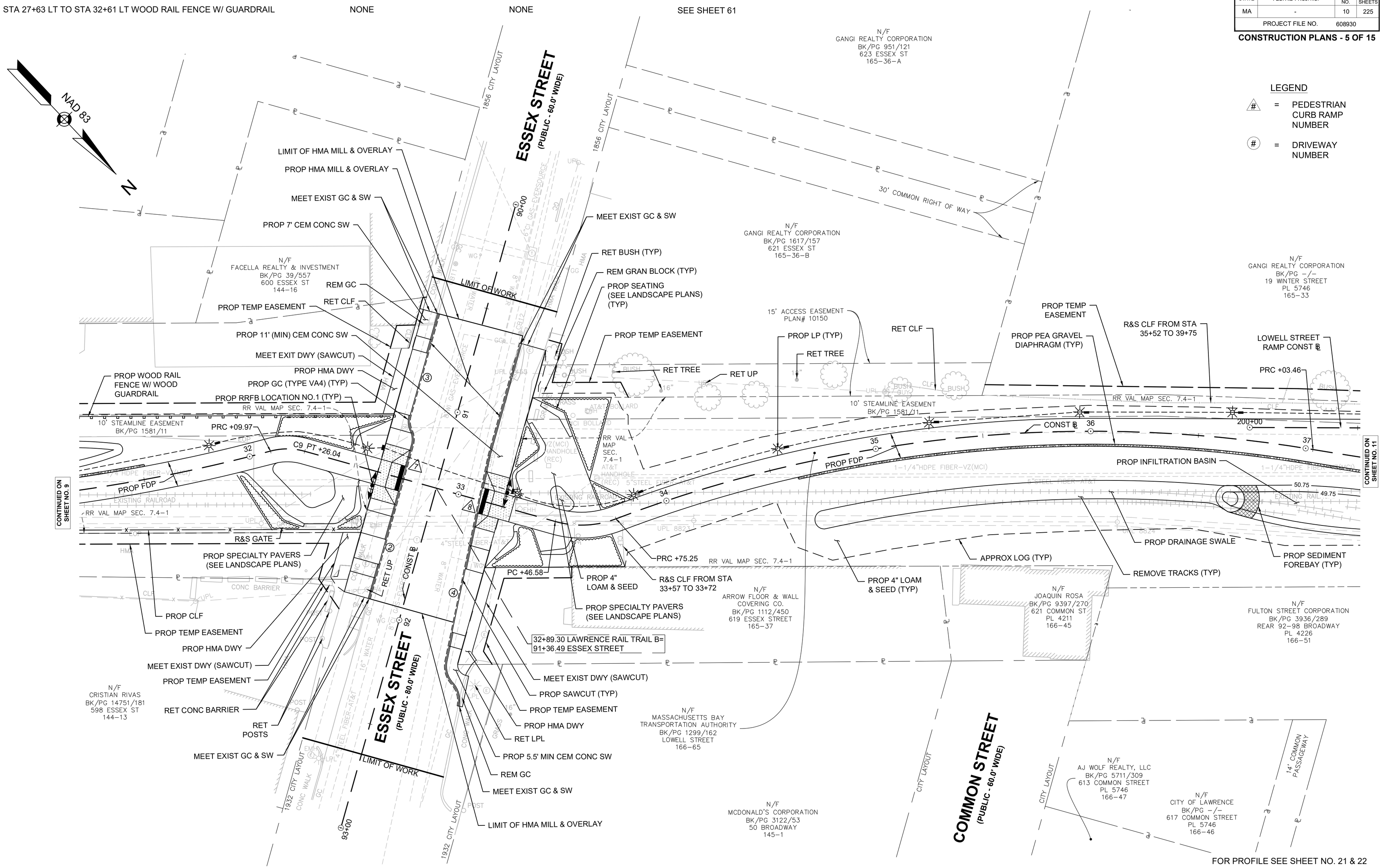

FOR PERMITTING PURPOSES - NOT FOR CONSTRUCTION

608930_HD5(CONSTRUCTION PLANS).DWG Plotted on 28-Oct-2022 4:35 PM

LAWRENCE
LMRC RAIL TRAIL

STATE	FED. AID PROJ. NO.	SHEET NO.	TOTAL SHEETS
MA	-	11	225
PROJECT FILE NO. 608930			

CONSTRUCTION PLANS - 6 OF 15

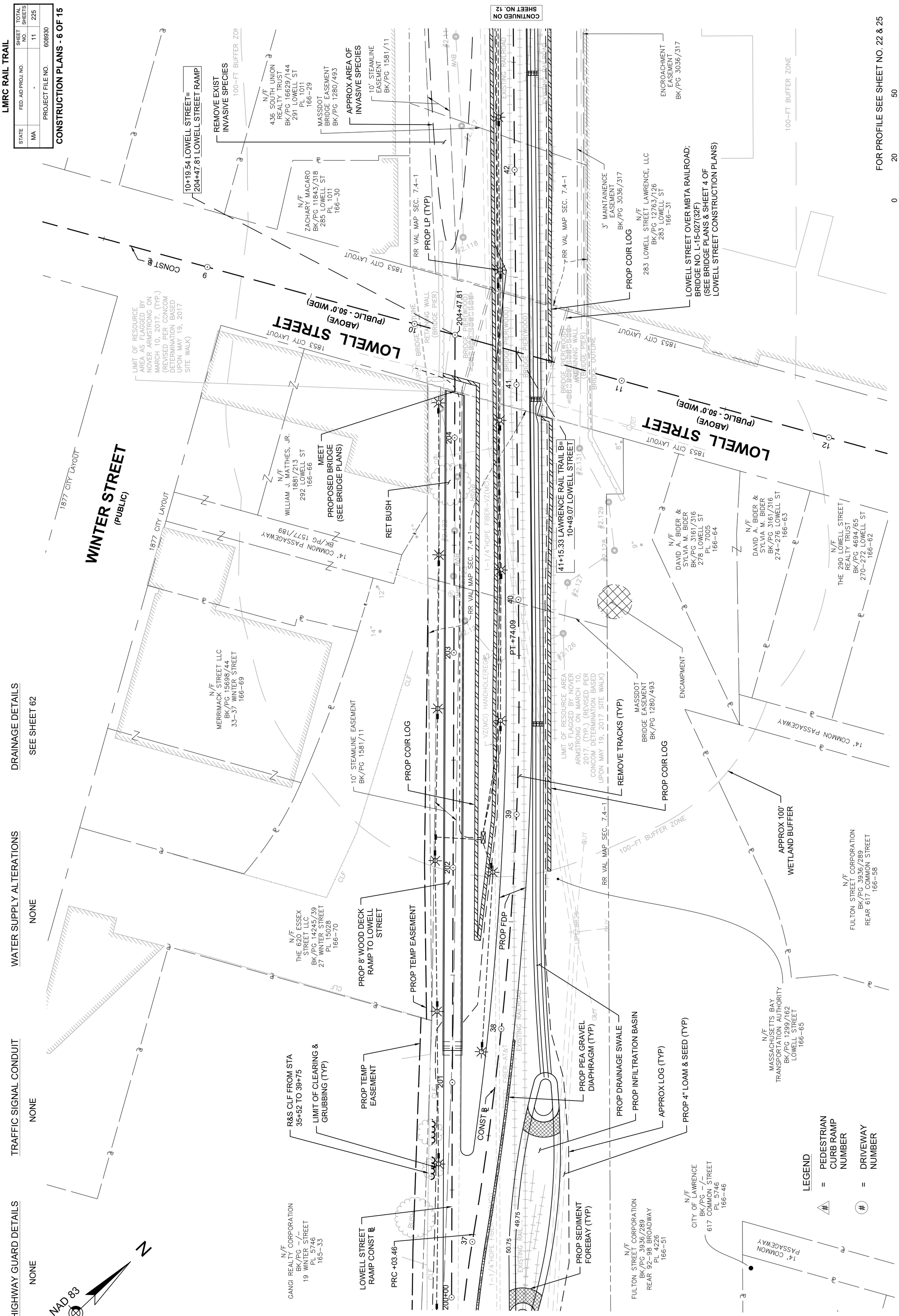

608930_HD5(CONSTRUCTION PLANS).DWG Plotted on 28-Oct-2022 4:36 PM

LAWRENCE
LMRC RAIL TRAIL

STATE	FED. AID PROJ. NO.	SHEET NO.	TOTAL SHEETS
MA	-	12	225
PROJECT FILE NO. 608930			

CONSTRUCTION PLANS - 7 OF 15

LEGEND

△# = PEDESTRIAN CURB RAMP NUMBER

(#) = DRIVEWAY NUMBER

WATER SUPPLY ALTERATIONS

NONE

TRAFFIC SIGNAL CONDUIT

NONE

HIGHWAY GUARD DETAILS

NONE

DRAINAGE DETAILS

SEE SHEET 63

FOR PROFILE SEE SHEET NO. 22

0 20 50 100

SCALE: 1" = 20'

FOR PERMITTING PURPOSES - NOT FOR CONSTRUCTION

608930_HD5(CONSTRUCTION PLANS).DWG Plotted on 28-Oct-2022 4:36 PM

LAWRENCE
LMRC RAIL TRAIL

STATE	FED. AID PROJ. NO.	SHEET NO.	TOTAL SHEETS
MA	-	13	225
PROJECT FILE NO. 608930			

CONSTRUCTION PLANS - 8 OF 15

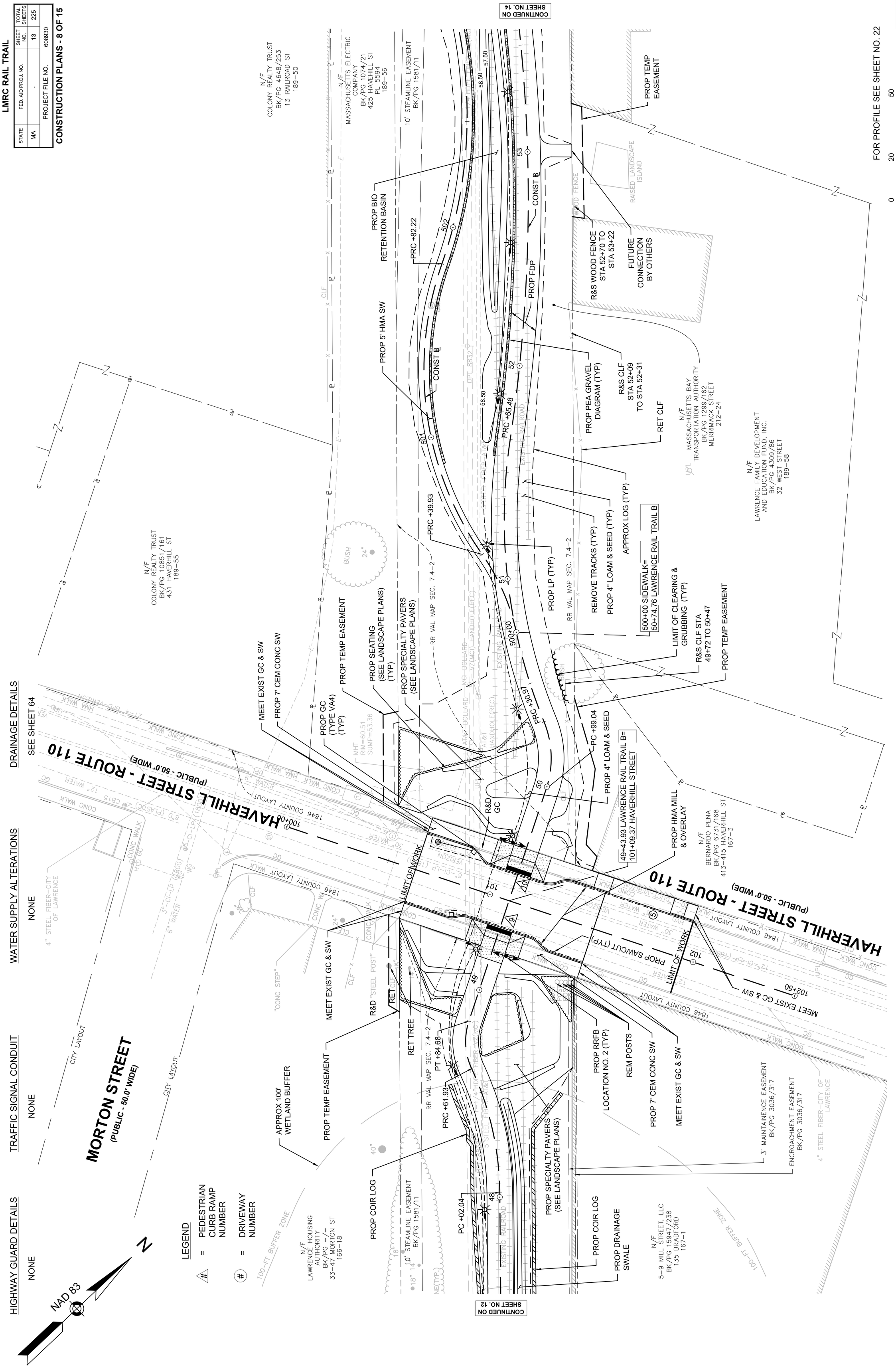

FOR PERMITTING PURPOSES - NOT FOR CONSTRUCTION

HIGHWAY GUARD DETAILS

NONE

TRAFFIC SIGNAL CONDUIT

NONE

WATER SUPPLY ALTERATIONS

NONE

DRAINAGE DETAILS

SEE SHEET 65

NAD 83

N

LEGEND

= PEDESTRIAN CURB RAMP NUMBER

(#) = DRIVEWAY NUMBER

RAILROAD STREET

(PUBLIC)

LAWRENCE
LMRC RAIL TRAIL

STATE	FED. AID PROJ. NO.	SHEET NO.	TOTAL SHEETS
MA	-	14	225
PROJECT FILE NO.	608930		

CONSTRUCTION PLANS - 9 OF 15

608930_HDS(CONSTRUCTION PLANS).DWG Plotted on 28-Oct-2022 4:36 PM

N/F
COLONY REALTY TRUST
BK/PG 10260/92
25 RAILROAD ST
189-49

AREA SUBJECT TO AUL
BK/PG 5465/325

PROP GC CORNER TYPE A

MEET EXIST SW & GC

CITY LAYOUT

RET CLF

PROP TEMP EASEMENT

PROP HMA DWY

MEET EXIST DWY (SAWCUT)

RET STONE

RET CLF

12' COMMON DRIVEWAY PL 14085

RET HMA CURB

PROP PERM EASEMENT

PROP TEMP EASEMENT

PROP CONCRETE WHEEL STOP (TYP)

504+88.19 SIDEWALK=
55+49.36 LAWRENCE RAIL TRAIL B

N/F
RAFAEL JAVIER
& MARIA JAVIER
BK/PG 6464/178
45 RAILROAD ST
PL 14085
189-48-1

N/F
JOSE M. BATISTA ESPINAL
BK/PG 16185/187
51 RAILROAD ST
189-47

N/F
JACQUES OUELLET
& LOUISE OUELLET
BK/PG 1341/440
55 RAILROAD ST
189-46

N/F
COLONY REALTY TRUST
BK/PG 4648/253
13 RAILROAD ST
189-50

R&S CLF
STA 54+90 TO 56+77

PROP 5' HMA SW (TYP)

PROP PEA GRAVEL DIAGRAM (TYP)

MEET EXIST PAVEMENT

REM HMA BERM

RET HMA BERM

N/F
JAVIER RAFAEL JR
& MARIA JAVIER
BK/PG 15611/222
41 RAILROAD ST
189-48-2

PROP CLEARING & GRUBBING (TYP)

LIMIT OF CLEARING & GRUBBING (TYP)

PROP TEMP EASEMENT

RET TREE; PROP TREE PROTECTION (TYP)

PROP TEMP EASEMENT

PROP SAWCUT

REM EXIST PVMT; PROP 12" LOAM & SEED

PROP TEMP EASEMENT

N/F
MASSACHUSETTS ELECTRIC COMPANY
BK/PG 1074/21
425 HAVEHILL ST
PL 5594
189-56

PROP BIO RETENTION BASIN

PROP TEMP EASEMENT

RET TREE; PROP TREE PROTECTION (TYP)

RET LP

PROP BIO RETENTION BASIN

10' STEAMLINE EASEMENT
BK/PG 1581/11

RR VAL MAP SEC. 7.4-2

PROP LP (TYP)

PROP DRAINAGE SWALE

PRC +20.66

PRC +18.85

PRC +85.70

PRC +92.55

PRC +42.99

CONST B

PROP FDP

1-1/4"HDPE FIBER-AT&T

1-1/4"HDPE FIBER-VZ(MCI)

EXISTING RAILROAD

CONTINUED ON SHEET NO. 13

CONTINUED ON SHEET NO. 15

MASSACHUSETTS ELECTRIC EASEMENT
BK/PG 1074/21

PROP STONE FOR PIPE ENDS

R&S WOOD FENCE
STA 52+70 TO STA 53+22

R&S CLF STA 54+18
TO STA 54+95

RET TRACKS OUTSIDE LIMITS OF WORK

RET TRACKS OUTSIDE LIMITS OF WORK

PROP BIO RETENTION BASIN

APPROX LOG (TYP)

PROP 4" LOAM & SEED (TYP)

PROP TEMP EASEMENT

R&S WOOD FENCE
STA 54+18 TO STA 54+85

REMOVE TRACKS (TYP)

57+98.32 LAWRENCE RAIL TRAIL B=
507+42.61 SIDEWALK

N/F
MASSACHUSETTS BAY
TRANSPORTATION AUTHORITY
BK/PG 1299/162
MERRIMACK STREET
212-24

N/F
LAWRENCE FAMILY DEVELOPMENT
AND EDUCATION FUND, INC.
BK/PG 4309/86
32 WEST STREET
189-58

N/F
MASSACHUSETTS ELECTRIC COMPANY
BK/PG -/-
50 WEST ST
189-59

N/F
130-136 WEST STREET, LLC
BK/PG 10129/3
CERT# 15412
LCC 19576A
WEST STREET
190-11

FOR PROFILE SEE SHEET NO. 22

0 20 50 100

SCALE: 1" = 20'

FOR PERMITTING PURPOSES - NOT FOR CONSTRUCTION

A00869 - 33 - 9

Proposal No. 608930-128034

608930_HD5(CONSTRUCTION PLANS).DWG Plotted on 28-Oct-2022 4:37 PM

LAWRENCE
LMRC RAIL TRAIL

STATE	FED. AID PROJ. NO.	SHEET NO.	TOTAL SHEETS
MA	-	15	225
PROJECT FILE NO.	608930		

CONSTRUCTION PLANS - 10 OF 15

LEGEND

△# = PEDESTRIAN CURB RAMP NUMBER

(#) = DRIVEWAY NUMBER

RAILROAD STREET
(PUBLIC)

CITY LAYOUT

HUBBARD PLACE
(PUBLIC)

1945 CITY LAYOUT

BOURGOIN SQUARE PARK

GRASS

CONTINUED ON SHEET NO. 16

FOR PROFILE SEE SHEET NO. 23

0 20 50 100
SCALE: 1" = 20'

DRAINAGE DETAILS
SEE SHEET 66

WATER SUPPLY ALTERATIONS
NONE

TRAFFIC SIGNAL CONDUIT
NONE

HIGHWAY GUARD DETAILS
NONE

NAD 83

CONTINUED ON SHEET NO. 14

FOR PERMITTING PURPOSES - NOT FOR CONSTRUCTION

608930_HD5(CONSTRUCTION PLANS).DWG Plotted on 28-Oct-2022 4:37 PM

LAWRENCE
LMRC RAIL TRAIL

STATE	FED. AID PROJ. NO.	SHEET NO.	TOTAL SHEETS
MA	-	16	225
PROJECT FILE NO.	608930		

CONSTRUCTION PLANS - 11 OF 15

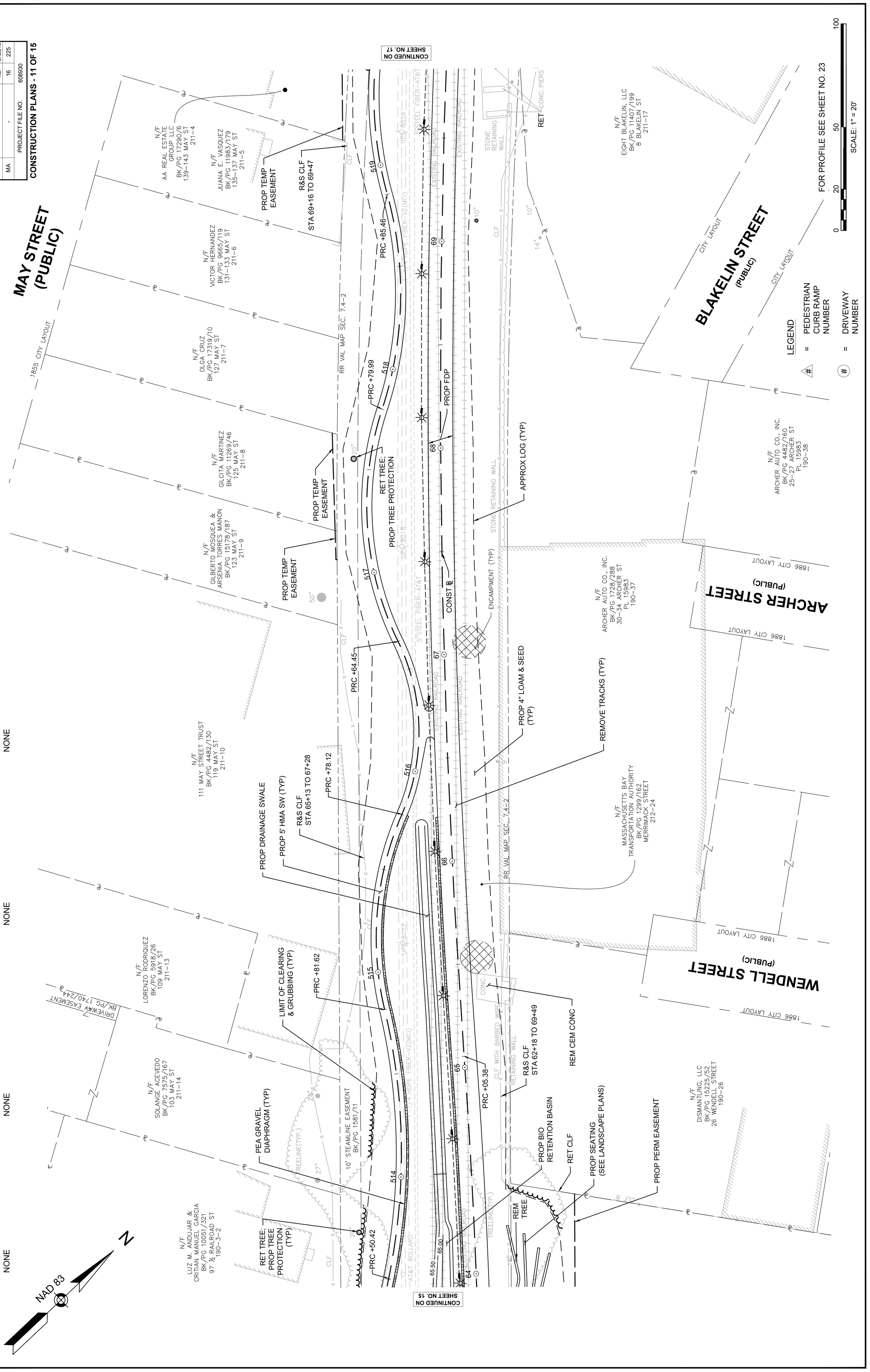

FOR PERMITTING PURPOSES - NOT FOT CONSTRUCTION

608930_HD5(CONSTRUCTION PLANS).DWG Plotted on 28-Oct-2022 4:37 PM

LAWRENCE
LMRC RAIL TRAIL

STATE	FED. AID PROJ. NO.	SHEET NO.	TOTAL SHEETS
MA	-	17	225
PROJECT FILE NO.	608930		

CONSTRUCTION PLANS - 12 OF 15

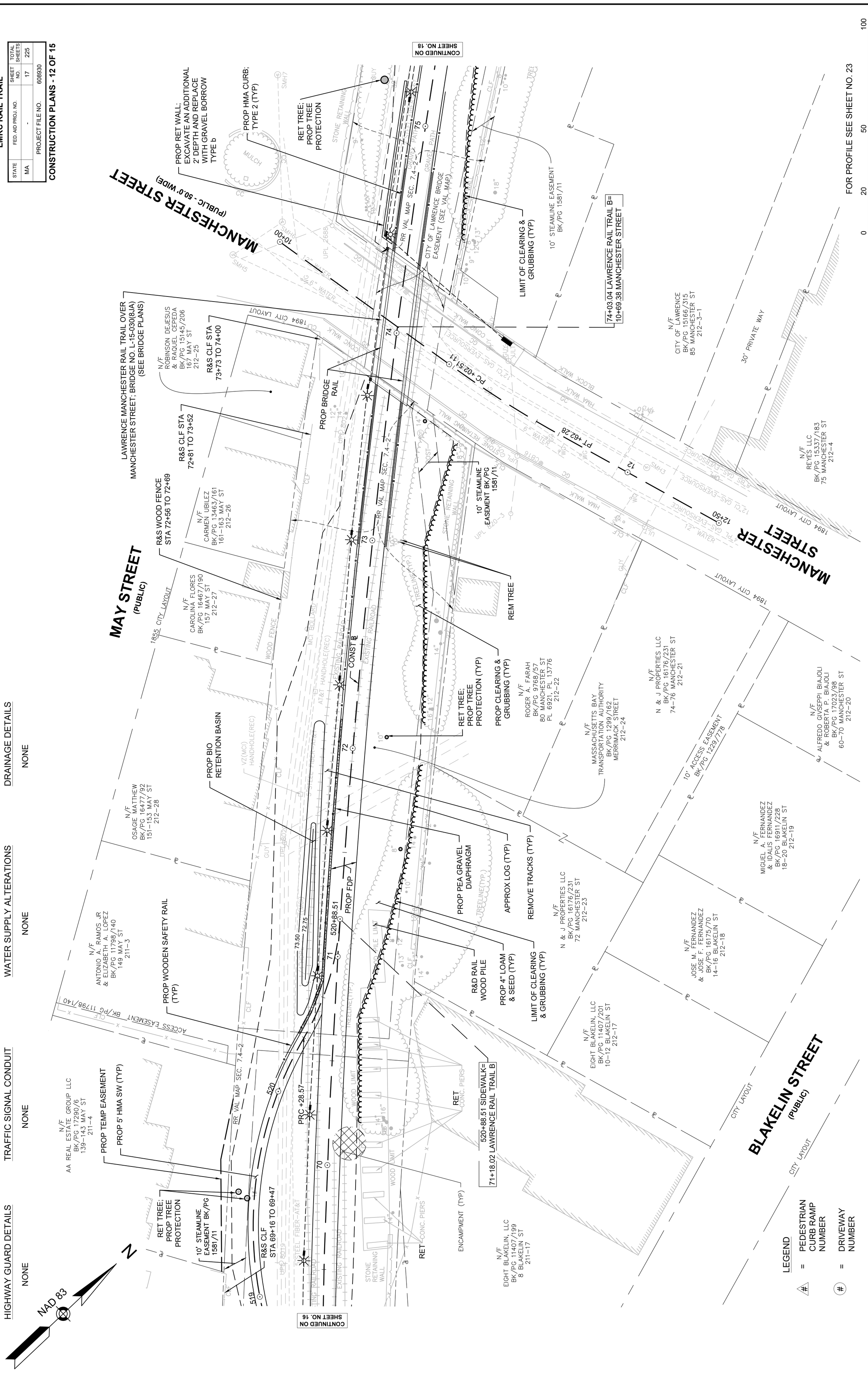

DRAINAGE DETAILS

NONE

WATER SUPPLY ALTERATIONS

NONE

TRAFFIC SIGNAL CONDUIT

NONE

HIGHWAY GUARD DETAILS

NONE

FOR PERMITTING PURPOSES - NOT FOR CONSTRUCTION

608930_HD5(CONSTRUCTION PLANS).DWG Plotted on 28-Oct-2022 4:38 PM

LAWRENCE
LMRC RAIL TRAIL

STATE	FED. AID PROJ. NO.	SHEET NO.	TOTAL SHEETS
MA	-	18	225
PROJECT FILE NO. 608930			

CONSTRUCTION PLANS - 13 OF 15

LEGEND

- ⚠# = PEDESTRIAN CURB RAMP NUMBER
- (#) = DRIVEWAY NUMBER

HIGHWAY GUARD DETAILS
NONE

WATER SUPPLY ALTERATIONS
NONE

TRAFFIC SIGNAL CONDUIT
NONE

DRAINAGE DETAILS
NONE

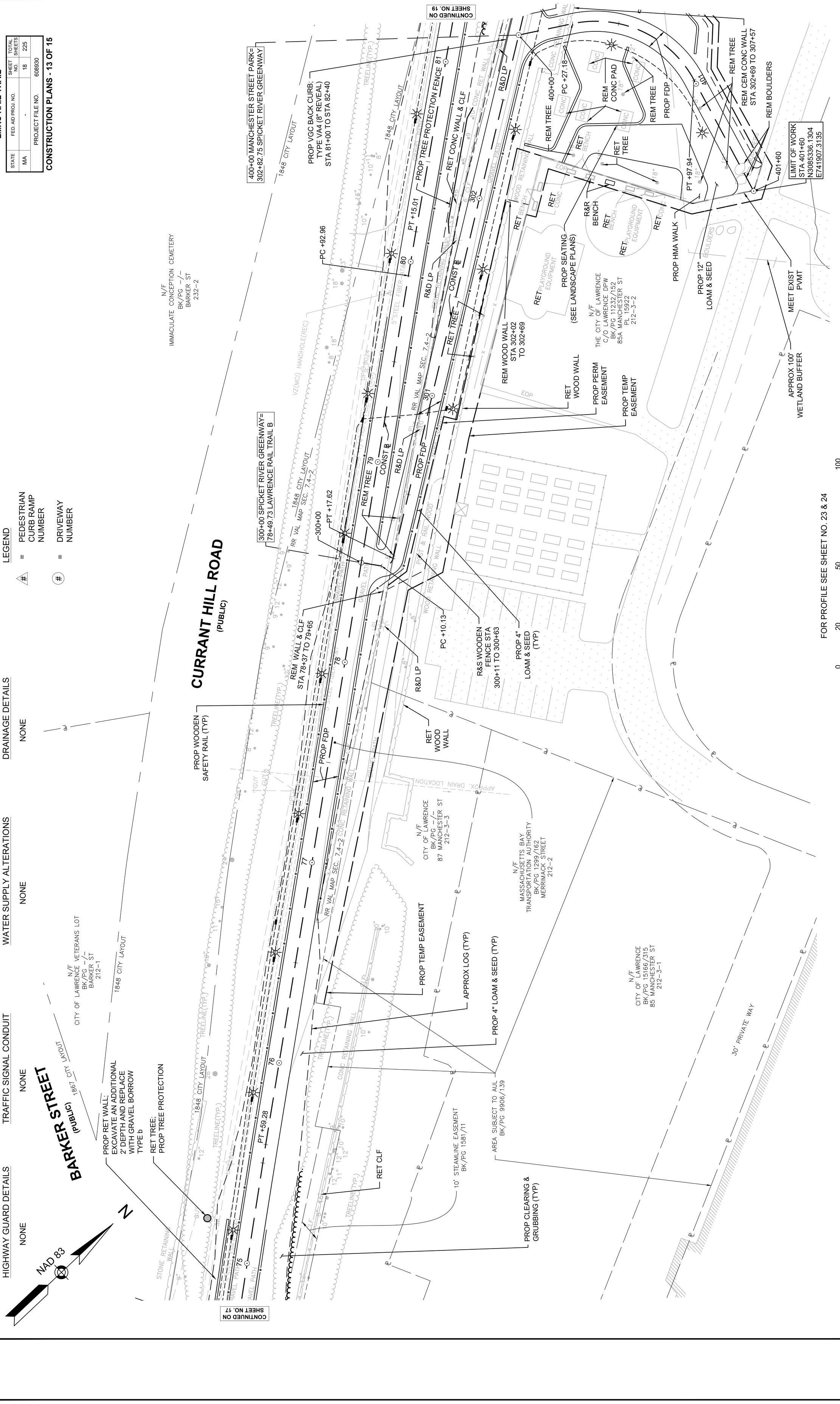

FOR PERMITTING PURPOSES - NOT FOR CONSTRUCTION

6089301_HD5(CONSTRUCTION PLANS).DWG Plotted on 28-Oct-2022 4:38 PM

LAWRENCE
LMRC RAIL TRAIL

STATE	FED. AID PROJ. NO.	SHEET NO.	TOTAL SHEETS
MA	-	19	225
PROJECT FILE NO. 608930			

CONSTRUCTION PLANS - 14 OF 15

LEGEND

- ⚠# = PEDESTRIAN CURB RAMP NUMBER
- (#) = DRIVEWAY NUMBER

WATER SUPPLY ALTERATIONS

NONE

DRAINAGE DETAILS

NONE

TRAFFIC SIGNAL CONDUIT

NONE

HIGHWAY GUARD DETAILS

NONE

CURRANT HILL ROAD

(PUBLIC)

1848 CITY LAYOUT

RR VAL MAP SEC. 7.4-2

TREELINE(TYP.)

UPL 8025

1-1/4"HDPE FIBER-VZ(MCI)

5"STEEL FIBER-AT&I

GUY

GRAVEL PATH

26"

PROP GRAVEL WALK

CONTINUED ON SHEET NO. 20

R&D LP

PROP FDP

84

PROP CLEARING & GRUBBING (TYP)

12"

N/F
MASSACHUSETTS BAY TRANSPORTATION AUTHORITY
BK/PG 1299/162
MERRIMACK STREET
212-2

CONC RETAINING WALL

6" CLF

305

GRAVEL PATH

CONC RETAINING WALL

RET CONC PAD

PROP PERM EASEMENT

APPROX 100' WETLAND BUFFER

PROP 4" LOAM & SEED (TYP)

LIMIT OF CLEARING & GRUBBING (TYP)

306

PCC +06.50

R&S WOODEN FENCE
STA 304+93 TO 307+16

400+00 MANCHESTER STREET PARK=
302+82.75 SPICKET RIVER GREENWAY

PROP VGC BACK CURB;
TYPE VA4 (8" REVEAL)
STA 81+00 TO STA 82+40

REM WOOD WALL
STA 302+02 TO 302+69

82

CONST ℄

RET CONC WALL

303

PC +92.78

REM CEM CONC WALL
STA 302+69 TO 307+57

PROP HMA WALK

PROP 12" LOAM & SEED

83

C23

304

PROP SEATING
(SEE LANDSCAPE PLANS)
(TYP)

APPROX LOG (TYP)

PROP WOODEN SAFETY RAIL
(TYP)

PROP TEMP EASEMENT

N/F
THE CITY OF LAWRENCE
C/O LAWRENCE DPW
BK/PG 11232/152
85A MANCHESTER ST
PL 15922
212-3-2

100-FT BUFFER ZONE

12" SPICKET RIVER GREENWAY

81

PROP TREE PROTECTION FENCE

PT +15.01

PROP 4" LOAM & SEED

R&D LP

CONC RET WALL

REM TREE 400+00

PC +27.18

REM CONC PAD

REM TREE

PROP FDP

401

REM TREE

REM BOULDERS

MEET EXIST PVMT

LIMIT OF WORK
STA 401+60
N3085336.1304
E741907.3135

401+60

PT +97.94

RET BENCH

RET TREE

R&R BENCH

RET BENCH

RET CONC

RET CONC

302

CONTINUED ON SHEET NO. 18

NAD 83

N

R&D LP

PROP FDP

308

PROP SEDIMENT CONTROL BARRIER (TYP)

BANK

#B7.106

#B7.107

#B7.108

#B7.109

#B7.110

#B7.111

#B7.112

#B7.113

#B7.114

#B7.115

#B7.116

#B7.117

#B7.118

#B7.119

#B7.120

#B7.121

#B7.122

#2.100

#2.102

#2.103

#2.104

#2.105

#2.106

#2.107

LIMIT OF RESOURCE AREA AS FLAGGED BY NOVER ARMSTRONG ON MARCH 10, 2017. (TYP.)

307

FOR PROFILE SEE SHEET NO. 24

0 20 50 100

SCALE: 1" = 20'

FOR PERMITTING PURPOSES - NOT FOR CONSTRUCTION

LAWRENCE
LMRC RAIL TRAIL

STATE	FED. AID PROJ. NO.	SHEET NO.	TOTAL SHEETS
MA	-	20	225
PROJECT FILE NO.	608930		

CONSTRUCTION PLANS - 15 OF 15

608930_HDS(CONSTRUCTION PLANS).DWG Plotted on 28-Oct-2022 4:38 PM

HIGHWAY GUARD DETAILS
NONE

TRAFFIC SIGNAL CONDUIT
NONE

WATER SUPPLY ALTERATIONS
NONE

DRAINAGE DETAILS
NONE

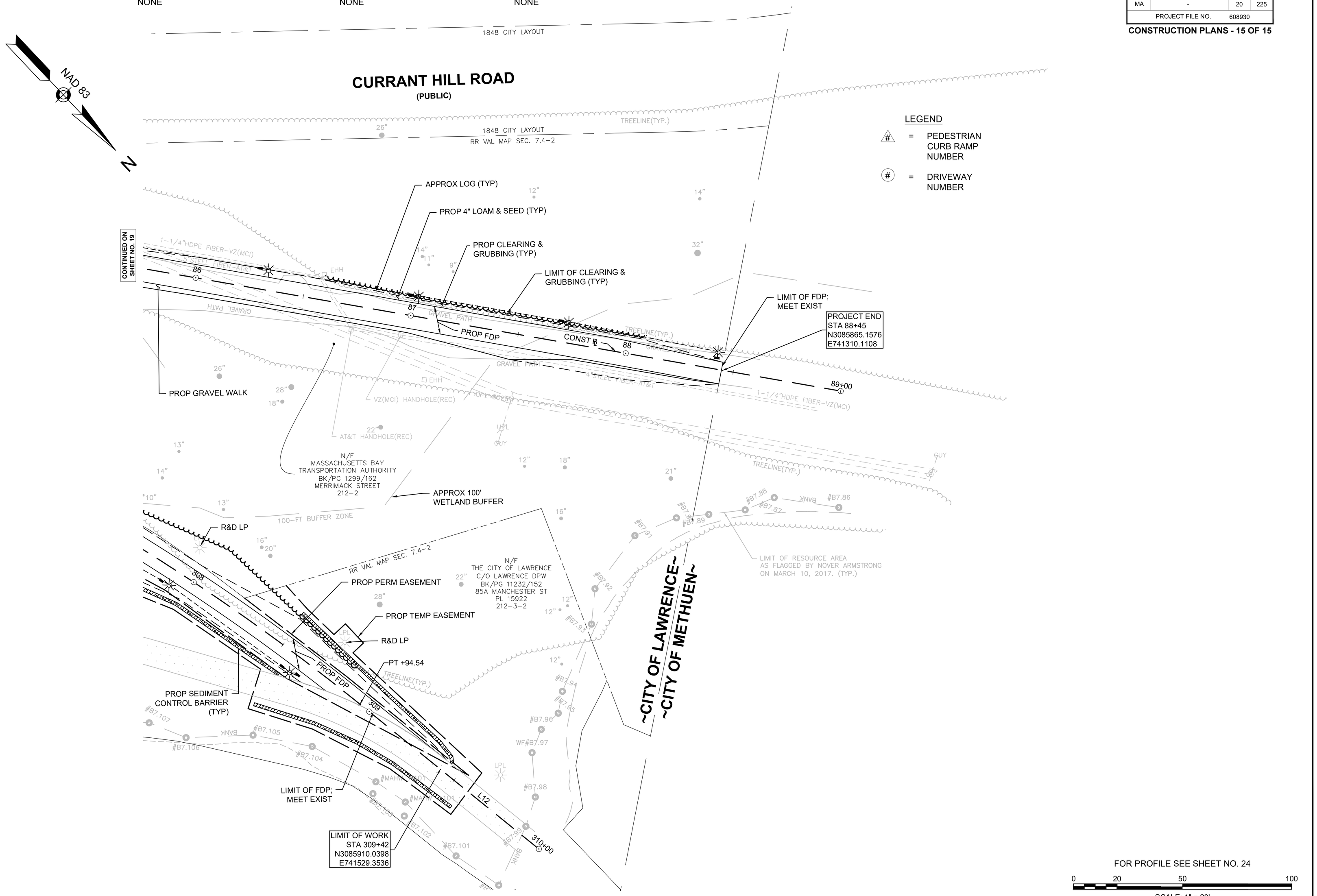

FOR PERMITTING PURPOSES - NOT FOR CONSTRUCTION

A00869 - 39

Proposal No. 608930-128034

608930_HD6(PROFILE).DWG Plotted on 28-Oct-2022 4:08 PM

LAWRENCE
LMRC RAIL TRAIL

STATE	FED. AID PROJ. NO.	SHEET NO.	TOTAL SHEETS
MA	-	21	225
	PROJECT FILE NO. 608930		

PROFILES - 1 OF 5

LMRC RAIL TRAIL

HOR. SCALE IN FEET 0 40 80
VER. SCALE IN FEET 0 8 16

CONTINUED ON SHEET NO.22

LOW POINT ELEV = 51.83
LOW POINT STA = 29+91.50
PVI STA = 30+00.00
PVI ELEV = 51.69
A.D. = 1.19%
K = 83.71
100' VC
PVT: 30+50 ELEV: 52.04
PVC: 29+50 ELEV: 51.93
HIGH POINT ELEV = 53.13
HIGH POINT STA = 32+16.11
PVI STA = 32+27.00
PVI ELEV = 53.27
A.D. = -2.19%
K = 27.34
60' VC
521.8' SSD
PVT: 32+57 ELEV: 52.82
PVC: 31+97 ELEV: 53.06
HIGH POINT ELEV = 52.95
HIGH POINT STA = 33+78.10
PVI STA = 33+63.00
PVI ELEV = 53.07
A.D. = -2.00%
K = 30.00
60' VC
569.6' SSD
PVT: 33+93 ELEV: 52.92
PVC: 33+33 ELEV: 52.61
HIGH POINT ELEV = 53.51
HIGH POINT STA = 10+66.79
PVI STA = 10+72.00
PVI ELEV = 53.60
A.D. = -1.20%
K = 50.08
60' VC
930.7' SSD
PVT: 11+02 ELEV: 53.39
PVC: 10+42 ELEV: 53.45
LOW POINT ELEV = 51.57
LOW POINT STA = 3+06.20
PVI STA = 3+15.00
PVI ELEV = 51.46
A.D. = 1.30%
K = 57.53
75' VC
PVT: 3+62.50 ELEV: 51.76
PVC: 2+77.50 ELEV: 51.64
HIGH POINT ELEV = 52.86
HIGH POINT STA = 27+30.24
PVI STA = 27+23.00
PVI ELEV = 53.06
A.D. = -1.10%
K = 136.67
150' VC
1058.3' SSD
PVT: 27+98 ELEV: 52.69
PVC: 26+48 ELEV: 52.61

-0.70%
0.70%
-0.50%
0.80%
0.60%
1.50%
-1.50%
-7.50%
-1.15%
0.90%
7.50%
6.50%

GRADE BREAK STA = 12+39.00
ELEV = 52.42
GRADE BREAK STA = 32+66.00
ELEV = 52.69
GRADE BREAK STA = 25+22.00
ELEV = 51.26
GRADE BREAK STA = 1+28.50
ELEV = 52.04
GRADE BREAK STA = 1+38.00
ELEV = 52.34
GRADE BREAK STA = 1+20.00
ELEV = 51.91
GRADE BREAK STA = 9+96.00 ELEV = 53.22
GRADE BREAK STA = 9+45.50 ELEV = 53.47
GRADE BREAK STA = 8+95.00 ELEV = 53.22
GRADE BREAK STA = 8+44.50 ELEV = 53.47
GRADE BREAK STA = 7+94.00 ELEV = 53.22
GRADE BREAK STA = 7+49.50 ELEV = 53.44
GRADE BREAK STA = 7+05.00 ELEV = 53.22
GRADE BREAK STA = 6+54.00 ELEV = 53.47
GRADE BREAK STA = 6+04.00 ELEV = 53.22
GRADE BREAK STA = 5+61.00 ELEV = 53.44

MATCH EXISTING SIDEWALK PROFILE
EXISTING GROUND
PROPOSED GROUND
LAWRENCE MANCHESTER RAIL TRAIL OVER MERRIMACK RIVER (SEE BRIDGE PLANS)
ESSEX STREET
STA 32+89.30 LAWRENCE RAIL TRAIL B ℄ =
STA 91+36.49 ESSEX STREET B ℄

Benchmark "TBM H"
269F DISC
Elevation = 52.12'
Sta. 33+33.04, 27.68' RT

Benchmark "TBM J"
RR SPIKE IN UP
Elevation = 53.68'
Sta. 2+16.88, 46.25' RT

NAVD 88 BASE ELEV 30.00

FOR PERMITTING PURPOSES - NOT FOR CONSTRUCTION

608930_HD6(PROFILE).DWG Plotted on 28-Oct-2022 4:09 PM

LAWRENCE
LMRC RAIL TRAIL

STATE	FED. AID PROJ. NO.	SHEET NO.	TOTAL SHEETS
MA	-	22	225
	PROJECT FILE NO. 608930		

PROFILES - 2 OF 5

LMRC RAIL TRAIL

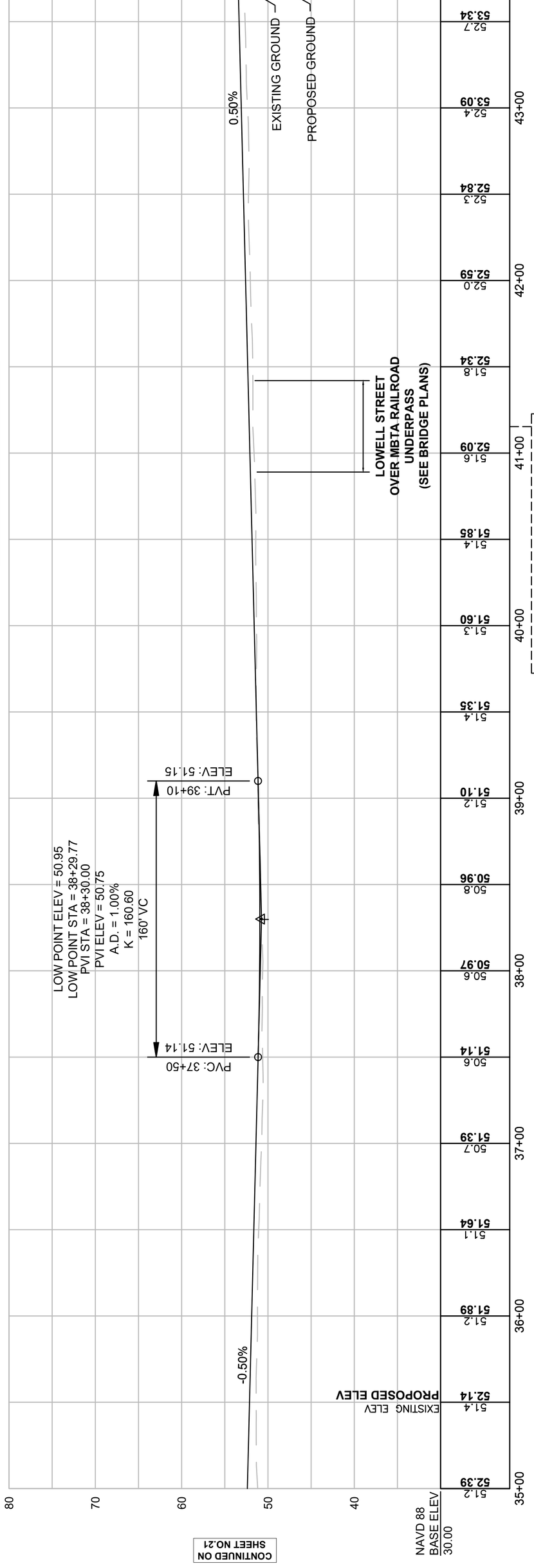

LMRC RAIL TRAIL

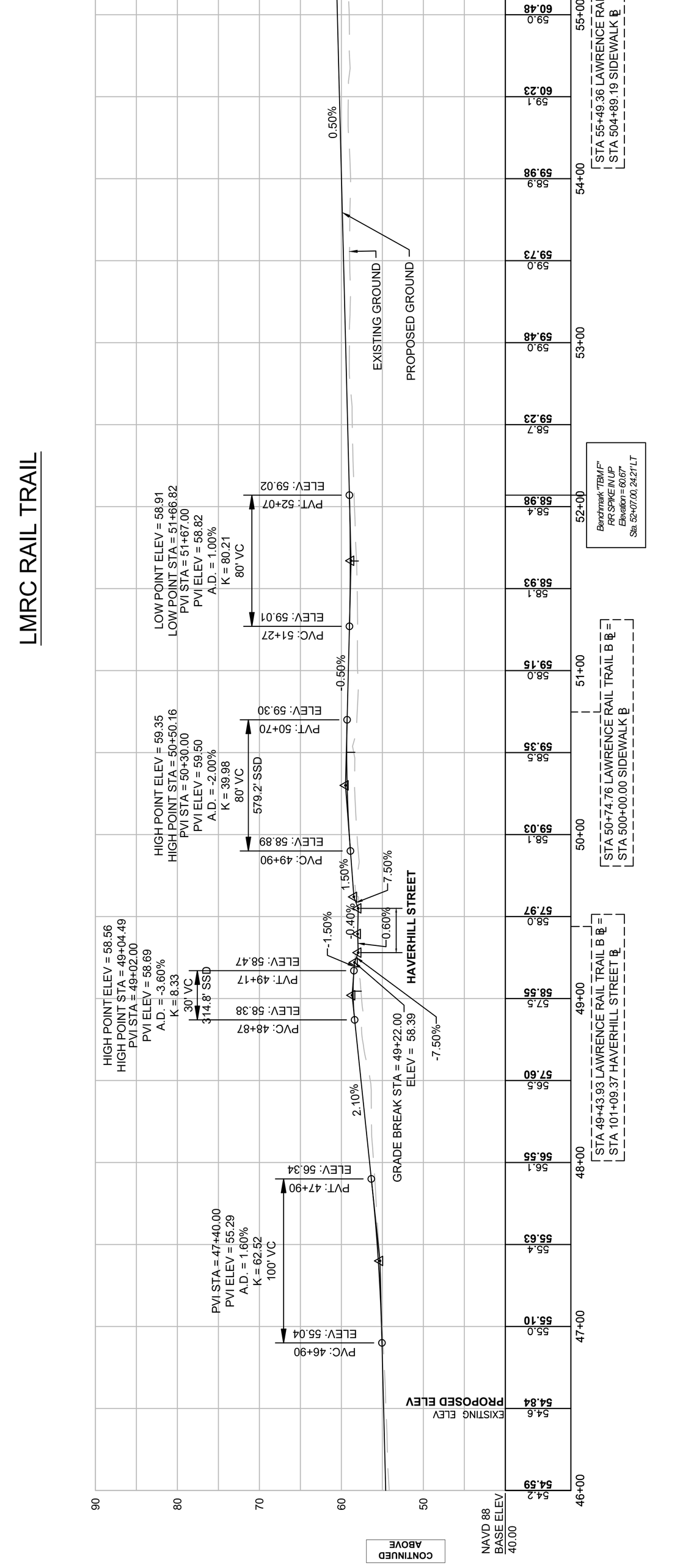

FOR PERMITTING PURPOSES - NOT FOR CONSTRUCTION

608930_HD6(PROFILE).DWG Plotted on 28-Oct-2022 4:09 PM

LAWRENCE
LMRC RAIL TRAIL

STATE	FED. AID PROJ. NO.	SHEET NO.	TOTAL SHEETS
MA	-	23	225
	PROJECT FILE NO.	608930	

PROFILES - 3 OF 5

LMRC RAIL TRAIL

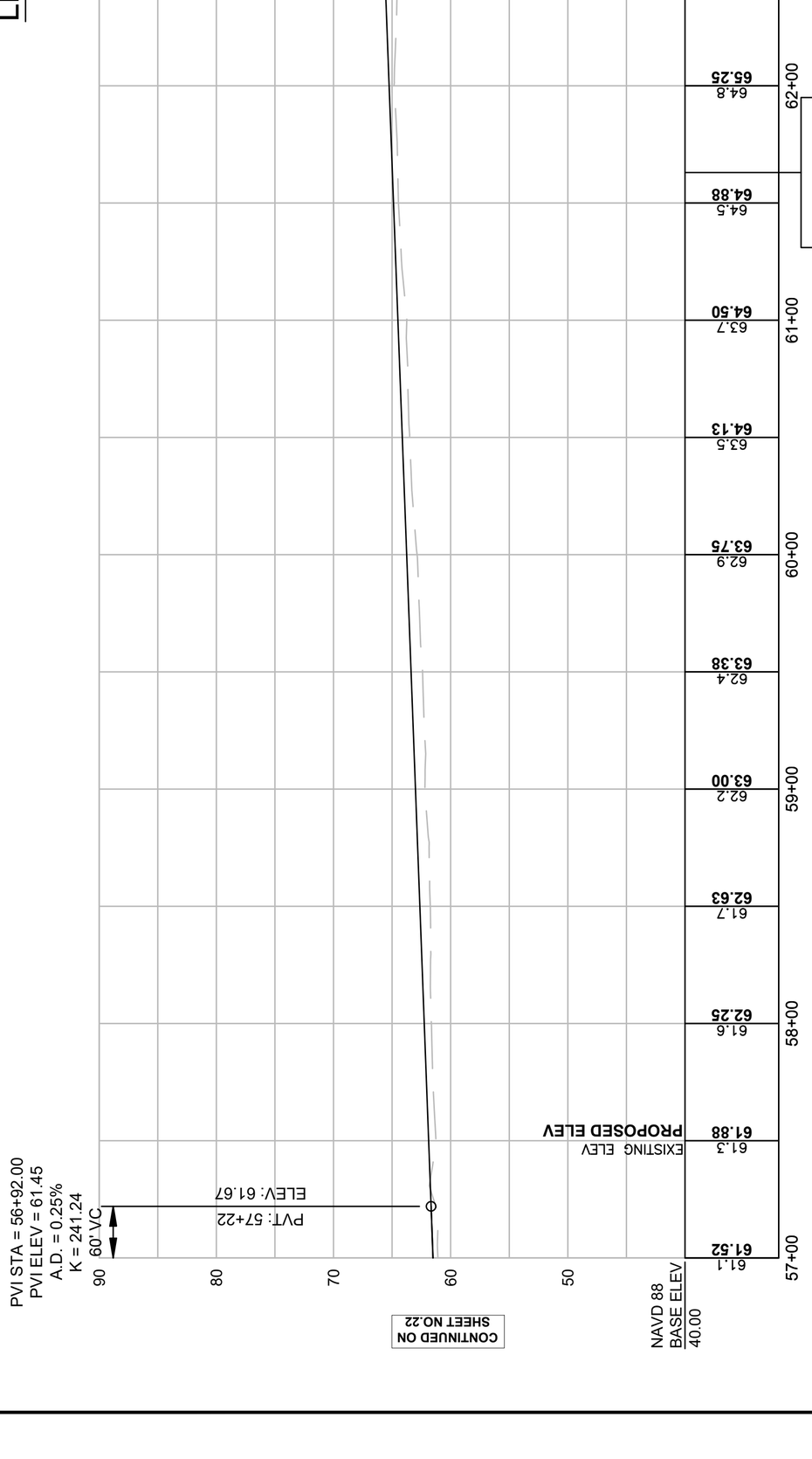

LMRC RAIL TRAIL

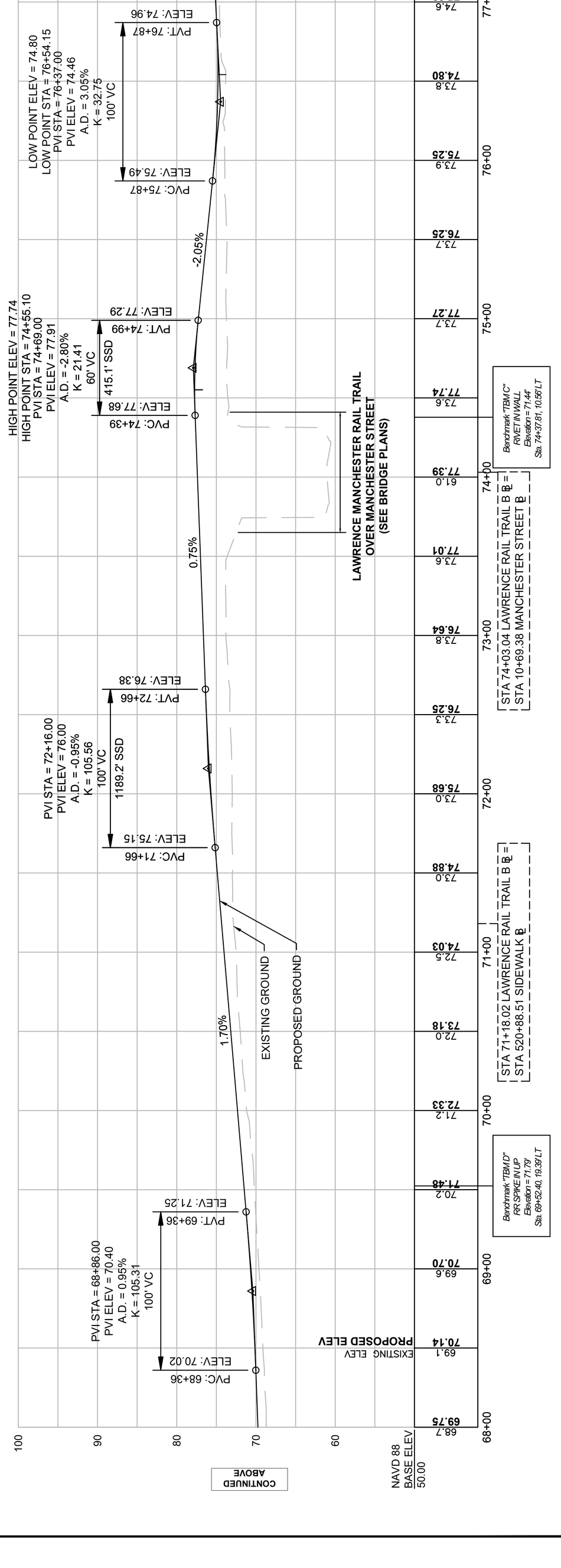

FOR PERMITTING PURPOSES - NOT FOR CONSTRUCTION

LMRC RAIL TRAIL

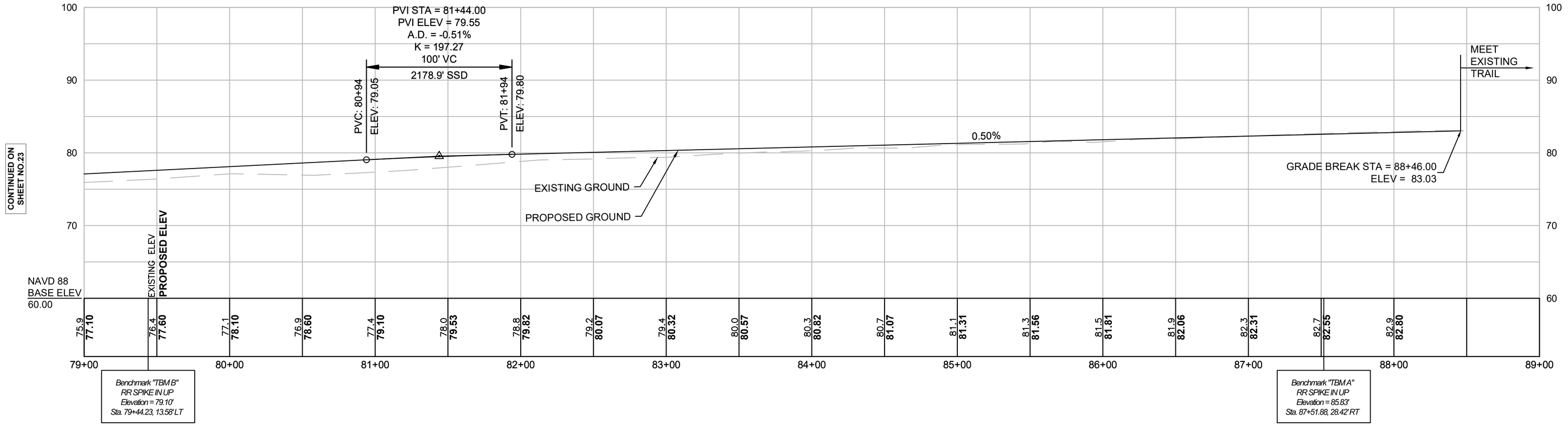

LAWRENCE
LMRC RAIL TRAIL

STATE	FED. AID PROJ. NO.	SHEET NO.	TOTAL SHEETS
MA	-	24	225
PROJECT FILE NO.	608930		

PROFILES - 4 OF 5

608930_HDB(PROFILE).DWG Plotted on 28-Oct-2022 4:10 PM

SPICKET RIVER GREENWAY

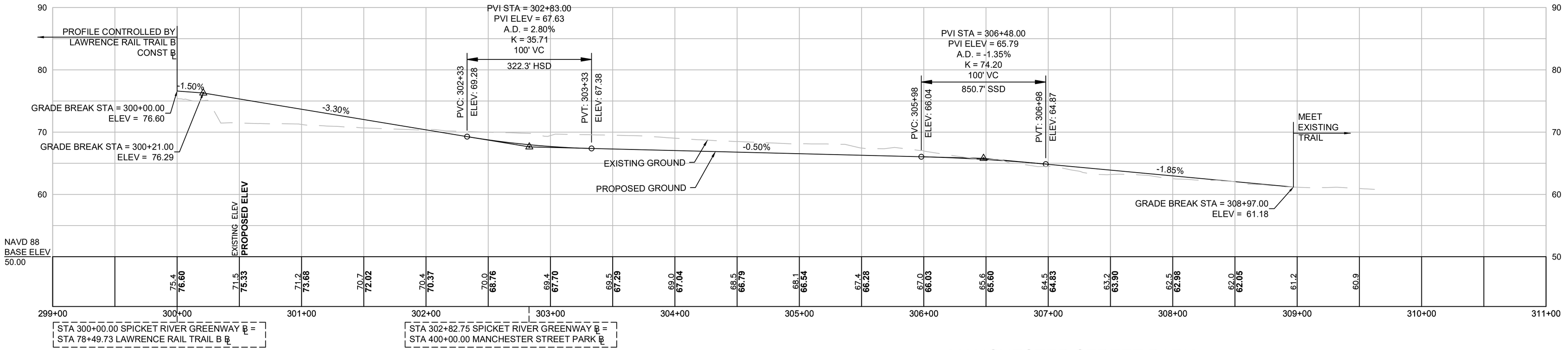

MANCHESTER STREET PARK

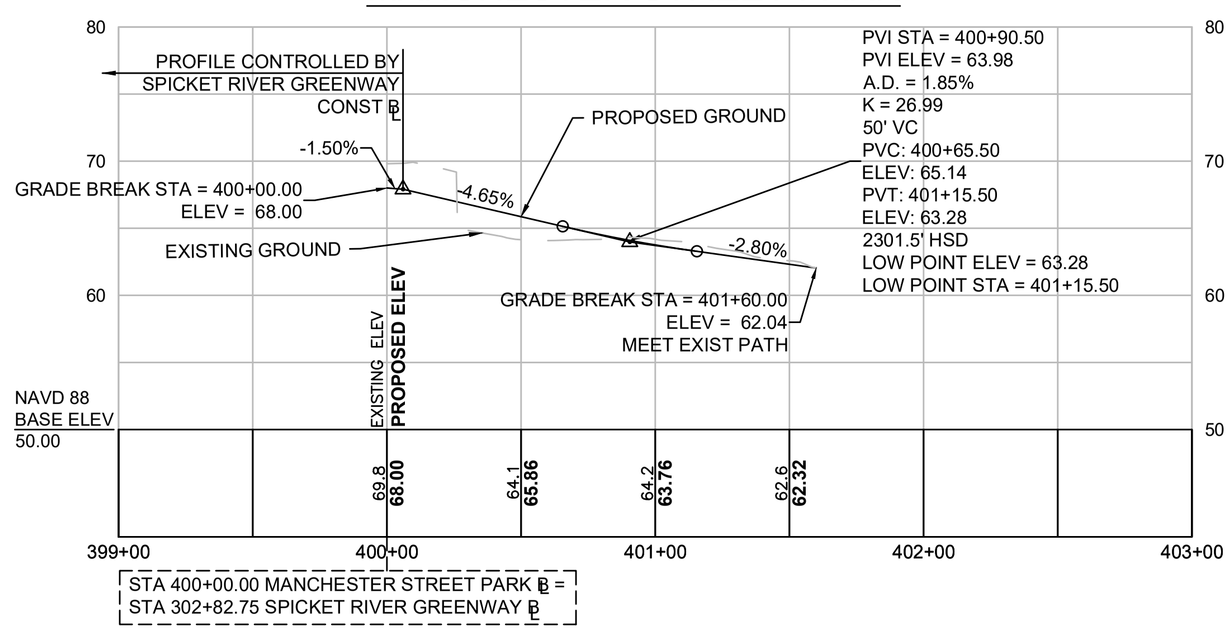

HOR. SCALE IN FEET
40 0 40 80
VER. SCALE IN FEET
8 0 8 16

FOR PERMITTING PURPOSES - NOT FOR CONSTRUCTION

A00869 - 43

Proposal No. 608930-128034

608930_HD6(PROFILE).DWG Plotted on 28-Oct-2022 4:11 PM

LAWRENCE
LMRC RAIL TRAIL

STATE	FED. AID PROJ. NO.	SHEET NO.	TOTAL SHEETS
MA	-	25	225
PROJECT FILE NO. 608930			

PROFILES - 5 OF 5

HOR. SCALE IN FEET 40 8 0 40 80
VER. SCALE IN FEET 8 0 8 16

LOWELL STREET RAMP

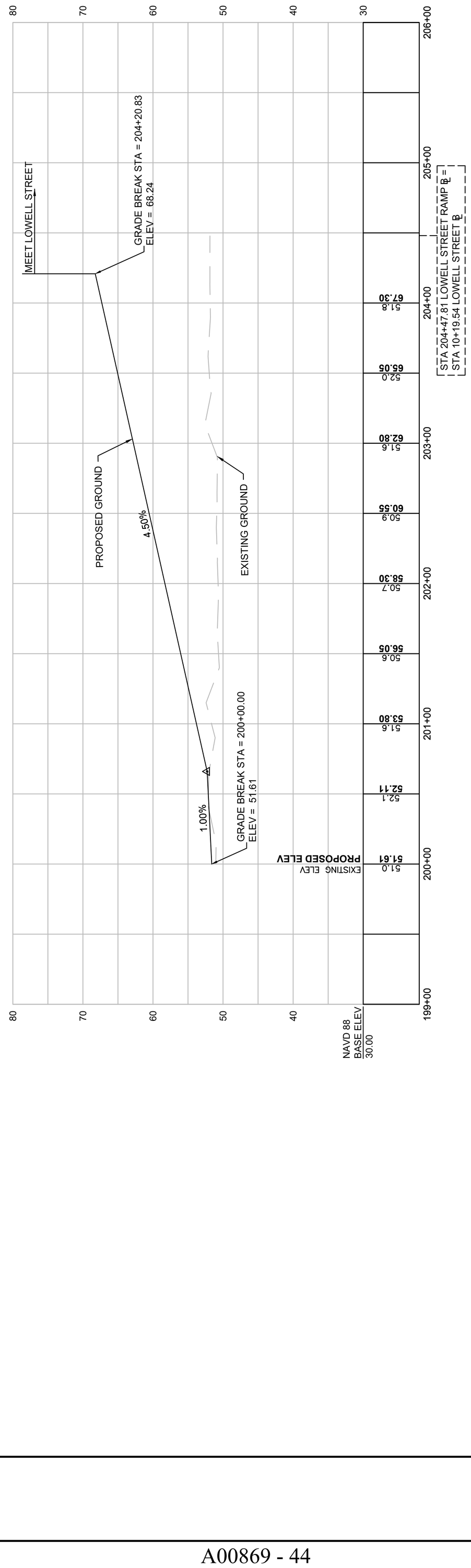

FOR PERMITTING PURPOSES - NOT FOR CONSTRUCTION

608930_HD6A(CURB TIE & GRADING).DWG Plotted on 28-Oct-2022 4:11 PM

LAWRENCE
LMRC RAIL TRAIL

STATE	FED. AID PROJ. NO.	SHEET NO.	TOTAL SHEETS
MA	-	26	225
	PROJECT FILE NO. 608930		

CURB TIE & GRADING PLANS - 1 OF 15

LAWRENCE RAIL TRAIL A CONSTRUCTION BASELINE DATA

NUMBER	STARTING STATION	NORTHING	EASTING	CURVE DATA	LINE DATA	ENDING STATION
L1	1+00.00	3080268.6504	746596.3143		N38°57'26"W 103.93'	2+03.93
C1	2+03.93	3080349.4688	746530.9687	R=150.00' Δ=7°07'55" L=18.67' T=9.35'		2+22.60
C2	2+22.60	3080363.2208	746518.3572	R=150.00' Δ=7°03'09" L=18.46' T=9.24'		2+41.07
L2	2+41.07	3080376.8109	746505.8766		N39°02'12"W 936.40'	11+77.47

Survey Traverse Point Table

Point #	Northing	Easting	Elevation	Raw Description	Station	Offset
1	3080300.0360	746593.3476	52.010	MTRV MAG	1+26.27	17.4' RT
2	3080446.7990	746438.2650	51.350	MTRV MAG	3+38.01	8.4' LT
3	3080483.0240	746268.0820	44.630	MTRV MAG	4+73.33	117.8' LT

SCALE: 1" = 20'

FOR PERMITTING PURPOSES - NOT FOR CONSTRUCTION

608930_HD6A(CURB TIE & GRADING).DWG Plotted on 28-Oct-2022 4:12 PM

LAWRENCE
LMRC RAIL TRAIL

STATE	FED. AID PROJ. NO.	SHEET NO.	TOTAL SHEETS
MA	-	27	225
PROJECT FILE NO. 608930			

CURB TIE & GRADING PLANS - 2 OF 15

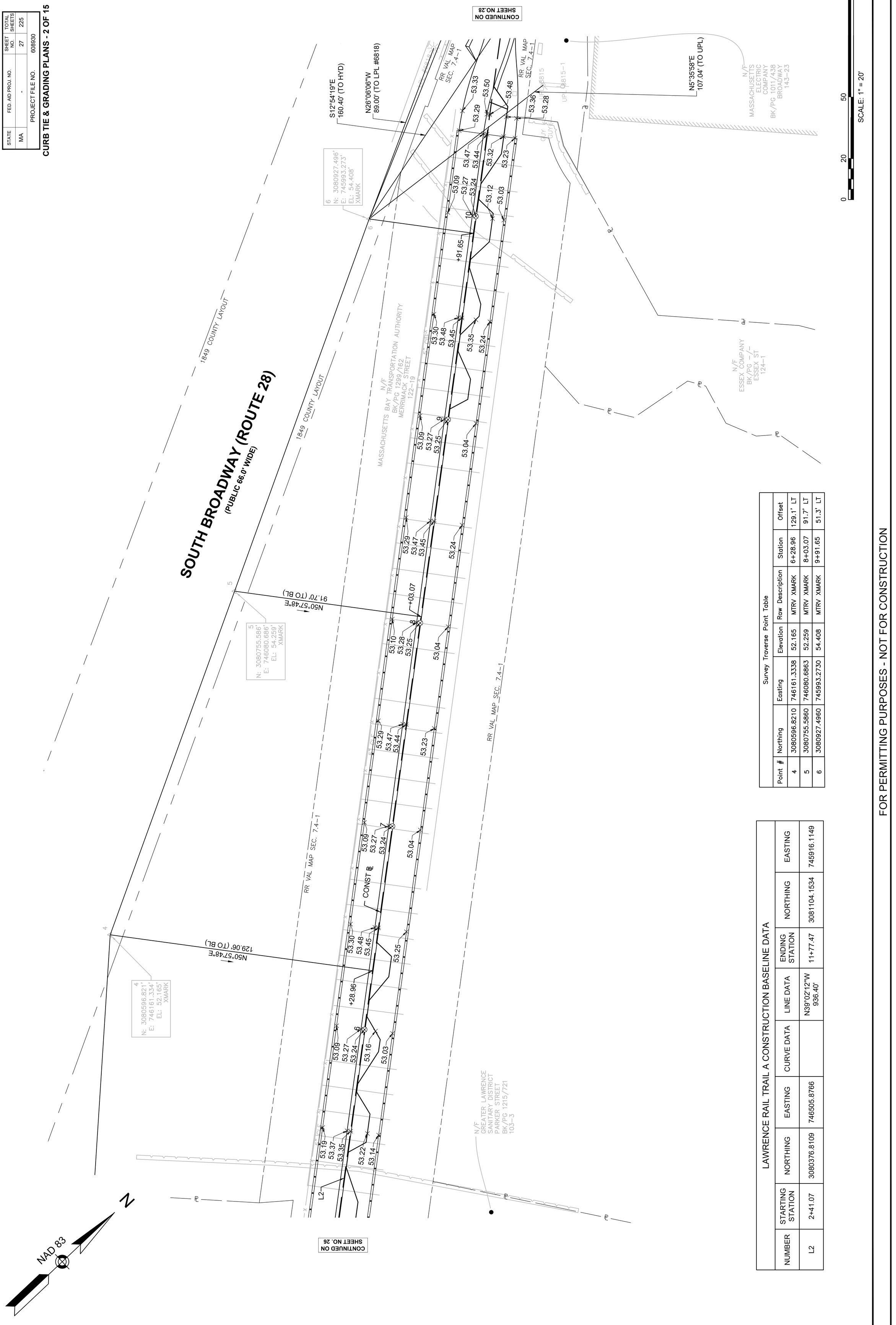

Survey Traverse Point Table

Point #	Northing	Easting	Elevation	Raw Description	Station	Offset
4	3080596.8210	746161.3338	52.165	MTRV XMARK	6+28.96	129.1' LT
5	3080755.5860	746080.6863	52.259	MTRV XMARK	8+03.07	91.7' LT
6	3080927.4960	745993.2730	54.408	MTRV XMARK	9+91.65	51.3' LT

LAWRENCE RAIL TRAIL A CONSTRUCTION BASELINE DATA

NUMBER	STARTING STATION	NORTHING	EASTING	CURVE DATA	LINE DATA	ENDING STATION	NORTHING	EASTING
L2	2+41.07	3080376.8109	746505.8766		N39°02'12"W 936.40'	11+77.47	3081104.1534	745916.1149

FOR PERMITTING PURPOSES - NOT FOR CONSTRUCTION

608930_HD6A(CURB TIE & GRADING).DWG Plotted on 28-Oct-2022 4:12 PM

LAWRENCE
LMRC RAIL TRAIL

STATE	FED. AID PROJ. NO.	SHEET NO.	TOTAL SHEETS
MA	-	28	225
PROJECT FILE NO. 608930			

CURB TIE & GRADING PLANS - 3 OF 15

Survey Traverse Point Table

Point #	Northing	Easting	Elevation	Raw Description	Station	Offset
7	3081092.6600	745916.4718	51.993	MTRV MAG	11+68.31	7.0' LT
8	3081228.0720	745820.2144	51.918	MTRV MAG	13+23.39	61.3' LT
9	3081341.6870	745721.4785	51.102	MTRV MAG	24+77.51	10.5' LT

Curve Table

Curve #	Length	Direction/Delta	Radius	Tangent
C1	21.61'	2°15'57"	546.50'	10.81'
C2	19.16'	7°39'01"	143.50'	9.59'
C3	9.48'	181°05'20"	3.00'	315.68'
C4	9.51'	181°43'11"	3.00'	199.88'
C5	19.49'	44°39'53"	25.00'	10.27'
C6	21.14'	100°56'20"	12.00'	14.54'
C7	6.57'	15°02'51"	25.00'	3.30'
C8	20.48'	78°14'18"	15.00'	12.20'
C9	26.15'	99°52'39"	15.00'	17.84'

LAWRENCE RAIL TRAIL A CONSTRUCTION BASELINE DATA

NUMBER	STARTING STATION	NORTHING	EASTING	CURVE DATA	LINE DATA	ENDING STATION	NORTHING	EASTING
					N39°02'12"W 936.40'	11+77.47	3081104.1534	745916.1149
L2	2+41.07	3080376.8109	746505.8766					
C3	11+77.47	3081104.1534	745916.1149	R=100.00' Δ=25°22'16" L=44.28' T=22.51'		12+21.75	3081143.5099	745896.6201
C4	12+21.75	3081143.5099	745896.6201	R=540.00' Δ=8°13'12" L=77.47' T=38.80'		12+99.22	3081219.8421	745883.7705
C5	12+99.22	3081219.8421	745883.7705	R=150.00' Δ=25°41'10" L=67.25' T=34.20'		13+66.47	3081283.1583	745862.8449
L3	13+66.47	3081283.1583	745862.8449		N31°07'53"W 233.53'	16+00.00	3081483.0595	745742.1067

LAWRENCE RAIL TRAIL B CONSTRUCTION BASELINE DATA

NUMBER	STARTING STATION	NORTHING	EASTING	CURVE DATA	LINE DATA	ENDING STATION	NORTHING	EASTING
					N82°06'01"W 86.09'	25+61.09	3081422.4700	745678.7274
L4	24+75.00	3081410.6377	745764.0002					
C6	25+61.09	3081422.4700	745678.7274	R=100.00' Δ=24°09'20" L=42.16' T=21.40'		26+03.25	3081436.7676	745639.3975
C7	26+03.25	3081436.7676	745639.3975	R=750.00' Δ=21°13'26" L=277.82' T=140.52'		28+81.07	3081623.9846	745436.2814

FOR PERMITTING PURPOSES - NOT FOT CONSTRUCTION

608930_HD6A(CURB TIE & GRADING).DWG Plotted on 28-Oct-2022 4:13 PM

LAWRENCE
LMRC RAIL TRAIL

STATE	FED. AID PROJ. NO.	SHEET NO.	TOTAL SHEETS
MA	-	29	225
PROJECT FILE NO. 608930			

CURB TIE & GRADING PLANS - 4 OF 15

LAWRENCE RAIL TRAIL B CONSTRUCTION BASELINE DATA

NUMBER	STARTING STATION	NORTHING	EASTING	CURVE DATA	LINE DATA	ENDING STATION	NORTHING	EASTING
C7	26+03.25	3081436.7676	745639.3975	R=750.00' Δ=21°13'26" L=277.82' T=140.52'		28+81.07	3081623.9846	745436.2814
C8	28+81.07	3081623.9846	745436.2814	R=750.00' Δ=25°07'34" L=328.90' T=167.14'		32+09.97	3081836.8168	745188.9846

Survey Traverse Point Table

Point #	Northing	Easting	Elevation	Raw Description	Station	Offset
7	3081487.1130	745595.1307	50.761	MTRV MAG	26+69.00	16.5' RT
8	3081637.1840	745434.8868	50.942	MTRV MAG	28+92.38	6.9' RT
9	3081758.7510	745310.5012	51.044	MTRV MAG	30+65.56	2.4' RT

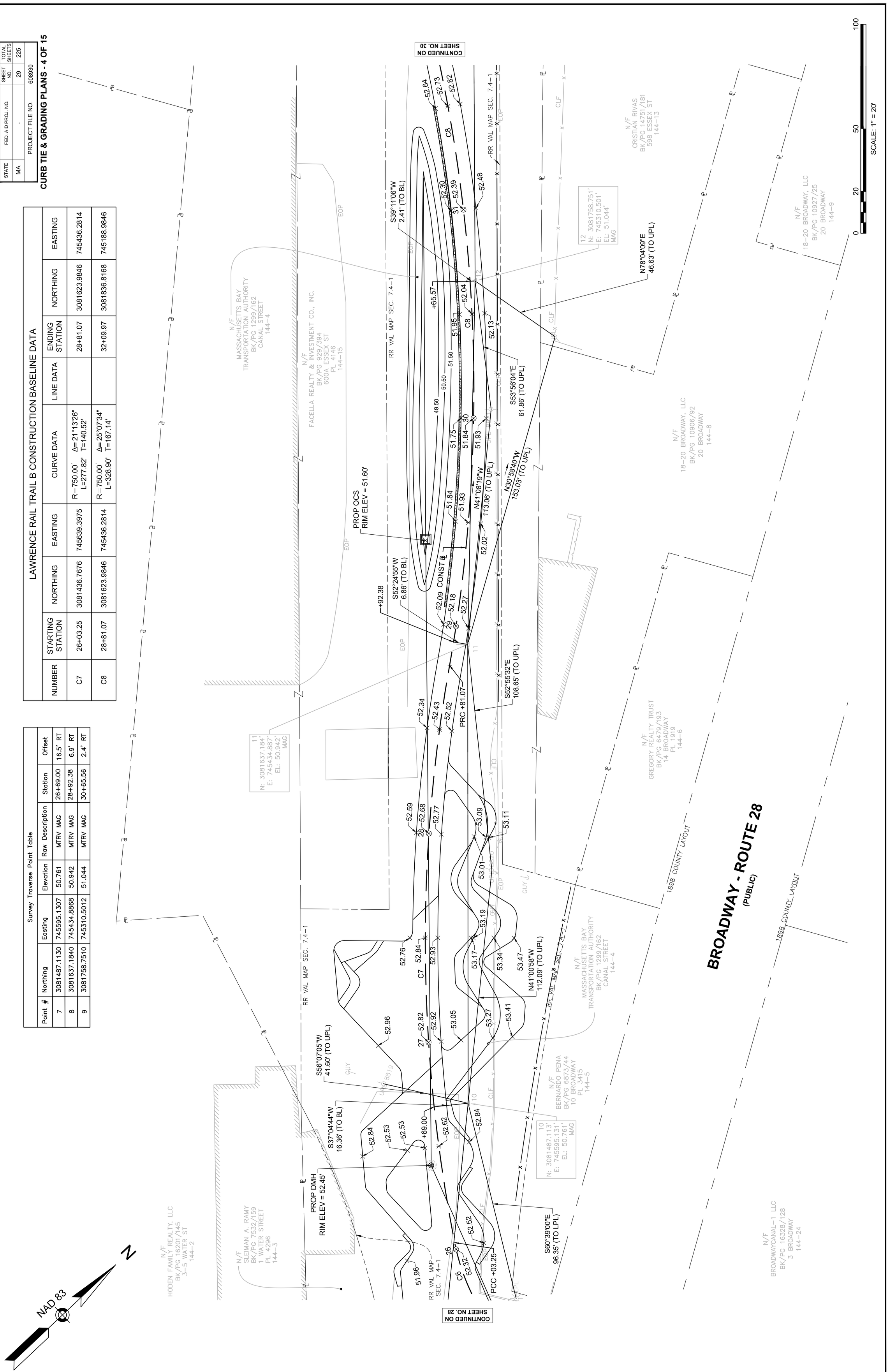

FOR PERMITTING PURPOSES - NOT FOR CONSTRUCTION

608930_HD6A(CURB TIE & GRADING).DWG Plotted on 28-Oct-2022 4:13 PM

Proposal No. 608930-128034

NAD 83

N

Curve Table				
Curve #	Length	Direction/Delta	Radius	Tangent
C10	7.04'	40°18'57"	10.00'	3.67'
C11	7.04'	40°18'54"	10.00'	3.67'
C12	11.20'	53°29'10"	12.00'	6.05'
C13	11.25'	53°43'29"	12.00'	6.08'

Survey Traverse Point Table						
Point #	Northing	Easting	Elevation	Raw Description	Station	Offset
13	3081886.2290	745173.2057	52.210	MTRV MAG	32+61.18	16.3' RT
14	3082030.3490	745019.6666	51.182	MTRV MAG	34+70.59	21.3' RT
15	3082152.2470	744877.9498	50.895	MTRV MAG	36+65.27	23.2' RT

LAWRENCE RAIL TRAIL B CONSTRUCTION BASELINE DATA								
NUMBER	STARTING STATION	NORTHING	EASTING	CURVE DATA	LINE DATA	ENDING STATION	NORTHING	EASTING
C8	28+81.07	3081623.9846	745436.2814	R=750.00' Δ=25°07'34" L=328.90' T=167.14'		32+09.97	3081836.8168	745188.9846
C9	32+09.97	3081836.8168	745188.9846	R=30.00' Δ=30°41'24" L=16.07' T=8.23'		32+26.04	3081847.7460	745177.4669
L5	32+26.04	3081847.7460	745177.4669		N31°09'24"W 120.53'	33+46.58	3081950.8944	745115.1044
C10	33+46.58	3081950.8944	745115.1044	R=45.00' Δ=36°30'42" L=28.68' T=14.84'		33+75.25	3081969.2373	745093.6938
C11	33+75.25	3081969.2373	745093.6938	R=620.00' Δ=30°19'49" L=328.21' T=168.05'		37+03.46	3082166.6962	744836.3289

ESSEX STREET CONSTRUCTION BASELINE DATA								
NUMBER	STARTING STATION	NORTHING	EASTING	CURVE DATA	LINE DATA	ENDING STATION	NORTHING	EASTING
L15	90+00.00	3081831.2745	745027.9321		N58°50'54"E 300.00'	93+00.00	3081986.4665	745284.6721

LOWELL STREET RAMP CONSTRUCTION BASELINE DATA								
NUMBER	STARTING STATION	NORTHING	EASTING	CURVE DATA	LINE DATA	ENDING STATION	NORTHING	EASTING
L16	200+00.00	3082139.1888	744850.7071		N46°37'11"W 447.81'	204+47.81	3082446.7624	744525.2319

ESSEX STREET (PUBLIC - 60.0' WIDE)

1856 CITY LAYOUT

1932 CITY LAYOUT

COMMON STREET (PUBLIC - 60.0' WIDE)

CITY LAYOUT

90+00

93+00

32+89.30 LAWRENCE RAIL TRAIL B= 91+36.49 ESSEX STREET

PT +68.54
OFFSET: 29.11

PRC +70.82
OFFSET: 22.61

PC +73.29
OFFSET: 16.17

PT +26.04

PRC +09.97

PC +46.58

PRC +75.25

PC +15.29
OFFSET: 75.86

PRC +20.82
OFFSET: 85.19

PT +26.35
OFFSET: 94.47

PRC +03.46

S58°50'36"W 16.26' (TO BL)

S75°51'55"E 91.69' (TO UPL)

N11°42'57"W 27.53' (TO TMH)

N44°09'27"E 38.86' (TO UPL)

S71°35'44"W 59.95' (TO UPL)

S31°08'31"W 21.34' (TO BL)

S12°41'11"E 78.90' (TO UPL)

N31°03'52"W 164.40' (TO UPL)

S49°07'59"W 23.20' (TO BL)

S49°17'57"E 186.93' (TO 15)

S64°09'59"E 52.79' (TO UPL)

S45°51'33"E 177.95' (TO 16)

N37°34'21"W 183.38' (TO UPL)

S46°48'45"E 210.58' (TO 14)

S53°25'06"E 60.23' (TO UPL)

BENCHMARK: 26BF DISC
EL=52.12'

13
N: 3081886.229'
E: 745173.206'
EL: 52.210'
MAG

14
N: 3082030.349'
E: 745019.667'
EL: 51.182'
MAG

15
N: 3082152.247'
E: 744877.950'
EL: 50.895'
MAG

N/F
FACELLA REALTY & INVESTMENT
BK/PG 39/557
600 ESSEX ST
144-16

N/F
GANGI REALTY CORPORATION
BK/PG 1617/157
621 ESSEX ST
165-36-B

N/F
GANGI REALTY CORPORATION
BK/PG -/-
19 WINTER STREET
PL 5746
165-33

N/F
CRISTIAN RIVAS
BK/PG 14751/181
598 ESSEX ST
144-13

N/F
ARROW FLOOR & WALL COVERING CO.
BK/PG 1112/450
619 ESSEX STREET
165-37

N/F
JOAQUIN ROSA
BK/PG 9397/270
621 COMMON ST
PL 4211
166-45

N/F
FULTON STREET CORPORATION
BK/PG 3936/289
REAR 92-98 BROADWAY
PL 4226
166-51

N/F
MASSACHUSETTS BAY TRANSPORTATION AUTHORITY
BK/PG 1299/162
LOWELL STREET
166-65

N/F
MCDONALD'S CORPORATION
BK/PG 3122/53
50 BROADWAY
145-1

N/F
AJ WOLF REALTY, LLC
BK/PG 5711/309
613 COMMON STREET
PL 5746
166-47

N/F
CITY OF LAWRENCE
BK/PG -/-
617 COMMON STREET
PL 5746
166-46

CONTINUED ON SHEET NO. 29

CONTINUED ON SHEET NO. 31

0 20 50 100
SCALE: 1" = 20'

FOR PERMITTING PURPOSES - NOT FOR CONSTRUCTION

LAWRENCE
LMRC RAIL TRAIL

STATE	FED. AID PROJ. NO.	SHEET NO.	TOTAL SHEETS
MA	-	31	225
PROJECT FILE NO.	608930		

CURB TIE & GRADING PLANS - 6 OF 15

608930_HD6A(CURB TIE & GRADING).DWG Plotted on 28-Oct-2022 4:14 PM

NAD 83

N

LAWRENCE RAIL TRAIL B CONSTRUCTION BASELINE DATA								
NUMBER	STARTING STATION	NORTHING	EASTING	CURVE DATA	LINE DATA	ENDING STATION	NORTHING	EASTING
C11	33+75.25	3081969.2373	745093.6938	R=620.00' Δ=30°19'49" L=328.21' T=168.05'		37+03.46	3082166.6962	744836.3289
C12	37+03.46	3082166.6962	744836.3289	R=1550.00' Δ=10°00'15" L=270.64' T=135.66'		39+74.09	3082366.4851	744654.2781
L6	39+74.09	3082366.4851	744654.2781		N47°20'32"W 827.94'	48+02.04	3082927.5126	744045.3968

LOWELL STREET RAMP CONSTRUCTION BASELINE DATA								
NUMBER	STARTING STATION	NORTHING	EASTING	CURVE DATA	LINE DATA	ENDING STATION	NORTHING	EASTING
L16	200+00.00	3082139.1888	744850.7071		N46°37'11"W 447.81'	204+47.81	3082446.7624	744525.2319

LOWELL STREET CONSTRUCTION BASELINE DATA								
NUMBER	STARTING STATION	NORTHING	EASTING	CURVE DATA	LINE DATA	ENDING STATION	NORTHING	EASTING
L17	8+00.00	3082332.0715	744338.0310		N58°30'21"E 600.00'	14+00.00	3082645.5191	744849.6466

Survey Traverse Point Table						
Point #	Northing	Easting	Elevation	Raw Description	Station	Offset
16	3082276.1730	744750.2506	50.767	MTRV HT	38+42.52	4.2' RT
17	3082411.3880	744603.4597	51.474	MTRV HT	40+41.89	1.4' LT
18	3082537.1470	744471.2394	52.147	MTRV MAG	42+24.35	1.5' RT

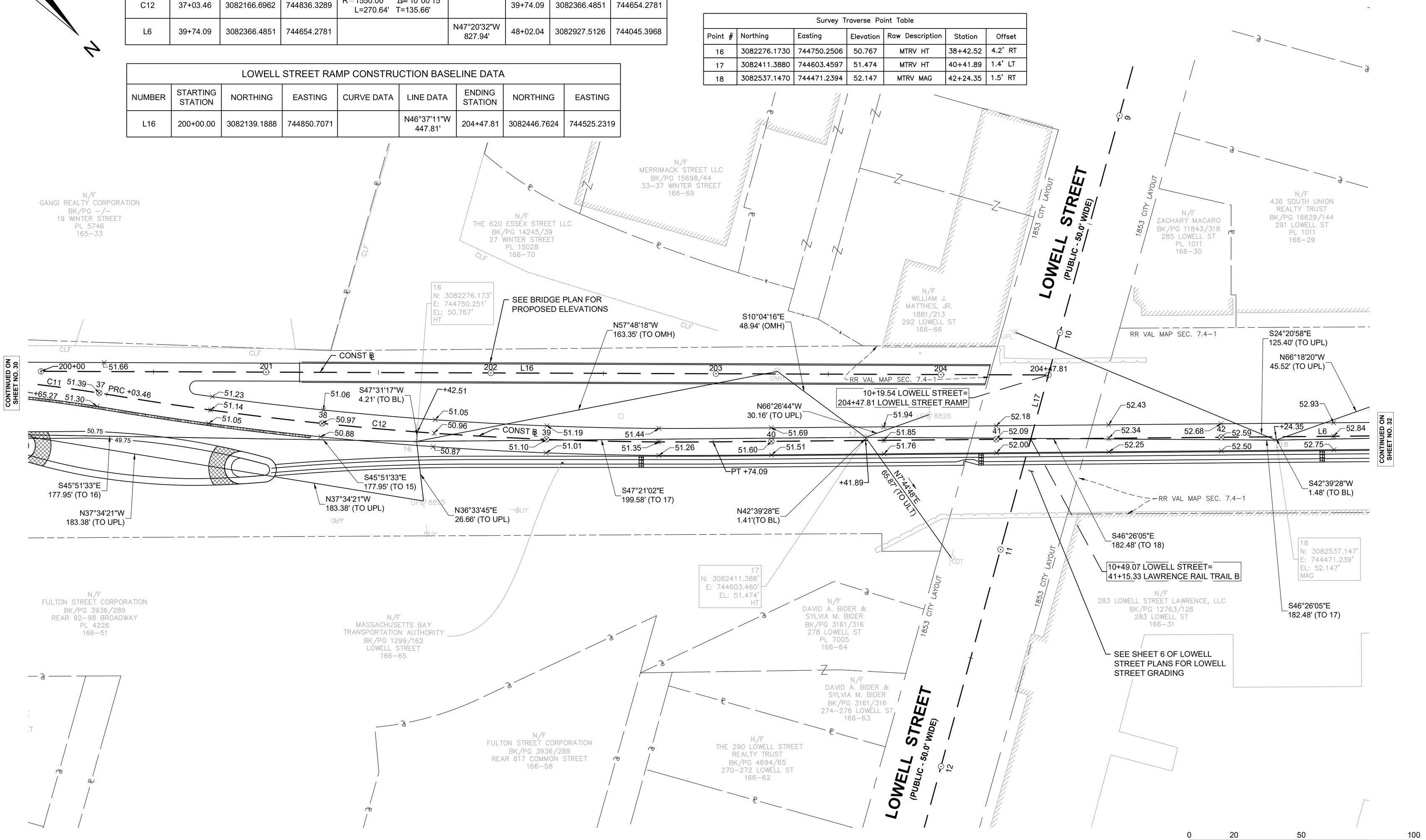

FOR PERMITTING PURPOSES - NOT FOR CONSTRUCTION

608930_HD6A(CURB TIE & GRADING).DWG Plotted on 28-Oct-2022 4:14 PM

LAWRENCE
LMRC RAIL TRAIL

STATE	FED. AID PROJ. NO.	SHEET NO.	TOTAL SHEETS
MA	-	32	225
	PROJECT FILE NO.	608930	

CURB TIE & GRADING PLANS - 7 OF 15

LAWRENCE RAIL TRAIL B CONSTRUCTION BASELINE DATA

NUMBER	STARTING STATION	NORTHING	EASTING	CURVE DATA	LINE DATA	ENDING STATION	NORTHING	EASTING
L6	39+74.09	3082366.4851	744654.2781		N47°20'32"W 827.94'	48+02.04	3082927.5126	744045.3968
C13	48+02.04	3082927.5126	744045.3968	R=140.00' Δ=24°30'41" L=59.89' T=30.41'		48+61.93	3082957.5915	743994.1329

Survey Traverse Point Table

Point #	Northing	Easting	Elevation	Raw Description	Station	Offset
18	3082537.1470	744471.2394	52.147	MTRV MAG	42+24.35	1.5' RT
19	3082659.3320	744336.0777	52.988	MTRV MAG	44+06.54	0.3' LT
20	3082801.6400	744183.0308	54.419	MTRV MAG	46+15.52	0.7' RT

N/F
LAWRENCE HOUSING AUTHORITY
BK/PG -/-
33-47 MORTON ST
166-18

N/F
5-9 MILL STREET, LLC
BK/PG 15947/238
135 BRADFORD
167-1

N/F
DAKE, LLC
BK/PG 9501/326
27-31 MORTON ST
PL 4418
166-19

N/F
GLADYS A. GORDON
BK/PG 15802/220
21 MORTON ST
166-20

N/F
HECTOR B. CHECO
BK/PG 16108/310
17 MORTON ST
166-21

N/F
MASSACHUSETTS BAY TRANSPORTATION AUTHORITY
BK/PG 1299/162
HAVERHILL STREET
167-2

N/F
436 SOUTH UNION REALTY TRUST
BK/PG 16629/144
291 LOWELL ST
PL 1011
166-29

N/F
MONICAH M. MARSH
BK/PG 14131/253
10-14 BRADFORD PLACE
166-40

N/F
CITY OF LAWRENCE
BK/PG 10095/356
8 BRADFORD PLACE
166-41

N/F
283 LOWELL STREET LAWRENCE, LLC
BK/PG 12763/126
283 LOWELL ST
166-31

RR VAL MAP SEC. 7.4-1

RR VAL MAP SEC. 7.4-2

CLF

UPL 8829

UPL 8827

UPL 8228

OLIVER PLACE (PRIVATE)

CLYDE LANE (PRIVATE)

PC +02.04

55.72 55.63 55.54 55.19 55.10 55.01 56.64 56.55 56.46

48 C13 L6

S44°30'32"E 195.51' (TO 21)

S42°39'28"W 0.69' (TO BL)

N73°42'28"W 30.01' (TO UPL)

+15.52

54.68 54.59 54.50 54.43 54.34 54.25 54.93 54.84 54.75

46

S42°14'47"E 159.05' (UPL)

S47°04'56"E 208.99' (TO 20)

54.18 54.09 54.00

45 CONST ℄

N61°57'07"W 52.25' (TO UPL)

53.68 53.59 53.50 53.43 53.34 53.25 53.93 53.84 53.75

+06.54

44

S41°58'46"E 139.75' (TO UPL)

N42°39'28"E 0.25' (TO BL)

S47°53'12"E 182.20' (TO 19)

53.18 53.09 53.00

43

S24°20'58"E 125.40' (TO UPL)

N66°18'20"W 45.52' (TO UPL)

S42°39'28"W 1.48' (TO BL)

S46°26'05"E 182.48' (TO 17)

52.93 52.84 52.75

+24.35 L6

20
N: 3082801.640'
E: 744183.031'
EL: 54.419'
MAG

19
N: 3082659.332'
E: 744336.078'
EL: 52.988'
MAG

18
N: 3082537.147'
E: 744471.239'
EL: 52.147'
MAG

CONTINUED ON SHEET NO. 33

CONTINUED ON SHEET NO. 31

NAD 83

N

0 20 50 100

SCALE: 1" = 20'

FOR PERMITTING PURPOSES - NOT FOR CONSTRUCTION

LAWRENCE
LMRC RAIL TRAIL

STATE	FED. AID PROJ. NO.	SHEET NO.	TOTAL SHEETS
MA	-	33	225
PROJECT FILE NO.	608930		

CURB TIE & GRADING PLANS - 8 OF 15

Plotted on 28-Oct-2022 4:15 PM

608930_HD6A(CURB TIE & GRADING).DWG

Proposal No. 608930-128034

A00869 - 52

NAD 83

N

MORTON STREET
(PUBLIC - 50.0' WIDE)

HAVERHILL STREET - ROUTE 110
(PUBLIC - 50.0' WIDE)

LAWRENCE RAIL TRAIL B CONSTRUCTION BASELINE DATA								
NUMBER	STARTING STATION	NORTHING	EASTING	CURVE DATA	LINE DATA	ENDING STATION	NORTHING	EASTING
L6	39+74.09	3082366.4851	744654.2781		N47°20'32"W 827.94'	48+02.04	3082927.5126	744045.3968
C13	48+02.04	3082927.5126	744045.3968	R=140.00' Δ=24°30'41" L=59.89' T=30.41'		48+61.93	3082957.5915	743994.1329
C14	48+61.93	3082957.5915	743994.1329	R=30.00' Δ=43°26'48" L=22.75' T=11.95'		48+84.68	3082971.8276	743977.0885
L7	48+84.68	3082971.8276	743977.0885		N28°24'24"W 114.36'	49+99.04	3083072.4178	743922.6841
C15	49+99.04	3083072.4178	743922.6841	R=45.00' Δ=40°39'22" L=31.93' T=16.67'		50+30.97	3083093.0388	743899.1830
C16	50+30.97	3083093.0388	743899.1830	R=250.00' Δ=30°49'42" L=134.51' T=68.93'		51+65.48	3083171.8114	743792.1481
C17	51+65.48	3083171.8114	743792.1481	R=750.00' Δ=19°21'21" L=253.37' T=127.90'		54+18.85	3083340.8277	743605.0123

N/F
LAWRENCE HOUSING AUTHORITY
BK/PG -/-
33-47 MORTON ST
166-18

N/F
COLONY REALTY TRUST
BK/PG 10851/161
431 HAVERHILL ST
189-55

N/F
COLONY REALTY TRUST
BK/PG 4648/253
13 RAILROAD ST
189-50

N/F
MASSACHUSETTS ELECTRIC COMPANY
BK/PG 1074/21
425 HAVERHILL ST
PL 5594
189-56

N/F
5-9 MILL STREET, LLC
BK/PG 15947/238
135 BRADFORD
167-1

N/F
BERNARDO PENA
BK/PG 6731/168
413-415 HAVERHILL ST
167-3

N/F
MASSACHUSETTS BAY TRANSPORTATION AUTHORITY
BK/PG 1299/162
MERRIMACK STREET
212-24

N/F
LAWRENCE FAMILY DEVELOPMENT AND EDUCATION FUND, INC.
BK/PG 4309/86
32 WEST STREET
189-58

1846 COUNTY LAYOUT

CITY LAYOUT

RR VAL MAP SEC. 7.4-2

49+43.93 LAWRENCE RAIL TRAIL B=
101+09.37 HAVERHILL STREET

50+74.76 LAWRENCE RAIL TRAIL B=
500+00.00 SIDEWALK

100+00

500+00

PROP CB
RIM ELEV =58.92

PRC +59.43
OFFSET: 19.39

PT +27.93
OFFSET: 26.00

REMOD CB
RIM ELEV =57.97

PRC +29.43
OFFSET: 20.73

PT +30.93
OFFSET: 15.46

PT +84.68

PRC +61.93

PT +30.93
OFFSET: 14.70

PRC +29.18
OFFSET: 20.35

PC +27.43
OFFSET: 26.00

PC +56.93
OFFSET: 12.77

PC +56.93
OFFSET: 12.77

PRC +59.43
OFFSET: 19.39

PT +61.93
OFFSET: 26.00

CIT TO DMH
RIM ELEV = 58.09

PT +61.93
OFFSET: 26.00

PC +99.04

PRC +30.97

S78°23'20"W
27.95' (TO UPL)

S48°59'21"E
191.89' (TO 22)

+10.19

PC +02.04

S44°30'32"E
195.51' (to 20)

S39°19'22"W
10.61' (TO BL)

N35°56'20"W
139.45' (TO UPL)

N25°18'36"W
100.01' (TO EMH)

S38°33'52"W
39.61' (TO TMH)

S42°20'56"E
188.33' (TO UPL)

S47°30'56"E
192.06' (TO 23)

N48°31'34"E
20.88' (TO BL)

S78°19'07"E
64.28' (TO UPL)

S57°20'08"W
17.55' (TO UPL)

N48°41'28"E
9.14' (TO BL)

S48°55'49"E
177.39' (TO 24)

S76°34'04"W
39.33' (TO OMH)

S37°13'26"E
157.83' (TO OMH)

+05.73

+09.30

BENCHMARK: TBM F
EL=60.67'

CONST Ⓟ

PRC +82.22

CONTINUED ON SHEET NO. 32

CONTINUED ON SHEET NO. 34

WOOD FENCE

RAISED LANDSCAPE ISLAND

21
N: 3082941.068'
E: 744045.973'
EL: 55.983'
MAG

22
N: 3083066.986'
E: 743901.176'
EL: 58.047'
XMARK

23
N: 3083196.703'
E: 743759.538'
EL: 58.240'
MAG

Curve Table				
Curve #	Length	Direction/Delta	Radius	Tangent
C14	6.01'	34°24'41"	10.00'	3.10'
C15	6.01'	34°24'41"	10.00'	3.10'
C16	5.55'	31°47'18"	10.00'	2.85'
C17	5.55'	31°47'18"	10.00'	2.85'
C18	7.23'	41°24'35"	10.00'	3.78'
C19	7.23'	41°24'35"	10.00'	3.78'
C20	7.23'	41°24'36"	10.00'	3.78'
C21	7.23'	41°24'36"	10.00'	3.78'

Survey Traverse Point Table						
Point #	Northing	Easting	Elevation	Raw Description	Station	Offset
21	3082941.0680	744045.9728	55.983	MTRV MAG	48+10.19	10.6' RT
22	3083066.9860	743901.1765	58.047	MTRV XMARK	50+09.30	20.9' LT
23	3083196.7030	743759.5381	58.240	MTRV MAG	52+05.73	9.1' LT

HAVERHILL STREET CONSTRUCTION BASELINE DATA								
NUMBER	STARTING STATION	NORTHING	EASTING	CURVE DATA	LINE DATA	ENDING STATION	NORTHING	EASTING
L18	100+00.00	3082971.9151	743852.7045		N61°35'36"E 250.00'	102+50.00	3083090.8472	744072.6025

SIDEWALK CONSTRUCTION BASELINE DATA								
NUMBER	STARTING STATION	NORTHING	EASTING	CURVE DATA	LINE DATA	ENDING STATION	NORTHING	EASTING
C44	500+00.00	3083112.1785	743859.8623	R=100.00' Δ=22°52'38" L=39.93' T=20.23'		500+39.93	3083125.4405	743822.4817
C45	500+39.93	3083125.4405	743822.4817	R=150.00' Δ=54°21'01" L=142.29' T=77.01'		501+82.22	3083204.5575	743710.6188
C46	501+82.22	3083204.5575	743710.6188	R=210.00' Δ=37°46'20" L=138.44' T=71.84'		503+20.66	3083298.2412	743612.1021

0 20 50 100

SCALE: 1" = 20'

FOR PERMITTING PURPOSES - NOT FOR CONSTRUCTION

608930_HD6A(CURB TIE & GRADING).DWG Plotted on 28-Oct-2022 4:15 PM

LAWRENCE
LMRC RAIL TRAIL

STATE	FED. AID PROJ. NO.	SHEET NO.	TOTAL SHEETS
MA	-	34	225
	PROJECT FILE NO. 608930		

CURB TIE & GRADING PLANS - 9 OF 15

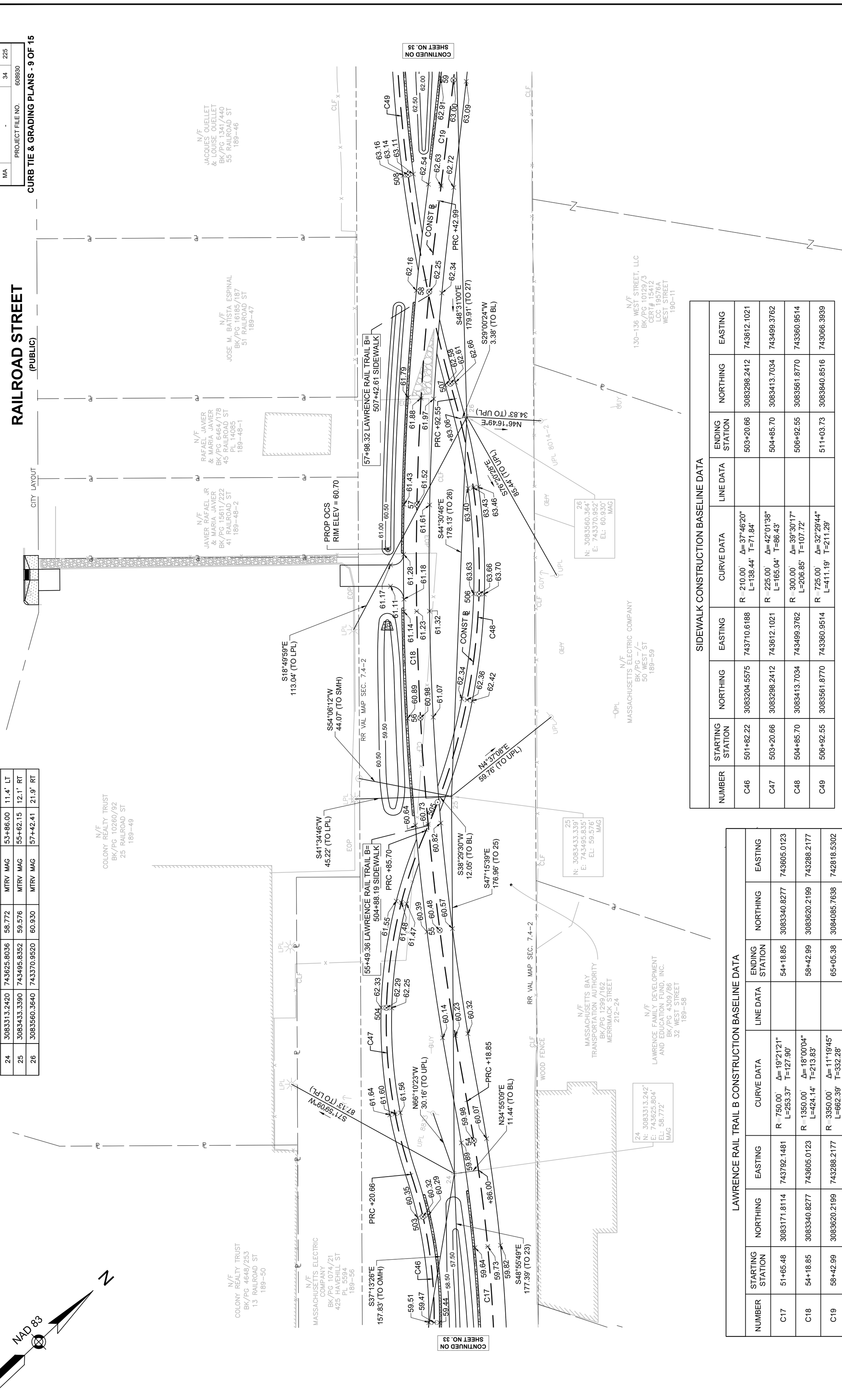

Survey Traverse Point Table

Point #	Northing	Easting	Elevation	Raw Description	Station	Offset
24	3083313.2420	743625.8036	58.772	MTRV MAG	53+86.00	11.4' LT
25	3083433.3390	743495.8352	59.576	MTRV MAG	55+62.15	12.1' RT
26	3083560.3640	743370.9520	60.930	MTRV MAG	57+42.41	21.9' RT

SIDEWALK CONSTRUCTION BASELINE DATA

NUMBER	STARTING STATION	NORTHING	EASTING	CURVE DATA	LINE DATA	ENDING STATION	NORTHING	EASTING
C46	501+82.22	3083204.5575	743710.6188	R=210.00' Δ=37°46'20" L=138.44' T=71.84'		503+20.66	3083298.2412	743612.1021
C47	503+20.66	3083298.2412	743612.1021	R=225.00' Δ=42°01'38" L=165.04' T=86.43'		504+85.70	3083413.7034	743499.3762
C48	504+85.70	3083413.7034	743499.3762	R=300.00' Δ=39°30'17" L=206.85' T=107.72'		506+92.55	3083561.8770	743360.9514
C49	506+92.55	3083561.8770	743360.9514	R=725.00' Δ=32°29'44" L=411.19' T=211.29'		511+03.73	3083840.8516	743066.3939

LAWRENCE RAIL TRAIL B CONSTRUCTION BASELINE DATA

NUMBER	STARTING STATION	NORTHING	EASTING	CURVE DATA	LINE DATA	ENDING STATION	NORTHING	EASTING
C17	51+65.48	3083171.8114	743792.1481	R=750.00' Δ=19°21'21" L=253.37' T=127.90'		54+18.85	3083340.8277	743605.0123
C18	54+18.85	3083340.8277	743605.0123	R=1350.00' Δ=18°00'04" L=424.14' T=213.83'		58+42.99	3083620.2199	743288.2177
C19	58+42.99	3083620.2199	743288.2177	R=3350.00' Δ=11°19'45" L=662.39' T=332.28'		65+05.38	3084085.7638	742818.5302

FOR PERMITTING PURPOSES - NOT FOR CONSTRUCTION

Proposal No. 608930-128034

608930_HD6A(CURB TIE & GRADING).DWG Plotted on 28-Oct-2022 4:16 PM

LAWRENCE
LMRC RAIL TRAIL

STATE	FED. AID PROJ. NO.	SHEET NO.	TOTAL SHEETS
MA	-	35	225
PROJECT FILE NO.	608930		

CURB TIE & GRADING PLANS - 10 OF 15

NAD 83

N

SIDEWALK CONSTRUCTION BASELINE DATA								
NUMBER	STARTING STATION	NORTHING	EASTING	CURVE DATA	LINE DATA	ENDING STATION	NORTHING	EASTING
C49	506+92.55	3083561.8770	743360.9514	R=725.00' Δ=32°29'44" L=411.19' T=211.29'		511+03.73	3083840.8516	743066.3939
C50	511+03.73	3083840.8516	743066.3939	R=30.00' Δ=41°39'06" L=21.81' T=11.41'		511+25.54	3083854.2371	743049.7846
C51	511+25.54	3083854.2371	743049.7846	R=350.00' Δ=36°48'45" L=224.87' T=116.47'		513+50.42	3083985.5415	742871.9873
C52	513+50.42	3083985.5415	742871.9873	R=300.00' Δ=25°03'33" L=131.21' T=66.67'		514+81.62	3084073.1828	742775.7477

RAILROAD STREET
(PUBLIC)

CITY LAYOUT

N/F
JACQUES OUELLET
& LOUISE OUELLET
BK/PG 1341/440
55 RAILROAD ST
189–46

N/F
JOHN SHEA CO
BK/PG –/–
RAILROAD STREET
189–44

N/F
57–71 RAILROAD STREET
CONDOMINIUM
MASTER DEED
BK/PG 3301/42
57–71 RAILROAD STREET
189–1

N/F
SOKIA PHY &
SOPHORN PHY
MASTER DEED
BK/PG 15225/303
73–75 RAILROAD STREET
190–10

N/F
MASSACHUSETTS BAY
TRANSPORTATION AUTHORITY
BK/PG 1299/162
MERRIMACK STREET
212–24

N/F
OBIPIO ORTEGA GONZALES
& LOURDES ORTEGA
BK/PG 16437/50
81 RAILROAD ST
190–8

N/F
JOSHUA V. ARIAS
BK/PG 12921/222
83–87 RAILROAD ST
190–7

N/F
HECTOR R. CID &
ALTAGRACIA CID
BK/PG 13837/207
89 RAILROAD ST
190–6

N/F
MARIA VENTURA
BK/PG 11988/44
91–93 RAILROAD ST
190–5

N/F
HUDELSE O PERALTA
BK/PG 15321/282
97 RAILROAD ST
190–4

N/F
LUZ M. ANDUJAR &
CRITIAN MANUEL GARCIA
BK/PG 10051/321
97 ½ RAILROAD ST
190–3–2

N/F
130–136 WEST STREET, LLC
CERT# 15412
WEST STREET
190–15

N/F
JE ENTERPRISE INC.
BK/PG 15389/123
142 WEST STREET
190–17

N/F
CITY OF LAWRENCE
(SERGEANT LUCIEN E.
BOURGOIN SQUARE PARK)
BK/PG 581/323
BK/PG 650/548
WEST STREET
190–18

BOURGOIN SQUARE PARK

RR VAL MAP SEC. 7.4–2

CLF

VZ(MCI) HANDHOLE(REC)

BENCHMARK: TBM E
EL=65.58'

MCI BOLLARD

CONST ℄

PROP OCS
RIM ELEV = 64.80

27
N: 3083679.539'
E: 743236.169'
EL: 62.172'
HT

28
N: 3083802.262'
E: 743098.613'
EL: 63.510'
MAG

29
N: 3083949.421'
E: 743042.133'
EL: 58.760'
HT

30
N: 3083922.963'
E: 742968.618'
EL: 64.994'
MAG

31
N: 3084085.193'
E: 743087.123'
EL: 56.839'
MAG

32
N: 3084048.750'
E: 742897.919'
EL: 64.202'
MAG

N63°00'12"W
44.50' (TO UPL)

S85°32'19"W
56.35' (TO UPL)

S69°56'34"W
10.81' (TO HH)

S32°37'41"E
150.92' (TO UPL)

S48°15'43"E
184.34' (TO 28)

N49°03'39"E
1.38' (TO BL)

N45°54'48"E
19.85' (TO BL)

N64°49'19"W
37.64' (TO BOLLARD)

N58°43'44"W
58.37' (TO UPL)

S47°07'23"E
177.39' (TO 30)

S41°32'39"E
120.79' (TO UPL)

N42°51'36"E
24.53' (TO BL)

S43°27'57"W
45.18' (TO BL)

N70°10'08"E
78.24' (TO 30)

S42°28'42"W
175.08' (TO BL)

N0°00'00"E
200.90' (TO 31)

N18°18'43"E
142.93' (TO 31)

S83°57'28"E
60.48' (TO 33)

S30°47'56"E
73.23' (TO BOLLARD)

N54°58'49"W
83.54' (TO UPL)

S44°41'48"E
185.94' (TO 33)

N29°18'43"W
144.28' (TO 32)

S40°31'33"W
22.44' (TO BL)

S79°05'56"W
192.61' (TO 31)

N29°18'43"W
144.28' (TO 30)

S79°05'56"W
192.61' (TO 32)

S1°37'52"E
77.90' (TO UPL)

S21°49'52"W
60.91' (TO BOLLARD)

PRC +03.73

PRC +25.54

PRC +50.42

CONTINUED ON SHEET NO. 34

CONTINUED ON SHEET NO. 36

Survey Traverse Point Table						
Point #	Northing	Easting	Elevation	Raw Description	Station	Offset
29	3083949.4210	743042.1332	58.760	MTRV HT	59+21.91	1.4' LT
32	3084048.7500	742897.9187	64.202	MTRV MAG	61+05.93	19.9' LT
31	3084085.1930	743087.1232	56.839	MTRV MAG	62+49.04	45.0' RT
27	3083679.5390	743236.1694	62.172	MTRV HT	62+84.47	24.5' LT
28	3083802.2620	743098.6127	63.510	MTRV MAG	63+06.78	175.1' RT
30	3083922.9630	742968.6185	64.994	MTRV MAG	64+20.95	22.4' RT

LAWRENCE RAIL TRAIL B CONSTRUCTION BASELINE DATA								
NUMBER	STARTING STATION	NORTHING	EASTING	CURVE DATA	LINE DATA	ENDING STATION	NORTHING	EASTING
C19	58+42.99	3083620.2199	743288.2177	R=3350.00' Δ=11°19'45" L=662.39' T=332.28'		65+05.38	3084085.7638	742818.5302

0 20 50 100

SCALE: 1" = 20'

FOR PERMITTING PURPOSES - NOT FOR CONSTRUCTION

608930_HD6A(CURB TIE & GRADING).DWG Plotted on 28-Oct-2022 4:16 PM

LAWRENCE
LMRC RAIL TRAIL

STATE	FED. AID PROJ. NO.	SHEET NO.	TOTAL SHEETS
MA	-	36	225
PROJECT FILE NO. 608930			

CURB TIE & GRADING PLANS - 11 OF 15

Survey Traverse Point Table

Point #	Northing	Easting	Elevation	Raw Description	Station	Offset
33	3084055.1350	742837.8385	68.181	MTRV MAG	64+70.97	11.4' LT
34	3084161.3440	742723.5567	67.184	MTRV MAG	66+26.69	2.8' LT
35	3084282.6950	742587.0537	68.887	MTRV MAG	68+09.22	3.3' LT

LAWRENCE RAIL TRAIL B CONSTRUCTION BASELINE DATA

NUMBER	STARTING STATION	NORTHING	EASTING	CURVE DATA	LINE DATA	ENDING STATION	NORTHING	EASTING
C19	58+42.99	3083620.2199	743288.2177	R = 3350.00' Δ= 11°19'45" L=662.39' T=332.28'		65+05.38	3084085.7638	742818.5302
C20	65+05.38	3084085.7638	742818.5302	R = 4500.00' Δ= 13°25'07" L=1053.90' T=529.37'		75+59.28	3084839.4715	742085.3496

SIDEWALK CONSTRUCTION BASELINE DATA

NUMBER	STARTING STATION	NORTHING	EASTING	CURVE DATA	LINE DATA	ENDING STATION	NORTHING	EASTING
C52	513+50.42	3083985.5415	742871.9873	R = 300.00' Δ= 25°03'33" L=131.21' T=66.67'		514+81.62	3084073.1828	742775.7477
C53	514+81.62	3084073.1828	742775.7477	R = 150.00' Δ= 36°51'31" L=96.50' T=49.98'		515+78.12	3084143.9092	742712.5613
C54	515+78.12	3084143.9092	742712.5613	R = 100.00' Δ= 49°27'53" L=86.33' T=46.06'		516+64.45	3084199.8121	742650.2994
C55	516+64.45	3084199.8121	742650.2994	R = 150.00' Δ= 44°07'59" L=115.54' T=60.81'		517+79.99	3084271.1265	742563.0263
C56	517+79.99	3084271.1265	742563.0263	R = 180.00' Δ= 33°34'19" L=105.47' T=54.30'		518+85.46	3084344.0422	742488.9153
C57	518+85.46	3084344.0422	742488.9153	R = 180.00' Δ= 45°33'07" L=143.11' T=75.58'		520+28.57	3084451.6178	742400.3129

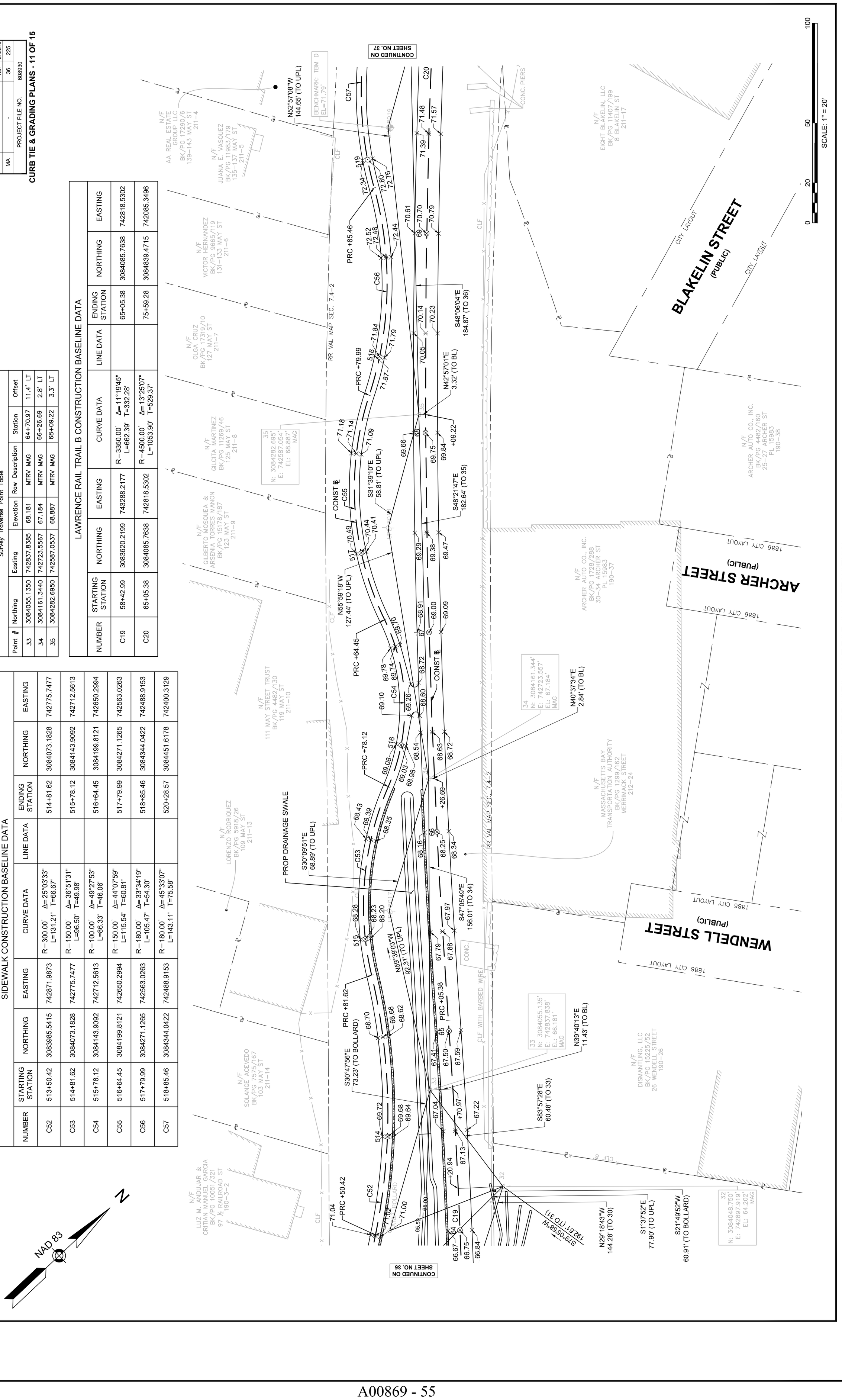

FOR PERMITTING PURPOSES - NOT FOR CONSTRUCTION

608930_HD6A(CURB TIE & GRADING).DWG Plotted on 28-Oct-2022 4:17 PM

LAWRENCE
LMRC RAIL TRAIL

STATE	FED. AID PROJ. NO.	SHEET NO.	TOTAL SHEETS
MA	-	37	225
PROJECT FILE NO. 608930			

CURB TIE & GRADING PLANS - 12 OF 15

MANCHESTER STREET CONSTRUCTION BASELINE DATA

NUMBER	STARTING STATION	NORTHING	EASTING	CURVE DATA	LINE DATA	ENDING STATION	NORTHING	EASTING
L19	10+00.00	3084703.9874	742114.4802		N79°01'21"E 102.51'	11+02.51	3084723.5086	742215.1191
C59	11+02.51	3084723.5086	742215.1191	R =500.00' Δ= 6°50'55" L=59.77' T=29.92'		11+62.28	3084738.3646	742272.9719
L20	11+62.28	3084738.3646	742272.9719		N72°10'26"E 87.72'	12+50.00	3084765.2182	742356.4804

SIDEWALK CONSTRUCTION BASELINE DATA

NUMBER	STARTING STATION	NORTHING	EASTING	CURVE DATA	LINE DATA	ENDING STATION	NORTHING	EASTING
C57	518+85.46	3084344.0422	742488.9153	R = 180.00' Δ= 45°33'07" L=143.11' T=75.58'		520+28.57	3084451.6178	742400.3129
C58	520+28.57	3084451.6178	742400.3129	R = 130.00' Δ= 26°25'05" L=59.94' T=30.51'		520+88.51	3084503.1165	742370.6891

LAWRENCE RAIL TRAIL B CONSTRUCTION BASELINE DATA

NUMBER	STARTING STATION	NORTHING	EASTING	CURVE DATA	LINE DATA	ENDING STATION	NORTHING	EASTING
C20	65+05.38	3084085.7638	742818.5302	R = 4500.00' Δ= 13°25'07" L=1053.90' T=529.37'		75+59.28	3084839.4715	742085.3496

Survey Traverse Point Table

Point #	Northing	Easting	Elevation	Raw Description	Station	Offset
36	3084406.1520	742449.4533	70.818	MTRV MAG	69+93.68	10.5' LT
37	3084534.6160	742325.0425	72.754	MTRV MAG	71+72.07	12.1' LT
38	3084680.2900	742206.3365	73.727	MTRV MAG	73+59.50	5.3' LT

SCALE: 1" = 20'

FOR PERMITTING PURPOSES - NOT FOR CONSTRUCTION

6089301_HD6A(CURB TIE & GRADING).DWG Plotted on 28-Oct-2022 4:17 PM

LAWRENCE
LMRC RAIL TRAIL

STATE	FED. AID PROJ. NO.	SHEET NO.	TOTAL SHEETS
MA	-	38	225
	PROJECT FILE NO. 608930		

CURB TIE & GRADING PLANS - 13 OF 15

MANCHESTER STREET PARK CONSTRUCTION BASELINE DATA

NUMBER	STARTING STATION	NORTHING	EASTING	CURVE DATA	LINE DATA	ENDING STATION	NORTHING	EASTING
L13	400+00.00	3085304.3065	741772.0373		N31°14'40"E 27.18'	400+27.18	3085327.5407	741786.1331
C25	400+27.18	3085327.5407	741786.1331	R=55.00' Δ=73°42'47" L=70.76' T=41.23'		400+97.94	3085352.1493	741847.3515
L14	400+97.94	3085352.1493	741847.3515		S75°02'33"E 62.06'	401+60.00	3085336.1304	741907.3135

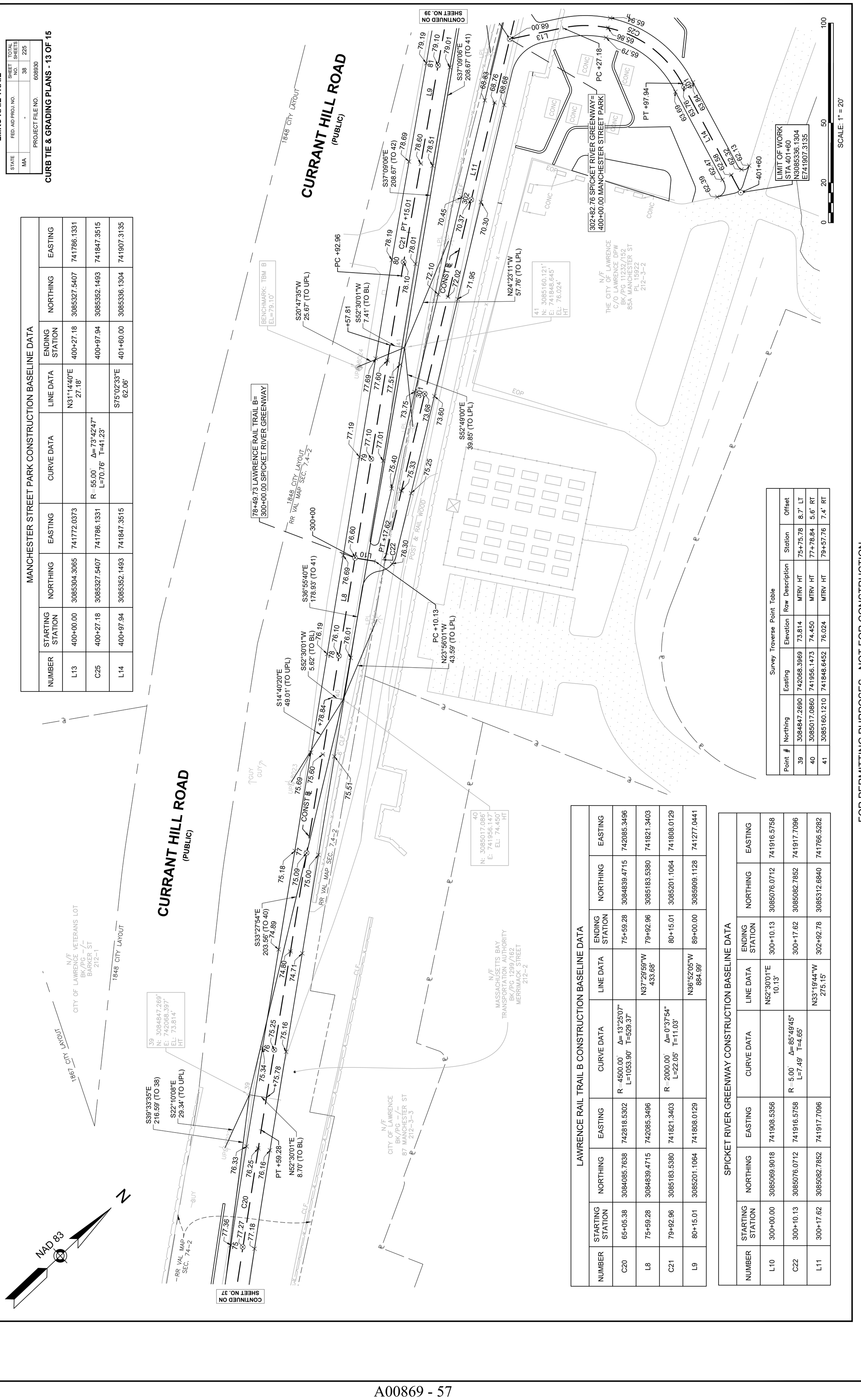

Survey Traverse Point Table

Point #	Northing	Easting	Elevation	Raw Description	Station	Offset
39	3084847.2690	742068.3969	73.814	MTRV HT	75+75.78	8.7' LT
40	3085017.0860	741956.1473	74.450	MTRV HT	77+78.84	5.6' RT
41	3085160.1210	741848.6452	76.024	MTRV HT	79+57.76	7.4' RT

LAWRENCE RAIL TRAIL B CONSTRUCTION BASELINE DATA

NUMBER	STARTING STATION	NORTHING	EASTING	CURVE DATA	LINE DATA	ENDING STATION	NORTHING	EASTING
C20	65+05.38	3084085.7638	742818.5302	R=4500.00' Δ=13°25'07" L=1053.90' T=529.37'		75+59.28	3084839.4715	742085.3496
L8	75+59.28	3084839.4715	742085.3496		N37°29'59"W 433.68'	79+92.96	3085183.5380	741821.3403
C21	79+92.96	3085183.5380	741821.3403	R=2000.00' Δ=0°37'54" L=22.05' T=11.03'		80+15.01	3085201.1064	741808.0129
L9	80+15.01	3085201.1064	741808.0129		N36°52'05"W 884.99'	89+00.00	3085909.1128	741277.0441

SPICKET RIVER GREENWAY CONSTRUCTION BASELINE DATA

NUMBER	STARTING STATION	NORTHING	EASTING	CURVE DATA	LINE DATA	ENDING STATION	NORTHING	EASTING
L10	300+00.00	3085069.9018	741908.5356		N52°30'01"E 10.13'	300+10.13	3085076.0712	741916.5758
C22	300+10.13	3085076.0712	741916.5758	R=5.00' Δ=85°49'45" L=7.49' T=4.65'		300+17.62	3085082.7852	741917.7096
L11	300+17.62	3085082.7852	741917.7096		N33°19'44"W 275.15'	302+92.78	3085312.6840	741766.5282

FOR PERMITTING PURPOSES - NOT FOR CONSTRUCTION

LAWRENCE
LMRC RAIL TRAIL

STATE	FED. AID PROJ. NO.	SHEET NO.	TOTAL SHEETS
MA	-	39	225
PROJECT FILE NO.	608930		

CURB TIE & GRADING PLANS - 14 OF 15

608930_HD6A(CURB TIE & GRADING).DWG Plotted on 28-Oct-2022 4:18 PM

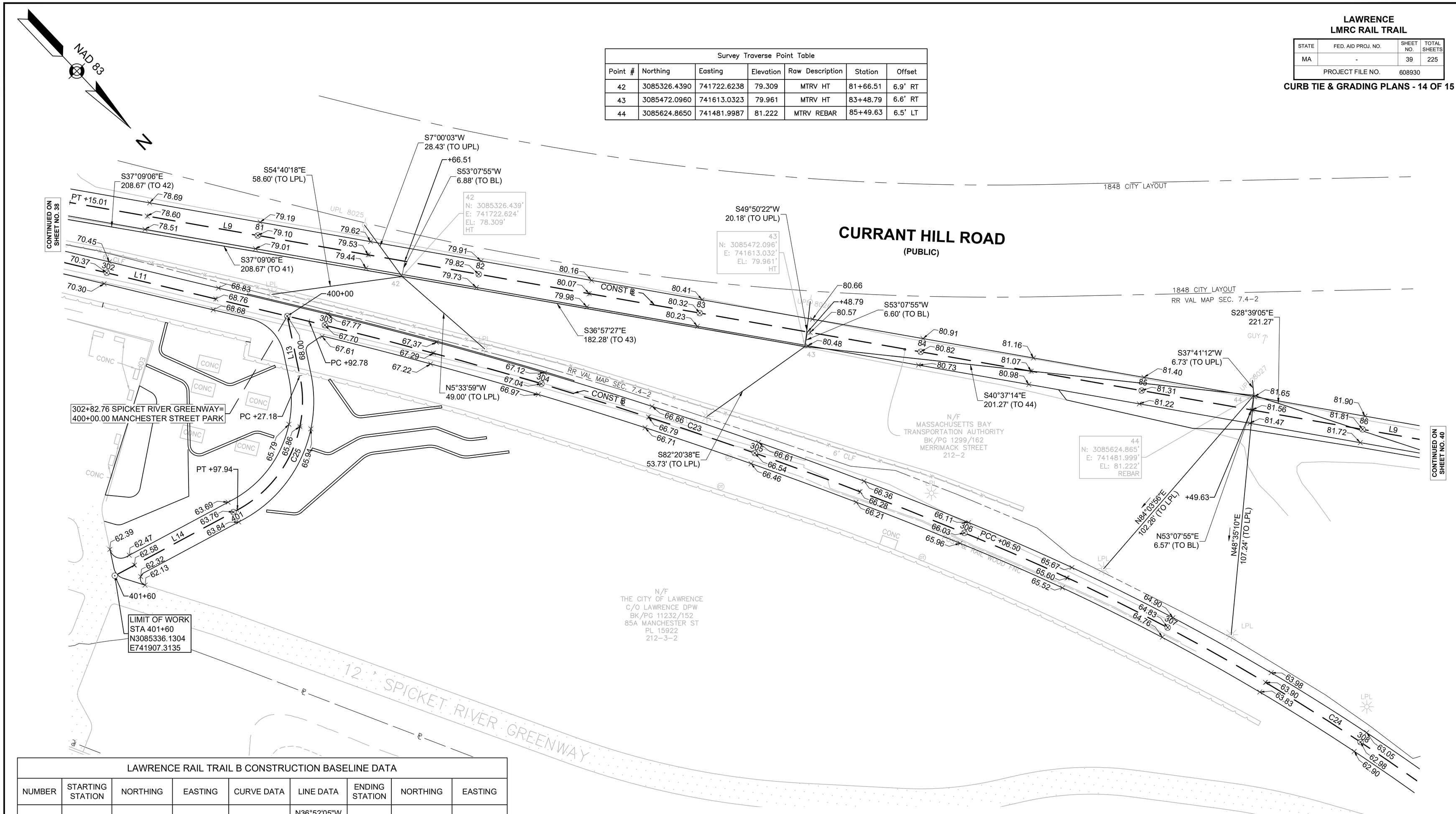

Survey Traverse Point Table						
Point #	Northing	Easting	Elevation	Raw Description	Station	Offset
42	3085326.4390	741722.6238	79.309	MTRV HT	81+66.51	6.9' RT
43	3085472.0960	741613.0323	79.961	MTRV HT	83+48.79	6.6' RT
44	3085624.8650	741481.9987	81.222	MTRV REBAR	85+49.63	6.5' LT

LAWRENCE RAIL TRAIL B CONSTRUCTION BASELINE DATA								
NUMBER	STARTING STATION	NORTHING	EASTING	CURVE DATA	LINE DATA	ENDING STATION	NORTHING	EASTING
L9	80+15.01	3085201.1064	741808.0129		N36°52'05"W 884.99'	89+00.00	3085909.1128	741277.0441

SPICKET RIVER GREENWAY CONSTRUCTION BASELINE DATA								
NUMBER	STARTING STATION	NORTHING	EASTING	CURVE DATA	LINE DATA	ENDING STATION	NORTHING	EASTING
L11	300+17.62	3085082.7852	741917.7096		N33°19'44"W 275.15'	302+92.78	3085312.6840	741766.5282
C23	302+92.78	3085312.6840	741766.5282	R=2000.00' Δ=8°59'15" L=313.72' T=157.18'		306+06.50	3085587.2285	741615.3768
C24	306+06.50	3085587.2285	741615.3768	R=1000.00' Δ=16°30'12" L=288.04' T=145.02'		308+94.54	3085863.0277	741535.8253

MANCHESTER STREET PARK CONSTRUCTION BASELINE DATA								
NUMBER	STARTING STATION	NORTHING	EASTING	CURVE DATA	LINE DATA	ENDING STATION	NORTHING	EASTING
L13	400+00.00	3085304.3065	741772.0373		N31°14'40"E 27.18'	400+27.18	3085327.5407	741786.1331
C25	400+27.18	3085327.5407	741786.1331	R=55.00' Δ=73°42'47" L=70.76' T=41.23'		400+97.94	3085352.1493	741847.3515
L14	400+97.94	3085352.1493	741847.3515		S75°02'33"E 62.06'	401+60.00	3085336.1304	741907.3135

0 20 50 100
SCALE: 1" = 20'

608930_HD6A(CURB TIE & GRADING).DWG Plotted on 28-Oct-2022 4:18 PM

Proposal No. 608930-128034

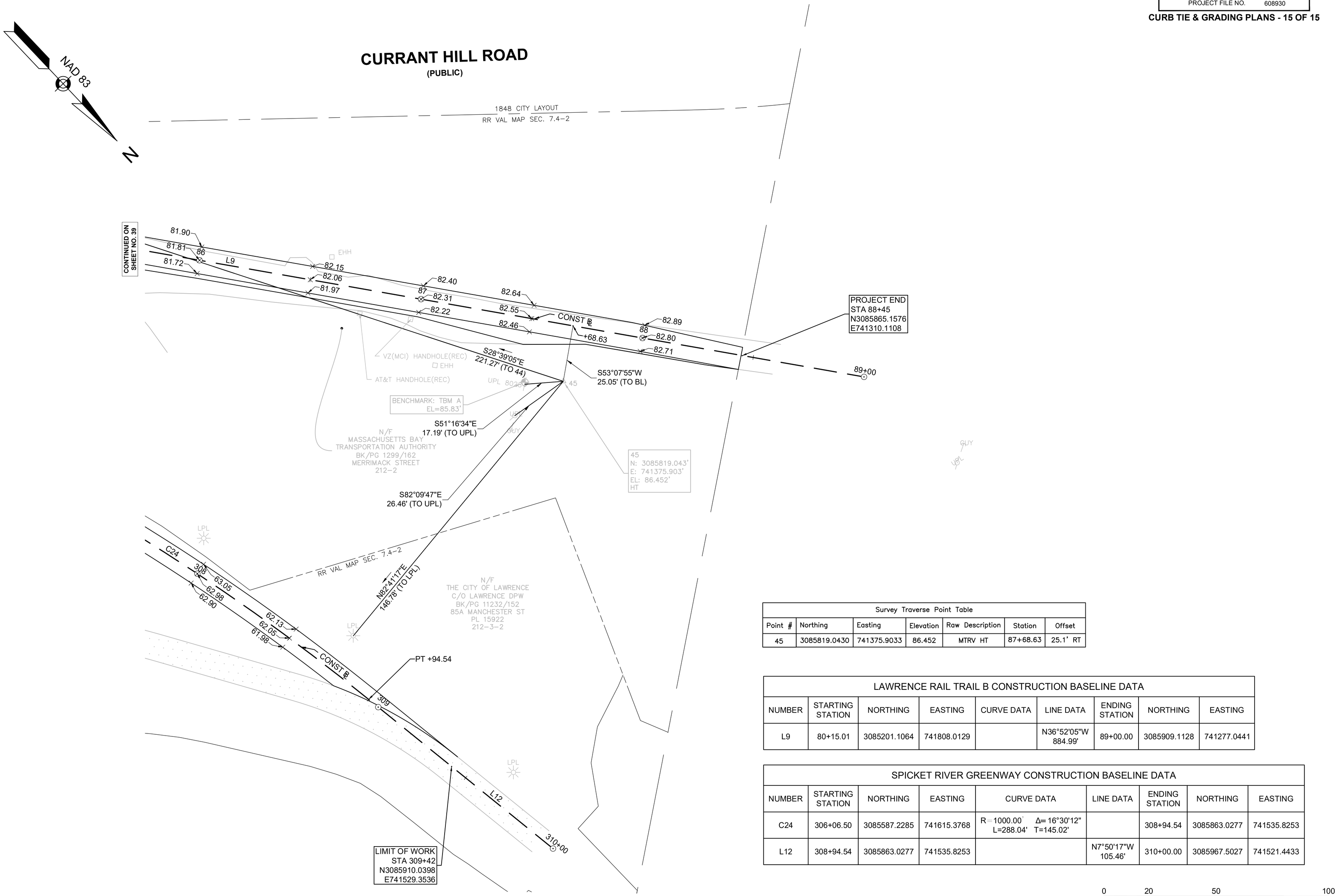

Survey Traverse Point Table						
Point #	Northing	Easting	Elevation	Raw Description	Station	Offset
45	3085819.0430	741375.9033	86.452	MTRV HT	87+68.63	25.1' RT

LAWRENCE RAIL TRAIL B CONSTRUCTION BASELINE DATA								
NUMBER	STARTING STATION	NORTHING	EASTING	CURVE DATA	LINE DATA	ENDING STATION	NORTHING	EASTING
L9	80+15.01	3085201.1064	741808.0129		N36°52'05"W 884.99'	89+00.00	3085909.1128	741277.0441

SPICKET RIVER GREENWAY CONSTRUCTION BASELINE DATA								
NUMBER	STARTING STATION	NORTHING	EASTING	CURVE DATA	LINE DATA	ENDING STATION	NORTHING	EASTING
C24	306+06.50	3085587.2285	741615.3768	R=1000.00' Δ=16°30'12" L=288.04' T=145.02'		308+94.54	3085863.0277	741535.8253
L12	308+94.54	3085863.0277	741535.8253		N7°50'17"W 105.46'	310+00.00	3085967.5027	741521.4433

0 20 50 100
SCALE: 1" = 20'

608930_HD7(TSPM).DWG Plotted on 28-Oct-2022 4:19 PM

LAWRENCE
LMRC RAIL TRAIL

STATE	FED. AID PROJ. NO.	SHEET NO.	TOTAL SHEETS
MA	-	41	225
PROJECT FILE NO.	608930		

TRAFFIC SIGN & PAVEMENT MARKING PLANS - 1 OF 7

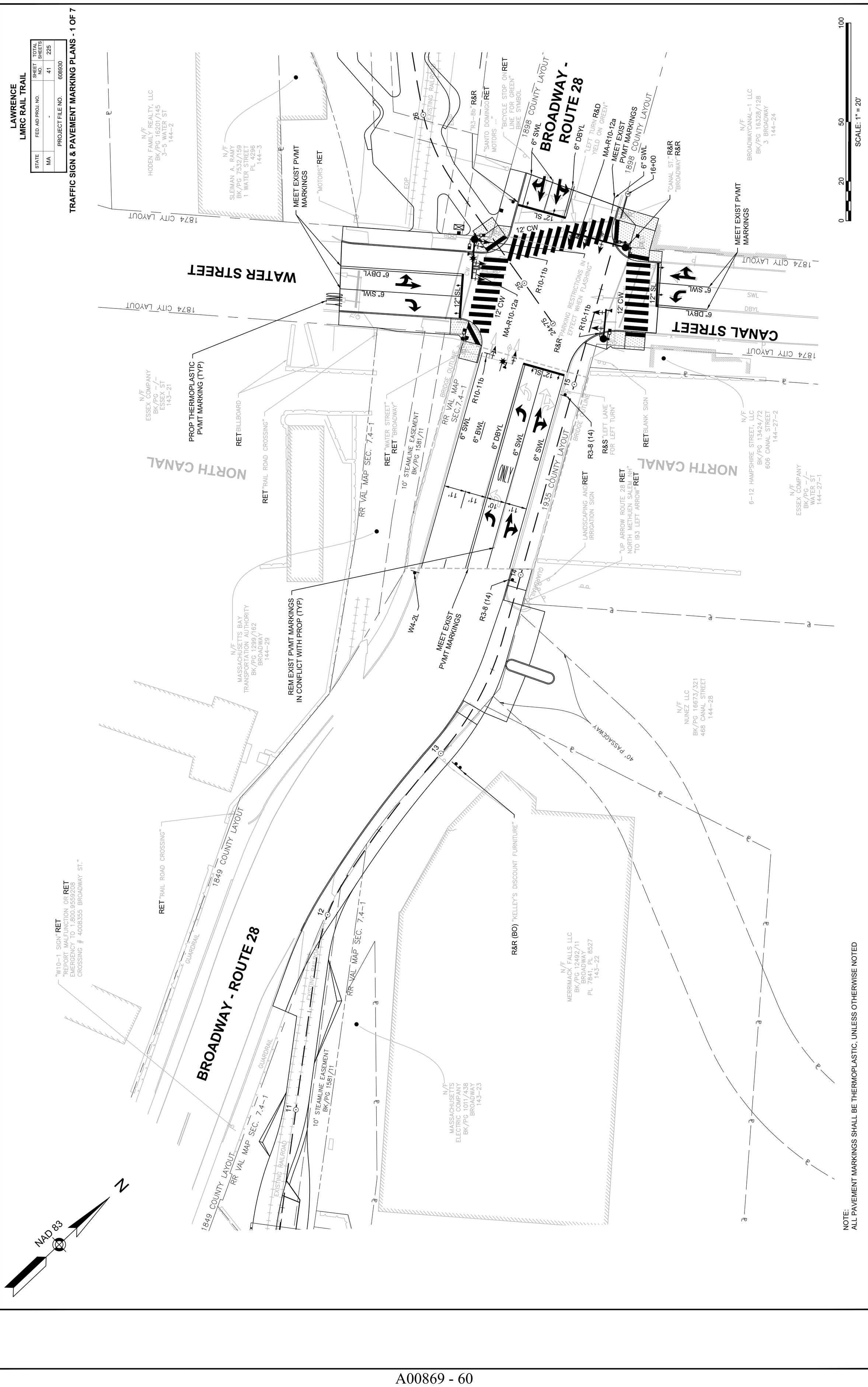

NOTE:
ALL PAVEMENT MARKINGS SHALL BE THERMOPLASTIC, UNLESS OTHERWISE NOTED

FOR PERMITTING PURPOSES - NOT FOR CONSTRUCTION

608930_HD7(TSPM).DWG Plotted on 28-Oct-2022 4:19 PM

LAWRENCE
LMRC RAIL TRAIL

STATE	FED. AID PROJ. NO.	SHEET NO.	TOTAL SHEETS
MA	-	42	225
PROJECT FILE NO. 608930			

TRAFFIC SIGN & PAVEMENT MARKING PLANS - 2 OF 7

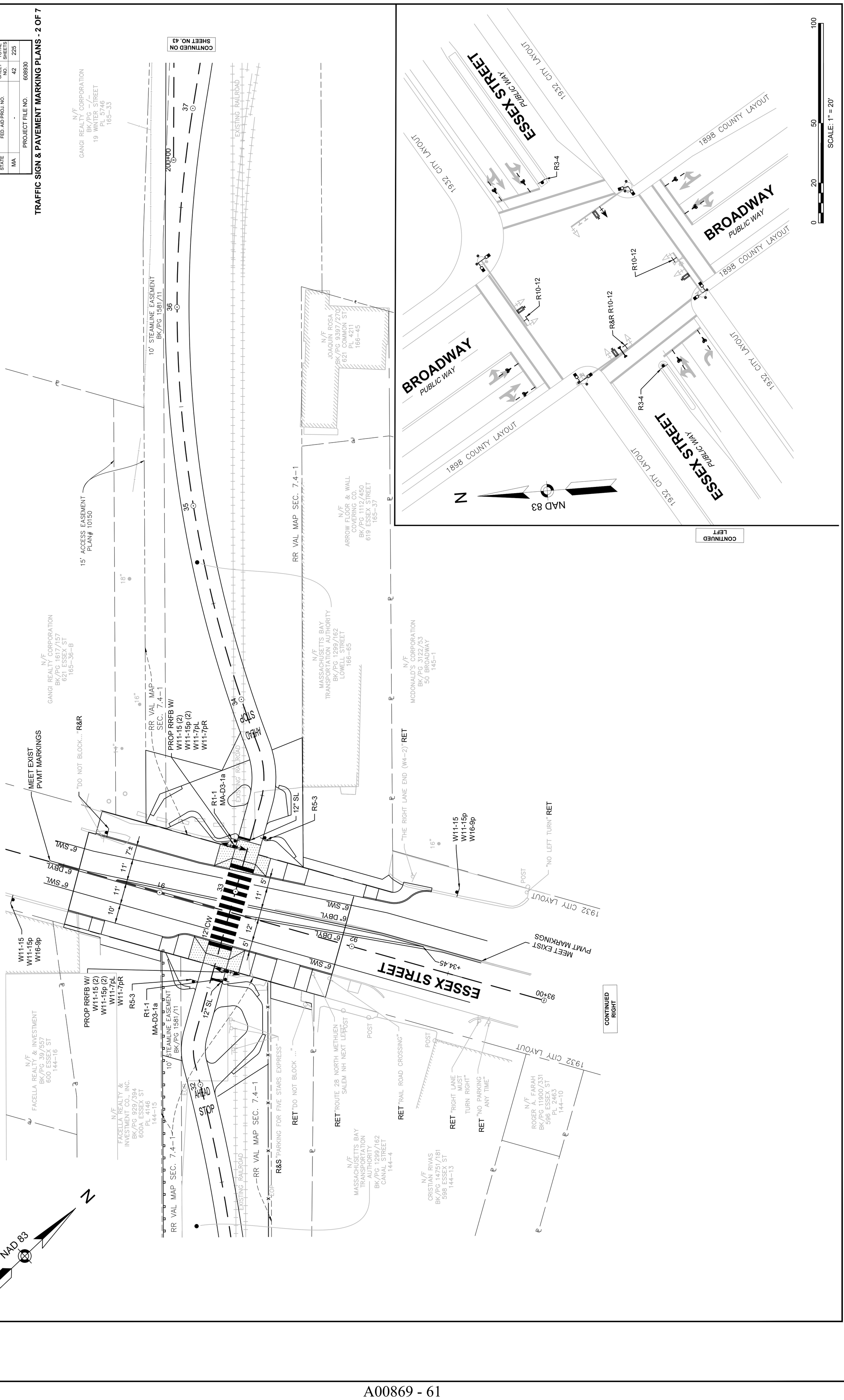

FOR PERMITTING PURPOSES - NOT FOR CONSTRUCTION

608930_HD7(TSPM).DWG Plotted on 28-Oct-2022 4:19 PM

LAWRENCE
LMRC RAIL TRAIL

STATE	FED. AID PROJ. NO.	SHEET NO.	TOTAL SHEETS
MA	-	43	225
	PROJECT FILE NO. 608930		

TRAFFIC SIGN & PAVEMENT MARKING PLANS - 3 OF 7

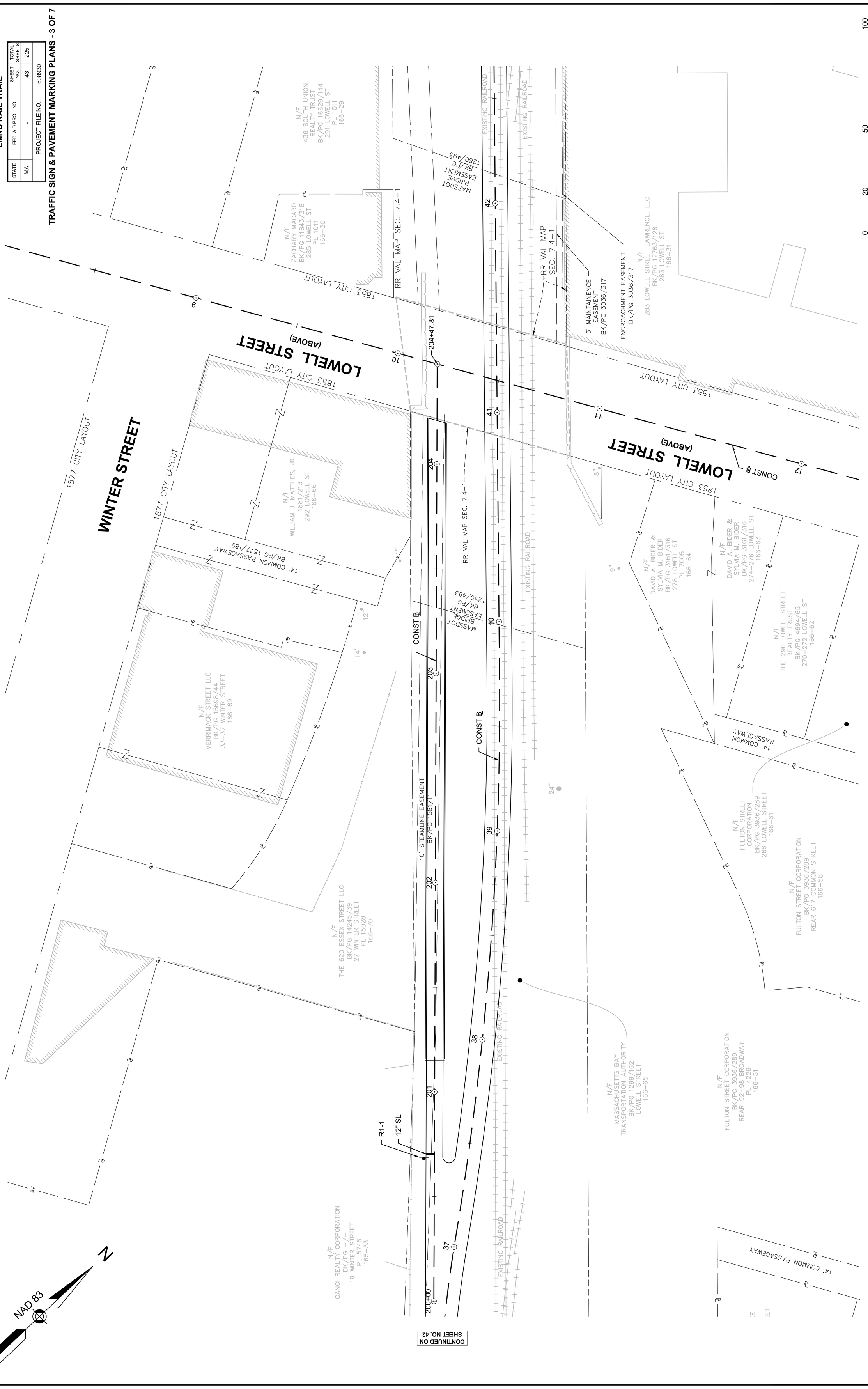

FOR PERMITTING PURPOSES - NOT FOR CONSTRUCTION

608930_HD7(TSPM).DWG Plotted on 28-Oct-2022 4:20 PM

LAWRENCE
LMRC RAIL TRAIL

STATE	FED. AID PROJ. NO.	SHEET NO.	TOTAL SHEETS
MA	-	44	225
PROJECT FILE NO. 608930			

TRAFFIC SIGN & PAVEMENT MARKING PLANS - 4 OF 7

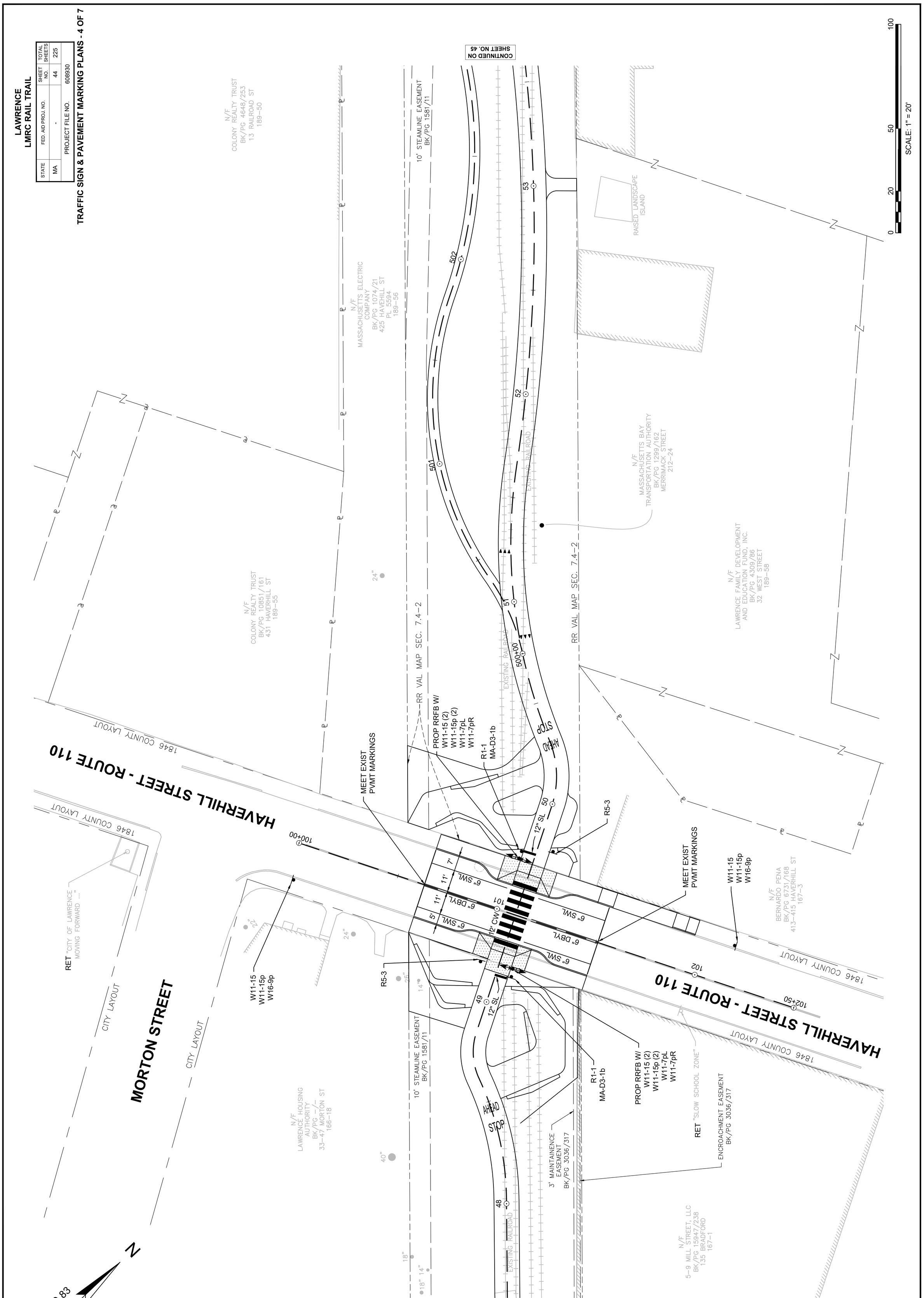

FOR PERMITTING PURPOSES - NOT FOR CONSTRUCTION

Proposal No. 608930-128034

608930_HD7(TSPM).DWG Plotted on 28-Oct-2022 4:20 PM

LAWRENCE
LMRC RAIL TRAIL

STATE	FED. AID PROJ. NO.	SHEET NO.	TOTAL SHEETS
MA	-	45	225
PROJECT FILE NO.	608930		

TRAFFIC SIGN & PAVEMENT MARKING PLANS - 5 OF 7

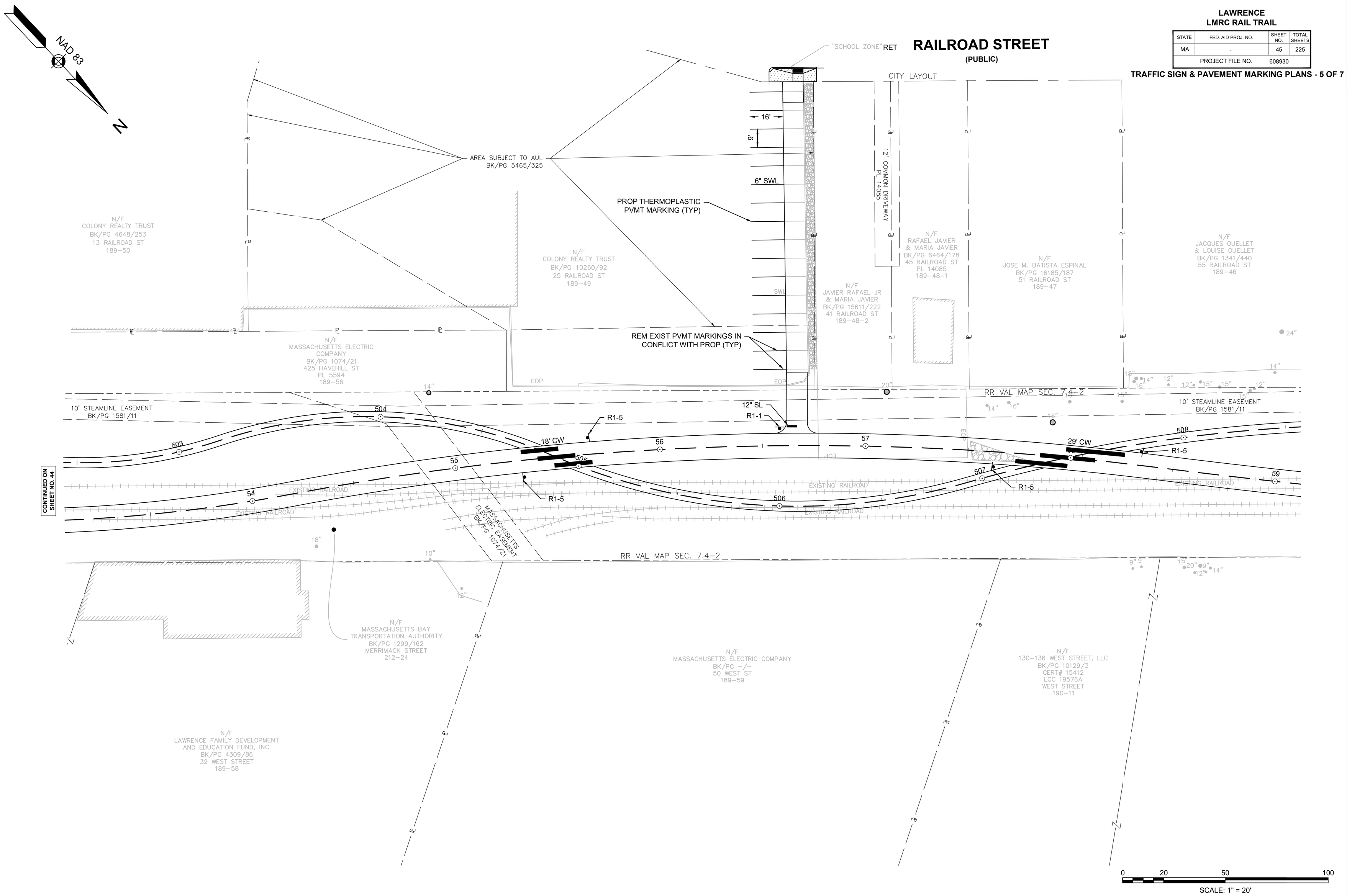

FOR PERMITTING PURPOSES - NOT FOR CONSTRUCTION

608930_HD7(TSPM).DWG Plotted on 28-Oct-2022 4:20 PM

LAWRENCE
LMRC RAIL TRAIL

STATE	FED. AID PROJ. NO.	SHEET NO.	TOTAL SHEETS
MA	-	45	225
PROJECT FILE NO. 608930			

TRAFFIC SIGN & PAVEMENT MARKING PLANS - 6 OF 7

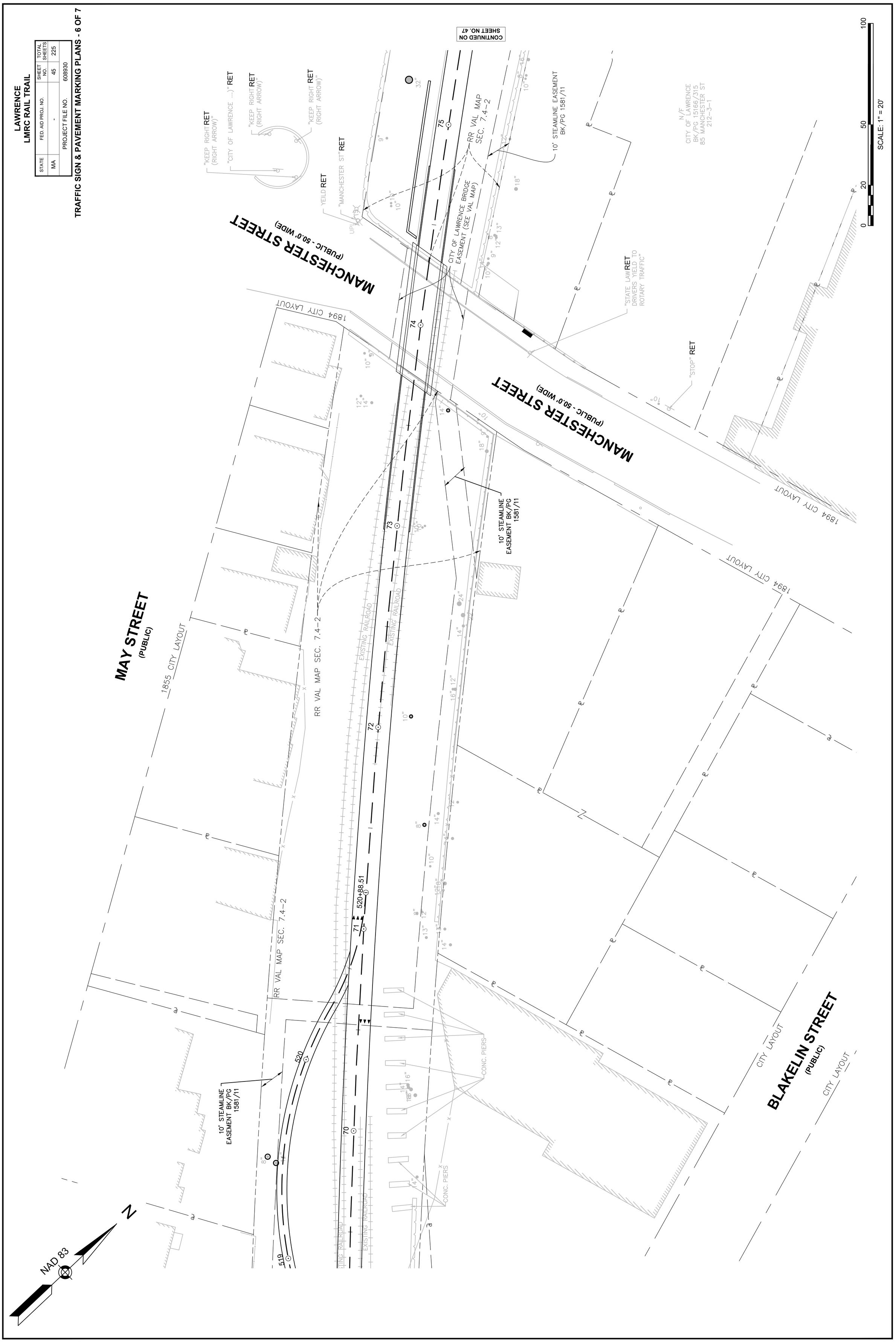

FOR PERMITTING PURPOSES - NOT FOR CONSTRUCTION

LAWRENCE
LMRC RAIL TRAIL

STATE	FED. AID PROJ. NO.	SHEET NO.	TOTAL SHEETS
MA	-	47	225
PROJECT FILE NO.	608930		

TRAFFIC SIGN & PAVEMENT MARKING PLANS - 7 OF 7

608930_HD7(TSPM).DWG Plotted on 28-Oct-2022 4:20 PM

Proposal No. 608930-128034

A00869 - 66

NAD 83

N

BARKER STREET

1867 CITY LAYOUT

1848 CITY LAYOUT

N/F
CITY OF LAWRENCE VETERANS LOT
BK/PG -/-
BARKER ST
212-1

CURRANT HILL ROAD

1848 CITY LAYOUT

1848 CITY LAYOUT

RR VAL MAP SEC. 7.4-2

1848 CITY LAYOUT

RR VAL MAP SEC. 7.4-2

CONTINUED ON SHEET NO. 46

75

76

77

78

79

80

300+00

12" SL

R1-1

AHEAD

STOP

301

302

10' STEAMLINE EASEMENT
BK/PG 1581/11

N/F
CITY OF LAWRENCE
BK/PG -/-
87 MANCHESTER ST
212-3-3

N/F
CITY OF LAWRENCE
BK/PG 15166/315
85 MANCHESTER ST
212-3-1

AREA SUBJECT TO AUL
BK/PG 9906/139

N/F
MASSACHUSETTS BAY
TRANSPORTATION AUTHORITY
BK/PG 1299/162
MERRIMACK STREET
212-2

30' PRIVATE WAY

EOP

N/F
THE CITY OF LAWRENCE
C/O LAWRENCE DPW
BK/PG 11232/152
85A MANCHESTER ST
PL 15922
212-3-2

CONC

R1-1

12" SL

401+60

LIMIT OF WORK
STA 401+60
N3085336.1304
E741907.3135

0 20 50 100

SCALE: 1" = 20'

FOR PERMITTING PURPOSES - NOT FOR CONSTRUCTION

TRAFFIC SIGN SUMMARY

IDENTIFICATION NUMBER	SIZE OF SIGN (in)		LEGEND	TEXT DIMENSIONS (in)			NUMBER OF SIGNS REQUIRED	COLOR			SIZE AND NUMBER OF POSTS REQUIRED	UNIT AREA (SF)	TOTAL AREA (SF)
	WIDTH	HEIGHT		LETTER HEIGHT	VERTICAL SPACING	ARROW RTE. MKR		BACK-GROUND	LEGEND	BORDER			
R1-1	18	18	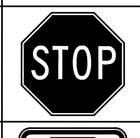	SEE 2009 MANUAL ON UNIFORM TRAFFIC CONTROL DEVICES			8	RED	WHITE	WHITE	8	2.25	18.00
R1-5	36	36					4	WHITE	RED/ BLACK	BLACK	4	9.00	36.00
R3-4	36	36					2	WHITE	RED/ BLACK	BLACK	2	9.00	18.00
R3-8 (14)	30	30					2	WHITE	BLACK	BLACK	2	6.25	12.50
R5-3	24	24					4	WHITE	BLACK	BLACK	2	4.00	16.00
R10-3e	9	15					6	WHITE	BLACK/ ORANGE	BLACK	MOUNT ON TS PED PBN	PAID UNDER ITEM 816.01	
							8	WHITE	BLACK/ ORANGE	BLACK	MOUNT ON TS PED PBN	PAID UNDER ITEM 816.02	
R10-11b	36	36					3	WHITE	BLACK	BLACK	MOUNT ON MAST ARM	9.00	27.00
R10-12	30	36					2	WHITE	BLACK/ GREEN	BLACK	MOUNT ON MAST ARM	7.50	15.00
R10-25	9	12					2	WHITE	BLACK	BLACK	MOUNT ON RRFB	PAID UNDER ITEM 824.221	
							2	WHITE	BLACK	BLACK	MOUNT ON RRFB	PAID UNDER ITEM 824.222	
MA-D3-1a	48	18	SEE RIGHT	8D/5.33D	5 5	N/A	2	GREEN	WHITE	WHITE	MOUNT W/ R1-1	PAID UNDER ITEM 874.	
MA-D3-1b	49	18	SEE RIGHT	8D/5.33D	5 5	N/A	2	GREEN	WHITE	WHITE	MOUNT W/ R1-1	PAID UNDER ITEM 874.	
MA-R10-12a	30	36		MASSDOT STANDARD SIGN			2	WHITE	BLACK/ YELLOW	BLACK	MOUNT ON MAST ARM	7.50	15.00
W4-2L	36	36	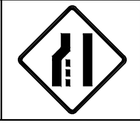	SEE 2009 MANUAL ON UNIFORM TRAFFIC CONTROL DEVICES			1	YELLOW	BLACK	BLACK	1	9.00	9.00

TRAFFIC SIGN SUMMARY

IDENTIFICATION NUMBER	SIZE OF SIGN (in)		LEGEND	TEXT DIMENSIONS (in)			NUMBER OF SIGNS REQUIRED	COLOR			SIZE AND NUMBER OF POSTS REQUIRED	UNIT AREA (SF)	TOTAL AREA (SF)
	WIDTH	HEIGHT		LETTER HEIGHT	VERTICAL SPACING	ARROW RTE. MKR		BACK-GROUND	LEGEND	BORDER			
W11-15	30	30		SEE 2009 MANUAL ON UNIFORM TRAFFIC CONTROL DEVICES			4	YELLOW	BLACK	BLACK	4	6.25	25.00
							4	YELLOW	BLACK	BLACK	MOUNT ON RRFB	PAID UNDER ITEM 824.221	
							4	YELLOW	BLACK	BLACK	MOUNT ON RRFB	PAID UNDER ITEM 824.222	
W11-15p	24	18					4	YELLOW	BLACK	BLACK	MOUNT W/ W11-15	3.00	12.00
							4	YELLOW	BLACK	BLACK	MOUNT ON RRFB	PAID UNDER ITEM 824.221	
							4	YELLOW	BLACK	BLACK	MOUNT ON RRFB	PAID UNDER ITEM 824.222	
W16-7pL	24	12	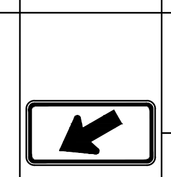				2	YELLOW	BLACK	BLACK	MOUNT ON RRFB	PAID UNDER ITEM 824.221	
							2	YELLOW	BLACK	BLACK	MOUNT ON RRFB	PAID UNDER ITEM 824.222	
W16-7pR	24	12					2	YELLOW	BLACK	BLACK	MOUNT ON RRFB	PAID UNDER ITEM 824.221	
							2	YELLOW	BLACK	BLACK	MOUNT ON RRFB	PAID UNDER ITEM 824.222	
W16-9p	24	12					4	YELLOW	BLACK	BLACK	MOUNT W/ W11-15	2.00	8.00

MA-D3-1a

MA-D3-1b

NOTES:

1. THE MINIMUM MOUNTING HEIGHT OF POST-MOUNTED SIGNS, MEASURED VERTICALLY FROM THE BOTTOM OF THE SIGN TO THE TOP OF CURB OR SIDEWALK, OR THE ELEVATION OF THE NEAR EDGE OF TRAVEL WAY, SHALL BE 7 FEET UNLESS OTHERWISE SPECIFIED.
2. A MINIMUM 3'-0" PATH OF TRAVEL CLEARANCE, EXCLUDING CURB, IS REQUIRED WHEN PLACING SIGNS. SIGS SHALL BE INSTALLED SUCH THAT THE NEAREST EDGE SHALL BE OFFSET A MINIMUM OF 18" FROM THE EDGE OF ROADWAY.

0 20 50 100
SCALE: 1" = 20'

FOR PERMITTING PURPOSES - NOT FOR CONSTRUCTION

608930_HD7(TSPM).DWG Plotted on 28-Oct-2022 4:21 PM

Proposal No. 608930-128034

A00869 - 67

LAWRENCE
LMRC RAIL TRAIL

STATE	FED. AID PROJ. NO.	SHEET NO.	TOTAL SHEETS
MA	-	49	225
PROJECT FILE NO.	608930		

TRAFFIC SIGNAL PLANS - 1 OF 4

608930_HDTA(TRAFFIC SIGNAL PLANS).DWG Plotted on 28-Oct-2022 4:21 PM

Proposal No. 608930-128034

A00869 - 68

N

NAD 83

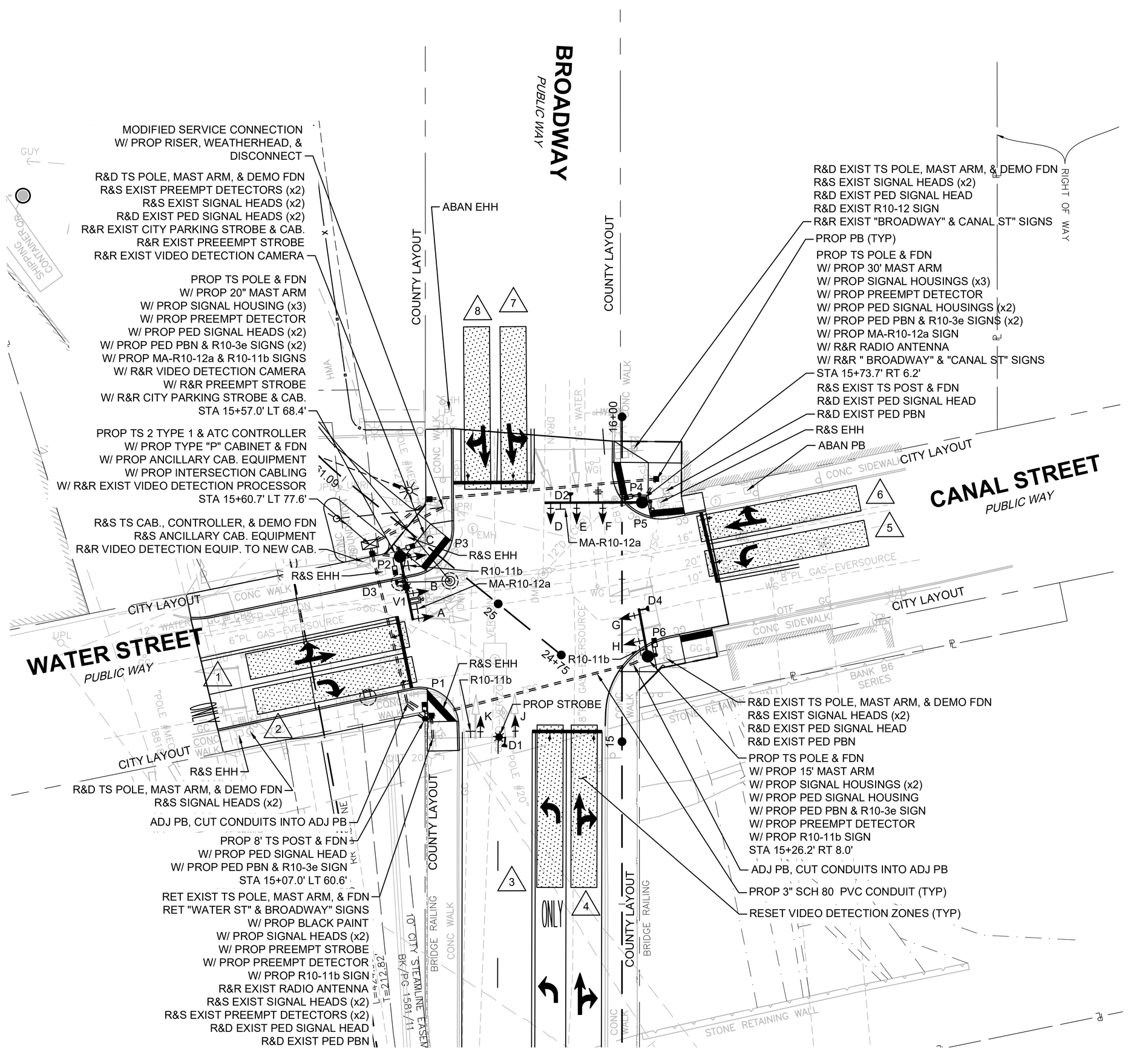

NOTES:

1. PEDESTRIAN PUSH BUTTONS SHALL BE PERPENDICULAR TO THE CROSSWALK PATH OF TRAVEL, WITH THE ARROW PROVIDED ON THE PUSH BUTTON PARALLEL TO THE CROSSWALK PATH OF TRAVEL.
2. WHERE TWO APS PEDESTRIAN PUSH BUTTONS ARE NOT SEPARATED BY MORE THAN 10 FEET, THE AUDIBLE WALK INDICATION SHALL BE A SPEECH WALK MESSAGE.
3. VIDEO DETECTION ZONES SHALL BE ADJUSTED IN THE FIELD BY CONTRACTOR IN PRESENCE OF ENGINEER.
4. CROSSWALKS NOT SHOWN FOR VISUAL CLARITY OF TRAFFIC SIGNAL EQUIPMENT.
5. CONTRACTOR SHALL REMOVE ALL EXISTING AND FUTURE UNUSED TRAFFIC SIGNAL PULL BOXES AND CONDUIT WITHIN AREAS OF NEWLY CONSTRUCTED SIDEWALKS.
6. CONTRACTOR SHALL ABANDON ALL EXISTING CONDUIT UNLESS REMOVAL IS NECESSARY DUE TO OTHER CONSTRUCTION CONFLICTS. ALL EXISTING UNUSED CONDUIT ENDS SHALL BE PLUGGED.
7. CONTRACTOR SHALL MAINTAIN EXISTING TRAFFIC SIGNAL OPERATIONS UNTIL NEW TRAFFIC SIGNAL IS FULLY-OPERATIONAL.
8. MAST ARM POLES AND FOUNDATIONS WILL NEED TO BE INSTALLED WITH LOW-PROFILE EXCAVATION AND/OR INSTALLATION EQUIPMENT DUE TO THE CLOSE PROXIMITY WITH EXISTING OVERHEAD PRIMARY POWER LINES THAT CANNOT BE DE-ENERGIZED.
9. CONTRACTOR SHALL COORDINATE WITH UTILITY COMPANY FOR THE SHIELDING AND INSULATION OF TRAFFIC SIGNAL EQUIPMENT AND OVERHEAD WIRES (AS NECESSARY).

0 20 50 100

SCALE: 1" = 20'

FOR PERMITTING PURPOSES - NOT FOR CONSTRUCTION

LAWRENCE
LMRC RAIL TRAIL

STATE	FED. AID PROJ. NO.	SHEET NO.	TOTAL SHEETS
MA	-	50	225
PROJECT FILE NO.	608930		

TRAFFIC SIGNAL PLANS - 2 OF 4

SEQUENCE AND TIMING CHART FOR FULLY-ACTUATED TRAFFIC SIGNAL CONTROL

BROADWAY AT CANAL STREET AND WATER STREET (LAWRENCE, MASSACHUSETTS)

N

			Ø1			Ø2			Ø3			Ø4			Ø5			Ø6			Ø7			Ø8			Ø9 (PED)		
			OLA			PERM						PERM			NOT USED			FYA			NOT USED			FYA					
APPROACH	DIRECTION	HOUSING	1	2	3	4	5	6	7	8	9	10	11	12	13	14	15	16	17	18	19	20	21	22	23	24	25	26	27
WATER STREET	EB-LT	G	R	R	R	R	R	R	R	R	R	G	Y	R				R	R	R				R	R	R	R	R	R
WATER STREET	EB-R	H	R G	R Y	R	R	R	R	R	R	R	G	Y	R				R	R	R				R	R	R	R	R	R
CANAL STREET	WB-L	A	R	R	R	R	R	R	G	Y	R	R	R	R				R	R	R				FY	Y	R	R	R	R
CANAL STREET	WB-TR	B,C	R	R	R	R	R	R	R	R	R	R	R	R				R	R	R				G	Y	R	R	R	R
BROADWAY	NB-L	D	G	Y	R	R	R	R	R	R	R	R	R	R				FY	Y	R				R	R	R	R	R	R
BROADWAY	NB-TR	E,F	R	R	R	R	R	R	R	R	R	R	R	R				G	Y	R				R	R	R	R	R	R
BROADWAY	SB-LT	J,K	R	R	R	G	Y	R	R	R	R	R	R	R				R	R	R				R	R	R	G	Y	R
PEDESTRIAN	ALL	P1-P8	DW	DW	DW	DW	DW	DW	DW	DW	DW	DW	DW	DW				DW	DW	DW				DW	DW	DW	W	FDW	DW
MINIMUM INTERVAL			6			10			6			6						10						6					
VEHICLE EXTENSION			2			3			2			2						3						2					
MAXIMUM 1			15			35			10			20						50						35					
MAXIMUM 2			25			40			10			35						65						50					
YELLOW CLEARANCE				3.5			4.0			3.5			3.5						4.0						3.5				
RED CLEARANCE					0.0			1.0			0.0			2.5						1.0						2.5				
WALK																											7.0		
PEDESTRIAN CLEARANCE																												13.0	4.0
RECALL			OFF			MIN			OFF			OFF						MIN						OFF			OFF		
DETECTOR			NON-LOCK			NON-LOCK			NON-LOCK			NON-LOCK						NON-LOCK						NON-LOCK			LOCK		

EMERGENCY ONLY

PRE-EMPTION PHASING AND PRIORITY

	PREEMPT ØA - D1			PREEMPT ØB - D2			PREEMPT ØC - D3			PREEMPT ØD - D4		
FLASHING OPERATION	28	29	30	31	32	33	34	35	36	37	38	39
FR	R	R	R	R	R	R	G	Y	R	R	R	R
FR	R	R	R	R	R	R	G Y		R	R	R	R
FR	R	R	R	R	R	R	G	Y	R	R	R	R
FR	R	R	R	R	R	R	R	R	R	G	Y	R
FR	G	Y	R	R	R	R	R	R	R	R	R	R
FY	G	Y	R	R	R	R	R	R	R	R	R	R
FY	R	R	R	G	Y	R	R	R	R	R	R	R
OUT	DW	DW	DW	DW	DW	DW	DW	DW	DW	DW	DW	DW
	*			*			*			*		
		4.0			4.0			3.5			3.5	
			1.0			1.0			2.5			2.5
	Ø1 & Ø6			Ø2			Ø4			Ø3 & Ø8		
	NEXT Ø2&Ø6			NEXT Ø2&Ø6			NEXT Ø2&Ø6			NEXT Ø2&Ø6		

SEQUENCE & TIMING NOTES:
1. AUTOMATIC FLASHING OPERATION PER M.U.T.C.D. SECTION 4D.12.
2. PEDESTRIAN PHASE UPON PUSH BUTTON ACTIVATION ONLY.
3. PERM = PERMITTED LEFT-TURN | FYA = FLASHING YELLOW ARROW
4. OL = OVERLAP
5. MAXIMUM 1 - FREE OPERATION
   MAXIMUM 2 - M-F (3:00 PM - 7:00 PM)
6. IF THE ASSIGNED RIGHT OF WAY FOR ANY TRAFFIC MOVEMENT IS TO REMAIN IN EFFECT DURING THE NEXT CALLED PHASE, THE SIGNAL INDICATIONS FOR THAT TRAFFIC MOVEMENT WILL NOT CHANGE DURING THE CLEARANCE INTERVAL.
7. THE RIGHT OF WAY MAY BE ASSIGNED TO ANY PHASE OR ANY COMBINATION OF NON-CONFLICTING PHASES.
8. IF CALLS EXIST ON ALL PHASES, THE ASSIGNMENT OF RIGHT OF WAY SHALL BE IN ACCORDANCE WITH THE PREFERENTIAL PHASE SEQUENCE.
9. IF THE ASSIGNED RIGHT-OF-WAY FOR ANY TRAFFIC MOVEMENT IS TO CHANGE DURING THE NEXT CALLED PHASE, THE SIGNAL INDICATION FOR THAT MOVEMENT WILL DISPLAY THE APPROPRIATE CLEARANCE INTERVALS.
10. IF Ø8 IS CALLED IMMEDIATELY FOLLOWING Ø3, THE SEQUENCE FOR SIGNAL HOUSING "A" SHALL BE SOLID GREEN ARROW, SOLID YELLOW ARROW, FLASHING YELLOW ARROW, SOLID YELLOW ARROW, AND SOLID RED ARROW.
11. IF Ø6 IS CALLED IMMEDIATELY FOLLOWING Ø1, THE SEQUENCE FOR SIGNAL HOUSING "D" SHALL BE SOLID GREEN ARROW, SOLID YELLOW ARROW, FLASHING YELLOW ARROW, SOLID YELLOW ARROW, AND SOLID RED ARROW.

EMERGENCY VEHICLE PRE-EMPTION NOTES:
1. EMERGENCY VEHICLE PRE-EMPTION SIGNALS SHALL BE OPTICALLY TRANSMITTED BY OPTICAL EMITTERS MOUNTED IN EMERGENCY VEHICLES AND RECEIVED BY OPTICAL DETECTORS LOCATED AT EACH INTERSECTION.
2. EMERGENCY VEHICLE PRE-EMPTION SIGNALS SHALL BE SERVICED ON A FIRST DETECTED FIRST SERVED BASIS.
3. EMERGENCY PRE-EMPTION SHALL OVERRIDE COORDINATION.
4. IN RESPONSE TO A PRE-EMPTION SIGNAL RECEIVED AT AN INTERSECTION BY OPTICAL DETECTOR D1 (OR D2, D3, D4) THE CONTROLLER SHALL HOLD OR ADVANCE TO AND HOLD IN EMERGENCY VEHICLE PRE-EMPTION PHASE ØA (OR ØB, ØC, ØD) GREEN FOR A MINIMUM OF TEN (10) SECONDS OR A MAXIMUM OF SIXTY (60) SECONDS OR UNTIL PRE-EMPTION SIGNAL CEASES. THE CONTROLLER SHALL THEN TIME PRE-EMPTION PHASE CLEARANCE (AS NOTED IN CHART) AND SERVICE SUBSEQUENT EMERGENCY VEHICLE PRE-EMPTION PHASES AS NECESSARY.
5. NORMAL CLEARANCE SHALL BE PROVIDED ON PHASES THAT ARE TO BE TERMINATED BY PRE-EMPTION DEMAND.
6. CONFIRMATION STROBES (WHITE) SHALL BE ILLUMINATED WHENEVER ANY EMERGENCY VEHICLE PRE-EMPTION GREEN IS ON.

CONSTRUCTION NOTES:
1. THE CONTRACTOR SHALL MAINTAIN EXISTING TRAFFIC SIGNAL OPERATIONS THROUGHOUT CONSTRUCTION UNTIL THE NEW TRAFFIC SIGNAL EQUIPMENT IS FULLY-OPERATIONAL.
2. THE CONSTRUCTION SHALL CONFORM WITH MASSACHUSETTS DEPARTMENT OF TRANSPORTATION, HIGHWAY DIVISION SPECIFICATIONS UNLESS OTHERWISE NOTED.
3. PEDESTRIAN PUSH BUTTONS SHALL BE PERPENDICULAR TO THE CROSSWALK PATH OF TRAVEL, WITH THE ARROW PROVIDED ON THE PUSH BUTTON PARALLEL TO THE CROSSWALK PATH OF TRAVEL.
4. PULL BOXES SHALL NOT BE LOCATED WITHIN THE ACCESSIBLE RAMPS UNLESS OTHERWISE INDICATED.
5. EXISTING CONDUIT LAYOUT IS APPROXIMATE AND SHALL BE CONFIRMED BY THE CONTRACTOR.
6. ALL PROPOSED CONCRETE PULL BOX FOUNDATIONS SHALL BE CONSTRUCTED IN ACCORDANCE WITH MASSACHUSETTS DEPARTMENT OF TRANSPORTATION SIGNAL & LIGHTING STANDARDS.

BROADWAY @ CANAL STREET / WATER STREET
LIST OF MAJOR ITEMS REQUIRED

ITEM #	QUANTITY	DESCRIPTION
804.3	± 270 FT	3" SCH. 80 PVC CONDUIT
811.31	4	PULL BOX 12 X12 INCHES - SD2.031
811.35	2	PULL BOX ADJUSTED
811.39	5	ELECTRIC HANDHOLE REMOVED AND STACKED
816.01	1	NEMA TS 2 TYPE 1 & ATC CONTROLLER IN A TYPE P BASE MOUNTED CAB, ANCILLARY CAB EQUIPMENT, W/ FDN (PAINTED BLACK)
	1	MODIFIED SERVICE CONNECTION W/ RISER, WEATHERHEAD, & DISCONNECT
	1	TS POLE W/ 15' MAST ARM, STEEL MONOLEVER, W/ FDN (PAINTED BLACK)
	1	TS POLE W/ 20' MAST ARM, STEEL MONOLEVER, W/ FDN (PAINTED BLACK)
	1	TS POLE W/ 30' MAST ARM, STEEL MONOLEVER, W/ FDN (PAINTED BLACK)
	1	8' TS POST, BASE, & FDN (PAINTED BLACK)
	7	SIGNAL HEAD, 3-SECTION, 12" L.E.D. MODULES, 5" RETROREFLECTIVE BACKPLATES, & TUNNEL VISORS (PAINTED BLACK)
	2	SIGNAL HEAD, 4-SECTION, 12" L.E.D. MODULES, 5" RETROREFLECTIVE BACKPLATES, & TUNNEL VISORS (PAINTED BLACK)
	1	SIGNAL HEAD, 5-SECTION, 12" L.E.D. MODULES, 5" RETROREFLECTIVE BACKPLATES, & TUNNEL VISORS (PAINTED BLACK)
	6	PEDESTRIAN SIGNAL HEAD, 16" L.E.D. MODULE, COUNTDOWN INDICATOR (PAINTED BLACK)
	6	PEDESTRIAN PUSH BUTTON (VIBRATORY) W/ AUDIBLE WARNING DEVICES (APS) & R10-3e SIGN SADDLE (PAINTED BLACK)
	3	EMERGENCY PREEMPT 2-CH PHASE SELECTORS (2 + 1 SPARE)
	1	EMERGENCY PREEMPT CONFIRMATION STROBE
	4	EMERGENCY PREEMPT DETECTORS
	1	CONTROLLER PROGRAMMING & FINE TUNING
	1	INTERSECTION RECABLING
	1	R&R EXIST PREEMPT STROBE
	1	R&R EXIST VIDEO DETECTION CAMERA
	1	R&R EXIST VIDEO DETECTION PROCESSOR TO NEW CAB.
	1	R&R EXIST EXIST RADIO ANTENNA
	1	R&R EXIST CITY PARKING STROBE & CAB.
	4	R&R TS MOUNTED STREET SIGNS
816.80	4	R&D EXIST TS POLE, MAST ARM, & DEMO FDN
	10	R&S EXIST SIGNAL HEADS
	1	R&S EXIST TS CABINET & CONTROLLER W/ ANCILLARY CAB. EQUIPMENT
	6	R&D EXIST PEDESTRIAN SIGNAL HEAD
	3	R&D EXIST PEDESTRIAN PUSH BUTTON
	1	R&D EXIST TS POST & FDN
	4	R&S EXIST PREEMPT DETECTORS
	1	R&D EXIST R10-12
832.	42 SF	SIGNS (R10-11b, MA-R10-12a) AS NOTED ON TS EQUIPMENT

PLUS NECESSARY CONDUIT, CABLE, LABOR, MISCELLANEOUS MATERIAL AND EQUIPMENT TO COMPLETE THE INSTALLATION AND PROVIDE AN OPERATING TRAFFIC CONTROL SIGNAL.

VIDEO DETECTOR DATA

AMPLIFIER NO.	DETECTOR NO.	NO.-SECTION SIZE	PHASE CALLED	PHASE EXT.	DELAY/ EXT.	OPERATIONS
V1	1	±8'x50'	Ø4	Ø4	0	PRESENCE
V1	2	±8'x50'	Ø4	Ø4	0	PRESENCE
V1	3	±8'x50'	Ø1	Ø1 / Ø6	0	PRESENCE
V1	4	±8'x50'	Ø6	Ø6	0	PRESENCE
V1	5	±8'x50'	Ø3	Ø3 / Ø8	0	PRESENCE
V1	6	±8'x50'	Ø8	Ø8	0	PRESENCE
V1	7	±8'x50'	Ø2	Ø2	0	PRESENCE
V1	8	±8'x50'	Ø2	Ø2	0	PRESENCE

VIDEO DETECTOR NOTES:
1. DELAY AND EXTENSION TIMINGS SHALL BE PROGRAMMED IN THE CONTROLLER ONLY.

SIGNAL HOUSING DATA

A,D	B,C,E,F,G,J,K	H	P1-P8
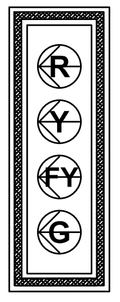	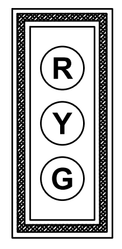	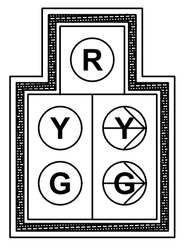	
ALL W/ 12" LED MODULES, 5" BACKPLATES, 3" RETRO-REFLECTIVE STRIP, & TUNNEL VISORS			ALL 16" LED W/ COUNTDOWN INDICATION & VISORS

PREFERENTIAL PHASE SEQUENCE

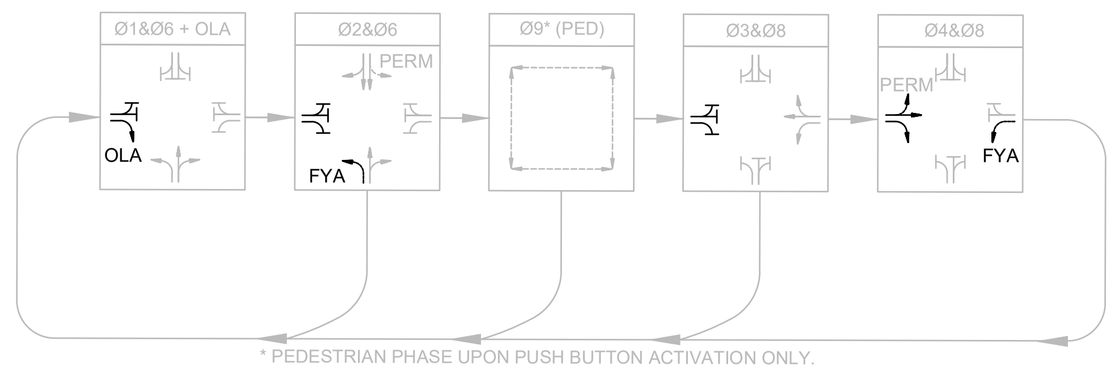

* PEDESTRIAN PHASE UPON PUSH BUTTON ACTIVATION ONLY.

608930_HD7A(TRAFFIC SIGNAL PLANS).DWG Plotted on 28-Oct-2022 4:22 PM
Proposal No. 608930-128034
A00869 - 69
FOR PERMITTING PURPOSES - NOT FOR CONSTRUCTION

LAWRENCE
LMRC RAIL TRAIL

STATE	FED. AID PROJ. NO.	SHEET NO.	TOTAL SHEETS
MA	-	51	225
PROJECT FILE NO.	608930		

TRAFFIC SIGNAL PLANS - 3 OF 4

608930_HD7A(TRAFFIC SIGNAL PLANS).DWG Plotted on 28-Oct-2022 4:22 PM

Proposal No. 608930-128034

A00869 - 70

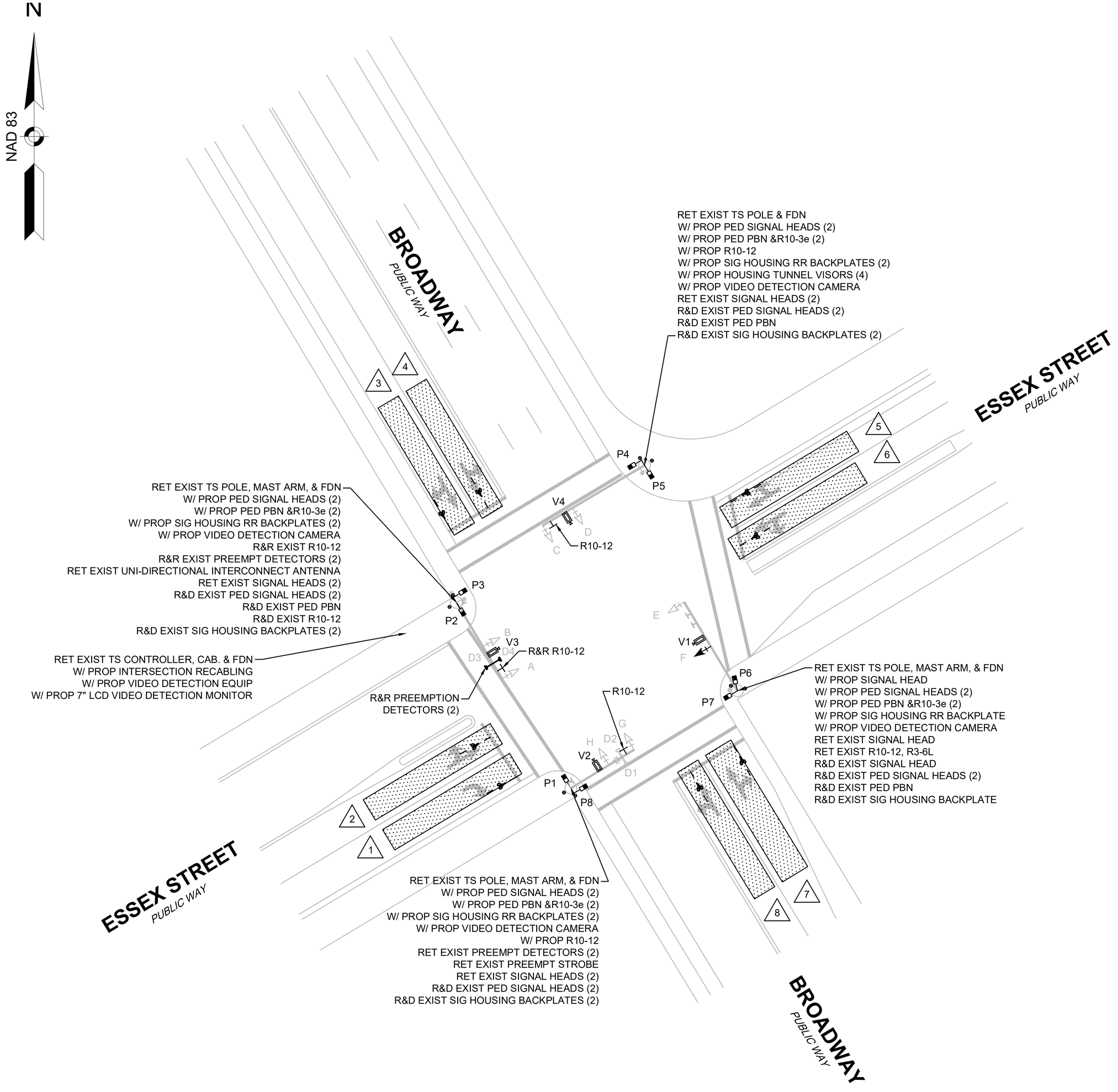

NOTES:

1. RETAIN ALL TRAFFIC SIGNAL EQUIPMENT OR INFRASTRUCTURE UNLESS OTHERWISE NOTED.
2. PEDESTRIAN PUSH BUTTONS SHALL BE PERPENDICULAR TO THE CROSSWALK PATH OF TRAVEL, WITH THE ARROW PROVIDED ON THE PUSH BUTTON PARALLEL TO THE CROSSWALK PATH OF TRAVEL.
3. WHERE TWO APS PEDESTRIAN PUSH BUTTONS ARE NOT SEPARATED BY MORE THAN 10 FEET, THE AUDIBLE WALK INDICATION SHALL BE A SPEECH WALK MESSAGE.
4. CONTRACTOR SHALL R&R ALL SIGNAL HOUSING, WHERE APPLICABLE, TO BE CENTERED ON LANE.
5. VIDEO DETECTION ZONES SHALL BE ADJUSTED IN THE FIELD BY CONTRACTOR IN PRESENCE OF AN ENGINEER.
6. EXISTING RADIO ANTENNA SHALL BE MAINTAINED.
7. ALL EXISTING LOOP DETECTIONS SHALL BE ABANDONED, LEAD-IN CABLES SHALL BE REMOVED BY THE CONTRACTOR.

FOR PERMITTING PURPOSES - NOT FOR CONSTRUCTION

LAWRENCE
LMRC RAIL TRAIL

STATE	FED. AID PROJ. NO.	SHEET NO.	TOTAL SHEETS
MA	-	52	225
PROJECT FILE NO.	608930		

TRAFFIC SIGNAL PLANS - 4 OF 4

SEQUENCE AND TIMING CHART FOR FULLY-ACTUATED TRAFFIC SIGNAL CONTROL

BROADWAY AT AND ESSEX STREET (LAWRENCE, MASSACHUSETTS)

N

			Ø1			Ø2			Ø3			Ø4			Ø5			Ø6			Ø7			Ø8			Ø9 (PED)		
			OLA			PERM			NOT USED			PERM			NOT USED			PERM			NOT USED			PERM					
APPROACH	DIRECTION	HOUSING	1	2	3	4	5	6	7	8	9	10	11	12	13	14	15	16	17	18	19	20	21	22	23	24	25	26	27
ESSEX STREET	EB-LT	E	R	R	R	R	R	R				G	Y	R				R	R	R				R	R	R	R	R	R
ESSEX STREET	EB-R	F	R G	R Y	R	R	R	R				G	Y	R				R	R	R				R	R	R	R	R	R
ESSEX STREET	WB	A,B	R	R	R	R	R	R				R	R	R				R	R	R				G	Y	R	R	R	R
BROADWAY	NB-L	C	←G–	←Y–	R	R	R	R				R	R	R				G	Y	R				R	R	R	R	R	R
BROADWAY	NB-TR	D	R	R	R	R	R	R				R	R	R				G	Y	R				R	R	R	R	R	R
BROADWAY	SB	G,H	R	R	R	G	Y	R				R	R	R				R	R	R				R	R	R	G	Y	R
PEDESTRIAN	ALL	P1-P8	DW	DW	DW	DW	DW	DW				DW	DW	DW				DW	DW	DW				DW	DW	DW	W	FDW	DW
MINIMUM INTERVAL			6									6						6						10					
VEHICLE EXTENSION			2			2						2						2						2					
MAXIMUM 1			10			20						30						30						30					
MAXIMUM 2			10			30						45						40						45					
YELLOW CLEARANCE				3.5			4.0						3.5						4.0						3.5				
RED CLEARANCE					1.5			1.0						1.5						1.0						1.5				
WALK																											7.0		
PEDESTRIAN CLEARANCE																												14.0	4.0
RECALL			OFF			MIN						OFF						MIN						OFF			OFF		
DETECTOR			NON-LOCK			NON-LOCK						NON-LOCK						NON-LOCK						NON-LOCK			LOCK		
EMERGENCY ONLY																													

PRE-EMPTION PHASING AND PRIORITY

	PREEMPT ØA - D1			PREEMPT ØB - D2			PREEMPT ØC - D3			PREEMPT ØD - D4		
FLASHING OPERATION	28	29	30	31	32	33	34	35	36	37	38	39
FR	R	R	R	R	R	R	G	Y	R	R	R	R
FR	R	R	R	R	R	R	G G	Y Y	R	R	R	R
FR	R	R	R	R	R	R	R	R	R	G	Y	R
FY	←G G	←Y Y	R	R	R	R	R	R	R	R	R	R
FY	G	Y	R	R	R	R	R	R	R	R	R	R
FY	R	R	R	G	Y	R	R	R	R	R	R	R
OUT	DW	DW	DW	DW	DW	DW	DW	DW	DW	DW	DW	DW
EMERGENCY ONLY	*			*			*			*		
		4.0			4.0			3.5			3.5	
			1.5			1.0			1.5			1.5
	Ø1&Ø6			Ø2			Ø4			Ø8		
	NEXT Ø2&Ø6			NEXT Ø2&Ø6			NEXT Ø2&Ø6			NEXT Ø2&Ø6		

SEQUENCE & TIMING NOTES:
1. AUTOMATIC FLASHING OPERATION PER M.U.T.C.D. SECTION 4D.12.
2. PEDESTRIAN PHASE UPON PUSH BUTTON ACTIVATION ONLY.
3. PERM = PERMITTED LEFT-TURN
4. OL = OVERLAP
5. MAXIMUM 1 = FREE OPERATION
   MAXIMUM 2 = M-F (3:00 PM - 7:00 PM)
6. IF THE ASSIGNED RIGHT OF WAY FOR ANY TRAFFIC MOVEMENT IS TO REMAIN IN EFFECT DURING THE NEXT CALLED PHASE, THE SIGNAL INDICATIONS FOR THAT TRAFFIC MOVEMENT WILL NOT CHANGE DURING THE CLEARANCE INTERVAL.
7. THE RIGHT OF WAY MAY BE ASSIGNED TO ANY PHASE OR ANY COMBINATION OF NON-CONFLICTING PHASES.
8. IF CALLS EXIST ON ALL PHASES, THE ASSIGNMENT OF RIGHT OF WAY SHALL BE IN ACCORDANCE WITH THE PREFERENTIAL PHASE SEQUENCE.
9. IF THE ASSIGNED RIGHT-OF-WAY FOR ANY TRAFFIC MOVEMENT IS TO CHANGE DURING THE NEXT CALLED PHASE, THE SIGNAL INDICATION FOR THAT MOVEMENT WILL DISPLAY THE APPROPRIATE CLEARANCE INTERVALS.

BROADWAY @ ESSEX STREET
LIST OF MAJOR ITEMS REQUIRED

ITEM #	QUANTITY	DESCRIPTION
816.02	1	SIGNAL HEAD (POLYCARBONATE), 5-SECTION, 12" L.E.D. MODULES, 5" RETROREFLECTIVE BACKPLATE, & TUNNEL VISORS
	8	PEDESTRIAN SIGNAL HEAD, 16" L.E.D. MODULE, COUNTDOWN INDICATOR
	8	PEDESTRIAN PUSH BUTTON (VIBRATORY) W/ AUDIBLE WARNING DEVICES (APS) & R10-3e SIGN SADDLE
	1	VIDEO DETECTION CHASSIS
	1	7" LCD VIDEO DETECTION MONITOR
	2	VIDEO DETECTION PROCESSORS [OR 1 IF SPVD SYSTEM]
	4	VIDEO DETECTION CAMERAS [OR SPVD SYSTEM CAMERA]
	6	3-SECTION - 12" MODULE BACKPLATES W/ 3" RETROREFLECTIVE STRIP
	1	4-SECTION - 12" MODULE BACKPLATES W/ 3" RETROREFLECTIVE STRIP
	4	12" MODULE TUNNEL VISORS
	1	R&R EXIST R10-12
	2	R&R EXIST EMERGENCY PREEMPT DETECTORS AND DETECTOR CABLING
816.80	8	R&D EXIST PEDESTRIAN SIGNAL HEAD
	3	R&D EXIST PEDESTRIAN PUSH BUTTON
	7	R&D EXIST HOUSING BACKPLATES
	1	R&D EXIST R10-12
832.	15 SF	SIGNS (R10-12) AS NOTED ON TS EQUIPMENT

PLUS NECESSARY CONDUIT, CABLE, LABOR, MISCELLANEOUS MATERIAL AND EQUIPMENT TO COMPLETE THE INSTALLATION AND PROVIDE AN OPERATING TRAFFIC CONTROL SIGNAL.

CONSTRUCTION NOTES:
1. THE CONTRACTOR SHALL MAINTAIN EXISTING TRAFFIC SIGNAL OPERATIONS THROUGHOUT CONSTRUCTION UNTIL THE NEW TRAFFIC SIGNAL EQUIPMENT IS FULLY-OPERATIONAL.
2. THE CONSTRUCTION SHALL CONFORM WITH MASSACHUSETTS DEPARTMENT OF TRANSPORTATION, HIGHWAY DIVISION SPECIFICATIONS UNLESS OTHERWISE NOTED.
3. PEDESTRIAN PUSH BUTTONS SHALL BE PERPENDICULAR TO THE CROSSWALK PATH OF TRAVEL, WITH THE ARROW PROVIDED ON THE PUSH BUTTON PARALLEL TO THE CROSSWALK PATH OF TRAVEL.
4. EXISTING CONDUIT LAYOUT IS APPROXIMATE AND SHALL BE CONFIRMED BY THE CONTRACTOR.

VIDEO DETECTION DATA

CAMERA #	DETECTOR #	SIZE	Ø CALLED	Ø EXTEND	DELAY/EXT	OPERATION
V1	1	±8'x50'	Ø4	Ø4	0 SEC	PRESENCE
V1	2	±8'x50'	Ø4	Ø4	0 SEC	PRESENCE
V2	3	±8'x50'	Ø2	Ø2	0 SEC	PRESENCE
V2	4	±8'x50'	Ø2	Ø2	0 SEC	PRESENCE
V3	5	±8'x50'	Ø8	Ø8	0 SEC	PRESENCE
V3	6	±8'x50'	Ø8	Ø8	0 SEC	PRESENCE
V4	7	±8'x50'	Ø6	Ø6	0 SEC	PRESENCE
V4	8	±8'x50'	Ø1	Ø1&Ø6	0 SEC	PRESENCE

VIDEO DETECTOR NOTES:
1. DELAY AND EXTENSION TIMINGS SHALL BE PROGRAMMED IN THE CONTROLLER ONLY.

EMERGENCY VEHICLE PRE-EMPTION NOTES:
1. EMERGENCY VEHICLE PRE-EMPTION SIGNALS SHALL BE OPTICALLY TRANSMITTED BY OPTICAL EMITTERS MOUNTED IN EMERGENCY VEHICLES AND RECEIVED BY OPTICAL DETECTORS LOCATED AT EACH INTERSECTION.
2. EMERGENCY VEHICLE PRE-EMPTION SIGNALS SHALL BE SERVICED ON A FIRST DETECTED FIRST SERVED BASIS.
3. EMERGENCY PRE-EMPTION SHALL OVERRIDE COORDINATION.
4. IN RESPONSE TO A PRE-EMPTION SIGNAL RECEIVED AT AN INTERSECTION BY OPTICAL DETECTOR D1 (OR D2, D3, D4) THE CONTROLLER SHALL HOLD OR ADVANCE TO AND HOLD IN EMERGENCY VEHICLE PRE-EMPTION PHASE ØA (OR ØB, ØC, ØD) GREEN FOR A MINIMUM OF TEN (10) SECONDS OR A MAXIMUM OF SIXTY (60) SECONDS OR UNTIL PRE-EMPTION SIGNAL CEASES. THE CONTROLLER SHALL THEN TIME PRE-EMPTION PHASE CLEARANCE (AS NOTED IN CHART) AND SERVICE SUBSEQUENT EMERGENCY VEHICLE PRE-EMPTION PHASES AS NECESSARY.
5. NORMAL CLEARANCE SHALL BE PROVIDED ON PHASES THAT ARE TO BE TERMINATED BY PRE-EMPTION DEMAND.
6. CONFIRMATION STROBES (WHITE) SHALL BE ILLUMINATED WHENEVER ANY EMERGENCY VEHICLE PRE-EMPTION GREEN IS ON.

SIGNAL HOUSING DATA

A,B,D,E,G,H	C	F	P1-P8
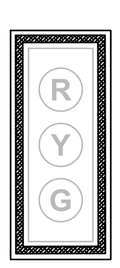	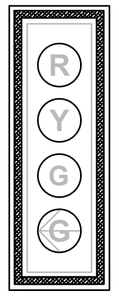	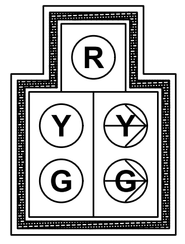	
5" BACKPLATES FOR 12" MODULES, W/ 2" RETRO-REFLECTIVE STRIP, & TUNNEL VISORS ON "C"		POLYCARBONATE W/ 12" LED MODULES, 5" BACKPLATES, 3" RETROREFLECTIVE STRIP, & TUNNEL VISORS	ALL 16" LED W/ COUNTDOWN INDICATION & VISORS

PREFERENTIAL PHASE SEQUENCE

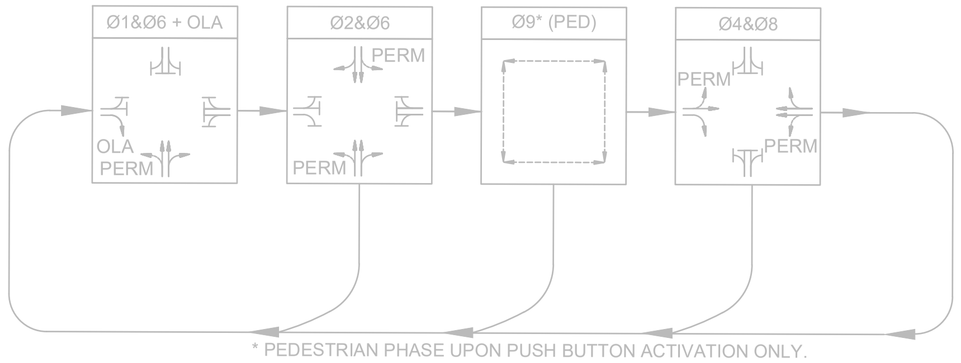

* PEDESTRIAN PHASE UPON PUSH BUTTON ACTIVATION ONLY.

608930_HD7A(TRAFFIC SIGNAL PLANS).DWG Plotted on 28-Oct-2022 4:23 PM

Proposal No. 608930-128034

A00869 - 71

FOR PERMITTING PURPOSES - NOT FOR CONSTRUCTION

NOTES:

1. ALL TEMPORARY TRAFFIC CONTROL WORK SHALL CONFORM TO THE LATEST EDITION OF THE "MANUAL ON UNIFORM TRAFFIC CONTROL DEVICES" (MUTCD) AND ALL REVISIONS, UNLESS SUPERCEDED BY THESE PLANS.
2. ALL SIGN LEGENDS, BORDERS, AND MOUNTING SHALL BE IN ACCORDANCE WITH THE MUTCD.
3. TEMPORARY CONSTRUCTION SIGNING AND ALL OTHER TRAFFIC CONTROL DEVICES SHALL BE IN PLACE PRIOR TO THE START OF ANY WORK.
4. TEMPORARY CONSTRUCTION SIGNING, BARRICADES, AND ALL OTHER NECESSARY WORK ZONE TRAFFIC CONTROL DEVICES SHALL BE REMOVED FROM THE HIGHWAY OR COVERED WHEN THEY ARE NOT REQUIRED FOR CONTROL OF TRAFFIC.
5. SIGNS AND SIGN SUPPORTS LOCATED ON OR NEAR THE TRAVELED WAY, CHANNELIZING DEVICES, BARRIERS, AND CRASH ATTENUATORS MUST PASS THE CRITERIA SET FORTH IN THE "MANUAL FOR ASSESSING SAFETY HARDWARE" (MASH).
6. CONTRACTORS SHALL NOTIFY EACH ABUTTER AT LEAST 24 HOURS IN ADVANCE OF THE START OF ANY WORK THAT WILL REQUIRE THE TEMPORARY CLOSURE OF ACCESS, SUCH AS CONDUIT INSTALLATION, EXISTING PAVEMENT EXCAVATION, TEMPORARY DRIVEWAY PAVEMENT PLACEMENT, AND SIMILAR OPERATIONS.
7. THE FIRST TEN PLASTIC DRUMS OF A TAPER SHALL BE MOUNTED WITH SEQUENTIAL FLASHING LIGHTS.
8. THE ADVISORY SPEED LIMIT, IF REQUIRED, SHALL BE DETERMINED BY THE ENGINEER.
9. DISTANCES ARE A GUIDE AND MAY BE ADJUSTED IN THE FIELD BY THE ENGINEER.
10. MAXIMUM SPACING OF TRAFFIC DEVICES IN A TAPER (DRUMS OR CONES) IS EQUAL IN FEET TO THE SPEED LIMIT IN MPH.
11. MINIMUM LANE WIDTH IS TO BE 11 FEET UNLESS OTHERWISE SHOWN. MINIMUM LANE WIDTH TO BE MEASURED FROM THE EDGE OF DRUMS OR MEDIAN BARRIER.
12. ALL SIGNS SHALL BE MOUNTED ON THEIR OWN STANDARD SIGN SUPPORTS.
13. TWO DIRECTIONS OF TRAVEL SHALL BE MAINTAINED ON ALL ROADS WITHIN THE PROJECT LIMITS BEFORE 9:00 AM & AFTER 3:00 PM
14. THE CONTRACTOR SHALL TEMPORARILY REMOVE TELEPHONE MANHOLE CASTINGS AND RISERS, PLACE GRAVEL SUB-BASE MATERIAL AND PLACE STEEL PLATES OVER THE MANHOLE STRUCTURES PRIOR TO OPENING THE ROADWAY TO TRAFFIC IN THE VICINITY OF THE EXISTING TELEPHONE MANHOLES AND CONDUIT.

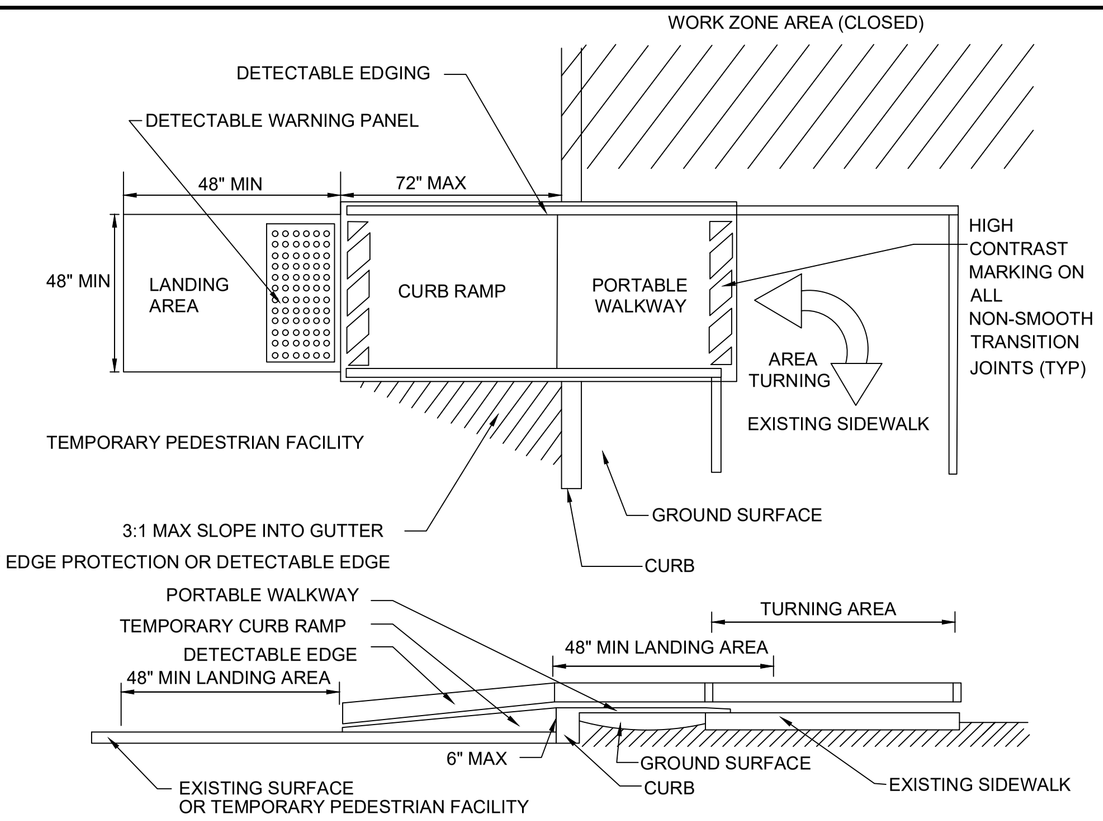

LAWRENCE
LMRC RAIL TRAIL

STATE	FED. AID PROJ. NO.	SHEET NO.	TOTAL SHEETS
MA	-	53	225
PROJECT FILE NO.	608930		

TEMPORARY TRAFFIC CONTROL PLANS - 1 OF 4

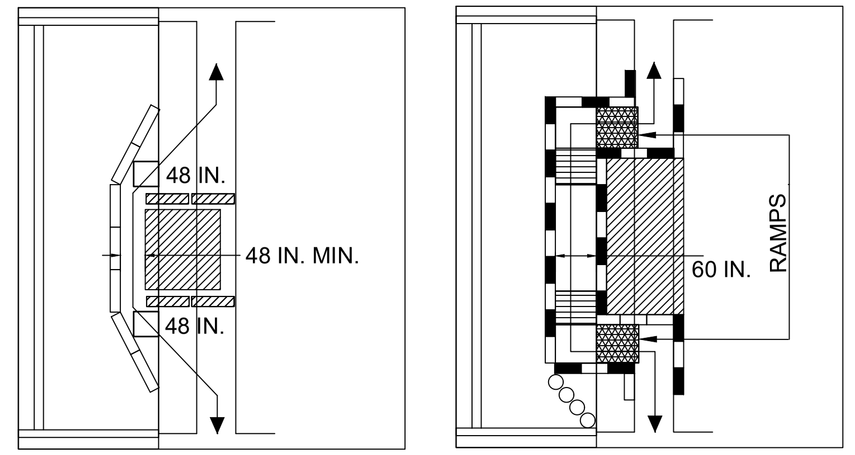

- REFLECTORIZED PLASTIC DRUM OR 36" CONE
- P/F POLICE/FLAGGER DETAIL
- TYPE III BARRICADE
- CHANGEABLE MESSAGE SIGN
- ARROW BOARD
- WORK ZONE
- DIRECTION OF TRAFFIC
- IMPACT ATTENUATOR
- MEDIAN BARRIER
- MEDIAN BARRIER WITH WARNING LIGHTS
- WORK VEHICLE
- TRUCK MOUNTED ATTENUATOR
- TRAFFIC OR PEDESTRIAN SIGNAL
- SIGN

SUGGESTED WORK ZONE WARNING SIGN SPACING

ROAD TYPE	DISTANCE BETWEEN SIGNS (FEET)		
	A	B	C
LOCAL OR LOW VOLUME ROADWAYS	350	350	350
MOST OTHER ROADWAYS	500	500	500
FREEWAYS AND EXPRESSWAYS	1,000	1,500	2,640

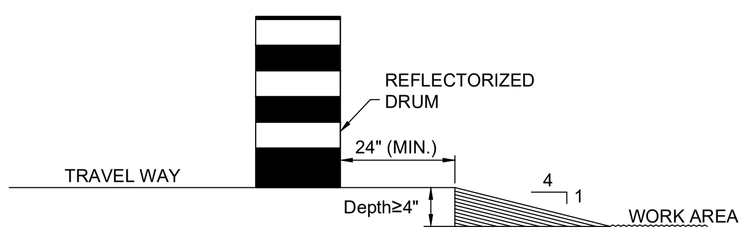

LATERAL DROP OFF-DETAIL
NOT TO SCALE

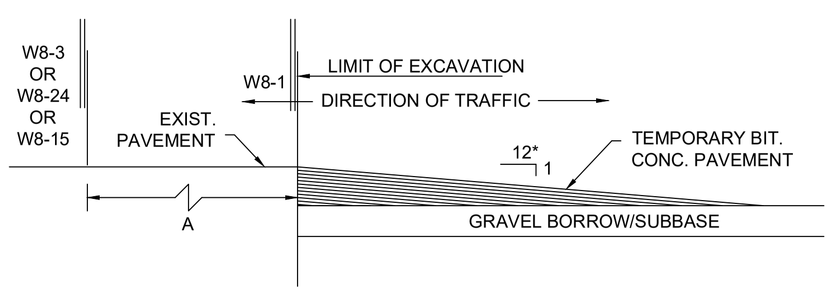

* - INCREASE SLOPE RATIO FOR HIGHER SPEEDS

LONGITUDINAL DROP-OFF DETAIL
NOT TO SCALE

LATERAL AND LONGITUDINAL DROP-OFF DETAILS

PEDESTRIAN TYPICAL DETAILS

NOTES:

1. CURB RAMPS SHALL BE 48 IN. MINIMUM WIDTH WITH A FIRM, STABLE AND NON-SLIP SURFACE.
2. PROTECTIVE EDGING WITH A 2 IN. MINIMUM HEIGHT SHALL BE INSTALLED WHEN THE CURB RAMP OR LANDING PLATFORM HAS A VERTICAL DROP OF 6 IN. OR GREATER OR HAS A SIDE APRON SLOP STEEPER THAN 1:3 (33%). PROTECTIVE EDGING SHOULD BE CONSIDERED WHEN THE CURB RAMPS OR LANDING PLATFORMS HAVE A VERTICAL DROP OF 3 IN. OR MORE.
3. DETECTABLE EDGING WITH 6 IN. MINIMUM HEIGHT AND CONTRASTING COLOR SHALL BE INSTALLED ON ALL CURB RAMP LANDINGS WHERE THE WALKWAY CHANGES DIRECTION (TURNS).
4. THE CURB RAMP WALKWAY AND LANDING AREA SURFACE SHALL BE OF A SOLID CONTINUOUS CONTRASTING COLOR ABUTTING UP TO THE EXISTING SIDEWALK.
5. CURB RAMPS AND LANDINGS SHOULD HAVE A 1:50 (2%) MAX CROSS-SLOPE.
6. CLEAR SPACE OF 48x48 IN. MINIMUM SHALL BE PROVIDED ABOVE AND BELOW THE CURB RAMP.
7. WATER FLOW IN THE GUTTER SYSTEM SHALL HAVE MINIMAL RESTRICTION.
8. LATERAL JOINTS OR GAPS BETWEEN SURFACES SHALL BE LESS THAN 0.5 IN. WIDTH.
9. CHANGES BETWEEN SURFACE HEIGHTS SHOULD NOT EXCEED 0.5 IN. LATERAL EDGES SHOULD BE VERTICAL UP TO 0.25 IN. HIGH, AND BEVELED AT 1:2 BETWEEN 0.25 IN. AND 0.5 IN. HEIGHT.
10. IF A TEMPORARY PEDESTRIAN RAMP LEADS TO A CROSSWALK, THEN A DETECTABLE WARNING PAD MUST BE ADHERED TO THE BASE OF THE RAMP. IF IT LEADS TO A PROTECTED PEDESTRIAN BYPASS THAT DOES NOT CONFLICT WITH VEHICULAR TRAFFIC, THEN A PAD SHALL NOT BE INSTALLED ON THE RAMP.

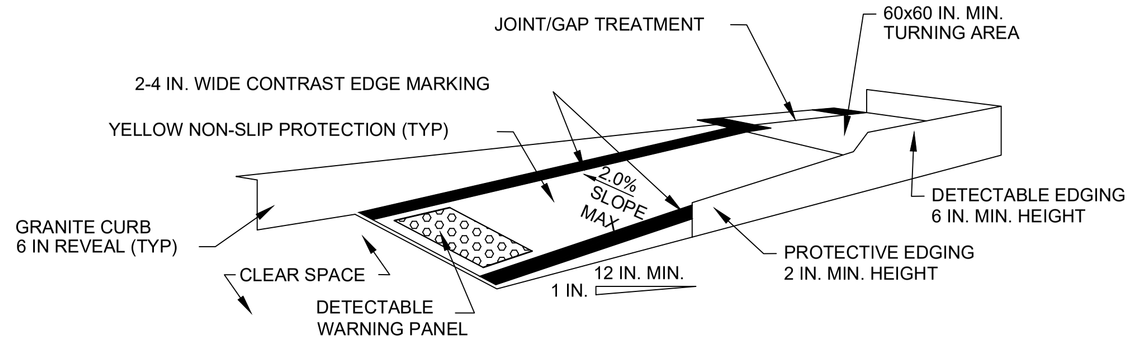

TEMPORARY CURB RAMP-PARALLEL TO CURB

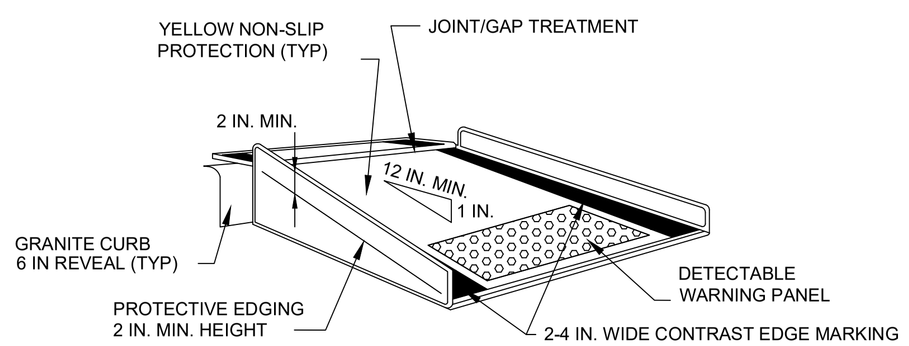

TEMPORARY CURB RAMP-PERPENDICULAR TO CURB

- WHEN EXISTING PEDESTRIAN FACILITIES ARE DISRUPTED, CLOSED, OR RELOCATED IN A TTC ZONE, TEMPORARY FACILITIES SHALL BE PROVIDED AND THEY SHALL BE DETECTABLE AND INCLUDE ACCESSIBILITY FEATURES CONSISTENT WITH THE FEATURES PRESENT IN THE EXISTING PEDESTRIAN FACILITY.
- A PEDESTRIAN CHANNELIZING DEVICE THAT IS DETECTABLE BY A PERSON WITH A VISUAL DISABILITY TRAVELING WITH THE AID OF A LONG CANE SHALL BE PLACED ACROSS THE FULL WIDTH OF THE CLOSED SIDEWALK.
- WHEN USED, TEMPORARY RAMPS SHALL COMPLY WITH AMERICANS WITH DISABILITIES ACT (SEE FIGURES PED-1 & PED-2).
- THE ALTERNATE PATHWAY SHOULD HAVE A SMOOTH CONTINUOUS HARD SURFACE FOR THE ENTIRE LENGTH OF THE TEMPORARY PEDESTRIAN FACILITY.
- THE PROTECTIVE REQUIREMENTS OF A TTC SITUATION HAVE PRIORITY IN DETERMINING THE NEED FOR TEMPORARY TRAFFIC BARRIERS AND THEIR USE IN THIS SITUATION SHOULD BE BASED ON ENGINEERING JUDGMENT.
- AUDIBLE INFORMATION DEVICES SHOULD BE CONSIDERED WHERE MIDBLOCK CLOSINGS AND CHANGED CROSSWALK AREAS CAUSE INADEQUATE COMMUNICATION TO BE PROVIDED TO PEDESTRIANS WHO HAVE VISUAL DISABILITIES.

AUDIBLE DEVICES

FOR LONG TERM SIDEWALK CLOSURES (AT A MINIMUM OVERNIGHT) A FORM OF SPEECH MESSAGING FOR PEDESTRIANS WITH VISUAL DISABILITIES SHALL BE PROVIDED. AUDIBLE INFORMATION DEVICES SUCH AS DETECTABLE BARRIERS OR BARRICADES AND OTHER PASSIVE PEDESTRIAN ACTIVATION (MOTION ACTIVATED) DEVICES SHOULD BE CONSIDERED FOR THESE CASES. THESE AUDIBLE DEVICES CAN BE MOUNTABLE OR STAND ALONE.

TAPER LENGTH CRITERIA FOR TEMPORARY TRAFFIC CONTROL ZONES

TYPE OF TAPER	TAPER LENGTH (L)*
MERGING TAPER	AT LEAST L
SHIFTING TAPER	AT LEAST 0.5L
SHOULDER TAPER	AT LEAST 0.33L
ONE-LANE, TWO-WAY TRAFFIC TAPER	50 FT MIN. 100 FT MAX.
DOWNSTREAM TAPER	50 FT MIN. 100 FT MAX. PER LANE

FORMULAS FOR DETERMINING TAPER LENGTHS

SPEED LIMIT (S)	TAPER LENGTH (L) FEET
40 MPH OR LESS	$L = \frac{WS^2}{60}$
45 MPH OR MORE	L= WS

WHERE: L = TAPER LENGTH IN FEET

W = WIDTH OF OFFSET IN FEET

S = POSTED SPEED LIMIT, OR OFF-PEAK 85TH-PERCENTILE SPEED PRIOR TO WORK STARTING, OR THE ANTICIPATED OPERATING SPEED IN MPH

608930_HD8(TEMPORARY TRAFFIC CONTROL PLAN).DWG Plotted on 28-Oct-2022 4:23 PM

Proposal No. 608930-128034

A00869 - 72

608930_HD8(TEMPORARY TRAFFIC CONTROL PLAN).DWG Plotted on 28-Oct-2022 4:23 PM

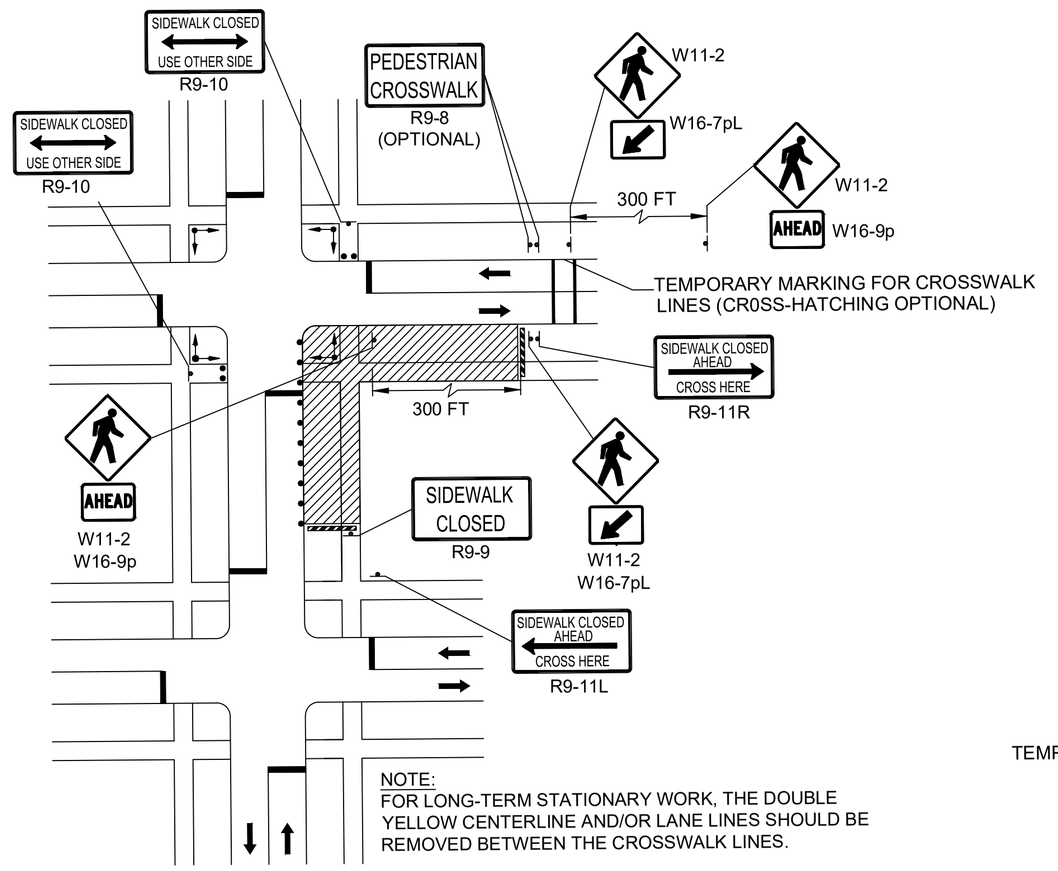

NOTE:
FOR LONG-TERM STATIONARY WORK, THE DOUBLE YELLOW CENTERLINE AND/OR LANE LINES SHOULD BE REMOVED BETWEEN THE CROSSWALK LINES.

PEDESTRIAN DETOUR

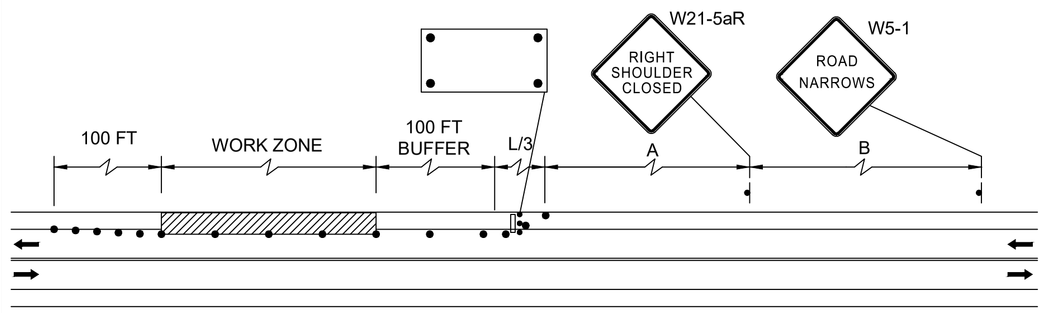

TWO LANE ROAD SHOULDER CLOSED

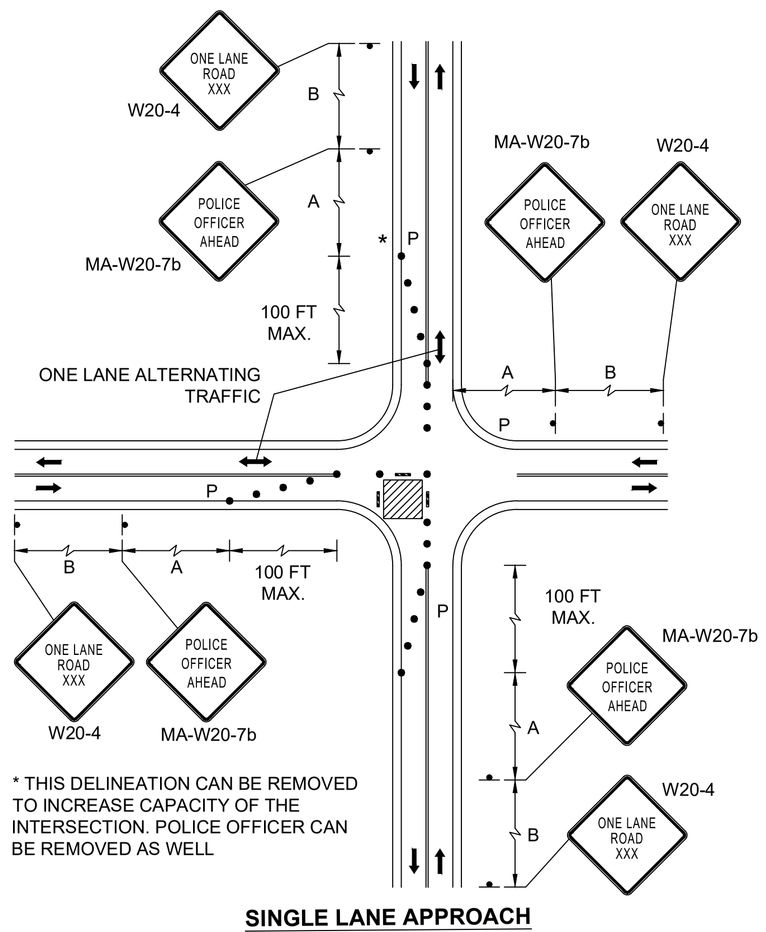

* THIS DELINEATION CAN BE REMOVED TO INCREASE CAPACITY OF THE INTERSECTION. POLICE OFFICER CAN BE REMOVED AS WELL

SINGLE LANE APPROACH ONE QUADRANT CLOSURE

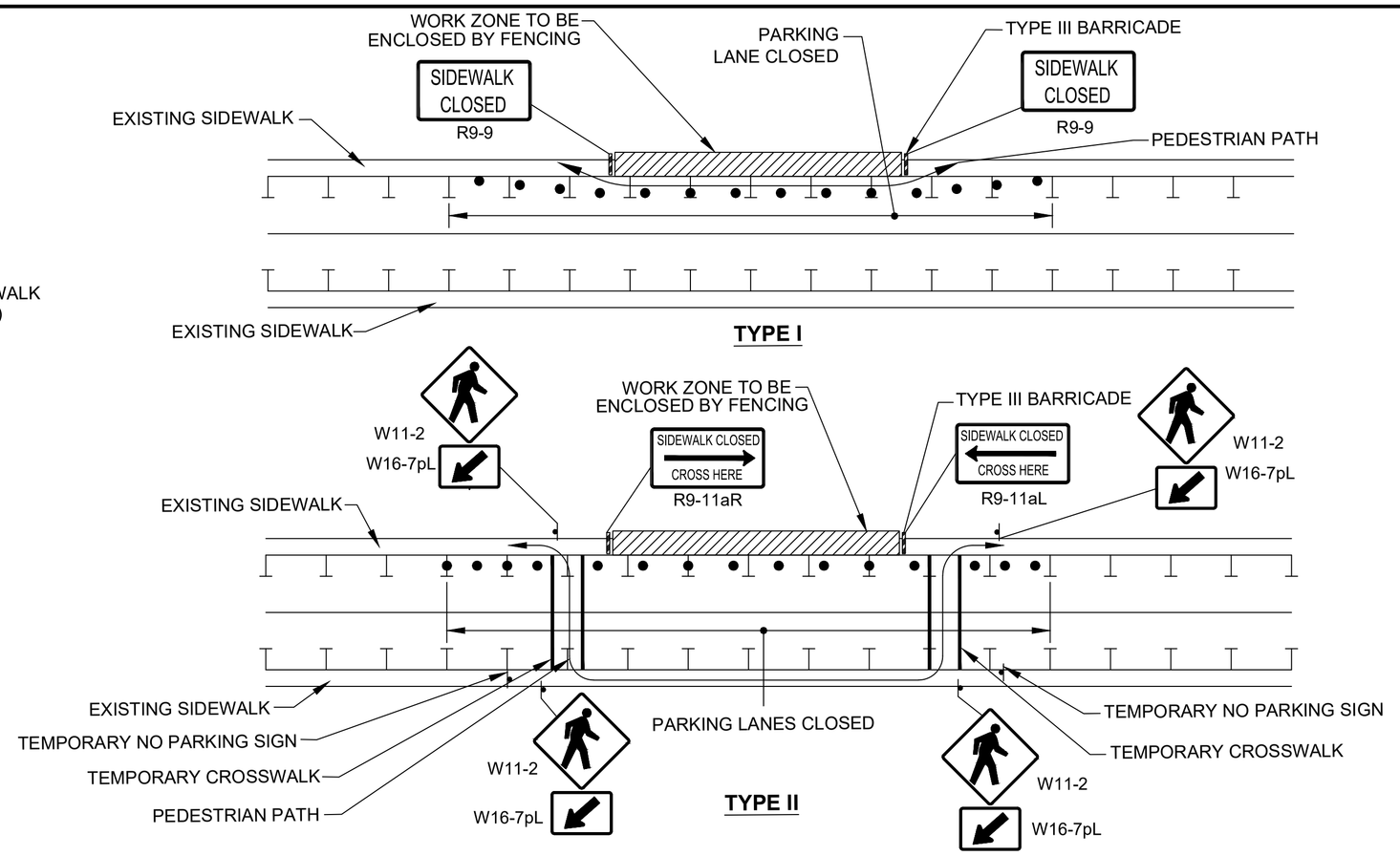

TYPE I

TYPE II

NOTES:
1. ADDITIONAL ADVANCE WARNING MAY BE NECESSARY.
2. CONTROLS ONLY FOR PEDESTRIAN TRAFFIC ARE SHOWN. VEHICULAR TRAFFIC SHOULD BE HANDLED AS SHOWN ELSEWHERE.
3. STREET LIGHTING SHOULD BE CONSIDERED WHEN LOCATING CONTROL DEVICES.
4. IF THE WORK ZONE DOES NOT PERMIT PEDESTRIANS TO TRAVEL ADJACENT TO IT AS SHOWN IN PEDESTRIAN BYPASS TYPE I, TEMPORARY CROSSWALKS WITH APPROPRIATE SIGNS SHOULD BE INSTALLED TO CROSS PEDESTRIANS TO THE OPPOSITE SIDE OF THE STREET AS SHOWN IN PEDESTRIAN BYPASS TYPE II, AND AS DIRECTED BY THE ENGINEER. TEMPORARY CURB RAMPS WILL BE REQUIRED AT ALL TEMPORARY CROSSWALK LOCATIONS.
5. BYPASS IS TO BE USED IN CONJUCTION WITH THE PROPOSED LANE CLOSURE DETAILS AND DURING CONSTRUCTION STAGING, AS DIRECTED BY THE ENGINEER.
6. THE TEMPORARY SIDEWALK SHOULD BE A MINIMUM OF 4 FEET WIDE. IF THIS WALKWAY EXCEEDS 200 FEET THEN A 5 FOOT X 5 FOOT PASSING ZONE. (FOR SHORT TERM SETUPS < 10 HOURS, THIS CONDITION MAY BE WAIVED. A NOTE WOULD NEED TO BE INCLUDED IN THE TTCP THAT STATES HOW THE CONTRACTOR SHOULD ADDRESS THIS ISSUE.)

PEDESTRIAN BYPASS

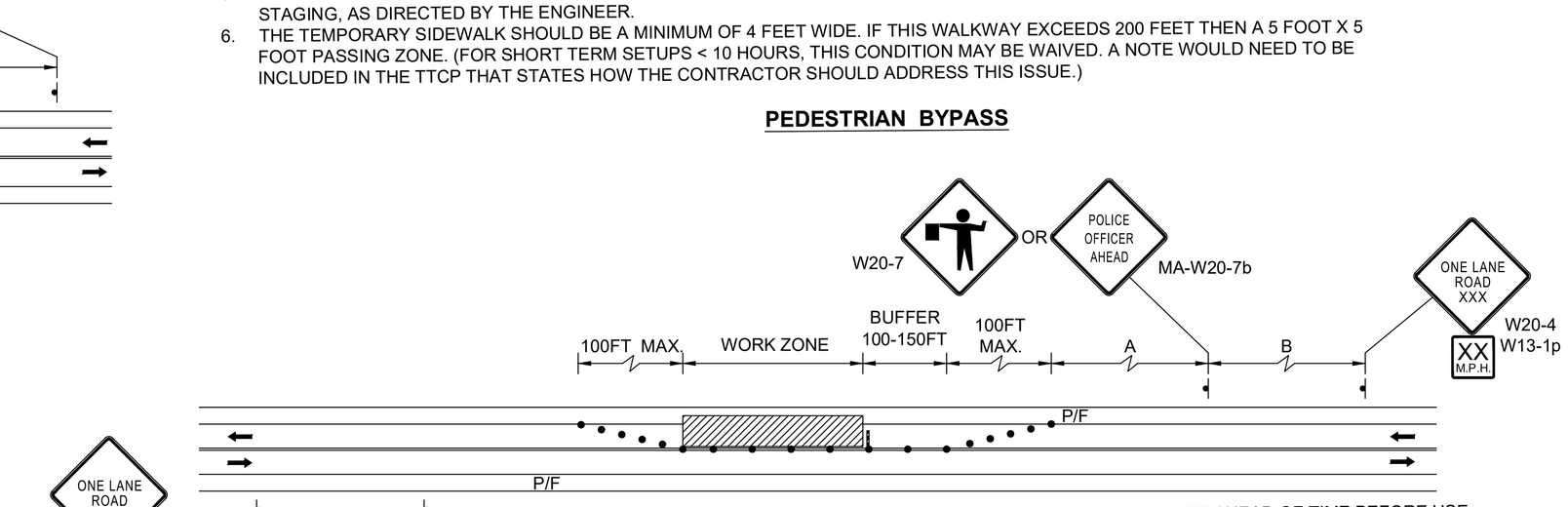

NOTE: COORDINATE AHEAD OF TIME BEFORE USE OF TWO LANE ROAD ONE LANE ALTERNATING TRAFFIC CONTROL.

TWO LANE ROAD ONE LANE ALTERNATING TRAFFIC

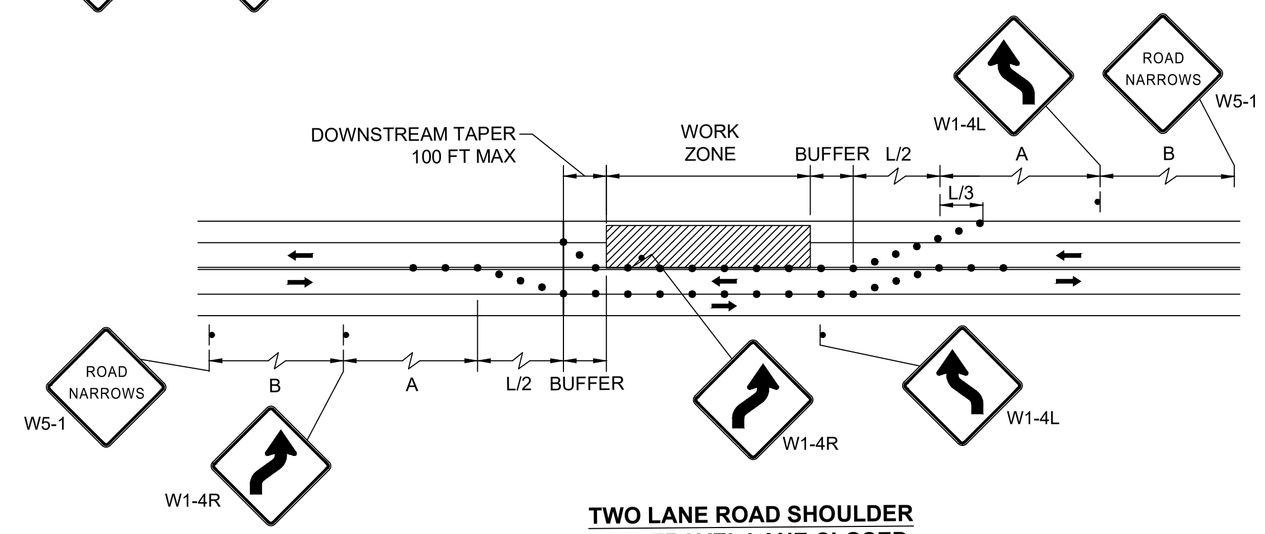

TWO LANE ROAD SHOULDER AND TRAVEL LANE CLOSED

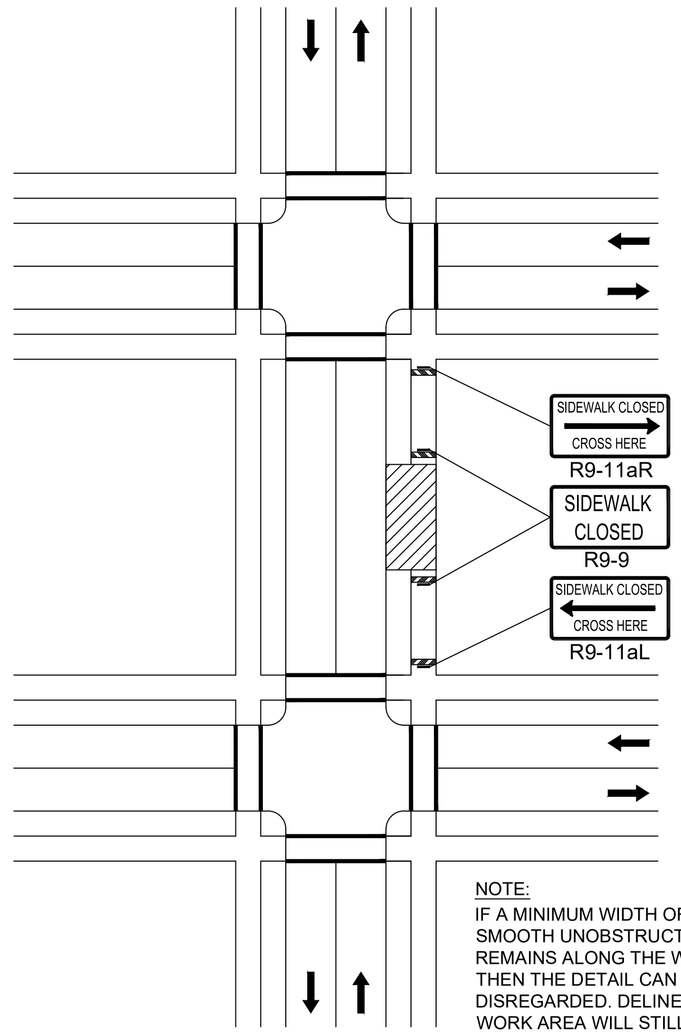

NOTE:
IF A MINIMUM WIDTH OF 48" OF SOLID SMOOTH UNOBSTRUCTED SURFACE REMAINS ALONG THE WORK AREA THEN THE DETAIL CAN BE DISREGARDED. DELINEATION OF THE WORK AREA WILL STILL BE REQUIRED. All PEDESTRIAN DETOUR ROUTES SHALL BE ADA/MAAB COMPLIANT IN THEIR ENTIRETY.

SIDEWALK CLOSED WITHOUT DETOUR

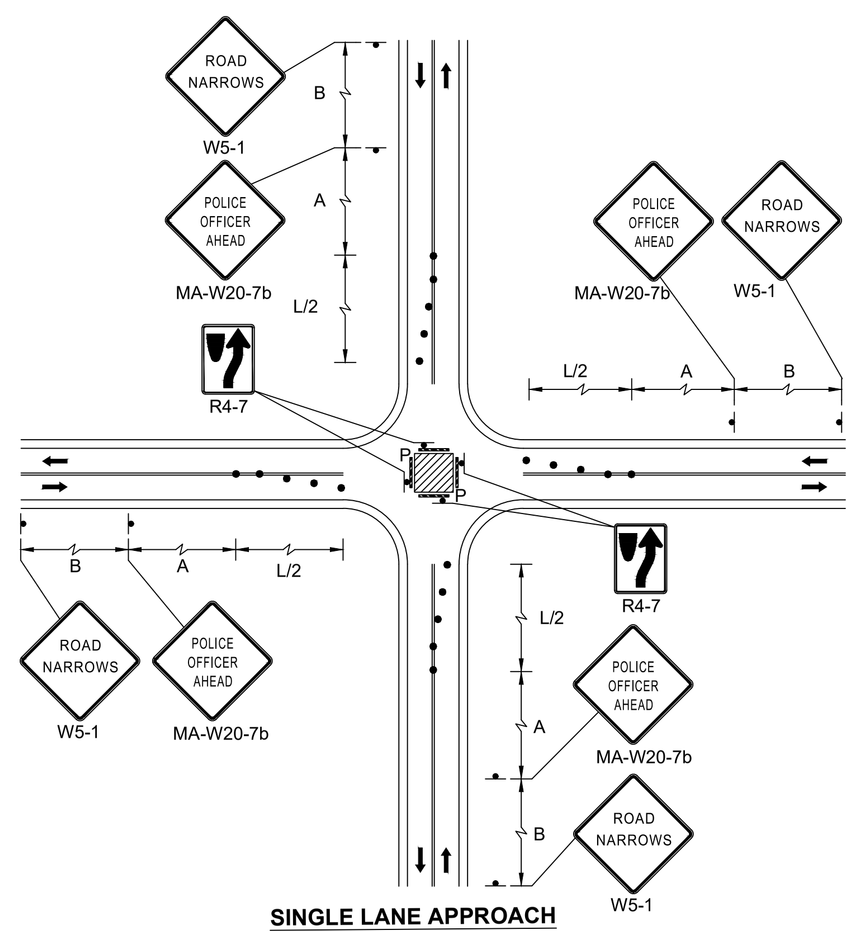

SINGLE LANE APPROACH CENTER CLOSURE

TRAFFIC SIGN SUMMARY

IDENTIFICATION NUMBER	SIZE OF SIGN (in)			TEXT DIMENSIONS (in)			COLOR			NUMBER OF SIGNS REQUIRED	UNIT AREA (SF)	TOTAL AREA (SF)
	WIDTH	HEIGHT	LEGEND	LETTER HEIGHT	VERTICAL SPACING	ARROW RTE. MKR	BACK-GROUND	LEGEND	BORDER			
MA-D3-1a	56	12	SEE RIGHT	6D/4D	3 3	N/A	FL. ORANGE WHITE	BLACK BLACK	BLACK BLACK	6	4.67	28.00
MA-R2-10a	48	36	WORK ZONES SPEEDING FINES DOUBLED	MASSDOT STANDARD SIGN			FL. ORANGE WHITE	BLACK BLACK	BLACK BLACK	13	12.00	156.00
MA-R2-10e	36	48	END ROAD WORK DOUBLE FINES END				FL. ORANGE WHITE	BLACK BLACK	BLACK BLACK	13	12.00	156.00
R4-7	24	30		SEE 2009 MANUAL ON UNIFORM TRAFFIC CONTROL DEVICES FOR STREETS AND HIGHWAYS			WHITE	BLACK	BLACK	4	5.00	20.00
R9-8	36	18	PEDESTRIAN CROSSWALK				WHITE	BLACK	BLACK	2	4.50	9.00
R9-9	24	12	SIDEWALK CLOSED				WHITE	BLACK	BLACK	5	2.00	10.00
R9-10	24	12	SIDEWALK CLOSED USE OTHER SIDE				WHITE	BLACK	BLACK	2	2.00	4.00
R9-11aL	24	18	SIDEWALK CLOSED AHEAD CROSS HERE				WHITE	BLACK	BLACK	3	3.00	9.00
R9-11aR	24	18	SIDEWALK CLOSED AHEAD CROSS HERE				WHITE	BLACK	BLACK	3	3.00	9.00
R11-2	48	30	ROAD CLOSED				WHITE	BLACK	BLACK	2	10.00	20.00
R11-4	60	30	ROAD CLOSED TO THRU TRAFFIC				WHITE	BLACK	BLACK	1	12.50	12.50
W1-4L	36	36					FL. ORANGE	BLACK	BLACK	2	9.00	18.00
W1-4R	36	36					FL. ORANGE	BLACK	BLACK	2	9.00	18.00
W5-1	36	36	ROAD NARROWS				FL. ORANGE	BLACK	BLACK	7	9.00	63.00
W11-2	36	36					FL. YELLOW/ GREEN	BLACK	BLACK	8	9.00	72.00
W13-1p	18	18	XX MPH				FL. ORANGE	BLACK	BLACK	2	2.25	4.50
W16-9p	24	12	AHEAD				FL. YELLOW/ GREEN	BLACK	BLACK	2	2.00	4.00
W16-7pL	24	12					FL. YELLOW/ GREEN	BLACK	BLACK	6	2.00	12.00
W20-1	36	36	ROAD WORK AHEAD				ORANGE	BLACK	BLACK	13	9.00	117.00
W20-4	36	36	ONE LANE ROAD AHEAD				FL. ORANGE	BLACK	BLACK	6	9.00	54.00
W21-5aR	36	36	RIGHT SHOULDER CLOSED				FL. ORANGE	BLACK	BLACK	1	9.00	9.00
W20-7	36	36					FL. ORANGE	BLACK	BLACK	2	9.00	18.00
MA-W20-7b	36	36	POLICE OFFICER AHEAD	MASSDOT STANDARD SIGN			FL. ORANGE	BLACK	BLACK	10	9.00	90.00

TRAFFIC SIGN SUMMARY

IDENTIFICATION NUMBER	SIZE OF SIGN (in)			TEXT DIMENSIONS (in)			COLOR			NUMBER OF SIGNS REQUIRED	UNIT AREA (SF)	TOTAL AREA (SF)
	WIDTH	HEIGHT	LEGEND	LETTER HEIGHT	VERTICAL SPACING	ARROW RTE. MKR	BACK-GROUND	LEGEND	BORDER			
M4-8	24	12	DETOUR	SEE 2009 MANUAL ON UNIFORM TRAFFIC CONTROL DEVICES FOR STREETS AND HIGHWAYS			FL. ORANGE	BLACK	BLACK	1	2.00	2.00
M4-8a	24	18	END DETOUR				FL. ORANGE	BLACK	BLACK	2	3.00	6.00
M4-9L	30	24	DETOUR				FL. ORANGE	BLACK	BLACK	3	5.00	15.00
M4-9R	30	24	DETOUR				FL. ORANGE	BLACK	BLACK	3	5.00	15.00

ADVANCED SIGNING SCHEMATIC

N.T.S.

NOTE:
ON SIDE STREETS, W20-1 SIGNS SHALL BE LOCATED 500' FROM THE LIMIT OF WORK, MA-R2-10a SIGNS SHALL BE LOCATED 250' FROM THE LIMIT OF WORK, AND MA-R2-10e SHALL BE LOCATED 100' FROM THE LIMIT OF WORK UNLESS OTHERWISE NOTED.

LEGEND		
A	B	C
ROAD WORK AHEAD	WORK ZONES SPEEDING FINES DOUBLED	END ROAD WORK DOUBLE FINES END
W20-1	*MA-R2-10a*	*MA-R2-10e*

Manchester St
MA-D3-1a

LAWRENCE
LMRC RAIL TRAIL

STATE	FED. AID PROJ. NO.	SHEET NO.	TOTAL SHEETS
MA	-	55	225
PROJECT FILE NO.	608930		

TEMPORARY TRAFFIC CONTROL PLANS - 3 OF 4

608930_HD8(TEMPORARY TRAFFIC CONTROL PLAN).DWG Plotted on 28-Oct-2022 4:23 PM

Proposal No. 608930-128034

A008690 - 74

FOR PERMITTING PURPOSES - NOT FOR CONSTRUCTION

LAWRENCE
LMRC RAIL TRAIL

STATE	FED. AID PROJ. NO.	SHEET NO.	TOTAL SHEETS
MA	-	56	225
PROJECT FILE NO.	608930		

TEMPORARY TRAFFIC CONTROL PLANS - 4 OF 4

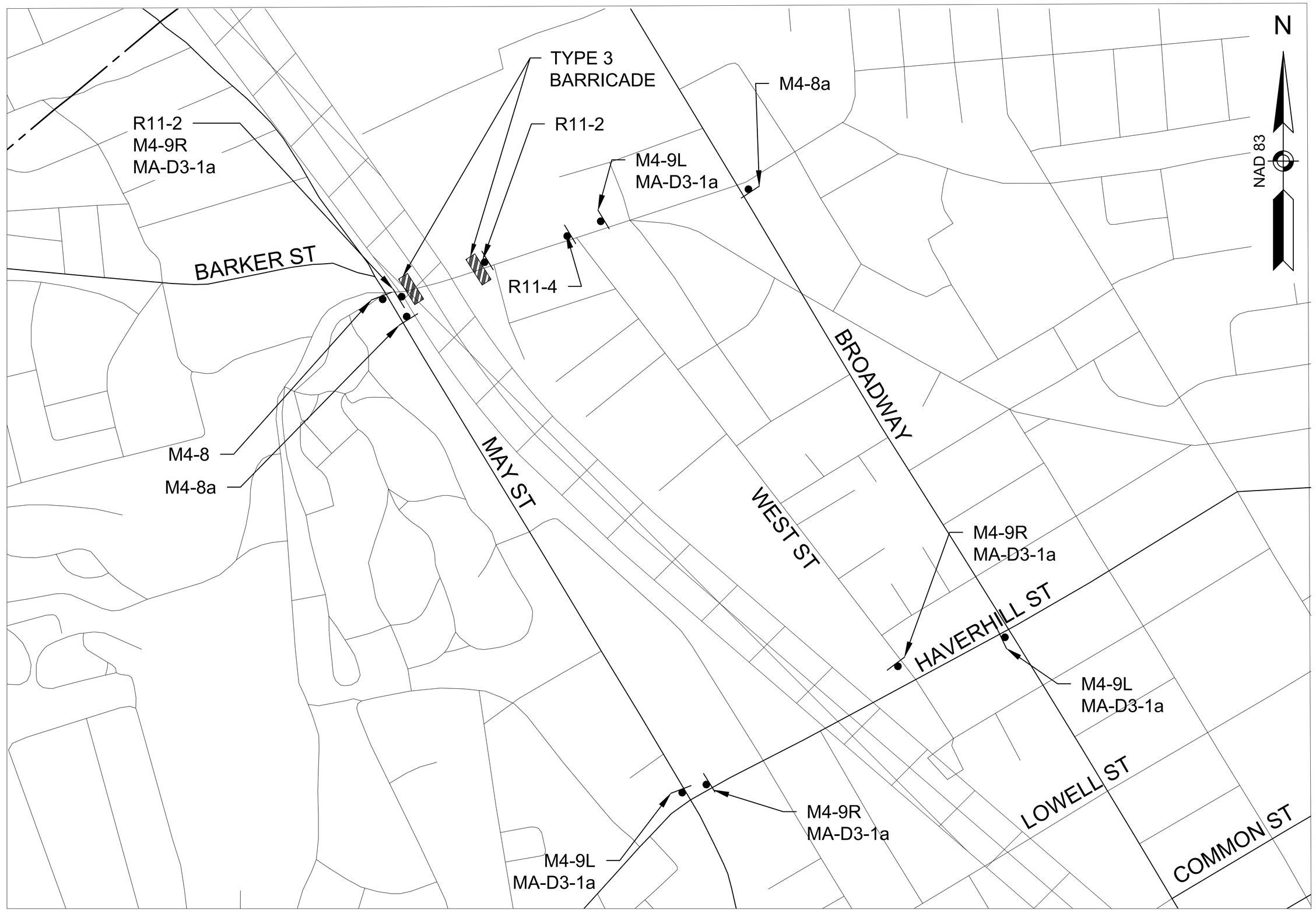

MANCHESTER STREET DETOUR
N.T.S.

DETOUR NOTES :

1. THE MERRIMACK VALLEY REGIONAL TRANSIT AUTHORITY (MVRTA) BUS ROUTE 41 TRAVERSES THE PROJECT. THE CONTRACTOR SHALL NOTIFY THE MVRTA AT LEAST ONE MONTH BEFORE ANY DETOURS ARE IMPLEMENTED. THE CONTRACTOR SHALL CONTACT THE MVRTA OPERATIONS OFFICE AT 978-469-6878, EXT. 144
2. CONTRACTOR SHALL REMOVE OR COVER DETOUR SIGNS WHEN NOT IN USE
3. DETOUR MAY ONLY BE IMPLEMENTED BETWEEN THE HOURS OF 9 AM AND 3 PM, MON-FRI, UNLESS OTHERWISE DIRECTED BY THE ENGINEERS
4. POLICE DETAILS SHALL BE STATIONED ON EITHER END OF THE WORK ZONE TO STOP WESTBOUND TRAFFIC, AS NEEDED, TO ALLOW LARGE TRUCKS, BUSES, AND EMERGENCY VEHICLES TRAVELING IN THE EASTBOUND THROUGH THE WORK ZONE. EMERGENCY ACCESS TO AND FROM AMES STREET AND ALL OTHER SIDE STREETS SHALL BE PROVIDED THROUGH THE WORK ZONE AT ALL TIMES.

FOR PERMITTING PURPOSES - NOT FOR CONSTRUCTION

608930_HD8(TEMPORARY TRAFFIC CONTROL PLAN).DWG Plotted on 28-Oct-2022 4:23 PM
Proposal No. 608930-128034
A00869 - 75

608930_HD8A(UTILITY PLANS).DWG Plotted on 28-Oct-2022 4:24 PM

LAWRENCE
LMRC RAIL TRAIL

STATE	FED. AID PROJ. NO.	SHEET NO.	TOTAL SHEETS
MA	-	57	225
	PROJECT FILE NO. 608930		

UTILITY PLANS - 1 OF 15

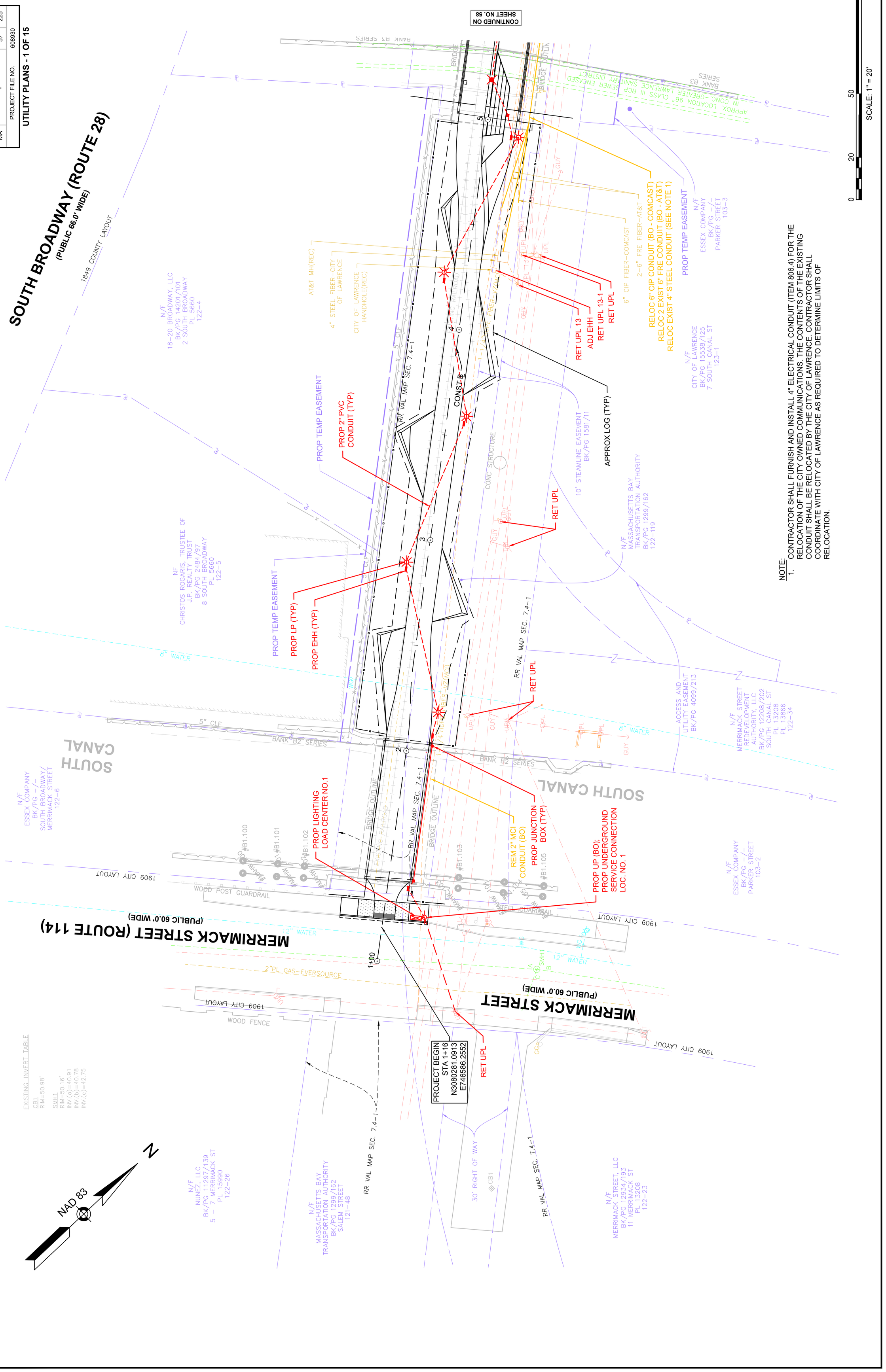

NOTE:
1. CONTRACTOR SHALL FURNISH AND INSTALL 4" ELECTRICAL CONDUIT (ITEM 806.4) FOR THE RELOCATION OF THE CITY OWNED COMMUNICATIONS. THE CONTENTS OF THE EXISTING CONDUIT SHALL BE RELOCATED BY THE CITY OF LAWRENCE. CONTRACTOR SHALL COORDINATE WITH CITY OF LAWRENCE AS REQUIRED TO DETERMINE LIMITS OF RELOCATION.

FOR PERMITTING PURPOSES - NOT FOR CONSTRUCTION

608930_HD8A(UTILITY PLANS).DWG Plotted on 28-Oct-2022 4:24 PM

LAWRENCE
LMRC RAIL TRAIL

STATE	FED. AID PROJ. NO.	SHEET NO.	TOTAL SHEETS
MA	-	59	225
PROJECT FILE NO. 608930			

UTILITY PLANS - 2 OF 15

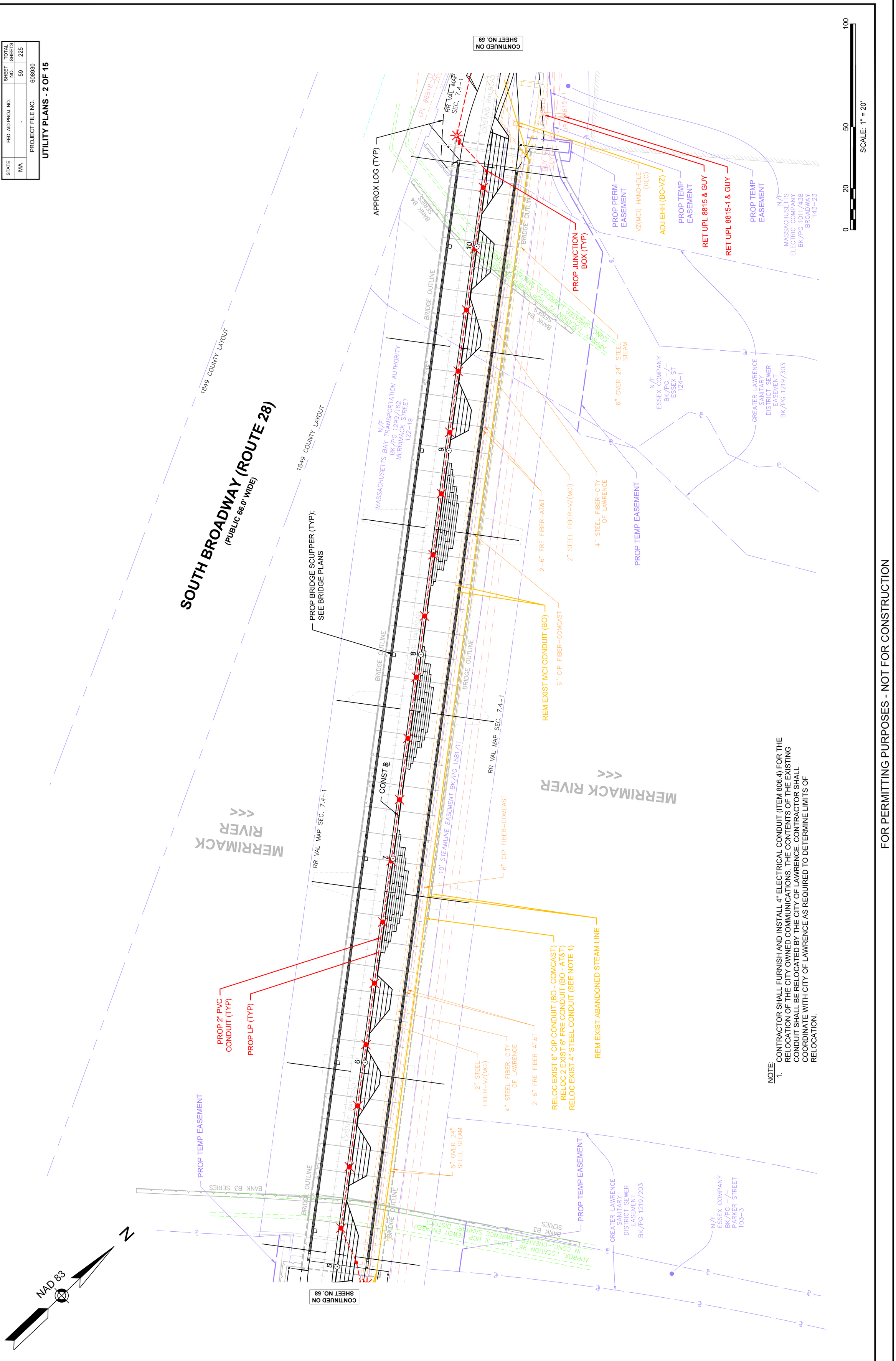

NOTE:
1. CONTRACTOR SHALL FURNISH AND INSTALL 4" ELECTRICAL CONDUIT (ITEM 806.4) FOR THE RELOCATION OF THE CITY OWNED COMMUNICATIONS. THE CONTENTS OF THE EXISTING CONDUIT SHALL BE RELOCATED BY THE CITY OF LAWRENCE. CONTRACTOR SHALL COORDINATE WITH CITY OF LAWRENCE AS REQUIRED TO DETERMINE LIMITS OF RELOCATION.

FOR PERMITTING PURPOSES - NOT FOR CONSTRUCTION

608930_HD8A(UTILITY PLANS).DWG Plotted on 28-Oct-2022 4:25 PM

LAWRENCE
LMRC RAIL TRAIL

STATE	FED. AID PROJ. NO.	SHEET NO.	TOTAL SHEETS
MA	-	59	225
	PROJECT FILE NO. 608930		

UTILITY PLANS - 3 OF 15

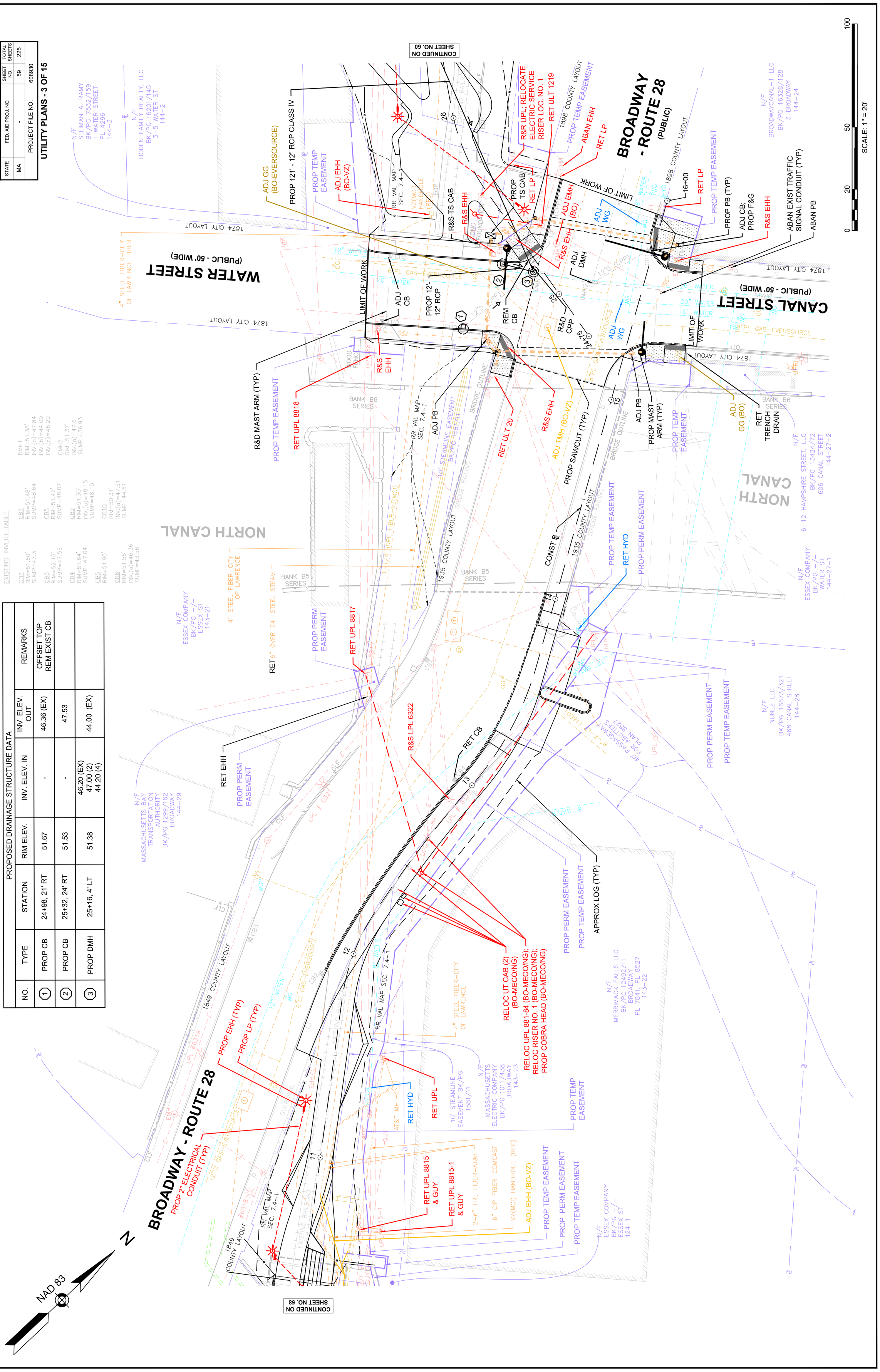

PROPOSED DRAINAGE STRUCTURE DATA

NO.	TYPE	STATION	RIM ELEV.	INV. ELEV. IN	INV. ELEV. OUT	REMARKS
1	PROP CB	24+98, 21' RT	51.67	-	46.36 (EX)	OFFSET TOP REM EXIST CB
2	PROP CB	25+32, 24' RT	51.53	-	47.53	
3	PROP DMH	25+16, 4' LT	51.38	46.20 (EX) 47.00 (2) 44.20 (4)	44.00 (EX)	

FOR PERMITTING PURPOSES - NOT FOR CONSTRUCTION

LAWRENCE
LMRC RAIL TRAIL

STATE	FED. AID PROJ. NO.	SHEET NO.	TOTAL SHEETS
MA	-	60	225
PROJECT FILE NO.	608930		

UTILITY PLANS - 4 OF 15

608930_HDBA(UTILITY PLANS).DWG Plotted on 28-Oct-2022 4:25 PM

Proposal No. 608930-128034

A00869 - 79

PROPOSED DRAINAGE STRUCTURE DATA						
NO.	TYPE	STATION	RIM ELEV.	INV. ELEV. IN	INV. ELEV. OUT	REMARKS
(4)	PROP DMH	26+41, 5' LT	52.45	46.55	45.45	
(5)	PROP OCS	29+39, 20' LT	51.60	49.50	49.50	24"x24" GRATE 4" DIA ORIFICE

NAD 83

N

PROP TEMP EASEMENT

APPROX LOG (TYP)

PROP TEMP EASEMENT

PROP TEMP EASEMENT

RR VAL MAP SEC. 7.4–1

RET UPL 8819

PROP LP (TYP)

PROP EHH (TYP)

PROP 2" PVC CONDUIT (TYP)

PROP TEMP EASEMENT

PROP 295' - 12' RCP CLASS IV

PROP 171' - 6" PERFORATED HDPE

10' STEAMLINE EASEMENT BK/PG 1581/11

RR VAL MAP SEC. 7.4–1

10' STEAMLINE EASEMENT BK/PG 1581/11

N/F
MASSACHUSETTS BAY TRANSPORTATION AUTHORITY
BK/PG 1299/162
CANAL STREET
144–4

N/F
FACELLA REALTY & INVESTMENT CO., INC.
BK/PG 929/394
600A ESSEX ST
PL 4146
144–15

EOP

CONTINUED ON SHEET NO. 59

CONTINUED ON SHEET NO. 61

1–1/4"HDPE FIBER–VZ(MCI)

CONST ℄

RR VAL MAP SEC. 7.4–1

PROP 121' - 12' RCP

PROP TEMP EASEMENT

RET UPL 8820

RET UPL 8821

PROP TEMP EASEMENT

N/F
BERNARDO PENA
BK/PG 6873/44
10 BROADWAY
PL 3415
144–5

N/F
MASSACHUSETTS BAY TRANSPORTATION AUTHORITY
BK/PG 1299/162
CANAL STREET
144–4

N/F
GREGORY REALTY TRUST
BK/PG 6479/193
14 BROADWAY
PL 1919
144–6

1898 COUNTY LAYOUT

BROADWAY - ROUTE 28
(PUBLIC)

1898 COUNTY LAYOUT

N/F
18–20 BROADWAY, LLC
BK/PG 10906/92
20 BROADWAY
144–8

N/F
CRISTIAN RIVAS
BK/PG 14751/181
598 ESSEX ST
144–13

N/F
BROADWAYCANAL–1 LLC
BK/PG 16328/128
3 BROADWAY
144–24

N/F
18–20 BROADWAY, LLC
BK/PG 10927/25
20 BROADWAY
144–9

0 20 50 100

SCALE: 1" = 20'

FOR PERMITTING PURPOSES - NOT FOR CONSTRUCTION

608930_HD8A(UTILITY PLANS).DWG Plotted on 28-Oct-2022 4:26 PM

LAWRENCE
LMRC RAIL TRAIL

STATE	FED. AID PROJ. NO.	SHEET NO.	TOTAL SHEETS
MA	-	61	225
PROJECT FILE NO. 608930			

UTILITY PLANS - 5 OF 15

SCALE: 1" = 20'

FOR PERMITTING PURPOSES - NOT FOR CONSTRUCTION

608930_HD8A(UTILITY PLANS).DWG Plotted on 28-Oct-2022 4:26 PM

LAWRENCE
LMRC RAIL TRAIL

STATE	FED. AID PROJ. NO.	SHEET NO.	TOTAL SHEETS
MA	-	62	225
PROJECT FILE NO. 608930			

UTILITY PLANS - 6 OF 15

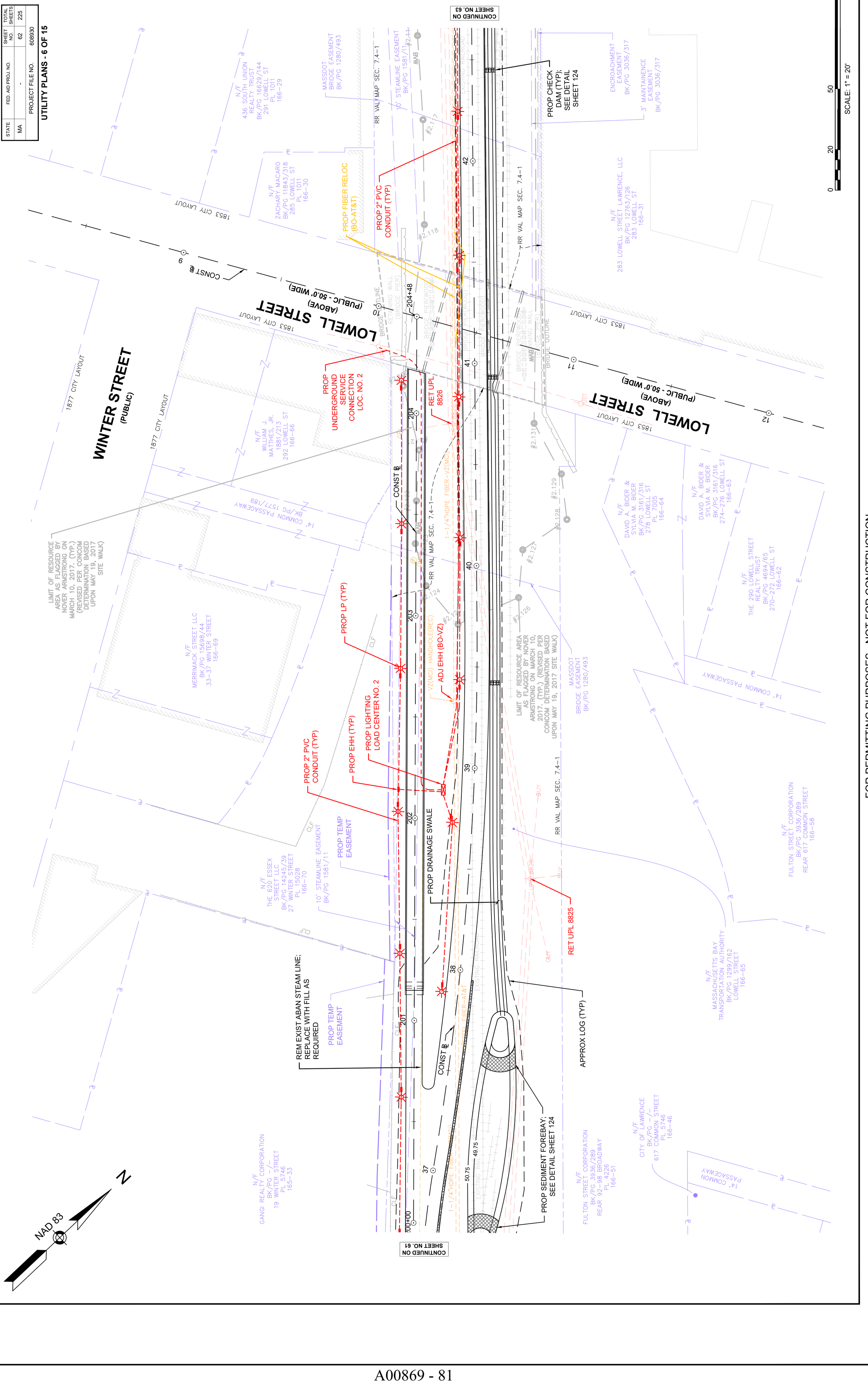

FOR PERMITTING PURPOSES - NOT FOR CONSTRUCTION

608930_HD8A(UTILITY PLANS).DWG Plotted on 28-Oct-2022 4:26 PM

LAWRENCE
LMRC RAIL TRAIL

STATE	FED. AID PROJ. NO.	SHEET NO.	TOTAL SHEETS
MA	-	63	225
	PROJECT FILE NO. 608930		

UTILITY PLANS - 7 OF 15

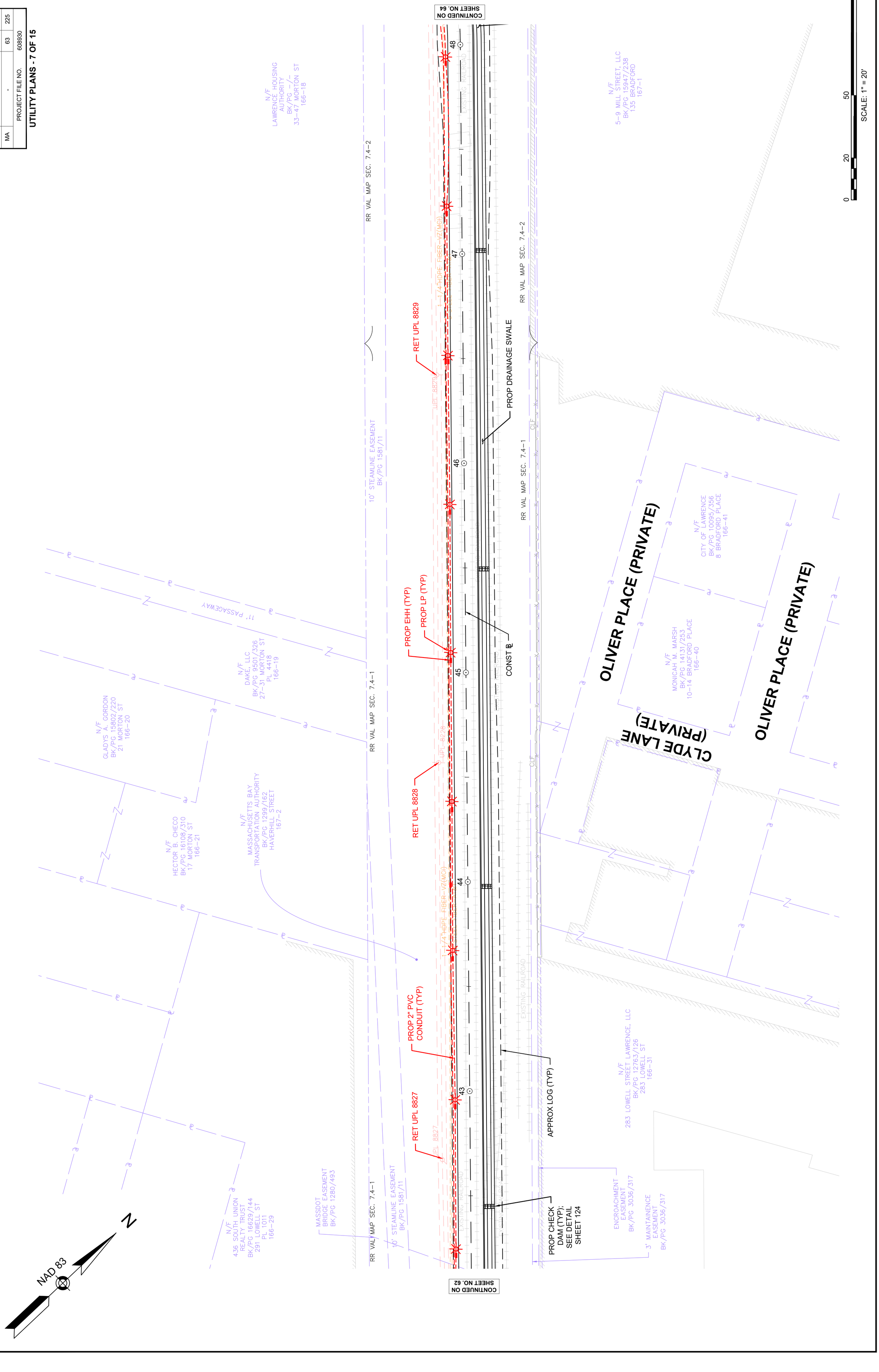

FOR PERMITTING PURPOSES - NOT FOR CONSTRUCTION

6089301_HD8A(UTILITY PLANS).DWG Plotted on 28-Oct-2022 4:27 PM

LAWRENCE
LMRC RAIL TRAIL

STATE	FED. AID PROJ. NO.	SHEET NO.	TOTAL SHEETS
MA	-	64	225
PROJECT FILE NO.		608930	

UTILITY PLANS - 8 OF 15

PROPOSED DRAINAGE STRUCTURE DATA

NO.	TYPE	STATION	RIM ELEV.	INV. ELEV. IN	INV. ELEV. OUT	REMARKS
(6)	EXIST CB	100+69, 16' LT	58.09	54.85	-	ADJ; R&S EX F&G: PROP F&C
(8)	PROP GI	100+87, 17' LT	57.92	-	55.42	OFFSET TOP

NOTE: THERE IS NO PROPOSED STRUCTURE NO. 7

EXISTING INVERT TABLE

CB13
RIM=57.88'
SUMP=55.68

CB14
RIM=58.09'
SUMP=56.79

CB15
RIM=61.42'
INV.(a)=59.17
SUMP=59.17

0 20 50 100
SCALE: 1" = 20'

CONTINUED ON SHEET NO. 65

CONTINUED ON SHEET NO. 63

FOR PERMITTING PURPOSES - NOT FOR CONSTRUCTION

608930_HD8A(UTILITY PLANS).DWG Plotted on 28-Oct-2022 4:27 PM

LAWRENCE
LMRC RAIL TRAIL

STATE	FED. AID PROJ. NO.	SHEET NO.	TOTAL SHEETS
MA	-	65	225
PROJECT FILE NO. 608930			

UTILITY PLANS - 9 OF 15

RAILROAD STREET
(PUBLIC)

CONTINUED ON SHEET NO. 66

CONTINUED ON SHEET NO. 64

FOR PERMITTING PURPOSES - NOT FOR CONSTRUCTION

SCALE: 1" = 20'

NAD 83

PROPOSED DRAINAGE STRUCTURE DATA

NO.	TYPE	STATION	RIM ELEV.	INV. ELEV. IN	INV. ELEV. OUT	REMARKS
9	PROP FES	56+46, 14' LT	-	-	59.90	
10	PROP OCS	56+79, 13' LT	60.70	60.70	59.70	BEEHIVE OCS 12" DIA GRATE

EXISTING INVERT TABLE
SMH2
RIM=61.18'

608930_HD8A(UTILITY PLANS).DWG Plotted on 28-Oct-2022 4:27 PM

LAWRENCE
LMRC RAIL TRAIL

STATE	FED. AID PROJ. NO.	SHEET NO.	TOTAL SHEETS
MA	-	66	225
PROJECT FILE NO.	608930		

UTILITY PLANS - 10 OF 15

RAILROAD STREET
(PUBLIC)

BOURGOIN SQUARE PARK

HUBBARD PLACE
(PUBLIC)

CONTINUED ON SHEET NO. 67

CONTINUED ON SHEET NO. 65

PROP 102'-6" PERFORATED HDPE
R&R BOLLARD IN PLACE (BO)
UPGRADE UPL 8016 IN PLACE (BO - NG/MECO)
PROP 32'-6" PERFORATED HDPE
RET UPL 8015
RET BOLLARD
PROP 94' - 12" CLASS IV RCP
PROP TEMP EASEMENT
PROP 80'-6" PERFORATED HDPE
RET UPL 8014
ADJ HH (BO-VZ)
PROP TEMP EASEMENT
PROP 96'-6" PERFORATED HDPE
PROP EHH (TYP)
PROP LP (TYP)
PROP PERM EASEMENT
PROP TEMP EASEMENT
PROP 2" PVC CONDUIT (TYP)
PROP 34' - 12" RCP: LEVEL (62.0')
APPROX LOG (TYP)
RR VAL MAP SEC. 7.4–2
CONST ℄
CITY LAYOUT
CLF
POST

N/F HUDELSE O PERALTA BK/PG 15321/282 97 RAILROAD ST 190–4
N/F LUZ M. ANDUJAR & CRITIAN MANUEL GARCIA BK/PG 10051/321 97 ½ RAILROAD ST 190–3–2
N/F MARIA VENTURA BK/PG 11988/44 91–93 RAILROAD ST 190–5
N/F HECTOR R. CID & ALTAGRACIA CID BK/PG 13837/207 89 RAILROAD ST 190–6
N/F JOSHUA V. ARIAS BK/PG 12921/222 83–87 RAILROAD ST 190–7
N/F OBIPIO ORTEGA GONZALES & LOURDES ORTEGA BK/PG 16437/50 81 RAILROAD ST 190–8
N/F SOKIA PHY & SOPHORN PHY MASTER DEED BK/PG 15225/303 73–75 RAILROAD STREET 190–10
N/F 57–71 RAILROAD STREET CONDOMINIUM MASTER DEED BK/PG 3301/42 57–71 RAILROAD STREET 189–1
N/F MASSACHUSETTS BAY TRANSPORTATION AUTHORITY BK/PG 1299/162 MERRIMACK STREET 212–24
N/F JOHN SHEA CO BK/PG –/– RAILROAD STREET 189–44
N/F JACQUES OUELLET & LOUISE OUELLET BK/PG 1341/440 55 RAILROAD ST 189–46
10' STEAMLINE EASEMENT BK/PG 1581/11
N/F CITY OF LAWRENCE (SERGEANT LUCIEN E. BOURGOIN SQUARE PARK) BK/PG 581/323 BK/PG 650/548 WEST STREET 190–18
N/F JE ENTERPRISE INC. BK/PG 15389/123 142 WEST STREET 190–17
N/F 130–136 WEST STREET, LLC CERT# 15412 WEST STREET 190–15

0 20 50 100
SCALE: 1" = 20'

NAD 83 N

PROPOSED DRAINAGE STRUCTURE DATA

NO.	TYPE	STATION	RIM ELEV.	INV. ELEV. IN	INV. ELEV. OUT	REMARKS
11	PROP FES	59+44, 17' LT	-	62.00	-	
12	PROP FES	59+77, 12' LT	-	62.00	-	
13	PROP FES	60+88, 15' LT	-	62.50	-	
14	PROP OCS	61+92, 13' LT	64.80	64.30 63.00	63.00	24"X24" GRATE 4"VX8"H ORIFICE

FOR PERMITTING PURPOSES - NOT FOR CONSTRUCTION

608930_HD8A(UTILITY PLANS).DWG Plotted on 28-Oct-2022 4:28 PM

LAWRENCE
LMRC RAIL TRAIL

STATE	FED. AID PROJ. NO.	SHEET NO.	TOTAL SHEETS
MA	-	67	225
PROJECT FILE NO.	608930		

UTILITY PLANS - 11 OF 15

SCALE: 1" = 20'

MAY STREET (PUBLIC)

BLAKELIN STREET (PUBLIC)

ARCHER STREET (PUBLIC)

WENDELL STREET (PUBLIC)

1855 CITY LAYOUT

1886 CITY LAYOUT

RR VAL MAP SEC. 7.4-2

CONTINUED ON SHEET NO. 68

CONTINUED ON SHEET NO. 66

RET UPL 8019

RET UPL 8018

RET UPL 8017

PROP TEMP EASEMENT

PROP EHH (TYP)

PROP LP (TYP)

APPROX LOG (TYP)

PROP 2" PVC CONDUIT (TYP)

PROP DRAINAGE SWALE

POINT OF TRANSITION TO SWALE FOLLOWING PATH SLOPE

PROP 102'-6" PERFORATED HDPE

R&R BOLLARD IN PLACE (BO)

PROP PERM EASEMENT

10' STEAMLINE EASEMENT BK/PG 1581/11

10' STEAMLINE EASEMENT BK/PG 1581/11

CONST ℄

EXISTING RAILROAD

UPL 8019

UPL 8018

UPL 8017

1-1/4" HDPE FIBER-VZ(MCI)

5"STEEL FIBER-AT&T

1-1/4" HDPE FIBER-AT&T BOLLARD

CONC. PIERS

CONC.

CLF

CLF WITH BARBED WIRE

CLF 8'

DRIVEWAY EASEMENT BK/PG 1740/244

N/F AA REAL ESTATE GROUP LLC BK/PG 17290/6 139-143 MAY ST 211-4

N/F JUANA E. VASQUEZ BK/PG 11983/179 135-137 MAY ST 211-5

N/F VICTOR HERNANDEZ BK/PG 9665/119 131-133 MAY ST 211-6

N/F OLGA CRUZ BK/PG 17319/10 127 MAY ST 211-7

N/F GILCITA MARTINEZ BK/PG 11269/46 125 MAY ST 211-8

N/F GILBERTO MOSQUEA & ARSENIA TORRES MANON BK/PG 15178/187 123 MAY ST 211-9

N/F 111 MAY STREET TRUST BK/PG 4482/130 119 MAY ST 211-10

N/F LORENZO RODRIQUEZ BK/PG 5918/26 109 MAY ST 211-13

N/F SOLANGE ACEVEDO BK/PG 7575/167 103 MAY ST 211-14

N/F LUZ M. ANDUJAR & CRITIAN MANUEL GARCIA BK/PG 10051/321 97 ½ RAILROAD ST 190-3-2

N/F EIGHT BLAKELIN, LLC BK/PG 11407/199 8 BLAKELIN ST 211-17

N/F ARCHER AUTO CO., INC. BK/PG 4482/160 25-27 ARCHER ST PL 15983 190-38

N/F ARCHER AUTO CO., INC. BK/PG 1728/288 30-34 ARCHER ST PL 15983 190-37

N/F MASSACHUSETTS BAY TRANSPORTATION AUTHORITY BK/PG 1299/162 MERRIMACK STREET 212-24

N/F DISMANTLING, LLC BK/PG 15225/52 26 WENDELL STREET 190-26

519 518 517 516 515 514 69 68 67 66 65 64 65.50 65.00

NAD 83

N

FOR PERMITTING PURPOSES - NOT FOR CONSTRUCTION

608930_HD8A(UTILITY PLANS).DWG Plotted on 28-Oct-2022 4:28 PM

LAWRENCE
LMRC RAIL TRAIL

STATE	FED. AID PROJ. NO.	SHEET NO.	TOTAL SHEETS
MA	-	68	225
PROJECT FILE NO. 608930			

UTILITY PLANS - 12 OF 15

CONTINUED ON SHEET NO. 69

MANCHESTER STREET (PUBLIC - 50.0' WIDE)

RET UPL 2688 & GUY
PROP JUNCTION BOX (TYP)
PROP LIGHTING LOAD CENTER NO. 3
RET ULT & GUY
RET UPL 8021
RET UPL 820-3
RET UPL & GUY
ABAN OMH
RET BOLLARD
ADJ HH (BO-VZ)
ADJ HH (BO-AT&T)
RET UPL 8020 & GUY
PROP 72'-6" PERFORATED HDPE
PROP 2" PVC CONDUIT (TYP)
PROP EHH (TYP)
PROP LP (TYP)
APPROX LOG (TYP)
RET UPL 8019
PROP TEMP EASEMENT

MAY STREET (PUBLIC)
BLAKELIN STREET (PUBLIC)

10' STEAMLINE EASEMENT BK/PG 1581/11
CITY OF LAWRENCE BRIDGE EASEMENT (SEE VAL MAP)
10' ACCESS EASEMENT BK/PG 1229/778
ACCESS EASEMENT BK/PG 11798/140
30' PRIVATE WAY

EXISTING INVERT TABLE

CB16 RIM=60.12'	SMH5 RIM=62.42' INV.(a)=55.27 INV.(b)=55.01 INV.(c)=57.86	SMH6 RIM=62.26' INV.(a)=57.86 INV.(b)=56.66	SMH7 RIM=63.01 INV.(a)=57.21 INV.(b)=57.21 INV.(c)=59.41 INV.(d)=56.51
CBC17 RIM=60.54' TOP DEBRIS=58.24	SMH3 RIM=60.59' INV.(a)=52.39 INV.(b)=53.31 INV.(c)=52.65	SMH4 RIM=60.96' INV.(a)=54.33 INV.(b)=54.43 INV.(c)=54.86	

SCALE: 1" = 20'

CONTINUED ON SHEET NO. 67

FOR PERMITTING PURPOSES - NOT FOR CONSTRUCTION

608930_HD8A(UTILITY PLANS).DWG Plotted on 28-Oct-2022 4:28 PM

LAWRENCE
LMRC RAIL TRAIL

STATE	FED. AID PROJ. NO.	SHEET NO.	TOTAL SHEETS
MA	-	69	225
	PROJECT FILE NO. 608930		

UTILITY PLANS - 13 OF 15

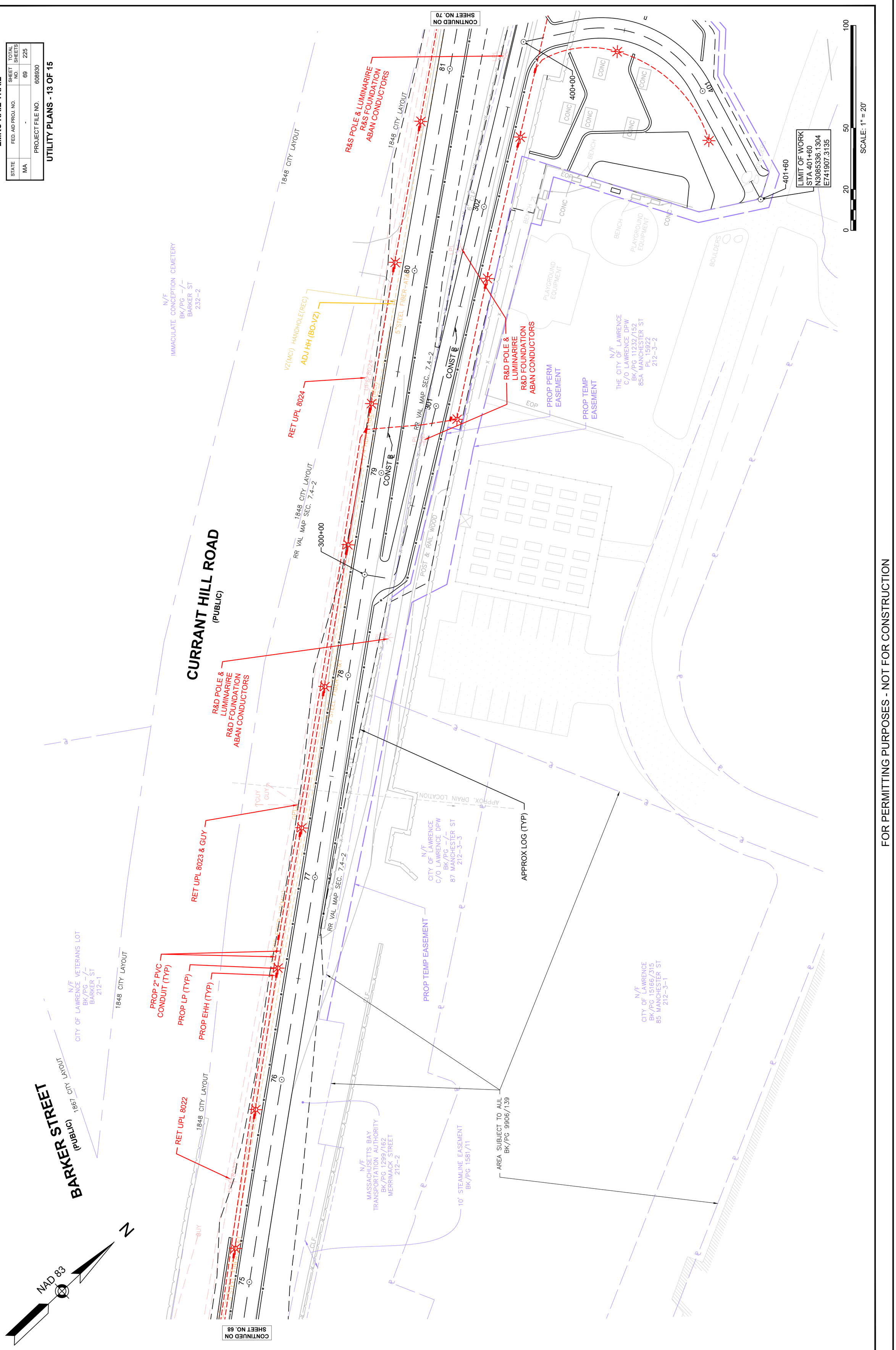

608930_HD8A(UTILITY PLANS).DWG Plotted on 28-Oct-2022 4:29 PM

LAWRENCE
LMRC RAIL TRAIL

STATE	FED. AID PROJ. NO.	SHEET NO.	TOTAL SHEETS
MA	-	70	225
PROJECT FILE NO. 608930			

UTILITY PLANS - 14 OF 15

CURRANT HILL ROAD
(PUBLIC)

1848 CITY LAYOUT
RR VAL MAP SEC. 7.4-2

CONTINUED ON SHEET NO. 71

RET UPL 8027 & GUY
PROP 2" PVC CONDUIT (TYP)
PROP LP (TYP)
PROP EHH (TYP)
RET UPL 8026
APPROX LOG (TYP)
R&D POLE & LUMINARIRE
R&D FOUNDATION
ABAN CONDUCTORS
ADJ OMH
PROP PERM EASEMENT
PROP TEMP EASEMENT
RET UPL 8025
CONST ℄
N/F
MASSACHUSETTS BAY TRANSPORTATION AUTHORITY
BK/PG 1299/162
MERRIMACK STREET
212-2
N/F
THE CITY OF LAWRENCE
C/O LAWRENCE DPW
BK/PG 11232/152
85A MANCHESTER ST
PL 15922
212-3-2
LIMIT OF RESOURCE AREA AS FLAGGED BY NOVER ARMSTRONG ON MARCH 10, 2017. (TYP.)
LIMIT OF WORK
STA 401+60
N3085336.1304
E741907.3135
401+60
400+00
CONTINUED ON SHEET NO. 69
NAD 83
N
SCALE: 1" = 20'
0 20 50 100

FOR PERMITTING PURPOSES - NOT FOR CONSTRUCTION

LAWRENCE
LMRC RAIL TRAIL

STATE	FED. AID PROJ. NO.	SHEET NO.	TOTAL SHEETS
MA	-	71	225
PROJECT FILE NO.	608930		

UTILITY PLANS - 15 OF 15

608930_HDBA(UTILITY PLANS).DWG Plotted on 28-Oct-2022 4:29 PM

Proposal No. 608930-128034

A00869 - 90

CURRANT HILL ROAD
(PUBLIC)

NAD 83

N

1848 CITY LAYOUT

1848 CITY LAYOUT
RR VAL MAP SEC. 7.4-2

CONTINUED ON SHEET NO. 70

APPROX LOG (TYP)

RET EHH

PROP 2" PVC CONDUIT (TYP)

PROP EHH (TYP)

PROP LP (TYP)

1-1/4"HDPE FIBER-VZ(MCI)

4 SMFO FIBER-AT&T

EHH

86

87

88

CONST ℄

PROJECT END
STA 88+45
N3085865.1576
E741310.1108

89+00

RET HH

AT&T HANDHOLE(REC)

RET HH

VZ(MCI) HANDHOLE(REC)

UPL 8028

RET UPL 8028

RET UPL & GUY

R&D POLE & LUMINARIRE
R&D FOUNDATION
ABAN CONDUCTORS

N/F
MASSACHUSETTS BAY
TRANSPORTATION AUTHORITY
BK/PG 1299/162
MERRIMACK STREET
212-2

25-FT RFA

GUY

#B7.86

#B7.87

#B7.88

BANK

#B7.89

#B7.91

#B7.92

#B7.93

#B7.94

#B7.95

#B7.96

WF#B7.97

#B7.98

#B7.99

310+00

LIMIT OF RESOURCE AREA
AS FLAGGED BY NOVER ARMSTRONG
ON MARCH 10, 2017. (TYP.)

~CITY OF LAWRENCE~
~CITY OF METHUEN~

N/F
THE CITY OF LAWRENCE
C/O LAWRENCE DPW
BK/PG 11232/152
85A MANCHESTER ST
PL 15922
212-3-2

RR VAL MAP SEC. 7.4-2

PROP PERM EASEMENT

PROP TEMP EASEMENT

EPC

R&D POLE & LUMINARIRE
R&D FOUNDATION
ABAN CONDUCTORS

305

309

#B7.107

#B7.106

BANK

#B7.105

#B7.104

#MAHW 7.101

#B7.103

#B7.102

#B7.101

LIMIT OF WORK
STA 309+42
N3085910.0398
E741529.3536

0 20 50 100

SCALE: 1" = 20'

FOR PERMITTING PURPOSES - NOT FOR CONSTRUCTION

608930_HD5(CONSTRUCTION PLANS)_LIGHTING_4.DWG Plotted on 28-Oct-2022 1:11 PM

LAWRENCE
LMRC RAIL TRAIL

STATE	FED. AID PROJ. NO.	SHEET NO.	TOTAL SHEETS
MA	-	72	225
PROJECT FILE NO. 608930			

LIGHTING PLANS - 1 OF 15

SCALE: 1" = 20'

FOR PERMITTING PURPOSES - NOT FOR CONSTRUCTION

CONTINUED ON SHEET NO. 73

MERRIMACK STREET (ROUTE 114)
(PUBLIC 60.0' WIDE)

SOUTH CANAL

2"C FROM LCC-1
4#2(CKTS LP-5 & LP-6)
1#6 GND

2"C, 2#10, 1#10 GND
FROM HANDHOLE
TO LIGHT POLE (TYP)

PROPOSED LIGHTING
CONTROL CABINET LCC-1

PROPOSED
OVERHEAD
SECONDARY
SERVICE

SERVICE CONNECTION TO
PROPOSED RISER
POLE

RUN CONDUIT
ALONG BRIDGE

PROJECT BEGIN
STA 1+16
N3080281.0913
E746586.2552

EXISTING
UTILITY POLE
101
NET & T
4 MECO

EXISTING
UTILITY POLE
102
NET & T
27
5

PC +03.93
PRC +22.60
PT +41.07

N/F
18-20 BROADWAY, LLC
BK/PG 14201/101
2 SOUTH BROADWAY
PL 5660
122-4

N/F
CHRISTOS ROGARIS, TRUSTEE OF
J.P. REALTY TRUST
BK/PG 2484/97
8 SOUTH BROADWAY
PL 5660
122-5

N/F
ESSEX COMPANY
BK/PG -/-
SOUTH BROADWAY/
MERRIMACK STREET
122-6

N/F
GREATER LAWRENCE
SANITARY DISTRICT
PARKER STREET
BK/PG 1215/721
103-3

N/F
CITY OF LAWRENCE
BK/PG 15538/125
7 SOUTH CANAL ST
123-1

N/F
MASSACHUSETTS BAY
TRANSPORTATION AUTHORITY
BK/PG 1299/162
122-119

N/F
NUNEZ, LLC
BK/PG 11297/139
5 - 7 MERRIMACK ST
PL 15990
122-26

N/F
MASSACHUSETTS BAY
TRANSPORTATION AUTHORITY
BK/PG 1299/162
SALEM STREET
121-48

N/F
MERRIMACK STREET, LLC
BK/PG 12934/193
11 MERRIMACK ST
PL 13208
122-23

ENCAMPMENT (TYP)

LIGHTING PHOTOMETRIC

Statistics

Description	Symbol	Avg	Max	Min	Max/Min	Avg/Min
BEGINNING OF PATH + BRIDGE	+	1.8 fc	7.1 fc	0.5 fc	14.2:1	3.6:1

608930_HD5(CONSTRUCTION PLANS)_LIGHTING_4.DWG Plotted on 28-Oct-2022 1:11 PM

LAWRENCE
LMRC RAIL TRAIL

STATE	FED. AID PROJ. NO.	SHEET NO.	TOTAL SHEETS
MA	-	73	225
	PROJECT FILE NO. 608930		

LIGHTING PLANS - 2 OF 15

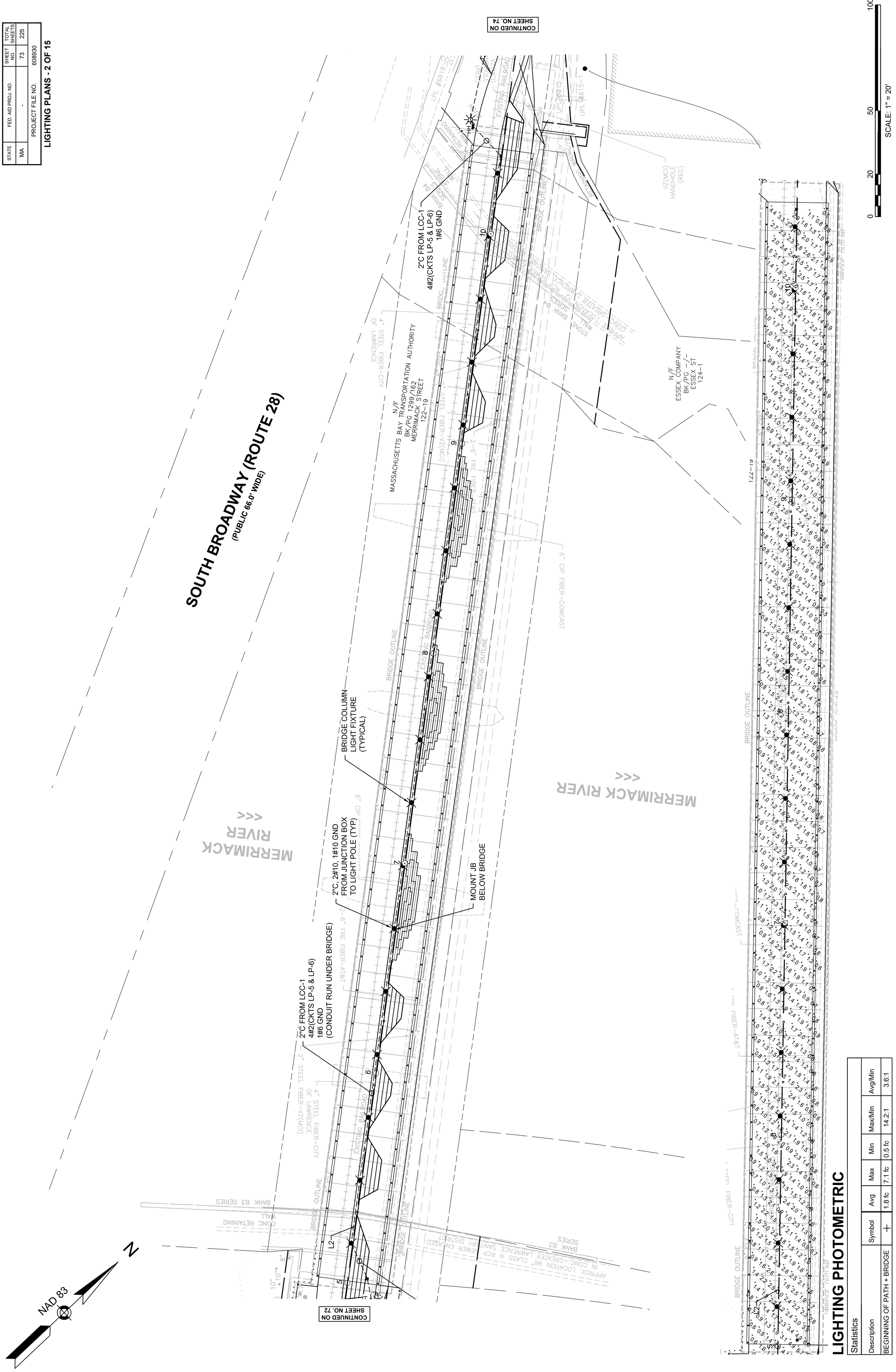

LIGHTING PHOTOMETRIC

Statistics						
Description	Symbol	Avg	Max	Min	Max/Min	Avg/Min
BEGINNING OF PATH + BRIDGE	+	1.8 fc	7.1 fc	0.5 fc	14.2:1	3.6:1

FOR PERMITTING PURPOSES - NOT FOR CONSTRUCTION

608930_HD5(CONSTRUCTION PLANS)_LIGHTING_4.DWG Plotted on 28-Oct-2022 1:11 PM

LAWRENCE
LMRC RAIL TRAIL

STATE	FED. AID PROJ. NO.	SHEET NO.	TOTAL SHEETS
MA	-	74	225
PROJECT FILE NO. 608930			

LIGHTING PLANS - 3 OF 15

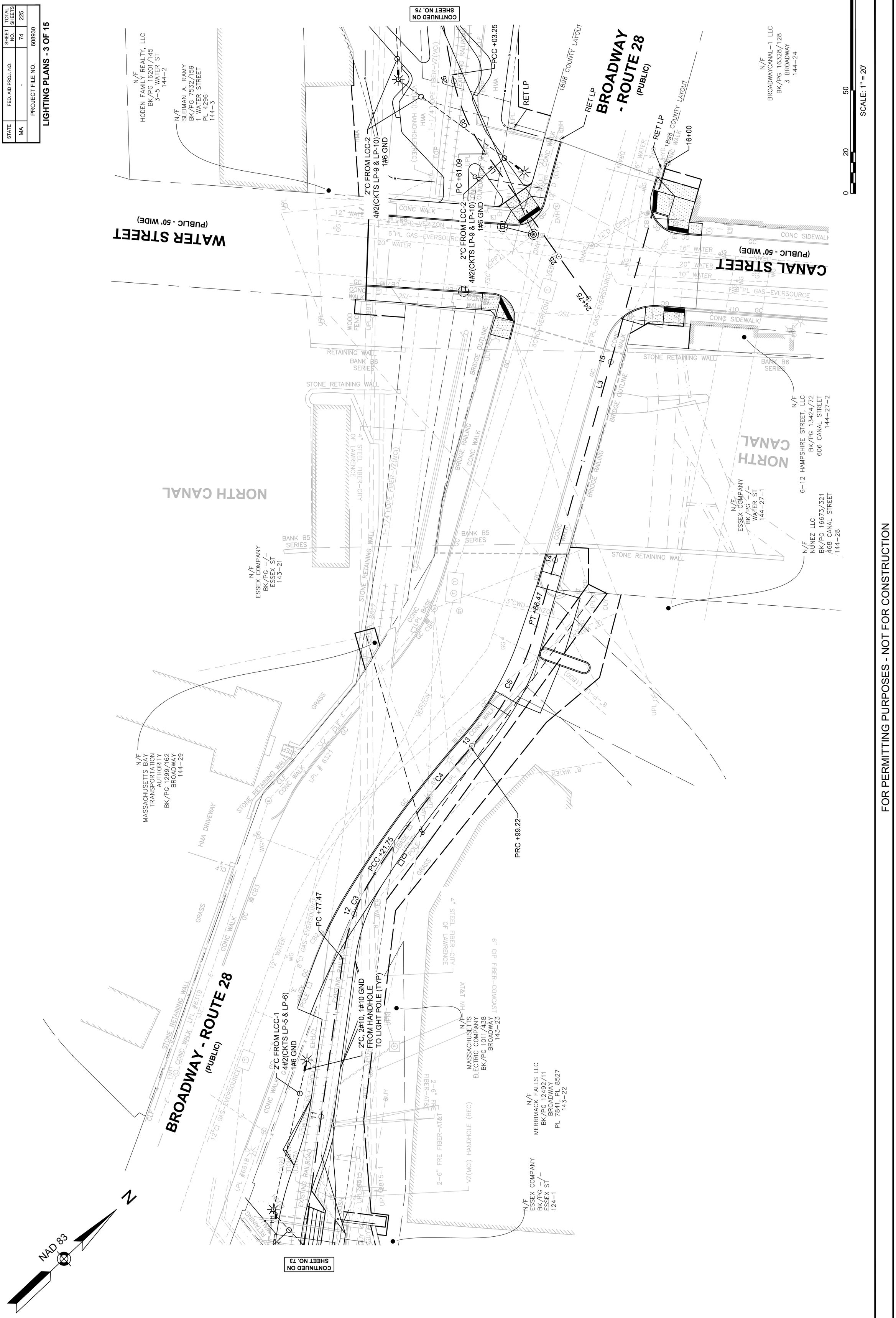

608930_HD5(CONSTRUCTION PLANS)_LIGHTING_4.DWG Plotted on 28-Oct-2022 2:34 PM

LAWRENCE
LMRC RAIL TRAIL

STATE	FED. AID PROJ. NO.	SHEET NO.	TOTAL SHEETS
MA	-	75	225
PROJECT FILE NO. 608930			

LIGHTING PLANS - 4 OF 15

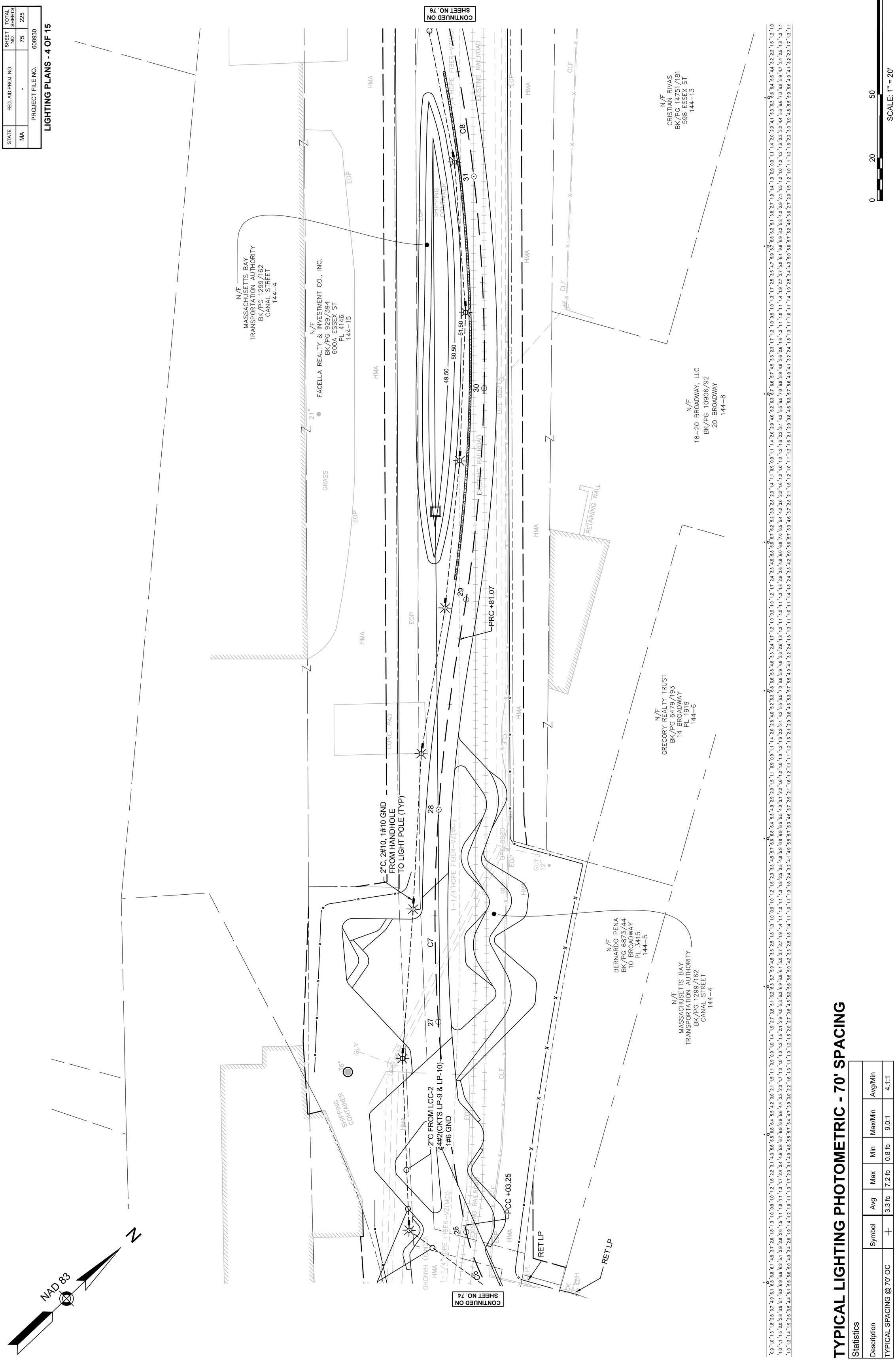

TYPICAL LIGHTING PHOTOMETRIC - 70' SPACING

Statistics

Description	Symbol	Avg	Max	Min	Max/Min	Avg/Min
TYPICAL SPACING @ 70' OC	+	3.3 fc	7.2 fc	0.8 fc	9.0:1	4.1:1

FOR PERMITTING PURPOSES - NOT FOR CONSTRUCTION

608930_HD5(CONSTRUCTION PLANS)_LIGHTING_4.DWG Plotted on 28-Oct-2022 1:11 PM

LAWRENCE
LMRC RAIL TRAIL

STATE	FED. AID PROJ. NO.	SHEET NO.	TOTAL SHEETS
MA	-	76	225
PROJECT FILE NO. 608930			

LIGHTING PLANS - 5 OF 15

DRAINAGE DETAILS
NONE

WATER SUPPLY ALTERATIONS
SEE BELOW

TRAFFIC SIGNAL CONDUIT
NONE

HIGHWAY GUARD DETAILS
NONE

NAD 83

SCALE: 1" = 20'

FOR PERMITTING PURPOSES - NOT FOR CONSTRUCTION

608930_HD5(CONSTRUCTION PLANS)_LIGHTING_4.DWG Plotted on 28-Oct-2022 1:11 PM

LAWRENCE
LMRC RAIL TRAIL

STATE	FED. AID PROJ. NO.	SHEET NO.	TOTAL SHEETS
MA	-	77	225
PROJECT FILE NO. 608930			

LIGHTING PLANS - 6 OF 15

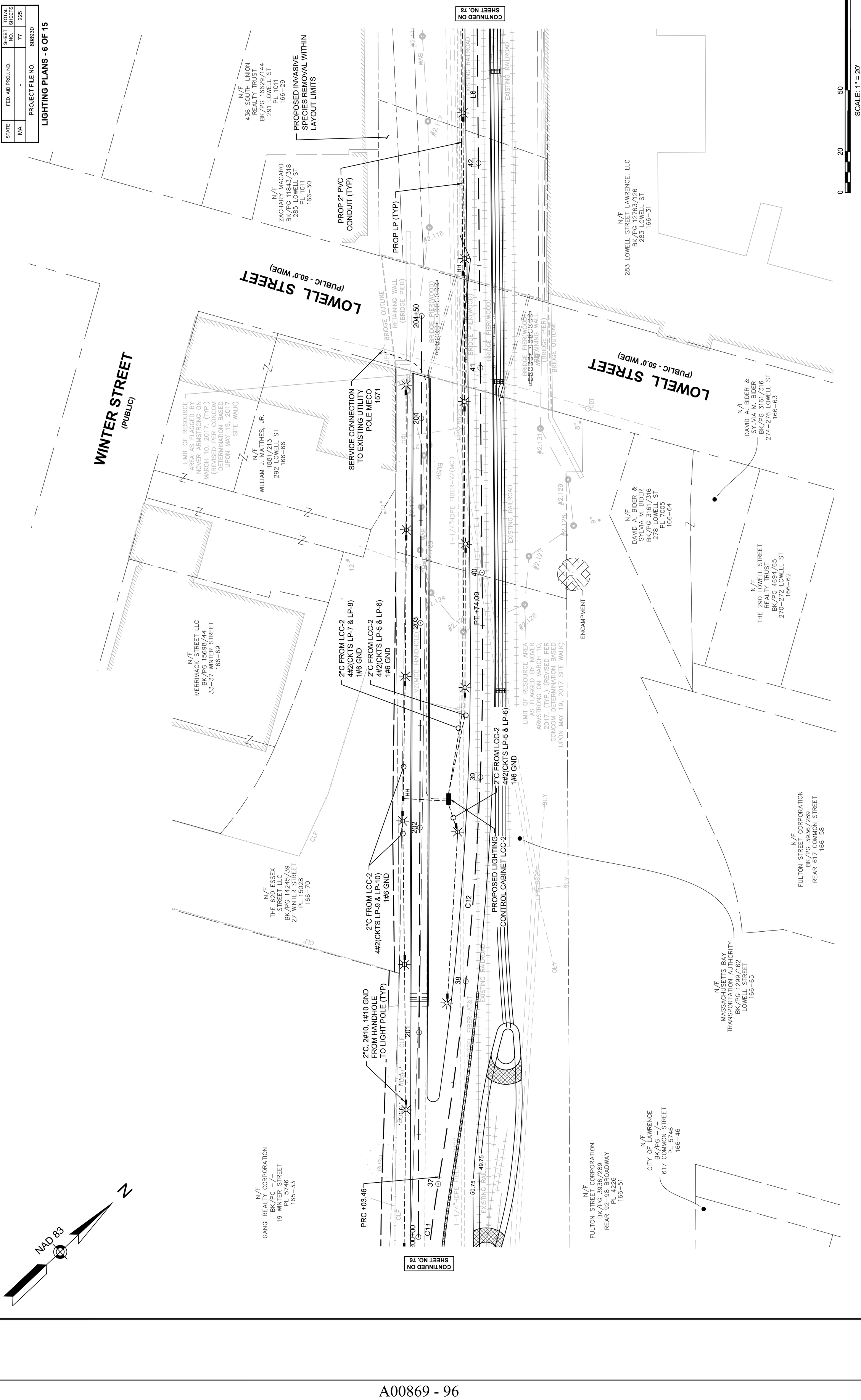

608930_HD5(CONSTRUCTION PLANS)_LIGHTING_4.DWG Plotted on 28-Oct-2022 1:11 PM

LAWRENCE
LMRC RAIL TRAIL

STATE	FED. AID PROJ. NO.	SHEET NO.	TOTAL SHEETS
MA	-	78	225
PROJECT FILE NO. 608930			

LIGHTING PLANS - 7 OF 15

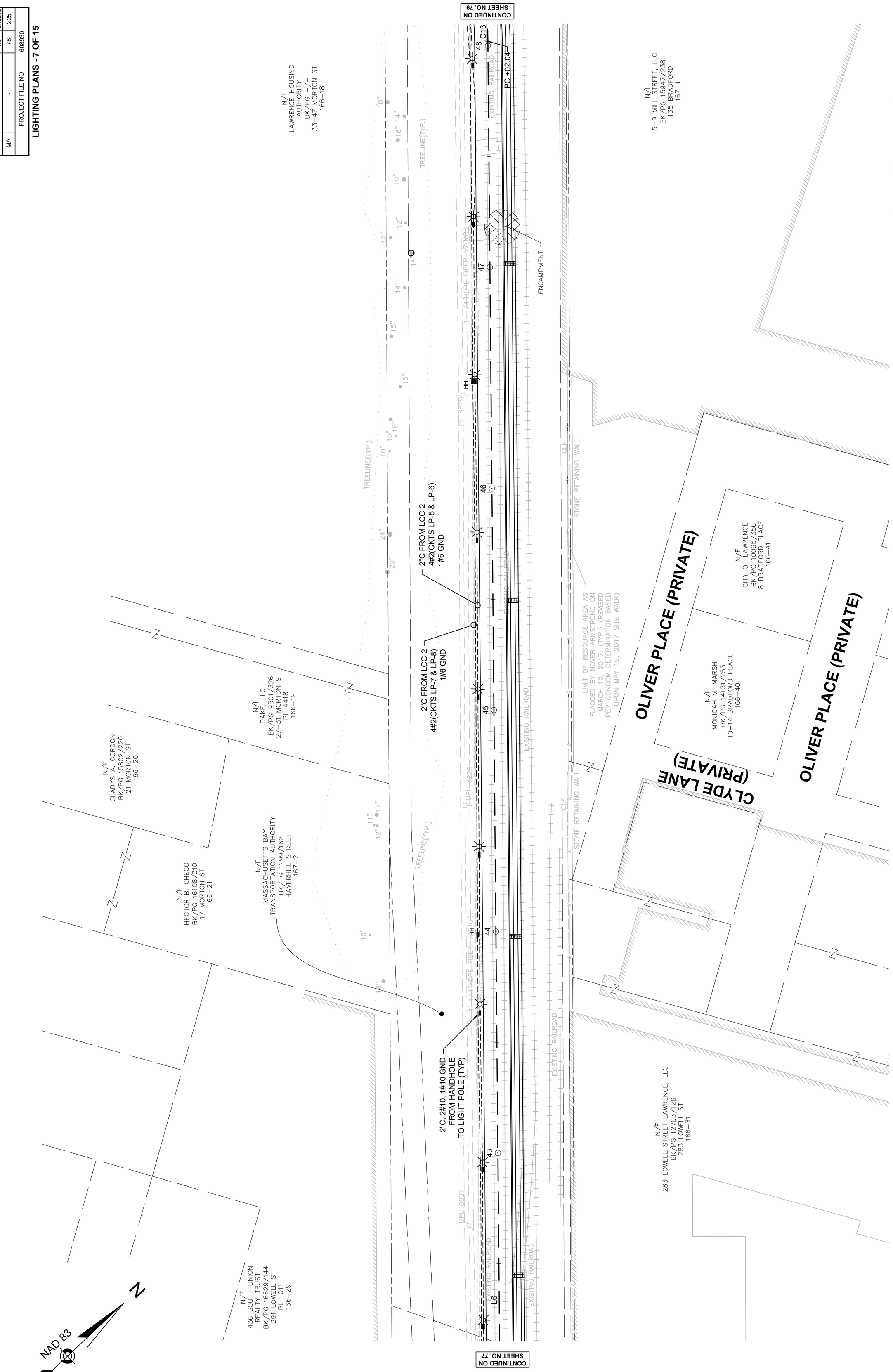

608930_HD5(CONSTRUCTION PLANS)_LIGHTING_4.DWG Plotted on 28-Oct-2022 1:11 PM

LAWRENCE
LMRC RAIL TRAIL

STATE	FED. AID PROJ. NO.	SHEET NO.	TOTAL SHEETS
MA	-	79	225
PROJECT FILE NO. 608930			

LIGHTING PLANS - 8 OF 15

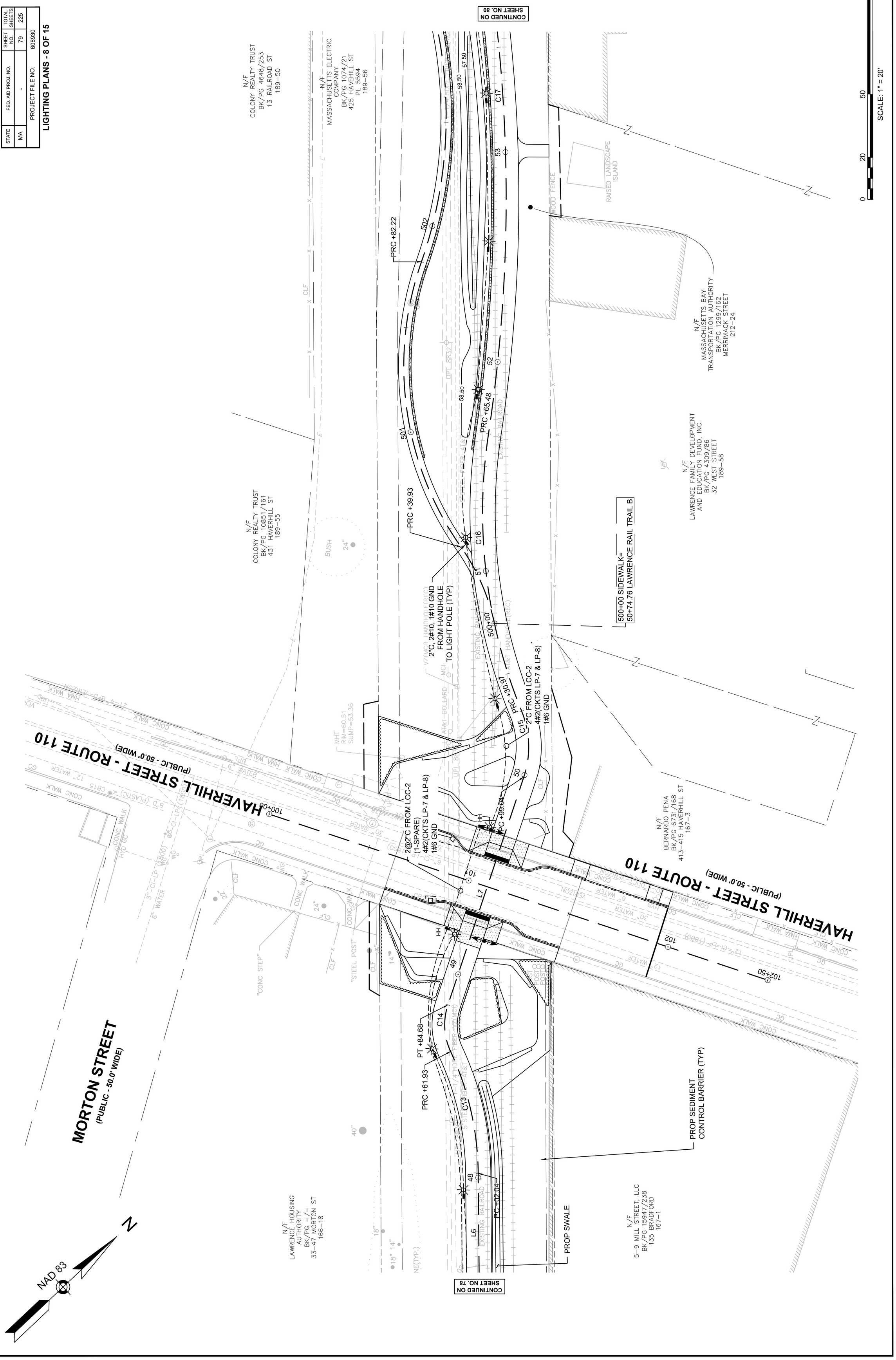

608930_HD5(CONSTRUCTION PLANS)_LIGHTING_4.DWG Plotted on 28-Oct-2022 1:12 PM

LAWRENCE
LMRC RAIL TRAIL

STATE	FED. AID PROJ. NO.	SHEET NO.	TOTAL SHEETS
MA	-	80	225
PROJECT FILE NO. 608930			

LIGHTING PLANS - 9 OF 15

RAILROAD STREET
(PUBLIC)

CONTINUED ON SHEET NO. 81

CONTINUED ON SHEET NO. 79

SCALE: 1" = 20'

57+98.32 LAWRENCE RAIL TRAIL B=
507+42.61 SIDEWALK

504+88.19 SIDEWALK=
55+49.36 LAWRENCE RAIL TRAIL B

PRC +42.99
PRC +92.55
PRC +85.70
PRC +18.85
PRC +20.66

2"C, 2#10, 1#10 GND
FROM HANDHOLE
TO LIGHT POLE (TYP)

2"C FROM LCC-2
4#2(CKTS LP-7 & LP-8)
1#6 GND

EXISTING INVERT TABLE
SMH2
RIM=61.18'

FOR PERMITTING PURPOSES - NOT FOR CONSTRUCTION

608930_HD5(CONSTRUCTION PLANS)_LIGHTING_4.DWG Plotted on 28-Oct-2022 1:12 PM

LAWRENCE
LMRC RAIL TRAIL

STATE	FED. AID PROJ. NO.	SHEET NO.	TOTAL SHEETS
MA	-	81	225
PROJECT FILE NO. 608930			

LIGHTING PLANS - 10 OF 15

RAILROAD STREET
(PUBLIC)

BOURGOIN SQUARE PARK

HUBBARD PLACE
(PUBLIC)

LEGEND
△# = PEDESTRIAN CURB RAMP NUMBER
(#) = DRIVEWAY NUMBER

SCALE: 1" = 20'

FOR PERMITTING PURPOSES - NOT FOR CONSTRUCTION

CONTINUED ON SHEET NO. 82

CONTINUED ON SHEET NO. 80

608930_HD5(CONSTRUCTION PLANS)_LIGHTING_4.DWG Plotted on 28-Oct-2022 1:12 PM

LAWRENCE
LMRC RAIL TRAIL

STATE	FED. AID PROJ. NO.	SHEET NO.	TOTAL SHEETS
MA	-	82	225
PROJECT FILE NO. 608930			

LIGHTING PLANS - 11 OF 15

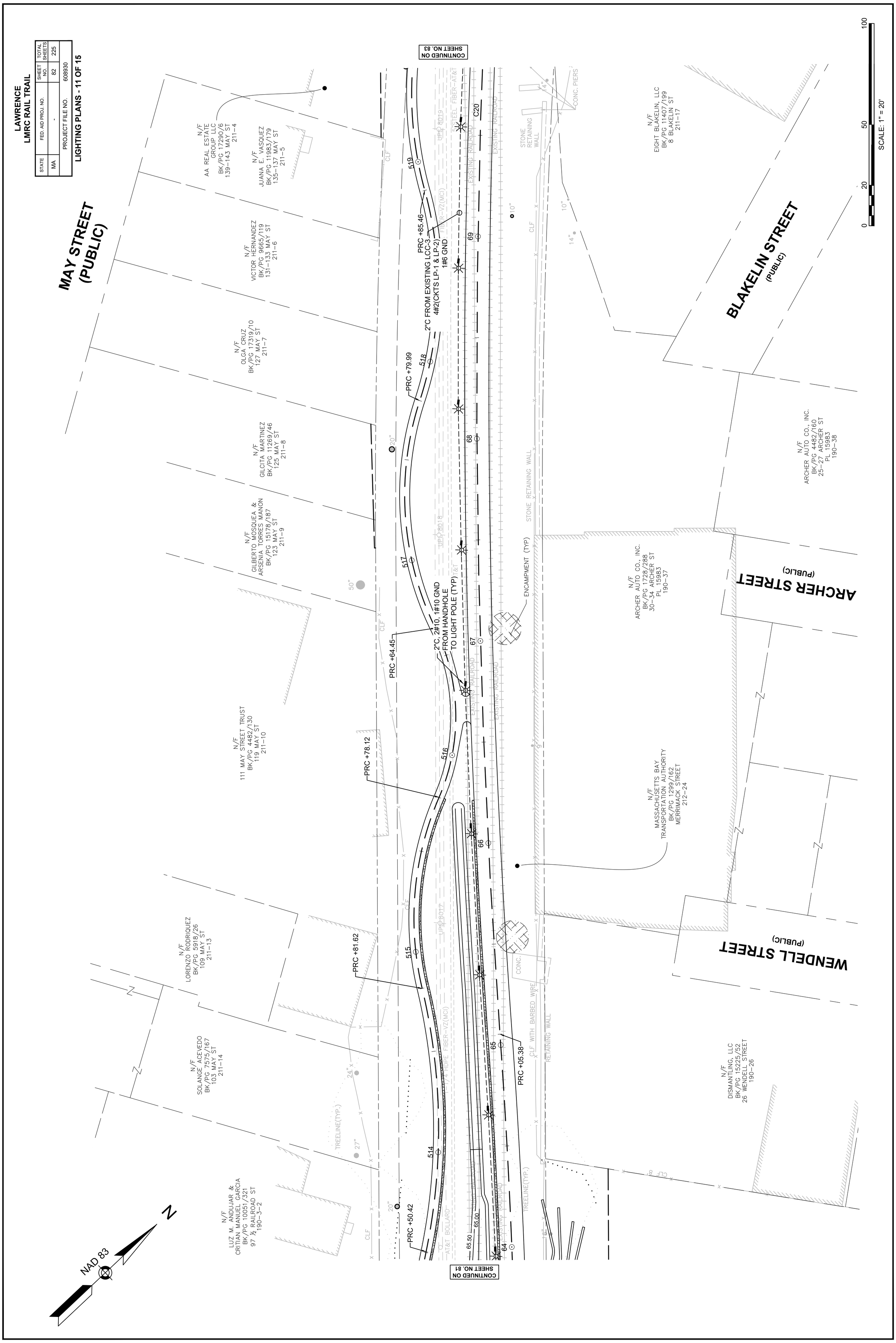

FOR PERMITTING PURPOSES - NOT FOR CONSTRUCTION

608930_HD5(CONSTRUCTION PLANS)_LIGHTING_4.DWG Plotted on 28-Oct-2022 1:12 PM

LAWRENCE
LMRC RAIL TRAIL

STATE	FED. AID PROJ. NO.	SHEET NO.	TOTAL SHEETS
MA	-	83	225
PROJECT FILE NO. 608930			

LIGHTING PLANS - 12 OF 15

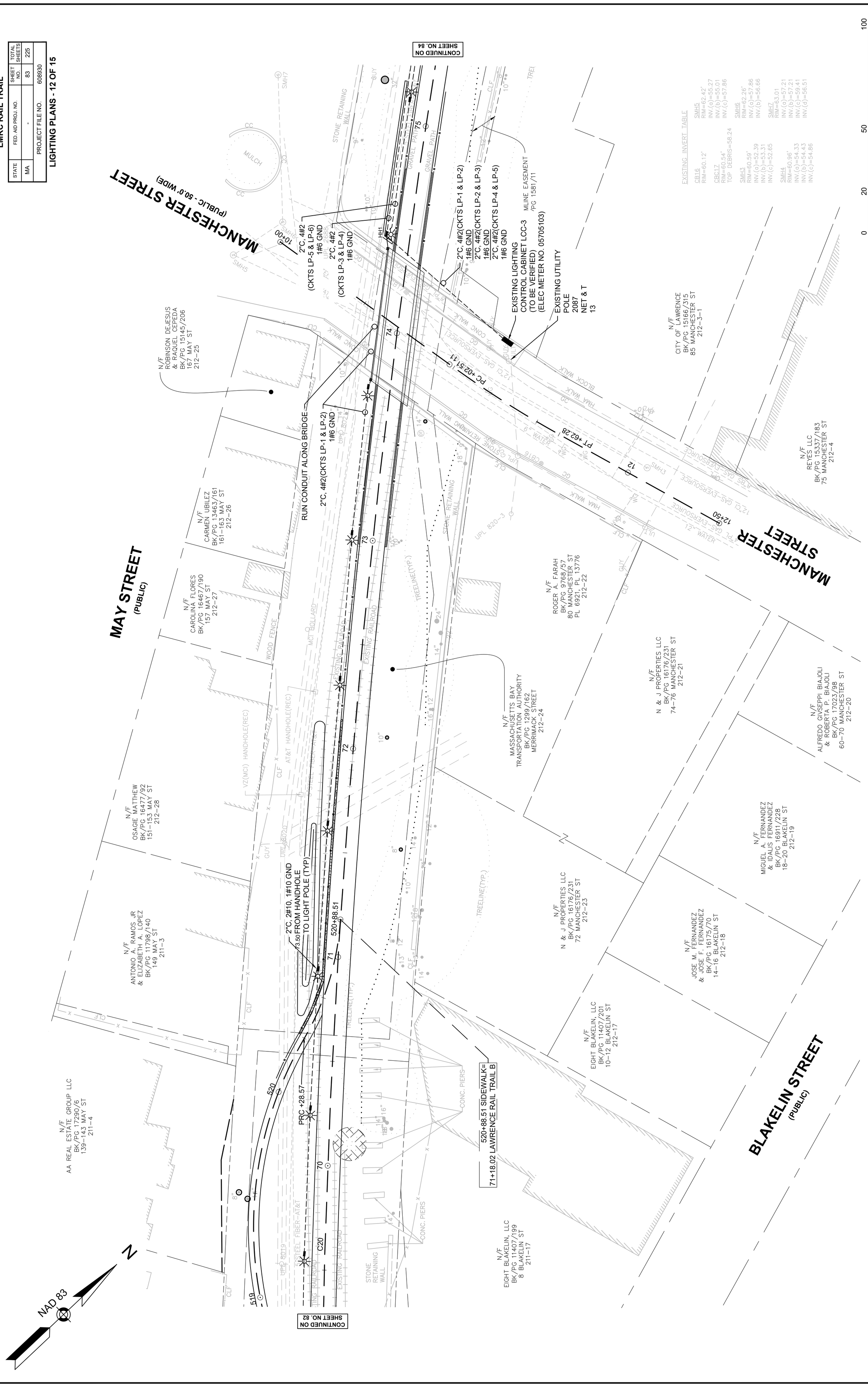

FOR PERMITTING PURPOSES - NOT FOR CONSTRUCTION

608930_HD5(CONSTRUCTION PLANS)_LIGHTING_4.DWG Plotted on 28-Oct-2022 1:12 PM

LAWRENCE
LMRC RAIL TRAIL

STATE	FED. AID PROJ. NO.	SHEET NO.	TOTAL SHEETS
MA	-	84	225
PROJECT FILE NO. 608930			

LIGHTING PLANS - 13 OF 15

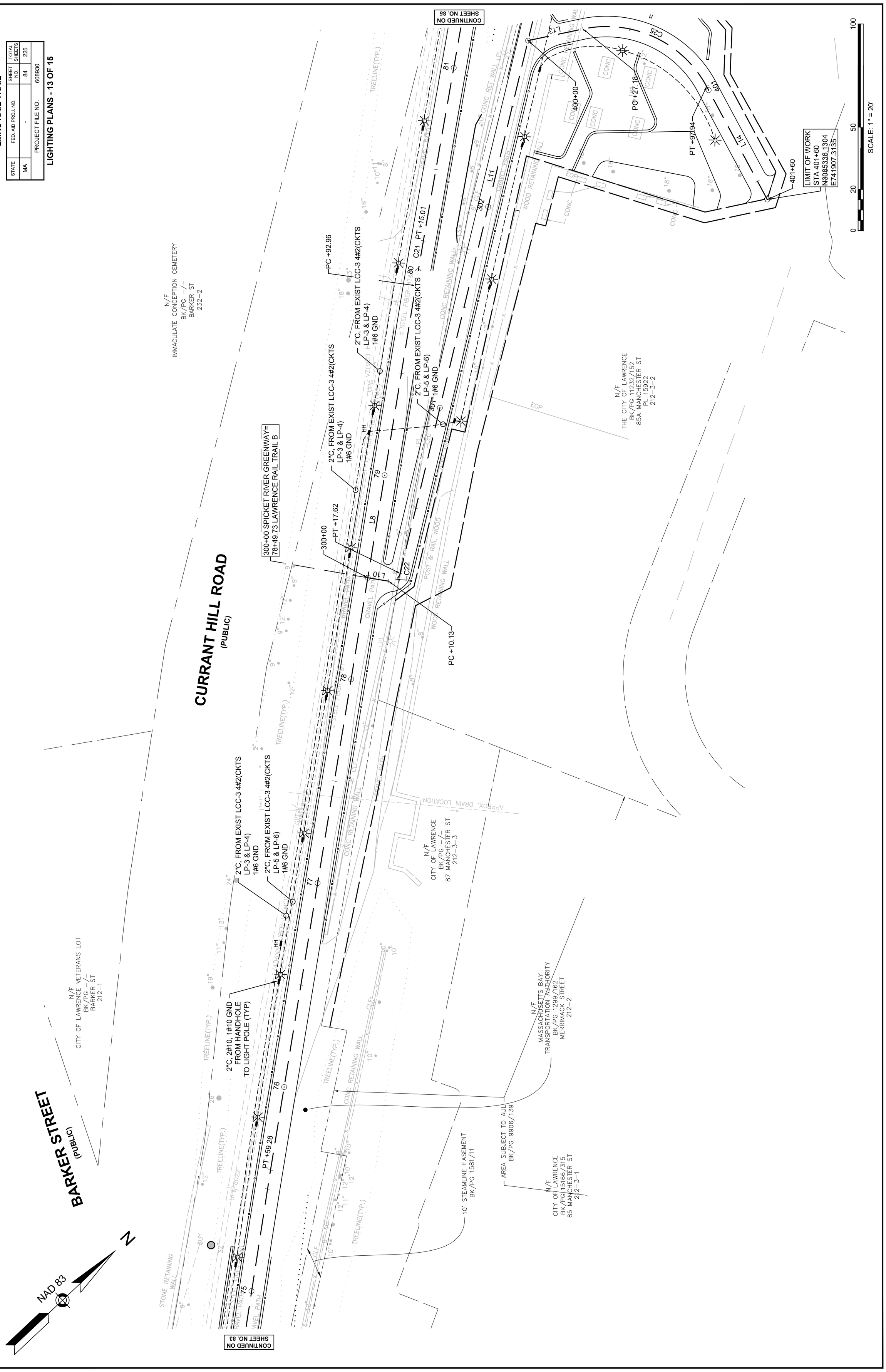

FOR PERMITTING PURPOSES - NOT FOR CONSTRUCTION

608930_HD5(CONSTRUCTION PLANS)_LIGHTING_4.DWG Plotted on 28-Oct-2022 1:12 PM

LAWRENCE
LMRC RAIL TRAIL

STATE	FED. AID PROJ. NO.	SHEET NO.	TOTAL SHEETS
MA	-	85	225
PROJECT FILE NO. 608930			

LIGHTING PLANS - 14 OF 15

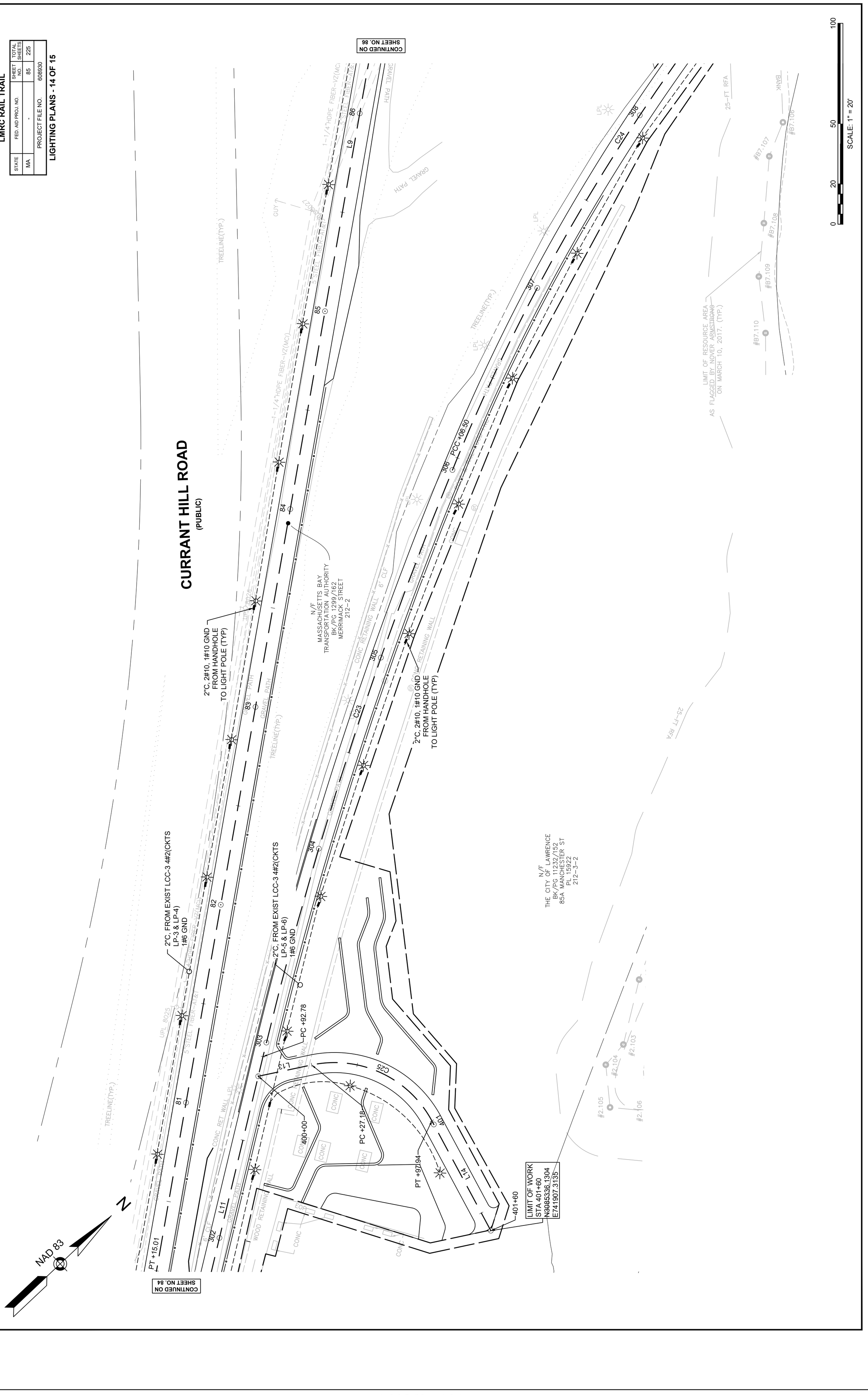

FOR PERMITTING PURPOSES - NOT FOR CONSTRUCTION

LAWRENCE
LMRC RAIL TRAIL

STATE	FED. AID PROJ. NO.	SHEET NO.	TOTAL SHEETS
MA	-	86	225
PROJECT FILE NO.	608930		

LIGHTING PLANS - 15 OF 15

608930_HD5(CONSTRUCTION PLANS)_LIGHTING_4.DWG Plotted on 28-Oct-2022 1:12 PM

Proposal No. 608930-128034

A00869 - 105

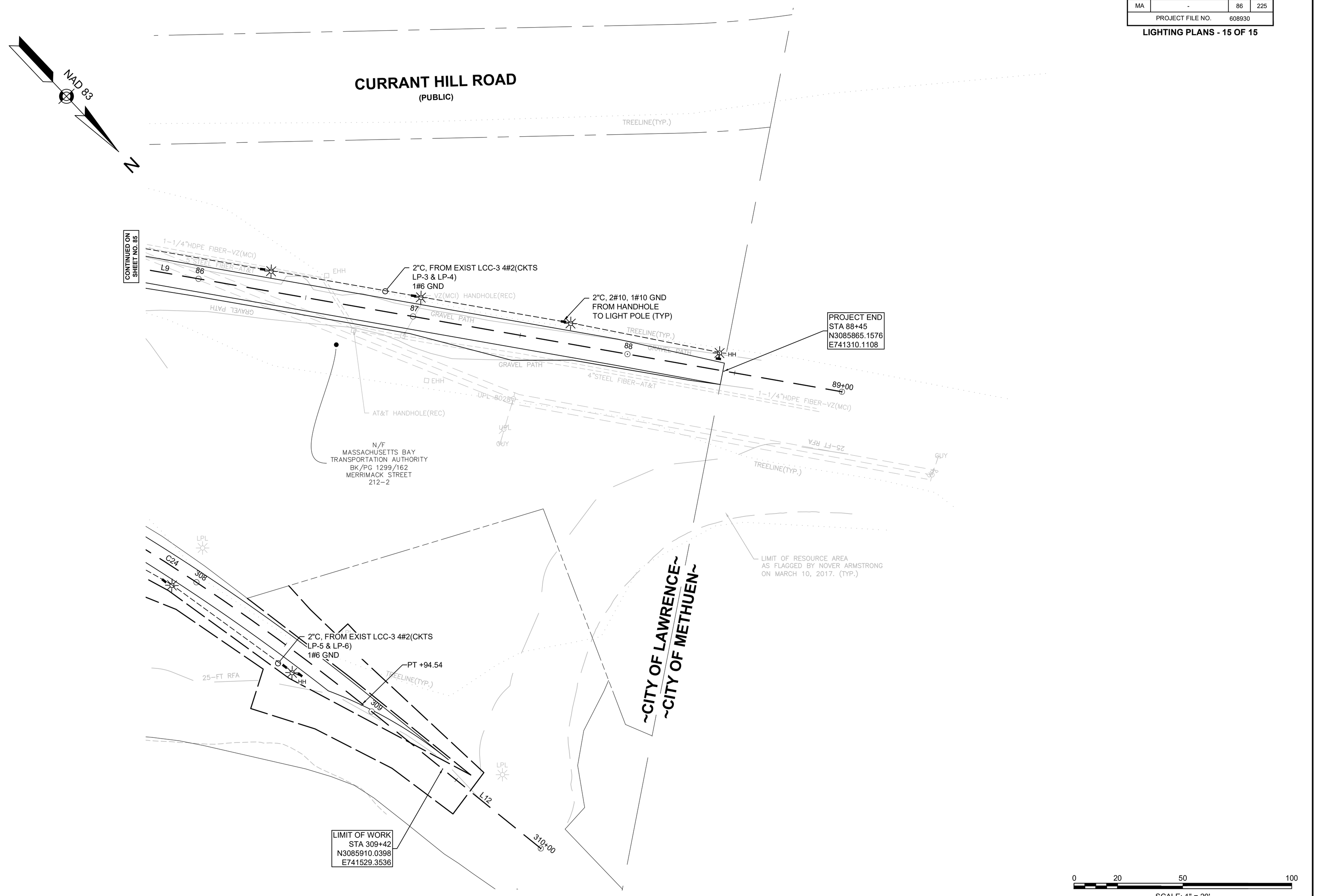

FOR PERMITTING PURPOSES - NOT FOR CONSTRUCTION

ELECTRICAL LEGEND

PATH LIGHT POLE MOUNTED FIXTURE

BRIDGE LIGHT COLUMN FIXTURE

RELOCATED EXISTING FIXTURE

HH
12" X 12" HANDHOLE

HH1
12" X 24" HANDHOLE

CONTROL CABINET

JUNCTION BOX

CONDUIT ROADWAY CROSSING

GENERAL NOTES

1. DRAWINGS ARE DIAGRAMMATIC AND INDICATE THE GENERAL ARRANGEMENT OF WORK. BASIC DESIGN CONCEPTS INDICATED ARE TO BE EITHER FOLLOWED OR BETTERED. WORK IS INTENDED TO INCLUDE ALL ITEMS NECESSARY FOR PROPER OPERATION AND COMPLETION. FIELD VERIFY ALL LOCATIONS, ELEVATIONS, AND DIMENSIONS.
2. EXECUTE ALL WORK IN A NEAT WORKINGMAN MANNER IN CONFORMANCE WITH THE BEST MODERN TRADE PRACTICES, BY COMPETENT, EXPERIENCED MECHANICS, PRESENTING A NEAT APPEARANCE WHEN COMPLETED. REPLACE WORK NOT APPROVED BY OWNER WITHOUT ADDITIONAL CHARGE.
3. AS THERE MAY BE VARIOUS CONDITIONS AT THE SITE WHICH DO NOT SHOW ON THE ACCOMPANYING DRAWINGS, OR WHICH ARE AT THE VARIANCE WITH THE CONDITIONS INDICATED ON THE DRAWINGS, IT IS IMPORTANT THAT EACH BIDDER VISIT THE SITE AND ACQUAINT HIMSELF WITH EXISTING CONDITIONS AND TAKE THESE CONDITIONS INTO CONSIDERATION WHEN PREPARING HIS BID. EACH BIDDER SHALL OBTAIN INFORMATION OR MAKE ANY MEASUREMENT DESIRED. LACK OF KNOWLEDGE RELATIVE TO THE EXISTING SITE CONDITIONS WILL NOT BE ALLOWED S A BASIS OF EXTRA COMPENSATIONS.

LUMINAIRE SCHEDULE

LUMNAIRE	QUANTITY	MANUFACTURER	CATALOG NUMBER	DESCRIPTION	LUMENS PER LAMP	WATTAGE	DISTRIBUTION TYPE	POLE
☼		STERNBERG	1A SL730 24L 30 MDL018 SV1	POLE MOUNTED LED FIXTURE	7011	88.5	III	VALMONT 18' STEEL W/25' BEND RADIUS
✦		HESS	MSC300M-F WW/HP DW UNV 16AS GG	LED LIGHT COLUMN	-	37	-	

CONSTRUCTION NOTES

1. WHERE CONDUIT IS TO BE INSTALLED UNDER EXISTING PAVED WALKWAY, PAVEMENT SHALL BE CUT AND PATCHED.
2. LOCATION OF PROPOSED ELECTRICAL SERVICES ARE INTENDED TO NOT DISTURB ROOT SYSTEM OF EXISTING TREES OR SHRUBS. CONTRACTOR SHALL EXERCISE DUE CARE TO PREVENT DAMAGE THERETO. ALL GRASS AREAS DISTURBED SHALL BE RESTORED TO ROUGH GRADE, TOPSOIL AND GRASS SEEDING SHALL BE DONE BY OTHERS. CONTRACTOR IS RESPONSIBLE FOR THE REMOVAL, CARE AND REPLANTING OF ALL PLANTINGS AND SHRUBS DISTURBED DURING CONSTRUCTION.
3. ALL EXISTING OVERHEAD UTILITIES ARE SHOWN USING THE BEST AVAILABLE RECORD PLAN INFORMATION. EXPLORATORY EXCAVATION BY CONTRACTOR SHALL BE PERFORMED AT ALL POTENTIAL UTILITY CONFLICTS TO LOCATE EXISTING UTILITIES, PRIOR TO INSTALLATION OF UNDERGROUND CONDUITS, DUCTBANKS AND BASES. CONTRACTOR IS RESPONSIBLE FOR PROTECTION OF ALL UTILITIES WHETHER OR NOT THEY ARE SHOWN ON THE PLANS. ALL REPAIRS TO DAMAGED UTILITIES SHALL BE MADE BY THE THE CONTRACTOR USING MATERIALS APPROVED BY THE ENGINEER AT NO ADDITIONAL COST TO THE OWNER.
4. CONTRACTOR TO CONTACT DIG SAFE, PRIOR TO COMMENCING WORK. CONTRACTOR SHALL VERIFY LOCATION OF ALL OVERHEAD AND UNDERGROUND ELECTRIC AND TELEPHONE LINES AND TAKE NECESSARY PRECAUTIONS IN STRICT ACCORDANCE WITH OSHA STANDARDS DURING CONSTRUCTION. CONTRACTOR SHALL CONTACT LOCAL ELECTRICAL, CABLE AND TELEPHONE UTILITIES REGARDING ANY NECESSARY SUPPORT OF ANY UTILITY POLES DURING CONSTRUCTION. CONTRACTOR IS RESPONSIBLE FOR THE SUPPORT OF TEMPORARY RELOCATION OF ALL UTILITY POLES AFFECTED BY THE CONSTRUCTION.

LAWRENCE
LMRC RAIL TRAIL

STATE	FED. AID PROJ. NO.	SHEET NO.	TOTAL SHEETS
MA	-	87	225
PROJECT FILE NO.	608930		

LIGHTING DETAILS - 1 OF 4

608930_HDS\CONSTRUCTION PLANS_LIGHTING_DETAILS_2.DWG Plotted on 28-Oct-2022 1:12 PM

Proposal No. 608930-128034

A00869 - 106

608930_HDS\CONSTRUCTION PLANS_LIGHTING_DETAILS_2.DWG Plotted on 28-Oct-2022 1:12 PM

Proposal No. 608930-128034

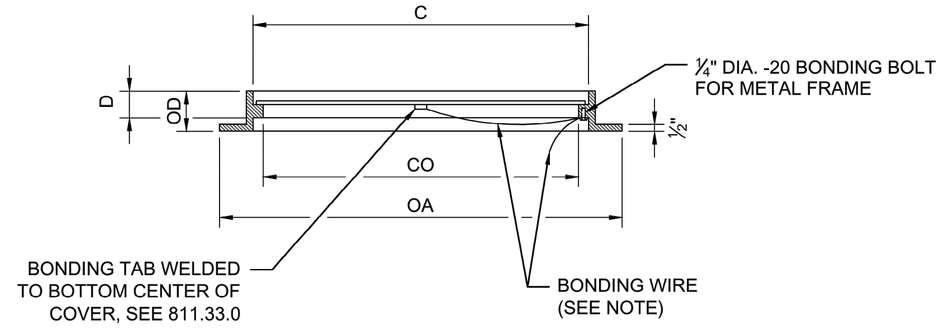

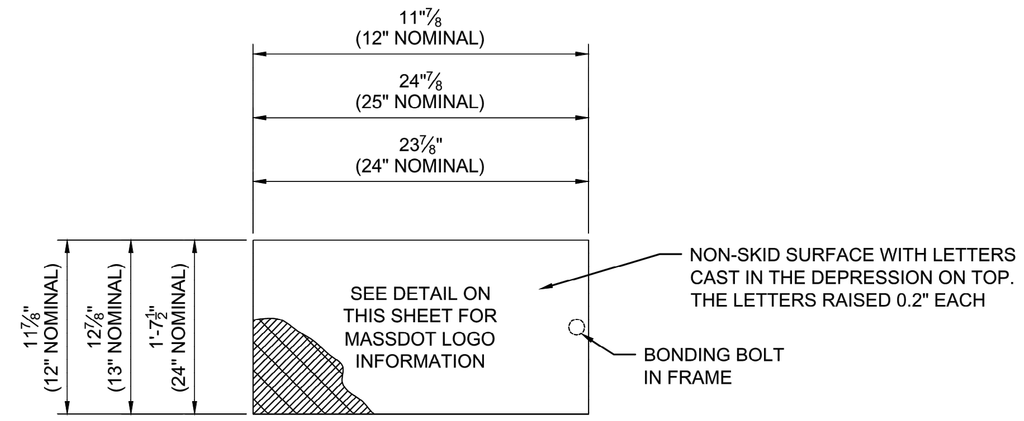

ELECTRIC HANDHOLE FRAME AND COVER DETAIL
N.T.S.

SIZE OF COVER	COVER DEPTH	OVERALL DEPTH	CLEAR OPENING	OVERALL	APPROX. WEIGHT	STANDARD DRAWING
C	D	OD	CO	OA	W	W
12" x 12"	1"	3½"	10½" x 10½"	17¼" x 17¼"	82 LB.	811.31.0
13" x 25"	1½"	3"	12" x 24"	20" x 29¾"	120 LB.	811.22.0 811.32.0
24" x 24"	1"	3"	22" x 22"	28½" x 28½"	190 LB.	811.23.0

NOTE:
ATTACH 3 FEET OF NO. 8 BONDING WIRE FROM COVER TAB TO BONDING BOLT ON FRAME. ATTACH SUFFICIENT LENGTH OF NO. 8 BONDING WIRE FROM BONDING BOLT ON FRAME TO THE BONDING WIRE ROUTED THROUGH THE PULL BOX.

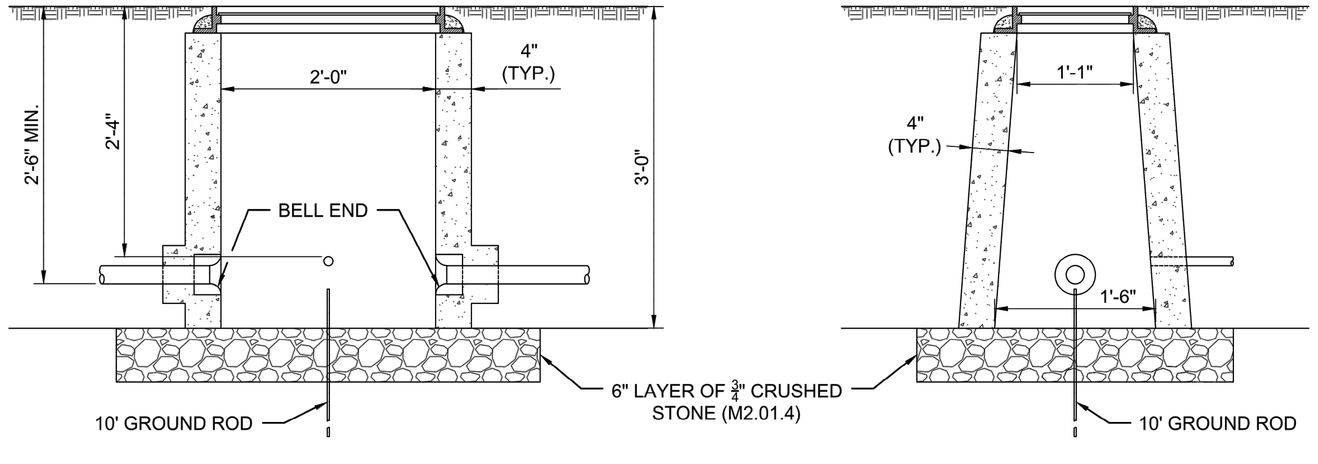

SECTIONS THROUGH ELECTRIC HANDHOLE (SD2-022)
N.T.S.

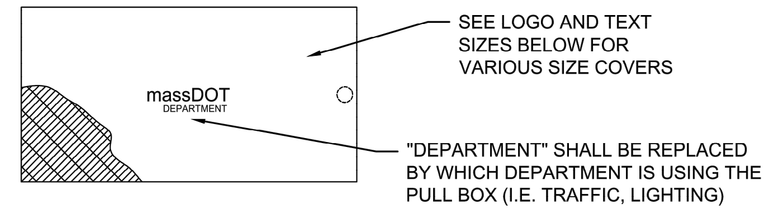

MASSDOT LOGO FOR ELECTRIC HANDHOLE
N.T.S.

NOTE:
1. LOGO AND TEXT SHALL BE CENTERED WITHIN THE COVER.
2. LOGO AND TEXT SHALL BE RAISED 0.2 INCHES FROM THE COVER SURFACE.
3. LOGO AND TEXT SHALL BE ITALICIZED AND SHALL UTILIZE THE "ERAS DEMI" STYLE FONT.

SIZE OF COVER	MASSDOT LOGO	DEPARTMENT TEXT SIZE	STANDARD DRAWING
12" x 12"	9" WIDE x 1.3" HIGH	TRAFFIC: 3" WIDE x 0.5" HIGH LIGHTING: 3.5" WIDE x 0.5" HIGH	811.31.1 811.31.2 811.32.1 811.32.2
12" x 8"	6" WIDE x 0.85" HIGH	TRAFFIC: 2" WIDE x 0.35" HIGH LIGHTING: 2.25" WIDE x 0.35" HIGH	
13" x 24"	13.25" WIDE x 2" HIGH	TRAFFIC: 3" WIDE x 0.5" HIGH LIGHTING: 3.5" WIDE x 0.5" HIGH	
CIRCULAR (24", 26" OR 27.5" DIAMETER)	13.25" WIDE x 2" HIGH	TRAFFIC: 3" WIDE x 0.5" HIGH LIGHTING: 3.5" WIDE x 0.5" HIGH	

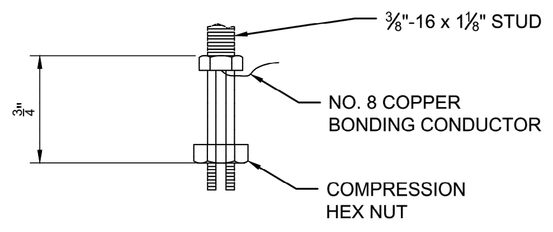

BONDING LUG
N.T.S.

NOTES:
1. BONDING POST CONNECTOR SHALL BE LONG STUD TYPE WHICH WILL ACCOMMODATE A DOUBLE CONDUCTOR INSTALLATION.
2. ATTACH 3 FOOT LENGTH OF NO.8 COPPER BONDING CONDUCTOR FROM BONDING POST CONNECTOR INSTALLED ON COVER TO BONDING POST CONNECTOR INSTALLED ON FRAME.
3. ATTACH FREE END OF BONDING CONDUCTOR ROUTED THROUGH CONDUIT SYSTEM TO BONDING POST CONNECTOR INSTALLED ON THE FRAME.
4. LUG SHALL BE EITHER COPPER OR BRASS.

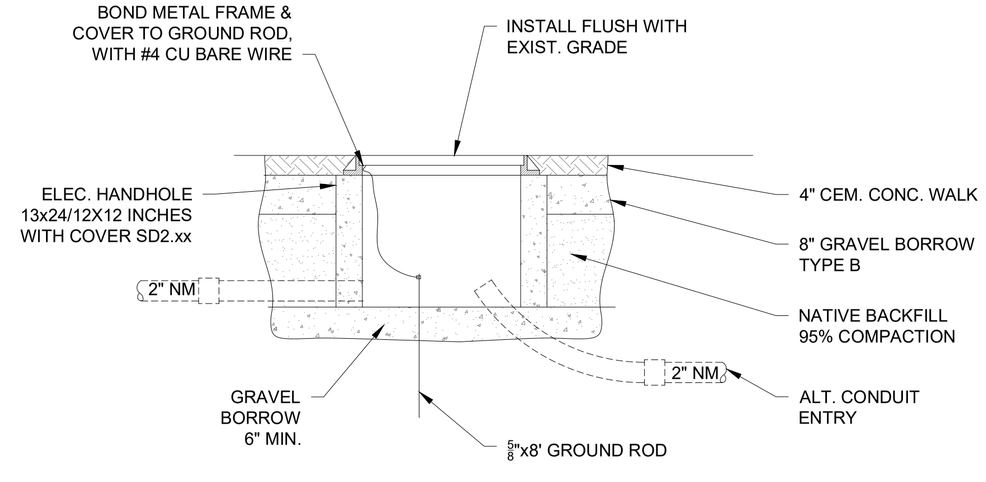

HANDHOLE INSTALLATION NOTES:
1. HANDHOLE ORIENTATION TO BE SUCH THAT ALL SUPPLY DUCTS ENTER ON SAME SHORT SIDE.
2. SIZE AND NUMBER OF CONDUITS AS REQUIRED.
3. CONDUIT LOCATIONS SHOWN ARE TYPICAL.
4. CEMENT SIDEWALK SHOWN. FOR BRICK SIDEWALK SEE CONSTRUCTION DETAILS SHEET.

ELECTRIC HANDHOLE INSTALLATION DETAIL
NOT TO SCALE

608930_HDS\CONSTRUCTION PLANS_LIGHTING_DETAILS_2.DWG Plotted on 28-Oct-2022 1:12 PM

Proposal No. 608930-128034

A00869 - 108

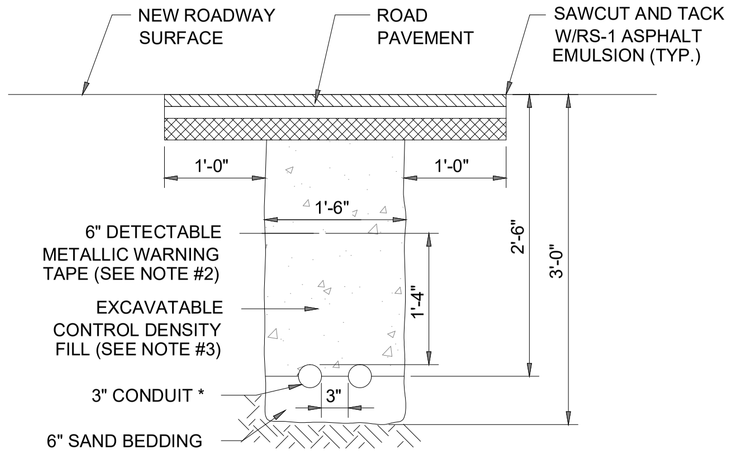

* = UNLESS OTHERWISE NOTED ON PLANS

NOTES:

1. SCHEDULE 80 ELECTRICAL CONDUIT TYPE NM-PLASTIC (UL) WITH PULL ROPE.
2. WARNING TAPE SHALL BE PER CURRENT APWA STANDARDS.
3. CONTROL DENSITY FILL SHALL MEET THE REQUIREMENTS OF SUBSECTION M4.08.0 AND SHALL BE USED WHEN CROSSING EXISTING PAVEMENT.

TRENCH DETAIL (ASPHALT)

NOT TO SCALE

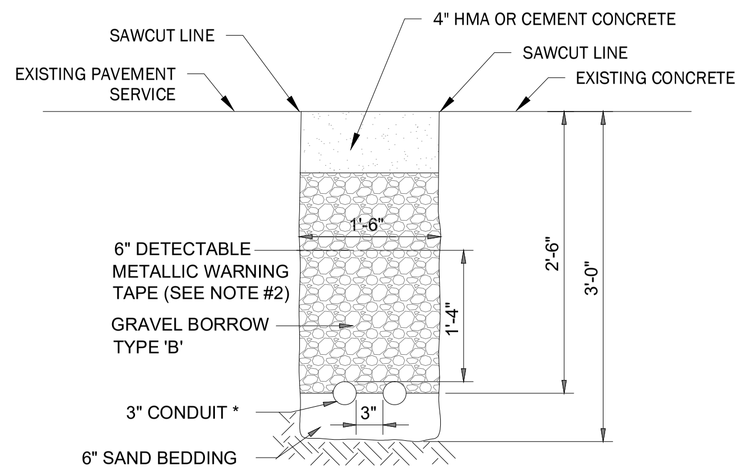

* = UNLESS OTHERWISE NOTED ON PLANS
** = BACKFILL DEEMED SUITABLE CAN BE USED AS BACKFILL WITH THE APPROVAL OF THE ENGINEER

NOTES:

1. SCHEDULE 80 ELECTRICAL CONDUIT TYPE NM-PLASTIC (UL) WITH PULL ROPE.
2. WARNING TAPE SHALL BE PER CURRENT APWA STANDARDS.

TRENCH DETAIL (CONCRETE SIDEWALK)

NOT TO SCALE

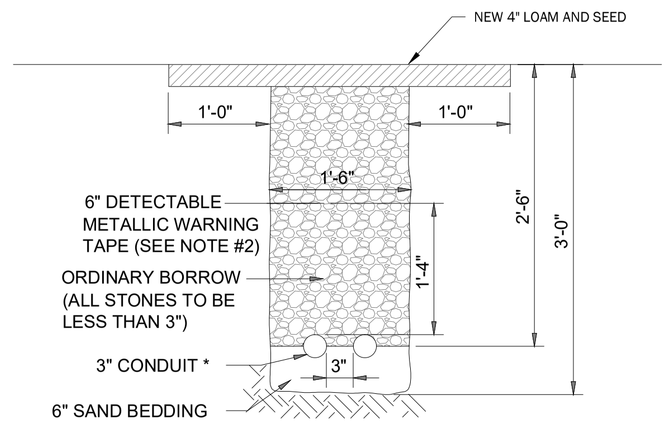

* = UNLESS OTHERWISE NOTED ON PLANS

NOTES:

1. SCHEDULE 80 ELECTRICAL CONDUIT TYPE NM-PLASTIC (UL) WITH PULL ROPE.
2. WARNING TAPE SHALL BE PER CURRENT APWA STANDARDS.

TRENCH DETAIL (GRASS)

NOT TO SCALE

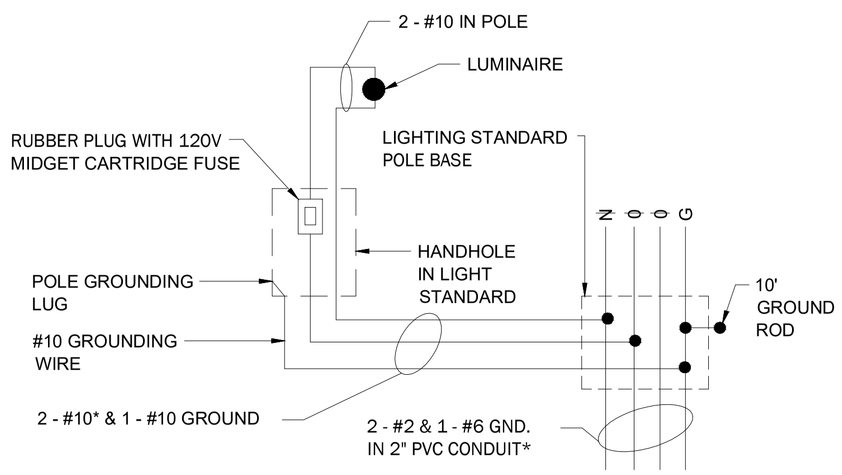

* = UNLESS OTHERWISE NOTED ON PLANS

WIRING DIAGRAM FOR SINGLE ARM PATHWAY LUMINAIRE

NOT TO SCALE

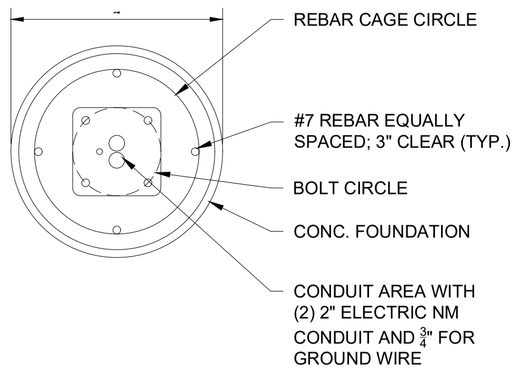

BASE PLATE LAYOUT

LIGHT POLE FOUNDATION NOTES:

1. BOLT PATTERN SHOWN IS TYPICAL AND NOT FOR CONSTRUCTION CONTRACTOR TO PROVIDE BOLT PATTERN DETAILS BASED ON SELECTED MANUFACTURER.
2. PROVIDE REBAR DETAIL FROM PRECAST CONCRETE VENDOR FOR APPROVAL.
3. CONDUIT LOCATIONS SHOWN ARE TYPICAL.

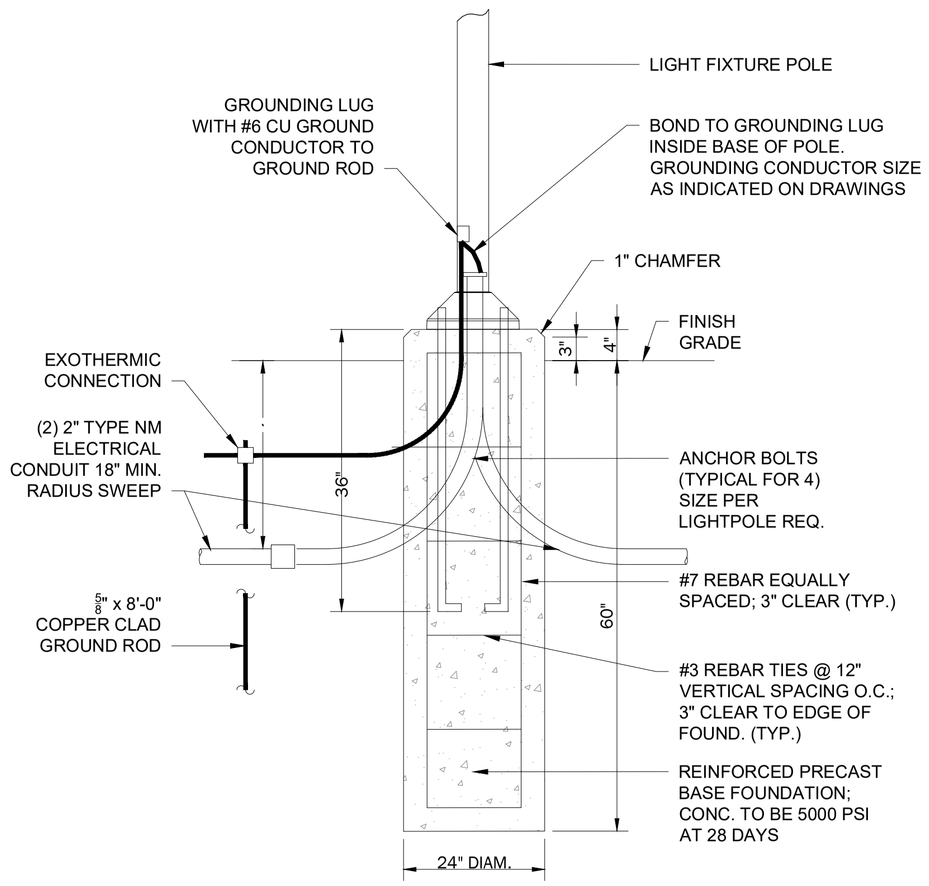

RAISED FOUNDATION

LIGHT POLE BASE DETAIL

NOT TO SCALE

STATE	FED. AID PROJ. NO.	SHEET NO.	TOTAL SHEETS
MA	-	90	225
PROJECT FILE NO.		608930	

LIGHTING DETAILS - 4 OF 4

'L1' SCHEDULE - 100A, 120/240, 1Ø, 24 POLE - TYPICAL FOR LCC-1 & 2										
	CIRCUIT BREAKER					WIRE SIZE				
CIRCUIT NUMBER	FRAME SIZE AMPS	TRIP SETTING	I C AMPS	POLES	VOLTAGE	NO.	WIRE SIZE	GROUND WIRE	NAME PLATE INSCRIPTION	REMARKS
1	100	20	10KAIC	1	120	2	12	12	CABINET EXHAUST FAN	
2	100	20	10KAIC	2	240	2	10	12	CABINET HEATER	
3	100	20	10KAIC	1	120	2	12	12	PHOTOCELL	
4	100	20	10KAIC	1	120	2	12	12	CABINET LIGHT AND RECP	
5	100	20	10KAIC	1	120	2	2	6	PATH AND BRIDGE LIGHTING	BRIDGE LTG LCC-1 ONLY
6	100	20	10KAIC	1	120	2	2	6	PATH AND BRIDGE LIGHTING	BRIDGE LTG LCC-1 ONLY
7	100	20	10KAIC	1	120	2	2	6	PATH LIGHTING	LCC-2 ONLY
8	100	20	10KAIC	1	120	2	2	6	PATH LIGHTING	LCC-2 ONLY
9	100	20	10KAIC	1	120	2	2	6	PATH LIGHTING	LCC-2 ONLY
10	100	20	10KAIC	1	120	2	2	6	PATH LIGHTING	LCC-2 ONLY

EXISTING PNLBD IN CABINET LCC-3										
	CIRCUIT BREAKER					WIRE SIZE				
CIRCUIT NUMBER	FRAME SIZE AMPS	TRIP SETTING	I C AMPS	POLES	VOLTAGE	NO.	WIRE SIZE	GROUND WIRE	NAME PLATE INSCRIPTION	REMARKS
1	100	20	10KAIC	1	120	2	2	6	PATH LIGHTING	
2	100	20	10KAIC	1	120	2	2	6	PATH LIGHTING	
3	100	20	10KAIC	1	120	2	2	6	PATH LIGHTING	
4	100	20	10KAIC	1	120	2	2	6	PATH LIGHTING	
5	100	20	10KAIC	1	120	2	2	6	PATH LIGHTING	
6	100	20	10KAIC	1	120	2	2	6	PATH LIGHTING	
7	-	-	-	-	-	-	-	-	EXISTING CKT	
8	-	-	-	-	-	-	-	-	EXISTING CKT	
8	-	-	-	-	-	-	-	-	EXISTING CKT	
9	-	-	-	-	-	-	-	-	EXISTING CKT	

FURNISH AND INSTALL BREAKERS IN EXISTING PANELBOARD AS SHOWN, CIRCUIT NUMBERS ARE FOR REFERENCE ONLY

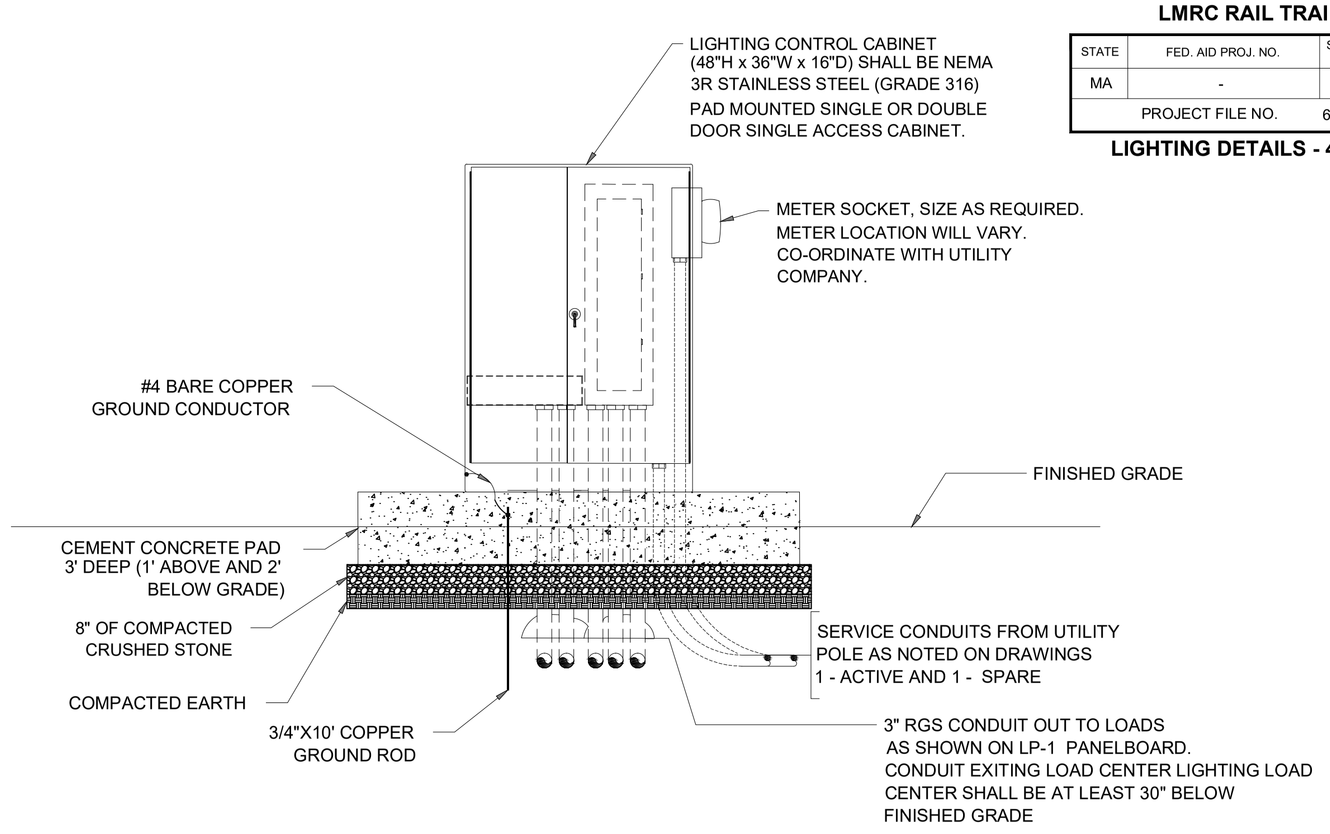

HIGHWAY LIGHTING LOAD CENTER EXTERIOR
TYPICAL FOR LCC1- & LCC-2
NOT TO SCALE

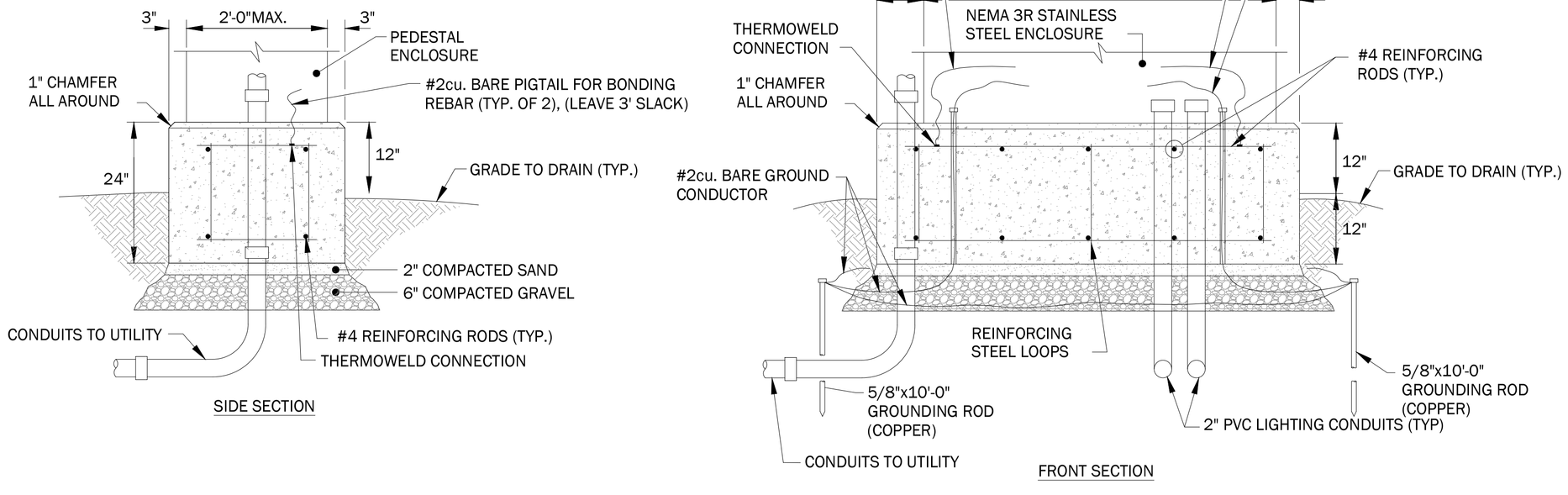

TYPICAL LIGHTING CONTROL CABINET 'LCC-1' & 'LCC-2
FOUNDATION DETAILS
NOT TO SCALE

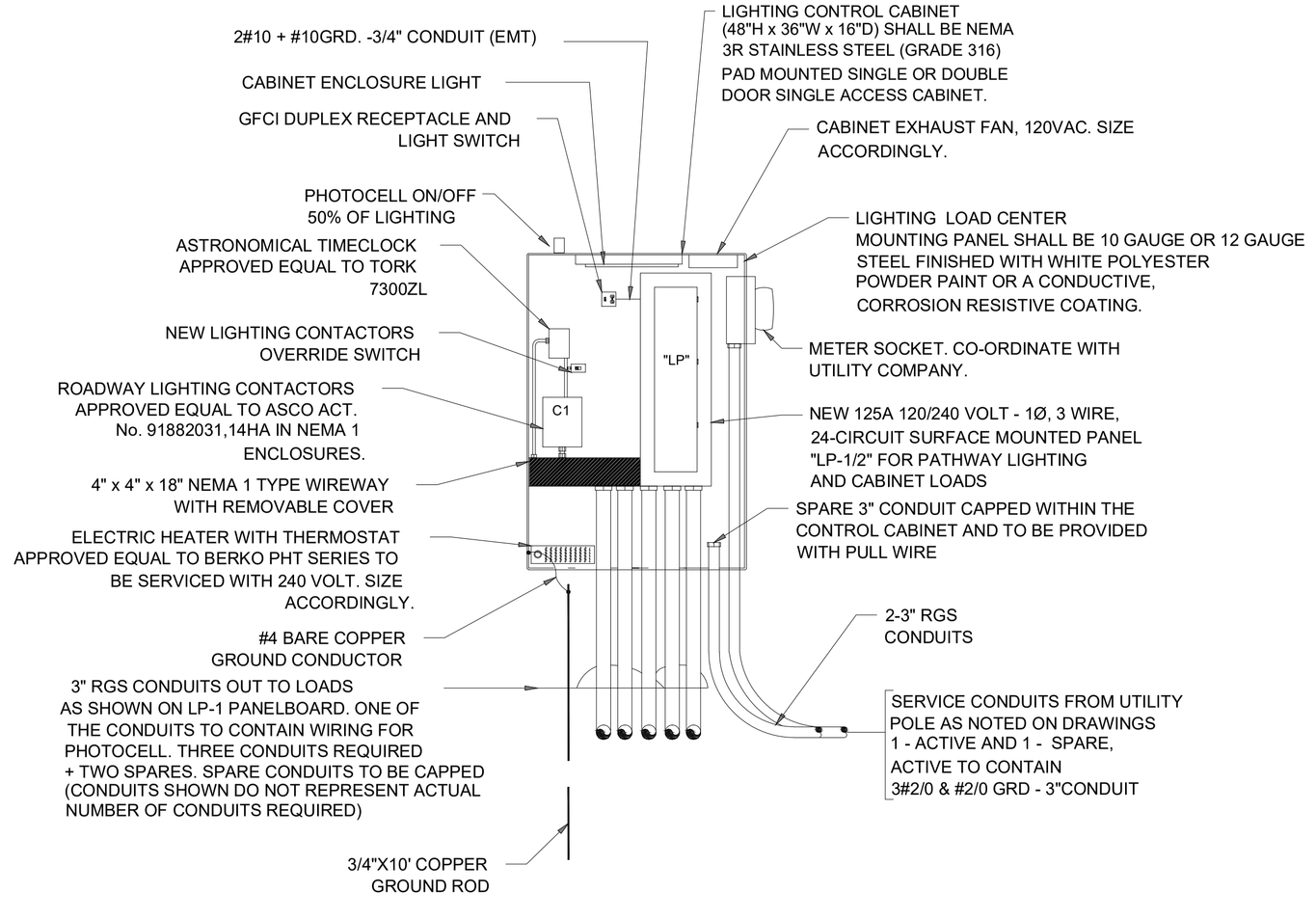

HIGHWAY LIGHTING LOAD CENTER INTERIOR
TYPICAL FOR LCC-1 & LCC-2
NOT TO SCALE

FOR PERMITTING PURPOSES - NOT FOR CONSTRUCTION

608930_HDS(CONSTRUCTION PLANS)_LIGHTING_DETAILS_2.DWG Plotted on 28-Oct-2022 1:13 PM

Proposal No. 608930-128034

A00869 - 109

PLANT SCHEDULE

SYM	PROJECT QUANTITY	BOTANICAL NAME	COMMON NAME	SIZE	COMMENTS	92	93	94	95	96	97	98	99	100	101	102	103	104	105	106
TREES																				
AR	0	Acer rubrum	Red Maple - 'October Glory'	1"-2" cal.																
ARX	0	Acer rubrum	Red Maple - 'October Glory'	3"-3.5" cal.																
AI	0	Alnus incana	Speckled Alder	5 GAL	Clump															
AC	0	Amelanchier canadensis	Shadblow Serviceberry	4'-5' FT.	Clump (5 stem min)															
BA	0	Betula alleganiensis	Yellow Birch	5'-6' FT.	Clump															
BAX	0	Betula alleganiensis	Yellow Birch	12'-14' FT.	Clump															
BL	0	Betula lenta	Black Birch	12'-14' FT.	Clump															
BLX	0	Betula lenta	Black Birch	8'-10' FT.	Clump															
CC	0	Carpinus caroliniana	American Hornbeam	8'-10' FT																
CG	0	Carya glabra	Pignut Hickory	2-2.5" cal.																
CO	0	Carya ovata	Shagbark Hickory	8'-10' FT.																
CE	0	Cercis canadensis	Eastern Redbud	1.5-2" cal.																
CT	0	Chamaecyparis thyoides	Eastern White Cedar	7'-8' FT.																
CR	0	Cornus x rutgersensis	Stellar Pink Dogwood	7'-8' FT.																
FG	0	Fagus grandifolia	American Beech	2"-2.5" cal.																
FGX	0	Fagus grandifolia	Amercan Beech	3"-3.5" cal.																
HV	0	Hamamelis virginiana	Common Witchhazel	3'-4' FT.	Clump															
IO-f	0	Ilex opaca (female)	American Holly (female)	6'-7' FT.																
IO-m	0	Ilex opaca (male)	American Holly (male)	6'-7' FT.																
JV	0	Juniperus virginiana	Eastern Red Cedar	4'-5' FT.																
LT	0	Liriodendron tulipifera	Tuliptree	1.5"-2" cal.																
LTX	0	Liriodendron tulipifera	Tuliptree	3"-3.5" cal.																
NS	0	Nyssa sylvatica	Black Tupelo	2"-2.5" cal.																
OV	0	Ostrya virginiana	Hop Hornbeam	8'-10' FT.																
PG	0	Picea glauca	White Spruce	5'-6' FT.																
PGX	0	Picea glauca	White Spruce	7'-8' FT.																
PM	0	Picea mariana	Black Spruce	8'-10' FT.																
PR	0	Pinus resinosa	Red Pine	5'-6' FT.																
PPX	0	Pinus rigida	Pitch Pine	7'-8' FT.																
PP	0	Pinus rigida	Pitch Pine	4'-5' FT.																
PS	0	Pinus strobus	Eastern White Pine	5'-6' FT.																
PV	0	Prunus virginiana 'Shubert'	Shubert' Choke Cherry	1.5"-2" cal.																
QA	0	Quercus alba	White Oak	1.5"-2" cal.																
QB	0	Quercus bicolor	Swamp White Oak	1.5"-2" cal.																
QBX	0	Quercus bicolor	Swamp White Oak	2"-2.5" cal.																
QC	0	Quercus coccinea	Scarlet Oak	10'-12' FT.																
QCX	0	Quercus coccinea	Scarlet Oak	2"-2.5" cal.																
QP	0	Quercus palustris	Pin Oak	1"-2" cal.																
QPX	0	Quercus palustris	Pin Oak	2"-2.5" cal.																
QR	0	Quercus rubra	Red Oak	1"-2" cal.																
QRX	0	Quercus rubra	Red Oak	2"-2.5" cal.																
SA	0	Sassafras albidum	Sassafras	1.5"-2" cal.																
				Total all Trees	0															
SHRUBS																				
Handle Moist Conditions																				
ARA	0	Aronia arbutifolia	Red Chokeberry	18"-24" HT.	3' o.c. spacing															
CLA	0	Clethra alnifolia	Summersweet	18"-24" HT.	4' o.c. spacing															
COA	0	Cornus amomum	Silky Dogwood	18"-24" HT.	4' o.c. spacing															
COR	0	Cornus racemosa	Gray Dogwood	18"-24" HT.	4' o.c. spacing															
COS	0	Cornus sericea	Red Osier Dogwood	18"-24" HT.	4' o.c. spacing															
FOM	0	Fothergilla minor	Dwarf Fothergilla	18"-24" HT.	3' o.c. spacing															
ILG	0	Ilex glabra	Inkberry	24"-36" HT.	3' o.c. spacing															
ILV-f	0	Ilex verticillata (female)	Winterberry (female)	18"-24" HT.	3' o.c. spacing															
ILV-m	0	Ilex verticillata (male)	Winterberry (male)	18"-24" HT.	3' o.c. spacing															
LIB	0	Lindera benzoin	Spicebush	18"-24" HT.	4' o.c. spacing															
RHV	0	Rhododendron viscosum	Swamp Azalea	18"-24" HT.	3' o.c. spacing															
SPL	0	Spirea latifolia	Broad-Leaf Meadowsweet	24"-30" HT.	3' o.c. spacing															
SPT	0	Spirea tomentosa	Steeplebush	24"-30" HT.	3' o.c. spacing															
VAC	0	Vaccinium corymbosum	Highbush Blueberry	24"-36" HT.	4' o.c. spacing															
VID	0	Viburnum dentatum	Arrowwood Viburnum	24"-36" HT.	5' o.c. spacing															
Handle Drier Conditions																				
CAF	0	Calycanthus floridus	Carolina Allspice	24"-30" HT.	4' o.c. spacing															
COM	0	Comptonia peregrina	Sweetfern	1 GAL. POT	18" o.c. spacing															
KAL	0	Kalmia latifolia	Mountain Laurel	24"-30" HT.	5' o.c. spacing															
KAA	0	Kalmia angustifolia	Sheep Laurel	24"-30" HT.	5' o.c. spacing															
MYG	0	Myrica gale	Sweetgale	18"-24" HT.	3' o.c. spacing															
MYP	0	Myrica pennsylvanica	Bayberry	24"-30" HT.	5' o.c. spacing															
RHM	0	Rhododendron maximum	Rosebay Rhododendron	30"-36" HT.	5' o.c. spacing															
RAG	0	Rhus aromatica 'Gro-Low'	Gro-Low Fragrant Sumac	18"-24" HT.	4' o.c. spacing															
VIA	0	Vibrunum acerifolium	Maple Leaf Viburnum	18"-24" HT.	4' o.c. spacing															
VIT	0	Viburnum trilobum	American Cranberrybush	24"-36" HT.	4' o.c. spacing															
				Total	0	0	0	0	0	0	0	0	0	0						0
GROUNDCOVER, FERNS, AND VINES																				
DRM	0	Dryopteris marginalis	Marginal Wood Fern	1 GAL. POT	18" o.c. spacing															
JCC	0	Juniper conferta	Shore Juniper	2 GAL. POT	24" o.c. spacing															
HAP	0	Hydrangea anomala petiolaris	Climbing Hydrangea	1 GAL. POT	As Shown															
PTA	0	Pteridium aquilinum	Bracken Fern	1 GAL. POT	18" o.c. spacing															
				Total	0	0	0	0	0	0	0	0	0	0						0

LAWRENCE
LMRC RAIL TRAIL

STATE	FED. AID PROJ. NO.	SHEET NO.	TOTAL SHEETS
MA	-	91	225
PROJECT FILE NO.	608930		

LANDSCAPE PLAN - 1 OF 16

GENERAL NOTES

No	
1	CONTRACTOR SHALL REVIEW ALL DRAWINGS AND SPECIFICATIONS TO DETERMINE THE TOTAL SCOPE OF WORK AND ALL REQUIRED COORDINATION.
2	THE CONTRACTOR IS RESPONSIBLE FOR A THOROUGH SITE EXAMINATION TO VERIFY ASSUMPTIONS OF THE ACTUAL SITE CONDITIONS BEFORE SUBMISSION OF BIDS.
3	REQUIRED SHOP DRAWINGS FOR ALL PRE-CAST WALL BASES, SEAT WALLS, STEP WALLS AND CONCRETE FOOTINGS, ETC., SHALL BE BASED ON FIELD MEASUREMENT AND LAYOUT VERIFICATION BY THE CONTRACTOR.
4	STORAGE AREAS FOR THE GENERAL CONTRACTOR'S EQUIPMENT AND MATERIALS SHALL BE LOCATED WITHIN THE LIMITS OF WORK AS APPROVED.
5	WHERE NEW PAVING MEETS EXISTING PAVING, MEET LINE AND GRADE OF EXISTING WITH NEW CONSTRUCTION.
6	THE DIMENSIONS SHOWN ON THE DRAWINGS INDICATE DESIGN INTENT AND MUST BE FIELD VERIFIED PRIOR TO PREPARATION OF SHOP DRAWINGS.
7	AT ALL LOCATIONS WHERE EXISTING BITUMINOUS CONCRETE ROADWAY ABUTS NEW CONSTRUCTION, THE EDGE OF THE EXISTING PAVEMENT SHALL BE SAWCUT TO A CLEAN SMOOTH EDGE.
8	EXPANSION JOINT FILLER AND SEALANT SHALL BE PLACED WHERE PAVEMENT MEETS CURBING, WALLS OR OTHER VERTICAL ELEMENTS, INCLUDING LIGHT BASES, WALLS, AND AT OTHER CONDITIONS AS SHOWN ON THE DRAWINGS.
9	REFER TO LANDSCAPE DRAWINGS FOR PAVING & STRUCTURAL EXPANSION JOINT COORDINATION. PAVING EXPANSION JOINT LAYOUT IS DIAGRAMMATIC ONLY. CONTRACTOR SHALL SUBMIT SHOP DRAWINGS FOR LAYOUT BASED ON FIELD VERIFIED MEASUREMENTS, AND REQUEST THE PRESENCE OF THE LANDSCAPE ARCHITECT TO REVIEW THE LAYOUT OF EXPANSION JOINTS PRIOR TO POURING THE CONCRETE.
10	NO CHIPPED PAVERS WILL BE ACCEPTED. ALL CHIPPED PAVERS INSTALLED WILL BE REJECTED.
11	CONTRACTOR SHALL PROVIDE STAMPED SURVEY AS-BUILT DRAWINGS CONFIRMING MAXIMUM CROSS SLOPES FOR ALL PAVEMENTS AS SHOWN ON THE CONSTRUCTION DRAWINGS.
12	THE CONTRACTOR SHALL EMPLOY A LICENSED SURVEYOR OR REGISTERED CIVIL ENGINEER TO VERIFY AND LAY OUT ALL GRADES, LINES, AND DIMENSIONS AS SHOWN ON ALL DRAWINGS, EXCEPT THE PLANTING PLANS. THE LANDSCAPE ARCHITECT BEARS NO RESPONSIBILITY FOR THE ACCURACY OF THE SURVEY PROVIDED; ALL INFORMATION SHALL BE VERIFIED IN THE FIELD. IT IS THE RESPONSIBILITY OF THE CONTRACTOR TO REPORT ANY DISCREPANCIES IMMEDIATELY.
13	ALL NEW PAVEMENT AREAS SHALL BE PITCHED SO AS TO PROVIDE POSITIVE DRAINAGE AWAY TOWARDS THE STREET CURB.
14	THE CONTRACTOR SHALL NOTIFY THE LANDSCAPE ARCHITECT BEFORE PLACING ANY PAVEMENT WITH A CROSS PITCH THAT IS GREATER THAN 2%, LESS THAN 1%, AND NOT NOTED AS SUCH ON THE DRAWINGS. PITCH EVENLY BETWEEN SPOT GRADES. ALL PAVED AREAS MUST PITCH TO DRAIN AT A MINIMUM OF ONE-EIGHTH INCH (1/8") PER FOOT.
15	RIM ELEVATIONS OF ALL DRAINAGE STRUCTURES AND OTHER UTILITY STRUCTURES SHALL BE SET FLUSH WITH FINAL SURROUNDING GRADES SO AS NOT TO CAUSE A TRIP EDGE.
16	THE CONTRACTOR IS RESPONSIBLE FOR ALL DAMAGE INSIDE OR OUTSIDE OF PROPERTY LINE DUE TO CONSTRUCTION OPERATIONS.
17	THE CONTRACTOR SHALL USE BENCH-MARKS THROUGHOUT THE CORRIDOR FOR ALL CONSTRUCTION WORK.
18	FINAL SHAPING OF ALL EARTHWORK SHALL BE DIRECTED AND APPROVED IN THE FIELD
19	LANDSCAPE ARCHITECT TO REVIEW AND APPROVE SUBGRADE IN PLANT BEDS PRIOR TO PLACING ANY LOAM.
20	PROVIDE POSITIVE DRAINAGE AWAY FROM FACE OF BUILDING AT ALL LOCATIONS.
21	THE GENERAL CONTRACTOR SHALL BLEND NEW EARTHWORK SMOOTHLY INTO EXISTING EARTHWORK.
22	ANY ALTERATIONS TO THESE DRAWINGS MADE IN THE FIELD DURING CONSTRUCTION SHALL BE RECORDED BY THE GENERAL CONTRACTOR ON "AS BUILT" DRAWINGS AND BE PRE-APPROVED WITH LANDSCAPE ARCHITECT.
23	EXCAVATION REQUIRED WITHIN PROXIMITY OF EXISTING UTILITY LINES OR TREES TO REMAIN SHALL BE DONE BY HAND. THE GENERAL CONTRACTOR SHALL REPAIR ANY DAMAGE TO EXISTING UTILITY LINES OR STRUCTURES INCURRED DURING CONSTRUCTION OPERATIONS AT NO COST TO THE OWNER.
24	THE GENERAL CONTRACTOR SHALL PROVIDE DUST CONTROL FOR CONSTRUCTION OPERATIONS AS APPROVED BY LANDSCAPE ARCHITECT.
25	ALL POINTS OF CONSTRUCTION ENTRY OR EXIT SHALL BE MAINTAINED TO PREVENT TRACKING OR FLOWING OF SEDIMENT ONTO PUBLIC ROADS.
26	SEE EARTHWORK SECTION OF SPECIFICATIONS FOR SPECIFIC EXCAVATION AND FILLING PROCEDURES. NO TOPSOIL OR EXISTING ON-SITE FILL MATERIAL SHALL BE REMOVED FROM THE SITE UNLESS APPROVED IN ADVANCE BY THE LANDSCAPE ARCHITECT.
27	ALL LINES ARE PARALLEL, PERPENDICULAR, OR 45 DEGREES TO THE LINES FROM WHICH THEY ARE MEASURED UNLESS OTHERWISE NOTED.
28	THE DIMENSIONS OF CONCRETE AND STONE PAVEMENT MODULES AS SHOWN ON THE DRAWINGS ARE TO THE CENTER LINE OF EACH TYPE OF JOINT EXCEPT WHERE PAVEMENT MEETS A VERTICAL FACE; AT THIS LOCATION DIMENSIONS ARE TO THE VERTICAL FACE. THE DIMENSIONS SHOWN ON DRAWINGS SHOW DESIGN INTENT AND MUST BE FIELD VERIFIED PRIOR TO PREPARATION OF SHOP DRAWINGS.
29	THE CONTRACTOR SHALL BE RESPONSIBLE FOR DOCUMENTING THE LOCATIONS OF ALL EXISTING SITE ELEMENTS TO BE RESET IN THEIR SAME HORIZONTAL LOCATION. SUCH ITEMS MAY INCLUDE: STREET SIGNS, UTILITIES, HYDRANTS, STREET LIGHTS, PARKING METERS, ETC.
30	AT ALL LOCATIONS WHERE EXISTING CURBING, BITUMINOUS CONCRETE, OR CONCRETE PAVEMENT ABUT NEW CONSTRUCTION, THE EDGE OF THE EXISTING CURB OR PAVEMENT SHALL BE SAWCUT TO A CLEAN, SMOOTH EDGE AND EITHER PARALLEL OR PERPENDICULAR TO THE NEAREST CURB
31	DIMENSIONS TO SITE OR BUILDING WALLS ARE TO THE OUTSIDE (OR EXPOSED) FACE OF WALL UNLESS OTHERWISE NOTED.

PLANTING NOTES

No	
1	PLANT LOCATIONS ARE APPROXIMATE. PRIOR TO PLANTING, LOCATION OF ALL PLANT MATERIAL WILL BE APPROVED BY THE RESIDENT ENGINEER AND LANDSCAPE ARCHITECT.
2	ALL PLANT MATERIAL WILL HAVE TAGS INDICATING COMMON NAME, BOTANICAL NAME, CULTIVAR, & SIZE.
3	IMMEDIATELY AFTER ACCEPTANCE OF PLANTING, TAGS AND RIBBONS SHALL BE REMOVED.
4	ALL PLANTS WILL BE MULCHED PER PLANS AND SPECIFICATIONS.
5	ALL SHRUBS, AND PERENNIAL BEDS WILL BE WEEDED AND OTHERWISE NEATLY MAINTAINED FOR THE DURATION OF THE CONTRACT.
5	PLANT AND PLANTING BEDS SHALL BE THOROUGHLY WATERED AS NECESSARY AND PER SPECIFICATIONS.

FOR PERMITTING PURPOSES - NOT FOR CONSTRUCTION

A00869 - 110

Proposal No. 608930-128034

LANDSCAPE_SHEETS.DWG Plotted on 28-Oct-2022 12:03 PM

LANDSCAPE_SHEETS.DWG Plotted on 28-Oct-2022 12:04 PM

LAWRENCE
LMRC RAIL TRAIL

STATE	FED. AID PROJ. NO.	SHEET NO.	TOTAL SHEETS
MA	-	92	225
	PROJECT FILE NO. 608930		

LANDSCAPE PLAN - 2 OF 16

SITE IMPROVEMENT LEGEND

S1	WEATHERING STEEL VERTICAL GATEWAY ELEMENT
S2	WEATHERING STEEL SLOPED AND BATTERED WALL WITH WOOD BENCH
S3	WEATHERING STEEL SLOPED PLANTER WALL
S4	WEATHERING STEEL SLOPED BENCH WALL
S5a	TRAIL PATH LIGHT
S5b	DECORATIVE COLUMN LIGHT
S6	TIMBER SEAT STEPS
S7	STACKED TIMBER SEATING PLATFORM
S8	SCULPTURAL SWING ELEMENT
S9	SPECIAL CONCRETE PERFORMANCE PLATFORMS
S10	SPECIAL CONCRETE SKATEBOARD PUMP TRACK PATH WITH EMBEDS
S11	SPECIAL CONCRETE SEAT WALL
S11a	SPECIAL CONCRETE SEAT WALL WITH TIMBER SEAT
S12	SPECIAL CONCRETE SEAT STEPS
S13	SPECIAL STEPPING STONES
S14	GAMING TABLE AND CHAIRS
S14A	TABLE AND CHAIRS
S15	PICNIC TABLE (*HANDICAPPED)
S16	SITE BENCH
S17	BIKE RACK
S18	TRASH RECEPTACLE
S19	BASKETBALL HOOP ASSEMBLY
S20	6 FT CHAIN LINK FENCE
S21	WEATHERING STEEL SCREEN FENCE - TYPE 1
S22	WEATHERING STEEL SCREEN FENCE - TYPE 2
S23	NOT USED
S24	WOODEN SAFETY RAIL
S25	WOOD RAIL FENCE WITH GUARDRAIL

PLANTING LEGEND

- EXISTING TREE TO REMAIN & TREE PROTECTION
- DECIDUOUS TREE
- FLOWERING TREE
- EVERGREEN TREE
- SHRUB & ORNAMENTAL GRASS PLANTING
- SHORT GRASSLAND MIX
- MID-HEIGHT POLLINATOR MIX
- WETLAND MIX - PART SHADE MIX

GENERAL NOTE:
1. REFER TO PRIOR INVASIVE SPECIES REMOVAL PROGRAM PER CITY

- LIMIT OF WORK
- TEMPORARY EASEMENT LINE

SCALE: 1" = 20'

FOR PERMITTING PURPOSES - NOT FOR CONSTRUCTION

LANDSCAPE_SHEETS.DWG Plotted on 28-Oct-2022 12:45 PM

LAWRENCE
LMRC RAIL TRAIL

STATE	FED. AID PROJ. NO.	SHEET NO.	TOTAL SHEETS
MA	-	93	225
	PROJECT FILE NO. 608930		

LANDSCAPE PLAN - 3 OF 16

SITE IMPROVEMENT LEGEND

S1	○	WEATHERING STEEL VERTICAL GATEWAY ELEMENT
S2		WEATHERING STEEL SLOPED AND BATTERED WALL WITH WOOD BENCH
S3		WEATHERING STEEL SLOPED PLANTER WALL
S4		WEATHERING STEEL SLOPED BENCH WALL
S5a	✳	TRAIL PATH LIGHT
S5b	✕	DECORATIVE COLUMN LIGHT
S6		TIMBER SEAT STEPS
S7		STACKED TIMBER SEATING PLATFORM
S8		SCULPTURAL SWING ELEMENT
S9		SPECIAL CONCRETE PERFORMANCE PLATFORMS
S10		SPECIAL CONCRETE SKATEBOARD PUMP TRACK PATH WITH EMBEDS
S11		SPECIAL CONCRETE SEAT WALL
S11a		SPECIAL CONCRETE SEAT WALL WITH TIMBER SEAT
S12		SPECIAL CONCRETE SEAT STEPS
S13		SPECIAL STEPPING STONES
S14		GAMING TABLE AND CHAIRS
S14A		TABLE AND CHAIRS
S15		PICNIC TABLE (*HANDICAPPED)
S16		SITE BENCH
S17		BIKE RACK
S18		TRASH RECEPTACLE
S19		BASKETBALL HOOP ASSEMBLY
S20		6 FT CHAIN LINK FENCE
S21		WEATHERING STEEL SCREEN FENCE - TYPE 1
S22		WEATHERING STEEL SCREEN FENCE - TYPE 2
S23		NOT USED
S24		WOODEN SAFETY RAIL
S25		WOOD RAIL FENCE WITH GUARDRAIL

PLANTING LEGEND

- EXISTING TREE TO REMAIN & TREE PROTECTION
- DECIDUOUS TREE
- FLOWERING TREE
- EVERGREEN TREE
- SHRUB & ORNAMENTAL GRASS PLANTING
- SHORT GRASSLAND MIX
- MID-HEIGHT POLLINATOR MIX
- WETLAND MIX - PART SHADE MIX

GENERAL NOTE:
1. REFER TO PRIOR INVASIVE SPECIES REMOVAL PROGRAM PER CITY

- LIMIT OF WORK
- TEMPORARY EASEMENT LINE

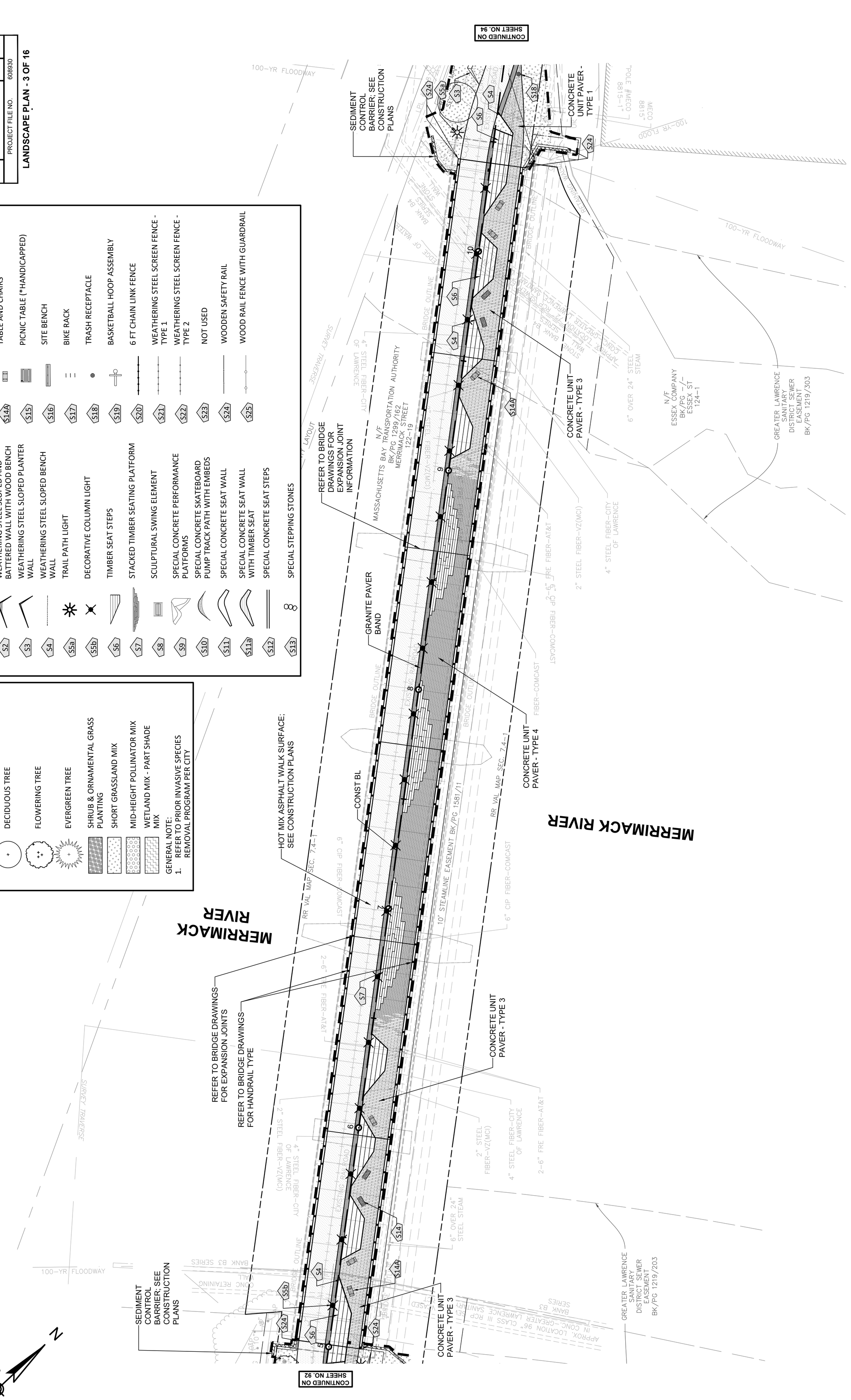

FOR PERMITTING PURPOSES - NOT FOR CONSTRUCTION

LANDSCAPE_SHEETS.DWG Plotted on 28-Oct-2022 12:05 PM

LAWRENCE
LMRC RAIL TRAIL

STATE	FED. AID PROJ. NO.	SHEET NO.	TOTAL SHEETS
MA	-	94	225
PROJECT FILE NO.	608930		

LANDSCAPE PLAN - 4 OF 16

LIMIT OF WORK
TEMPORARY EASEMENT LINE

PLANTING LEGEND

- EXISTING TREE TO REMAIN & TREE PROTECTION
- DECIDUOUS TREE
- FLOWERING TREE
- EVERGREEN TREE
- SHRUB & ORNAMENTAL GRASS PLANTING
- SHORT GRASSLAND MIX
- MID-HEIGHT POLLINATOR MIX
- WETLAND MIX - PART SHADE MIX

GENERAL NOTE:
1. REFER TO PRIOR INVASIVE SPECIES REMOVAL PROGRAM PER CITY

SITE IMPROVEMENT LEGEND

- S1 WEATHERING STEEL VERTICAL GATEWAY ELEMENT
- S2 WEATHERING STEEL SLOPED AND BATTERED WALL WITH WOOD BENCH
- S3 WEATHERING STEEL SLOPED PLANTER WALL
- S4 WEATHERING STEEL SLOPED BENCH WALL
- S5a TRAIL PATH LIGHT
- S5b DECORATIVE COLUMN LIGHT
- S6 TIMBER SEAT STEPS
- S7 STACKED TIMBER SEATING PLATFORM
- S8 SCULPTURAL SWING ELEMENT
- S9 SPECIAL CONCRETE PERFORMANCE PLATFORMS
- S10 SPECIAL CONCRETE SKATEBOARD PUMP TRACK PATH WITH EMBEDS
- S11 SPECIAL CONCRETE SEAT WALL
- S11a SPECIAL CONCRETE SEAT WALL WITH TIMBER SEAT
- S12 SPECIAL CONCRETE SEAT STEPS
- S13 SPECIAL STEPPING STONES
- S14 GAMING TABLE AND CHAIRS
- S14A TABLE AND CHAIRS
- S15 PICNIC TABLE (*HANDICAPPED)
- S16 SITE BENCH
- S17 BIKE RACK
- S18 TRASH RECEPTACLE
- S19 BASKETBALL HOOP ASSEMBLY
- S20 6 FT CHAIN LINK FENCE
- S21 WEATHERING STEEL SCREEN FENCE - TYPE 1
- S22 WEATHERING STEEL SCREEN FENCE - TYPE 2
- S23 NOT USED
- S24 WOODEN SAFETY RAIL
- S25 WOOD RAIL FENCE WITH GUARDRAIL

NAD 83

SEDIMENT CONTROL BARRIER; SEE CONSTRUCTION PLANS

BROADWAY - ROUTE 28 (PUBLIC)

HOT MIX ASPHALT WALK SURFACE; SEE CONSTRUCTION PLANS

CONST BL

PC +77.47

PCC +21.75

13RC +99.22

PT +66.47

CONCRETE UNIT PAVER - TYPE 1

GRANITE PAVER BAND

CONTINUED ON SHEET NO. 93

STEAMLINE EASEMENT BK/PG 1581/11

N/F MASSACHUSETTS ELECTRIC COMPANY BK/PG 1011/438 BROADWAY 143–23

N/F MERRIMACK FALLS LLC BK/PG 12492/11 BROADWAY PL 7841, PL 8527 143–22

4" STEEL FIBER–CITY OF LAWRENCE FIBER

N/F HODEN FAMILY REALTY, LLC BK/PG 16201/145 3–5 WATER ST 144–2

N/F SLEIMAN A. RAMY BK/PG 7532/159 1 WATER STREET PL 4296 144–3

PROPOSED CONCRETE CURB RAMP WITH DETECTABLE WARNING PANEL (TYP)

CONCRETE UNIT PAVER - TYPE 1

CONCRETE UNIT PAVER - TYPE 2

CONST BL

16+00

24+75

CONTINUED ON SHEET NO. 95

40' PASSAGEWAY

100-FT BUFFER ZONE

500-YR FLOOD

1935 COUNTY LAYOUT

1849 COUNTY LAYOUT

1874 CITY LAYOUT

N/F ESSEX COMPANY BK/PG –/– WATER ST 144–27–1

N/F NUNEZ LLC BK/PG 16673/321 468 CANAL STREET 144–28

N/F 6–12 HAMPSHIRE STREET, LLC BK/PG 13424/72 606 CANAL STREET 144–27–2

NORTH CANAL

CANAL STREET (PUBLIC - 50' WIDE)

N/F BROADWAYCANAL–1 LLC BK/PG 16328/128 3 BROADWAY 144–24

0 20 50 100

SCALE: 1" = 20'

FOR PERMITTING PURPOSES - NOT FOR CONSTRUCTION

LANDSCAPE_SHEETS.DWG Plotted on 28-Oct-2022 12:06 PM

NAD 83

N

LIMIT OF WORK

TEMPORARY EASEMENT LINE

PLANTING LEGEND

- EXISTING TREE TO REMAIN & TREE PROTECTION
- DECIDUOUS TREE
- FLOWERING TREE
- EVERGREEN TREE
- SHRUB & ORNAMENTAL GRASS PLANTING
- SHORT GRASSLAND MIX
- MID-HEIGHT POLLINATOR MIX
- WETLAND MIX - PART SHADE MIX

GENERAL NOTE:
1. REFER TO PRIOR INVASIVE SPECIES REMOVAL PROGRAM PER CITY

SITE IMPROVEMENT LEGEND

- S1 WEATHERING STEEL VERTICAL GATEWAY ELEMENT
- S2 WEATHERING STEEL SLOPED AND BATTERED WALL WITH WOOD BENCH
- S3 WEATHERING STEEL SLOPED PLANTER WALL
- S4 WEATHERING STEEL SLOPED BENCH WALL
- S5a TRAIL PATH LIGHT
- S5b DECORATIVE COLUMN LIGHT
- S6 TIMBER SEAT STEPS
- S7 STACKED TIMBER SEATING PLATFORM
- S8 SCULPTURAL SWING ELEMENT
- S9 SPECIAL CONCRETE PERFORMANCE PLATFORMS
- S10 SPECIAL CONCRETE SKATEBOARD PUMP TRACK PATH WITH EMBEDS
- S11 SPECIAL CONCRETE SEAT WALL
- S11a SPECIAL CONCRETE SEAT WALL WITH TIMBER SEAT
- S12 SPECIAL CONCRETE SEAT STEPS
- S13 SPECIAL STEPPING STONES
- S14 GAMING TABLE AND CHAIRS
- S14A TABLE AND CHAIRS
- S15 PICNIC TABLE (*HANDICAPPED)
- S16 SITE BENCH
- S17 BIKE RACK
- S18 TRASH RECEPTACLE
- S19 BASKETBALL HOOP ASSEMBLY
- S20 6 FT CHAIN LINK FENCE
- S21 WEATHERING STEEL SCREEN FENCE - TYPE 1
- S22 WEATHERING STEEL SCREEN FENCE - TYPE 2
- S23 NOT USED
- S24 WOODEN SAFETY RAIL
- S25 WOOD RAIL FENCE WITH GUARDRAIL

LAWRENCE
LMRC RAIL TRAIL

STATE	FED. AID PROJ. NO.	SHEET NO.	TOTAL SHEETS
MA	-	95	225
PROJECT FILE NO.	608930		

LANDSCAPE PLAN - 5 OF 16

CONCRETE UNIT PAVER - TYPE 1

CEMENT CONCRETE SIDEWALK ; SEE CONSTRUCTION PLANS

SCORE JOINTS

HOT MIX ASPHALT WALK SURFACE; SEE CONSTRUCTION PLANS

PROP TEMP EASEMENT; SEE CONSTRUCTION PLANS

BIO RETENTION BASIN; SEE CONSTRUCTION PLANS

PEA GRAVEL DIAPHRAGM; SEE CONSTRUCTION PLANS

CONCRETE UNIT PAVER - TYPE 2

SPECIAL CONCRETE SKATEBOARD PUMP TRACK PATH WITH EMBEDS

CONST BL

CONTINUED ON SHEET NO. 94

CONTINUED ON SHEET NO. 96

N/F
BERNARDO PENA
BK/PG 6873/44
10 BROADWAY
PL 3415
144–5

N/F
MASSACHUSETTS BAY TRANSPORTATION AUTHORITY
BK/PG 1299/162
CANAL STREET
144–4

N/F
GREGORY REALTY TRUST
BK/PG 6479/193
14 BROADWAY
PL 1919
144–6

N/F
18–20 BROADWAY, LLC
BK/PG 10906/92
20 BROADWAY
144–8

N/F
CRISTIAN RIVAS
BK/PG 14751/181
598 ESSEX ST
144–13

N/F
BROADWAYCANAL–1 LLC
BK/PG 16328/128
3 BROADWAY
144–24

N/F
18–20 BROADWAY, LLC
BK/PG 10927/25
20 BROADWAY
144–9

BROADWAY - ROUTE 28
(PUBLIC)

1898 COUNTY LAYOUT

BK/PG 929/394
600A ESSEX ST
PL 4146
144–15

RR VAL MAP SEC. 7.4–1

0 20 50 100

SCALE: 1" = 20'

FOR PERMITTING PURPOSES - NOT FOR CONSTRUCTION

LANDSCAPE_SHEETS.DWG Plotted on 28-Oct-2022 12:07 PM

LIMIT OF WORK
TEMPORARY EASEMENT LINE

NAD 83

PLANTING LEGEND

- EXISTING TREE TO REMAIN & TREE PROTECTION
- DECIDUOUS TREE
- FLOWERING TREE
- EVERGREEN TREE
- SHRUB & ORNAMENTAL GRASS PLANTING
- SHORT GRASSLAND MIX
- MID-HEIGHT POLLINATOR MIX
- WETLAND MIX - PART SHADE MIX

GENERAL NOTE:
1. REFER TO PRIOR INVASIVE SPECIES REMOVAL PROGRAM PER CITY

SITE IMPROVEMENT LEGEND

- S1 WEATHERING STEEL VERTICAL GATEWAY ELEMENT
- S2 WEATHERING STEEL SLOPED AND BATTERED WALL WITH WOOD BENCH
- S3 WEATHERING STEEL SLOPED PLANTER WALL
- S4 WEATHERING STEEL SLOPED BENCH WALL
- S5a TRAIL PATH LIGHT
- S5b DECORATIVE COLUMN LIGHT
- S6 TIMBER SEAT STEPS
- S7 STACKED TIMBER SEATING PLATFORM
- S8 SCULPTURAL SWING ELEMENT
- S9 SPECIAL CONCRETE PERFORMANCE PLATFORMS
- S10 SPECIAL CONCRETE SKATEBOARD PUMP TRACK PATH WITH EMBEDS
- S11 SPECIAL CONCRETE SEAT WALL
- S11a SPECIAL CONCRETE SEAT WALL WITH TIMBER SEAT
- S12 SPECIAL CONCRETE SEAT STEPS
- S13 SPECIAL STEPPING STONES
- S14 GAMING TABLE AND CHAIRS
- S14A TABLE AND CHAIRS
- S15 PICNIC TABLE (*HANDICAPPED)
- S16 SITE BENCH
- S17 BIKE RACK
- S18 TRASH RECEPTACLE
- S19 BASKETBALL HOOP ASSEMBLY
- S20 6 FT CHAIN LINK FENCE
- S21 WEATHERING STEEL SCREEN FENCE - TYPE 1
- S22 WEATHERING STEEL SCREEN FENCE - TYPE 2
- S23 NOT USED
- S24 WOODEN SAFETY RAIL
- S25 WOOD RAIL FENCE WITH GUARDRAIL

LAWRENCE
LMRC RAIL TRAIL

STATE	FED. AID PROJ. NO.	SHEET NO.	TOTAL SHEETS
MA	-	96	225
PROJECT FILE NO.	608930		

LANDSCAPE PLAN - 6 OF 16

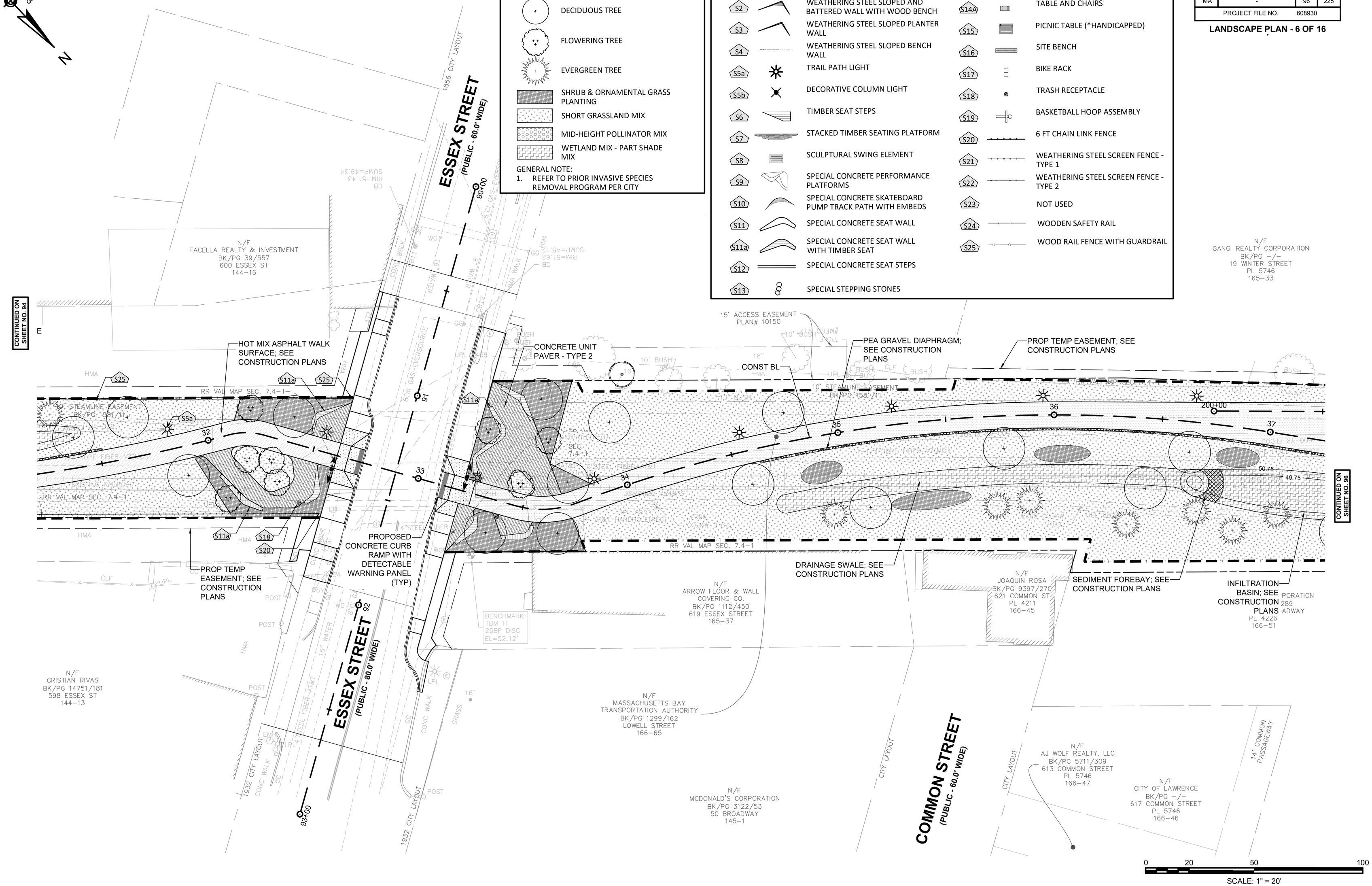

FOR PERMITTING PURPOSES - NOT FOR CONSTRUCTION

LANDSCAPE_SHEETS.DWG Plotted on 28-Oct-2022 12:08 PM

NAD 83

N

LIMIT OF WORK

TEMPORARY EASEMENT LINE

PLANTING LEGEND

- EXISTING TREE TO REMAIN & TREE PROTECTION
- DECIDUOUS TREE
- FLOWERING TREE
- EVERGREEN TREE
- SHRUB & ORNAMENTAL GRASS PLANTING
- SHORT GRASSLAND MIX
- MID-HEIGHT POLLINATOR MIX
- WETLAND MIX - PART SHADE MIX

GENERAL NOTE:
1. REFER TO PRIOR INVASIVE SPECIES REMOVAL PROGRAM PER CITY

SITE IMPROVEMENT LEGEND

- S1 WEATHERING STEEL VERTICAL GATEWAY ELEMENT
- S2 WEATHERING STEEL SLOPED AND BATTERED WALL WITH WOOD BENCH
- S3 WEATHERING STEEL SLOPED PLANTER WALL
- S4 WEATHERING STEEL SLOPED BENCH WALL
- S5a TRAIL PATH LIGHT
- S5b DECORATIVE COLUMN LIGHT
- S6 TIMBER SEAT STEPS
- S7 STACKED TIMBER SEATING PLATFORM
- S8 SCULPTURAL SWING ELEMENT
- S9 SPECIAL CONCRETE PERFORMANCE PLATFORMS
- S10 SPECIAL CONCRETE SKATEBOARD PUMP TRACK PATH WITH EMBEDS
- S11 SPECIAL CONCRETE SEAT WALL
- S11a SPECIAL CONCRETE SEAT WALL WITH TIMBER SEAT
- S12 SPECIAL CONCRETE SEAT STEPS
- S13 SPECIAL STEPPING STONES
- S14 GAMING TABLE AND CHAIRS
- S14A TABLE AND CHAIRS
- S15 PICNIC TABLE (*HANDICAPPED)
- S16 SITE BENCH
- S17 BIKE RACK
- S18 TRASH RECEPTACLE
- S19 BASKETBALL HOOP ASSEMBLY
- S20 6 FT CHAIN LINK FENCE
- S21 WEATHERING STEEL SCREEN FENCE - TYPE 1
- S22 WEATHERING STEEL SCREEN FENCE - TYPE 2
- S23 NOT USED
- S24 WOODEN SAFETY RAIL
- S25 WOOD RAIL FENCE WITH GUARDRAIL

LAWRENCE
LMRC RAIL TRAIL

STATE	FED. AID PROJ. NO.	SHEET NO.	TOTAL SHEETS
MA	-	97	225
PROJECT FILE NO.	608930		

LANDSCAPE PLAN - 7 OF 16

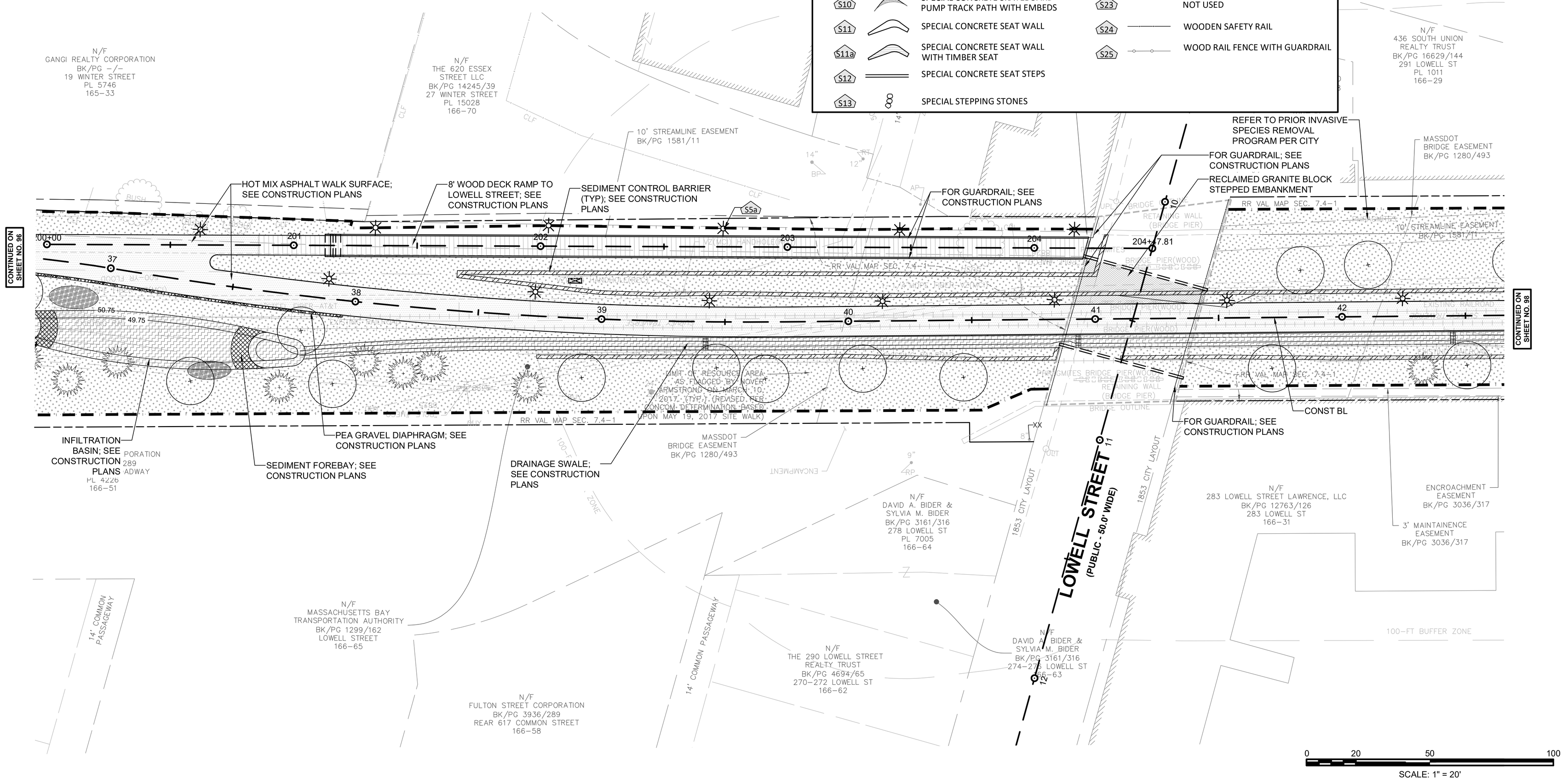

FOR PERMITTING PURPOSES - NOT FOR CONSTRUCTION

LANDSCAPE_SHEETS.DWG Plotted on 28-Oct-2022 12:09 PM

NAD 83

N

LIMIT OF WORK

TEMPORARY EASEMENT LINE

PLANTING LEGEND

- EXISTING TREE TO REMAIN & TREE PROTECTION
- DECIDUOUS TREE
- FLOWERING TREE
- EVERGREEN TREE
- SHRUB & ORNAMENTAL GRASS PLANTING
- SHORT GRASSLAND MIX
- MID-HEIGHT POLLINATOR MIX
- WETLAND MIX - PART SHADE MIX

GENERAL NOTE:

1. REFER TO PRIOR INVASIVE SPECIES REMOVAL PROGRAM PER CITY

SITE IMPROVEMENT LEGEND

- S1 WEATHERING STEEL VERTICAL GATEWAY ELEMENT
- S2 WEATHERING STEEL SLOPED AND BATTERED WALL WITH WOOD BENCH
- S3 WEATHERING STEEL SLOPED PLANTER WALL
- S4 WEATHERING STEEL SLOPED BENCH WALL
- S5a TRAIL PATH LIGHT
- S5b DECORATIVE COLUMN LIGHT
- S6 TIMBER SEAT STEPS
- S7 STACKED TIMBER SEATING PLATFORM
- S8 SCULPTURAL SWING ELEMENT
- S9 SPECIAL CONCRETE PERFORMANCE PLATFORMS
- S10 SPECIAL CONCRETE SKATEBOARD PUMP TRACK PATH WITH EMBEDS
- S11 SPECIAL CONCRETE SEAT WALL
- S11a SPECIAL CONCRETE SEAT WALL WITH TIMBER SEAT
- S12 SPECIAL CONCRETE SEAT STEPS
- S13 SPECIAL STEPPING STONES
- S14 GAMING TABLE AND CHAIRS
- S14A TABLE AND CHAIRS
- S15 PICNIC TABLE (*HANDICAPPED)
- S16 SITE BENCH
- S17 BIKE RACK
- S18 TRASH RECEPTACLE
- S19 BASKETBALL HOOP ASSEMBLY
- S20 6 FT CHAIN LINK FENCE
- S21 WEATHERING STEEL SCREEN FENCE - TYPE 1
- S22 WEATHERING STEEL SCREEN FENCE - TYPE 2
- S23 NOT USED
- S24 WOODEN SAFETY RAIL
- S25 WOOD RAIL FENCE WITH GUARDRAIL

LAWRENCE
LMRC RAIL TRAIL

STATE	FED. AID PROJ. NO.	SHEET NO.	TOTAL SHEETS
MA	-	98	225
PROJECT FILE NO.	608930		

LANDSCAPE PLAN - 8 OF 16

N/F
HECTOR B. CHECO
BK/PG 16108/310
17 MORTON ST
166-21

100-FT BUFFER ZONE

N/F
436 SOUTH UNION REALTY TRUST
BK/PG 16629/144
291 LOWELL ST
PL 1011
166-29

N/F
MASSACHUSETTS BAY TRANSPORTATION AUTHORITY
BK/PG 1299/162
HAVERHILL STREET
167-2

N/F
DAKE, LLC
BK/PG 9501/326
27-31 MORTON ST
PL 4418
166-19

N/F
LAWRENCE HOUSING AUTHORITY
BK/PG -/-
33-47 MORTON ST
166-18

MASSDOT BRIDGE EASEMENT BK/PG 1280/493

REFER TO PRIOR INVASIVE SPECIES REMOVAL PROGRAM PER CITY

SEDIMENT CONTROL BARRIER (TYP); SEE CONSTRUCTION PLANS

HOT MIX ASPHALT WALK SURFACE; SEE CONSTRUCTION PLANS

10' STREAMLINE EASEMENT BK/PG 1581/71

RR VAL MAP SEC. 7.4-1

CONTINUED ON SHEET NO. 97

CONTINUED ON SHEET NO. 99

CONST BL

LIMIT OF RESOURCE AREA AS FLAGGED BY NOVER ARMSTRONG ON MARCH 10, 2017. (TYP.) (REVISED PER CONCOM DETERMINATION BASED UPON MAY 19, 2017 SITE WALK)

DRAINAGE SWALE; SEE CONSTRUCTION PLANS

STONE RETAINING WALL

ENCROACHMENT EASEMENT BK/PG 3036/317

3' MAINTAINENCE EASEMENT BK/PG 3036/317

N/F
283 LOWELL STREET LAWRENCE, LLC
BK/PG 12763/126
283 LOWELL ST
166-31

OLIVER PLACE (PRIVATE)

CLYDE LANE (PRIVATE)

N/F
MONICAH M. MARSH
BK/PG 14131/253
10-14 BRADFORD PLACE
166-40

N/F
CITY OF LAWRENCE
BK/PG 10095/356
8 BRADFORD PLACE
166-41

N/F
5-9 MILL STREET, LLC
BK/PG 15947/238
135 BRADFORD
167-1

0 20 50 100

SCALE: 1" = 20'

FOR PERMITTING PURPOSES - NOT FOR CONSTRUCTION

LANDSCAPE_SHEETS.DWG Plotted on 28-Oct-2022 12:10 PM

NAD 83

N

LIMIT OF WORK

TEMPORARY EASEMENT LINE

PLANTING LEGEND

- EXISTING TREE TO REMAIN & TREE PROTECTION
- DECIDUOUS TREE
- FLOWERING TREE
- EVERGREEN TREE
- SHRUB & ORNAMENTAL GRASS PLANTING
- SHORT GRASSLAND MIX
- MID-HEIGHT POLLINATOR MIX
- WETLAND MIX - PART SHADE MIX

GENERAL NOTE:
1. REFER TO PRIOR INVASIVE SPECIES REMOVAL PROGRAM PER CITY

SITE IMPROVEMENT LEGEND

- S1 WEATHERING STEEL VERTICAL GATEWAY ELEMENT
- S2 WEATHERING STEEL SLOPED AND BATTERED WALL WITH WOOD BENCH
- S3 WEATHERING STEEL SLOPED PLANTER WALL
- S4 WEATHERING STEEL SLOPED BENCH WALL
- S5a TRAIL PATH LIGHT
- S5b DECORATIVE COLUMN LIGHT
- S6 TIMBER SEAT STEPS
- S7 STACKED TIMBER SEATING PLATFORM
- S8 SCULPTURAL SWING ELEMENT
- S9 SPECIAL CONCRETE PERFORMANCE PLATFORMS
- S10 SPECIAL CONCRETE SKATEBOARD PUMP TRACK PATH WITH EMBEDS
- S11 SPECIAL CONCRETE SEAT WALL
- S11a SPECIAL CONCRETE SEAT WALL WITH TIMBER SEAT
- S12 SPECIAL CONCRETE SEAT STEPS
- S13 SPECIAL STEPPING STONES
- S14 GAMING TABLE AND CHAIRS
- S14A TABLE AND CHAIRS
- S15 PICNIC TABLE (*HANDICAPPED)
- S16 SITE BENCH
- S17 BIKE RACK
- S18 TRASH RECEPTACLE
- S19 BASKETBALL HOOP ASSEMBLY
- S20 6 FT CHAIN LINK FENCE
- S21 WEATHERING STEEL SCREEN FENCE - TYPE 1
- S22 WEATHERING STEEL SCREEN FENCE - TYPE 2
- S23 NOT USED
- S24 WOODEN SAFETY RAIL
- S25 WOOD RAIL FENCE WITH GUARDRAIL

LAWRENCE
LMRC RAIL TRAIL

STATE	FED. AID PROJ. NO.	SHEET NO.	TOTAL SHEETS
MA	-	99	225
PROJECT FILE NO.	608930		

LANDSCAPE PLAN - 9 OF 16

MORTON STREET
(PUBLIC - 50.0' WIDE)

HAVERHILL STREET - ROUTE 110
(PUBLIC - 50.0' WIDE)

CITY LAYOUT

4" STEEL FIBER-CITY OF LAWRENCE

100-FT BUFFER ZONE

N/F
LAWRENCE HOUSING AUTHORITY
BK/PG -/-
33-47 MORTON ST
166-18

N/F
COLONY REALTY TRUST
BK/PG 4648/253
13 RAILROAD ST
189-50

N/F
MASSACHUSETTS ELECTRIC COMPANY
BK/PG 1074/21
425 HAVEHILL ST
PL 5594
189-56

N/F
5-9 MILL STREET, LLC
BK/PG 15947/238
135 BRADFORD
167-1

N/F
BERNARDO PENA
BK/PG 6731/168
413-415 HAVERHILL ST
167-3

N/F
LAWRENCE FAMILY DEVELOPMENT AND EDUCATION FUND, INC.
BK/PG 4309/86
32 WEST STREET
189-58

N/F
MASSACHUSETTS BAY TRANSPORTATION AUTHORITY
BK/PG 1299/162
MERRIMACK STREET
212-24

10' STEAMLINE EASEMENT
BK/PG 1581/71

RR VAL MAP SEC. 7.4-2

3' MAINTAINENCE EASEMENT
BK/PG 3036/317

ENCROACHMENT E/
BK/PG 3036/

SEDIMENT CONTROL BARRIER (TYP); SEE CONSTRUCTION PLANS

HOT MIX ASPHALT WALK SURFACE; SEE CONSTRUCTION PLANS

PROP TEMP EASEMENT; SEE CONSTRUCTION PLANS

HOT MIX ASPHALT WALK SURFACE; SEE CONSTRUCTION PLANS

PROPOSED CONCRETE CURB RAMP WITH DETECTABLE WARNING PANEL (TYP)

CONCRETE UNIT PAVER - TYPE 2

DRAINAGE SWALE; SEE CONSTRUCTION PLANS

CONST BL

PEA GRAVEL DIAPHRAGM; SEE CONSTRUCTION PLANS

BIO RETENTION BASIN; SEE CONSTRUCTION PLANS

RAISED LANDSCAPE ISLAND

CONTINUED ON SHEET NO. 98

CONTINUED ON SHEET NO. 100

0 20 50 100

SCALE: 1" = 20'

FOR PERMITTING PURPOSES - NOT FOR CONSTRUCTION

SITE IMPROVEMENT LEGEND

S1	WEATHERING STEEL VERTICAL GATEWAY ELEMENT	S14	GAMING TABLE AND CHAIRS
S2	WEATHERING STEEL SLOPED AND BATTERED WALL WITH WOOD BENCH	S14A	TABLE AND CHAIRS
S3	WEATHERING STEEL SLOPED PLANTER WALL	S15	PICNIC TABLE (*HANDICAPPED)
S4	WEATHERING STEEL SLOPED BENCH WALL	S16	SITE BENCH
S5a	TRAIL PATH LIGHT	S17	BIKE RACK
S5b	DECORATIVE COLUMN LIGHT	S18	TRASH RECEPTACLE
S6	TIMBER SEAT STEPS	S19	BASKETBALL HOOP ASSEMBLY
S7	STACKED TIMBER SEATING PLATFORM	S20	6 FT CHAIN LINK FENCE
S8	SCULPTURAL SWING ELEMENT	S21	WEATHERING STEEL SCREEN FENCE - TYPE 1
S9	SPECIAL CONCRETE PERFORMANCE PLATFORMS	S22	WEATHERING STEEL SCREEN FENCE - TYPE 2
S10	SPECIAL CONCRETE SKATEBOARD PUMP TRACK PATH WITH EMBEDS	S23	NOT USED
S11	SPECIAL CONCRETE SEAT WALL	S24	WOODEN SAFETY RAIL
S11a	SPECIAL CONCRETE SEAT WALL WITH TIMBER SEAT	S25	WOOD RAIL FENCE WITH GUARDRAIL
S12	SPECIAL CONCRETE SEAT STEPS		
S13	SPECIAL STEPPING STONES		

PLANTING LEGEND

- EXISTING TREE TO REMAIN & TREE PROTECTION
- DECIDUOUS TREE
- FLOWERING TREE
- EVERGREEN TREE
- SHRUB & ORNAMENTAL GRASS PLANTING
- SHORT GRASSLAND MIX
- MID-HEIGHT POLLINATOR MIX
- WETLAND MIX - PART SHADE MIX

GENERAL NOTE:
1. REFER TO PRIOR INVASIVE SPECIES REMOVAL PROGRAM PER CITY

LIMIT OF WORK
TEMPORARY EASEMENT LINE

LAWRENCE
LMRC RAIL TRAIL

STATE	FED. AID PROJ. NO.	SHEET NO.	TOTAL SHEETS
MA	-	100	225
PROJECT FILE NO.		608930	

LANDSCAPE PLAN - 10 OF 16

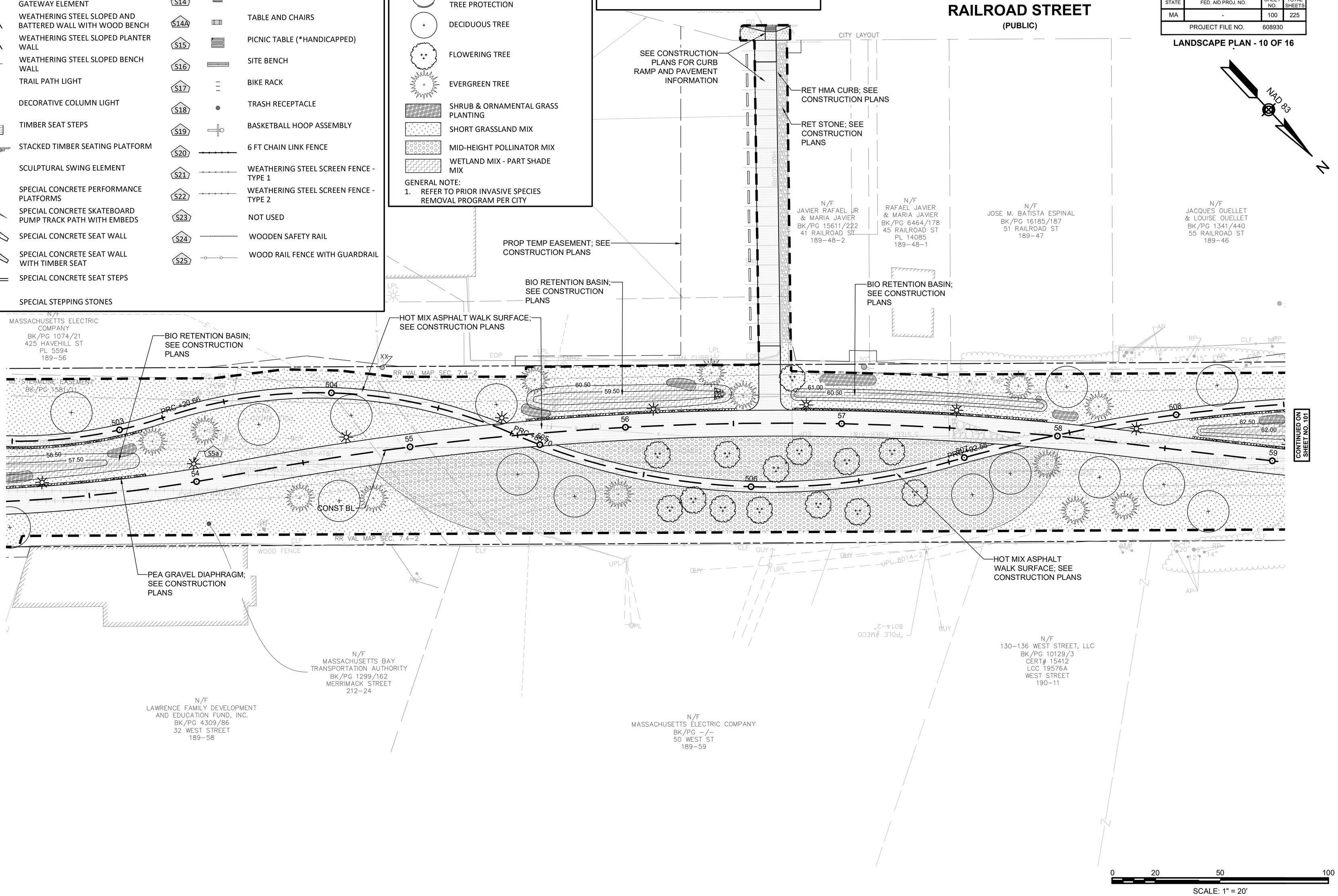

FOR PERMITTING PURPOSES - NOT FOR CONSTRUCTION

LANDSCAPE_SHEETS.DWG Plotted on 28-Oct-2022 12:11 PM

Proposal No. 608930-128034

A00869 - 119

LANDSCAPE_SHEETS.DWG Plotted on 28-Oct-2022 12:12 PM

LIMIT OF WORK

TEMPORARY EASEMENT LINE

PLANTING LEGEND

- EXISTING TREE TO REMAIN & TREE PROTECTION
- DECIDUOUS TREE
- FLOWERING TREE
- EVERGREEN TREE
- SHRUB & ORNAMENTAL GRASS PLANTING
- SHORT GRASSLAND MIX
- MID-HEIGHT POLLINATOR MIX
- WETLAND MIX - PART SHADE MIX

GENERAL NOTE:

1. REFER TO PRIOR INVASIVE SPECIES REMOVAL PROGRAM PER CITY

SITE IMPROVEMENT LEGEND

- S1 WEATHERING STEEL VERTICAL GATEWAY ELEMENT
- S2 WEATHERING STEEL SLOPED AND BATTERED WALL WITH WOOD BENCH
- S3 WEATHERING STEEL SLOPED PLANTER WALL
- S4 WEATHERING STEEL SLOPED BENCH WALL
- S5a TRAIL PATH LIGHT
- S5b DECORATIVE COLUMN LIGHT
- S6 TIMBER SEAT STEPS
- S7 STACKED TIMBER SEATING PLATFORM
- S8 SCULPTURAL SWING ELEMENT
- S9 SPECIAL CONCRETE PERFORMANCE PLATFORMS
- S10 SPECIAL CONCRETE SKATEBOARD PUMP TRACK PATH WITH EMBEDS
- S11 SPECIAL CONCRETE SEAT WALL
- S11a SPECIAL CONCRETE SEAT WALL WITH TIMBER SEAT
- S12 SPECIAL CONCRETE SEAT STEPS
- S13 SPECIAL STEPPING STONES
- S14 GAMING TABLE AND CHAIRS
- S14A TABLE AND CHAIRS
- S15 PICNIC TABLE (*HANDICAPPED)
- S16 SITE BENCH
- S17 BIKE RACK
- S18 TRASH RECEPTACLE
- S19 BASKETBALL HOOP ASSEMBLY
- S20 6 FT CHAIN LINK FENCE
- S21 WEATHERING STEEL SCREEN FENCE - TYPE 1
- S22 WEATHERING STEEL SCREEN FENCE - TYPE 2
- S23 NOT USED
- S24 WOODEN SAFETY RAIL
- S25 WOOD RAIL FENCE WITH GUARDRAIL

LAWRENCE
LMRC RAIL TRAIL

STATE	FED. AID PROJ. NO.	SHEET NO.	TOTAL SHEETS
MA	-	101	225
PROJECT FILE NO.	608930		

LANDSCAPE PLAN - 11 OF 16

NAD 83

N

CITY LAYOUT

N/F
57-71 RAILROAD STREET
CONDOMINIUM
MASTER DEED
BK/PG 3301/42
57-71 RAILROAD STREET
189-1

N/F
JOHN SHEA CO
BK/PG -/-
RAILROAD STREET
189-44

N/F
JACQUES OUELLET
& LOUISE OUELLET
BK/PG 1341/440
55 RAILROAD ST
189-46

N/F
MASSACHUSETTS BA
TRANSPORTATION AUTHO
BK/PG 1299/162
MERRIMACK STREET
212-24

N/F
OBIPIO ORTEGA GON
& LOURDES ORTE
BK/PG 16437/5
81 RAILROAD ST
190-8

N/F
LUZ M. ANDUJAR &
CRITIAN MANUEL GARCIA
BK/PG 10051/321
97 ½ RAILROAD ST
190-3-2

HOT MIX ASPHALT WALK SURFACE; SEE CONSTRUCTION PLANS

BIO RETENTION BASIN; SEE CONSTRUCTION PLANS

PEA GRAVEL DIAPHRAGM; SEE CONSTRUCTION PLANS

HOT MIX ASPHALT WALK SURFACE; SEE CONSTRUCTION PLANS

BIO RETENTION BASIN; SEE CONSTRUCTION PLANS

RR VAL MAP SEC 7.4-2

EL=65.58'

TREELINE(TYP.)

10d

CLF

RP

PS

44"

19"

12"

15"

24"

20"

14"

EASEMENT LINE EASEMENT
BK/PG 1581/11

509

510

511

512

513

508

59

60

61

62

63

64

PRC +25.54

PRC +50.42

62.50

62.00

63.50

64.50

65.50

65.00

S5a

S12

S13

S14

S14A

S18

CONTINUED ON SHEET NO.100

CONTINUED ON SHEET NO. 102

CONST BL

BIO RETENTION BASIN; SEE CONSTRUCTION PLANS

HOT MIX ASPHALT WALK SURFACE; SEE CONSTRUCTION PLANS

CONCRETE UNIT PAVER - TYPE 2

N/F
130-136 WEST STREET, LLC
CERT# 15412
WEST STREET
190-15

N/F
JE ENTERPRISE INC.
BK/PG 15389/123
142 WEST STREET
190-17

N/F
CITY OF LAWRENCE
(SERGEANT LUCIEN E. BOURGOIN SQUARE PARK)
BK/PG 581/323
BK/PG 650/548
WEST STREET
190-18

1945 CITY LAYOUT

HUBBARD PLACE (PUBLIC)

GRASS

POST

SURFACE TRAVERSE

0 20 50 100

SCALE: 1" = 20'

FOR PERMITTING PURPOSES - NOT FOR CONSTRUCTION

LANDSCAPE_SHEETS.DWG Plotted on 28-Oct-2022 12:13 PM

LAWRENCE
LMRC RAIL TRAIL

STATE	FED. AID PROJ. NO.	SHEET NO.	TOTAL SHEETS
MA	-	102	225
	PROJECT FILE NO. 608930		

LANDSCAPE PLAN - 12 OF 16

NAD 83

SITE IMPROVEMENT LEGEND

S1	○	WEATHERING STEEL VERTICAL GATEWAY ELEMENT
S2		WEATHERING STEEL SLOPED AND BATTERED WALL WITH WOOD BENCH
S3		WEATHERING STEEL SLOPED PLANTER WALL
S4		WEATHERING STEEL SLOPED BENCH WALL
S5a	✳	TRAIL PATH LIGHT
S5b	✳	DECORATIVE COLUMN LIGHT
S6		TIMBER SEAT STEPS
S7		STACKED TIMBER SEATING PLATFORM
S8		SCULPTURAL SWING ELEMENT
S9		SPECIAL CONCRETE PERFORMANCE PLATFORMS
S10		SPECIAL CONCRETE SKATEBOARD PUMP TRACK PATH WITH EMBEDS
S11		SPECIAL CONCRETE SEAT WALL
S11a		SPECIAL CONCRETE SEAT WALL WITH TIMBER SEAT
S12		SPECIAL CONCRETE SEAT STEPS
S13		SPECIAL STEPPING STONES
S14		GAMING TABLE AND CHAIRS
S14A		TABLE AND CHAIRS
S15		PICNIC TABLE (*HANDICAPPED)
S16		SITE BENCH
S17		BIKE RACK
S18		TRASH RECEPTACLE
S19		BASKETBALL HOOP ASSEMBLY
S20		6 FT CHAIN LINK FENCE
S21		WEATHERING STEEL SCREEN FENCE - TYPE 1
S22		WEATHERING STEEL SCREEN FENCE - TYPE 2
S23		NOT USED
S24		WOODEN SAFETY RAIL
S25		WOOD RAIL FENCE WITH GUARDRAIL

PLANTING LEGEND

- EXISTING TREE TO REMAIN & TREE PROTECTION
- DECIDUOUS TREE
- FLOWERING TREE
- EVERGREEN TREE
- SHRUB & ORNAMENTAL GRASS PLANTING
- SHORT GRASSLAND MIX
- MID-HEIGHT POLLINATOR MIX
- WETLAND MIX - PART SHADE MIX

GENERAL NOTE:
1. REFER TO PRIOR INVASIVE SPECIES REMOVAL PROGRAM PER CITY

- LIMIT OF WORK
- TEMPORARY EASEMENT LINE

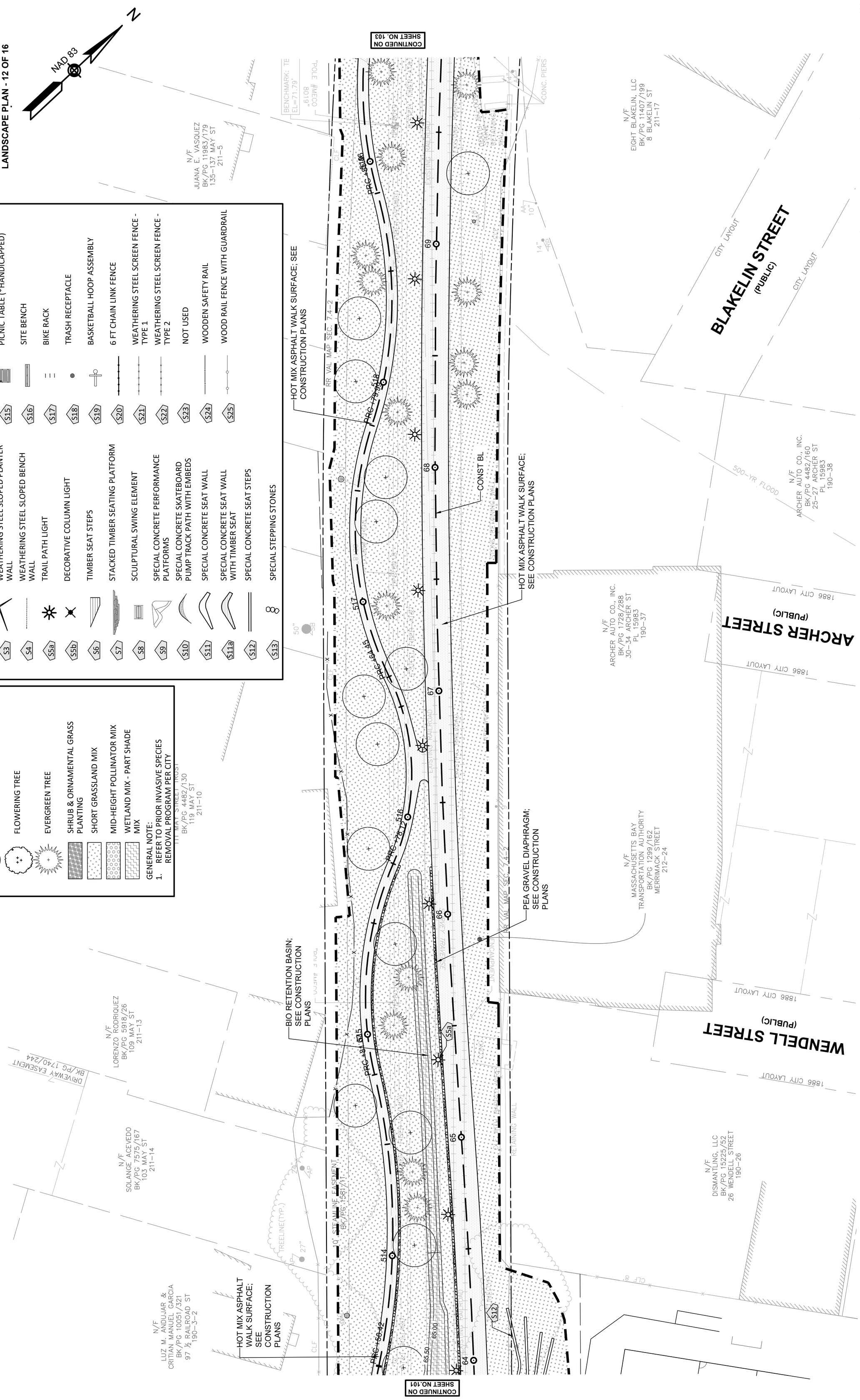

FOR PERMITTING PURPOSES - NOT FOR CONSTRUCTION

LANDSCAPE_SHEETS.DWG Plotted on 28-Oct-2022 12:14 PM

LIMIT OF WORK

TEMPORARY EASEMENT LINE

LAWRENCE
LMRC RAIL TRAIL

STATE	FED. AID PROJ. NO.	SHEET NO.	TOTAL SHEETS
MA	-	103	225
PROJECT FILE NO.	608930		

LANDSCAPE PLAN - 13 OF 16

NAD 83

N

MAY STREET (PUBLIC)

MANCHESTER STREET (PUBLIC - 50.0' WIDE)

MANCHESTER STREET

1855 CITY LAYOUT

1894 CITY LAYOUT

30' PRIVATE WAY

N/F
AA REAL ESTATE GROUP LLC
BK/PG 17290/6
139–143 MAY ST
211–4

N/F
ANTONIO A. RAMOS JR
& ELIZABETH A. LOPEZ
BK/PG 11798/140
149 MAY ST
211–3

N/F
OSAGIE MATTHEW
BK/PG 16477/92
151–153 MAY ST
212–28

N/F
CAROLINA FLORES
BK/PG 16467/190
157 MAY ST
212–27

N/F
CARMEN UBILEZ
BK/PG 13463/161
161–163 MAY ST
212–26

N/F
ROBINSON DEJESUS
& RAQUEL CEPEDA
BK/PG 15145/206
167 MAY ST
212–25

N/F
EIGHT BLAKELIN, LLC
BK/PG 11407/199
8 BLAKELIN ST
211–17

N/F
MASSACHUSETTS BAY
TRANSPORTATION AUTHORITY
BK/PG 1299/162
MERRIMACK STREET
211–24

N/F
ROGER A. FARAH
BK/PG 9768/57
80 MANCHESTER ST
PL 6921, PL 13776
212–22

N/F
N & J PROPERTIES LLC
BK/PG 16176/231
74–76 MANCHESTER ST
212–21

N/F
CITY OF LAWRENCE
BK/PG 15166/315
85 MANCHESTER ST
212–3–1

N/F
ALFREDO GIVSEPPI BIAJOLI
& ROBERTA P. BIAJOLI
BK/PG 17023/98
60–70 MANCHESTER ST
212–20

N/F
REYES LLC
BK/PG 15337/183
75 MANCHESTER ST
212–4

18–20 BLAKELIN ST
212–19

PROP TEMP EASEMENT; SEE CONSTRUCTION PLANS

HOT MIX ASPHALT WALK SURFACE; SEE CONSTRUCTION PLANS

BIO RETENTION BASIN; SEE CONSTRUCTION PLANS

PEA GRAVEL DIAPHRAGM; SEE CONSTRUCTION PLANS

CONST BL

HOT MIX ASPHALT WALK SURFACE; SEE CONSTRUCTION PLANS

CURB; SEE CONSTRUCTION PLANS

RETAINING WALL; SEE CONSTRUCTION PLANS

HMA CURB; SEE CONSTRUCTION PLANS

CONTINUED ON SHEET NO. 102

CONTINUED ON SHEET NO. 104

BENCHMARK: TBM D
EL=71.79'

BENCHMARK: FEM C
RIVET IN WALL
EL=71.44'

520+88.51

SITE IMPROVEMENT LEGEND

S1	WEATHERING STEEL VERTICAL GATEWAY ELEMENT	S14	GAMING TABLE AND CHAIRS
S2	WEATHERING STEEL SLOPED AND BATTERED WALL WITH WOOD BENCH	S14A	TABLE AND CHAIRS
S3	WEATHERING STEEL SLOPED PLANTER WALL	S15	PICNIC TABLE (*HANDICAPPED)
S4	WEATHERING STEEL SLOPED BENCH WALL	S16	SITE BENCH
S5a	TRAIL PATH LIGHT	S17	BIKE RACK
S5b	DECORATIVE COLUMN LIGHT	S18	TRASH RECEPTACLE
S6	TIMBER SEAT STEPS	S19	BASKETBALL HOOP ASSEMBLY
S7	STACKED TIMBER SEATING PLATFORM	S20	6 FT CHAIN LINK FENCE
S8	SCULPTURAL SWING ELEMENT	S21	WEATHERING STEEL SCREEN FENCE - TYPE 1
S9	SPECIAL CONCRETE PERFORMANCE PLATFORMS	S22	WEATHERING STEEL SCREEN FENCE - TYPE 2
S10	SPECIAL CONCRETE SKATEBOARD PUMP TRACK PATH WITH EMBEDS	S23	NOT USED
S11	SPECIAL CONCRETE SEAT WALL	S24	WOODEN SAFETY RAIL
S11a	SPECIAL CONCRETE SEAT WALL WITH TIMBER SEAT	S25	WOOD RAIL FENCE WITH GUARDRAIL
S12	SPECIAL CONCRETE SEAT STEPS		
S13	SPECIAL STEPPING STONES		

PLANTING LEGEND

- EXISTING TREE TO REMAIN & TREE PROTECTION
- DECIDUOUS TREE
- FLOWERING TREE
- EVERGREEN TREE
- SHRUB & ORNAMENTAL GRASS PLANTING
- SHORT GRASSLAND MIX
- MID-HEIGHT POLLINATOR MIX
- WETLAND MIX - PART SHADE MIX

GENERAL NOTE:
1. REFER TO PRIOR INVASIVE SPECIES REMOVAL PROGRAM PER CITY

0 20 50 100

SCALE: 1" = 20'

FOR PERMITTING PURPOSES - NOT FOR CONSTRUCTION

LIMIT OF WORK
TEMPORARY EASEMENT LINE

LAWRENCE
LMRC RAIL TRAIL

STATE	FED. AID PROJ. NO.	SHEET NO.	TOTAL SHEETS
MA	-	104	225
PROJECT FILE NO.	608930		

LANDSCAPE PLAN - 14 OF 16

LANDSCAPE_SHEETS.DWG Plotted on 28-Oct-2022 12:14 PM

BARKER STREET
(PUBLIC)
1867 CITY LAYOUT
1848 CITY LAYOUT
N/F
CITY OF LAWRENCE VETERANS LOT
BK/PG -/-
BARKER ST
212-1

CURRANT HILL ROAD
(PUBLIC)

N/F
IMMACULATE CONCEPTION CEMETERY
BK/PG -/-
BARKER ST
232-2

RETAINING WALL; SEE CONSTRUCTION PLANS

CONTINUED ON SHEET NO. 103

CONTINUED ON SHEET NO.105

CONST BL

HOT MIX ASPHALT WALK SURFACE; SEE CONSTRUCTION PLANS

PROP TEMP EASEMENT; SEE CONSTRUCTION PLANS

RELOCATED EXISTING BENCH; SEE CONSTRUCTION PLANS

CEMENT CONCRETE PAVEMENT

HOT MIX ASPHALT WALK SURFACE; SEE CONSTRUCTION PLANS

N/F
CITY OF LAWRENCE
BK/PG -/-
87 MANCHESTER ST
212-3-3

N/F
THE CITY OF LAWRENCE
BK/PG 11232/152
85A MANCHESTER ST
PL 15922
212-3-2

AREA SUBJECT TO AUL
BK/PG 9906/139

BENCHMARK: TBM B
EL=79.10'

NAD 83

N

0 20 50 100
SCALE: 1" = 20'

SITE IMPROVEMENT LEGEND

S1	WEATHERING STEEL VERTICAL GATEWAY ELEMENT
S2	WEATHERING STEEL SLOPED AND BATTERED WALL WITH WOOD BENCH
S3	WEATHERING STEEL SLOPED PLANTER WALL
S4	WEATHERING STEEL SLOPED BENCH WALL
S5a	TRAIL PATH LIGHT
S5b	DECORATIVE COLUMN LIGHT
S6	TIMBER SEAT STEPS
S7	STACKED TIMBER SEATING PLATFORM
S8	SCULPTURAL SWING ELEMENT
S9	SPECIAL CONCRETE PERFORMANCE PLATFORMS
S10	SPECIAL CONCRETE SKATEBOARD PUMP TRACK PATH WITH EMBEDS
S11	SPECIAL CONCRETE SEAT WALL
S11a	SPECIAL CONCRETE SEAT WALL WITH TIMBER SEAT
S12	SPECIAL CONCRETE SEAT STEPS
S13	SPECIAL STEPPING STONES
S14	GAMING TABLE AND CHAIRS
S14A	TABLE AND CHAIRS
S15	PICNIC TABLE (*HANDICAPPED)
S16	SITE BENCH
S17	BIKE RACK
S18	TRASH RECEPTACLE
S19	BASKETBALL HOOP ASSEMBLY
S20	6 FT CHAIN LINK FENCE
S21	WEATHERING STEEL SCREEN FENCE - TYPE 1
S22	WEATHERING STEEL SCREEN FENCE - TYPE 2
S23	NOT USED
S24	WOODEN SAFETY RAIL
S25	WOOD RAIL FENCE WITH GUARDRAIL

PLANTING LEGEND

- EXISTING TREE TO REMAIN & TREE PROTECTION
- DECIDUOUS TREE
- FLOWERING TREE
- EVERGREEN TREE
- SHRUB & ORNAMENTAL GRASS PLANTING
- SHORT GRASSLAND MIX
- MID-HEIGHT POLLINATOR MIX
- WETLAND MIX - PART SHADE MIX

GENERAL NOTE:
1. REFER TO PRIOR INVASIVE SPECIES REMOVAL PROGRAM PER CITY

FOR PERMITTING PURPOSES - NOT FOR CONSTRUCTION

LIMIT OF WORK

TEMPORARY EASEMENT LINE

LAWRENCE
LMRC RAIL TRAIL

STATE	FED. AID PROJ. NO.	SHEET NO.	TOTAL SHEETS
MA	-	105	225
PROJECT FILE NO.	608930		

LANDSCAPE PLAN - 15 OF 16

NAD 83

N

CONTINUED ON SHEET NO. 104

CONTINUED ON SHEET NO. 106

CURRANT HILL ROAD
(PUBLIC)

1848 CITY LAYOUT

RR VAL MAP SEC. 7.4-2

HOT MIX ASPHALT WALK SURFACE; SEE CONSTRUCTION PLANS

CONST BL

RELOCATED EXISTING BENCH; SEE CONSTRUCTION PLANS

N/F
MASSACHUSETTS BAY TRANSPORTATION AUTHORITY
BK/PG 1299/162
MERRIMACK STREET
212-2

PROP PERM EASEMENT; SEE CONSTRUCTION PLANS

PROP TEMP EASEMENT; SEE CONSTRUCTION PLANS

HOT MIX ASPHALT WALK SURFACE; SEE CONSTRUCTION PLANS

GRAVEL WALK SURFACE; SEE CONSTRUCTION PLANS

CEMENT CONCRETE PAVEMENT

HOT MIX ASPHALT WALK SURFACE; SEE CONSTRUCTION PLANS

EROSION CONTROL; SEE CONSTRUCTION PLANS

LIMIT OF RESOURCE AREA AS FLAGGED BY NOVER ARMSTRONG ON MARCH 10, 2017. (TYP.)

25-FT RFA

100-FT BUFFER ZONE

EDGE OF WATER

TREELINE(TYP.)

1-1/4"HDPE FIBER-VZ(MCI)

SITE IMPROVEMENT LEGEND

S1	WEATHERING STEEL VERTICAL GATEWAY ELEMENT
S2	WEATHERING STEEL SLOPED AND BATTERED WALL WITH WOOD BENCH
S3	WEATHERING STEEL SLOPED PLANTER WALL
S4	WEATHERING STEEL SLOPED BENCH WALL
S5a	TRAIL PATH LIGHT
S5b	DECORATIVE COLUMN LIGHT
S6	TIMBER SEAT STEPS
S7	STACKED TIMBER SEATING PLATFORM
S8	SCULPTURAL SWING ELEMENT
S9	SPECIAL CONCRETE PERFORMANCE PLATFORMS
S10	SPECIAL CONCRETE SKATEBOARD PUMP TRACK PATH WITH EMBEDS
S11	SPECIAL CONCRETE SEAT WALL
S11a	SPECIAL CONCRETE SEAT WALL WITH TIMBER SEAT
S12	SPECIAL CONCRETE SEAT STEPS
S13	SPECIAL STEPPING STONES
S14	GAMING TABLE AND CHAIRS
S14A	TABLE AND CHAIRS
S15	PICNIC TABLE (*HANDICAPPED)
S16	SITE BENCH
S17	BIKE RACK
S18	TRASH RECEPTACLE
S19	BASKETBALL HOOP ASSEMBLY
S20	6 FT CHAIN LINK FENCE
S21	WEATHERING STEEL SCREEN FENCE - TYPE 1
S22	WEATHERING STEEL SCREEN FENCE - TYPE 2
S23	NOT USED
S24	WOODEN SAFETY RAIL
S25	WOOD RAIL FENCE WITH GUARDRAIL

PLANTING LEGEND

- EXISTING TREE TO REMAIN & TREE PROTECTION
- DECIDUOUS TREE
- FLOWERING TREE
- EVERGREEN TREE
- SHRUB & ORNAMENTAL GRASS PLANTING
- SHORT GRASSLAND MIX
- MID-HEIGHT POLLINATOR MIX
- WETLAND MIX - PART SHADE MIX

GENERAL NOTE:
1. REFER TO PRIOR INVASIVE SPECIES REMOVAL PROGRAM PER CITY

0 20 50 100

SCALE: 1" = 20'

FOR PERMITTING PURPOSES - NOT FOR CONSTRUCTION

LIMIT OF WORK

TEMPORARY EASEMENT LINE

PLANTING LEGEND

- EXISTING TREE TO REMAIN & TREE PROTECTION
- DECIDUOUS TREE
- FLOWERING TREE
- EVERGREEN TREE
- SHRUB & ORNAMENTAL GRASS PLANTING
- SHORT GRASSLAND MIX
- MID-HEIGHT POLLINATOR MIX
- WETLAND MIX - PART SHADE MIX

GENERAL NOTE:
1. REFER TO PRIOR INVASIVE SPECIES REMOVAL PROGRAM PER CITY

SITE IMPROVEMENT LEGEND

S1	WEATHERING STEEL VERTICAL GATEWAY ELEMENT
S2	WEATHERING STEEL SLOPED AND BATTERED WALL WITH WOOD BENCH
S3	WEATHERING STEEL SLOPED PLANTER WALL
S4	WEATHERING STEEL SLOPED BENCH WALL
S5a	TRAIL PATH LIGHT
S5b	DECORATIVE COLUMN LIGHT
S6	TIMBER SEAT STEPS
S7	STACKED TIMBER SEATING PLATFORM
S8	SCULPTURAL SWING ELEMENT
S9	SPECIAL CONCRETE PERFORMANCE PLATFORMS
S10	SPECIAL CONCRETE SKATEBOARD PUMP TRACK PATH WITH EMBEDS
S11	SPECIAL CONCRETE SEAT WALL
S11a	SPECIAL CONCRETE SEAT WALL WITH TIMBER SEAT
S12	SPECIAL CONCRETE SEAT STEPS
S13	SPECIAL STEPPING STONES
S14	GAMING TABLE AND CHAIRS
S14A	TABLE AND CHAIRS
S15	PICNIC TABLE (*HANDICAPPED)
S16	SITE BENCH
S17	BIKE RACK
S18	TRASH RECEPTACLE
S19	BASKETBALL HOOP ASSEMBLY
S20	6 FT CHAIN LINK FENCE
S21	WEATHERING STEEL SCREEN FENCE - TYPE 1
S22	WEATHERING STEEL SCREEN FENCE - TYPE 2
S23	NOT USED
S24	WOODEN SAFETY RAIL
S25	WOOD RAIL FENCE WITH GUARDRAIL

LAWRENCE
LMRC RAIL TRAIL

STATE	FED. AID PROJ. NO.	SHEET NO.	TOTAL SHEETS
MA	-	106	225
PROJECT FILE NO.	608930		

LANDSCAPE PLAN - 16 OF 16

NAD 83

N

CURRANT HILL ROAD (PUBLIC)

CONTINUED ON SHEET NO. 105

1-1/4"HDPE FIBER-VZ(MCI)

GRAVEL PATH

EHH

VZ(MCI) HANDHOLE(REC)

86

87

88

89+00

GRAVEL WALK SURFACE; SEE CONSTRUCTION PLANS

AT&T HANDHOLE(REC)

BENCHMARK: TBM A EL=85.83'

N/F MASSACHUSETTS BAY TRANSPORTATION AUTHORITY BK/PG 1299/162 MERRIMACK STREET 212-2

25-FT RFA

TREELINE(TYP.)

100-YR FLOODWAY

EDGE OF WATER

100-FT BUFFER ZONE

LIMIT OF RESOURCE AREA AS FLAGGED BY NOVER ARMSTRONG ON MARCH 10, 2017. (TYP.)

~CITY OF LAWRENCE~
~CITY OF METHUEN~

RR VAL MAP SEC. 7.4-2

CONST BL

HOT MIX ASPHALT WALK SURFACE; SEE CONSTRUCTION PLANS

S5a

EROSION CONTROL; SEE CONSTRUCTION PLANS

PROP PERM EASEMENT; SEE CONSTRUCTION PLANS

319+00

0 20 50 100

SCALE: 1" = 20'

FOR PERMITTING PURPOSES - NOT FOR CONSTRUCTION

LANDSCAPE_SHEETS.DWG Plotted on 28-Oct-2022 12:16 PM

Proposal No. 608930-128034

A00869 - 125

LAWRENCE
LMRC RAIL TRAIL

STATE	FED. AID PROJ. NO.	SHEET NO.	TOTAL SHEETS
MA	-	107	225
PROJECT FILE NO.	608930		

LANDSCAPE DETAILS - 1 OF 17

LANDSCAPE_DETAILS.DWG Plotted on 28-Oct-2022 2:37 PM

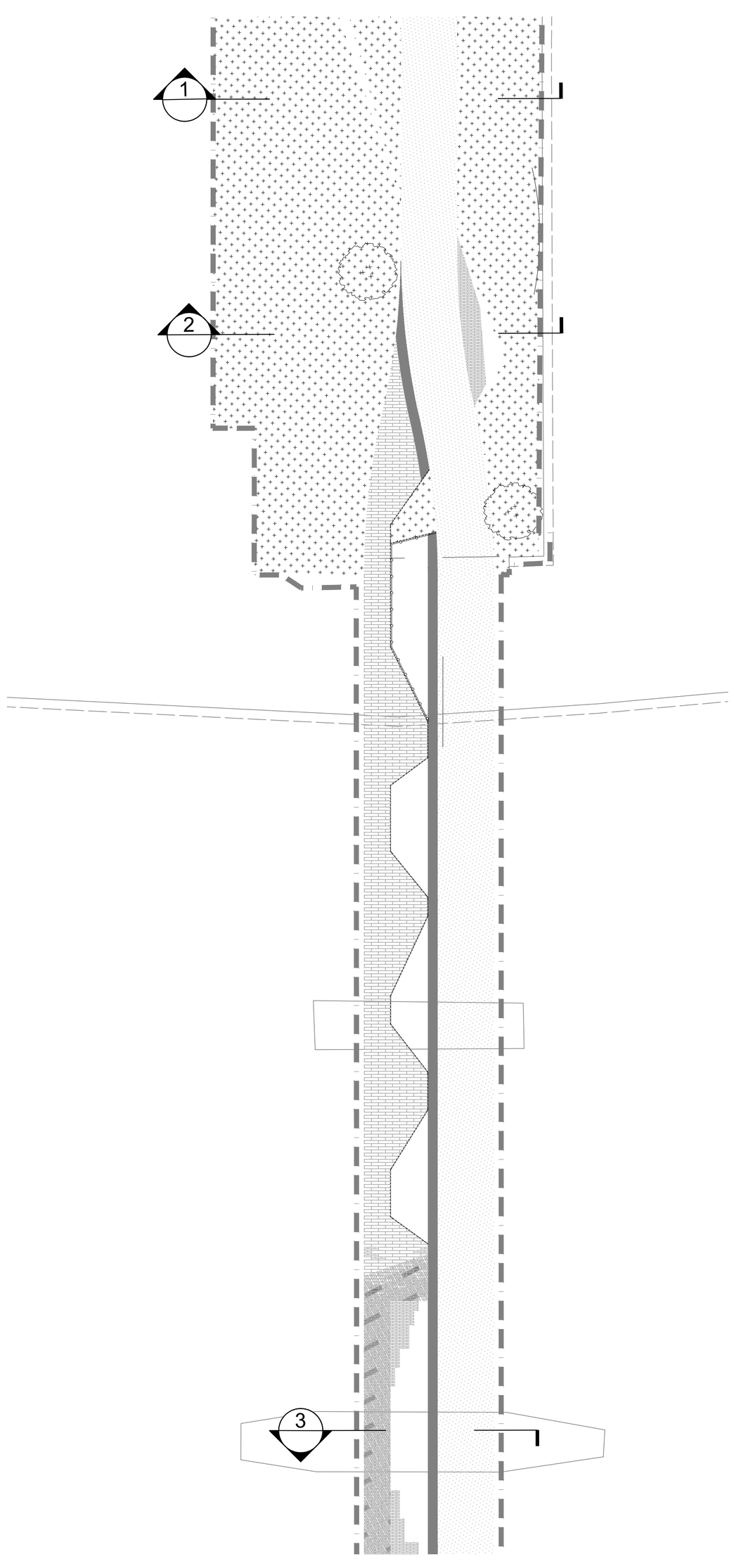

4 KEY PLAN
Scale: 1/16" = 1'-0"

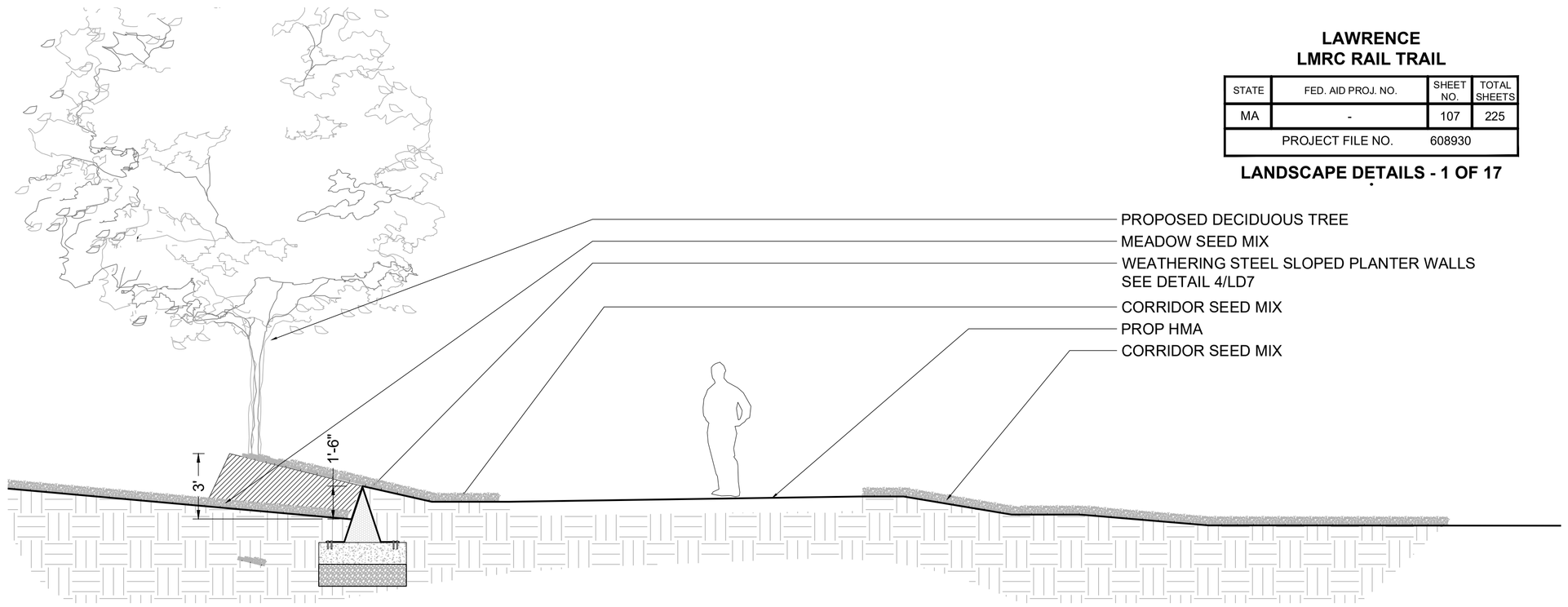

1 MERRIMACK BRIDGE PARK SECTION 1
Scale: 1/4" = 1'-0"

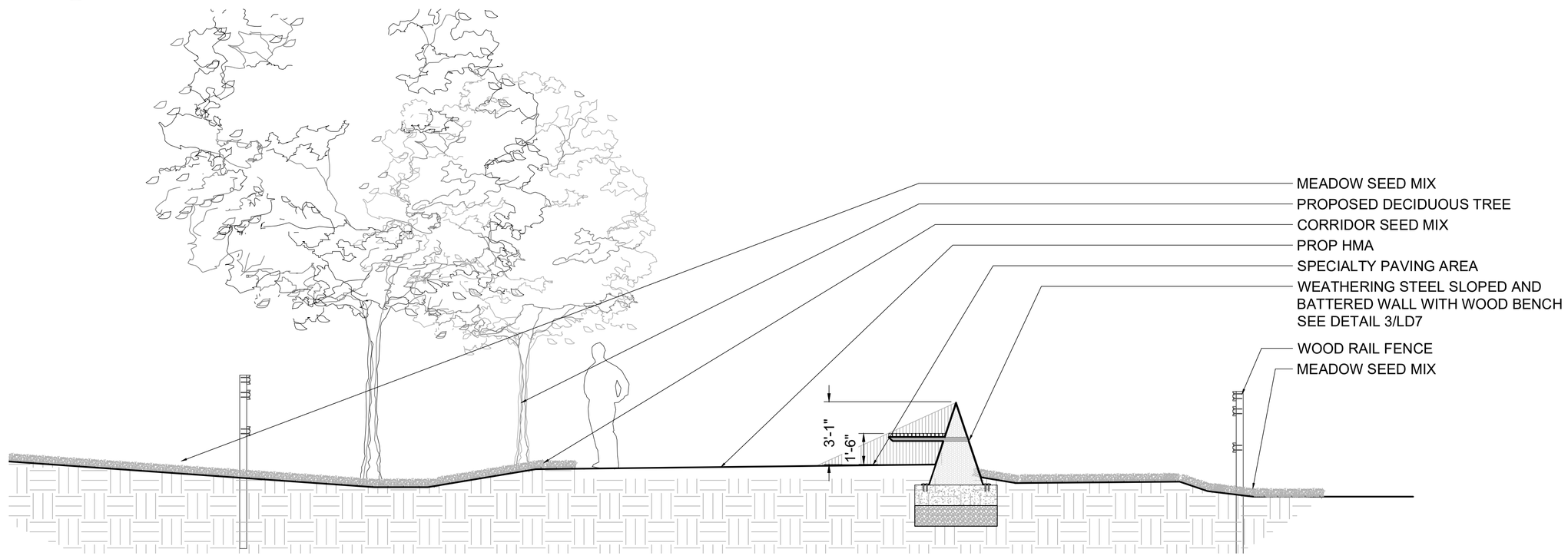

2 MERRIMACK BRIDGE PARK SECTION 2
Scale: 1/4" = 1'-0"

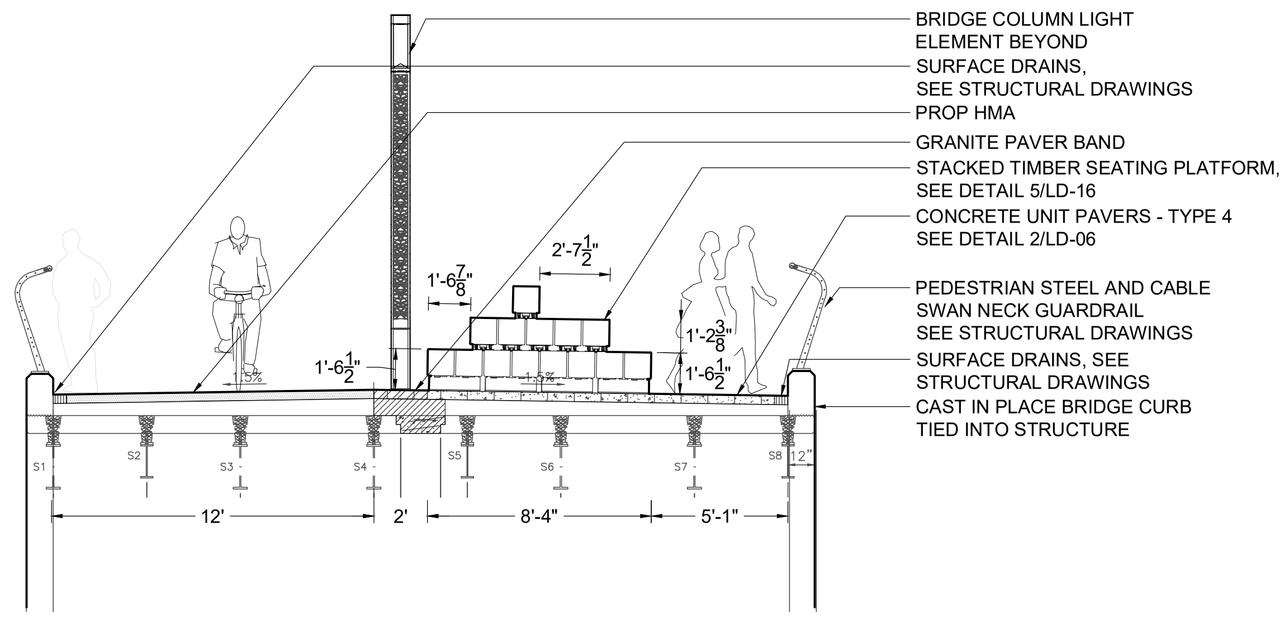

3 MERRIMACK BRIDGE SECTION
Scale: 1/4" = 1'-0"

LANDSCAPE_DETAILS.DWG Plotted on 28-Oct-2022 2:37 PM

LAWRENCE
LMRC RAIL TRAIL

STATE	FED. AID PROJ. NO.	SHEET NO.	TOTAL SHEETS
MA	-	108	225
PROJECT FILE NO.	608930		

LANDSCAPE DETAILS - 2 OF 17

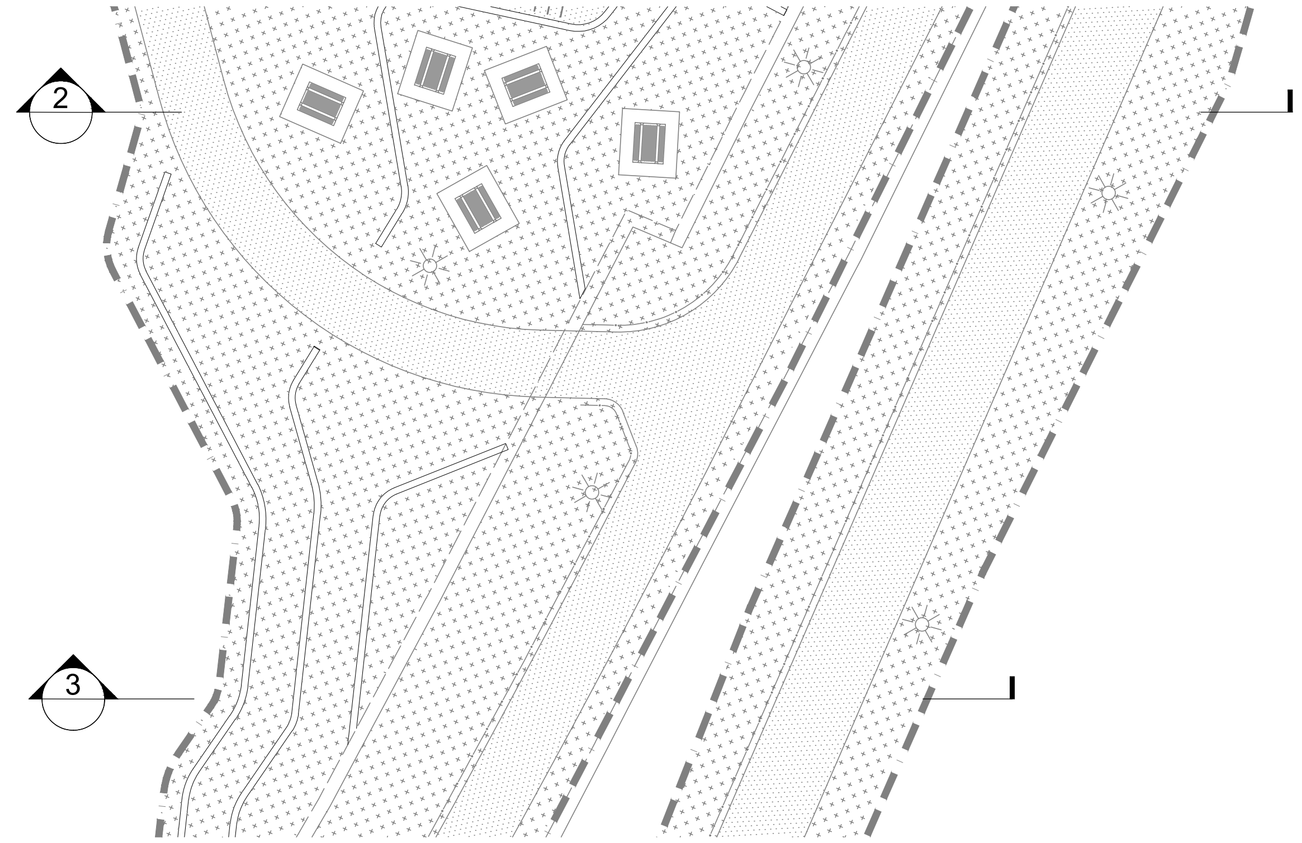

1 SPICKET RIVER STATION PARK SECTION 1
Scale: 1/8" = 1'-0"

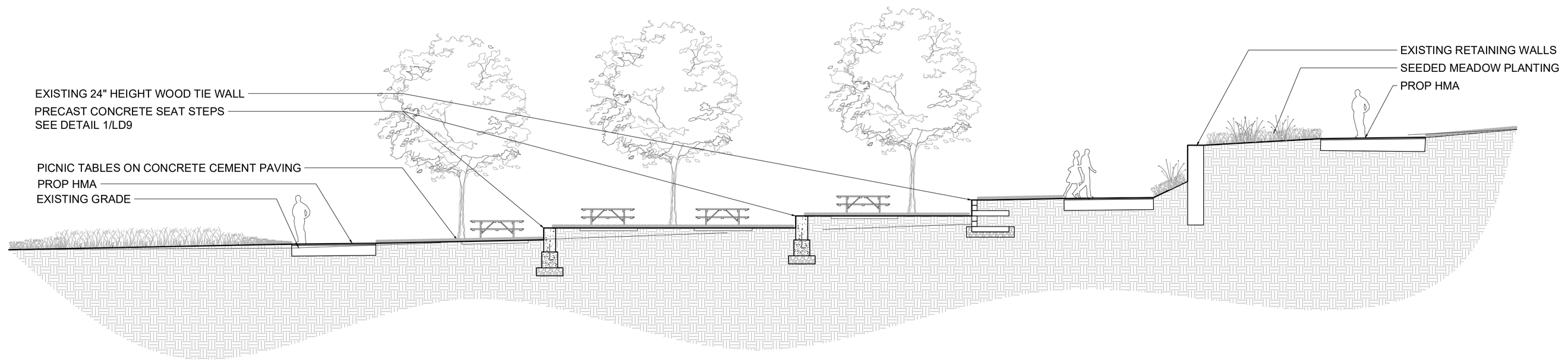

2 SPICKET RIVER STATION PARK SECTION 2
Scale: 1/8" = 1'-0"

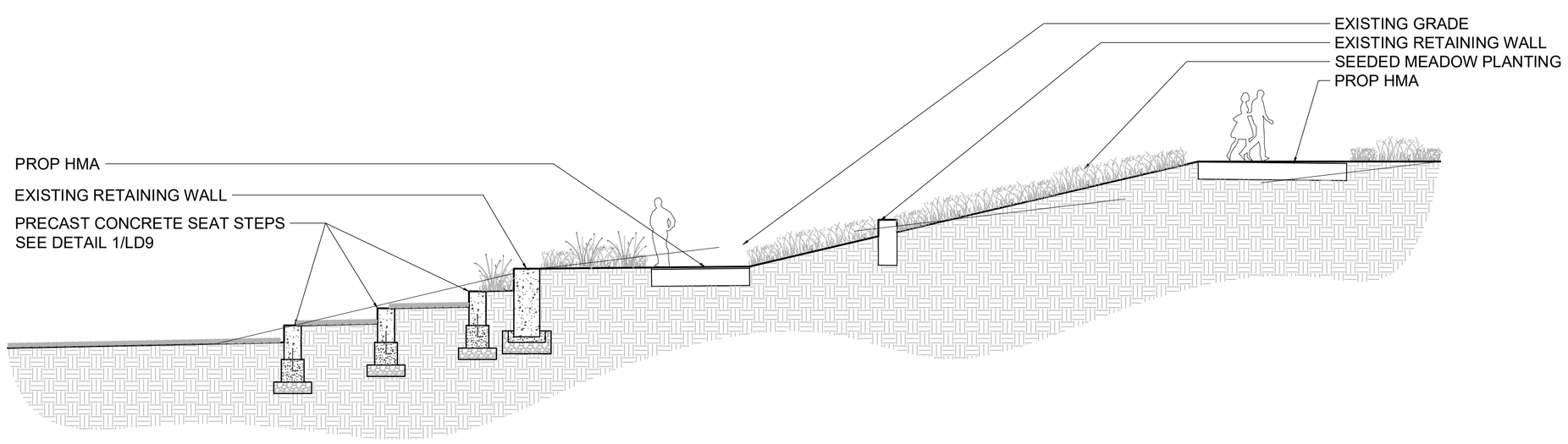

3 SPICKET RIVER STATION PARK SECTION 2
Scale: 1/8" = 1'-0"

LAWRENCE
LMRC RAIL TRAIL

STATE	FED. AID PROJ. NO.	SHEET NO.	TOTAL SHEETS
MA	-	109	225
PROJECT FILE NO.	608930		

LANDSCAPE DETAILS - 3 OF 17

LANDSCAPE_DETAILS.DWG Plotted on 28-Oct-2022 2:43 PM

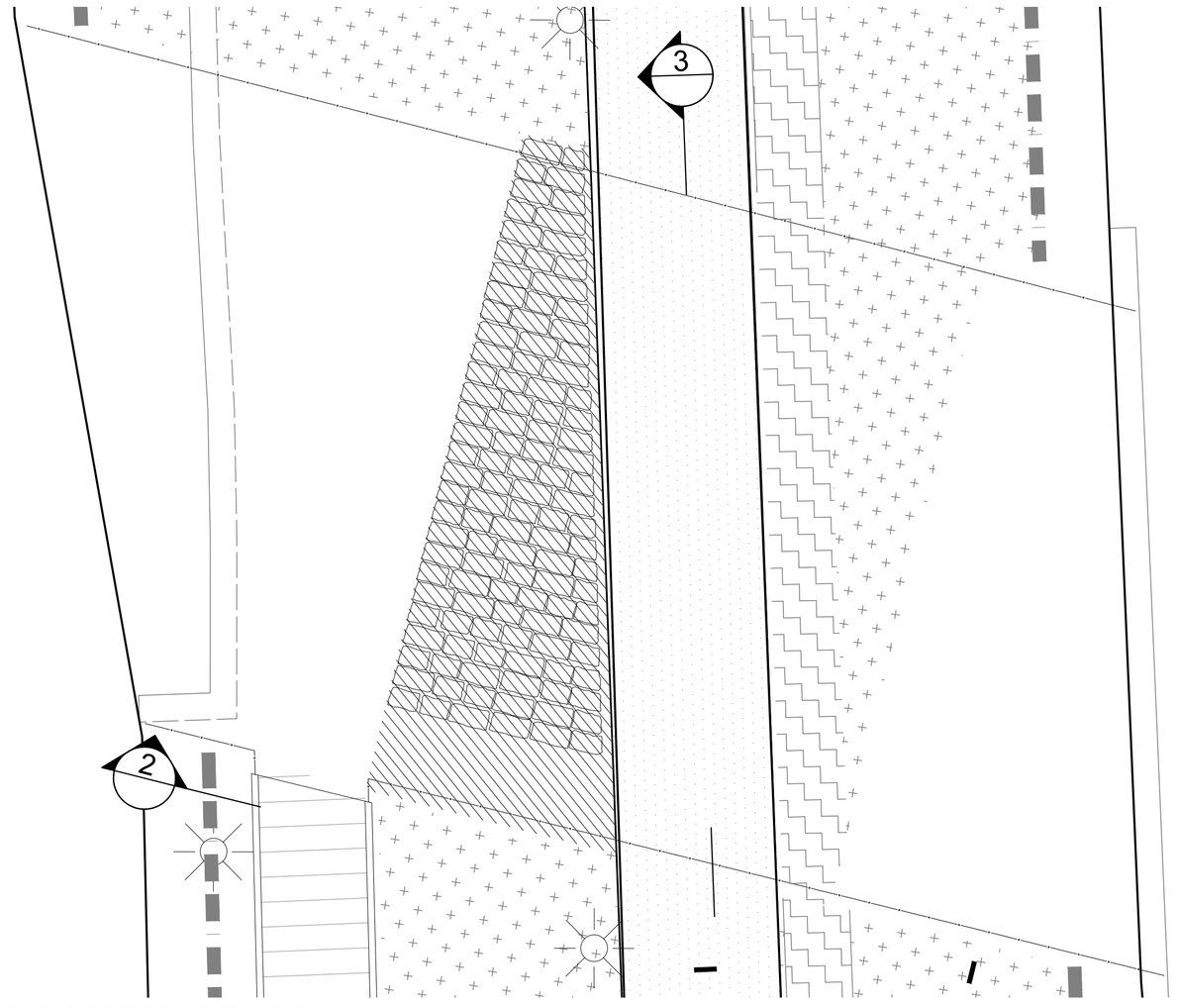

1 LOWELL STREET BRIDGE PLAN
Scale: 1/8" = 1'-0"

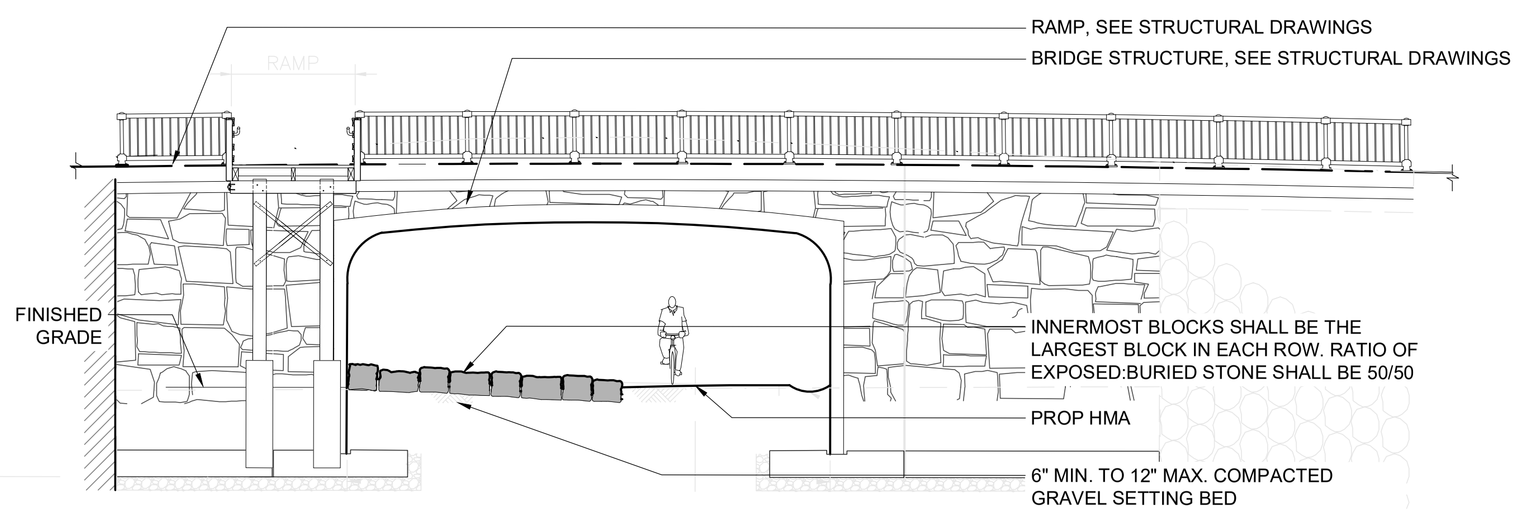

2 LOWELL STREET BRIDGE SECTION
Scale: 1/4" = 1'-0"

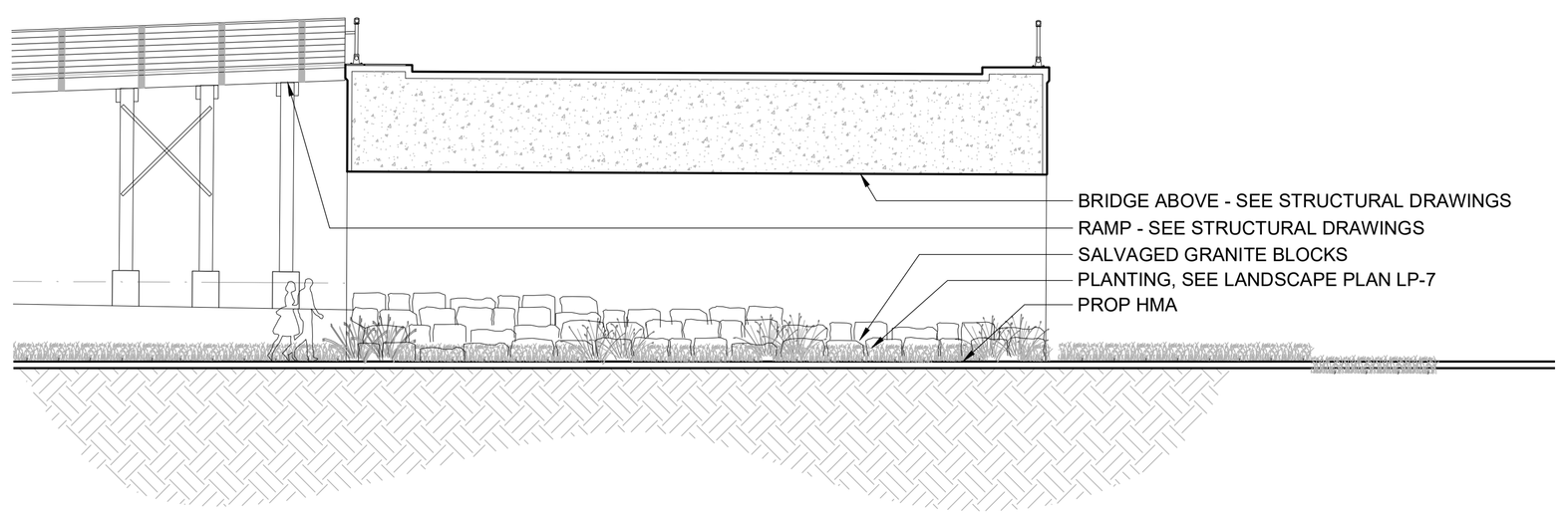

3 LOWELL STREET BRIDGE SECTION
Scale: 1/4" = 1'-0"

FOR PERMITTING PURPOSES - NOT FOR CONSTRUCTION

LANDSCAPE_DETAILS.DWG Plotted on 28-Oct-2022 2:42 PM

LAWRENCE
LMRC RAIL TRAIL

STATE	FED. AID PROJ. NO.	SHEET NO.	TOTAL SHEETS
MA	-	110	225
	PROJECT FILE NO.	608930	

LANDSCAPE DETAILS - 4 OF 17

USED NOT FOR PERMITTING PURPOSES - NOT FOR CONSTRUCTION

LAWRENCE
LMRC RAIL TRAIL

STATE	FED. AID PROJ. NO.	SHEET NO.	TOTAL SHEETS
MA	-	111	225
PROJECT FILE NO.	608930		

LANDSCAPE DETAILS - 5 OF 17

LANDSCAPE_DETAILS.DWG Plotted on 28-Oct-2022 2:45 PM

Proposal No. 608930-128034

A00869 - 130

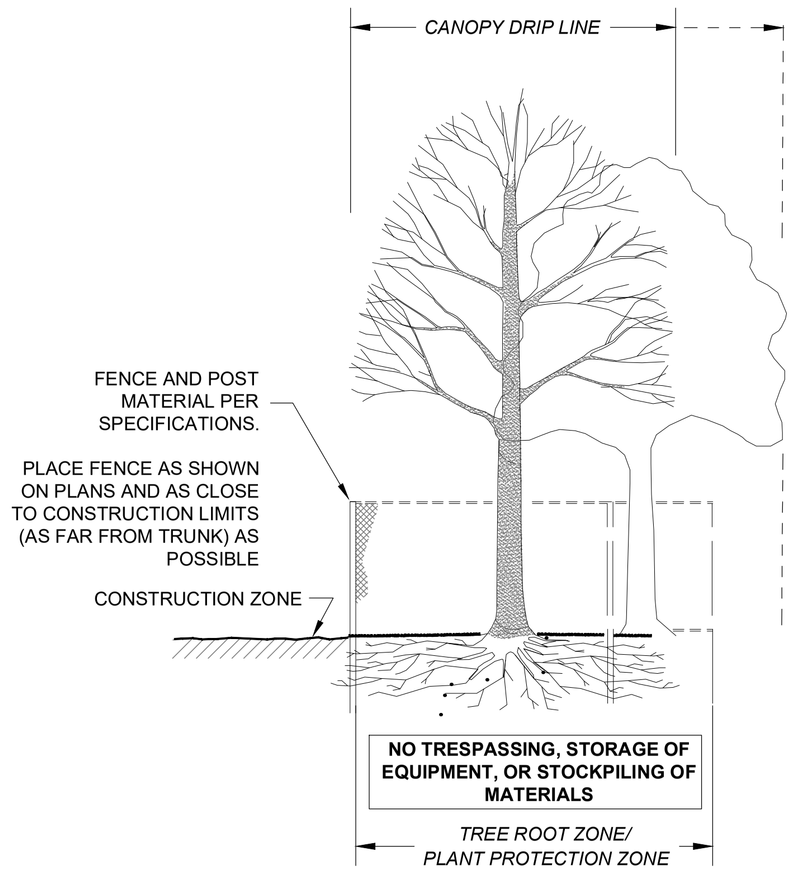

SECTION - FENCE PROTECTION OF ROOT ZONE

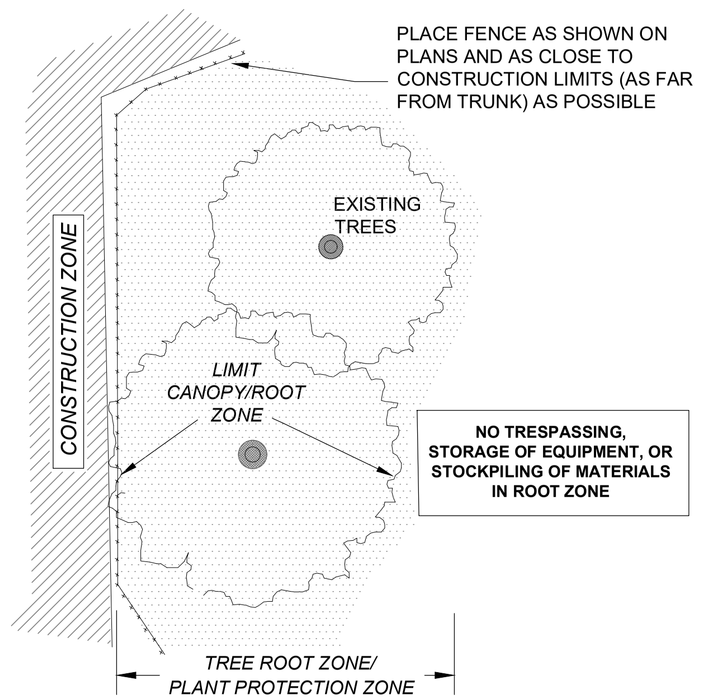

PLAN VIEW - FENCE PROTECTION OF ROOT ZONE

TREE PROTECTION - ROOT ZONE

NOT TO SCALE

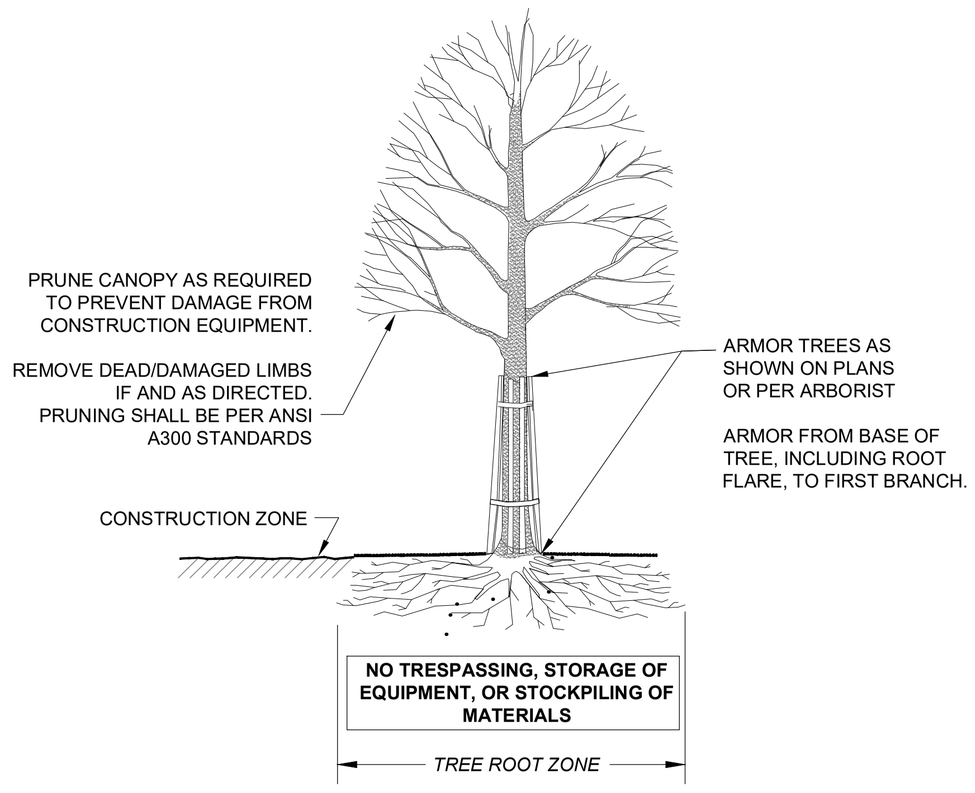

SECTION - TRUNK ARMORING & PRUNING

TREE PROTECTION - TRUNK

LAWRENCE
LMRC RAIL TRAIL

STATE	FED. AID PROJ. NO.	SHEET NO.	TOTAL SHEETS
MA	-	112	225
PROJECT FILE NO.	608930		

LANDSCAPE DETAILS - 6 OF 17

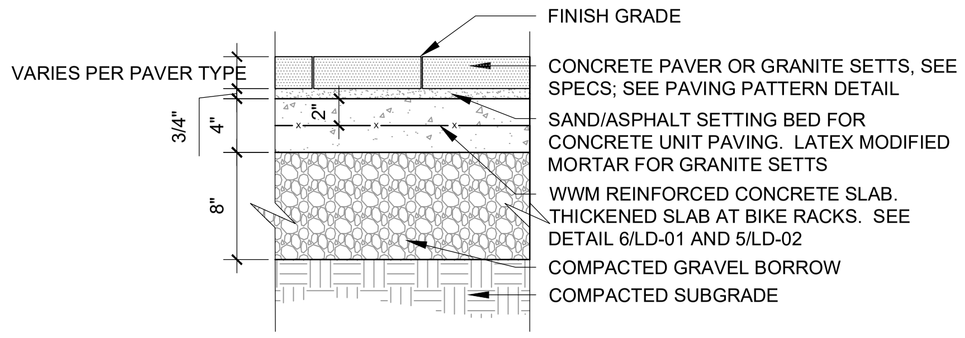

1 CONCRETE UNIT PAVERS - ON GRADE
1 1/2" = 1'-0"

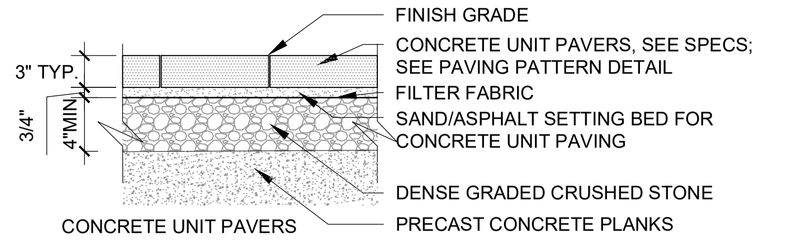

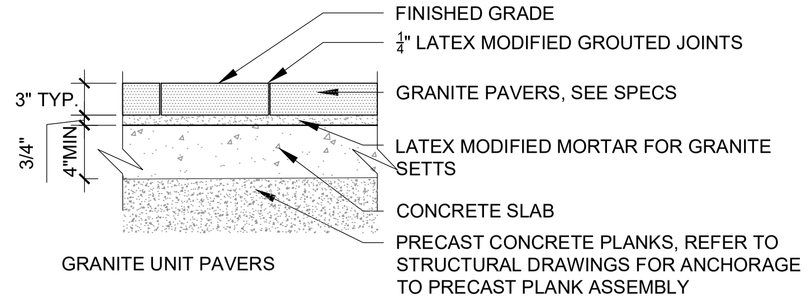

2 UNIT PAVERS - ON STRUCTURE
1 1/2" = 1'-0"

NOTE: DOWEL IS TYPICAL AT ALL EJ'S EXCEPT AGAINST VERTICAL JOINTS WITH WALLS, CURBS OR SITE IMPROVEMENTS

EXPANSION JOINT

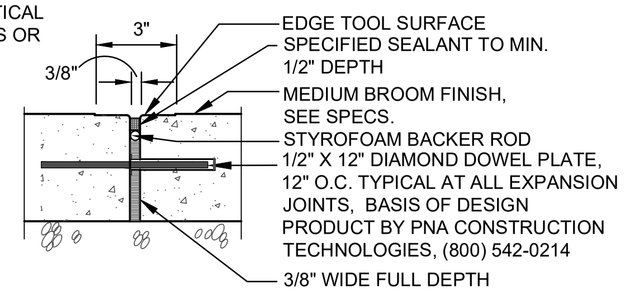

CONTROL JOINT
IN PLAIN CONCRETE

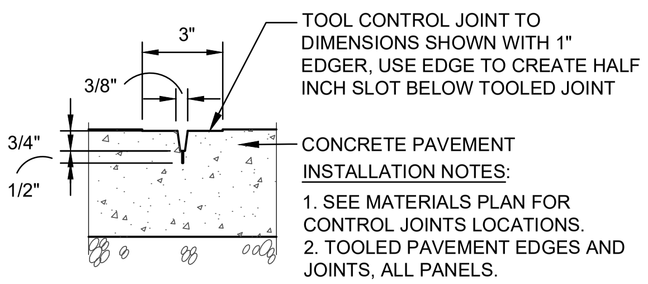

INSTALLATION NOTES:

1. SEE MATERIALS PLAN FOR CONTROL JOINTS LOCATIONS.
2. TOOLED PAVEMENT EDGES AND JOINTS, ALL PANELS.

3 EXPANSION AND CONTROL JOINTS
1 1/2" = 1'-0"

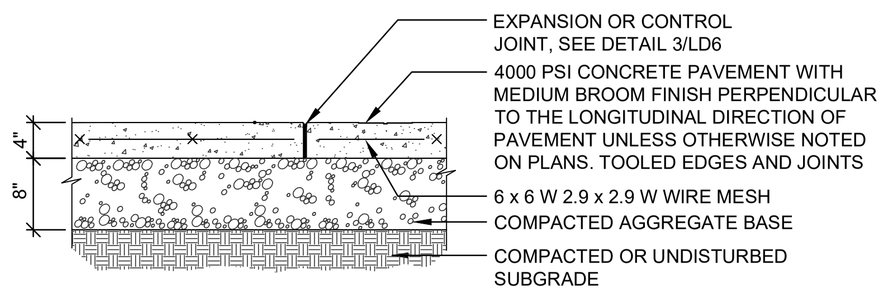

4 CEMENT CONCRETE SIDEWALK
1 1/2" = 1'-0"

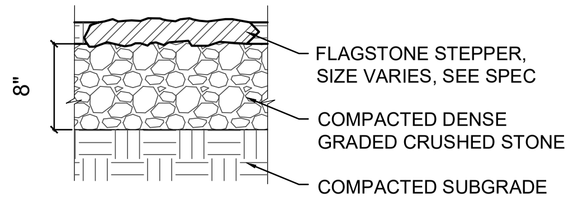

5 FLAGSTONE STEPPING STONES
1 1/2" = 1'-0"

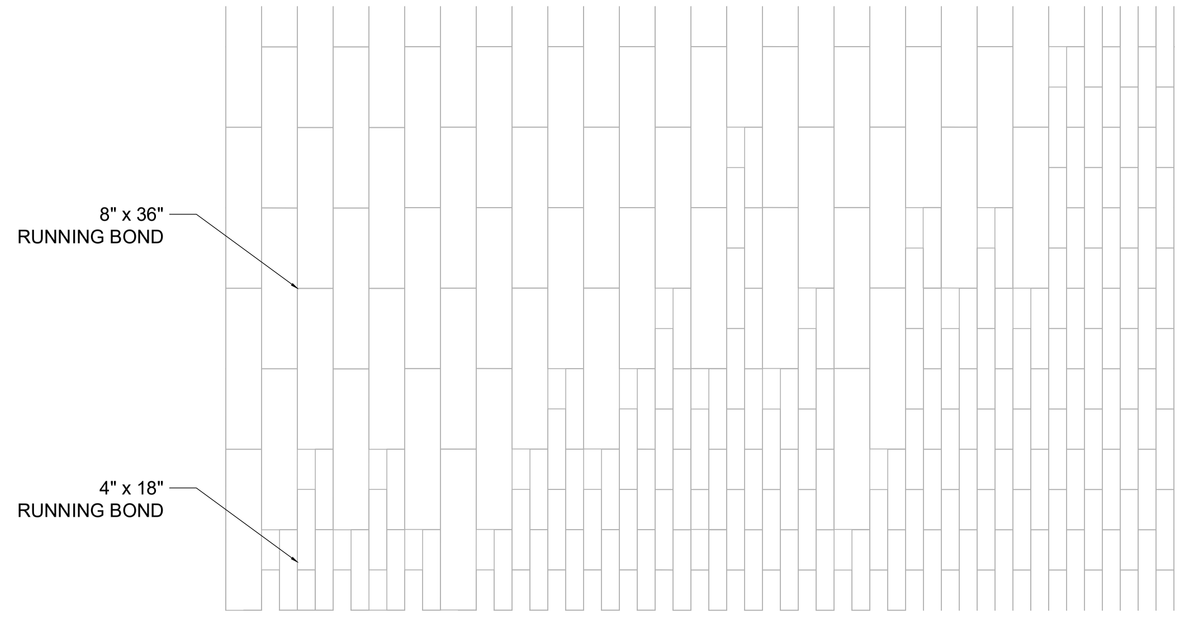

6 CONCRETE PAVER PATTERN
1" = 1'-0"

LANDSCAPE_DETAILS.DWG Plotted on 28-Oct-2022 2:47 PM
Proposal No. 608930-128034
A00869 - 131
FOR PERMITTING PURPOSES - NOT FOR CONSTRUCTION

LAWRENCE
LMRC RAIL TRAIL

STATE	FED. AID PROJ. NO.	SHEET NO.	TOTAL SHEETS
MA	-	113	225
PROJECT FILE NO.	608930		

LANDSCAPE DETAILS - 7 OF 17

LANDSCAPE_DETAILS.DWG Plotted on 28-Oct-2022 2:56 PM

Proposal No. 608930-128034

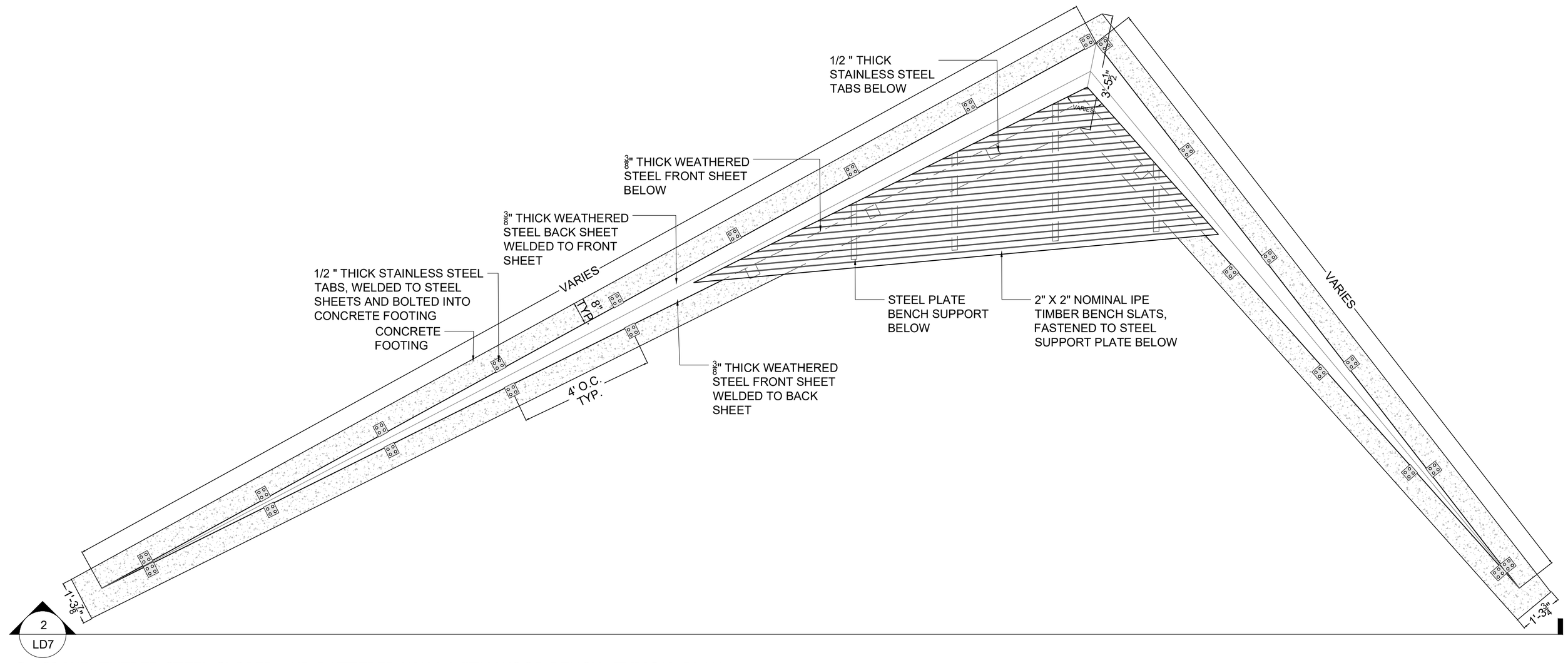

1 S2 WEATHERED STEEL SLOPED AND BATTERED WALL WITH WOOD BENCH; TYPICAL PLAN
1/2" = 1'-0"

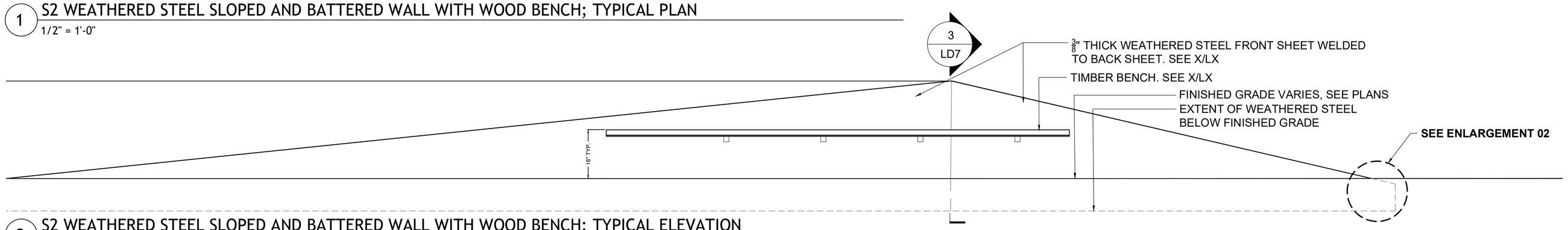

2 S2 WEATHERED STEEL SLOPED AND BATTERED WALL WITH WOOD BENCH; TYPICAL ELEVATION
1/2" = 1'-0"

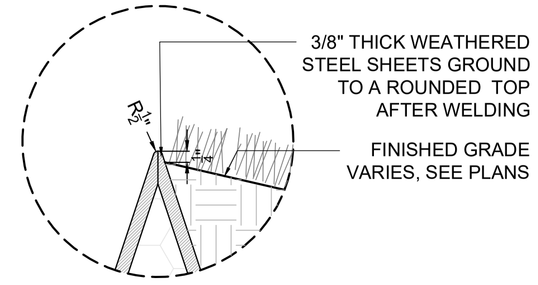

ENLARGEMENT 01

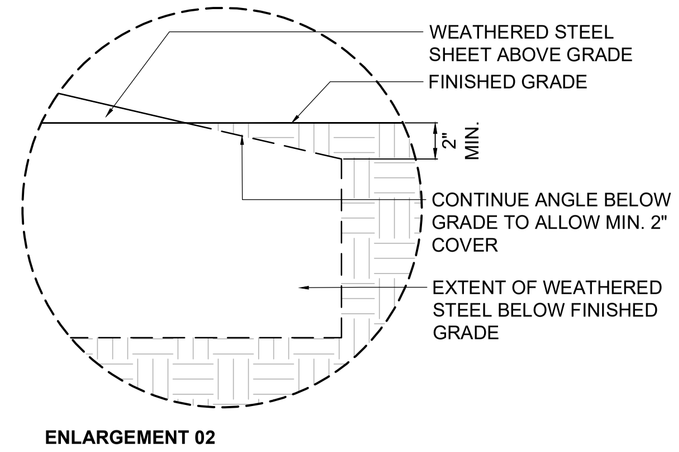

ENLARGEMENT 02

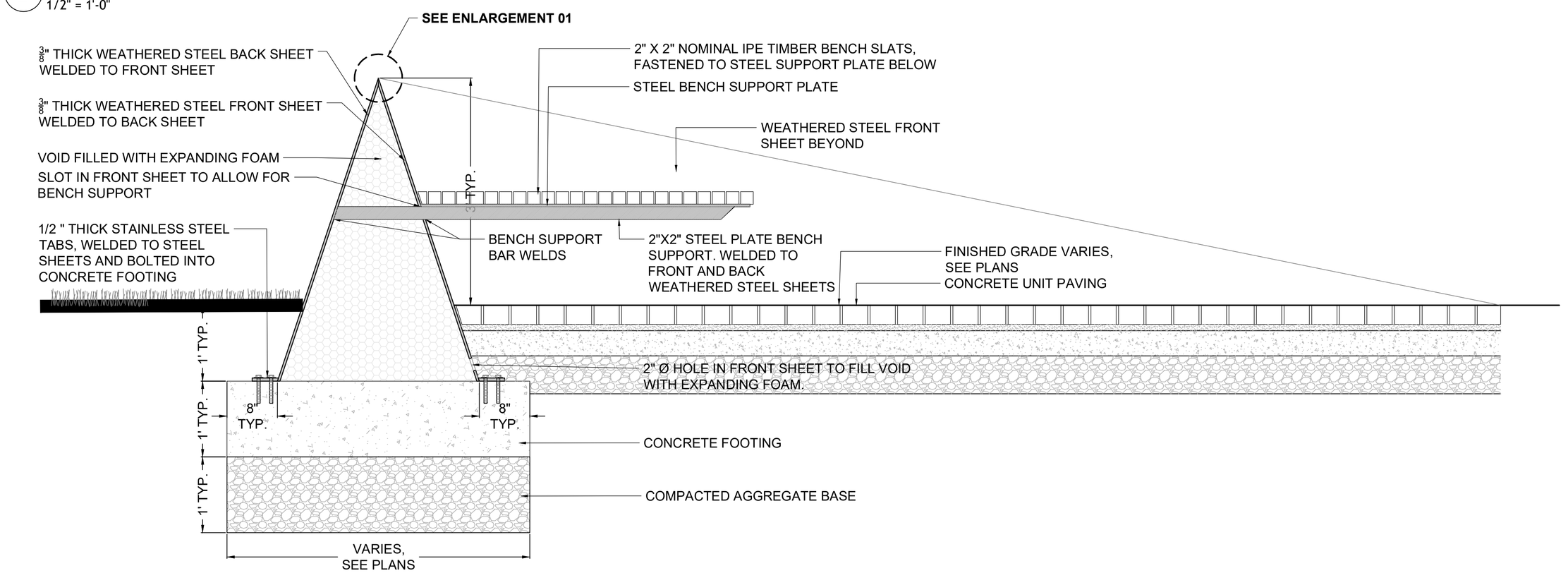

3 S2 WEATHERED STEEL SLOPED AND BATTERED WALL WITH WOOD BENCH; TYPICAL DETAIL
1" = 1'-0"

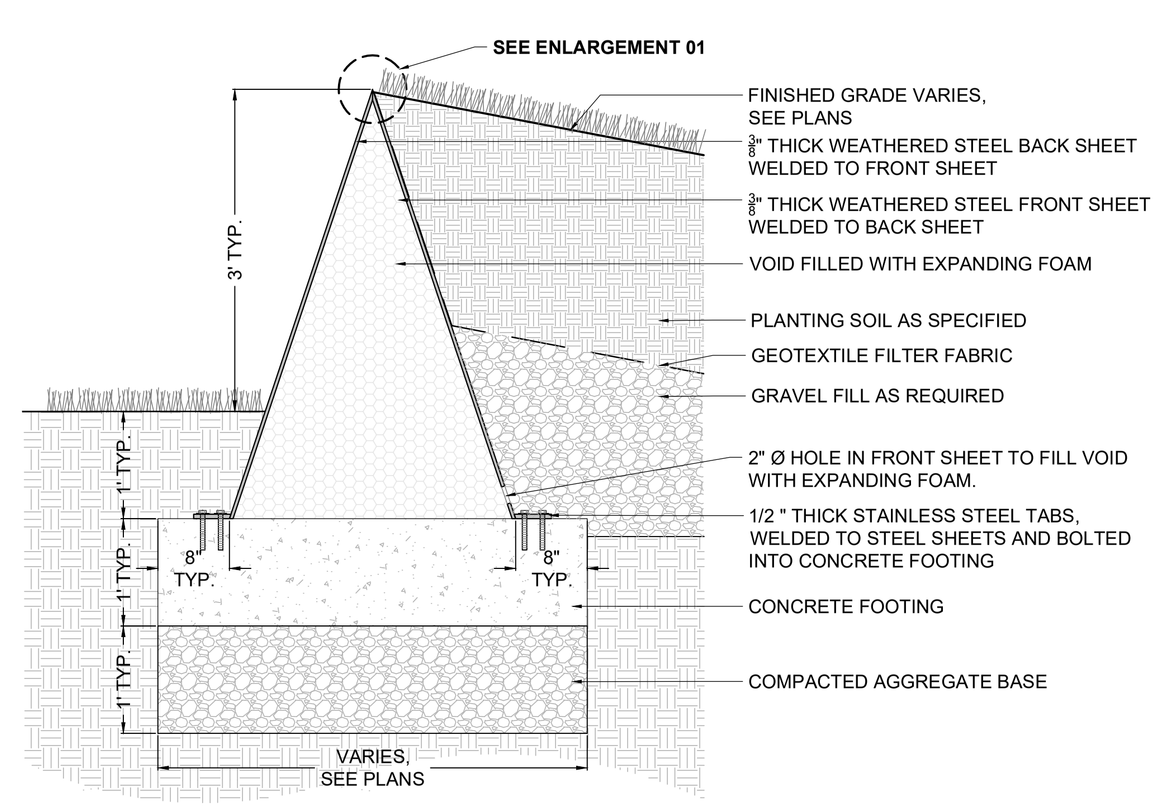

4 S3 WEATHERED STEEL SLOPED AND BATTERED PLANTER WALL
1" = 1'-0"

LAWRENCE
LMRC RAIL TRAIL

STATE	FED. AID PROJ. NO.	SHEET NO.	TOTAL SHEETS
MA	-	114	225
PROJECT FILE NO.	608930		

LANDSCAPE DETAILS - 8 OF 17

LANDSCAPE_DETAILS.DWG Plotted on 28-Oct-2022 2:55 PM

Proposal No. 608930-128034

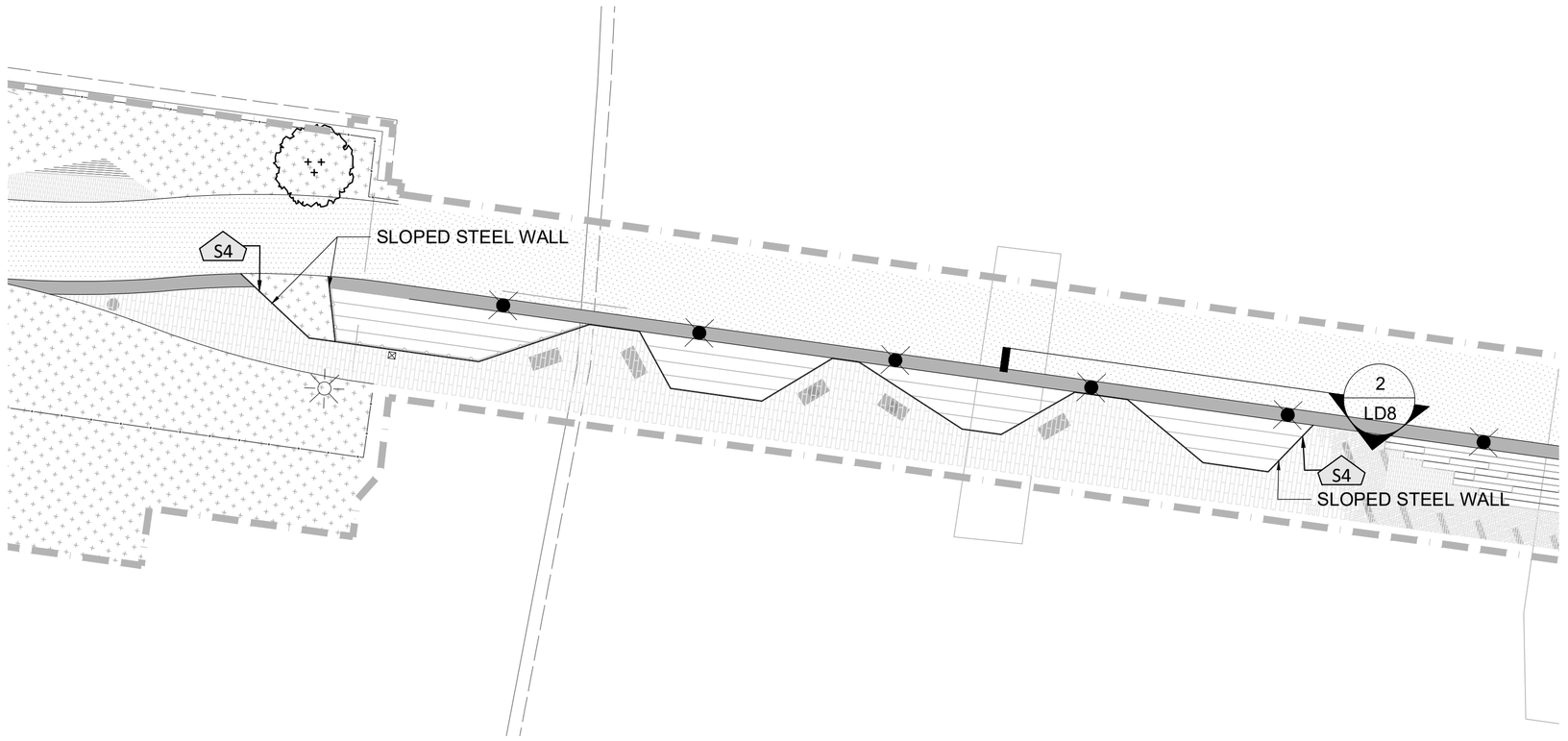

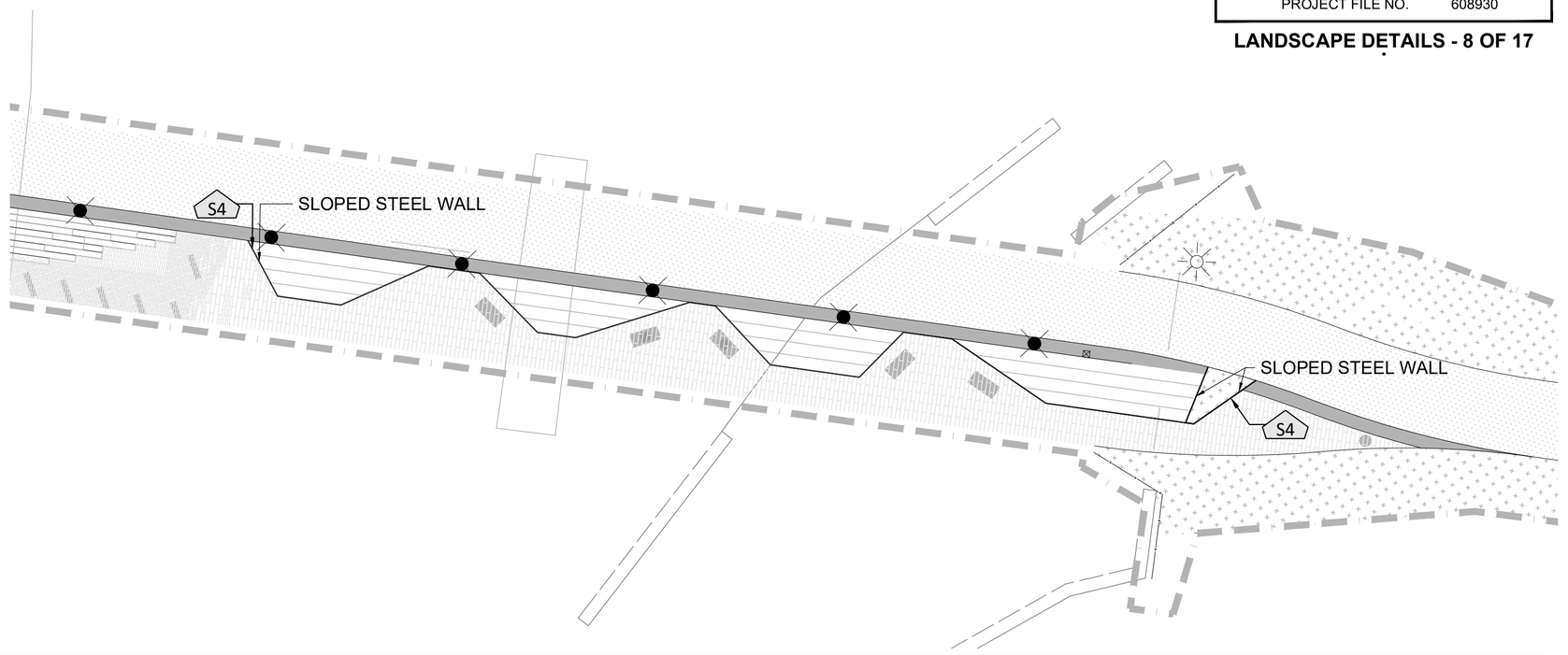

1 S4 WEATHERED STEEL SLOPED WALL; KEY PLAN
NTS

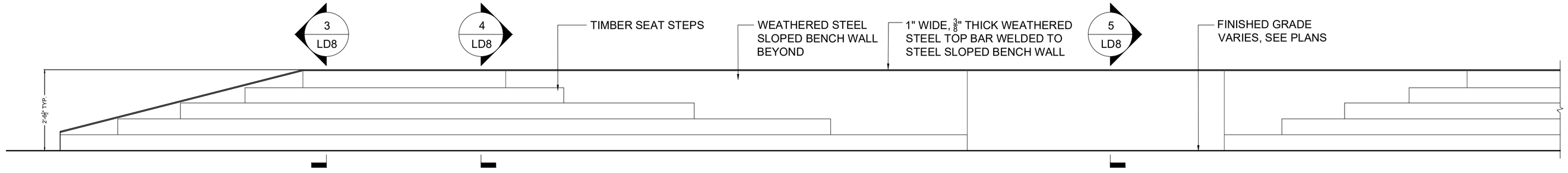

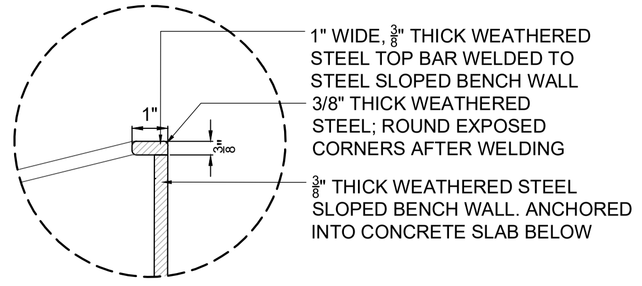

ENLARGEMENT 01

2 S4 WEATHERED STEEL SLOPED WALL; TYPICAL ELEVATION
1/2" = 1'-0"

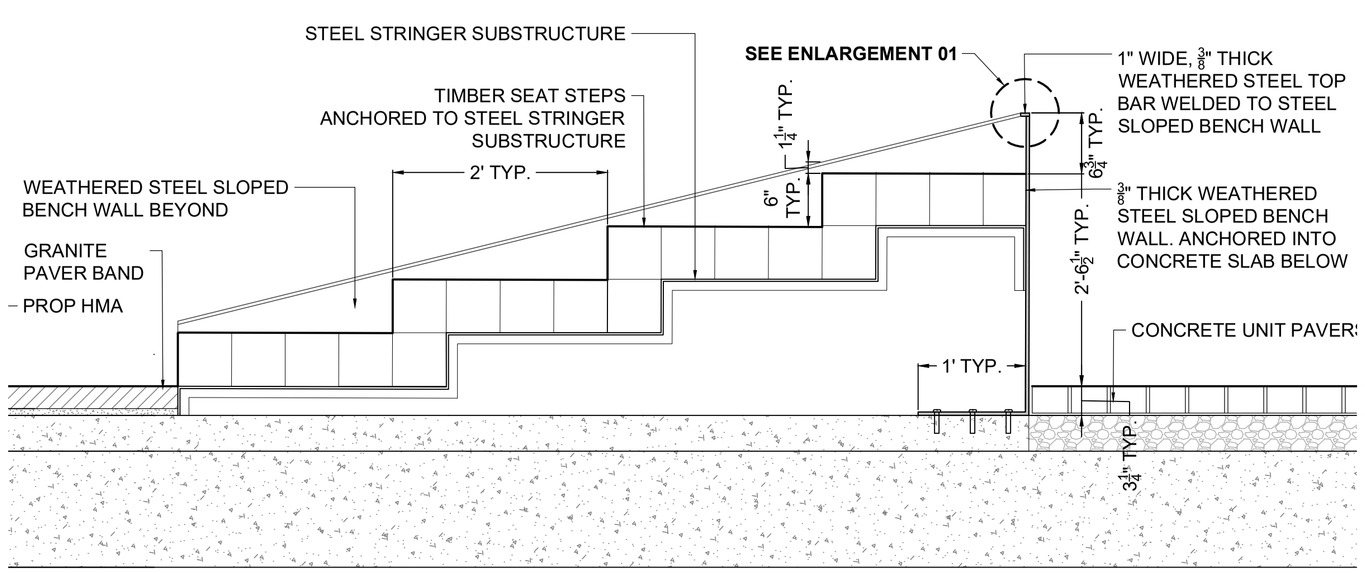

3 S4 WEATHERED STEEL SLOPED WALL; TYPICAL SECTION
1" = 1'-0"

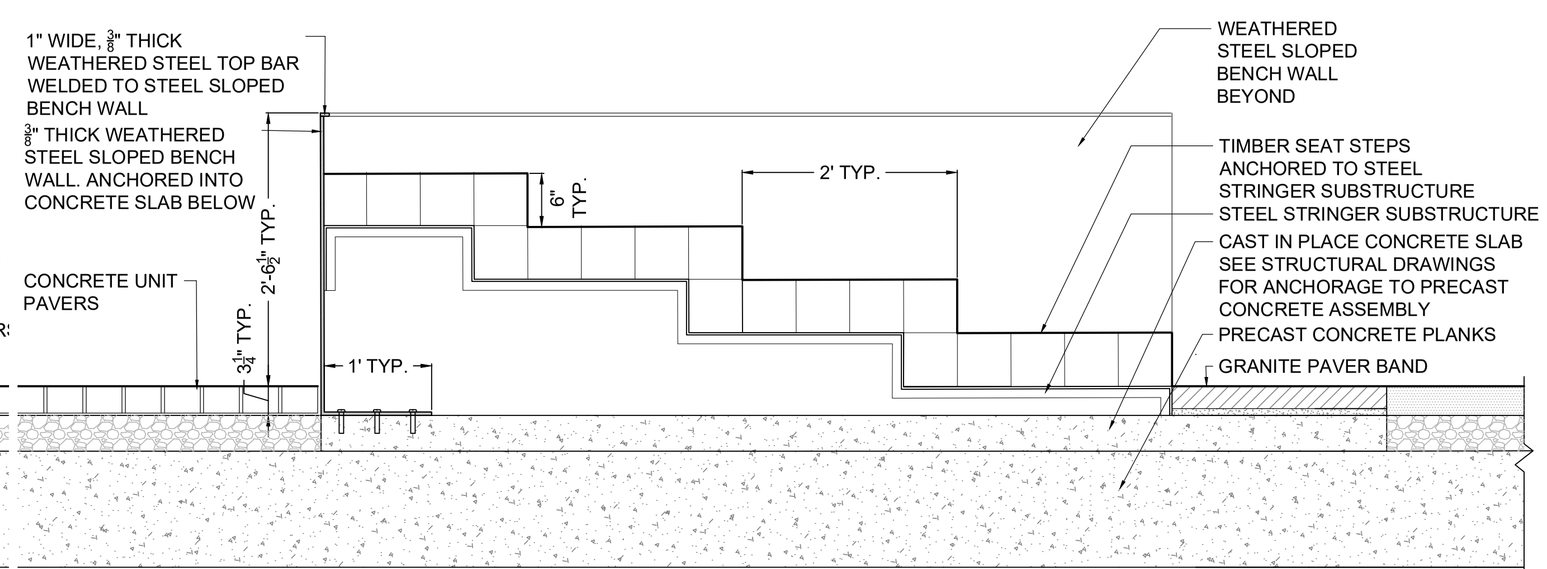

4 S4 WEATHERED STEEL SLOPED WALL; TYPICAL SECTION
1" = 1'-0"

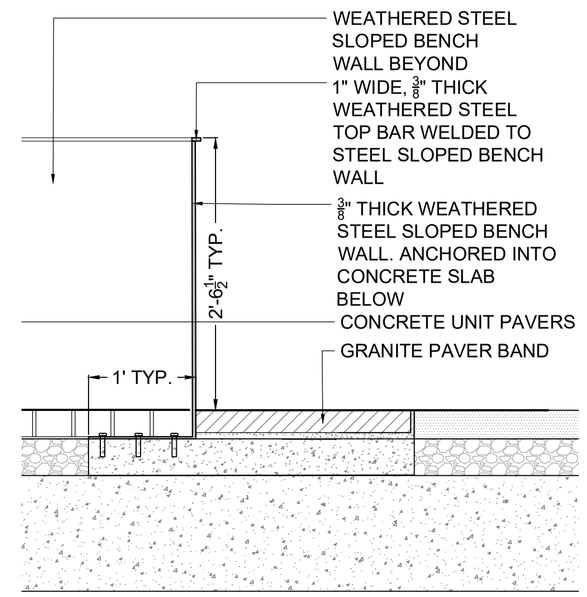

5 S4 WEATHERED STEEL SLOPED WALL; TYPICAL SECTION
1" = 1'-0"

FOR PERMITTING PURPOSES - NOT FOR CONSTRUCTION

LAWRENCE
LMRC RAIL TRAIL

STATE	FED. AID PROJ. NO.	SHEET NO.	TOTAL SHEETS
MA	-	115	225
PROJECT FILE NO.	608930		

LANDSCAPE DETAILS - 9 OF 17

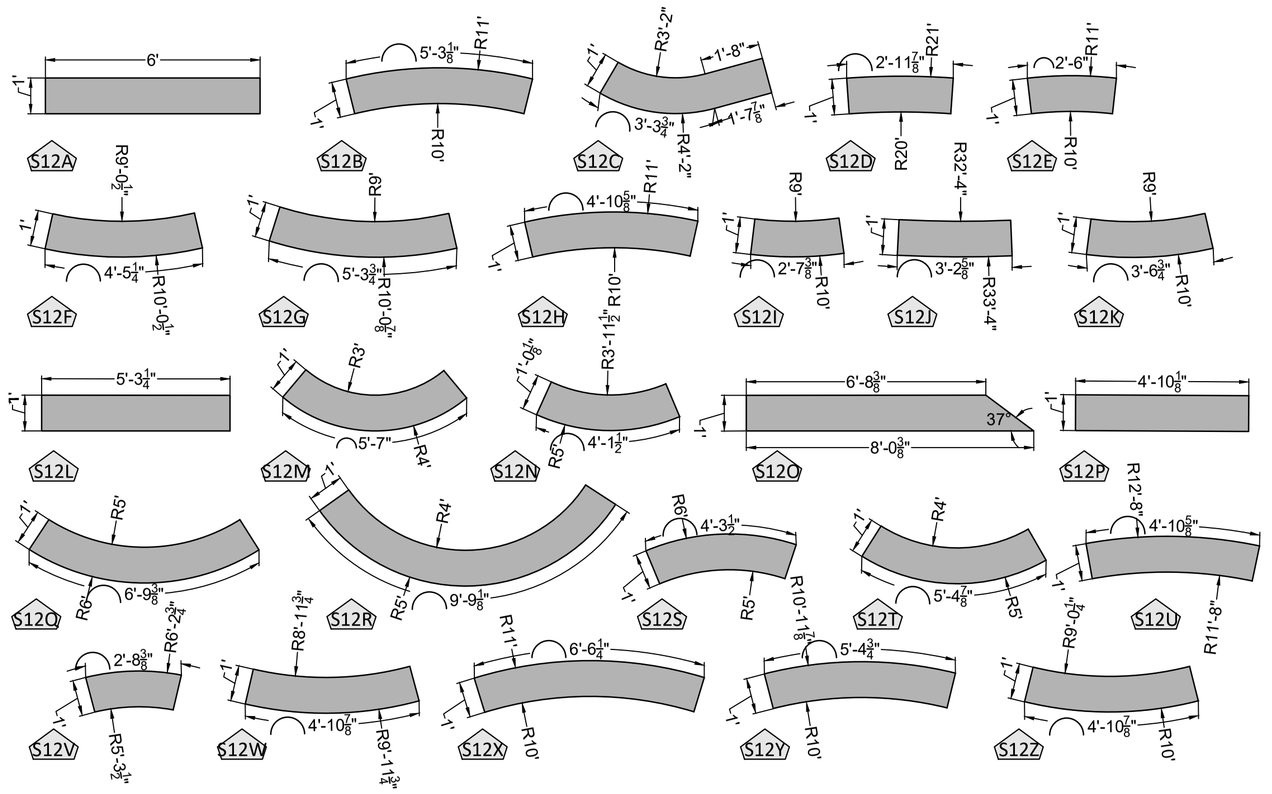

1 S12 PRECAST CONCRETE SEAT STEPS
1/2" = 1'-0"

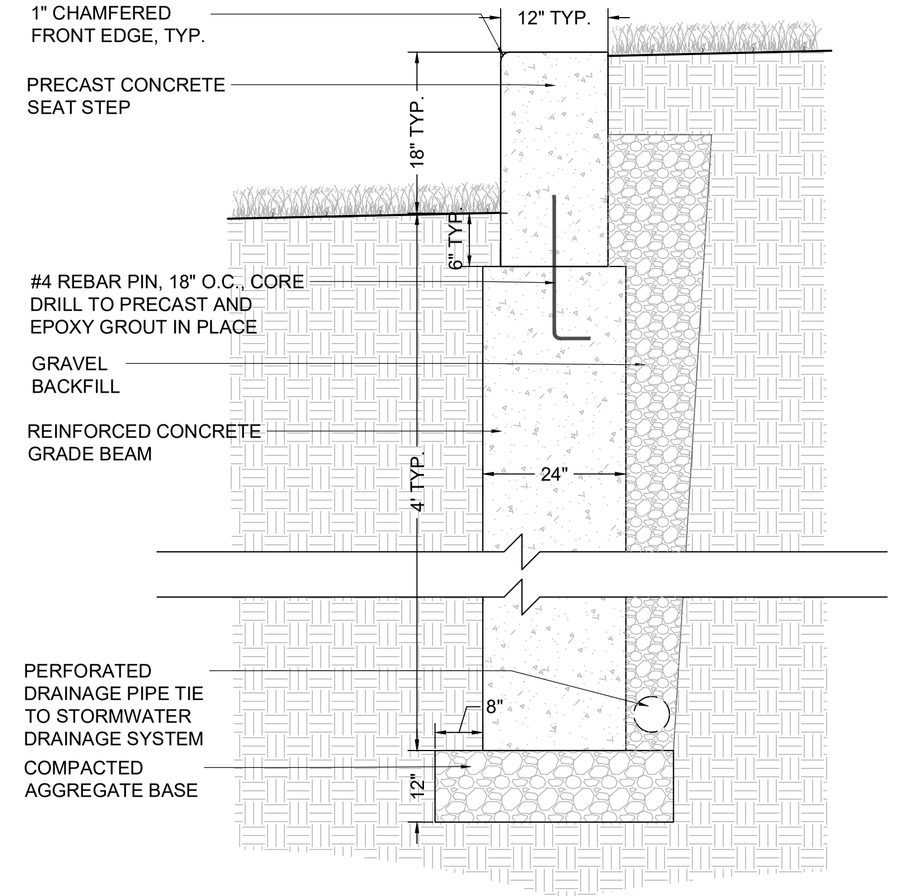

2 S12 PRECAST CONCRETE SEAT STEPS; TYPICAL DETAIL
1" = 1'-0"

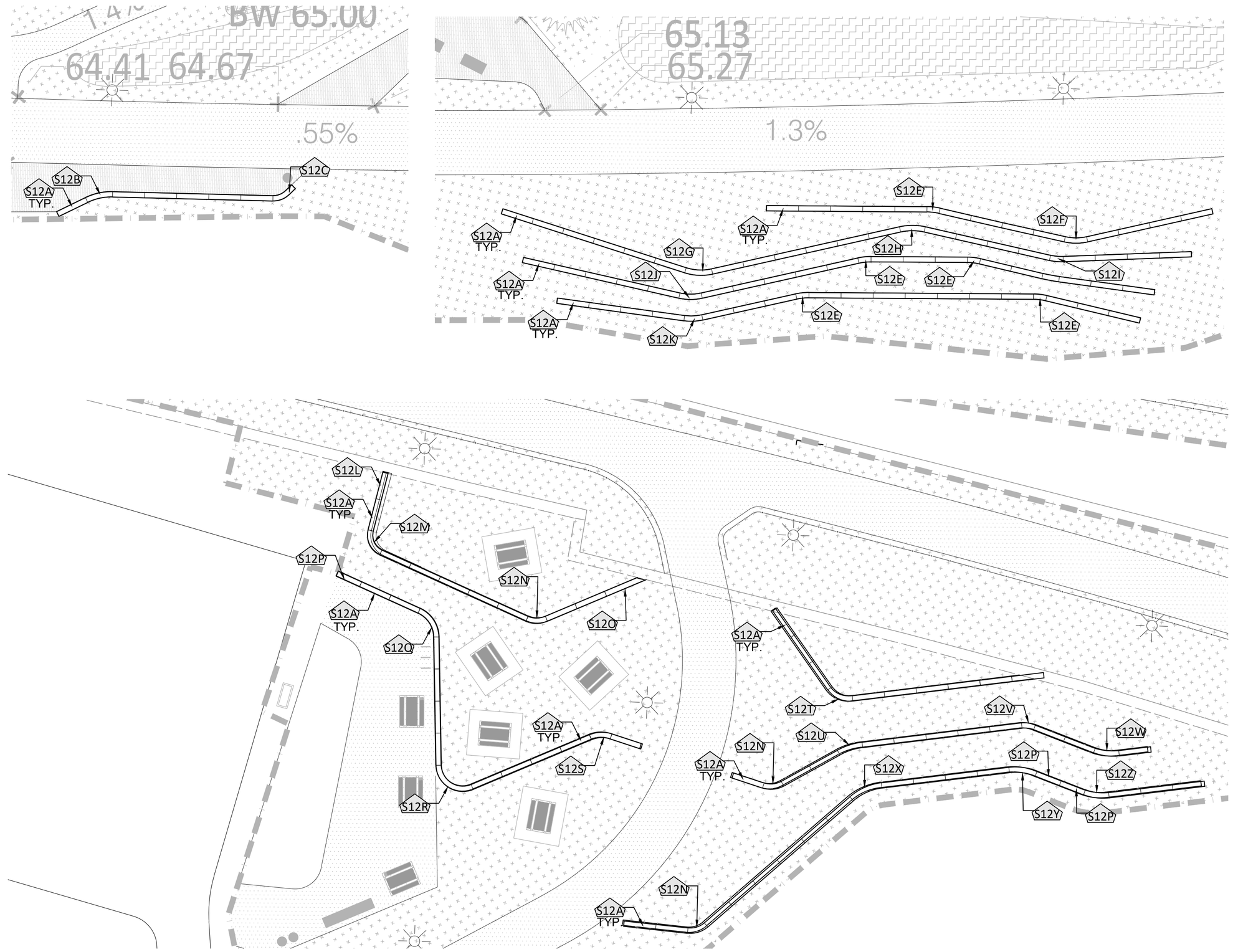

3 S12 PRECAST CONCRETE SEAT STEPS; KEY PLANS
NTS

FOR PERMITTING PURPOSES - NOT FOR CONSTRUCTION

LANDSCAPE_DETAILS.DWG Plotted on 28-Oct-2022 3:02 PM

Proposal No. 608930-128034

A00869 - 134

LAWRENCE
LMRC RAIL TRAIL

STATE	FED. AID PROJ. NO.	SHEET NO.	TOTAL SHEETS
MA	-	116	225
PROJECT FILE NO.	608930		

LANDSCAPE DETAILS - 10 OF 17

LANDSCAPE_DETAILS.DWG Plotted on 28-Oct-2022 3:02 PM

Proposal No. 608930-128034

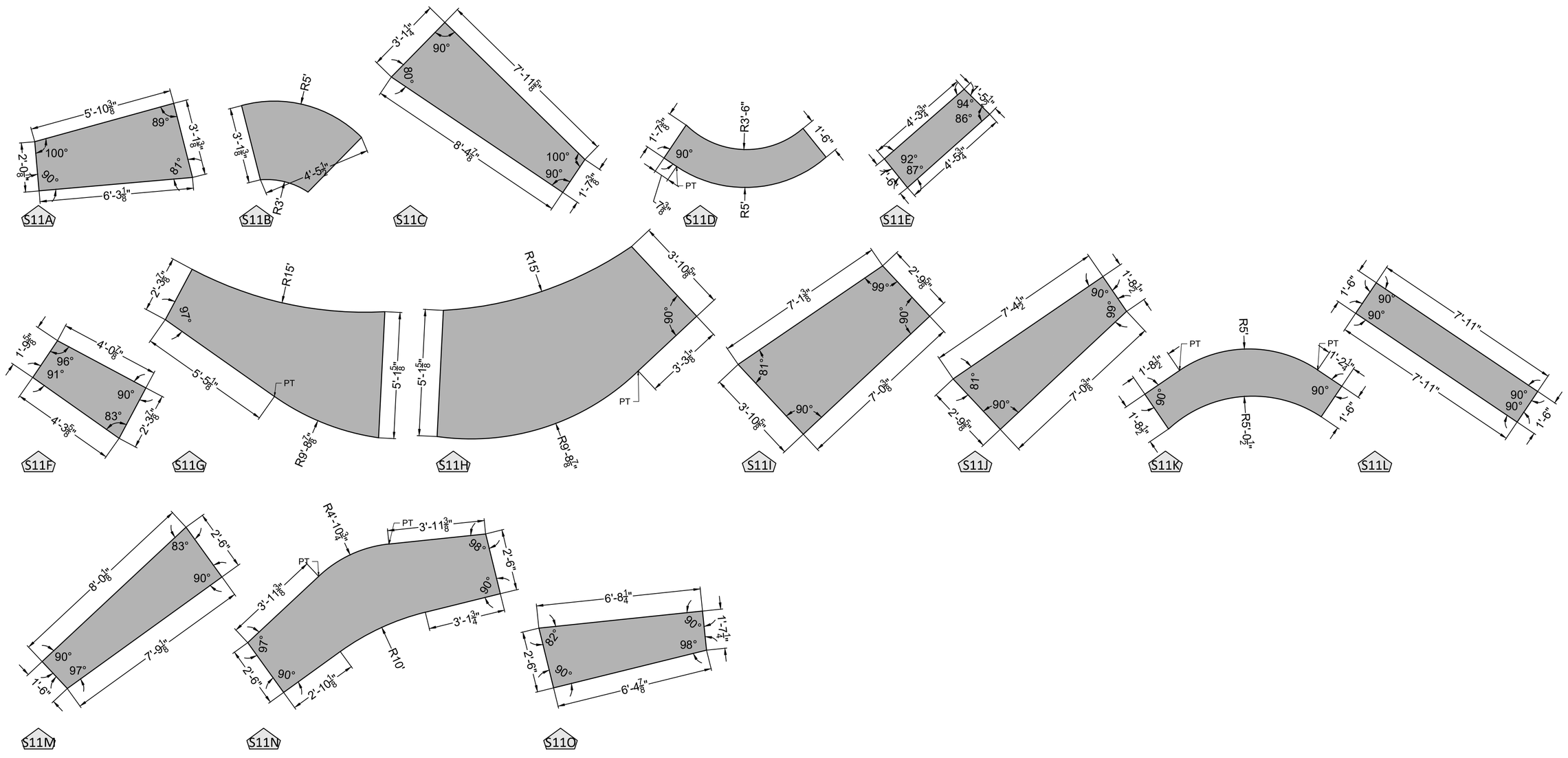

1 S11 PRECAST CONCRETE SEATWALLS

1/2" = 1'-0"

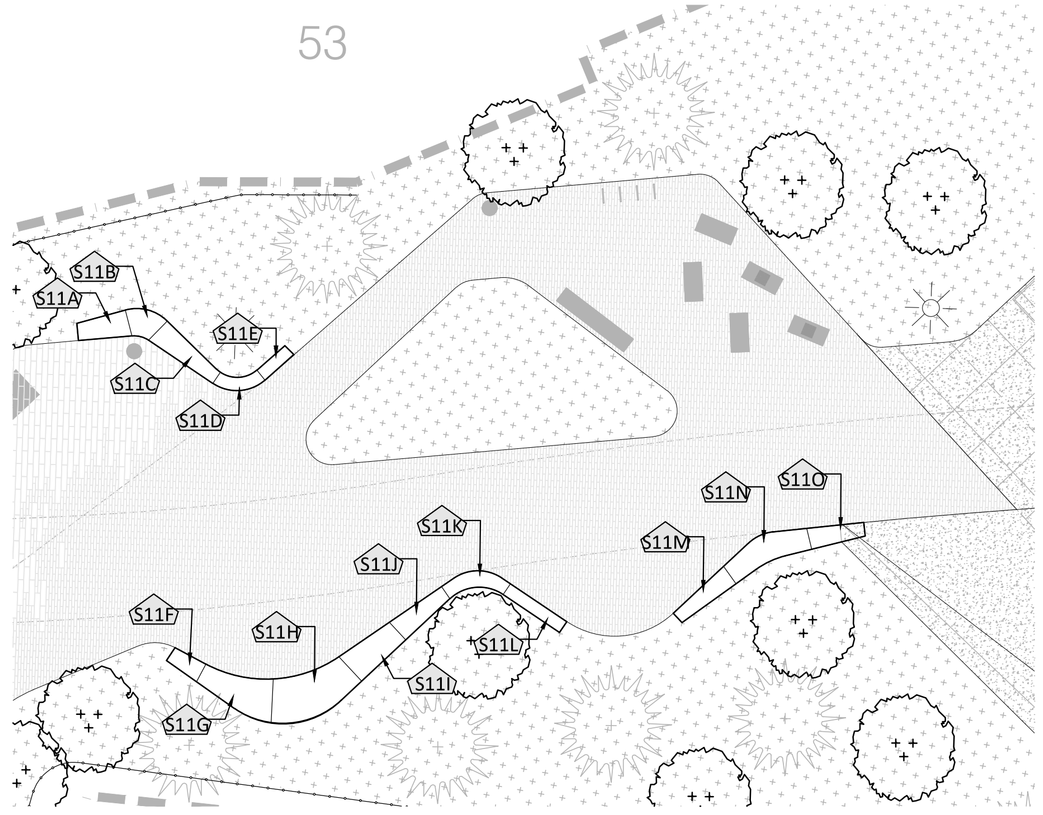

2 S11 SEATWALLS KEY PLAN

NTS

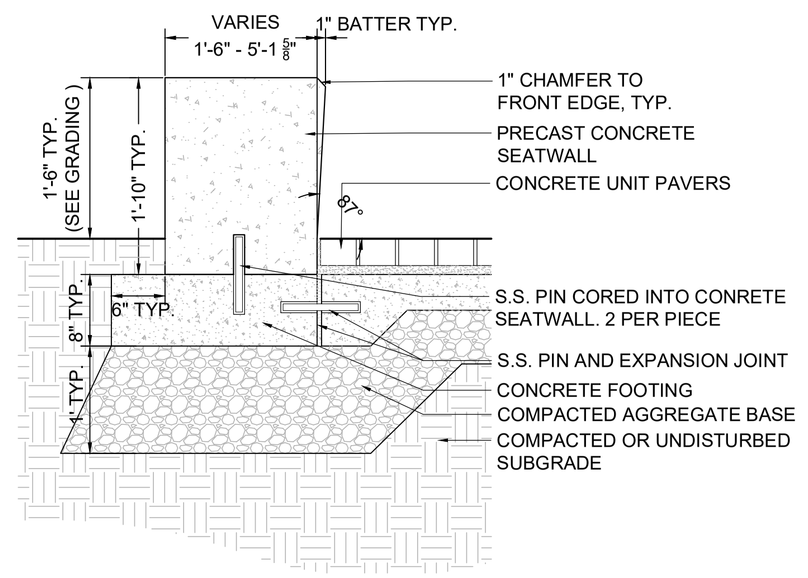

3 S11 SEATWALLS; TYPICAL DETAIL

1" = 1'-0"

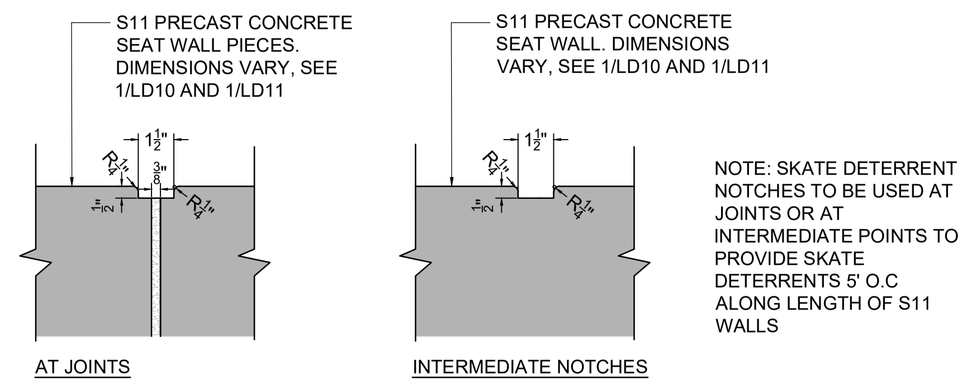

4 S11 SEATWALLS; SKATE DETERRENT NOTCHES

NTS

LAWRENCE
LMRC RAIL TRAIL

STATE	FED. AID PROJ. NO.	SHEET NO.	TOTAL SHEETS
MA	-	117	225
PROJECT FILE NO.	608930		

LANDSCAPE DETAILS - 11 OF 12

LANDSCAPE_DETAILS.DWG Plotted on 28-Oct-2022 3:10 PM

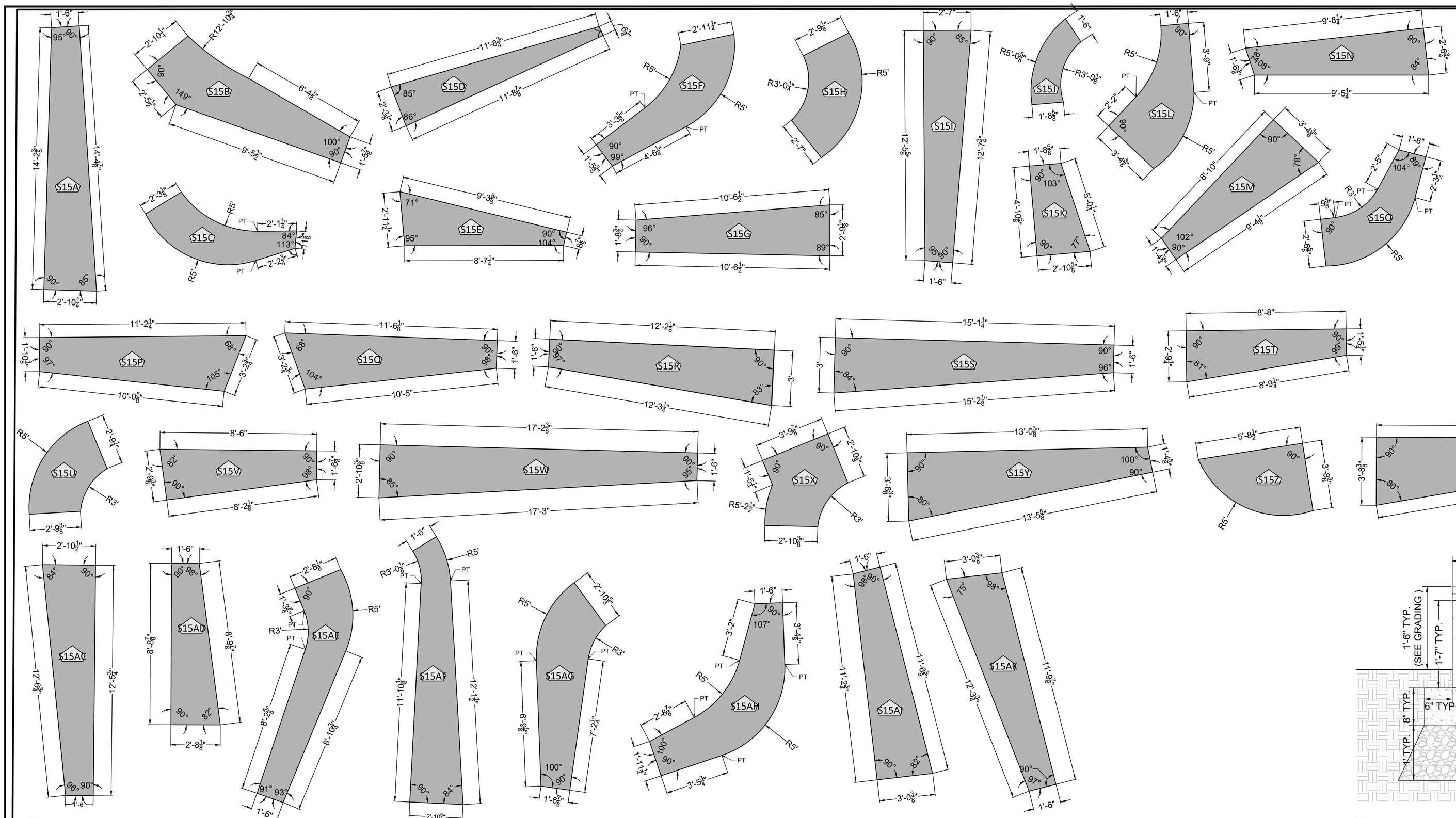

1 S15 SEATWALLS WITH BENCH
1/2" = 1'-0"

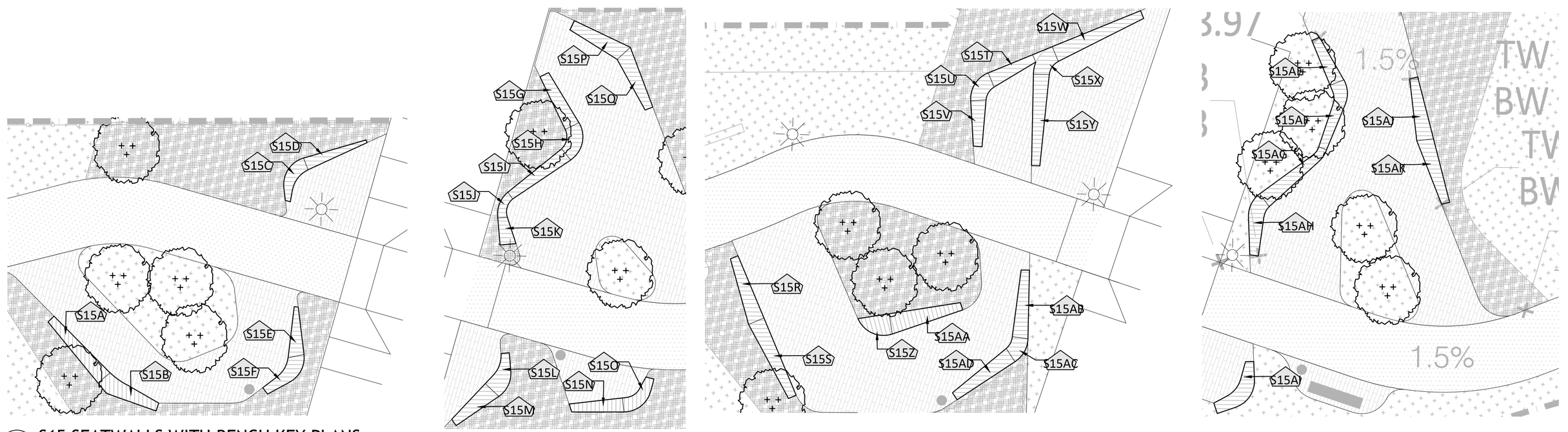

2 S15 SEATWALLS WITH BENCH KEY PLANS
NTS

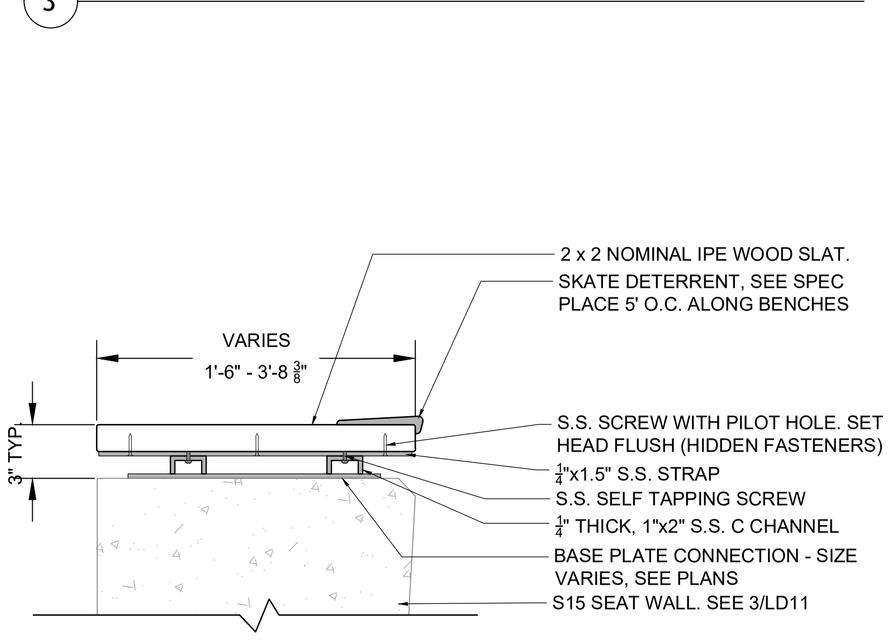

3 S15 SEATWALL WITH BENCH; TYPICAL DETAIL

4 S15 SEATWALL WITH BENCH; BENCH TOP DETAIL ENLARGEMENT

LANDSCAPE_DETAILS.DWG Plotted on 28-Oct-2022 3:08 PM

LAWRENCE
LMRC RAIL TRAIL

STATE	FED. AID PROJ. NO.	SHEET NO.	TOTAL SHEETS
MA	-	118	225
	PROJECT FILE NO.	608930	

LANDSCAPE DETAILS - 12 OF 17

FOR PERMITTING PURPOSES - NOT FOR CONSTRUCTION

NOT USED

LAWRENCE
LMRC RAIL TRAIL

STATE	FED. AID PROJ. NO.	SHEET NO.	TOTAL SHEETS
MA	-	119	225
PROJECT FILE NO.	608930		

LANDSCAPE DETAILS - 13 OF 17

LANDSCAPE_DETAILS.DWG Plotted on 28-Oct-2022 3:13 PM

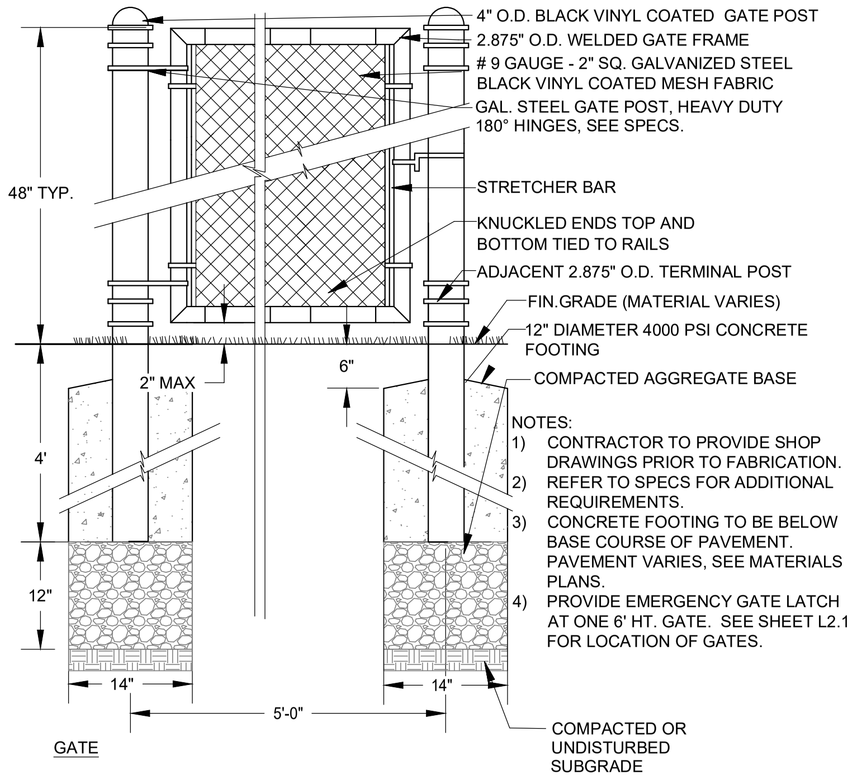

GATE

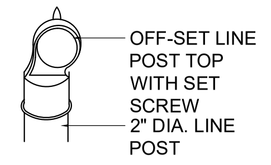

POST TOP ENLARGEMENT

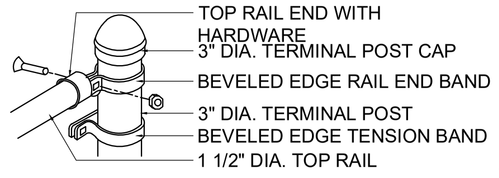

POST-TOP RAIL CONNECTION

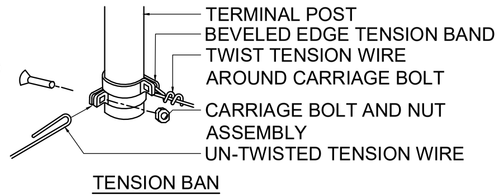

TENSION BAN ENLARGEMENT

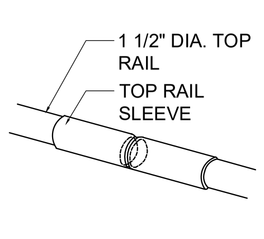

TOP RAIL SLEEVE ENLARGEMENT

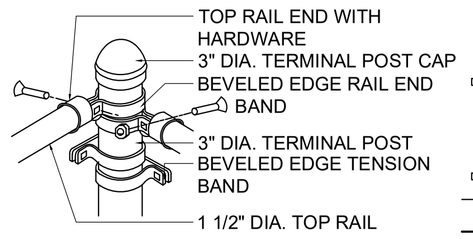

POST-TOP RAIL CORNER CONNECTION

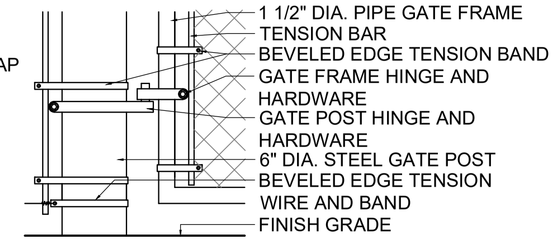

GATE FRAME-HINGE CONNECTION

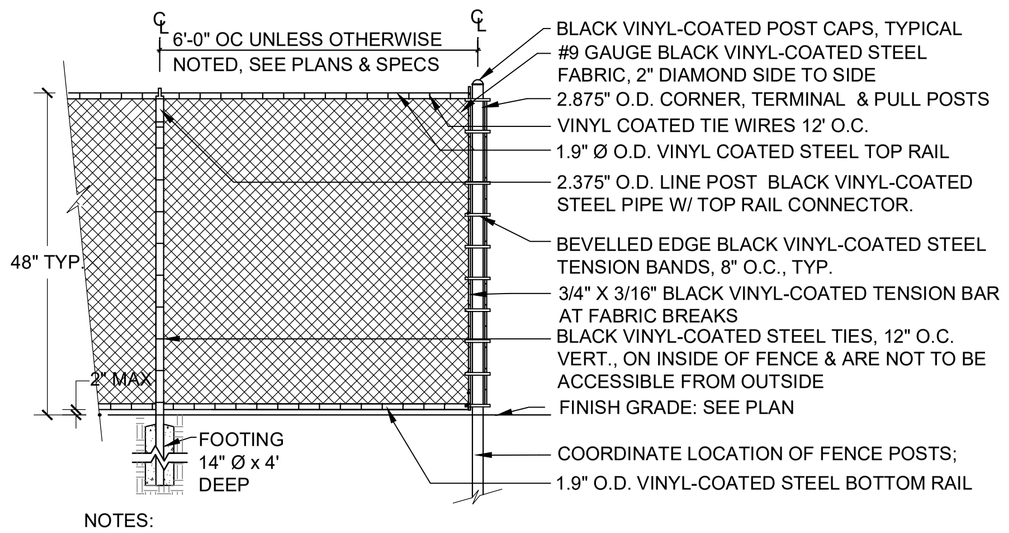

NOTES:
1. TOPS & BOTTOMS OF ALL FABRIC TO BE KNUCKLED DOWN. ALL FENCE FABRIC SHALL BE BLACK VINYL-COATED STEEL AS PER SPEC.
2. THIS DETAIL SHOWS IN-GROUND OR IN-PAVEMENT MOUNTING OF CHAIN LINK FENCE. FOR MOUNTING DETAIL SEE POST FOOTING ON GRADE DETAIL.

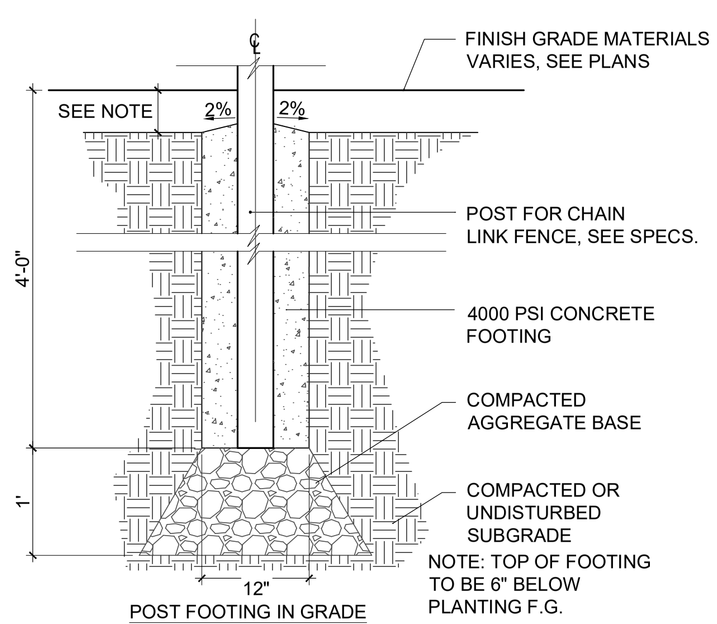

POST FOOTING IN GRADE

1 CHAIN LINK FENCE
NTS

LANDSCAPE_DETAILS.DWG Plotted on 28-Oct-2022 3:18 PM

LAWRENCE
LMRC RAIL TRAIL

STATE	FED. AID PROJ. NO.	SHEET NO.	TOTAL SHEETS
MA	-	120	225
PROJECT FILE NO.	608930		

LANDSCAPE DETAILS - 14 OF 17

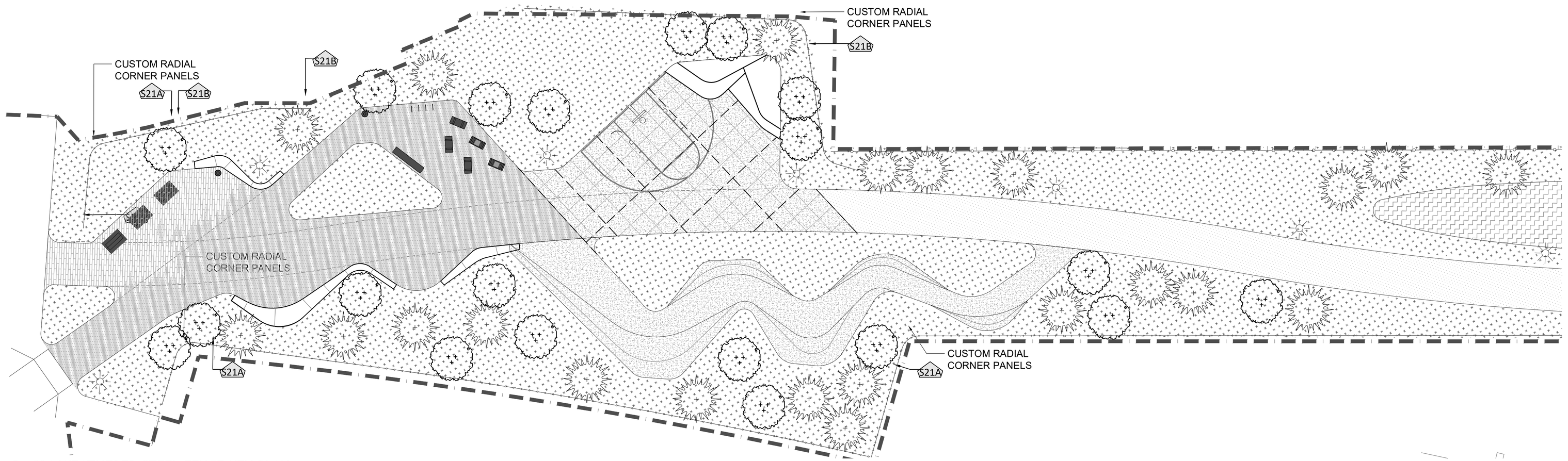

1 S21 WEATHERED STEEL FENCE KEY PLAN
NTS

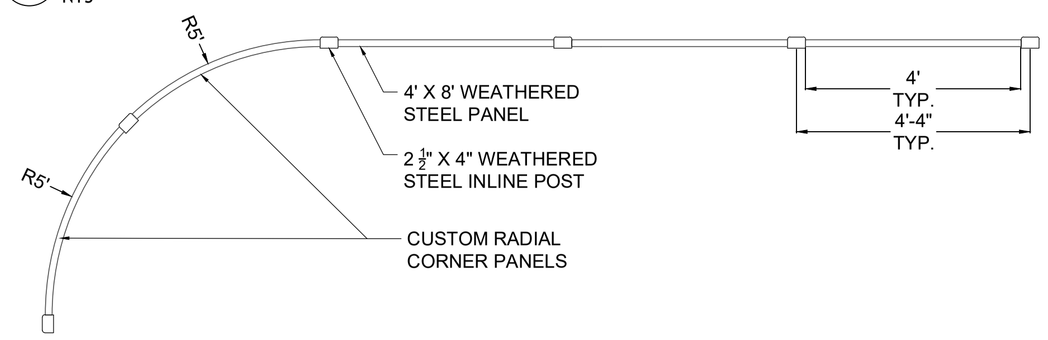

2 S21 WEATHERED STEEL FENCE - BASIS OF DESIGN
1/2" = 1'-0"

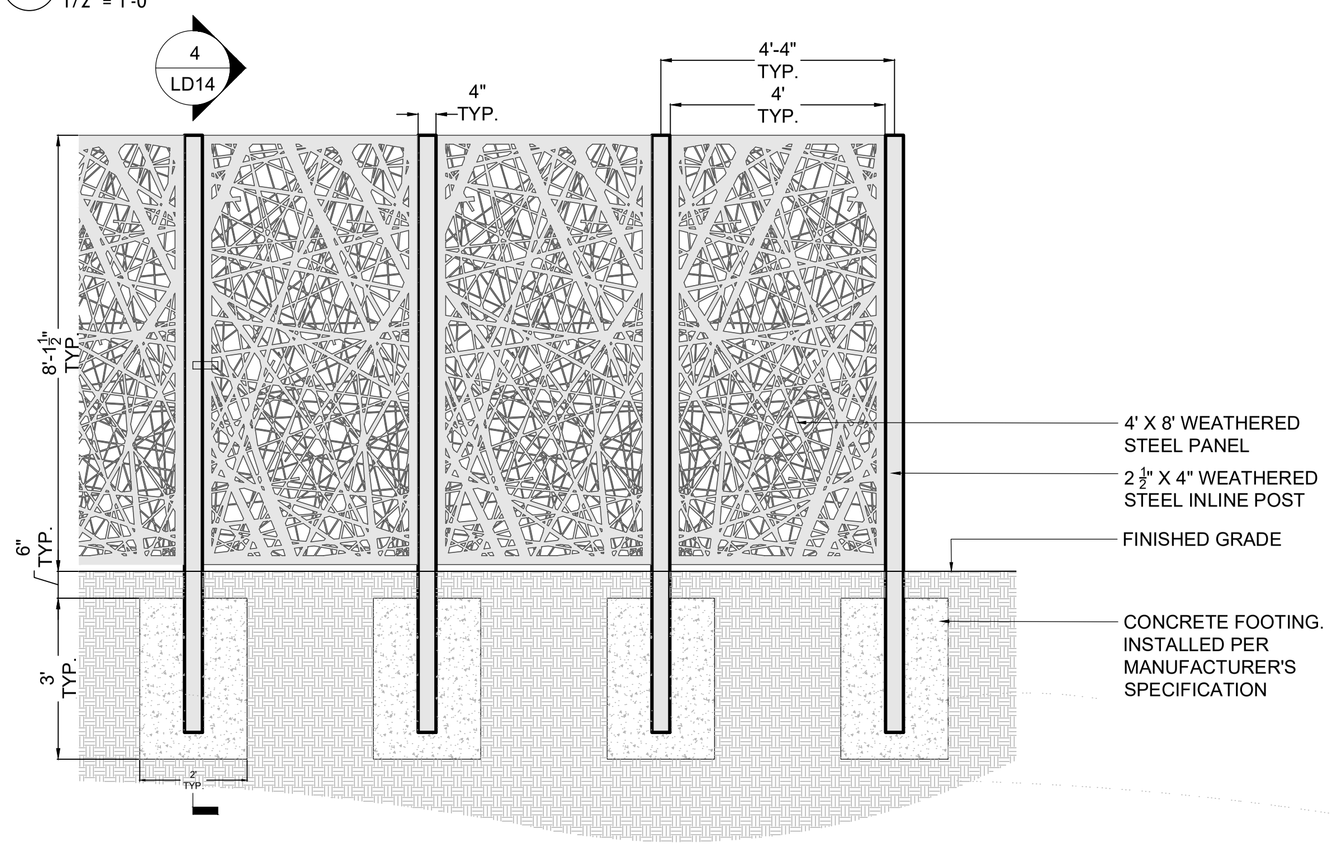

3 S21 WEATHERED STEEL FENCE - BASIS OF DESIGN
1/2" = 1'-0"

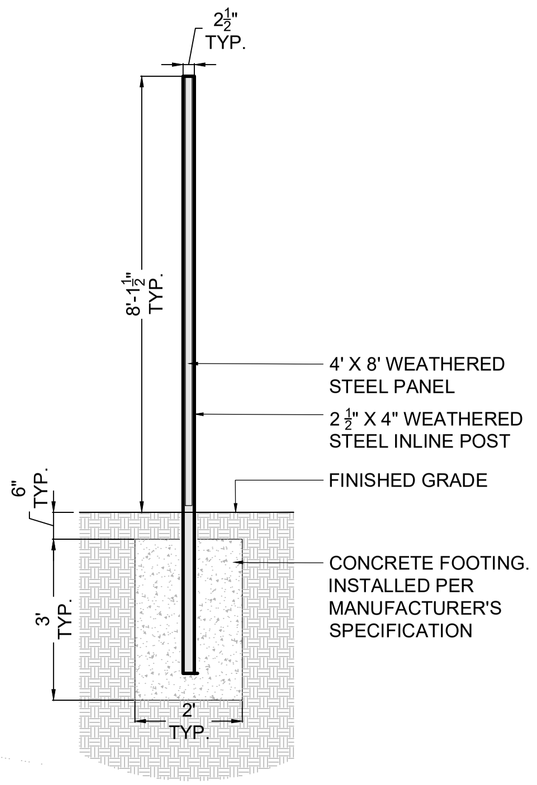

4 S21 WEATHERED STEEL FENCE - BASIS OF DESIGN
1/2" = 1'-0"

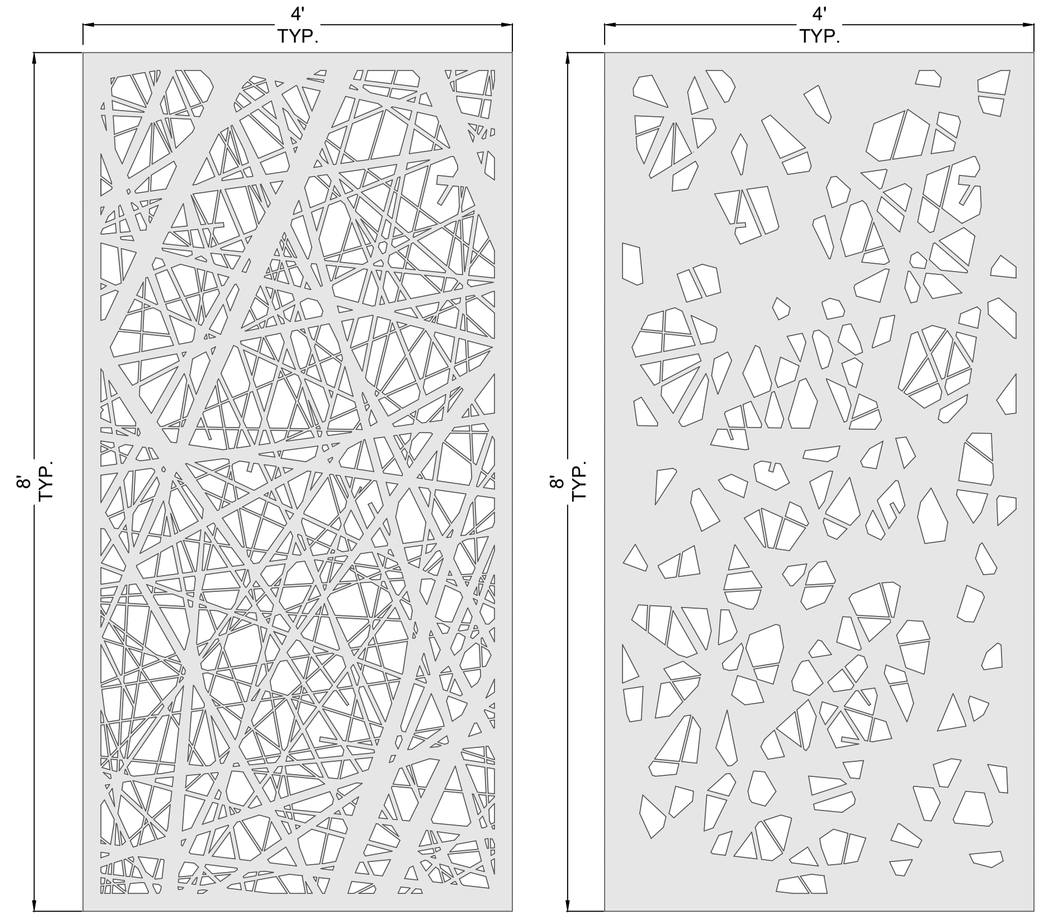

SCREEN PANEL TYPE A - "COMPLEX NEST"

SCREEN PANEL TYPE B - "STAINED GLASS"

S21A S21B
5 S21 WEATHERED STEEL FENCE - BASIS OF DESIGN
1" = 1'-0"

FOR PERMITTING PURPOSES - NOT FOR CONSTRUCTION

LANDSCAPE_DETAILS.DWG Plotted on 28-Oct-2022 3:18 PM

LAWRENCE
LMRC RAIL TRAIL

STATE	FED. AID PROJ. NO.	SHEET NO.	TOTAL SHEETS
MA	-	121	225
	PROJECT FILE NO. 608930		

LANDSCAPE DETAILS - 15 OF 17

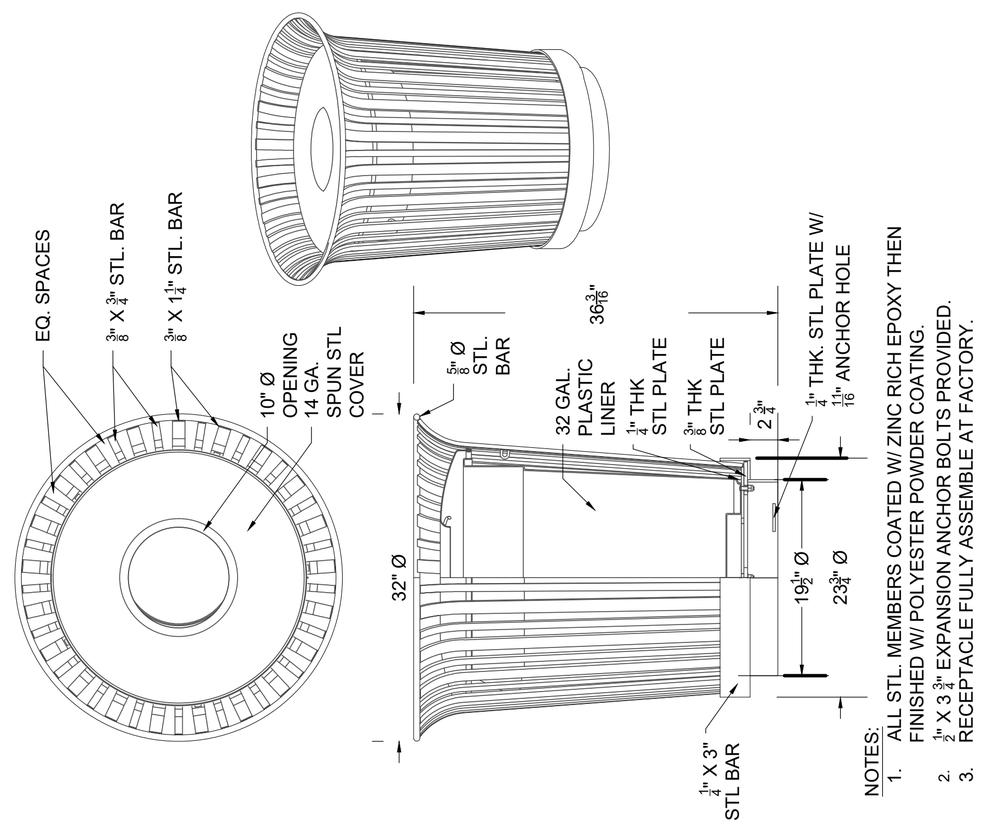

6 TRASH RECEPTACLE
NTS

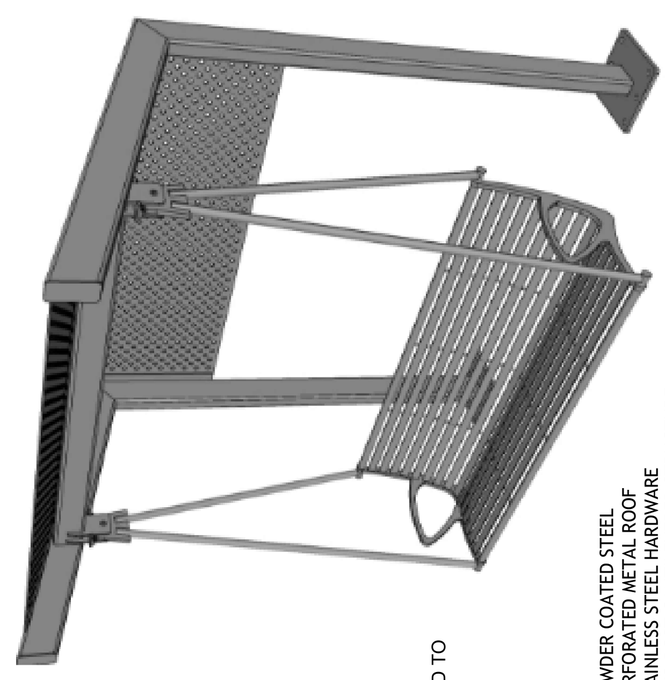

POWDER COATED STEEL
PERFORATED METAL ROOF
STAINLESS STEEL HARDWARE
TWO POST CANTILEVERED STRUCTURE

5 SCULPTURAL SWING ELEMENT - BASIS OF DESIGN
NTS

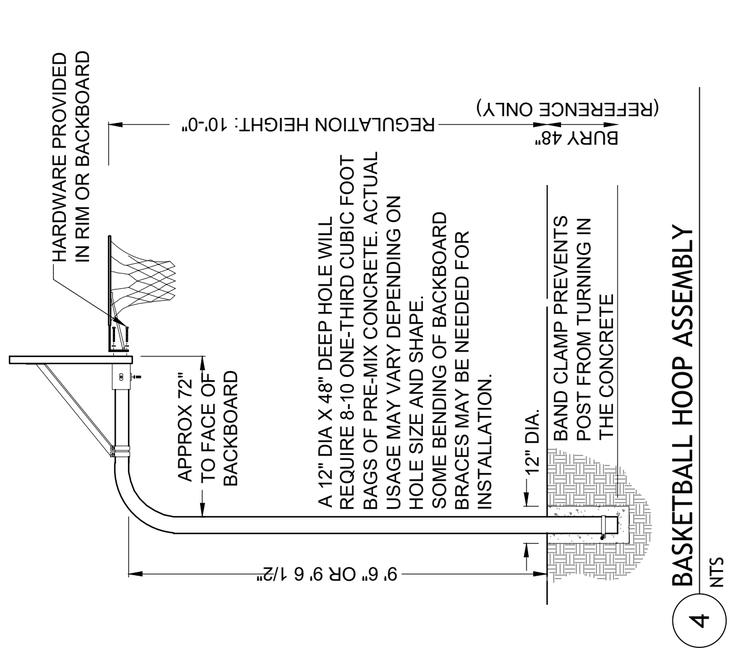

4 BASKETBALL HOOP ASSEMBLY
NTS

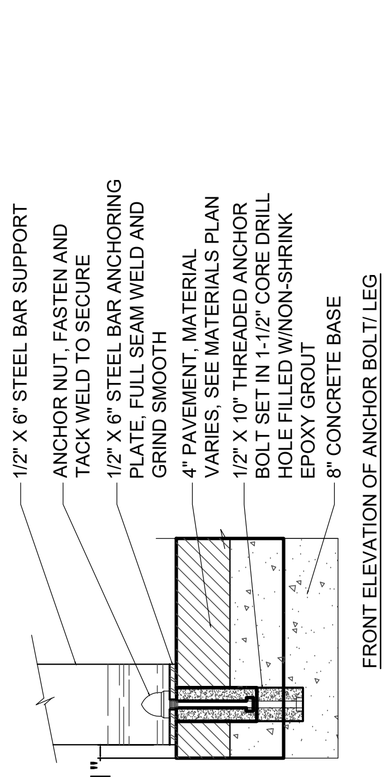

FRONT ELEVATION OF ANCHOR BOLT/ LEG

1 SITE IMPROVEMENTS ANCHOR
1 1/2" = 1'-0"

2 BICYCLE RACK
1" = 1'-0"

3 LANDSCAPE BOULDER
1 1/2" = 1'-0"

FOR PERMITTING PURPOSES - NOT FOR CONSTRUCTION

LAWRENCE
LMRC RAIL TRAIL

STATE	FED. AID PROJ. NO.	SHEET NO.	TOTAL SHEETS
MA	-	122	225
PROJECT FILE NO.	608930		

LANDSCAPE DETAILS - 16 OF 17

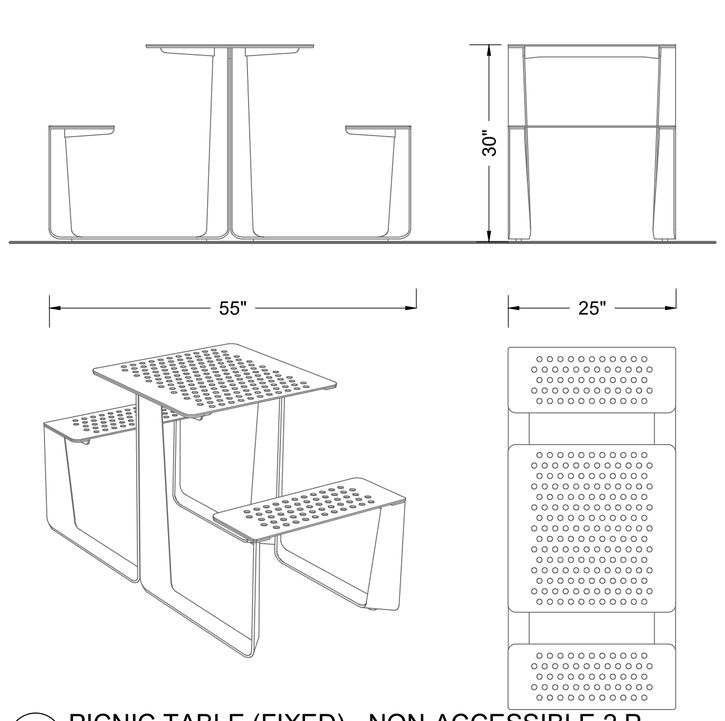

1 PICNIC TABLE (FIXED) - NON-ACCESSIBLE 2 P
NTS

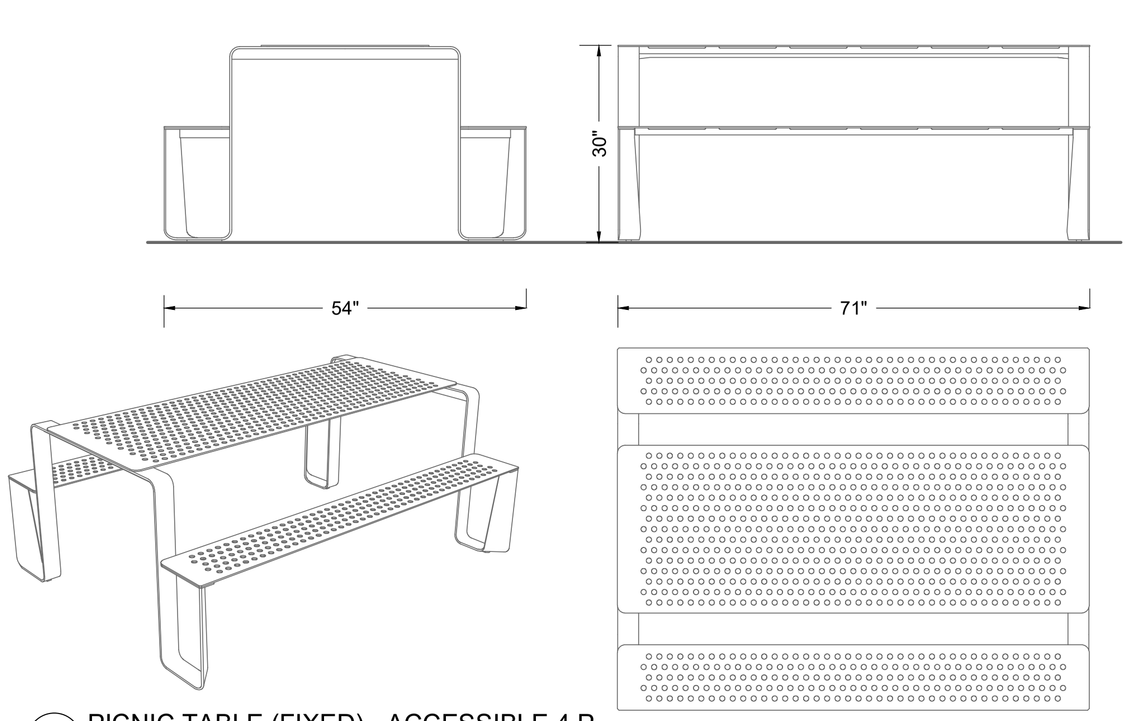

3 PICNIC TABLE (FIXED) - ACCESSIBLE 4 P
NTS

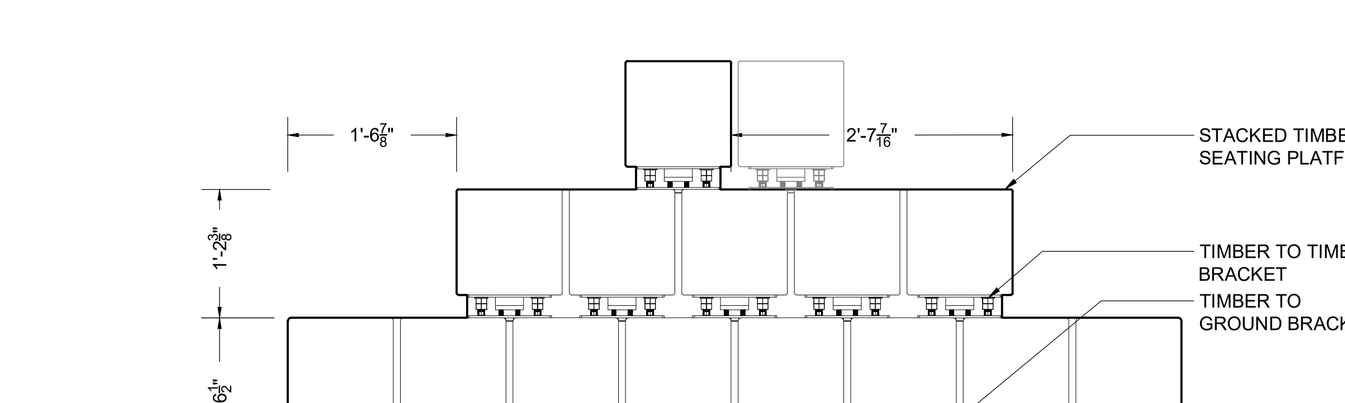

5 STACKED TIMBER SEATING STRUCTURE
NTS

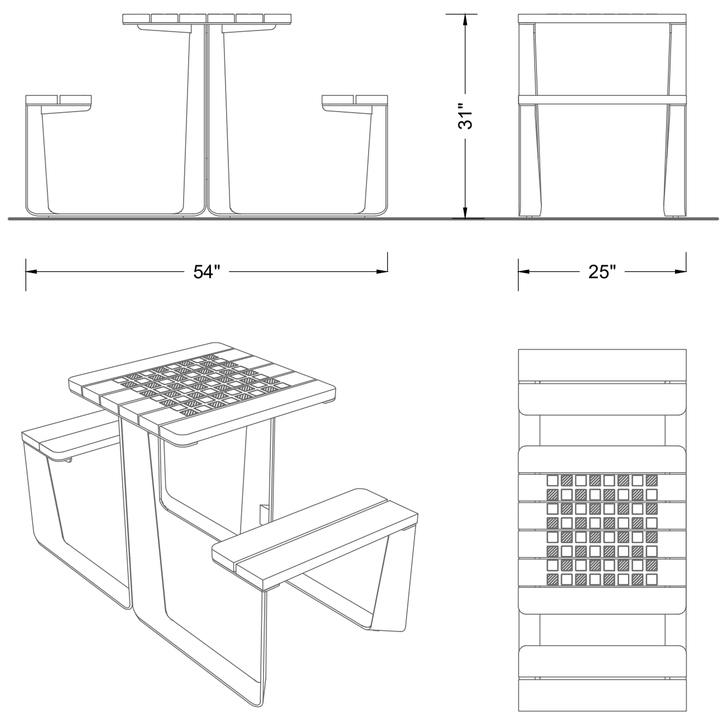

2 2 PERSON GAMING TABLE AND CHAIRS (FIXED)
NTS

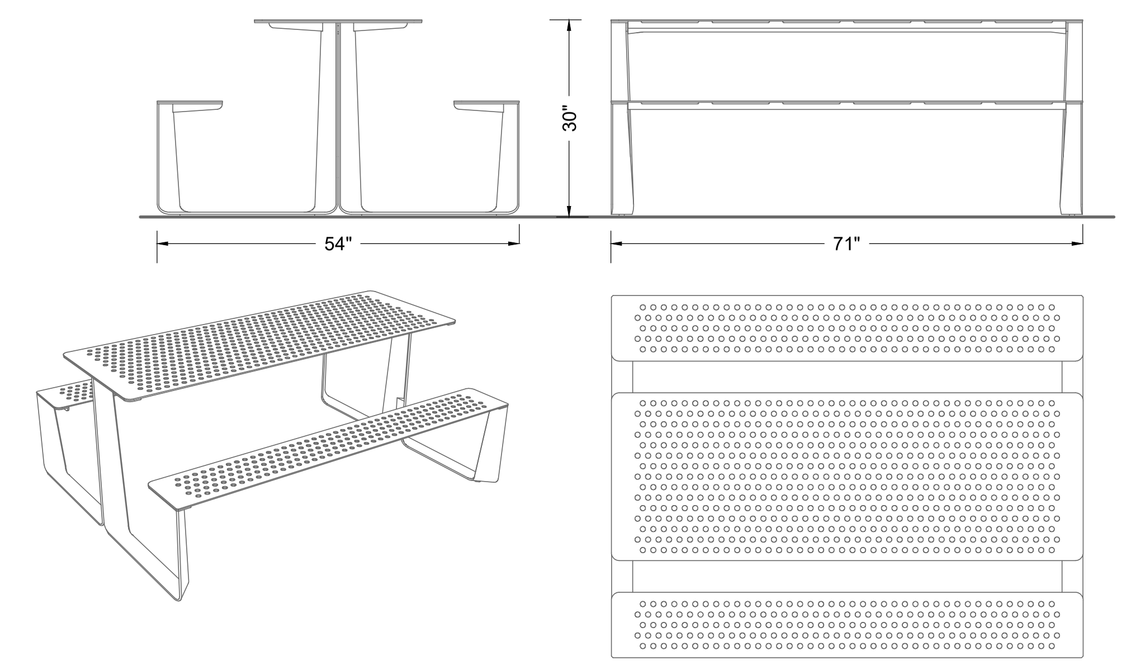

4 PICNIC TABLE (FIXED) - NON ACCESSIBLE 4 P
NTS

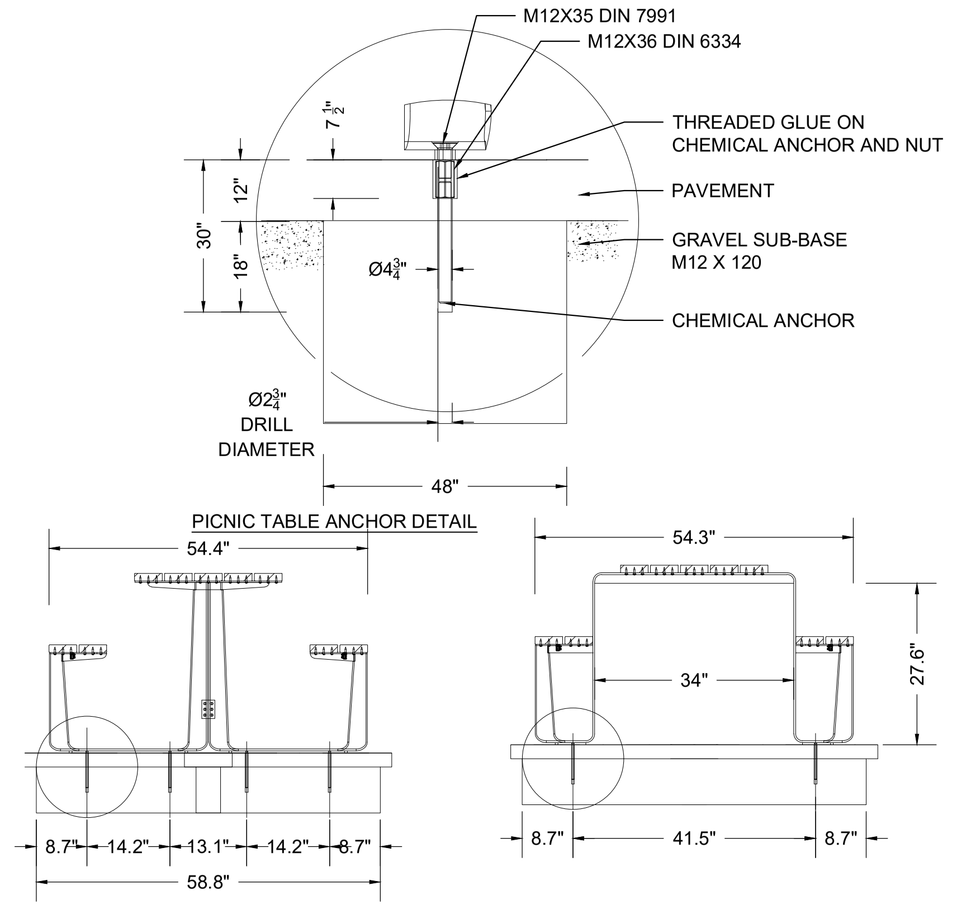

6 TABLE MOUNTING DETAIL
NTS

FOR PERMITTING PURPOSES - NOT FOR CONSTRUCTION

LANDSCAPE_DETAILS.DWG Plotted on 28-Oct-2022 3:23 PM

Proposal No. 608930-128034

A00869 - 141

LAWRENCE
LMRC RAIL TRAIL

STATE	FED. AID PROJ. NO.	SHEET NO.	TOTAL SHEETS
MA	-	123	225
PROJECT FILE NO.	608930		

LANDSCAPE DETAILS - 17 OF 17

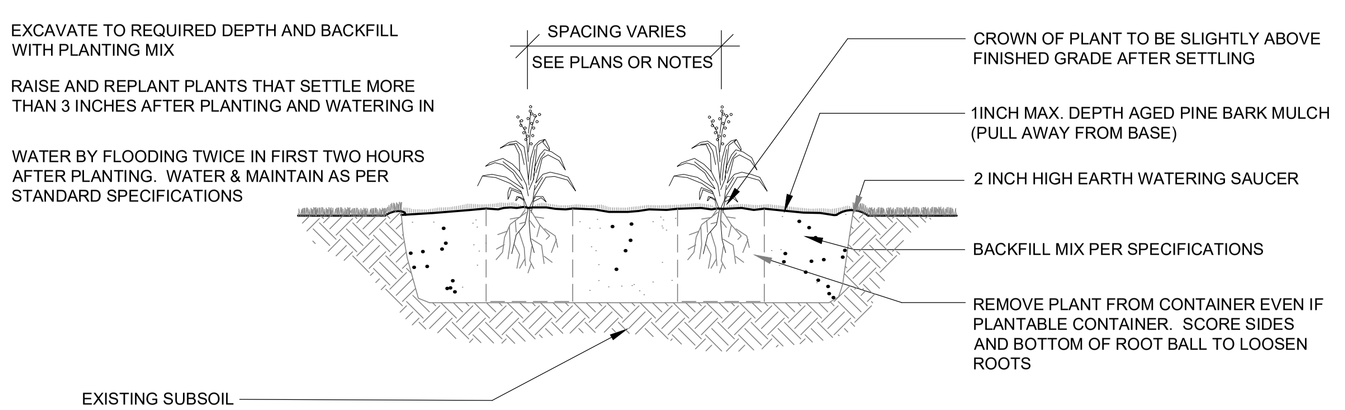

PERENNIAL PLANTING

NOT TO SCALE

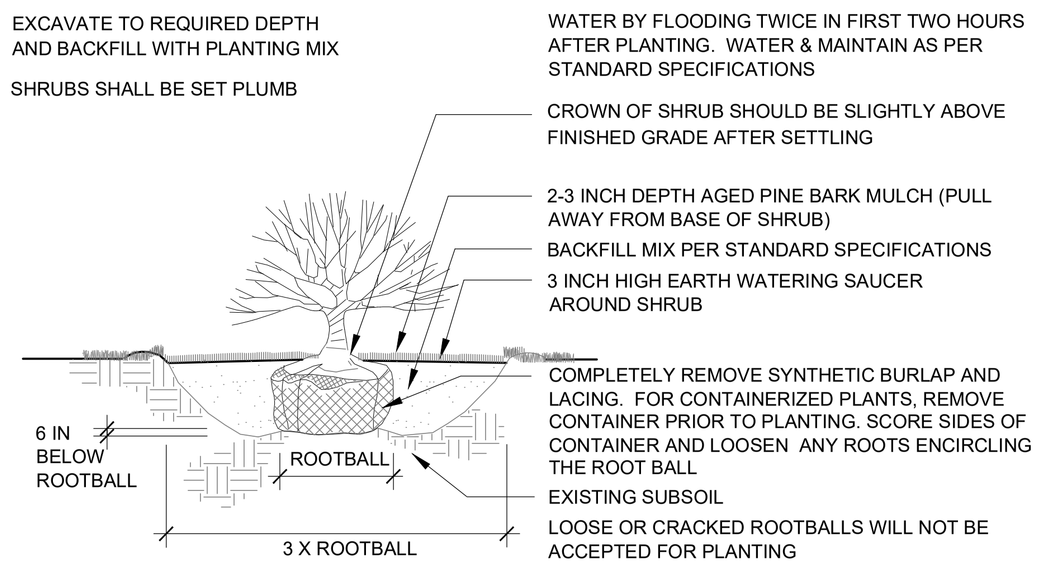

SHRUB PLANTING

NOT TO SCALE

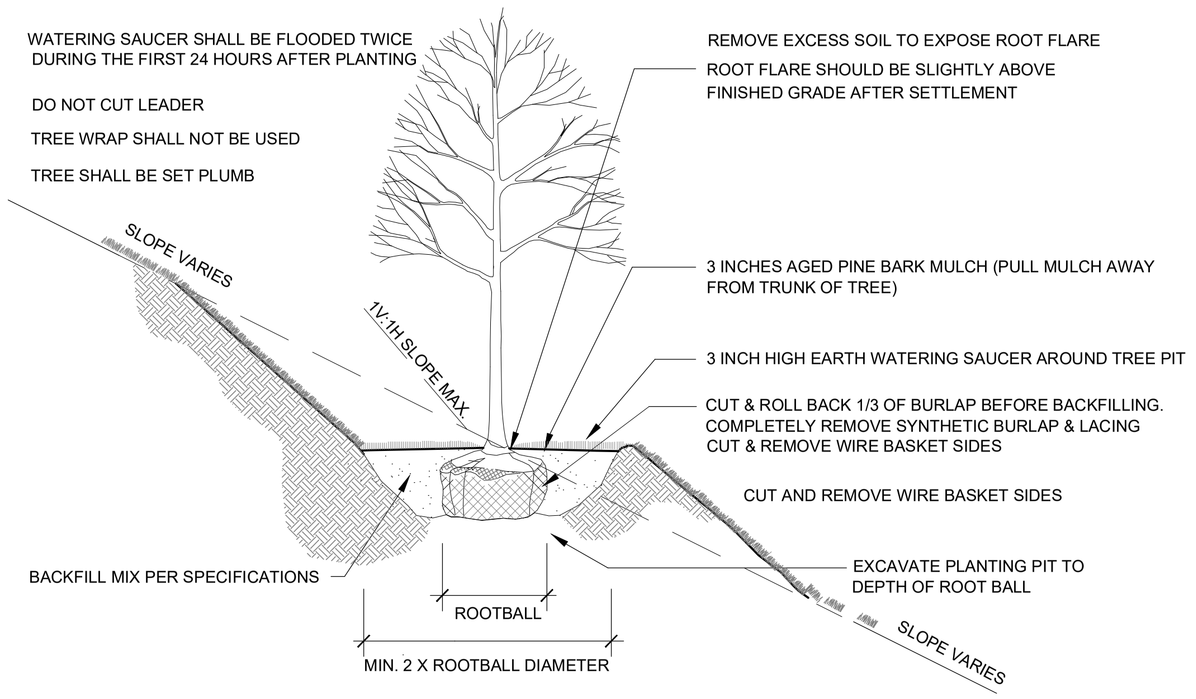

DECIDUOUS TREE PLANTING (SLOPE)

NOT TO SCALE

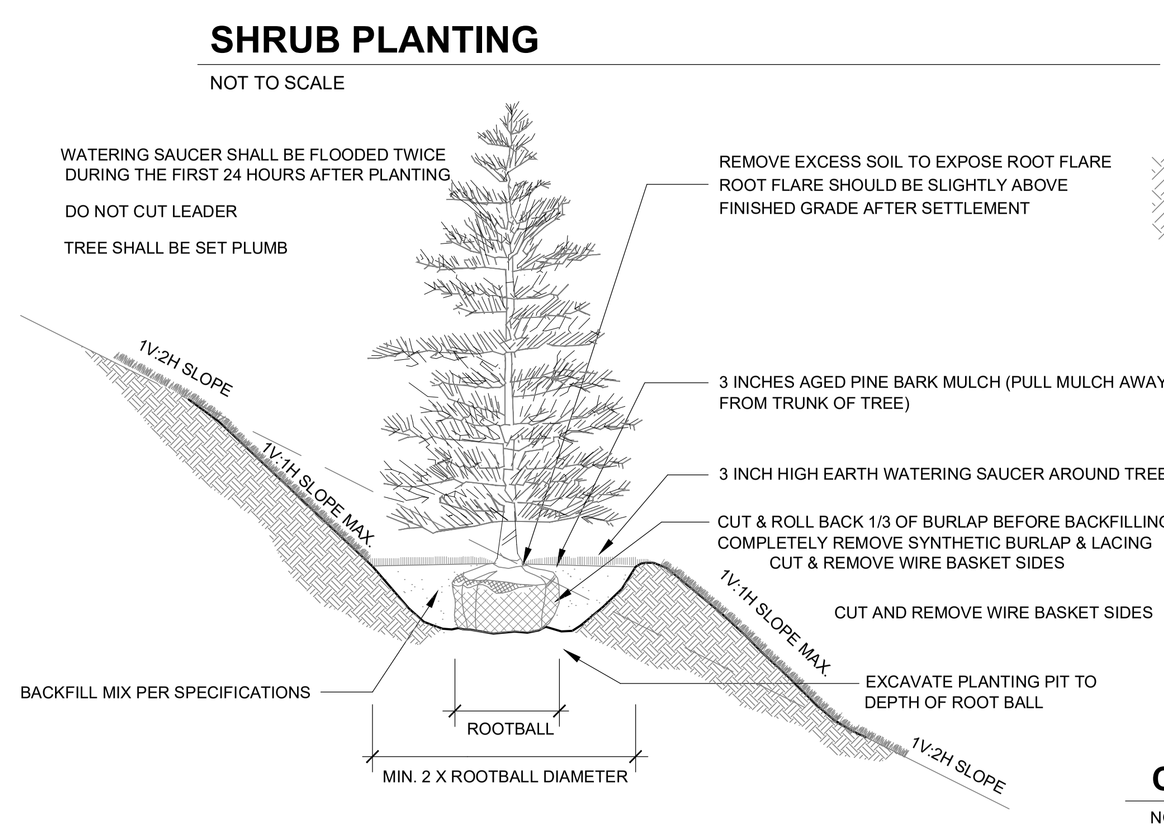

EVERGREEN TREE PLANTING (SLOPE)

NOT TO SCALE

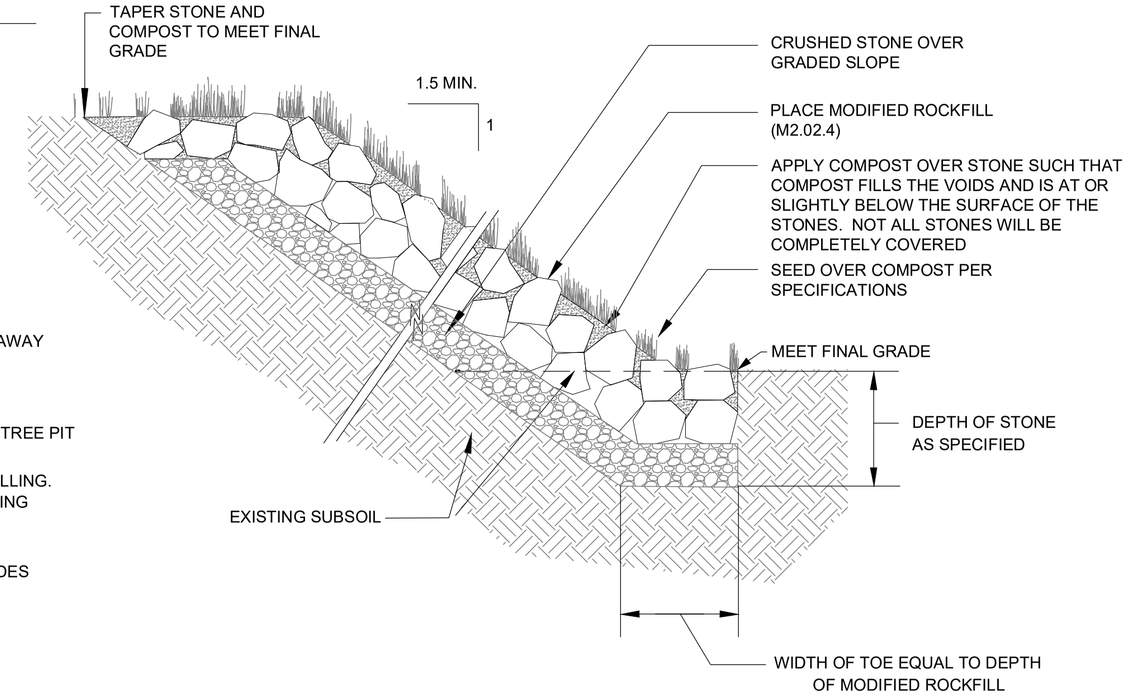

COMPOST AND SEED OVER MODIFIED ROCKFILL (NON-WATERWAY)

NOT TO SCALE

20160320_MassDOT

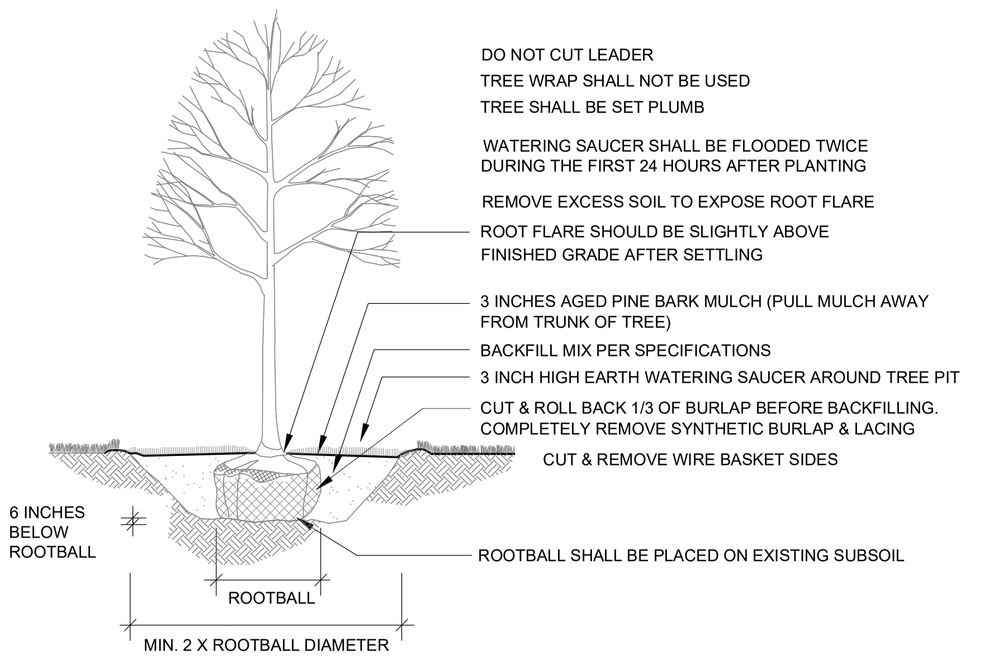

DECIDUOUS TREE PLANTING

NOT TO SCALE

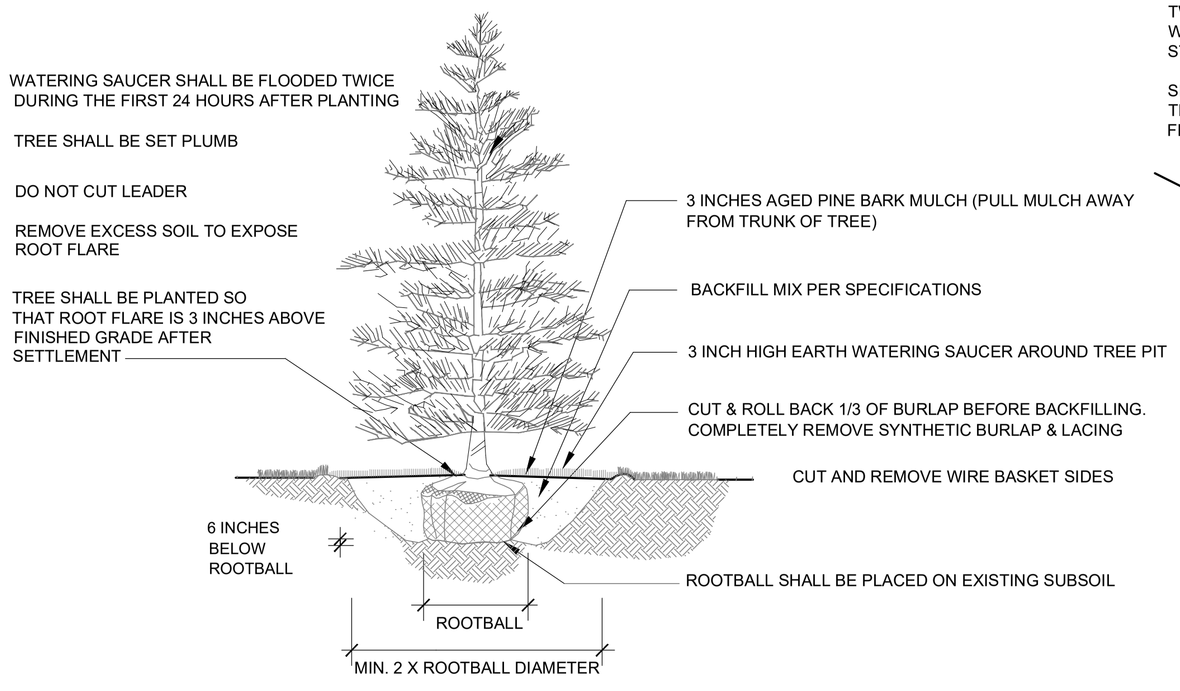

EVERGREEN TREE PLANTING

NOT TO SCALE

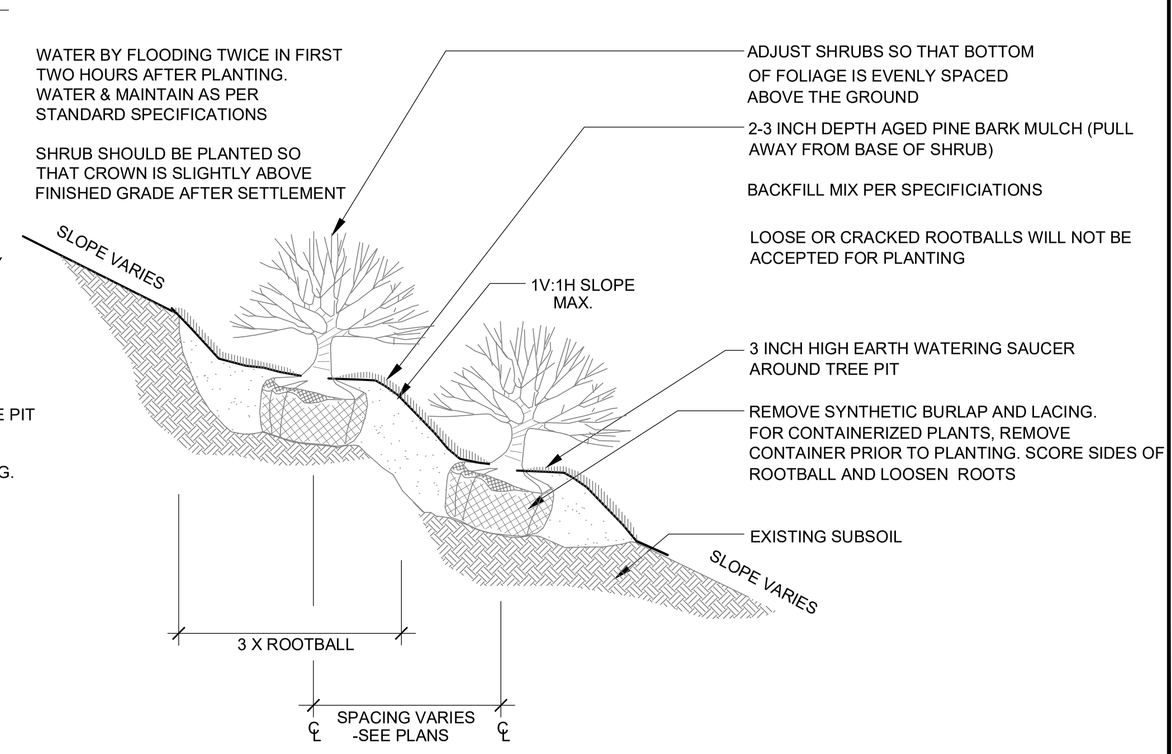

CONTAINERIZED SHRUB PLANTING (SLOPE) DETAIL

NOT TO SCALE

608930_HD10(CONSTRUCTION DETAILS).DWG Plotted on 28-Oct-2022 4:29 PM

Proposal No. 608930-128034

A00869 - 143

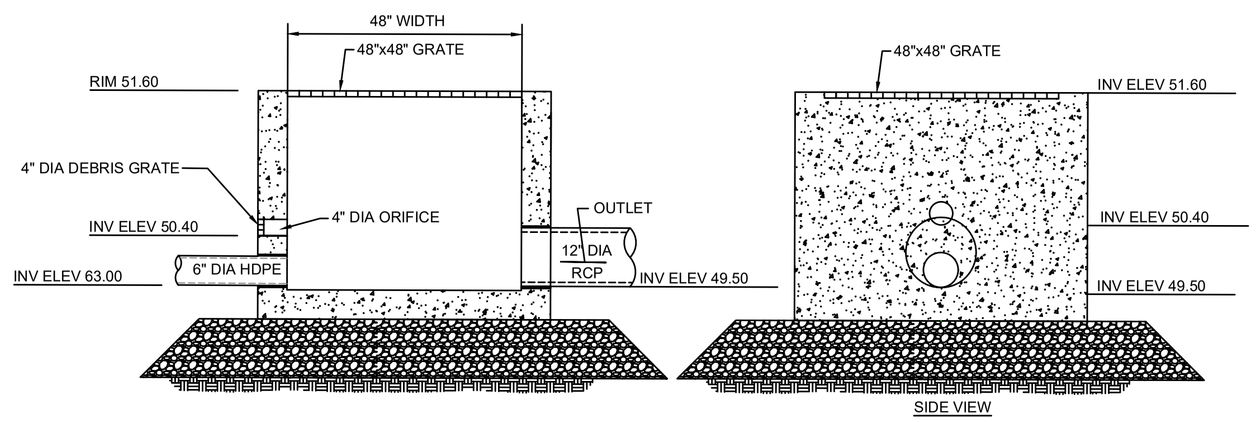

NOTES:
1. STRUCTURE SHALL BE 48"x48" (INNER DIMENSIONS) PRECAST CONCRETE BOX STRUCTURE
2. ALL SECTIONS SHALL BE DESIGNED FOR HS-20 LOADING.
3. PROVIDE "V" KNOCKOUTS FOR PIPES WITH 2" MAX CLEARANCE TO OUTSIDE OF PIPE. MORTAR ALL PIPE CONNECTIONS.
4. JOINT SEALANT BETWEEN PRECAST SECTIONS SHALL BE PREFORMED BUTYL RUBBER.

OUTLET CONTROL STRUCTUE 5 (OCS 5) DETAIL

N.T.S.

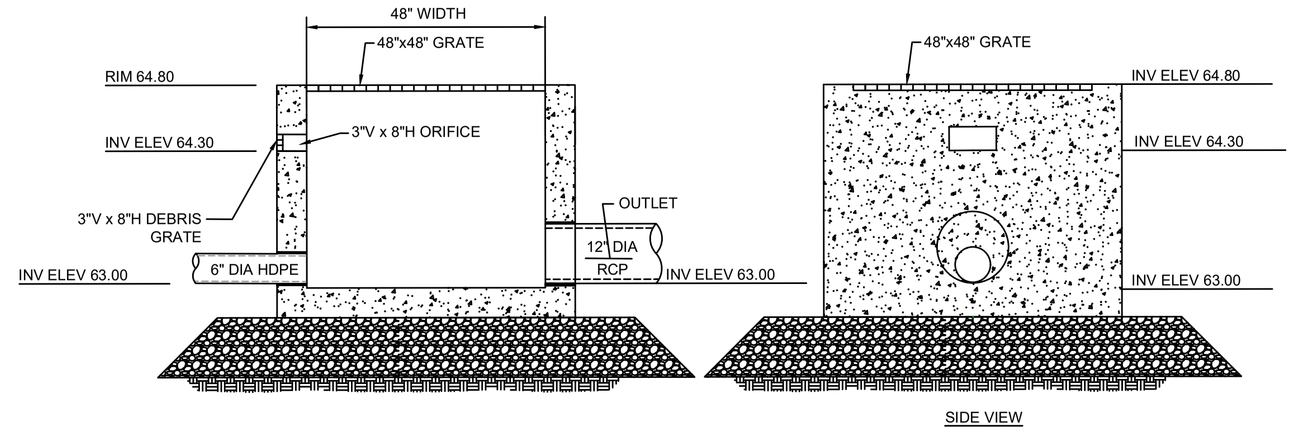

NOTES:
1. STRUCTURE SHALL BE 48"x48" (INNER DIMENSIONS) PRECAST CONCRETE BOX STRUCTURE
2. ALL SECTIONS SHALL BE DESIGNED FOR HS-20 LOADING.
3. PROVIDE "V" KNOCKOUTS FOR PIPES WITH 2" MAX CLEARANCE TO OUTSIDE OF PIPE. MORTAR ALL PIPE CONNECTIONS.
4. JOINT SEALANT BETWEEN PRECAST SECTIONS SHALL BE PREFORMED BUTYL RUBBER.

OUTLET CONTROL STRUCTUE 9 (OCS 9) DETAIL

N.T.S.

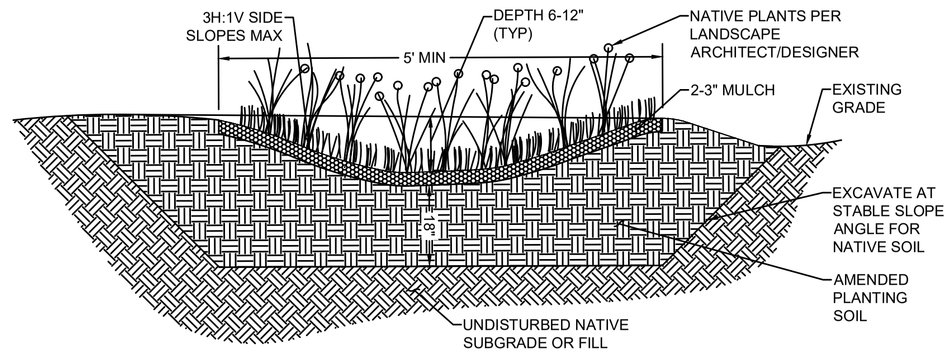

DRAINAGE SWALE DETAIL

N.T.S.

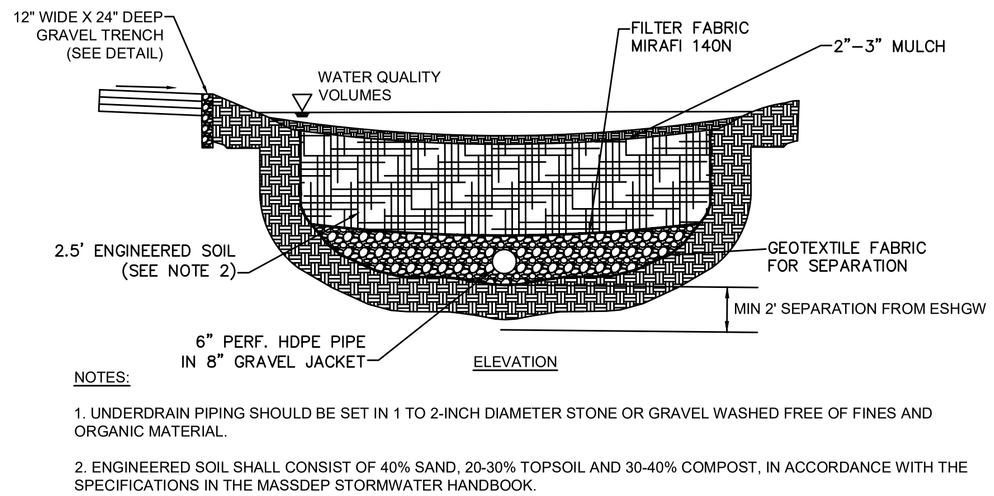

NOTES:

1. UNDERDRAIN PIPING SHOULD BE SET IN 1 TO 2-INCH DIAMETER STONE OR GRAVEL WASHED FREE OF FINES AND ORGANIC MATERIAL.

2. ENGINEERED SOIL SHALL CONSIST OF 40% SAND, 20-30% TOPSOIL AND 30-40% COMPOST, IN ACCORDANCE WITH THE SPECIFICATIONS IN THE MASSDEP STORMWATER HANDBOOK.

BIORETENTION BASIN LAYOUT

N.T.S.

NOTE:
KEY STONE INTO CHANNEL BANKS AND EXTEND IT BEYOND THE ABUTMENTS A MINIMUM OF 18" TO PREVENT FLOW AROUND THE DAM.

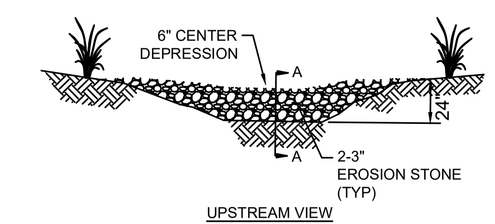

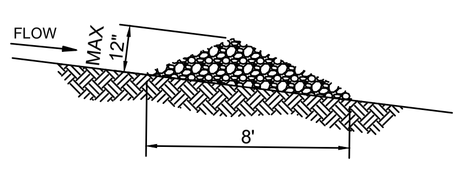

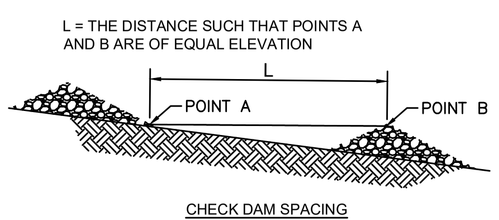

STONE CHECK DAM

N.T.S.

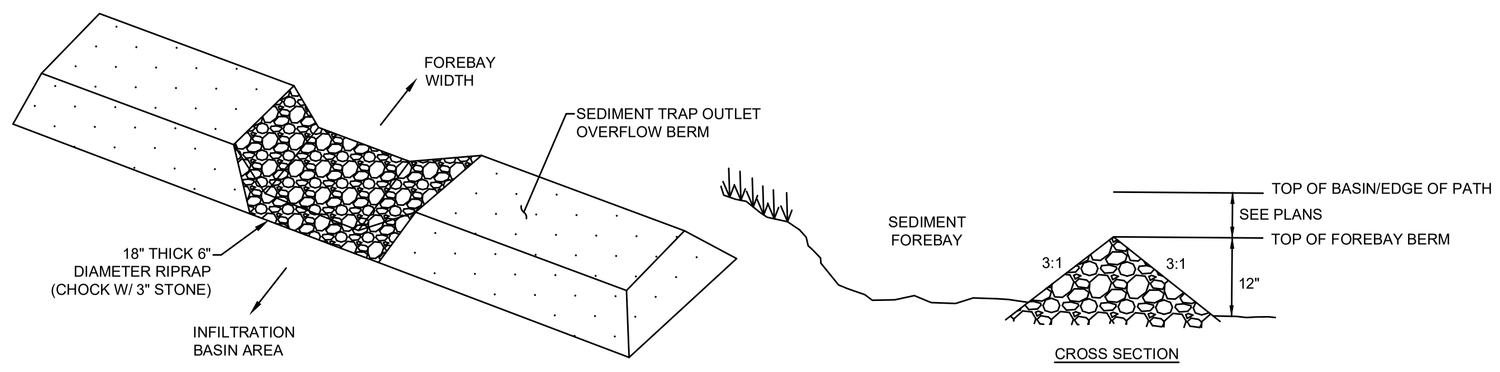

SEDIMENT FOREBAY OUTLET DETAIL

N.T.S.

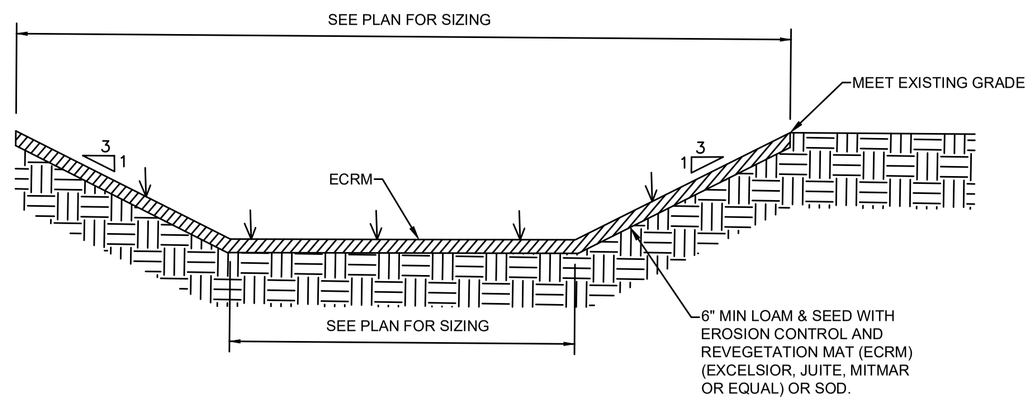

SEDIMENT FOREBAY TYPICAL CROSS SECTION

N.T.S.

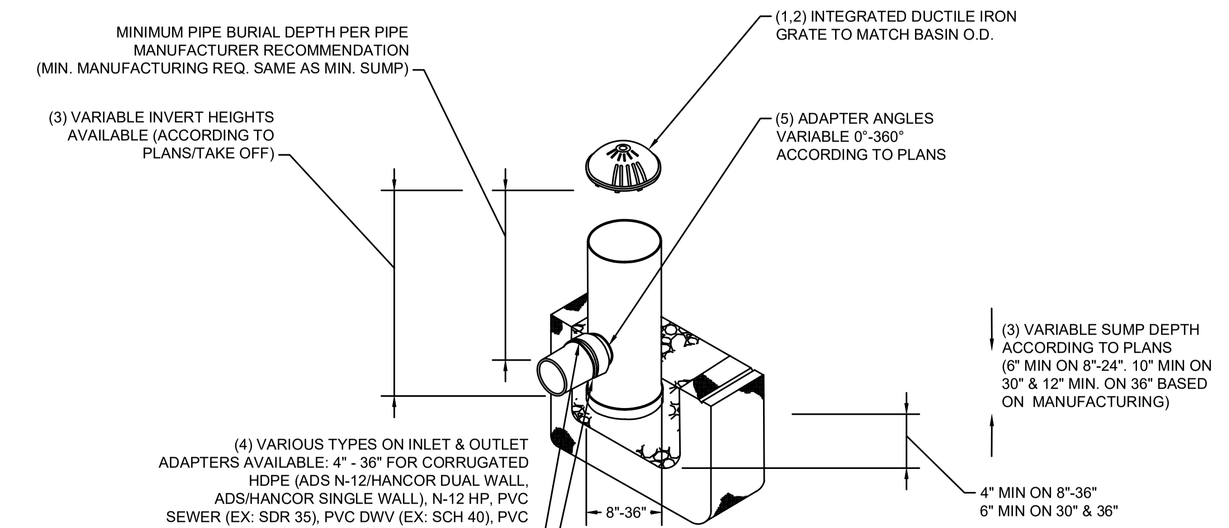

NOTES:
1. 8"-30" DOME GRATES SHALL BE DUCTILE IRON PER ASTM A536 GRADE 70-50-05.
2. 8" & 10" DOME GRATES FIT ONTO THE DRAIN BASIN WITH THE USE OF A PCV BODY TOP. SEE DRAWING NO 7001-110-045.
3. DRAIN BASIN TO BE CUSTOM MANUFACTURED ACCORDING TO PLAN DETAILS. RISERS ARE NEEDED FOR BASINS OVER 84" DUE TO SHIPPING RESTRICTIONS. SEE DRAWING NO. 7001-110-065.
4. DRAINAGE CONNECTION STUB JOIN TIGHTNESS SHALL CONFORM TO ASTM D3212 FOR CORRUGATED HDPE (ADS M-12/HANCOR DUAL WALL), N-12 HP, & PVC SEWER (4"-36")
5. ADAPTERS CAN BE MOUNTED ON ANY ANGLE 0° TO 360°. TO DETERMINE MINIMUM ANGLE BETWEEN ADAPTERS SEE DRAWING NO. 7001-110-012.
6. 8"-30" DOME GRATES HAVE NO LOAD RATING.

"BEEHIVE" DRAIN (OCS 10) DETAIL

N.T.S.

608930_HD10(CONSTRUCTION DETAILS).DWG Plotted on 28-Oct-2022 4:30 PM

Proposal No. 608930-128034

A00869 - 144

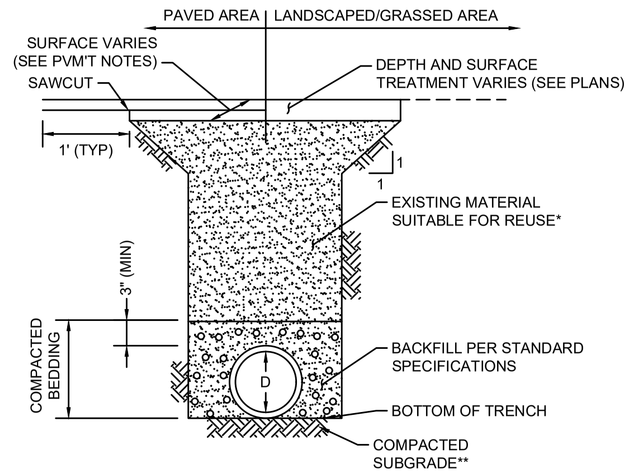

NOTES:

* EXISTING MATERIAL OBTAINED FROM EXCAVATION THAT IS DETERMINED TO BE SUITABLE, AND APPROVED BY THE ENGINEER SHALL BE USED. BACKFILL SHALL BE PLACED IN LAYERS NO MORE THAN 6" IN DEPTH AND THOROUGHLY COMPACTED. BACKFILLING TO A POINT 2' OVER THE PIPE SHALL CONTAIN NO STONES LARGER THAN 3".

**SOFT OR UNSUITABLE MATERIAL EXISTING BELOW THE REQUIRED BEDDING GRADE SHALL BE REMOVED AS DIRECTED AND REPLACED WITH SAND, GRAVEL, CRUSHED STONE OR OTHER SUITABLE MATERIAL AND THOROUGHLY COMPACTED.

UTILITY TRENCH

N.T.S.

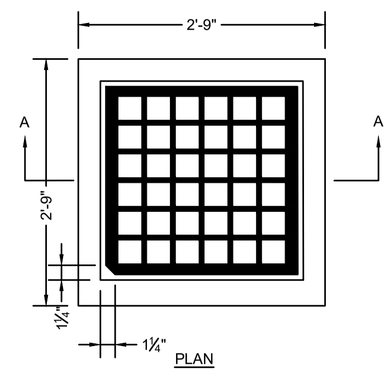

NOTES:

1. FRAME AND COVER SHALL BE RATED FOR HL-93 LOADING.
2. MATERIAL - CAST IRON.
3. MINIMUM FRAME WEIGHT:
   4 FLANGE - 295 LB
   3 FLANGE - 264 LB

CATCH BASIN FRAME & GRATE (MUNICIPAL STANDARD)

N.T.S.

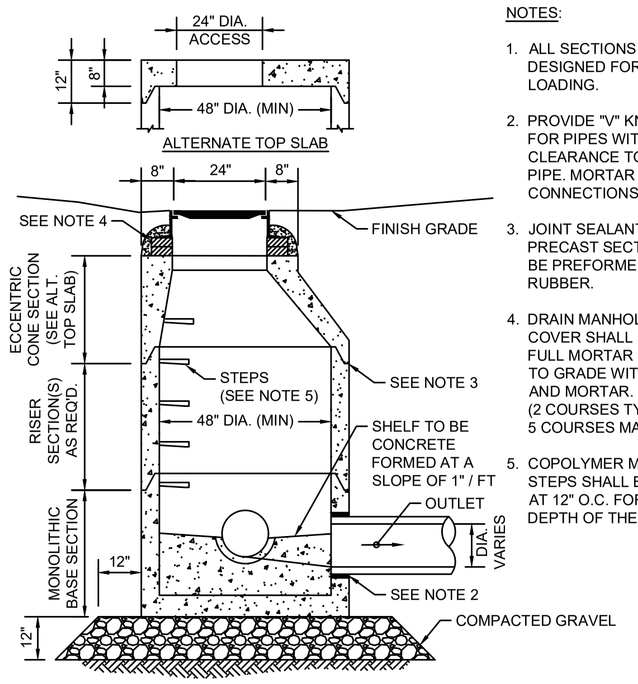

NOTES:

1. ALL SECTIONS SHALL BE DESIGNED FOR HL-93 LOADING.
2. PROVIDE "V" KNOCKOUTS FOR PIPES WITH 2" MAX CLEARANCE TO OUTSIDE OF PIPE. MORTAR ALL PIPE CONNECTIONS.
3. JOINT SEALANT BETWEEN PRECAST SECTIONS SHALL BE PREFORMED BUTYL RUBBER.
4. DRAIN MANHOLE FRAME AND COVER SHALL BE SET IN FULL MORTAR BED. ADJUST TO GRADE WITH CLAY BRICK AND MORTAR. (2 COURSES TYP 5 COURSES MAX)
5. COPOLYMER MANHOLE STEPS SHALL BE INSTALLED AT 12" O.C. FOR THE FULL DEPTH OF THE STRUCTURE.

DRAIN MANHOLE

N.T.S.

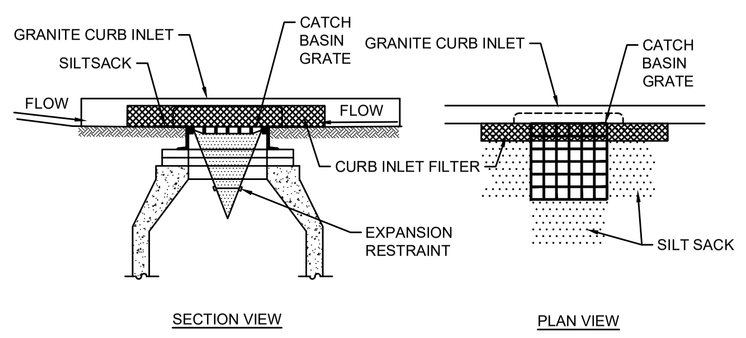

NOTES:

1. INSTALL SILT SACK IN EXISTING CATCH BASINS BEFORE COMMENCING WORK, AND IN NEW CATCH BASINS IMMEDIATELY AFTER INSTALLATION OF STRUCTURE. MAINTAIN UNTIL BINDER COURSE PAVING IS COMPLETE OR A PERMANENT STAND OF GRASS HAS BEEN ESTABLISHED.
2. GRATE TO BE PLACED OVER SILT SACK.
3. SILT SACK SHALL BE INSPECTED PERIODICALLY AND AFTER ALL STORM EVENTS AND CLEANING OR REPLACEMENT SHALL BE PERFORMED PROMPTLY AS NEEDED.

INLET PROTECTION SILT SACK IN CATCH BASIN WITH CURB INLET

N.T.S.

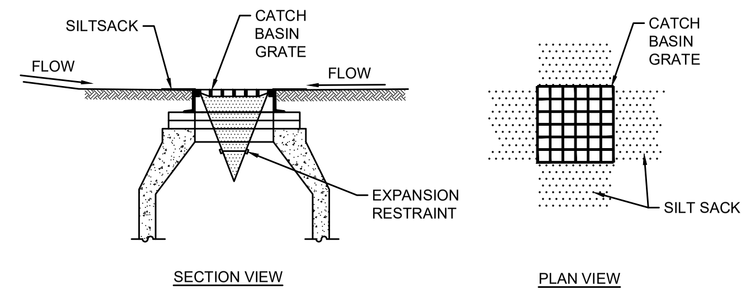

NOTES:

1. INSTALL SILT SACK IN EXISTING CATCH BASINS BEFORE COMMENCING WORK, AND IN NEW CATCH BASINS IMMEDIATELY AFTER INSTALLATION OF STRUCTURE. MAINTAIN UNTIL BINDER COURSE PAVING IS COMPLETE OR A PERMANENT STAND OF GRASS HAS BEEN ESTABLISHED.
2. GRATE TO BE PLACED OVER SILT SACK.
3. SILT SACK SHALL BE INSPECTED PERIODICALLY AND AFTER ALL STORM EVENTS AND CLEANING OR REPLACEMENT SHALL BE PERFORMED PROMPTLY AS NEEDED.

INLET PROTECTION SILT SACK IN CATCH BASIN

N.T.S.

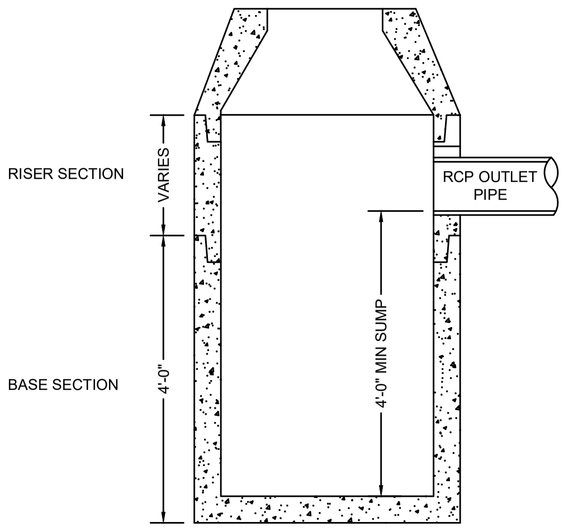

NOTE:

ALL CATCH BASINS SHALL CONFORM TO MASSDOT CONSTRUCTION STANDARD E 201.4.0 EXCEPT FOR 4' SUMP DEPTH AS SHOWN

DEEP SUMP CATCH BASIN

N.T.S.

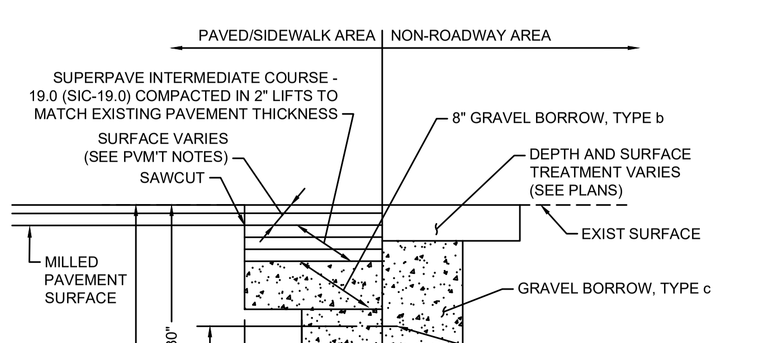

NOTES:

* SOFT OR UNSUITABLE MATERIAL EXISTING BELOW THE REQUIRED BEDDING GRADE SHALL BE REMOVED AS DIRECTED AND REPLACED WITH SAND, GRAVEL, CRUSHED STONE OR OTHER SUITABLE MATERIAL AND THOROUGHLY COMPACTED.

CONDUIT TRENCH

N.T.S.

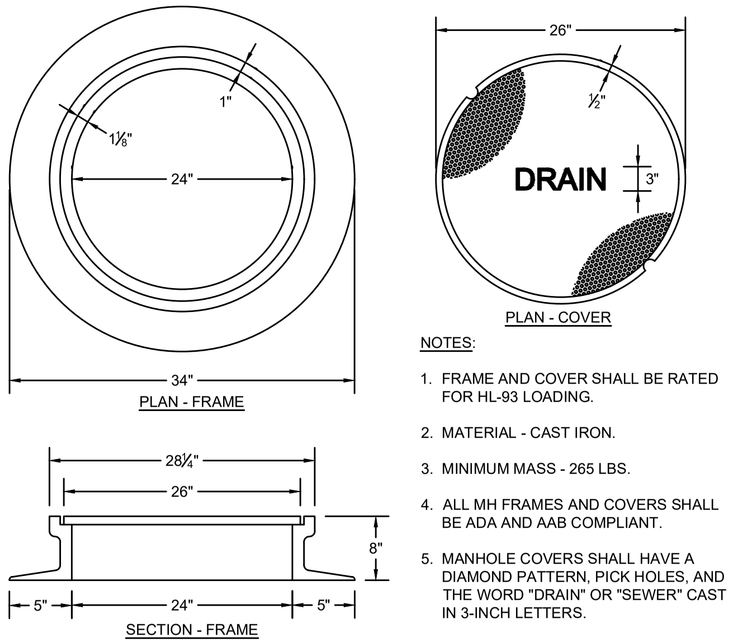

NOTES:

1. FRAME AND COVER SHALL BE RATED FOR HL-93 LOADING.
2. MATERIAL - CAST IRON.
3. MINIMUM MASS - 265 LBS.
4. ALL MH FRAMES AND COVERS SHALL BE ADA AND AAB COMPLIANT.
5. MANHOLE COVERS SHALL HAVE A DIAMOND PATTERN, PICK HOLES, AND THE WORD "DRAIN" OR "SEWER" CAST IN 3-INCH LETTERS.

MANHOLE FRAME & COVER

N.T.S.

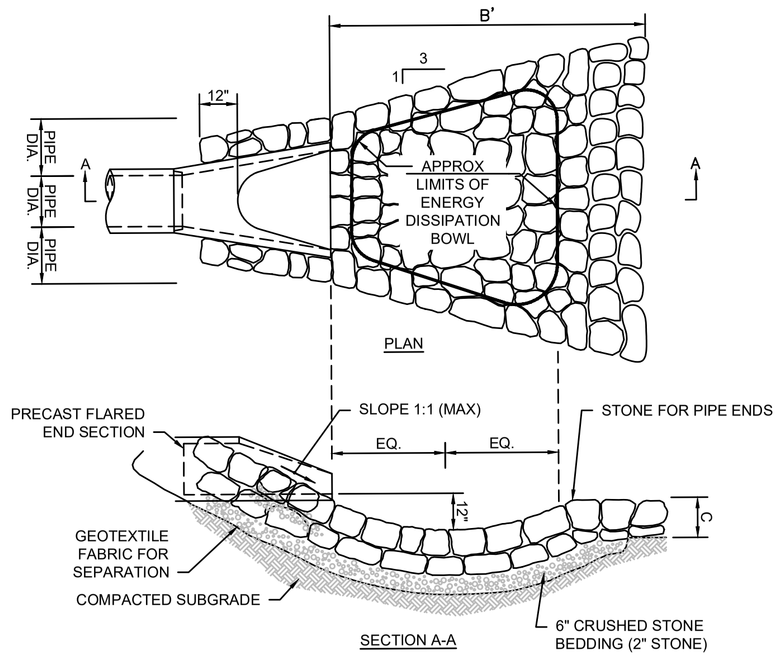

NOTE:
SEE PLANS FOR STONE LENGTH AND DEPTH

STONE AT FLARED END SECTION

N.T.S.

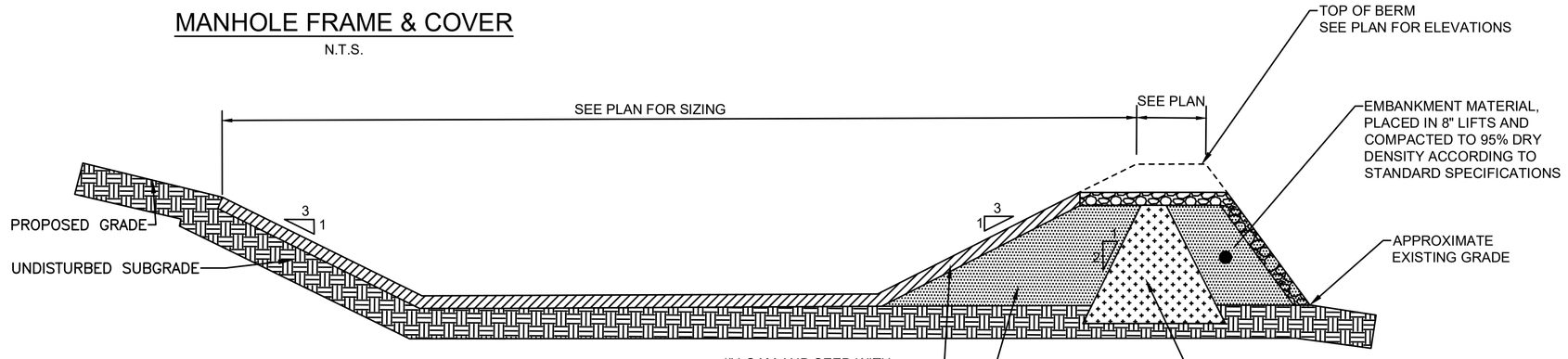

BERM MATERIALS (SEE SPECIAL NOTE BELOW)

1) IMPERVIOUS CORE (CLAY SILT & SAND SHALL CONFORM TO AASHTO T27 HAVING A COEFFICIENT OF PERMEABILITY OF 1 X 10 CM/SEC AND MEET THE GRADATION AS FOLLOWS: ROLLED TO 6 LAYERS (95% COMPACTION)

PERCENT FINER	SIEVE SIZE
100	#4
30 TO 85	#40
20 TO 50	#200

2) FILTER LAYER F2
EMBANKMENT MATERIAL SHALL CONFORM TO AASHTO M57 AND MEET THE FOLLOWING GRADATION:

PERCENT FINER	SIEVE SIZE
100	3 IN.
95-100	2 IN.
55-85	1 IN.
27-52	#4
50 MAX	#40
25 MAX	#200

*** SPECIAL NOTE ***
SPECIAL MATERIALS 1, 2 AND ANTI-SEEP COLLARS CAN BE ELIMINATED AND REPLACED WITH GENERAL MATERIALS IN AREAS OF OVERALL EMBANKMENT CUT AND IN AREAS WHERE THE GEOTECHNICAL & CITY ENGINEERS DETERMINE THAT FIELD CONDITIONS DO NOT WARRANT THESE ITEMS.

INFILTRATION BASIN

N.T.S.

608930_HD10(CONSTRUCTION DETAILS).DWG Plotted on 28-Oct-2022 4:30 PM

Proposal No. 608930-128034

A00869 - 145

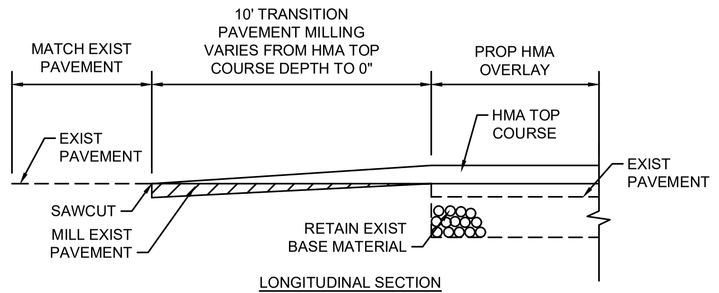

HMA OVERLAY TRANSITION
N.T.S.

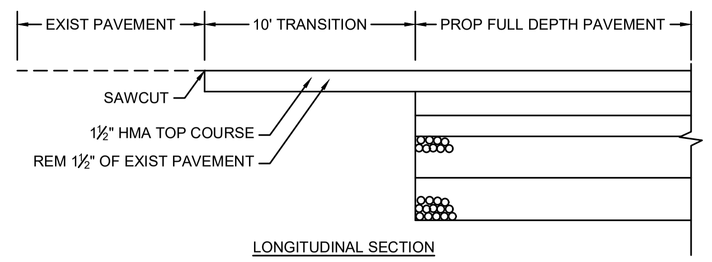

FULL DEPTH PAVEMENT TRANSITION
N.T.S.

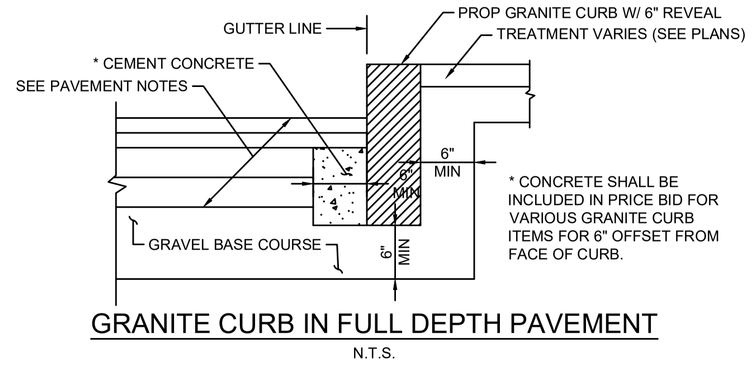

GRANITE CURB IN FULL DEPTH PAVEMENT
N.T.S.

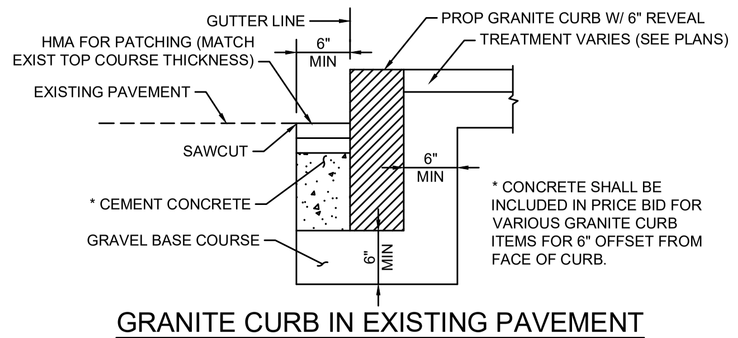

GRANITE CURB IN EXISTING PAVEMENT
N.T.S.

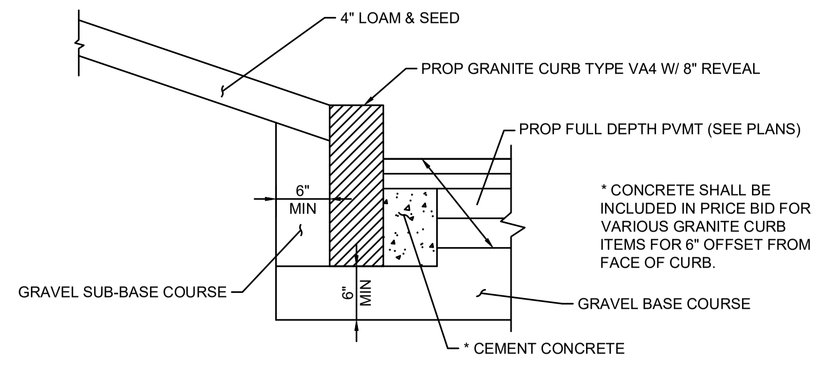

GRANITE BACK CURB
N.T.S.

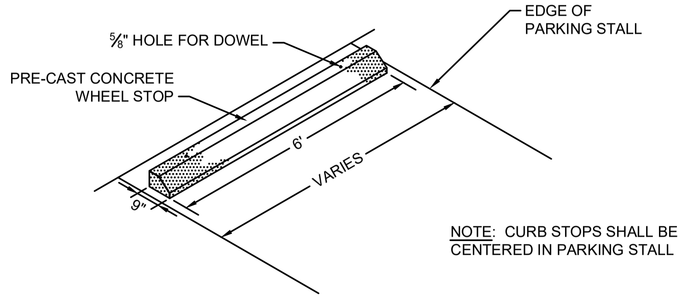

CONCRETE WHEEL STOP
N.T.S.

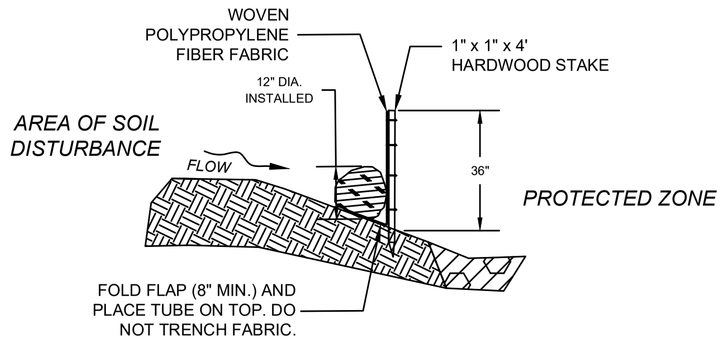

SECTION

COMPOST FILTER TUBE & SILT FENCE
N.T.S.

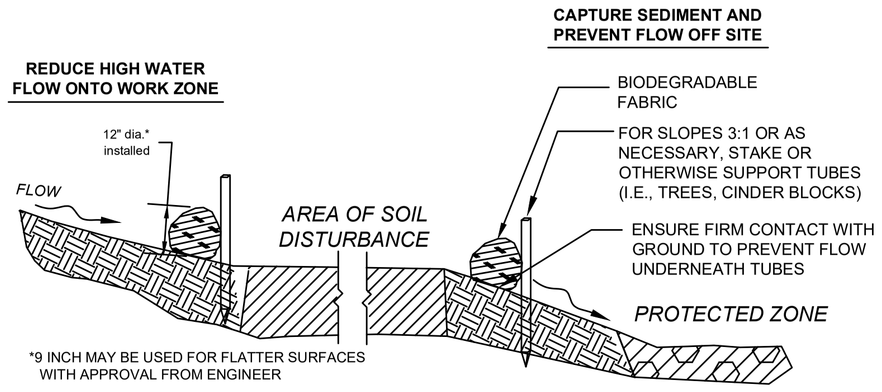

SECTION

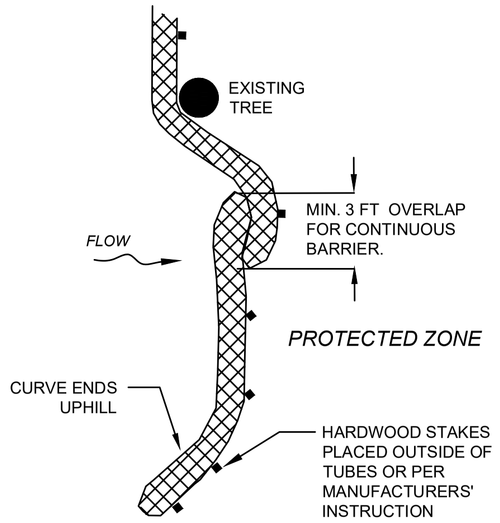

PLACE TUBE ALONG CONTOURS AND PERPENDICULAR TO FLOW.

PLACE AS CLOSE TO LIMIT OF SOIL DISTURBANCE AS POSSIBLE

ADJUST LOCATION AS REQUIRED FOR OPTIMUM EFFECTIVENESS. DO NOT INSTALL IN WATERWAYS.

PLACE STAKES AS NEEDED TO SECURE TUBES IN PLACE.

PLAN VIEW

SEDIMENT CONTROL BARRIER
N.T.S.

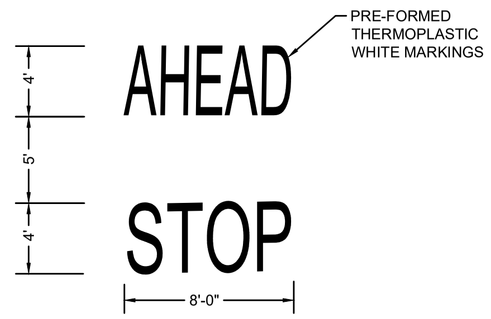

STOP AHEAD PAVEMENT MARKING
N.T.S.

RECTANGULAR RAPID FLASHING BEACON (RRFB)
N.T.S.

NOTES:
1. CROSSWALK AND ADA-COMPLIANT RAMPS NOT SHOWN. SEE PLANS FOR LOCATIONS.
2. REFER TO THE SPECIAL PROVISIONS FOR SIGN DIMENSIONS.
3. ACCESS TO ALL PEDESTRIAN ACTUATED CONTROLS SHALL BE ADA/AAB COMPLIANT
4. *0.5% CONSTRUCTION TOLERANCE FOR CROSS-SLOPE

MAJOR ITEMS LIST

2 CEMENT CONCRETE FOUNDATIONS PER 812.30.1
2 17' TRAFFIC SIGNAL POSTS & PEDESTALS
2 APS PUSHBUTTON SYSTEMS
2 DUAL RECTANGULAR YELLOW LED BEACONS IN NEMA ENCLOSURES
2 R10-25 SIGNS
4 W11-15 SIGNS
4 W11-15p SIGNS
2 W16-7pL SIGNS
2 W16-7pR SIGNS
2 SOLAR PANEL SYSTEMS
2 NEMA ENCLOSURES FOR ALL COMPONENTS NEEDED TO MEET FUNCTIONAL REQUIREMENTS PER SPECIAL PROVISIONS
2 BATTERY SYSTEMS

PLUS ALL MOUNTING AND SUPPORTING HARDWARE AND WIRING NECESSARY TO COMPLETE A WORKING SYSTEM.

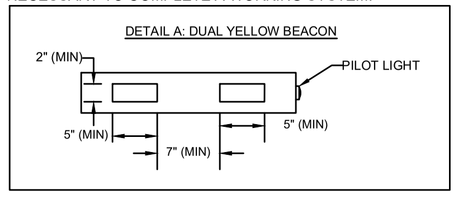

BICYCLE DETECTOR PAVEMENT MARKING
N.T.S.

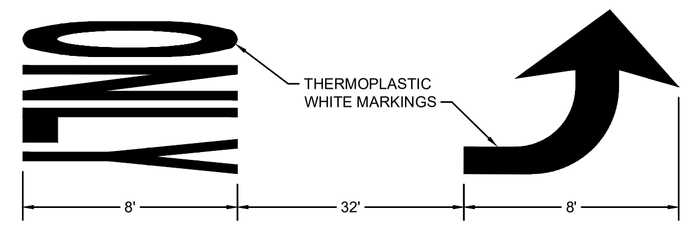

NOTE: SPACING SHALL BE SAME FOR RIGHT TURN LANE AND THRU ONLY PAVEMENT MARKING (REFER TO MASSDOT STANDARD DRAWING TR.6.1)

LEFT TURN LANE PAVEMENT MARKING
N.T.S.

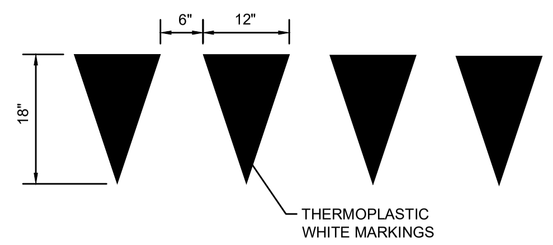

YIELD LINE PAVEMENT MARKING
N.T.S.

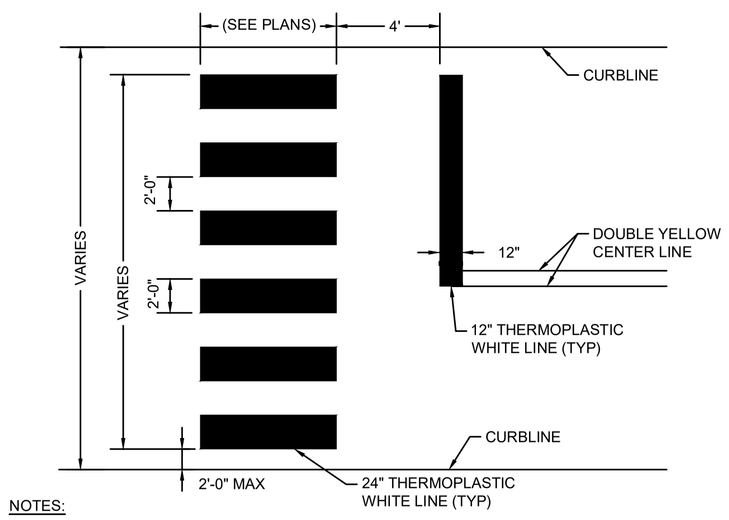

NOTES:
1. ALL 12" LINES SHALL BE APPLIED IN ONE APPLICATION. NO COMBINATION OF LINES (TWO - 6" LINES) WILL BE ACCEPTED. ALL 24" LINES MAY BE EITHER ONE 24" LINE OR A COMBINATION OF TWO - 12" LINES.
2. LAYOUT OF CROSSWALKS SHALL BE APPROVED BY THE ENGINEER PRIOR TO APPLICATION.
3. CROSSWALK BARS SHALL BE PLACED OUTSIDE THE VEHICULAR WHEEL PATH WHEREVER POSSIBLE.
4. OMIT STOP BAR WHERE NOT SHOWN ON TRAFFIC SIGN & PAVEMENT MARKING PLANS.

CROSSWALK PAVEMENT MARKING (LADDER); UNSIGNALIZED APPROACH
N.T.S.

STATE	FED. AID PROJ. NO.	SHEET NO.	TOTAL SHEETS
MA	-	127	225
PROJECT FILE NO.	608930		

CONSTRUCTION DETAILS - 4 OF 5

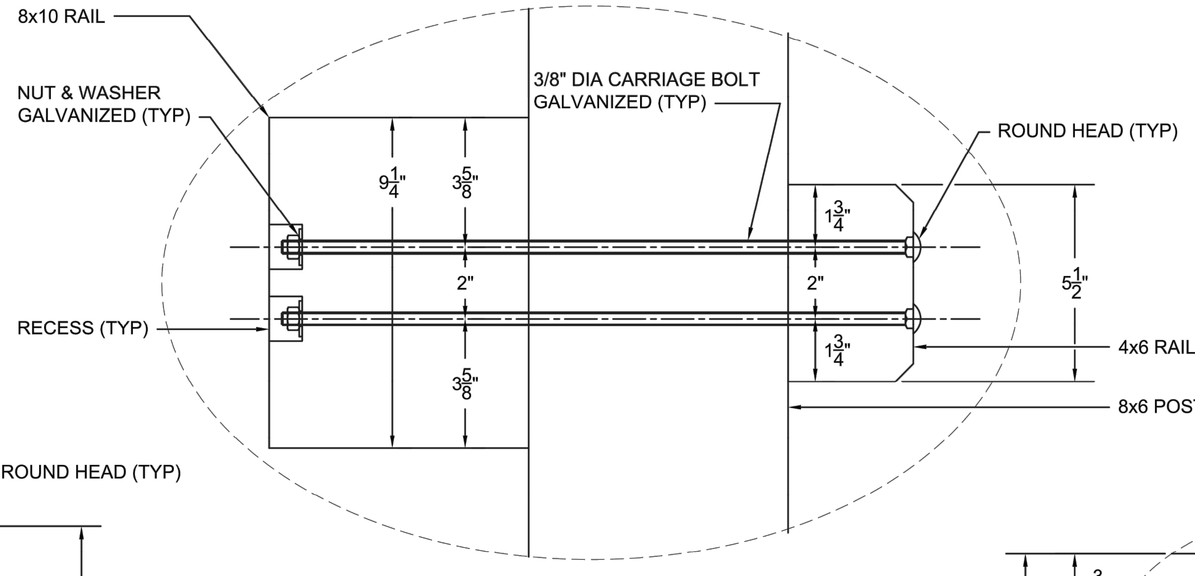

DETAIL B
NOT TO SCALE

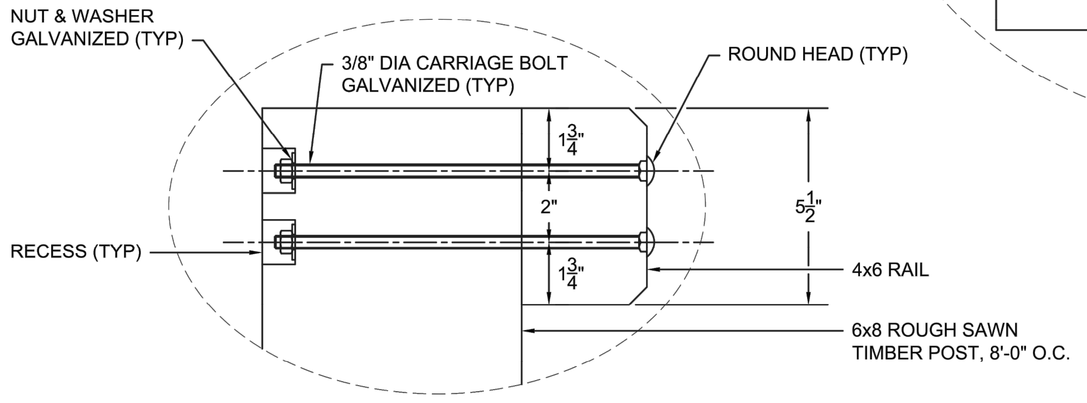

DETAIL A
NOT TO SCALE

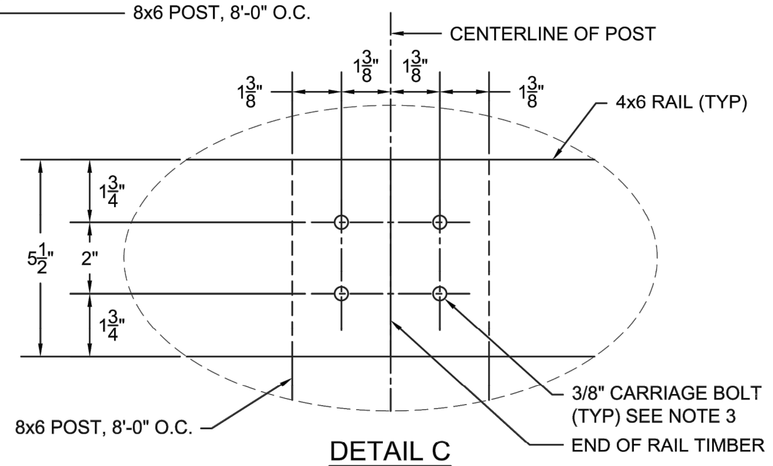

DETAIL C
NOT TO SCALE

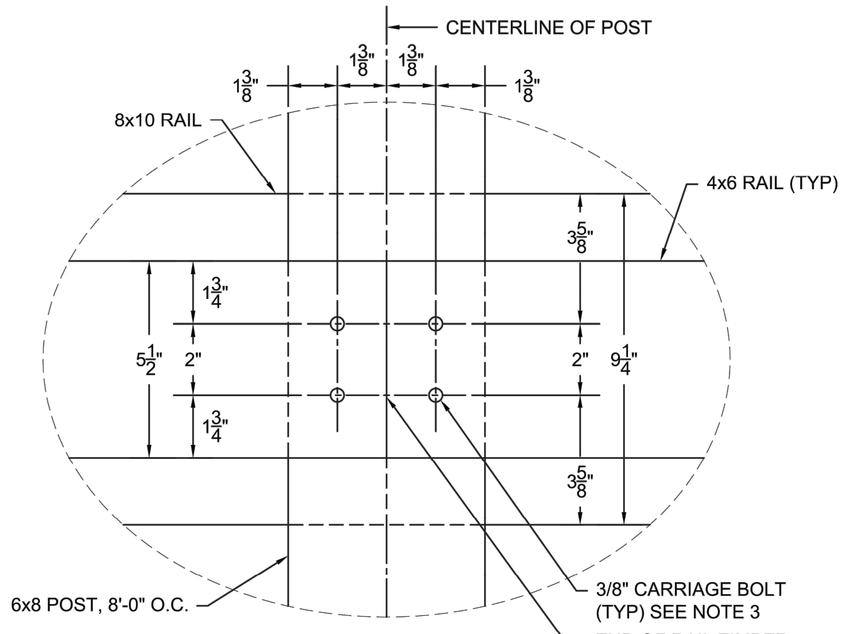

DETAIL D
NOT TO SCALE

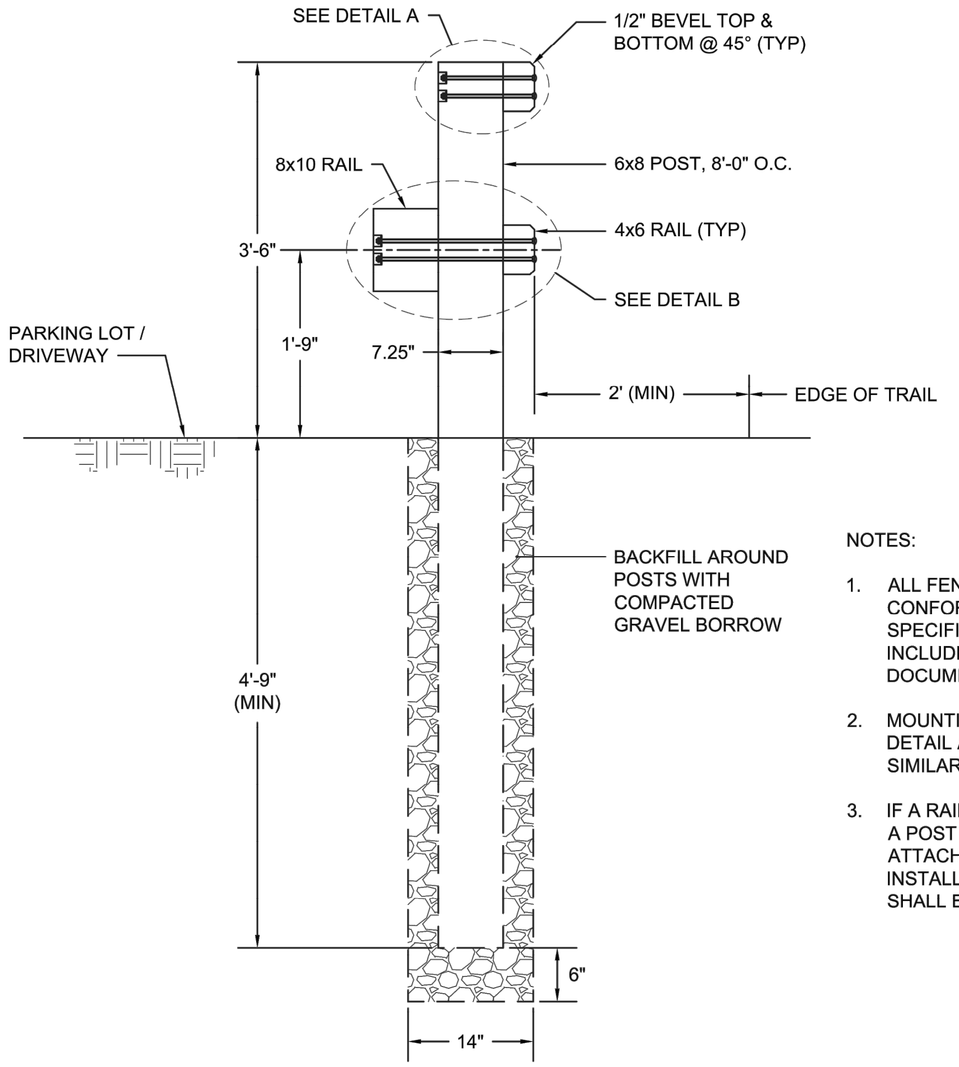

SECTION A-A
NOT TO SCALE

NOTES:

1. ALL FENCING MATERIAL SHALL CONFORM TO THE STANDARD SPECIFICATIONS & SPECIAL PROVISIONS INCLUDED IN THE CONTRACT DOCUMENTS.
2. MOUNTING FOR UPPER RAIL IS SHOWN IN DETAIL A. MOUNT LOWER RAIL IN SIMILAR FASHION.
3. IF A RAIL TIMBER IS CONTINUOUS OVER A POST ONLY 2 BOLTS ARE REQUIRED TO ATTACH RAIL TO POST. BOLTS INSTALLED ON CONTINUOUS RAILS SHALL BE CENTERED ON POST.

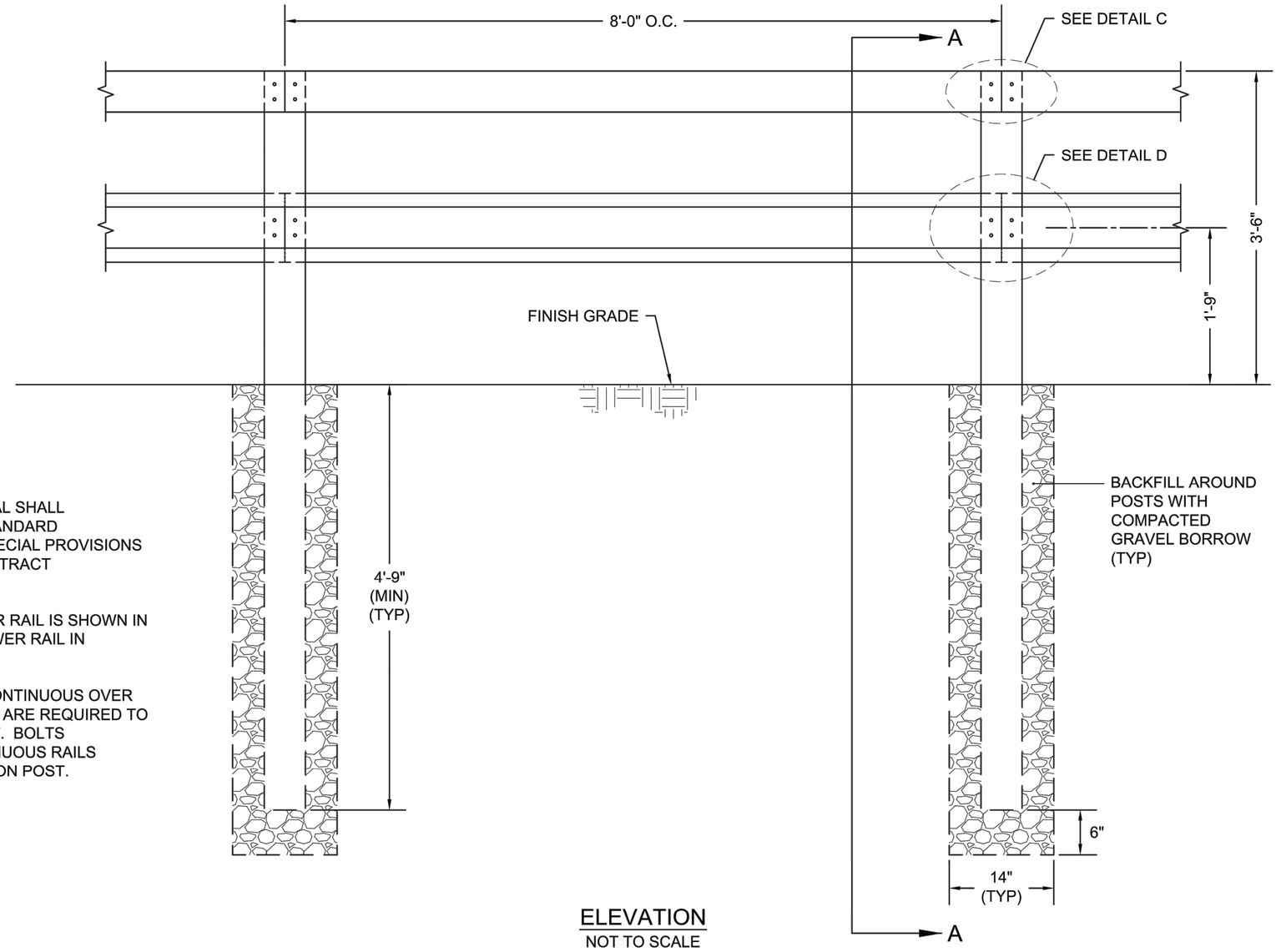

ELEVATION
NOT TO SCALE

WOOD RAIL FENCE WITH GUARDRAIL

N.T.S.

608930_HD10(CONSTRUCTION DETAILS).DWG Plotted on 28-Oct-2022 4:31 PM
Proposal No. 608930-128034
A00869 - 146

608930_HD10(CONSTRUCTION DETAILS).DWG Plotted on 28-Oct-2022 4:31 PM

LAWRENCE
LMRC RAIL TRAIL

STATE	FED. AID PROJ. NO.	SHEET NO.	TOTAL SHEETS
MA	-	128	225
PROJECT FILE NO. 608930			

CONSTRUCTION DETAILS - 5 OF 5

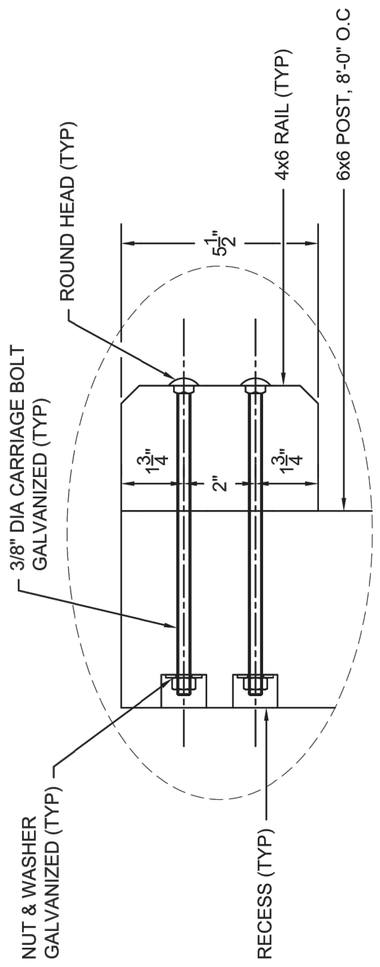

DETAIL A

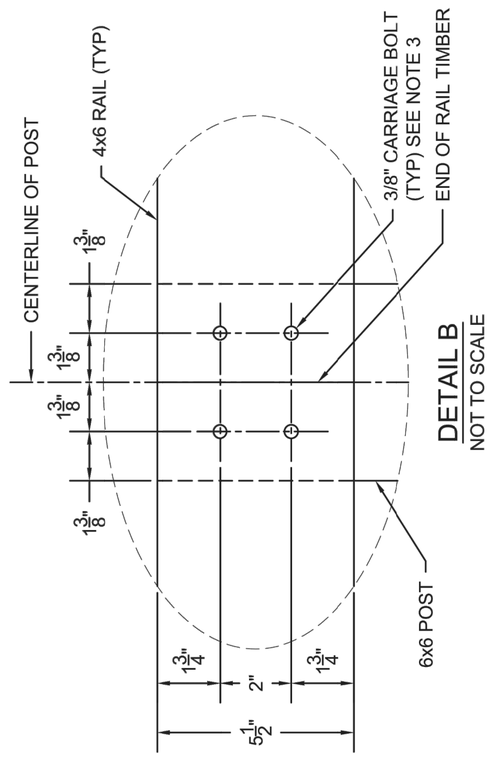

DETAIL B
NOT TO SCALE

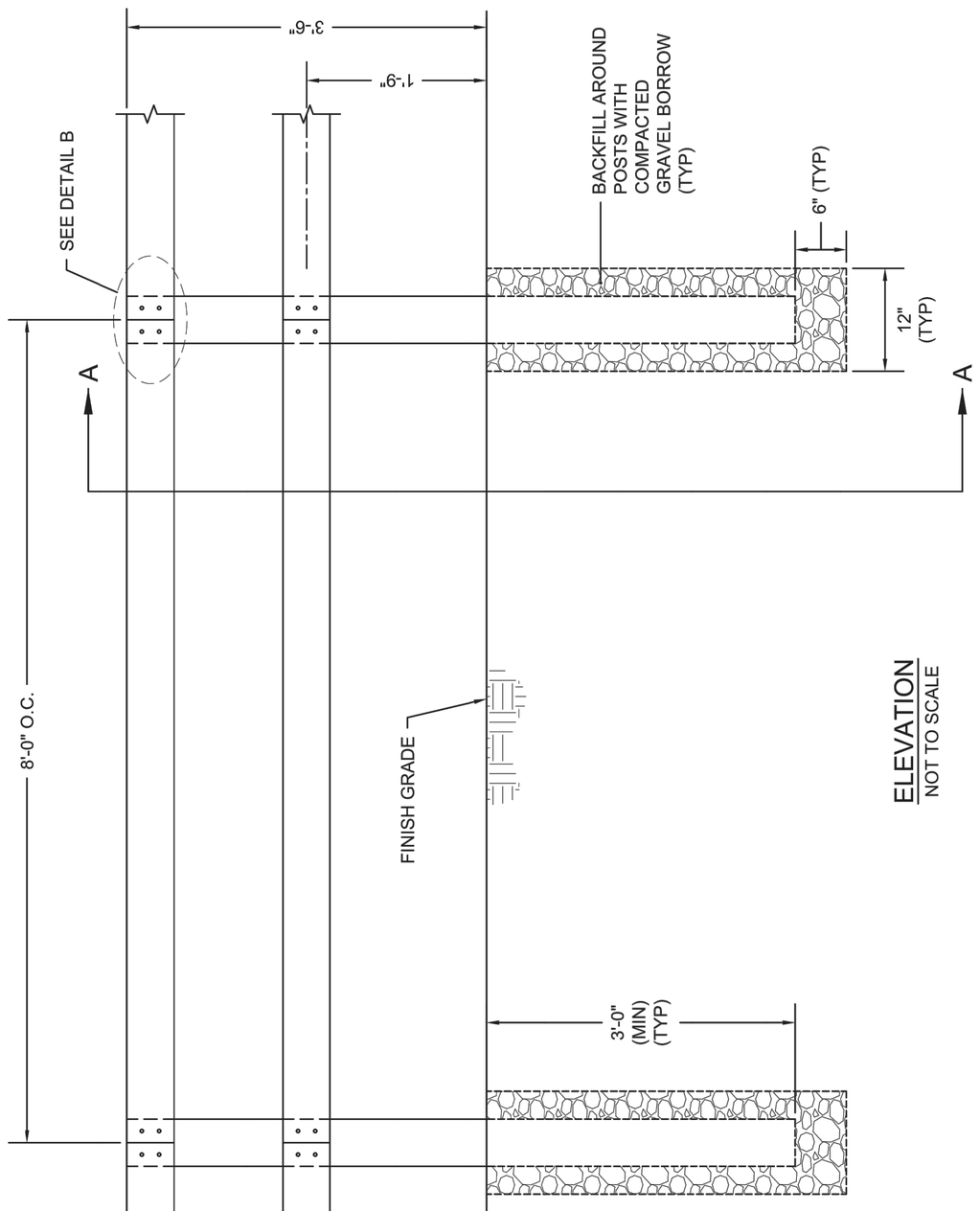

ELEVATION
NOT TO SCALE

WOOD RAIL FENCE
N.T.S.

NOTES:

1. ALL FENCING MATERIAL SHALL CONFORM TO THE STANDARD SPECIFICATIONS & SPECIAL PROVISIONS INCLUDED IN THE CONTRACT DOCUMENTS.
2. MOUNTING FOR UPPER RAIL IS SHOWN IN DETAIL A. MOUNT LOWER RAIL IN SIMILAR FASHION.
3. IF A RAIL TIMBER IS CONTINUOUS OVER A POST ONLY 2 BOLTS ARE REQUIRED TO ATTACH RAIL TO POST. BOLTS INSTALLED ON CONTINUOUS RAILS SHALL BE CENTERED ON POST.

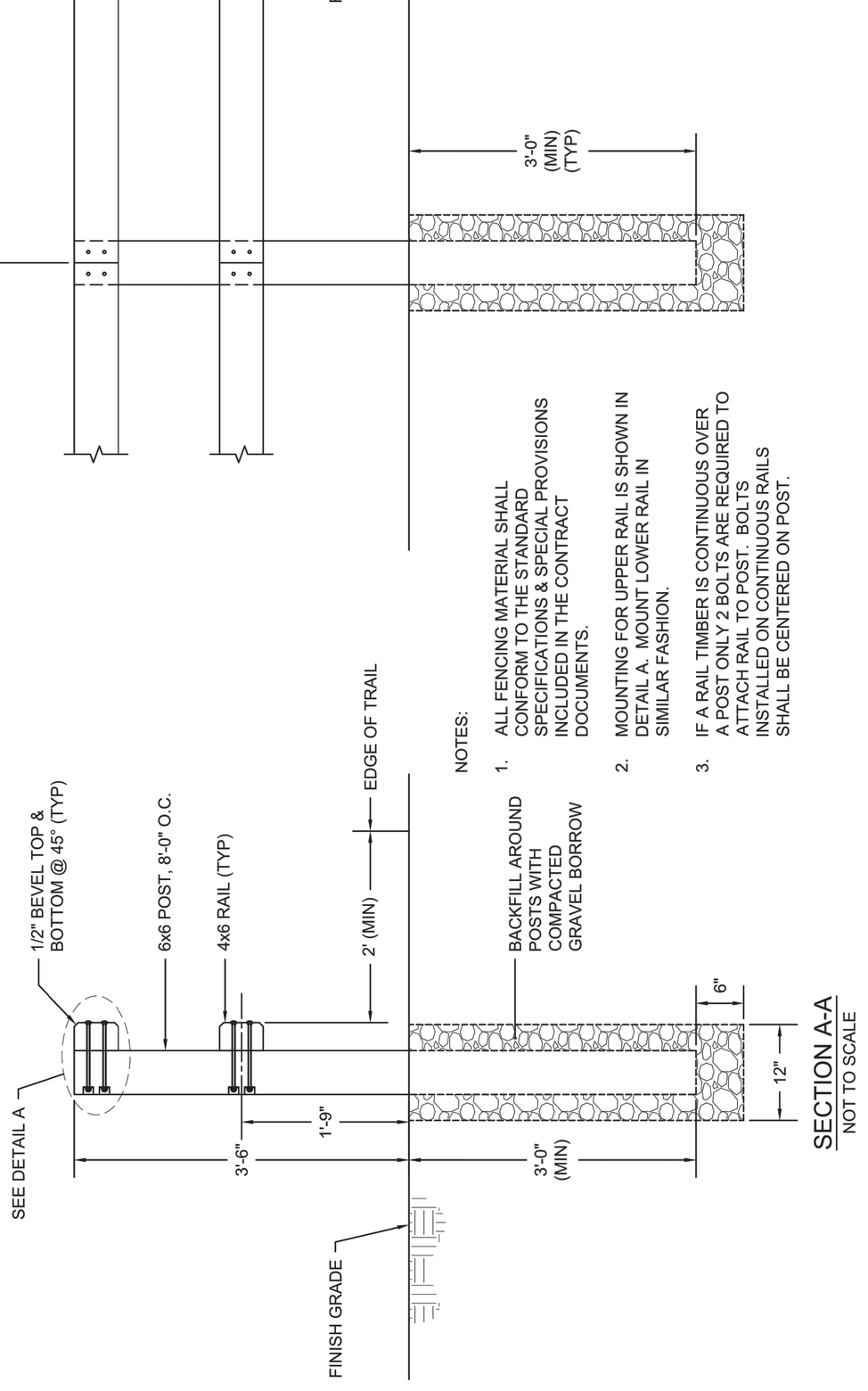

SECTION A-A
NOT TO SCALE

WORKING POINT TABLE		
STA 74+45± TO STA 75+20±		
WORKING POINT #	STATION	ELEVATION
1	74+45	76.57
2	74+50	76.59
3	75+00	75.91
4	75+20	75.45

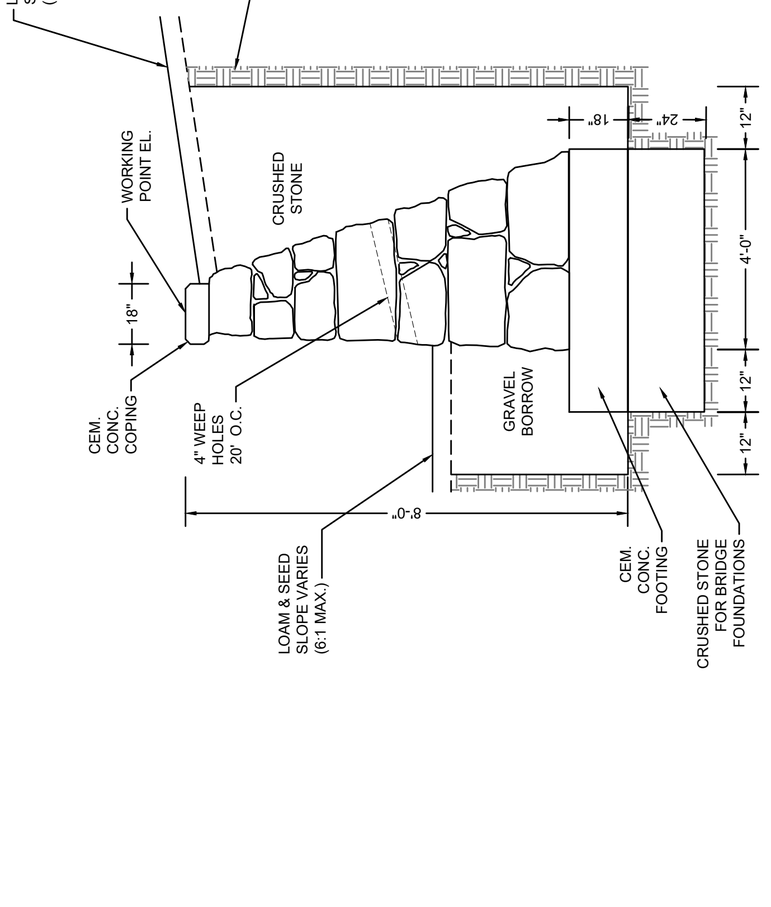

CEMENTED STONE MASONRY WALL
N.T.S.

FOR PERMITTING PURPOSES - NOT FOR CONSTRUCTION

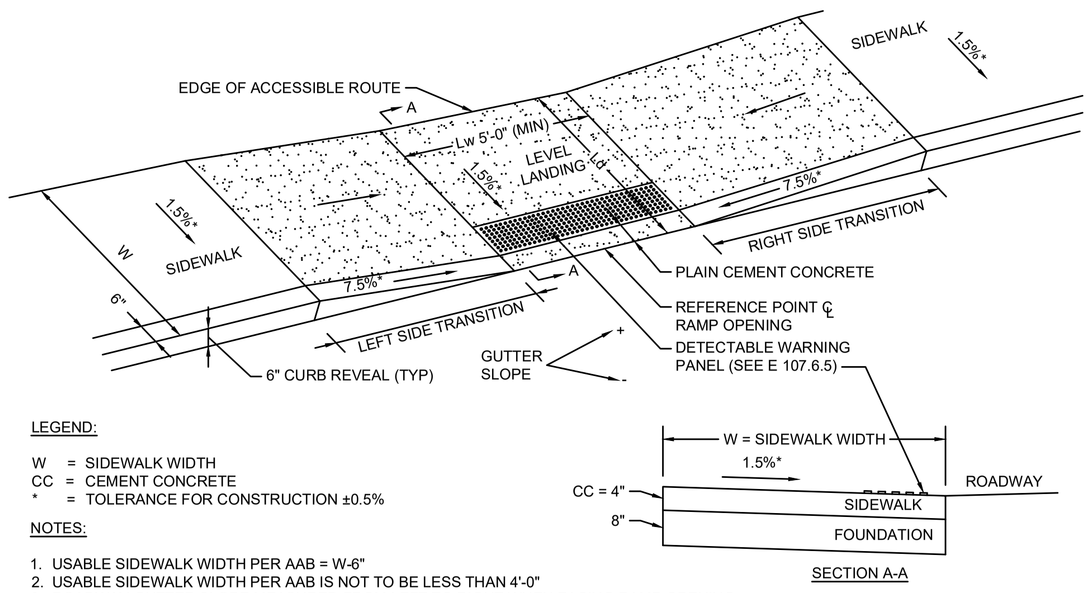

LEGEND:

W = SIDEWALK WIDTH
CC = CEMENT CONCRETE
* = TOLERANCE FOR CONSTRUCTION ±0.5%

NOTES:

1. USABLE SIDEWALK WIDTH PER AAB = W-6"
2. USABLE SIDEWALK WIDTH PER AAB IS NOT TO BE LESS THAN 4'-0"
3. ROADWAY GUTTER SLOPE MEASURED FROM LEFT TO RIGHT WHEN FACING RAMP OPENING
4. SEE E 107.6.5 FOR DETECTABLE WARNING PANEL DETAILS
5. SEE E 107.2.1 FOR ALL OTHER DETAILS

CURB RAMP TYPE A

N.T.S.

PEDESTRIAN CURB RAMP DATA												
RAMP #	BASELINE REFERENCE	STATION	OFFSET	LEVEL LANDING		ROADWAY GUTTER SLOPE	LEFT SIDE			RIGHT SIDE		
				WIDTH (Lw)	DEPTH (Ld)		TRANSITION LENGTH	CURB REVEAL	SIDEWALK WIDTH (W)	TRANSITION LENGTH	CURB REVEAL	SIDEWALK WIDTH (W)
1	LAWRENCE RAIL TRAIL A	1+20.1	0.5' RT	10'-0"	8'-6"	-0.51%	7'-8"	0'-6"	8'-6"	6'-6"	0'-6"	8'-6"

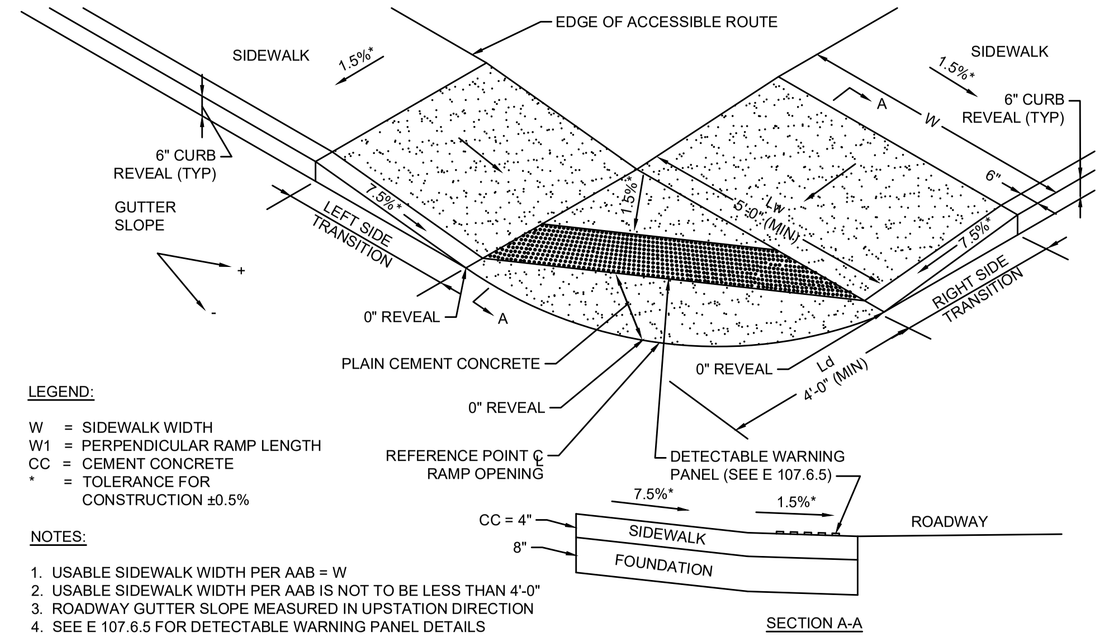

LEGEND:

W = SIDEWALK WIDTH
W1 = PERPENDICULAR RAMP LENGTH
CC = CEMENT CONCRETE
* = TOLERANCE FOR CONSTRUCTION ±0.5%

NOTES:

1. USABLE SIDEWALK WIDTH PER AAB = W
2. USABLE SIDEWALK WIDTH PER AAB IS NOT TO BE LESS THAN 4'-0"
3. ROADWAY GUTTER SLOPE MEASURED IN UPSTATION DIRECTION
4. SEE E 107.6.5 FOR DETECTABLE WARNING PANEL DETAILS

CURB RAMP TYPE B

N.T.S.

PEDESTRIAN CURB RAMP DATA												
RAMP #	BASELINE REFERENCE	STATION	OFFSET	LEVEL LANDING		ROADWAY GUTTER SLOPE	LEFT SIDE			RIGHT SIDE		
				WIDTH (Lw)	DEPTH (Ld)		TRANSITION LENGTH	CURB REVEAL	SIDEWALK WIDTH (W)	TRANSITION LENGTH	CURB REVEAL	SIDEWALK WIDTH (W)
2	LAWRENCE RAIL TRAIL B	24+94.4	32.4' LT	10'-0"	9'-5"	-0.85%	9'-0"	0'-6"	9'-10"	9'-5"	0'-6"	8'-6"

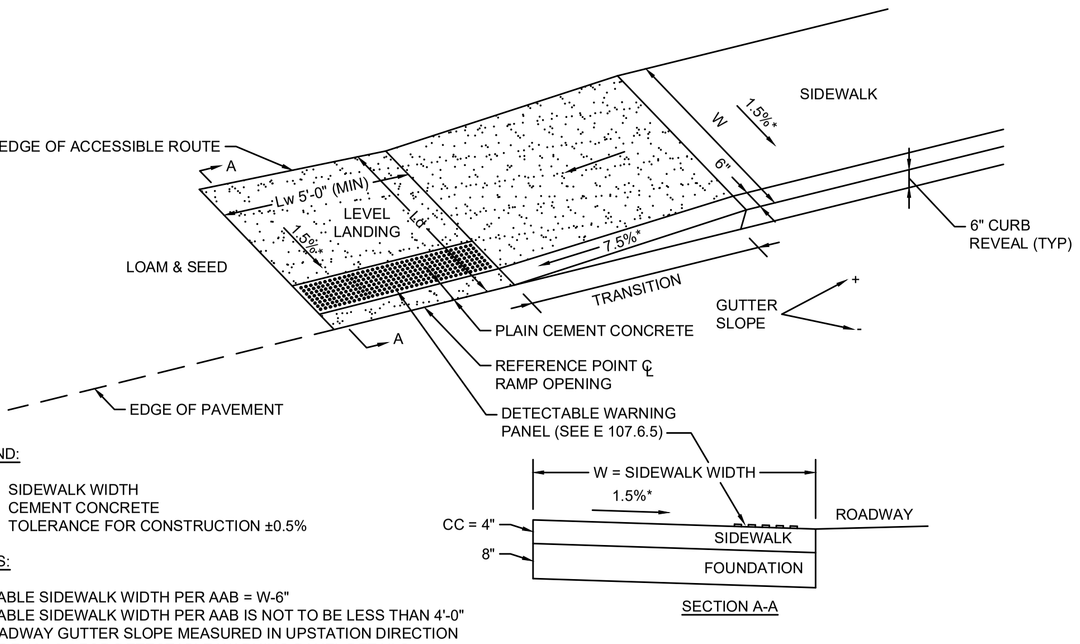

LEGEND:

W = SIDEWALK WIDTH
CC = CEMENT CONCRETE
* = TOLERANCE FOR CONSTRUCTION ±0.5%

NOTES:

1. USABLE SIDEWALK WIDTH PER AAB = W-6"
2. USABLE SIDEWALK WIDTH PER AAB IS NOT TO BE LESS THAN 4'-0"
3. ROADWAY GUTTER SLOPE MEASURED IN UPSTATION DIRECTION
4. SEE E 107.6.5 FOR DETECTABLE WARNING PANEL DETAILS
5. SEE E 107.2.1 FOR ALL OTHER DETAILS

CURB RAMP TYPE C

N.T.S.

PEDESTRIAN CURB RAMP DATA									
RAMP #	BASELINE REFERENCE	STATION	OFFSET	LEVEL LANDING		ROADWAY GUTTER SLOPE	RIGHT SIDE		
				WIDTH (Lw)	DEPTH (Ld)		TRANSITION LENGTH	CURB REVEAL	SIDEWALK WIDTH (W)
3	LAWRENCE RAIL TRAIL A	15+34.1	22.6' RT	10'-0"	9'-0"	-1.54%	9'-0"	0'-6"	9'-3"

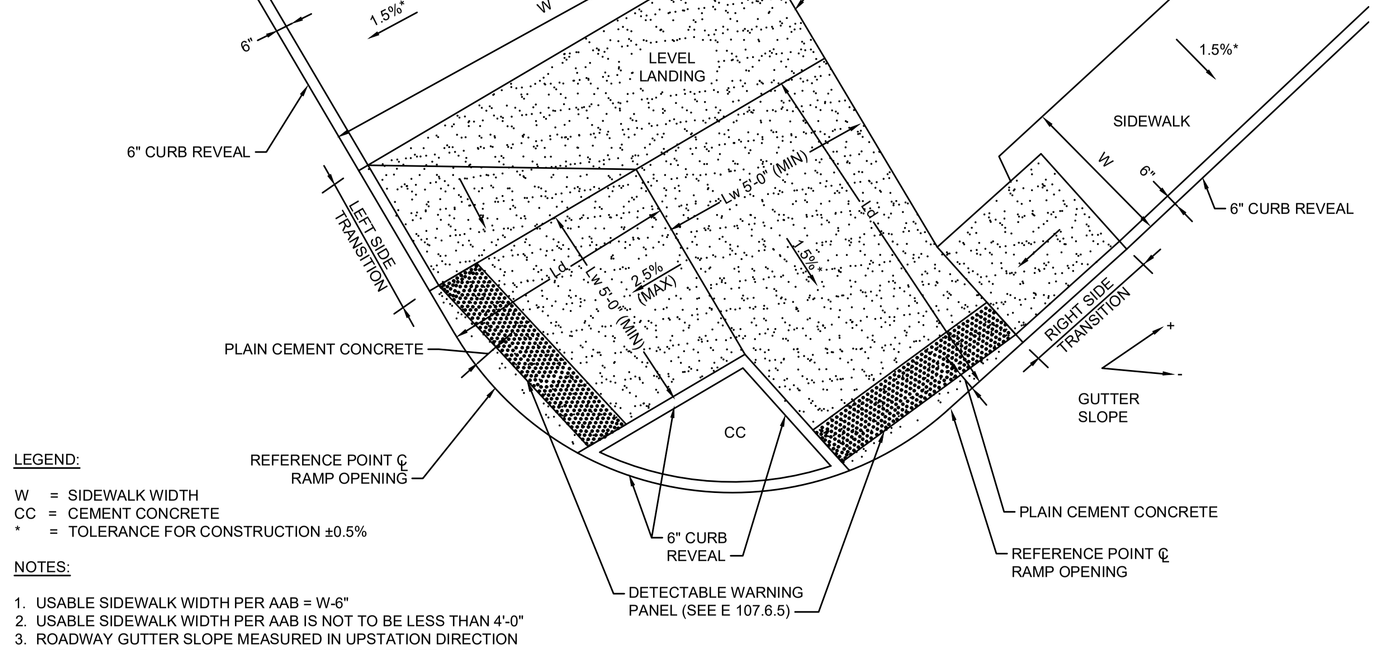

LEGEND:

W = SIDEWALK WIDTH
CC = CEMENT CONCRETE
* = TOLERANCE FOR CONSTRUCTION ±0.5%

NOTES:

1. USABLE SIDEWALK WIDTH PER AAB = W-6"
2. USABLE SIDEWALK WIDTH PER AAB IS NOT TO BE LESS THAN 4'-0"
3. ROADWAY GUTTER SLOPE MEASURED IN UPSTATION DIRECTION
4. SEE E 107.6.5 FOR DETECTABLE WARNING PANEL DETAILS
5. SEE E 107.2.1 FOR ALL OTHER DETAILS

CURB RAMP TYPE D

N.T.S.

PEDESTRIAN CURB RAMP DATA												
RAMP #	BASELINE REFERENCE	STATION	OFFSET	LEVEL LANDING		ROADWAY GUTTER SLOPE	LEFT SIDE			RIGHT SIDE		
				WIDTH (Lw)	DEPTH (Ld)		TRANSITION LENGTH	CURB REVEAL	SIDEWALK WIDTH (W)	TRANSITION LENGTH	CURB REVEAL	SIDEWALK WIDTH (W)
4	LAWRENCE RAIL TRAIL A	15+68.8	14.2' RT	10'-0"	17'-6"	-0.05%	-	-	-	6'-6"	0'-6"	6'-0"
5	LAWRENCE RAIL TRAIL A	15+80.7	2.8' LT	10'-0"	9'-3"	-0.75%	6'-6"	0'-6"	21'-4"	-	-	-

CURB RAMP NOTES:

1. A MINIMUM OF 3'-0" CLEAR (EXCLUDING CURB WIDTH) SHALL BE MAINTAINED AT ANY PERMANENT OBSTACLE IN ACCESSIBLE ROUTE (I.E., HYDRANTS, UTILITY POLES, TREE WELLS, SIGNS, ETC.).
2. CURB TREATMENT VARIES, SEE PLANS FOR CURB TYPE.
3. RAMP, CURB AND ADJACENT PAVEMENTS SHALL BE GRADED TO PREVENT PONDING.
4. ELIMINATE CURBING AT RAMP WHERE IT ABUTS ROADWAY.
5. DETECTABLE WARNING PANELS ARE REQUIRED ON ALL OF THE PROPOSED WHEELCHAIR RAMPS AND ARE TO BE INSTALLED IN ACCORDANCE WITH CONSTRUCTION STANDARD E 107.6.5 (OCTOBER 2017). CONTRACTOR SHALL PROVIDE 6" BETWEEN DETECTABLE WARNING PANEL AND EDGE OF CONCRETE WHERE IT ABUTS LOAM & SEED.`
6. WHEELCHAIR RAMP SLOPES AND CROSS SLOPES SHALL HAVE A CONSTRUCTION TOLERANCE OF ±0.5%.
7. DETECTABLE WARNING PANELS SHALL BE BRICK RED IN COLOR.
8. IT IS THE RESPONSIBILITY OF THE CONTRACTOR TO VERIFY EXISTING GUTTER SLOPES AND ENSURE CURB AND SIDEWALK TRANSITIONS ARE CONSTRUCTED TO MEET ADA REQUIREMENTS.

CURB RAMP NOTES

N.T.S.

LAWRENCE
LMRC RAIL TRAIL

STATE	FED. AID PROJ. NO.	SHEET NO.	TOTAL SHEETS
MA	-	129	225
PROJECT FILE NO.		608930	

CURB RAMP & DRIVEWAY DETAILS - 1 OF 2

608930_HD10(CONSTRUCTION DETAILS).DWG Plotted on 28-Oct-2022 4:32 PM

Proposal No. 608930-128034

A00869 - 148

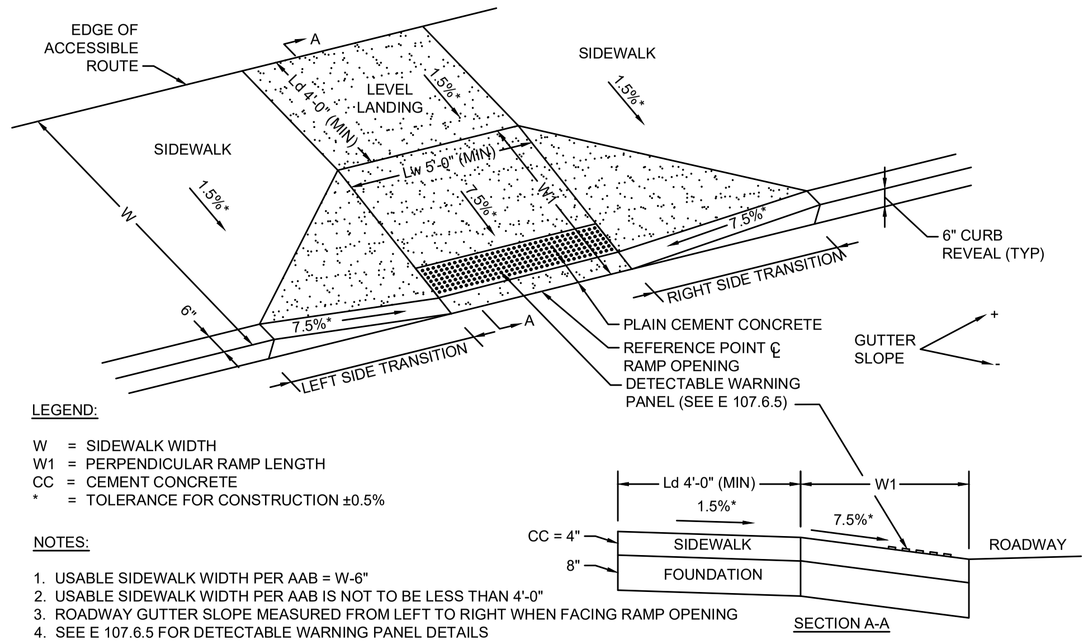

LEGEND:

W = SIDEWALK WIDTH
W1 = PERPENDICULAR RAMP LENGTH
CC = CEMENT CONCRETE
* = TOLERANCE FOR CONSTRUCTION ±0.5%

NOTES:

1. USABLE SIDEWALK WIDTH PER AAB = W-6"
2. USABLE SIDEWALK WIDTH PER AAB IS NOT TO BE LESS THAN 4'-0"
3. ROADWAY GUTTER SLOPE MEASURED FROM LEFT TO RIGHT WHEN FACING RAMP OPENING
4. SEE E 107.6.5 FOR DETECTABLE WARNING PANEL DETAILS

CURB RAMP TYPE E

N.T.S.

PEDESTRIAN CURB RAMP DATA												
RAMP #	BASELINE REFERENCE	STATION	OFFSET	LEVEL LANDING		ROADWAY GUTTER SLOPE	LEFT SIDE			RIGHT SIDE		
				WIDTH (Lw)	DEPTH (Ld)		TRANSITION LENGTH	CURB REVEAL	SIDEWALK WIDTH (W)	TRANSITION LENGTH	CURB REVEAL	SIDEWALK WIDTH (W)
6	LAWRENCE RAIL TRAIL B	25+22.0	0.0' LT/RT	12'-0"	5'-0"	-2.11%	8'-0"	0'-6"	6'-6"	6'-6"	0'-6"	8'-6"

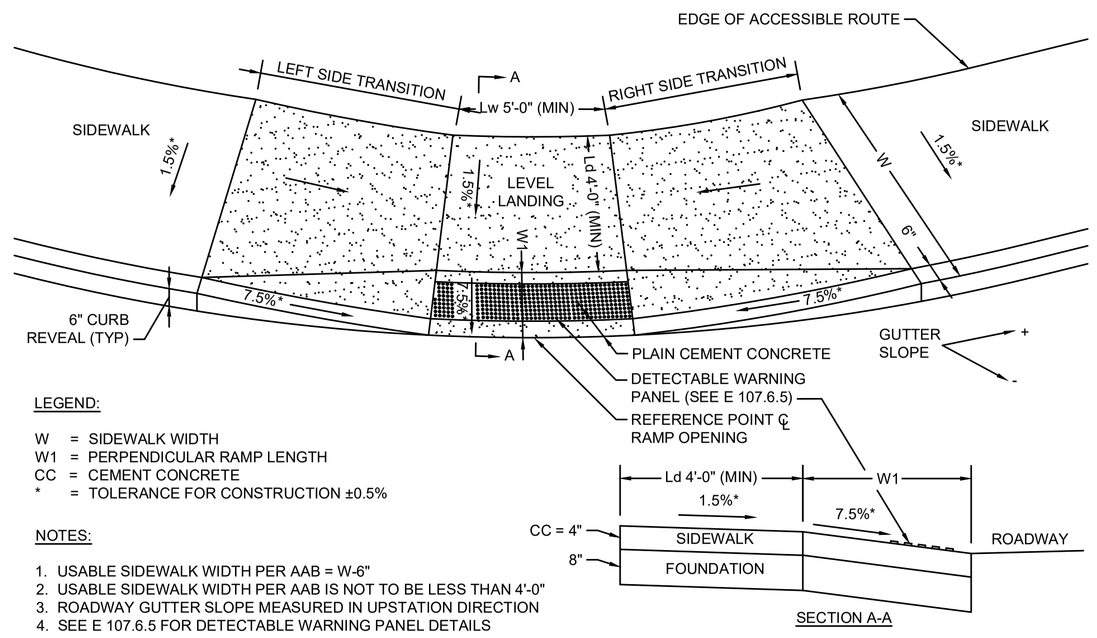

LEGEND:

W = SIDEWALK WIDTH
W1 = PERPENDICULAR RAMP LENGTH
CC = CEMENT CONCRETE
* = TOLERANCE FOR CONSTRUCTION ±0.5%

NOTES:

1. USABLE SIDEWALK WIDTH PER AAB = W-6"
2. USABLE SIDEWALK WIDTH PER AAB IS NOT TO BE LESS THAN 4'-0"
3. ROADWAY GUTTER SLOPE MEASURED IN UPSTATION DIRECTION
4. SEE E 107.6.5 FOR DETECTABLE WARNING PANEL DETAILS

CURB RAMP TYPE F

N.T.S.

PEDESTRIAN CURB RAMP DATA												
RAMP #	BASELINE REFERENCE	STATION	OFFSET	LEVEL LANDING		ROADWAY GUTTER SLOPE	LEFT SIDE			RIGHT SIDE		
				WIDTH (Lw)	DEPTH (Ld)		TRANSITION LENGTH	CURB REVEAL	SIDEWALK WIDTH (W)	TRANSITION LENGTH	CURB REVEAL	SIDEWALK WIDTH (W)
7	ESSEX STREET	91+36.5	16.0' RT	12'-0"	5'-0"	0.52%	6'-6"	0'-6"	12'-0"	7'-8"	0'-6"	12'-0"
8	ESSEX STREET	91+36.5	20.9' LT	12'-0"	10'-0"	1.33%	7'-8"	0'-6"	11'-6"	6'-5"	0'-6"	9'-9"
9	HAVERHILL STREET	101+09.0	13.0' RT	12'-0"	10'-0"	-1.15%	6'-6"	0'-6"	11'-0"	7'-8"	0'-6"	11'-0"
10	HAVERHILL STREET	101+09.4	13.0' LT	12'-0"	5'-0"	-1.37%	7'-9"	0'-6"	12'-6"	6'-6"	0'-6"	12'-6"

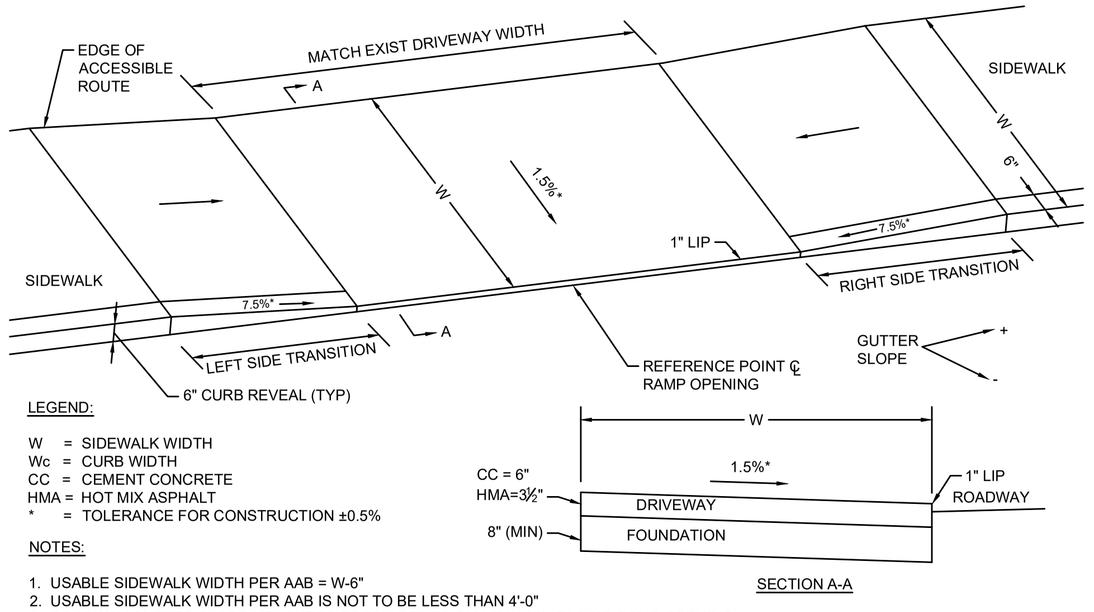

LEGEND:

W = SIDEWALK WIDTH
Wc = CURB WIDTH
CC = CEMENT CONCRETE
HMA = HOT MIX ASPHALT
* = TOLERANCE FOR CONSTRUCTION ±0.5%

NOTES:

1. USABLE SIDEWALK WIDTH PER AAB = W-6"
2. USABLE SIDEWALK WIDTH PER AAB IS NOT TO BE LESS THAN 4'-0"
3. ROADWAY GUTTER SLOPE MEASURED FROM LEFT TO RIGHT WHEN FACING RAMP OPENING
4. SURFACE TREATMENT VARIES; SEE PLANS

SIDEWALK THROUGH DRIVEWAY TYPE A

N.T.S.

DRIVEWAY DATA												
DWY #	BASELINE REFERENCE	STATION	OFFSET	DRIVEWAY SURFACE	DWY WIDTH @ GUTTER	ROADWAY GUTTER SLOPE	WIDTH OF ACCESSIBLE ROUTE	LEFT SIDE TRANSITION			RIGHT SIDE TRANSITION		
								LENGTH	CURB REVEAL	SW WIDTH (W)	LENGTH	CURB REVEAL	SW WIDTH (W)
1	LAWRENCE RAIL TRAIL A	13+57.7	6.5' RT	CEM CONC	54'-10"	-1.30%	10'-0"	7'-8"	0'-6"	10'-0"	6'-6"	0'-6"	12'-1"
2	LAWRENCE RAIL TRAIL B	32+73.3	35.2' RT	CEM CONC	12'-0"	-1.48%	12'-0"	6'-6"	0'-6"	12'-0"	11'-0"	0'-6"	12'-0"
3	LAWRENCE RAIL TRAIL B	32+68.5	41.1' LT	CEM CONC	30'-0"	-1.06%	7'-3"	7'-8"	0'-6"	10'-5"	6'-6"	0'-6"	7'-5"
4	LAWRENCE RAIL TRAIL B	33+13.4	47.3' RT	CEM CONC	30'-1"	2.21%	6'-5"	11'-0"	0'-6"	9'-2"	6'-6"	0'-6"	6'-0"
5	LAWRENCE RAIL TRAIL B	49+61.9	58.3 RT	CEM CONC	30'-0"	-0.51%	7'-6"	7'-8"	0'-6"	7'-6"	6'-6"	0'-6"	7'-6"

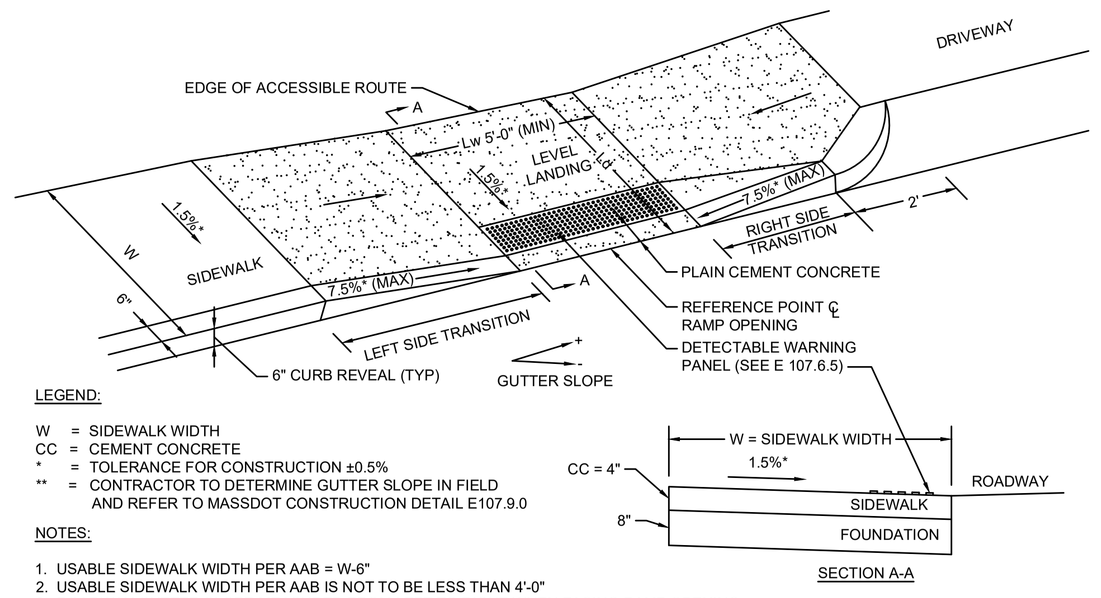

LEGEND:

W = SIDEWALK WIDTH
CC = CEMENT CONCRETE
* = TOLERANCE FOR CONSTRUCTION ±0.5%
** = CONTRACTOR TO DETERMINE GUTTER SLOPE IN FIELD AND REFER TO MASSDOT CONSTRUCTION DETAIL E107.9.0

NOTES:

1. USABLE SIDEWALK WIDTH PER AAB = W-6"
2. USABLE SIDEWALK WIDTH PER AAB IS NOT TO BE LESS THAN 4'-0"
3. ROADWAY GUTTER SLOPE MEASURED FROM LEFT TO RIGHT WHEN FACING RAMP OPENING
4. SEE E 107.6.5 FOR DETECTABLE WARNING PANEL DETAILS
5. SEE E 107.2.1 FOR ALL OTHER DETAILS

PEDESTRIAN CURB RAMP TYPE J

N.T.S.

PEDESTRIAN CURB RAMP DATA												
RAMP #	BASELINE REFERENCE	STATION	OFFSET	LEVEL LANDING		ROADWAY GUTTER SLOPE	LEFT SIDE			RIGHT SIDE		
				WIDTH (Lw)	DEPTH (Ld)		TRANSITION LENGTH	CURB REVEAL	SIDEWALK WIDTH (W)	TRANSITION LENGTH	CURB REVEAL	SIDEWALK WIDTH (W)
11	LAWRENCE RAIL TRAIL B	56+68.0	184.0' LT	5'-0"	4'-0"	**	6'-6"	6"	6'-11"	9'-7"	6"	4'-11"

A00869 - 149

608930_HD10(CONSTRUCTION DETAILS).DWG Plotted on 28-Oct-2022 4:32 PM

Proposal No. 608930-128034

FOR PERMITTING PURPOSES - NOT FOR CONSTRUCTION

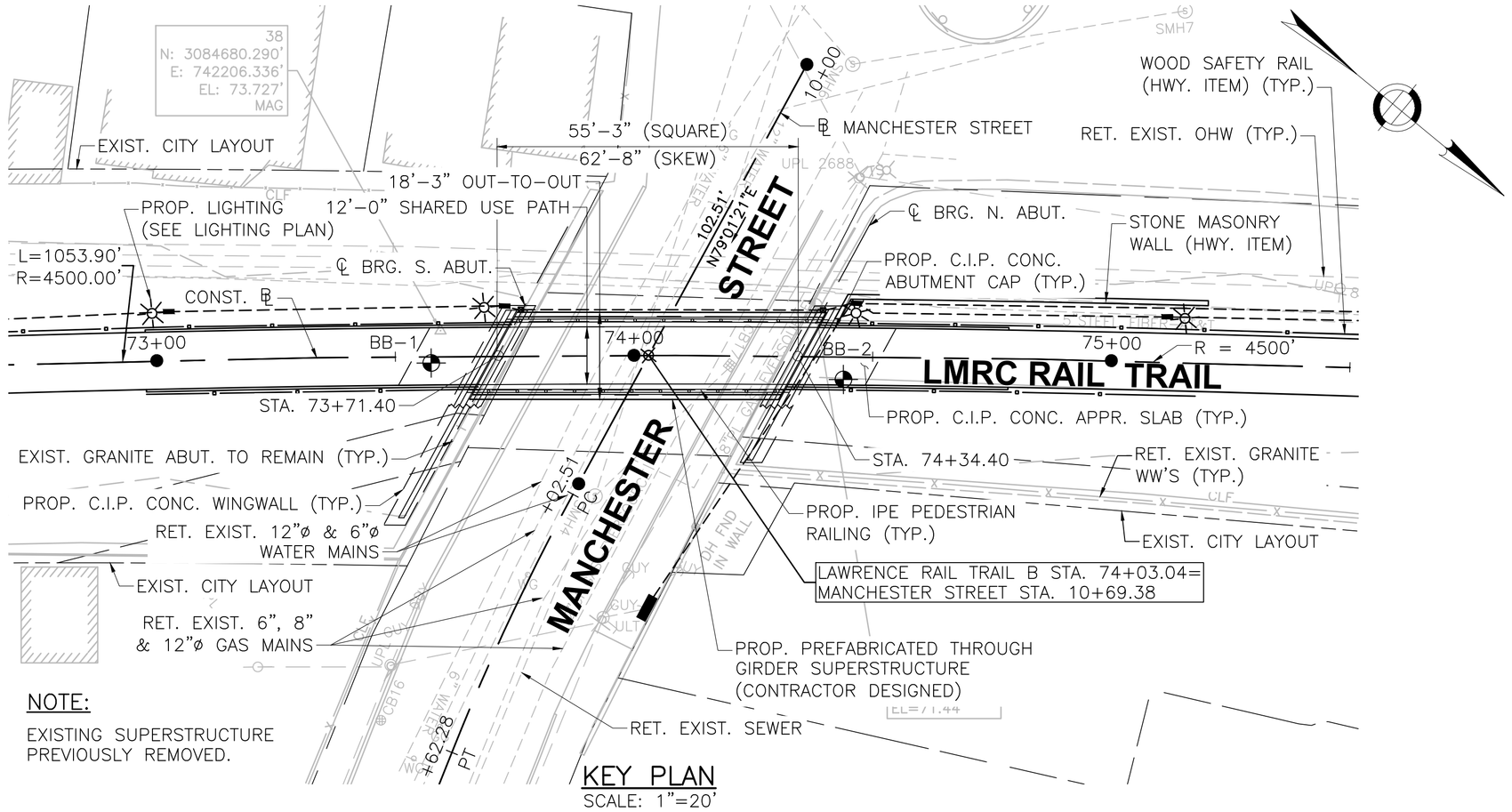

KEY PLAN
SCALE: 1"=20'

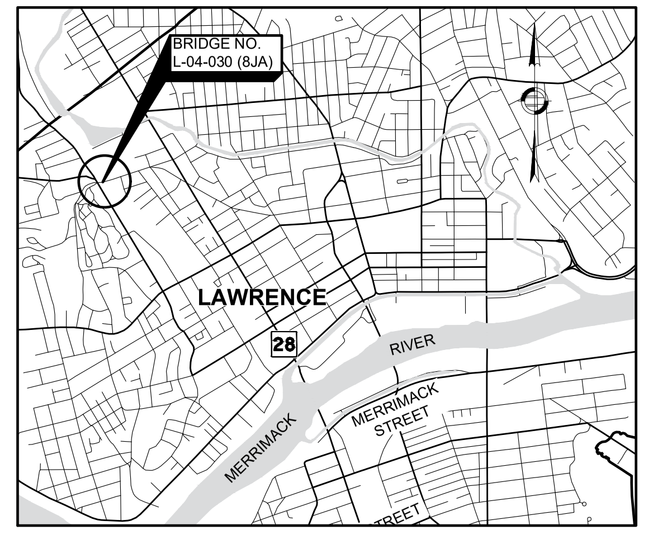

LOCUS MAP
SCALE: 1"=2000'

LAWRENCE
LMRC RAIL TRAIL OVER MANCHESTER STREET

STATE	FED. AID PROJ. NO.	SHEET NO.	TOTAL SHEETS
MA	-	131	225
PROJECT FILE NO.	608930		

KEY PLAN, PROFILES, LOCUS AND INDEX

INDEX OF SHEETS

SHEET NO.	DESCRIPTION
1	KEY PLAN, PROFILES, LOCUS AND INDEX
2	GENERAL NOTES
3	BORING LOGS
4	DEMOLITION DETAILS
5	PLAN AND ELEVATION
6	ABUTMENT PLAN AND ELEVATION
7	MISCELLANEOUS DETAILS

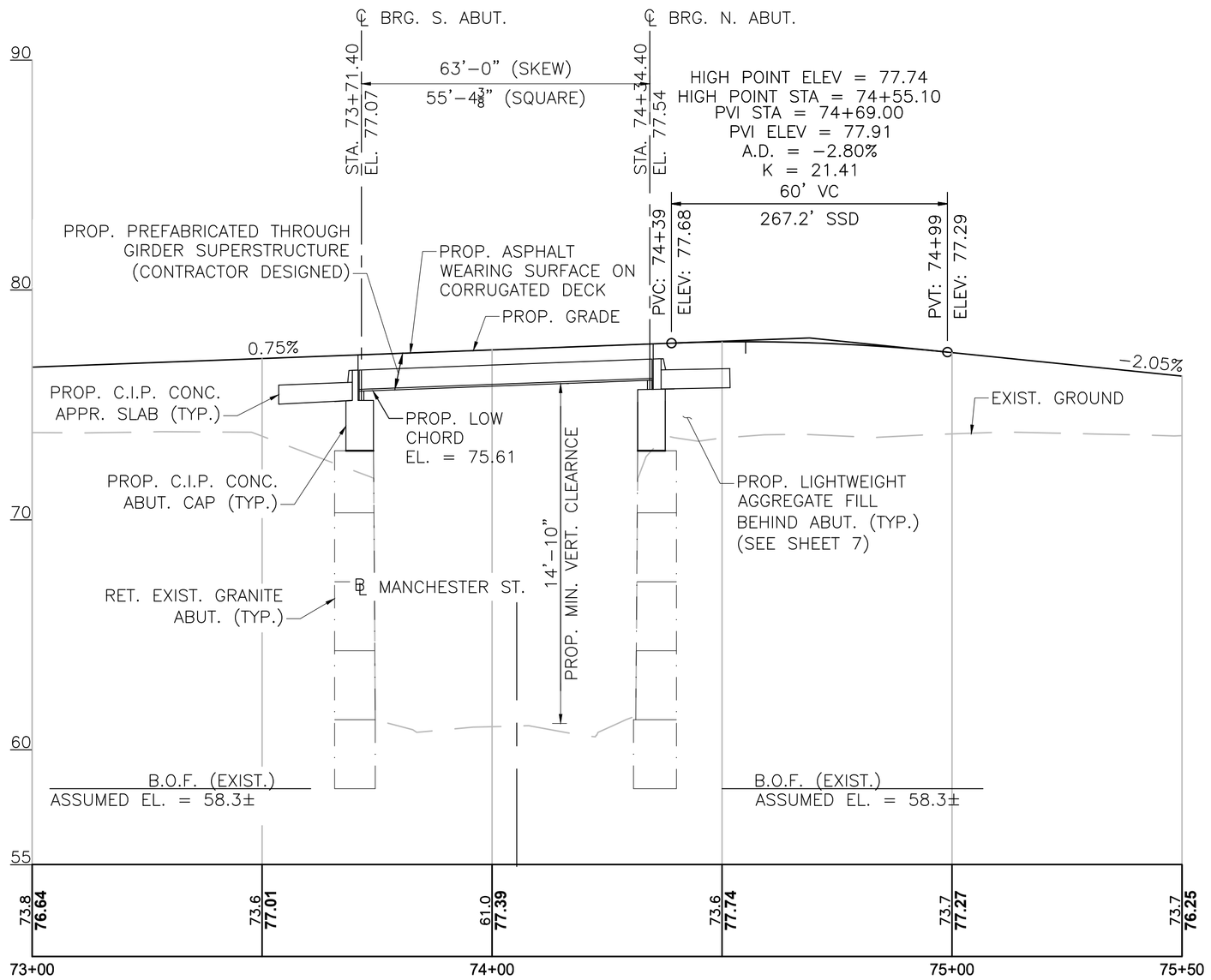

NOTE:
EXISTING SUPERSTRUCTURE PREVIOUSLY REMOVED.

LMRC RAIL TRAIL PROFILE
HORIZONTAL SCALE: 1" = 20'-0"
VERTICAL SCALE" 1" = 4'-0"

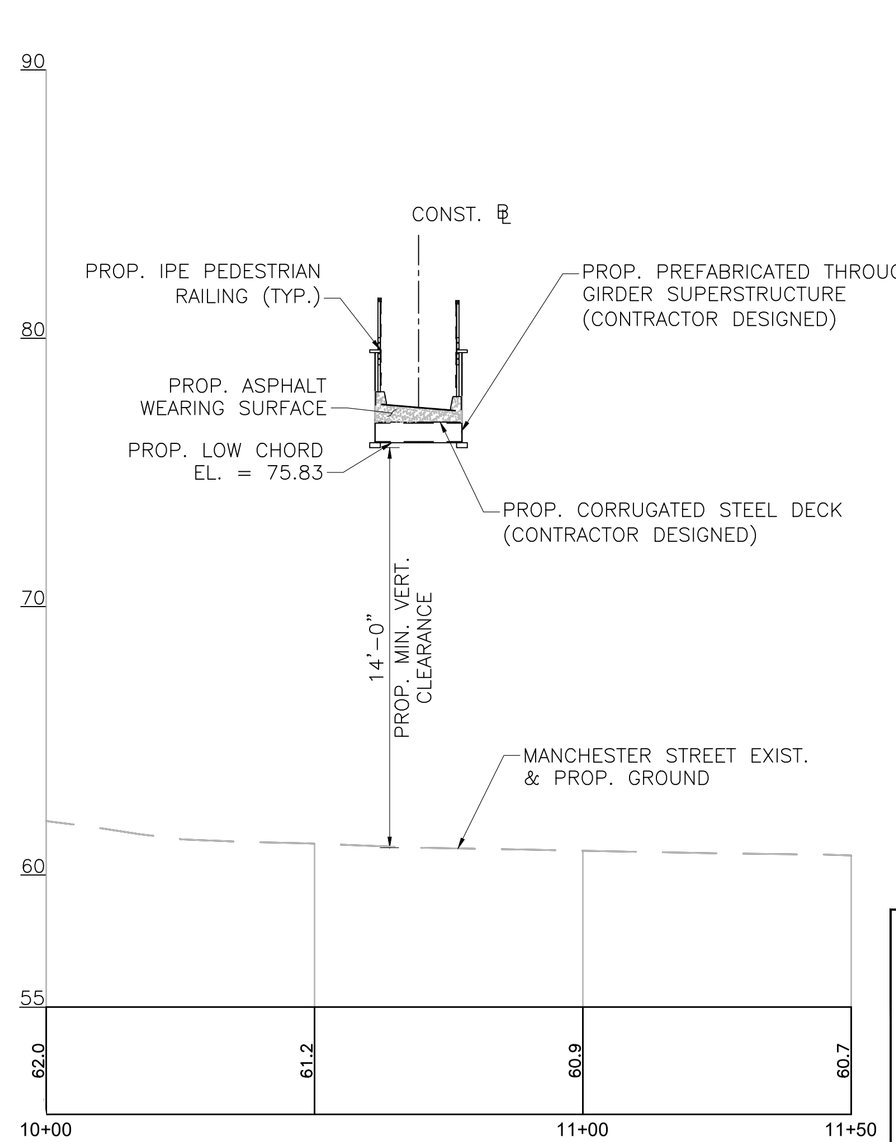

NOTE:
EXISTING SUPERSTRUCTURE PREVIOUSLY REMOVED.

MANCHESTER STREET PROFILE
HORIZONTAL SCALE: 1" = 20'-0"
VERTICAL SCALE" 1" = 4'-0"

TEC
The Engineering Corp
282 Merrimack Street, Second Floor
Lawrence, MA 01843
978-794-1792

10/28/2022	FIRST STRUCTURAL SUBMITTAL

massDOT
Massachusetts Department of Transportation
Highway Division

SUPERSTRUCTURE REPLACEMENT

LAWRENCE

LMRC RAIL TRAIL
OVER MANCHESTER STREET

MASSACHUSETTS DEPARTMENT OF TRANSPORTATION
HIGHWAY DIVISION
10 PARK PLAZA BOSTON, MASS

STATE BRIDGE ENGINEER

CHIEF ENGINEER

SHEET 1 OF 7 SHEETS BRIDGE NO. L-04-030 (8JA)

FOR PERMITTING PURPOSES - NOT FOR CONSTRUCTION

608930_BR1(L04030).DWG Plotted on 28-Oct-2022 1:12 PM
Proposal No. 608930-128034
October 28, 2022
First Structural Submittal (S1)
A00869 - 150

STATE	FED. AID PROJ. NO.	SHEET NO.	TOTAL SHEETS
MA	-	132	225
PROJECT FILE NO.	608930		

GENERAL NOTES

DESIGN:

IN ACCORDANCE WITH THE 2020 AMERICAN ASSOCIATION OF STATE HIGHWAY AND TRANSPORTATION OFFICIALS (AASHTO) LRFD BRIDGE DESIGN SPECIFICATIONS, 9TH EDITION WITH CURRENT INTERIM SPECIFICATIONS THROUGH 2021, AND THE 2009 AASHTO LRFD GUIDE SPECIFICATIONS FOR THE DESIGN OF PEDESTRIAN BRIDGES WITH INTERIM SPECIFICATIONS THROUGH 2015 FOR PEDESTRIAN LOADING OF 90 PSF AND H10 LOADING.

BENCHMARKS:

RIVET IN WALL
EL: 71.44'
N: 3084737.4728
E: 742152.4000

ELEVATIONS ARE BASED ON THE NORTH AMERICAN VERTICAL DATUM (NAVD) OF 1988.

SURVEY

THE CONTRACTOR SHALL CONDUCT HIS/HER OWN SURVEY TO REESTABLISH THE CENTERLINE OF CONSTRUCTION PRIOR TO ANY CONSTRUCTION ACTIVITIES. THE CONTRACTOR SHALL VERIFY ALL DIMENSIONS REQUIRED FOR THE PROPER PERFORMANCE OF HIS/HER WORK. FIELD CONDITIONS MAY EXIST THAT DEVIATE FROM THE TYPICAL AND THEORETICAL DIMENSIONS SHOWN ON THE PLANS. THE CONTRACTOR SHALL BE SOLELY RESPONSIBLE FOR THE FABRICATION AND FIT OF HIS/HER WORK.

SCALES:

SCALES NOTED ON THE PLANS ARE NOT APPLICABLE TO REDUCED SIZE PRINTS. DIVIDE SCALES BY 2 FOR HALF-SIZE PRINTS (A3).

FOUNDATIONS:

1. FOUNDATIONS MAY BE ALTERED, IF NECESSARY, TO SUIT CONDITIONS ENCOUNTERED DURING CONSTRUCTION, WITH APPROVAL OF THE ENGINEER.
2. REFER TO TO GEOTECHNICAL ENGINEERING REPORT DATED NOVEMBER 19, 2021 BY TRC INC.
3. SEE ADDITIONAL FOUNDATION NOTES, REFER TO SHEET 6.

UNSUITABLE MATERIAL:

ALL UNSUITABLE MATERIAL SHALL BE REMOVED WITHIN THE LIMITS OF THE FOUNDATIONS OF THE STRUCTURE, AS DIRECTED BY THE ENGINEER.

ANCHOR BOLTS:

ALL ANCHOR BOLTS SHALL BE SET BY TEMPLATE BEFORE THE CONCRETE IS PLACED.

CONCRETE:

1. ALL EXPOSED EDGE CORNERS SHALL BE FINISHED WITH A $\frac{3}{4}$" CHAMFER UNLESS OTHERWISE NOTED OR DIRECTED.
2. THE CONTRACTOR SHALL BE RESPONSIBLE FOR PREVENTING CONCRETE STAINS AND DISCOLORATION DURING CONSTRUCTION UNTIL SUCH TIME AS THE SURFACES ARE APPROVED AND ACCEPTED. ANY CONCRETE STAINS AND DISCOLORATION OCCURRING PRIOR TO ACCEPTANCE OF SURFACES SHALL BE REMOVED BY THE CONTRACTOR AT ITS OWN EXPENSE USING AN APPROVED PROCEDURE.
3. CONCRETE SHALL BE AS FOLLOWS, UNLESS OTHERWISE NOTED:

   4000 PSI, 1.5 INCH, 565 CEMENT CONCRETE.....FOOTINGS, ABUTMENT STEMS AND APPROACH SLABS
   4000 PSI, 3/4 INCH, 610 CEMENT CONCRETE.....WINGWALL STEMS AND ABUTMENT BACKWALLS

STRUCTURAL STEEL:

ALL STRUCTURAL STEEL SHALL CONFORM TO THE REQUIREMENTS OF AASHTO M 270, GRADE 50. ALL STRUCTURAL STEEL BE GALVANIZED AND PAINTED.

REINFORCEMENT:

REINFORCING STEEL SHALL BE EPOXY COATED AND CONFORM TO THE REQUIREMENTS OF AASHTO M 31 GRADE 60. UNLESS OTHERWISE NOTED ON THE CONSTRUCTION DRAWINGS, ALL BARS SHALL BE LAPPED AS FOLLOWS:

MODIFICATION CONDITION:	#4 BARS	#5 BARS
1. NONE	16"	19"
2. 12" OF CONCRETE BELOW BAR	20"	25"
3. EPOXY COATED BARS, COVER < 3db, OR CLEAR SPACING < 6db	23"	29"
4. COATED BARS, ALL OTHER CASES	18"	23"
5. CONDITION 2. AND 3.	26"	32"
6. CONDITION 2. AND 4.	24"	30"

ALL OTHER BARS SHALL BE LAPPED AS SHOWN ON THE CONSTRUCTION DRAWINGS.

UTILITIES:

ALL EXISTING UTILITIES SHALL BE LOCATED AND PROTECTED BY THE CONTRACTOR. THE CONTRACTOR IS RESPONSIBLE FOR COORDINATING WITH UTILITY OWNERS.

ESTIMATED QUANTITIES
(NOT GUARANTEED)

ITEM DESCRIPTION	QUANTITY	UNITS
BRIDGE EXCAVATION	20	CY
CRUSHED STONE FOR BRIDGE FOUNDATIONS	3	TON
4 INCH SLOT-PERFORATED CORRUGATED PLASTIC PIPE (SUBDRAIN)	40	FT
LIGHTWEIGHT AGGREGATE FILL	150	CY
BRIDGE STRUCTURE BRIDGE NO. L-04-030 (8JA)	1	LS

TRAFFIC DATA	ROADWAY OVER	ROADWAY UNDER
DESIGN YEAR	N/A	N/A
AVERAGE DAILY TRAFFIC - PRESENT	N/A	6128
AVERAGE DAILY TRAFFIC - DESIGN YEAR	N/A	N/A
DESIGN HOURLY VOLUME	N/A	558
DIRECTIONAL DISTRIBUTION	N/A	53%
TRUCK PERCENTAGE - AVERAGE DAY	N/A	N/A
TRUCK PERCENTAGE - PEAK HOUR	N/A	N/A
DESIGN SPEED	N/A	25 MPH
DIRECTIONAL DESIGN HOURLY VOLUME	N/A	N/A

SEISMIC DESIGN CRITERIA	
DESIGN RETURN PERIOD:	1000
DESIGN SPECTRA	
As	0.142
SDs	0.279
SD1	0.102
SITE CLASS	D
SEISMIC DESIGN CATEGORY (SDC)	A

DATE	DESCRIPTION
10/28/2022	FIRST STRUCTURAL SUBMITTAL

THIS SHEET IS APPROVED FOR CONSTRUCTION BY MASSDOT
AUTHORIZED SIGNATORY: _____ STATE BRIDGE ENGINEER
USE ONLY PRINTS OF LATEST DATE

FOR PERMITTING PURPOSES - NOT FOR CONSTRUCTION

608930_BR2-3L(04030).DWG Plotted on 28-Oct-2022 1:13 PM
October 28, 2022
First Structural Submittal (S1)
Proposal No. 608930-128034
A00869 - 151

BORING BB–1

MassDOT	TRC Environmental Corporation 650 Suffolk Street Lowell, MA 01854	Phone: (978) 970-5600 Fax: (978) 453-1995 E Mail: gmischel@trcsolutions.com	**Boring No.** BB-1 Scale 1" = 5'
City/Town: Lawrence	Bridge: L-04-030 (8JA)	Project File No: 608930	Contract No:
Project: RR BMRR over HWY, Manchester St.		Date & Time Started: 7-10-17 1145	Total Hours: 2
Groundwater Depth: 17'		Date & Time Completed: 7-10-17 1340	
Coordinates: N 3084683.1	E 742212.8	Driller: Geosearch, Inc.	Driller's Name: Joe Keenan and Josh Houde
Ground Elevation: 73.06'	Inspector's Name: Lauren Hopp	Inspector's Company: TRC Environmental, Corporation	

Sample Number	Depth Range (Feet)	Blow Counts per 6 Inches Coring Times Minute Per Foot				Recovery Inches	Field Description	Strata Changes
S-1	0-2'	WOH	4	5	4	14"	0 - 4": TOPSOIL 4 - 14": Dry, loose, light brown, FINE TO COARSE SAND, trace fine to medium gravel, trace silt (fill).	4'
S-2	5'-7"	WOH	2	2	2	16"	Dry, very loose, tan, FINE TO COARSE SAND, trace fine gravel, trace silt. Note: Top 3" contain ash, slag and glass (fill).	
S-3	10'-12'	1	1	2	12	14"	0-8", S-3a: Dry, very loose, tan, FINE TO COARSE SAND, trace fine gravel, trace silt, trace slag (fill). 8-14", S-3b: Moist, very loose, reddish brown, FINE SAND, trace silt and roots, trace gravel, (fill).	
S-4	12'-14'	4	4	4	4	12"	Moist, loose, reddish brown, FINE SAND, trace silt. Note: Top 3" contain slag and ash (fill).	
S-5	14'-16'	3	4	4	3	13"	Moist, loose, tan and black FINE SAND, trace silt, ash, roots, (fill).	
S-6	16'-18'	10	12	12	14	17.5"	Wet, medium dense, tan, FINE SAND, trace silt. Note: Top 4" contain fine sand mixed with ash and slag (fill).	18'
S-7	18'-20'	3	6	6	8	24"	Wet, medium dense, tan to light brown, FINE TO COARSE SAND, trace silt.	
S-8	20'-22'	2	2	2	3	12"	Wet, very loose, tan to light brown, FINE TO COARSE SAND, trace silt.	
S-9	25'-27'	12	21	23	24	15"	0-10", S-9a: Wet, dense, tan to light brown, FINE TO COARSE SAND, trace silt. 10-15", S-9a: Wet, dense, brown to gray FINE TO COARSE SAND, some fine to coarse gravel, some silt.	25.8'
S-10	30-32'	12	10	10	11	12"	Wet, medium dense, brown to gray, FINE TO COARSE SAND, some fine to coarse gravel, some silt.	32'
							Boring Terminated at 32'.	

Remarks: Hollow-stem Auger with automatic hammer to drive SPT split spoons.

Driller notes gravel and difficult drilling around 28 feet bgs.

Protective Device - Stand: Box:
Well Depth: Solid Pipe:
Stick Up Pipe: Screen Pipe:

Penetration Resistance (N) Guide:

Cohesionless Soils (Sands, Gravels)		Cohesive Soils (Silts, Clays)	
Relative Density	Penetration Resistance	Consistency	Penetration Resistance
Very Loose	0 - 4	Very Soft	0 - 2
Loose	4 - 10	Soft	2 - 4
Medium Dense	10 - 30	Medium Stiff	4 - 8
Dense	30 - 50	Stiff	8 - 15
Very Dense	Over 50	Very Stiff	15 - 30
N=Sum of Second and Third 6" Blow Counts		Hard	Over 30

Terms Used for Second Entry of Descriptions: and = 40-50%, some = 10-40%, trace = 10% or less

Type of Drill Rig: 55-LC
Arrow-Board: Signs: Cones:
Hollow Stem Auger.
Sampler Type: SPT Size: 2'
Automatic Hammer Weight: 140 lbs.
Fall: 30"
Core Barrel Type: Size:

EL. 75.0 / EL. 70.0 / EL. 60.0 / EL. 50.0 / EL. 40.0

EXIST. GROUND SURFACE
EL. = 73.06
EL. 71.80
PROP. BOT. OF S. ABUT. CAP

BOT. OF EXIST. S. ABUT. FTG.
ASSUMED EL. = 58.3±
EL. 56.06 (OBSERVED 7/10/17)
EL. 55.06
EL. 47.26
EL. 41.06

BORING BB–2

MassDOT	TRC Environmental Corporation 650 Suffolk Street Lowell, MA 01854	Phone: (978) 970-5600 Fax: (978) 453-1995 E Mail: gmischel@trcsolutions.com	**Boring No.** BB-2 Scale 1" = 5'
City/Town: Lawrence	Bridge: L-04-030 (8JA)	Project File No: 608930	Contract No:
Project: RR BMRR over HWY, Manchester St.		Date & Time Started: 7-7-17 0930	Total Hours: 2.25
Groundwater Depth: 17'		Date & Time Completed: 7-7-17 1140	
Coordinates: N 3084751.9	E 742160.5	Driller: Geosearch, Inc.	Driller's Name: Joe Keenan and Josh Houde
Ground Elevation: 73.71'	Inspector's Name: Lauren Hopp	Inspector's Company: TRC Environmental, Corporation	

Sample Number	Depth Range (Feet)	Blow Counts per 6 Inches Coring Times Minute Per Foot				Recovery Inches	Field Description	Strata Changes
S-1	0-2'	2	4	2	3	11"	0 - 4": TOPSOIL 4 - 11": Dry, loose, tan to light brown, FINE SAND, trace fine to medium gravel, trace silt (fill).	4'
S-2	5'-7"	3	3	2	2	11"	Moist, loose, tan to light brown, FINE SAND, trace fine to medium gravel, trace silt, trace ash. (fill).	
S-3	10'-12'	1	1	2	2	12"	Moist, very loose, tan and black, FINE SAND, trace silt. (fill)	
S-4	12'-14'	2	2	2	2	9.5"	Moist, very loose, tan and black, FINE SAND, trace silt, trace glass,(fill).	
S-5	14'-16'	1	WOH	1	WOH	13.5"	Moist, very loose, tan, FINE SAND, trace silt (fill).	
S-6	16'-18'	2	2	WOH	WOH	10"	Moist to wet, very loose, tan, FINE SAND, some silt, (fill).	
S-7	18'-20'	WOH	WOH	1 for 12"		24"	0-2", S-7a: Wet, very loose, tan, FINE SAND, trace silt, (fill). 2-24", S-7b: Wet, very soft, black, ORGANIC SILT.	18.2'
S-8	20'-22'	WOH				20"	0-20" S-8: Wet, very soft, dark black, ORGANIC SILT, trace sand.	
S-9	22'-24'	WOH				24"	0-24" S-9: Wet, very loose, black, FINE SAND and, ORGANIC SILT.	
S-10	24'-26'	6	7	8	7	24"	0-12" S-10a: Wet, Stiff, Black, ORGANIC SILT. 12-24", S-10b: Wet, medium dense, tan, FINE SAND, trace silt.	25'
S-11	30-32'	16	15	15	14	5"	Wet, dense, tan to light brown, FINE TO COARSE SAND, some gravel, some silt.	
S-12	32'-34'	16	15	30	20	20"	Wet, dense, FINE TO COARSE SAND AND FINE TO MEDIUM GRAVEL, some silt, trace clay.	34'
							Boring Terminated at 34'.	

Remarks: Hollow-stem Auger with automatic hammer to drive SPT split spoons.

Driller notes gravel and difficult drilling around 28'.

Protective Device - Stand: Box:
Well Depth: Solid Pipe:
Stick Up Pipe: Screen Pipe:

Penetration Resistance (N) Guide:

Cohesionless Soils (Sands, Gravels)		Cohesive Soils (Silts, Clays)	
Relative Density	Penetration Resistance	Consistency	Penetration Resistance
Very Loose	0 - 4	Very Soft	0 - 2
Loose	4 - 10	Soft	2 - 4
Medium Dense	10 - 30	Medium Stiff	4 - 8
Dense	30 - 50	Stiff	8 - 15
Very Dense	Over 50	Very Stiff	15 - 30
N=Sum of Second and Third 6" Blow Counts		Hard	Over 30

Terms Used for Second Entry of Descriptions: and = 40-50%, some = 10-40%, trace = 10% or less

Type of Drill Rig: 850 Track Rig
Arrow-Board: Signs: Cones:
Hollow Stem Auger.
Sampler Type: SPT Size: 2'
Automatic Hammer Weight: 140 lbs.
Fall: 30"
Core Barrel Type: Size:

EL. 75.0 / EL. 70.0 / EL. 60.0 / EL. 50.0 / EL. 40.0

EXIST. GROUND SURFACE
EL. = 73.71
EL. 71.77
PROP. BOT. OF N. ABUT. CAP

BOT. OF EXIST. N. ABUT. FTG.
ASSUMED EL. = 58.3±
EL. 56.31 (OBSERVED 7/10/17)
EL. 48.71
EL. 39.71

LAWRENCE
LMRC RAIL TRAIL OVER MANCHESTER STREET

STATE	FED. AID PROJ. NO.	SHEET NO.	TOTAL SHEETS
MA	-	133	225
PROJECT FILE NO.	608930		

BORING LOGS

BORING NOTES:

1. LOCATION OF BORINGS SHOWN ON THE PLANS THUS: ⌖
2. BORINGS ARE TAKEN FOR PURPOSE OF DESIGN AND SHOW CONDITIONS AT BORING POINTS ONLY, BUT DO NOT NECESSARILY SHOW THE NATURE OF THE MATERIALS TO BE ENCOUNTERED DURING CONSTRUCTION.
3. WATER LEVELS SHOWN ON THE BORING LOGS WERE OBSERVED AT THE TIME OF TAKING BORINGS AND DO NOT NECESSARILY SHOW THE TRUE GROUND WATER LEVEL.
4. FIGURES IN COLUMNS INDICATE NUMBER OF BLOWS REQUIRED TO DRIVE A 1 3/8"I.D. SPLIT SPOON SAMPLER 6" USING A 140 POUND WEIGHT FALLING 30".
5. BORING SAMPLES ARE STORED AT A STORAGE FACILITY LOCATED ON ROUTE 114 (219 WINTHROP AVE) IN LAWRENCE, MA. THE CONTRACTOR MAY EXAMINE THE SOIL AND ROCK SAMPLES BY CONTACTING THE MASSDOT GEOTECHNICAL SECTION AT 10 PARK PLAZA, BOSTON, MA.
6. ALL BORINGS WERE MADE IN JULY 2017.
7. BORINGS WERE MADE BY GEOSEARCH, INC, 11 CHOCKSETT RD, STERLING, MA 01564.
8. THE NORTH AMERICAN VERTICAL DATUM (NAVD) OF 1988 IS USED THROUGHOUT.

DATE	DESCRIPTION
10/28/2022	FIRST STRUCTURAL SUBMITTAL

THIS SHEET IS APPROVED FOR CONSTRUCTION BY MASSDOT
AUTHORIZED SIGNATORY: _____ STATE BRIDGE ENGINEER
USE ONLY PRINTS OF LATEST DATE

FOR PERMITTING PURPOSES - NOT FOR CONSTRUCTION

608930_BR2-3(L04030).DWG Plotted on 28-Oct-2022 1:13 PM
Proposal No. 608930-128034
October 28, 2022
First Structural Submittal (S1)
A00869 - 152

STATE	FED. AID PROJ. NO.	SHEET NO.	TOTAL SHEETS
MA	-	134	225
PROJECT FILE NO.	608930		

DEMOLITION DETAILS

608930_BR4(L04030).DWG Plotted on 28-Oct-2022 1:13 PM

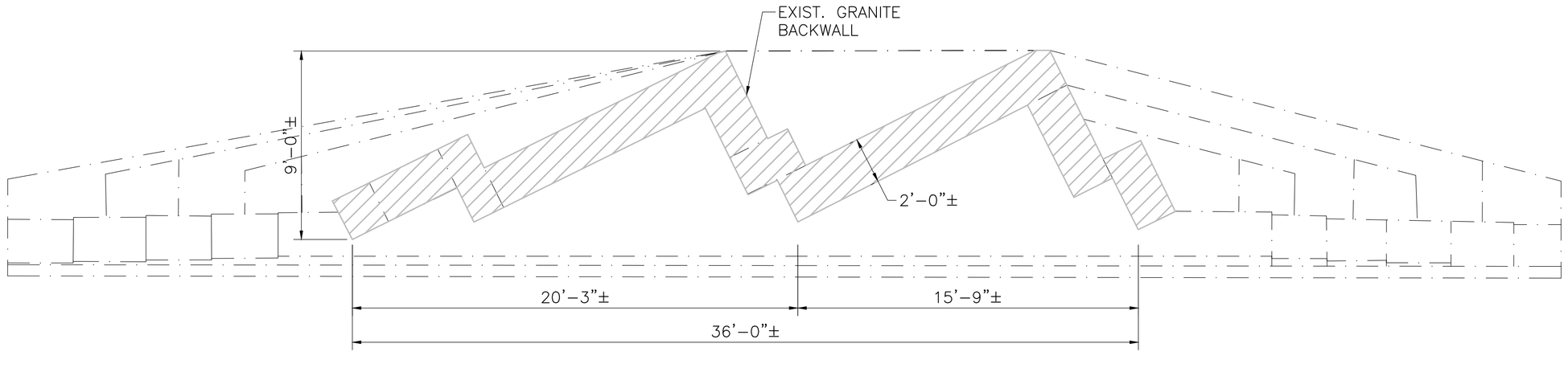

PLAN – EXISTING NORTH ABUTMENT
(SOUTH ABUTMENT SIMILAR)
SCALE: ¼" = 1'-0"

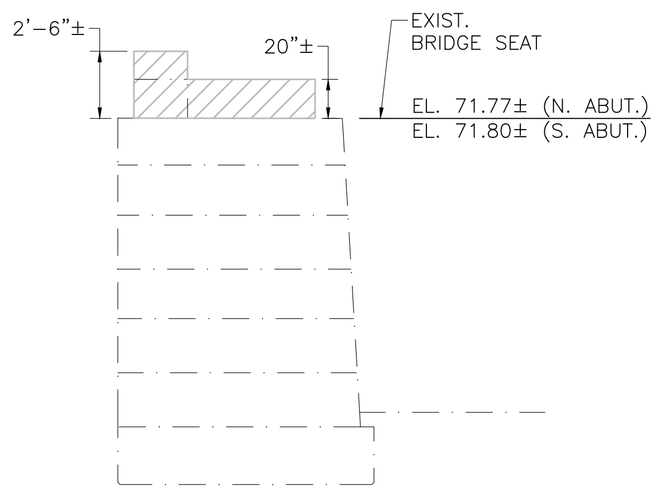

EXISTING ABUTMENT SECTION
SCALE: ¼" = 1'-0"

LEGEND:

DENOTES LIMIT OF EXISTING SUBSTRUCTURE TO BE DEMOLISHED

10/28/2022	FIRST STRUCTURAL SUBMITTAL
DATE	DESCRIPTION

THIS SHEET IS APPROVED FOR CONSTRUCTION BY MASSDOT
AUTHORIZED SIGNATORY: _____ STATE BRIDGE ENGINEER
USE ONLY PRINTS OF LATEST DATE

FOR PERMITTING PURPOSES - NOT FOR CONSTRUCTION

A00869 - 153

Proposal No. 608930-128034

October 28, 2022
First Structural Submittal (S1)

LAWRENCE
LMRC RAIL TRAIL OVER MANCHESTER STREET

STATE	FED. AID PROJ. NO.	SHEET NO.	TOTAL SHEETS
MA	-	135	225
PROJECT FILE NO.	608930		

PLAN AND ELEVATION

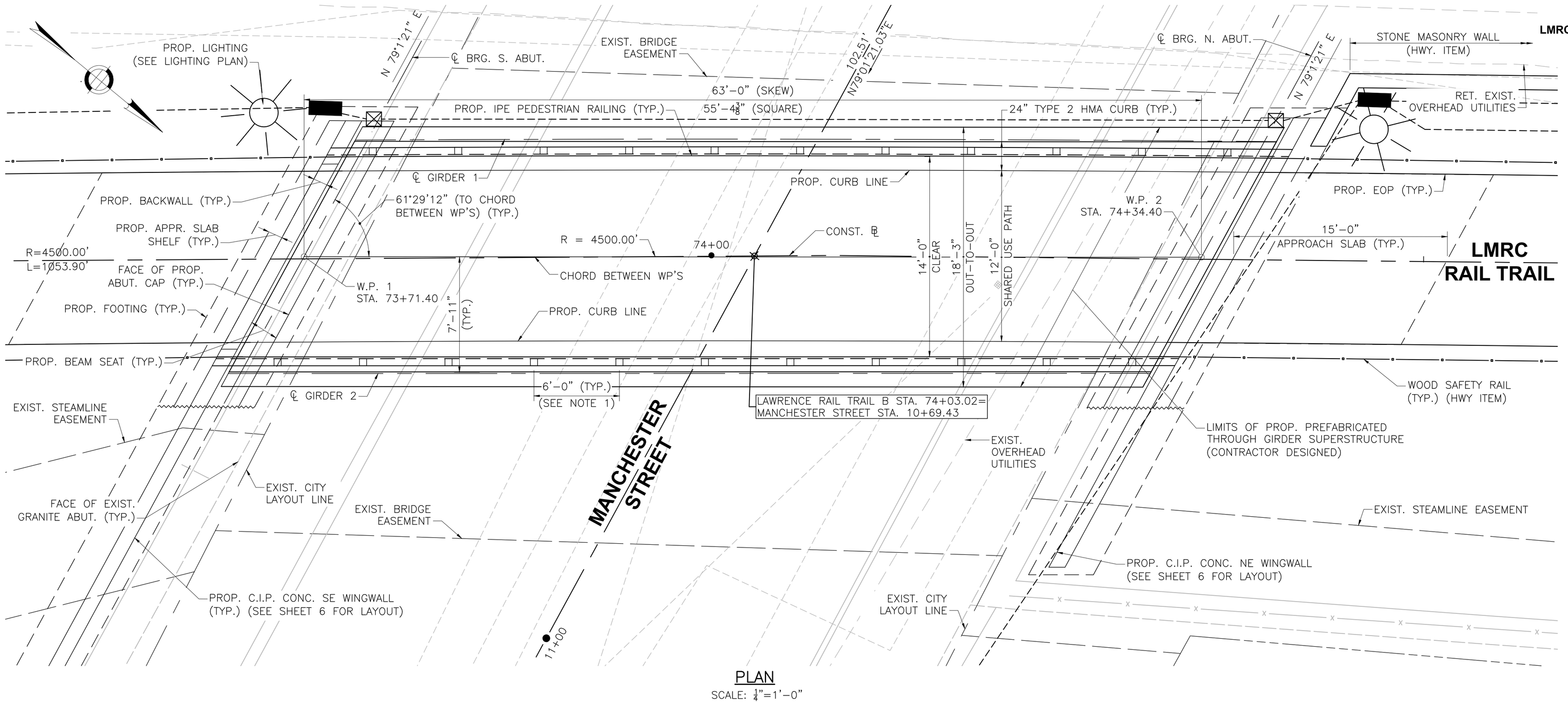

PLAN

SCALE: ¼"=1'-0"

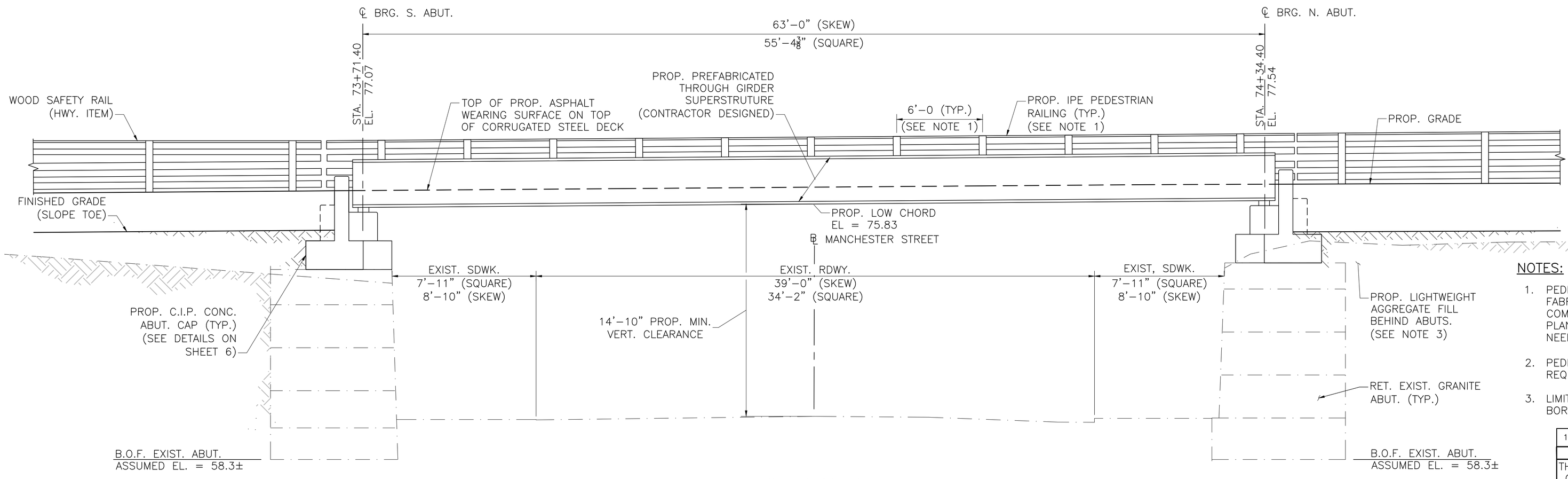

EAST ELEVATION

SCALE: ¼" = 1'-0"

NOTES:

1. PEDESTRIAN RAILING TO BE PROVIDED BY BRIDGE FABRICATOR AND SHALL BE CONSISTENT AND COMPATIBLE WITH WOOD SAFETY RAIL, SEE HIGHWAY PLANS. POST SPACING SHOWN MAY BE ADJUSTED AS NEEDED BY THE BRIDGE FABRICATOR.
2. PEDESTRIAN RAILING SHALL MEET ADA/MA AAB REQUIREMENTS.
3. LIMITS OF LIGHTWEIGHT AGGREGATE FILL AND GRAVEL BORROW FOR BACKFILLING SHOWN ON SHEET 7.

10/28/2022	FIRST STRUCTURAL SUBMITTAL
DATE	DESCRIPTION

THIS SHEET IS APPROVED FOR CONSTRUCTION BY MASSDOT
AUTHORIZED SIGNATORY: _____ STATE BRIDGE ENGINEER
USE ONLY PRINTS OF LATEST DATE

SHEET 5 OF 7 SHEETS BRIDGE NO. L-04-030 (8JA)

FOR PERMITTING PURPOSES - NOT FOR CONSTRUCTION

608930_BR5(L04030).DWG Plotted on 28-Oct-2022 1:13 PM
Proposal No. 608930-128034
First Structural Submittal (S1) October 28, 2022

LAWRENCE
LMRC RAIL TRAIL OVER MANCHESTER STREET

STATE	FED. AID PROJ. NO.	SHEET NO.	TOTAL SHEETS
MA	-	136	225
PROJECT FILE NO.	608930		

ABUTMENT PLAN AND ELEVATION

608930_BR6(L04030).DWG Plotted on 28-Oct-2022 1:13 PM

Proposal No. 608930-128034

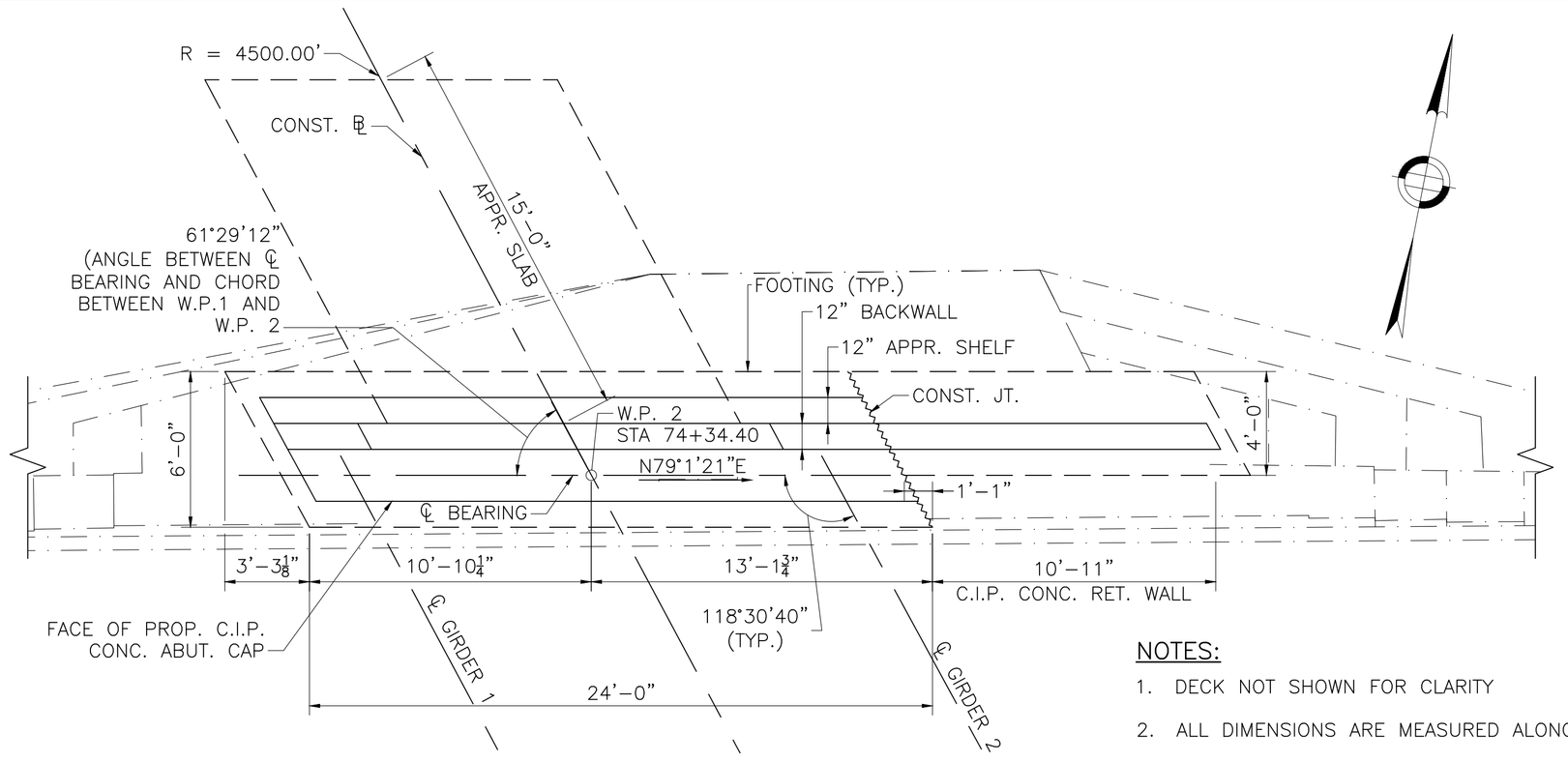

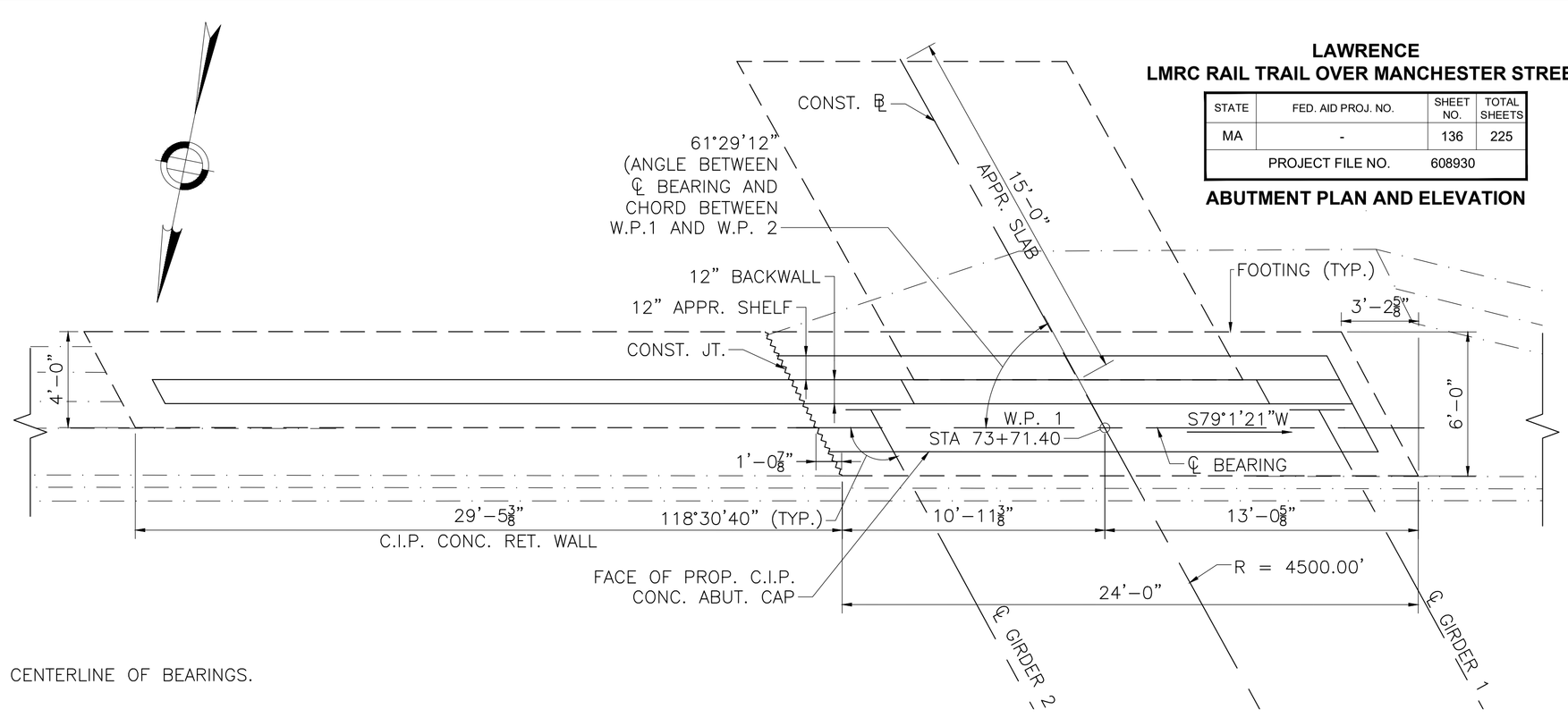

PLAN – NORTH ABUTMENT

SCALE: ¼" = 1'–0"

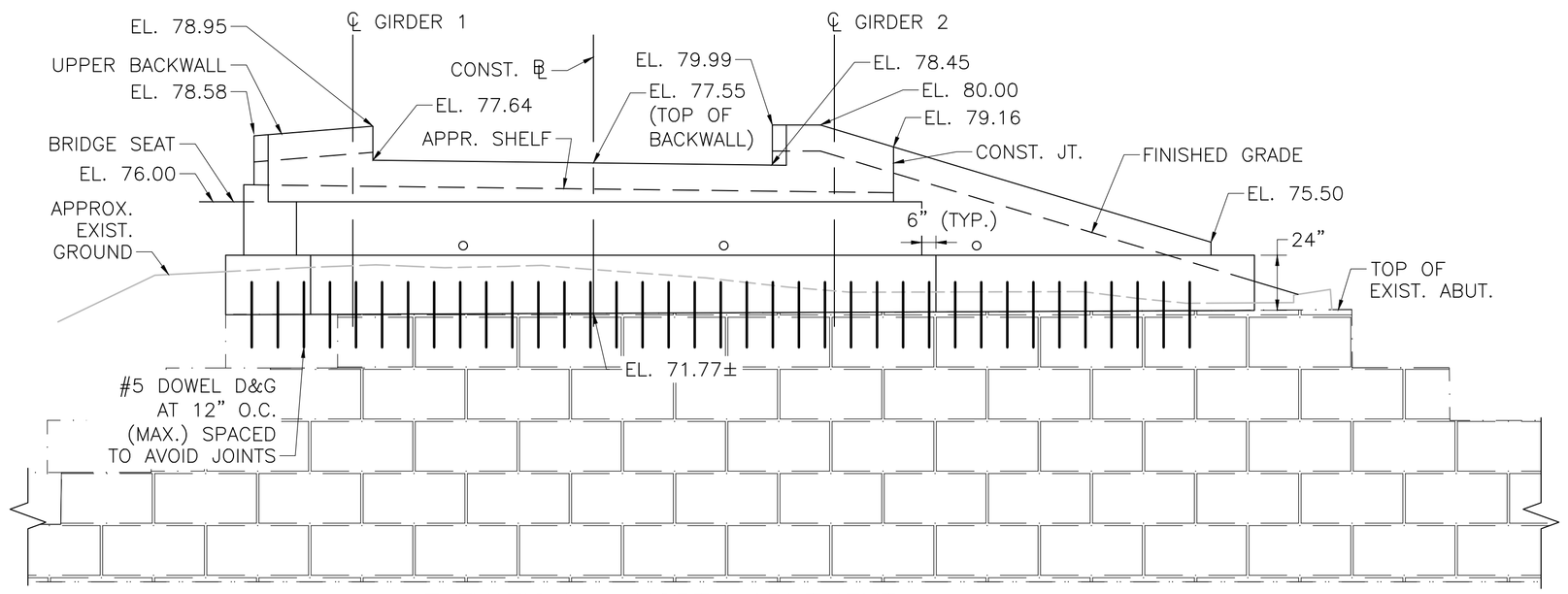

PLAN – SOUTH ABUTMENT

SCALE: ¼" = 1'–0"

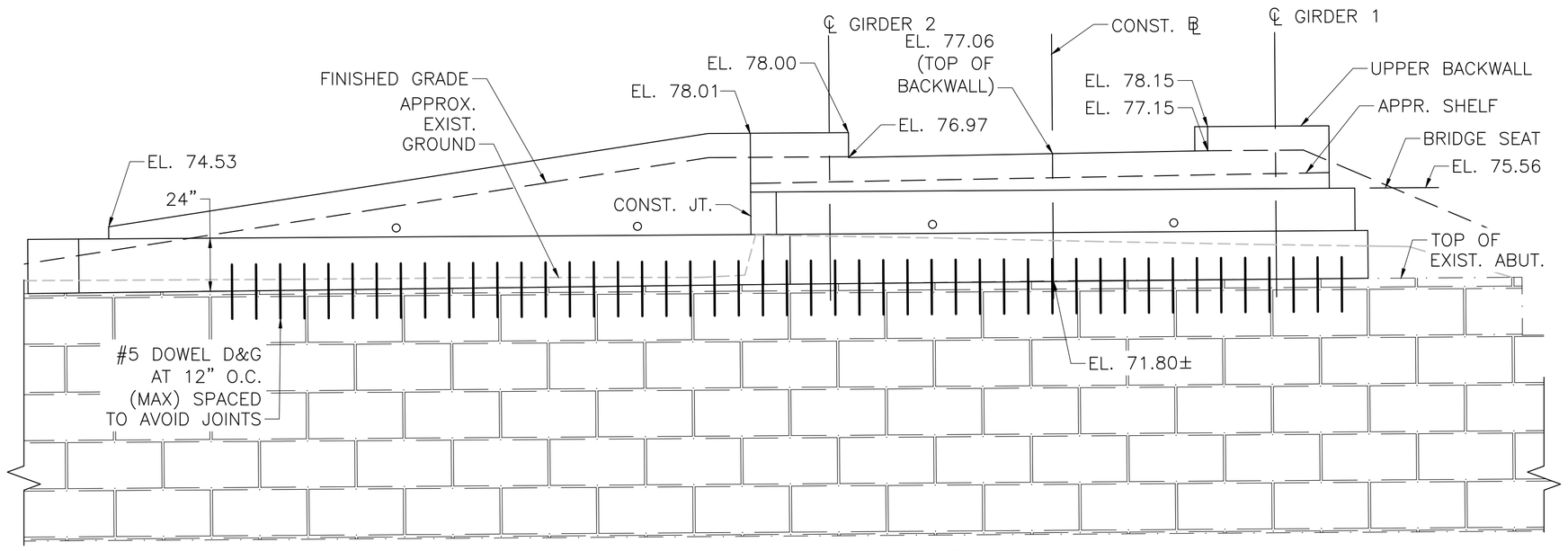

ELEVATION – NORTH ABUTMENT

SCALE: ¼" = 1'–0"

ELEVATION – SOUTH ABUTMENT

SCALE: ¼" = 1'–0"

NOTES:

1. DECK NOT SHOWN FOR CLARITY
2. ALL DIMENSIONS ARE MEASURED ALONG CENTERLINE OF BEARINGS.

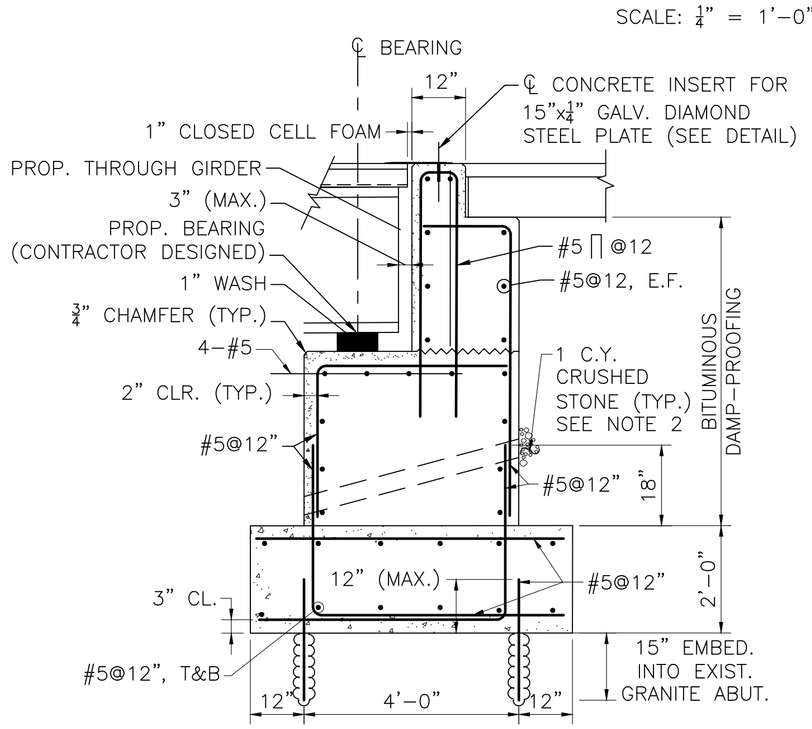

TYPICAL ABUTMENT SECTION

SCALE: ½" = 1'–0"

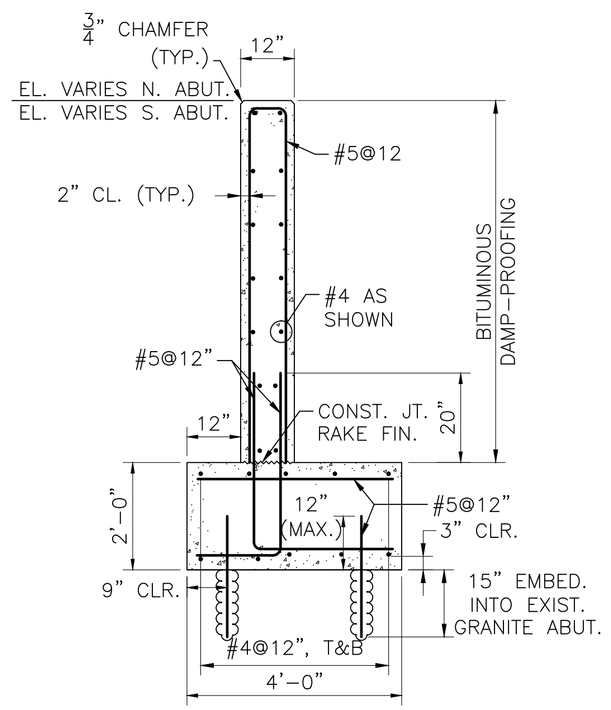

TYPICAL WINGWALL SECTION

SCALE: ½" = 1'–0"

ABUTMENT AND WINGWALL NOTES:

1. MEMBRANE WATERPROOFING AND 8"x16"x2", 4000 PSI, 3/4 INCH, 610 CEMENT CONCRETE BLOCKS LAID IN MORTAR OR OTHER WATERPROOFING PROTECTIVE COURSE, MIN. 2" THICK AS SPECIFIED IN MASSDOT STANDARD SPECIFICATIONS.
2. 4" ø WEEP HOLES 10'–0" O.C. (JUST ABOVE PROTECTIVE COURSE). PROVIDE 1 CUBIC YARD OF CRUSHED STONE AT EACH END OF WEEP HOLE.
3. ALL CONCRETE SHALL BE 4000 PSI, 1.5 INCH, 565 CEMENT CONCRETE EXCEPT THE ABUTMENT BACKWALL AND WINGWALL STEMS, WHICH SHALL BE 4000 PSI, 3/4 INCH, 610 CEMENT CONCRETE.
4. BRIDGE SEAT ELEVATIONS ARE BOTTOM OF MASONRY PLATE ELEVATIONS AT CENTERLINE OF BEARING. THE BRIDGE SEAT ELEVATIONS SHOWN ARE PRELIMINARY AND BASED ON AN ASSUMED STRUCTURE DEPTH OF 1'–6" FROM TOP OF DECK AT ℄ OF CONSTRUCTION TO BOTTOM OF MASONRY PLATE. ACTUAL ELEVATION SHALL BE BASED ON CONTRACTOR DESIGN CHOSEN TYPE AS REQUIRED BY THE BRIDGE MANUFACTURER. MINIMUM LOW CHORD ELEVATION IS SHOWN ON THE ELEVATION VIEW. THE CONTRACTOR SHALL DETERMINE THE FINAL BRIDGE SEAT ELEVATIONS PRIOR TO SUBMITTING REINFORCING STEEL FABRICATION DRAWINGS.
5. THE FACTORED BEARING PRESSURE AT THE ABUTMENT = 6.41 KSF, PER AASHTO LRFD BRIDGE DESIGN SPECIFICATIONS STRENGTH 1 LIMIT STATE. FACTORED BEARING RESISTANCE AT THE ABUTMENTS = 7.4 KSF. FACTORED BEARING RESISTANCE IS THE PRODUCT OF THE NOMINAL BEARING RESISTANCE AND A RESISTANCE FACTOR OF 0.45.
6. SEE MISCELLANEOUS DETAILS FOR LIMITS OF LIGHTWEIGHT AGGREGATE FILL. USE GRAVEL BORROW FOR AREA BEYOND LIMITS OF LIGHTWEIGHT AGGREGATE FILL.
7. THE FACTORED BEARING PRESSURE AT THE SOUTHEAST AND NORTHEAST WINGWALL = 4.34 KSF, PER AASTO LRFD BRIDGE DESIGN SPECIFICATIONS STRENGTH 1 LIMIT STATE. FACTORED BEARING RESISTANCE AT THE SOUTHEAST AND NORTHEAST WINGWALL = 6.0 KSF. FACTORED BEARING RESISTANCE IS THE PRODUCT OF THE NOMINAL BEARING RESISTANCE AND A RESISTANCE FACTOR OF 0.45.
8. THE FACTORED BEARING PRESSURE AT THE NORTHWEST WINGWALL = 4.78 KSF, PER AASTO LRFD BRIDGE DESIGN SPECIFICATIONS STRENGTH 1 LIMIT STATE. FACTORED BEARING RESISTANCE AT THE NORTHWEST WINGWALL = 5.1 KSF. FACTORED BEARING RESISTANCE IS THE PRODUCT OF THE NOMINAL BEARING RESISTANCE AND A RESISTANCE FACTOR OF 0.45.

10/28/2022	FIRST STRUCTURAL SUBMITTAL
DATE	DESCRIPTION

THIS SHEET IS APPROVED FOR CONSTRUCTION BY MASSDOT
AUTHORIZED SIGNATORY: _____ STATE BRIDGE ENGINEER
USE ONLY PRINTS OF LATEST DATE

FOR PERMITTING PURPOSES - NOT FOR CONSTRUCTION

First Structural Submittal (S1) October 28, 2022

STATE	FED. AID PROJ. NO.	SHEET NO.	TOTAL SHEETS
MA	-	137	225
PROJECT FILE NO.	608930		

MISCELLANEOUS DETAILS

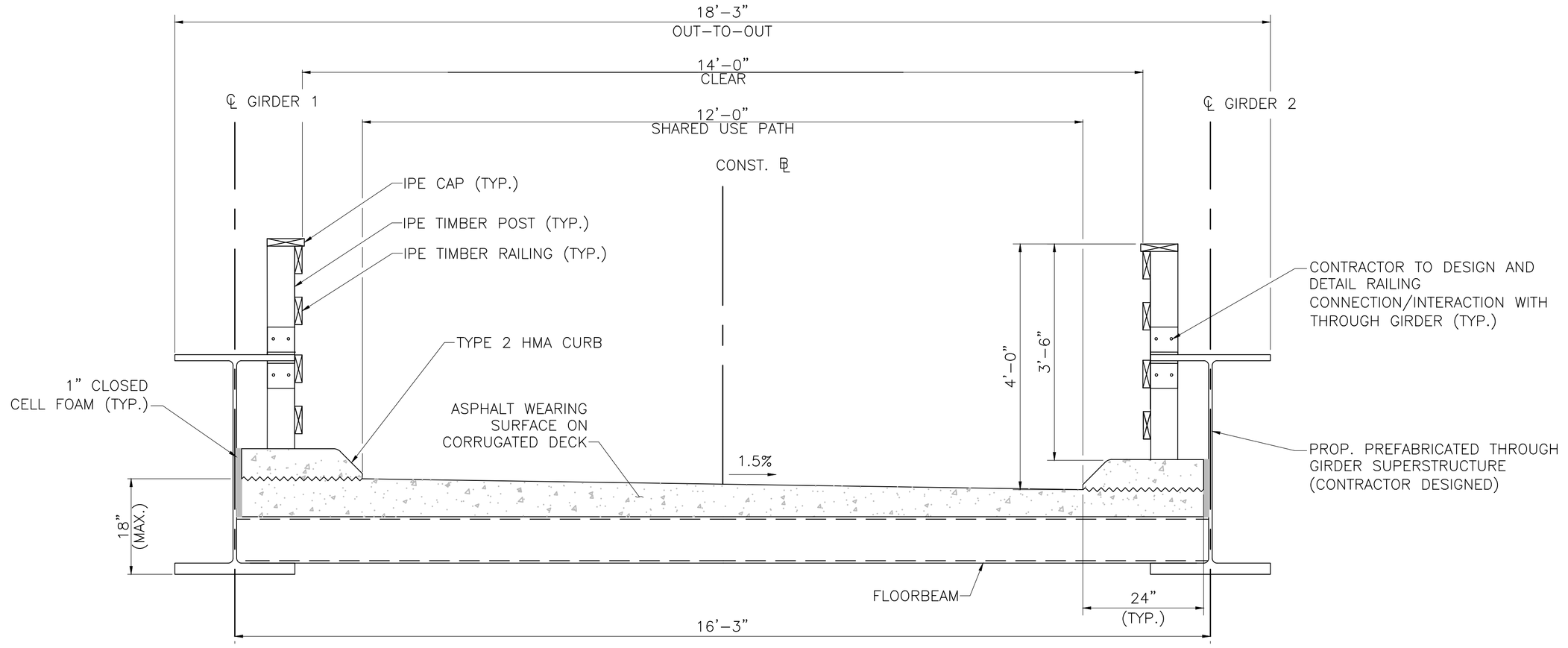

TYPICAL TRANSVERSE SECTION
(LOOKING UPSTATION)
SCALE: ¾" = 1'–0"

PREFABRICATED BRIDGE NOTES:

1. IN ACCORDANCE WITH THE 2009 AASHTO LRFD GUIDE SPECIFICATIONS FOR THE DESIGN OF PEDESTRIAN BRIDGES WITH INTERIM SPECIFICATIONS THROUGH 2015 FOR PEDESTRIAN LOADING OF 90 PSF AND H10 LOADING.
2. TOTAL ASSUMED PREFABRICATED WEIGHT OF SUPERSTRUCTURE, INCLUDING DECK, SHALL NOT EXCEED 50 KIPS WITHOUT WRITTEN APPROVAL OF THE ENGINEER.
3. STRUCTURAL MEMBERS ARE SHOWN FOR CONCEPTUAL PRESENTATION ONLY AND TO BE FINALIZED BY APPROVED BRIDGE MANUFACTURER.
4. PREFABRICATED BRIDGE SHALL BE GALVANIZED AND PAINTED.
5. CONTRACTOR'S DESIGN SHALL INCLUDE ALL BEARING DEVICES AND VERIFICATION OF ALL ELEVATIONS TO ACCOMMODATE THE DESIGN.

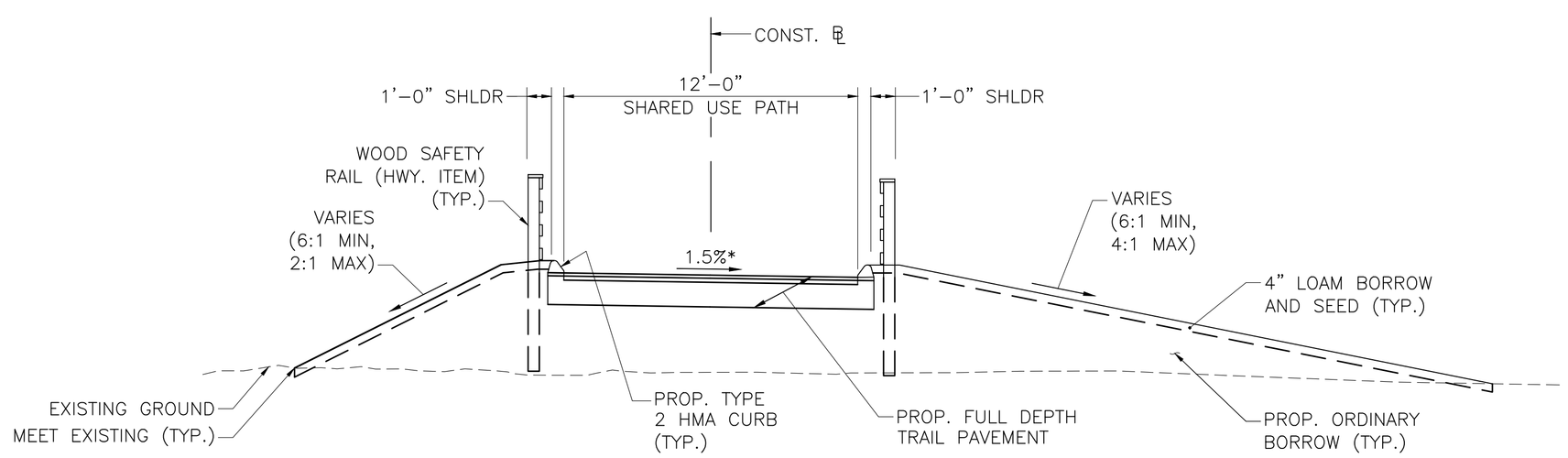

TYPICAL APPROACH SECTION
SCALE: ¼" = 1'–0"

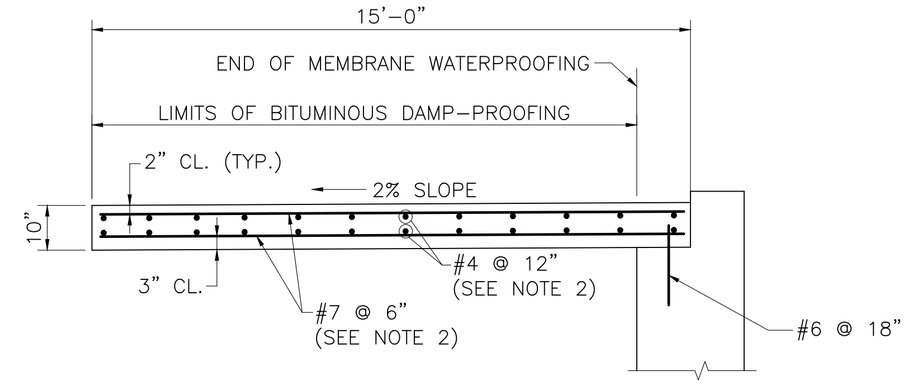

NOTES:
1. APPROACH SLAB TO BE 4000 PSI, 1.5 INCH, 565 CEMENT CONCRETE.
2. PLACE LONGITUDINAL REINFORCEMENT PARALLEL TO CENTERLINE OF CONSTRUCTION. PLACE TRANSVERSE REINFORCEMENT PARALLEL TO ABUTMENT.

APPROACH SLAB DETAILS
SCALE: ½" = 1'–0"

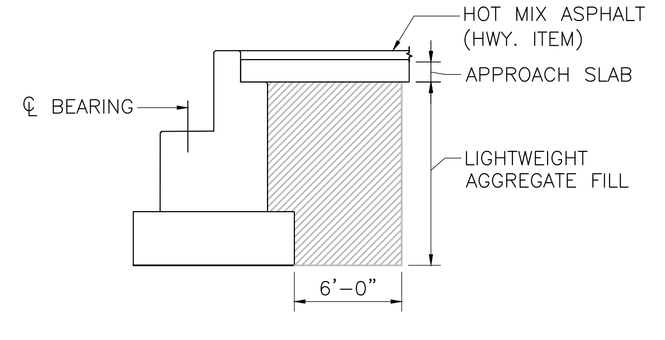

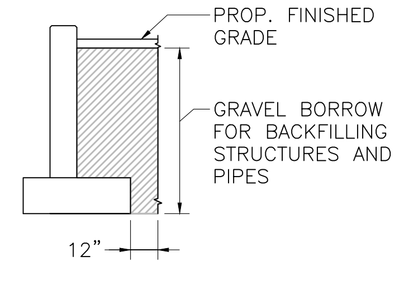

ABUTMENT WINGWALL

NOTES:
1. HATCHED AREA INDICATES LIMITS OF BACKFILL.
2. LIGHTWEIGHT AGGREGATE FILL SHALL NOT EXTEND BEYOND ABUTMENT FOOTING.

PAYMENT LIMITS FOR LIGHTWEIGHT AGGREGATE FILL AND GRAVEL BORROW
NOT TO SCALE

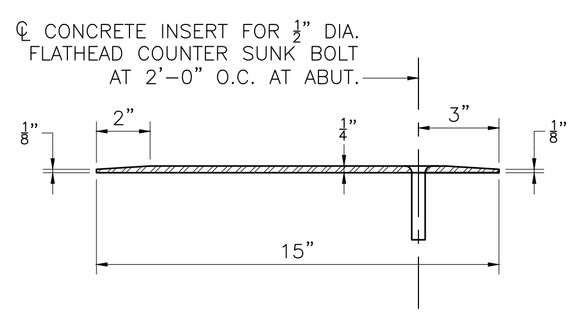

DIAMOND STEEL PLATE DETAIL
SCALE: 3" = 1'–0"

10/28/2022	FIRST STRUCTURAL SUBMITTAL
DATE	DESCRIPTION
THIS SHEET IS APPROVED FOR CONSTRUCTION BY MASSDOT AUTHORIZED SIGNATORY:	STATE BRIDGE ENGINEER
USE ONLY PRINTS OF LATEST DATE	

608930_BR7(L04030).DWG Plotted on 28-Oct-2022 1:13 PM
Proposal No. 608930-128034
October 28, 2022
First Structural Submittal (S1)
A00869 - 156
FOR PERMITTING PURPOSES - NOT FOR CONSTRUCTION

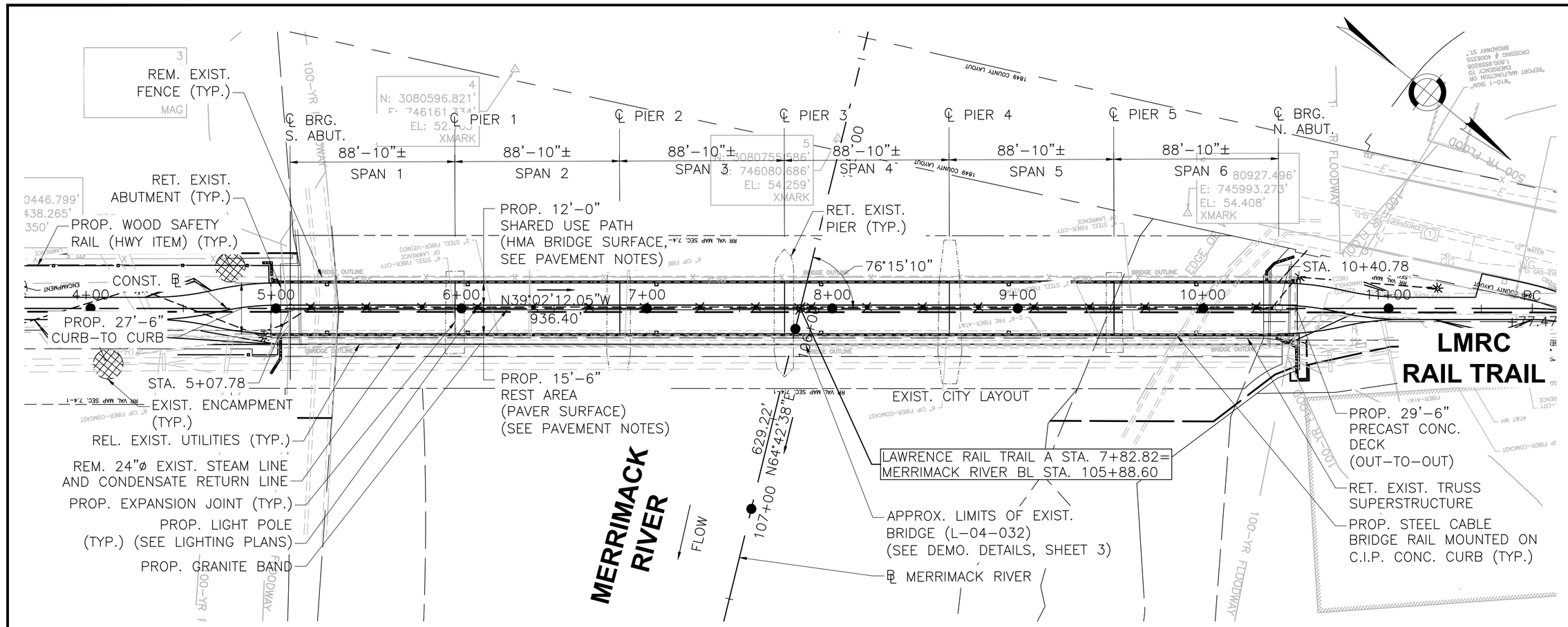

KEY PLAN
SCALE: 1"=40'

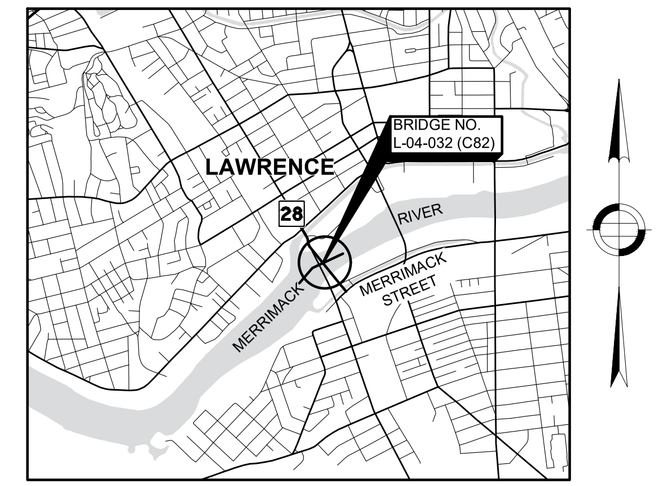

LOCUS MAP
SCALE: 1"=2000'

LAWRENCE
LMRC RAIL TRAIL OVER MERRIMACK RIVER

STATE	FED. AID PROJ. NO.	SHEET NO.	TOTAL SHEETS
MA	-	138	225
PROJECT FILE NO.		608930	

KEY PLAN, PROFILES, LOCUS AND INDEX

INDEX OF SHEETS

SHEET NUMBER	SHEET TITLE
1	KEY PLAN, PROFILES, LOCUS AND INDEX
2	GENERAL NOTES
3	DEMOLITION DETAILS
4	PLAN AND ELEVATION
5	FRAMING PLAN
6	STRINGER REPLACEMENT DETAILS
7	DECK DETAILS (1 OF 2)
8	DECK DETAILS (2 OF 2)
9	MISCELLANEOUS DETAILS
10	EXPANSION JOINT DETAILS
11	RAILING DETAILS (1 OF 2)
12	RAILING DETAILS (2 OF 2)

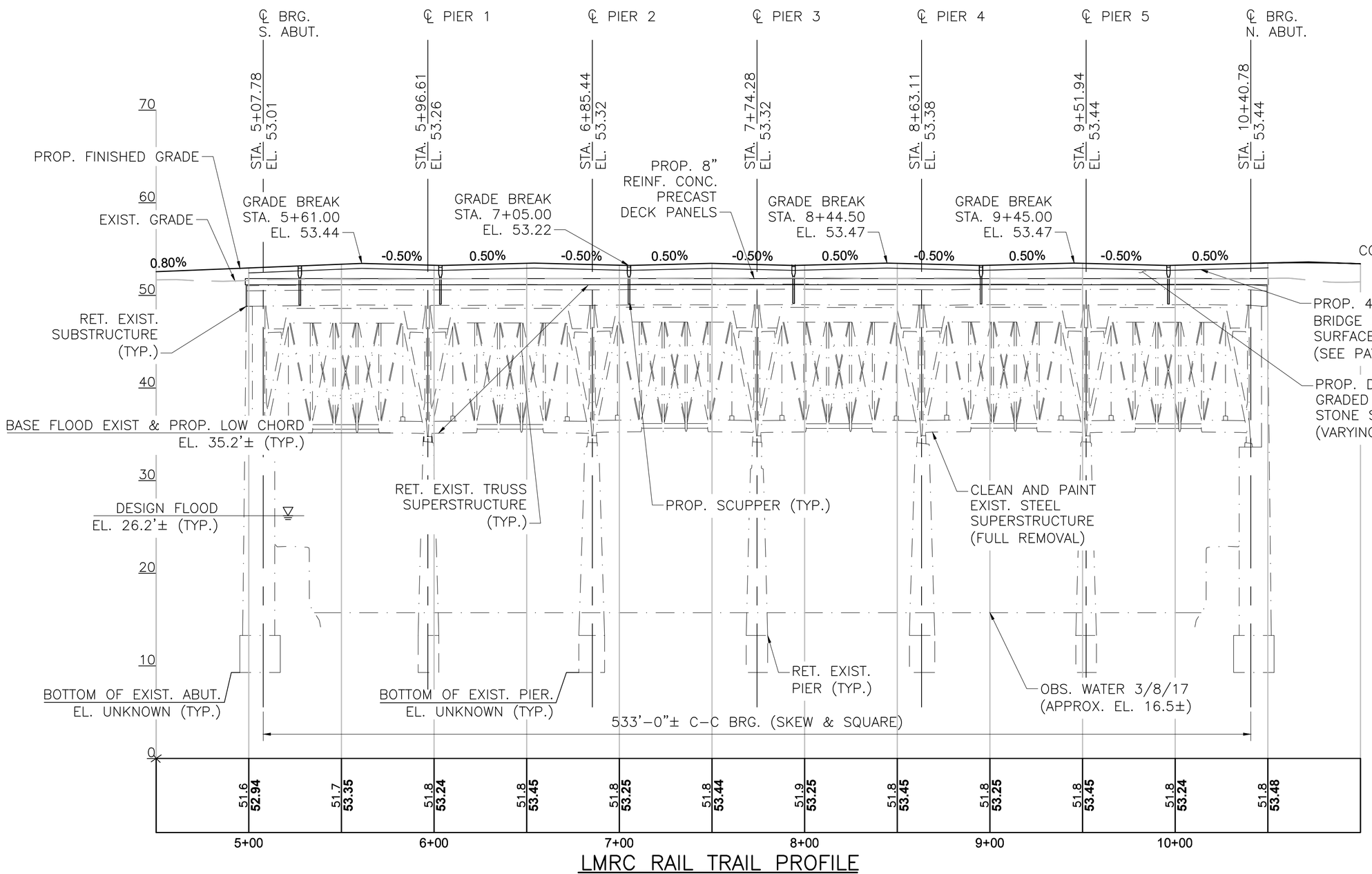

LMRC RAIL TRAIL PROFILE
HORIZONTAL SCALE: 1" = 40'
VERTICAL SCALE" 1" = 8'

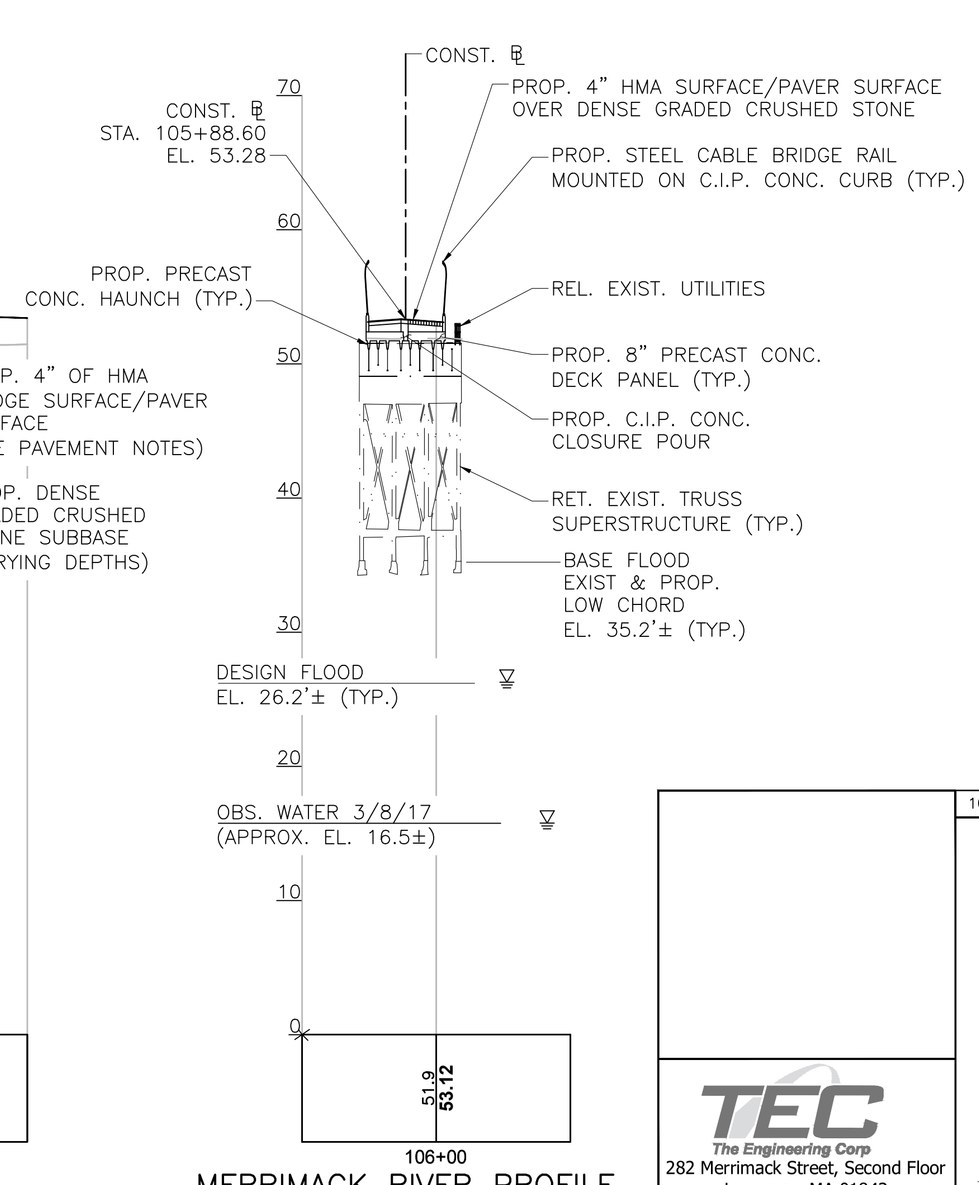

MERRIMACK RIVER PROFILE
HORIZONTAL SCALE: 1" = 40'
VERTICAL SCALE" 1" = 8'

10/28/2022	FIRST STRUCTURAL SUBMITTAL

MassDOT Massachusetts Department of Transportation Highway Division

PROPOSED BRIDGE REHABILITATION

LAWRENCE

LMRC RAIL TRAIL
OVER MERRIMACK RIVER

MASSACHUSETTS DEPARTMENT OF TRANSPORTATION
HIGHWAY DIVISION
10 PARK PLAZA BOSTON, MASS

TEC The Engineering Corp
282 Merrimack Street, Second Floor
Lawrence, MA 01843
978-794-1792

STATE BRIDGE ENGINEER

CHIEF ENGINEER

FOR PERMITTING PURPOSES - NOT FOR CONSTRUCTION

608930_BR1(L04032).DWG Plotted on 28-Oct-2022 12:22 PM
Proposal No. 608930-128034
October 28, 2022
First Structural Submittal (S1)
A00869 - 157

LAWRENCE
LMRC RAIL TRAIL OVER MERRIMACK RIVER

STATE	FED. AID PROJ. NO.	SHEET NO.	TOTAL SHEETS
MA	-	139	225
PROJECT FILE NO.	608930		

GENERAL NOTES

DESIGN:

IN ACCORDANCE WITH THE 2020 AASHTO LRFD BRIDGE DESIGN SPECIFICATIONS, 9TH EDITION, AND THE 2ND EDITION AASHTO LRFD GUIDE SPECIFICATIONS FOR THE DESIGN OF PEDESTRIAN BRIDGES WITH INTERIM REVISIONS THROUGH 2015, FOR H10 LOADING AND 90 PSF PEDESTRIAN LOADING.

SURVEY BENCHMARKS:

BENCHMARK 2: MAG NAIL (38)
N: 3080755.586
E: 746080.686
ELEVATION= 54.259'

BENCHMARK 3: MAG NAIL (40)
N: 3080483.024
E: 746268.082
ELEVATION= 44.630'

BENCHMARK 4: XMARK
N: 3080596.821
E: 746161.334
ELEVATION= 52.165'

BENCHMARK 5: XMARK
N: 3080755.586
E: 746080.686
ELEVATION= 54.259'

BENCHMARK 6: XMARK
N: 3080927.496
E: 745993.273
ELEVATION= 54.408'

ELEVATIONS ARE BASED ON THE NORTH AMERICAN VERTICAL DATUM (NAVD) OF 1988.

THE CONTRACTOR SHALL BE RESPONSIBLE FOR CONDUCTING A SURVEY TO FIELD VERIFY ALL EXISTING CONDITIONS AND DIMENSIONS PRIOR TO THE FABRICATION OF ANY PRECAST CONCRETE ELEMENTS.

SCALES:

SCALES NOTED ON THE PLANS ARE NOT APPLICABLE TO REDUCED SIZE PRINTS. DIVIDE SCALES BY 2 FOR HALF-SIZE PRINTS (A3).

UTILITIES:

DURING CONSTRUCTION, THE CONTRACTOR SHALL LOCATE AND PROTECT FROM DAMAGE ALL UTILITIES THAT ARE TO REMAIN IN PLACE.

GEOTECHNICAL:

NO GEOTECHNICAL TESTING WAS PERFORMED AT THIS LOCATION.

STRUCTURAL STEEL

1. ALL STRUCTURAL STEEL SHALL BE AASHTO M270 (A709) GRADE 50, UNLESS OTHERWISE NOTED.
2. ALL BOLTS SHALL BE IN ACCORDANCE WITH ASTM F3125 GRADE 325 UNLESS OTHERWISE NOTED.
3. ALL BOLT HOLES SHALL BE $\frac{15}{16}$"ø UNLESS NOTED OTHERWISE.
4. ALL BOLTED CONNECTIONS SHALL BE CONSIDERED SLIP CRITICAL CONNECTIONS WITH CLASS C FAYING SURFACES.
5. SHEAR CONNECTORS SHALL BE IN ACCORDANCE WITH AASHTO M169 GRADES 1015 OR 1020.
6. ALL PROPOSED STRUCTURAL STEEL SHALL BE HOT DIP GALVANIZED.
7. ANCHOR BOLTS FOR LIGHT POLE BASES SHALL BE ASTM F1554 GRADE 55.

REINFORCEMENT

ALL REINFORCING STEEL SHALL BE EPOXY COATED.

REINFORCING STEEL SHALL CONFORM TO THE REQUIREMENTS OF AASHTO M 31 GRADE 60. UNLESS OTHERWISE NOTED ON THE CONSTRUCTION DRAWINGS, ALL BARS SHALL BE LAPPED AS FOLLOWS:

MODIFICATION CONDITION:	#4 BARS	#5 BARS	#6 BARS
1. NONE	16"	19"	23"
2. 12" OF CONCRETE BELOW BAR	20"	25"	30"
3. EPOXY COATED BARS, COVER < 3db, OR CLEAR SPACING < 6db	23"	29"	34"
4. COATED BARS, ALL OTHER CASES	18"	23"	27"
5. CONDITION 2. AND 3.	26"	32"	39"
6. CONDITION 2. AND 4.	24"	30"	36"

ALL OTHER BARS SHALL BE LAPPED AS SHOWN ON THE CONSTRUCTION DRAWINGS.

CONCRETE

PRECAST ELEMENTS:

THE FABRICATOR IS RESPONSIBLE FOR THE DESIGN AND INSTALLATION OF LIFT HOOKS FOR ALL PRECAST ELEMENTS. UNDER NO CIRCUMSTANCES WILL THE REBAR ELEMENTS SHOWN ON THE PLAN BE USED TO LIFT THE PRECAST ELEMENTS. FOR ADDITIONAL REQUIREMENTS, REFER TO THE "PRECAST DECK PANELS" SECTION OF ITEM 992.1.

PRECAST CONCRETE:
4000 PSI, $\frac{3}{4}$", 585 HP CEMENT CONCRETE: DECK PANELS

CAST-IN-PLACE CONCRETE:
4000 PSI, $\frac{3}{4}$", 585 HP CEMENT CONCRETE: SAFETY CURB, CLOSURE POUR, CONCRETE RETAINER

MEMBRANE WATERPROOFING:

ALL MEMBRANE WATERPROOFING USED ON BRIDGE DECKS SHALL BE MEMBRANE WATERPROOFING FOR BRIDGE DECKS - SPRAY APPLIED.

ESTIMATED QUANTITIES
(NOT GUARANTEED)

ITEM DESCRIPTION	QUANTITY	UNITS
PARTIAL DEMOLITION OF SUPERSTRUCTURE OF BRIDGE NO. L-04-032 (C82)	1	LS
DENSE GRADED CRUSHED STONE FOR SUB-BASE	785	TON
SUPERPAVE BRIDGE SURFACE COURSE - 9.5 (SSC-B - 9.5)	60	TON
SUPERPAVE BRIDGE PROTECTIVE COURSE - 9.5 (SPC-B - 9.5)	100	TON
STRUCTURAL STEEL-COATED STEEL BRIDGE NO. L-04-032 (C82)	66000	LB
CLEAN AND PAINT (FULL REMOVAL) STEEL BRIDGE NO. L-04-032 (C82)	1	LS
ALTERATION TO BRIDGE STRUCTURE NO. L-04-032 (C82)	1	LS
TEMPORARY PROTECTIVE SHIELDING, BRIDGE NO. L-04-032 (C82)	1	LS

HYDRAULIC DESIGN DATA	
DRAINAGE AREA (SQ. MILES)	4660
DESIGN FLOOD DISCHARGE (C.F.S.)	58,000
DESIGN FLOOD FREQUENCY (YEARS)	10
DESIGN FLOOD VELOCITY (F.P.S.)	N/A
DESIGN FLOOD ELEVATION (FEET, NAVD)	26.20
BASE (100-YEAR) FLOOD DATA	
BASE FLOOD DISCHARGE (C.F.S.)	111,000
BASE FLOOD ELEVATION (FEET, NAVD)	35.20
DESIGN AND CHECK SCOUR DATA	
DESIGN SCOUR FLOOD EVENT RETURN FREQUENCY (YEARS)	25
DESIGN FLOOD ABUTMENT SCOUR DEPTH (FEET)	N/A
DESIGN FLOOD PIER SCOUR DEPTH (FEET)	N/A
CHECK SCOUR FLOOD EVENT RETURN FREQUENCY (YEARS)	50
CHECK FLOOD ABUTMENT SCOUR DEPTH (FEET)	N/A
CHECK FLOOD PIER SCOUR DEPTH (FEET)	N/A
FLOOD OF RECORD	
DISCHARGE (C.F.S.)	N/A
FREQUENCY (IF KNOWN, YEARS)	N/A
MAXIMUM ELEVATION (FEET, NAVD)	N/A
DATE (MM/YYYY)	N/A
HISTORY OF ICE FLOES	N/A
EVIDENCE OF SCOUR AND EROSION	N/A

10/28/2022	FIRST STRUCTURAL SUBMITTAL
DATE	DESCRIPTION
THIS SHEET IS APPROVED FOR CONSTRUCTION BY MASSDOT AUTHORIZED SIGNATORY:	STATE BRIDGE ENGINEER
USE ONLY PRINTS OF LATEST DATE	

FOR PERMITTING PURPOSES - NOT FOR CONSTRUCTION

608930_BR2(L04032).DWG Plotted on 28-Oct-2022 12:22 PM
Proposal No. 608930-128034
October 28, 2022
First Structural Submittal (S1)
A00869 - 158

STATE	FED. AID PROJ. NO.	SHEET NO.	TOTAL SHEETS
MA	-	140	225
PROJECT FILE NO.	608930		

DEMOLITION DETAILS

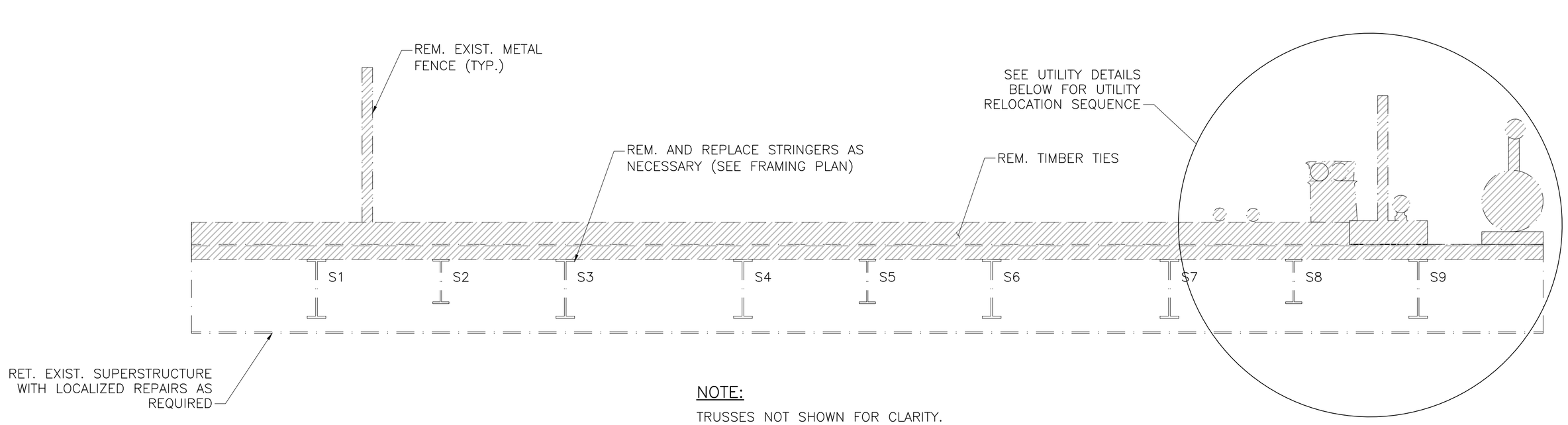

NOTE:

TRUSSES NOT SHOWN FOR CLARITY.

DEMOLITION SECTION
SCALE: $\frac{1}{2}$" = 1'–0"

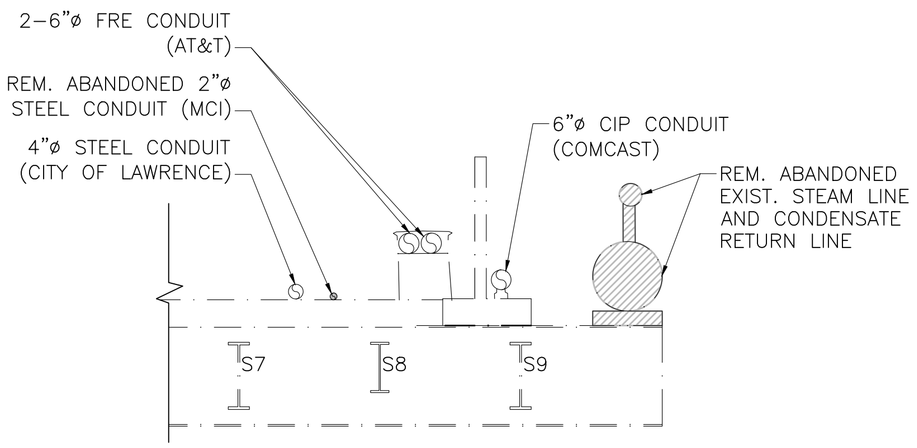

STAGE 1

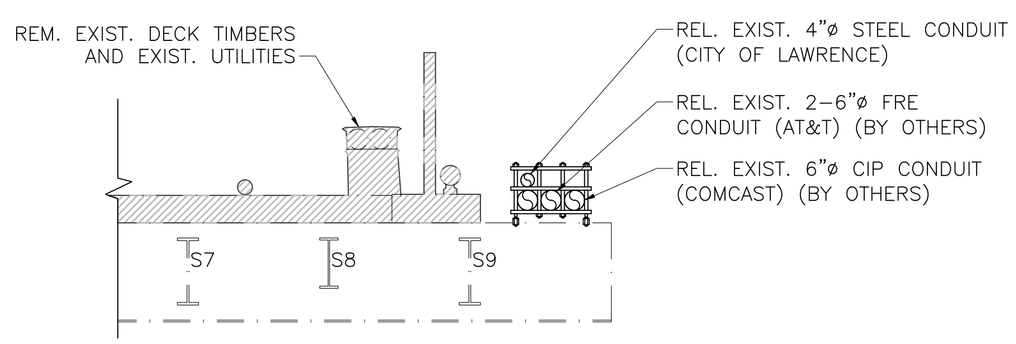

STAGE 2

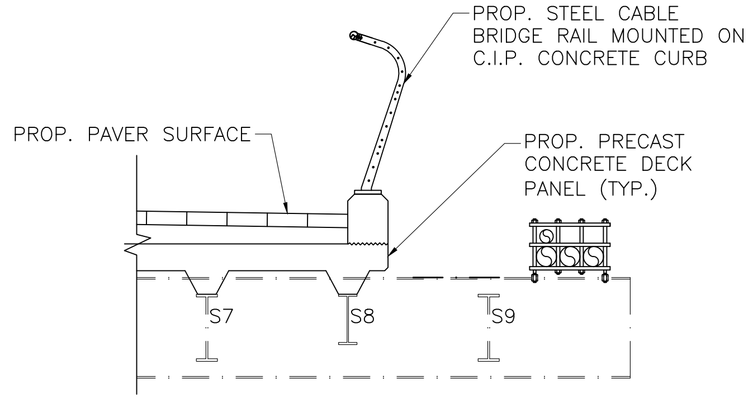

STAGE 3

UTILITY RELOCATION DETAILS

SCALE: $\frac{3}{8}$" = 1'–0"

STAGED CONSTRUCTION NOTES

STAGE 1: DEMOLISH EXISTING STEAM LINE AND CONDENSATE RETURN LINE.

STAGE 2: RELOCATE EXISTING UTILITIES, THEN REMOVE EXISTING DECK TIMBERS AND EXISTING UTILITIES

STAGE 3: CONSTRUCT PROPOSED DECK AND RAILING.

10/28/2022	FIRST STRUCTURAL SUBMITTAL
DATE	DESCRIPTION

THIS SHEET IS APPROVED FOR CONSTRUCTION BY MASSDOT
AUTHORIZED SIGNATORY: _____ STATE BRIDGE ENGINEER
USE ONLY PRINTS OF LATEST DATE

FOR PERMITTING PURPOSES - NOT FOR CONSTRUCTION

608930_BR3(L04032).DWG Plotted on 28-Oct-2022 12:22 PM
Proposal No. 608930-128034
October 28, 2022
First Structural Submittal (S1)
A00869 - 159

LAWRENCE
LMRC RAIL TRAIL OVER MERRIMACK RIVER

STATE	FED. AID PROJ. NO.	SHEET NO.	TOTAL SHEETS
MA	-	141	225
PROJECT FILE NO.	608930		

PLAN AND ELEVATION

608930_BR4(L04032).DWG Plotted on 28-Oct-2022 12:23 PM

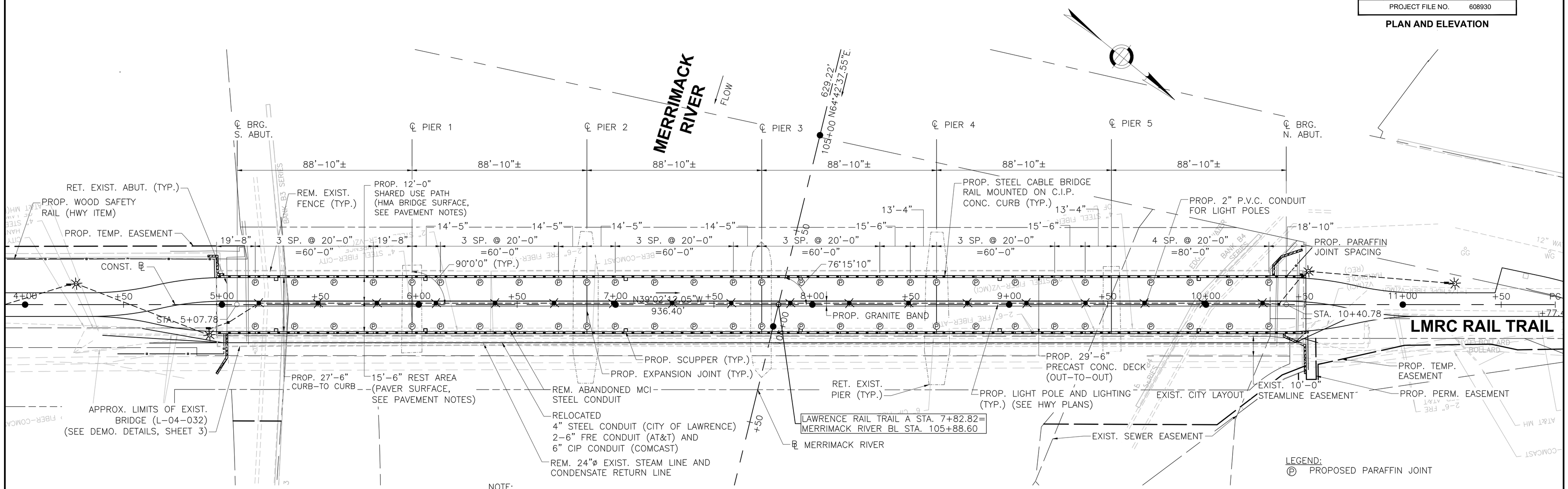

NOTE:
REFER TO SHEET 6 FOR STRINGER REPLACEMENT DETAILS.

PLAN VIEW
SCALE: ½" = 1'–0"

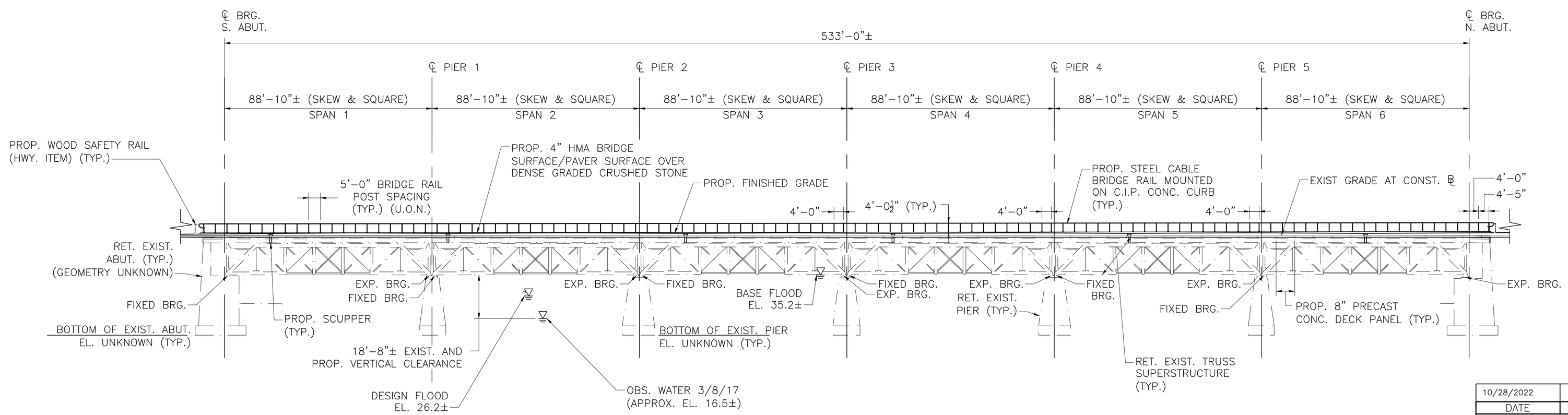

NOTE:
ALL EXISTING TRUSS BEARINGS WILL REMAIN IN PLACE AND UNDISTURBED.

ELEVATION VIEW (LOOKING SOUTH)
SCALE: ½" = 1'–0"

10/28/2022	FIRST STRUCTURAL SUBMITTAL
DATE	DESCRIPTION

THIS SHEET IS APPROVED FOR CONSTRUCTION BY MASSDOT
AUTHORIZED SIGNATORY: STATE BRIDGE ENGINEER
USE ONLY PRINTS OF LATEST DATE

SHEET 4 OF 12 SHEETS BRIDGE NO. L–04–032 (C82)

Proposal No. 608930-128034
October 28, 2022
First Structural Submittal (S1)

FOR PERMITTING PURPOSES - NOT FOR CONSTRUCTION

LAWRENCE
LMRC RAIL TRAIL OVER MERRIMACK RIVER

STATE	FED. AID PROJ. NO.	SHEET NO.	TOTAL SHEETS
MA	-	142	225
PROJECT FILE NO.	608930		

FRAMING PLAN

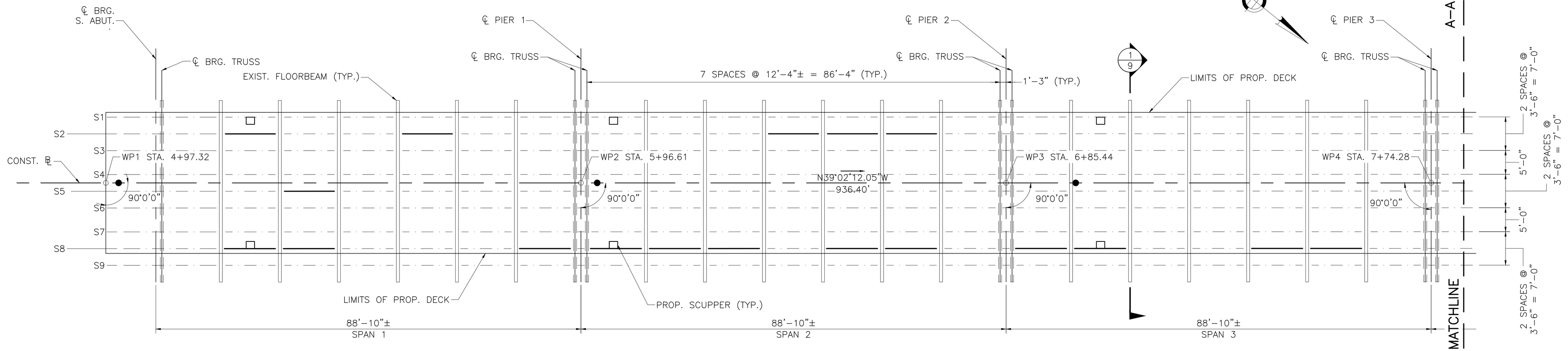

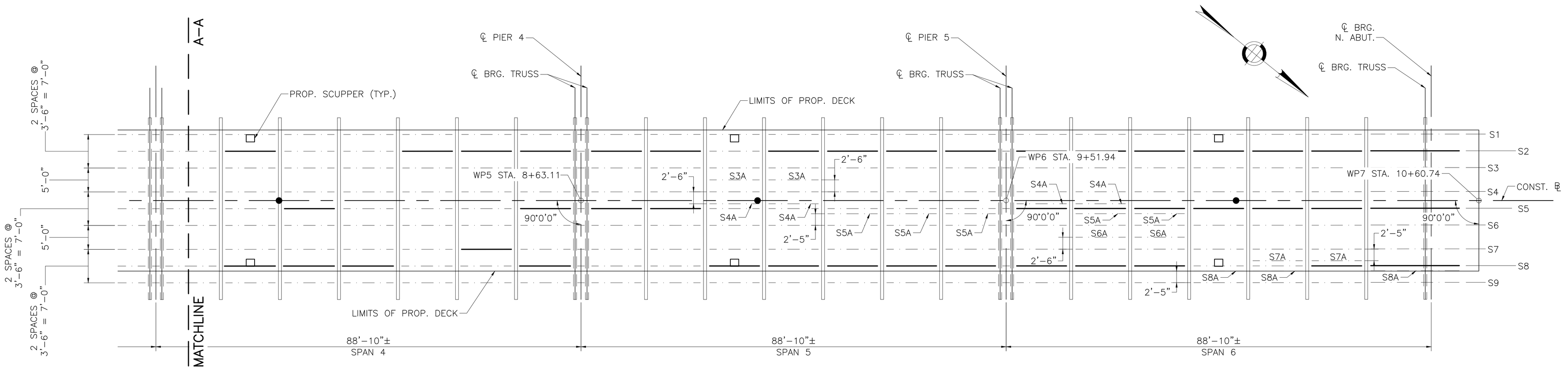

FRAMING PLAN
SCALE: 1"=10'-0"

NOTES:
1. STRINGER NOMENCLATURE AND REPLACEMENT LOCATIONS BASED ON THE WSP USA, INC. BRIDGE INSPECTION REPORT (DATED MAY 2020) AND FUTURE FOLLOW UP INSPECTIONS PRIOR TO PROJECT ADVERTISEMENT.
2. CONTRACTOR SHALL FIELD VERIFY REPLACEMENT LOCATIONS AND COORDINATE WITH ENGINEER TO DETERMINE ADDITIONAL STRINGER REPLACEMENTS AS NEEDED.
3. ALL STEEL SHALL CONFORM TO AASHTO M270 (ASTM A709) GRADE 50.
4. FOR STRINGER REPLACEMENT DETAILS, SEE SHEET 6.

LEGEND:
EXISTING STRINGER
STRINGER REPLACEMENT

10/28/2022	FIRST STRUCTURAL SUBMITTAL
DATE	DESCRIPTION

THIS SHEET IS APPROVED FOR CONSTRUCTION BY MASSDOT
AUTHORIZED SIGNATORY: STATE BRIDGE ENGINEER
USE ONLY PRINTS OF LATEST DATE

FOR PERMITTING PURPOSES - NOT FOR CONSTRUCTION

608930_BR5-6(L04032).DWG Plotted on 28-Oct-2022 12:23 PM
Proposal No. 608930-128034
October 26, 2022
First Structural Submittal (S1)

LAWRENCE
LMRC RAIL TRAIL OVER MERRIMACK RIVER

STATE	FED. AID PROJ. NO.	SHEET NO.	TOTAL SHEETS
MA	-	143	225
PROJECT FILE NO.	608930		

STRINGER REPLACEMENT DETAILS

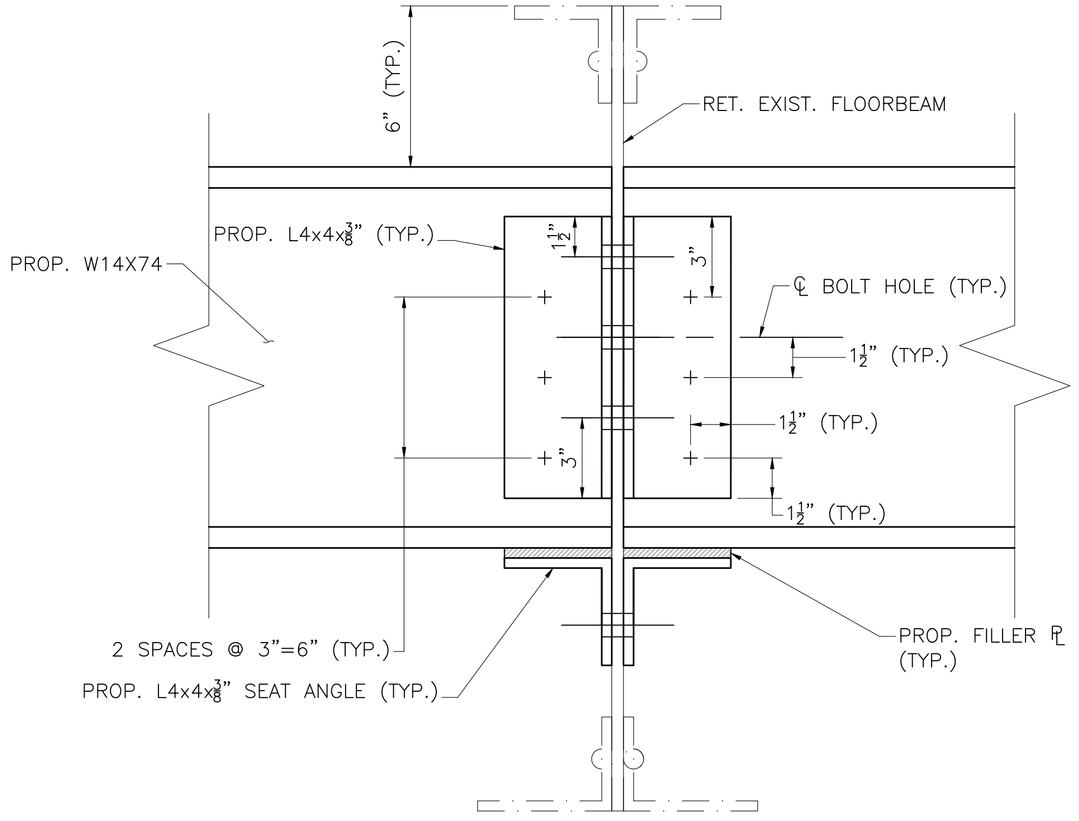

ELEVATION

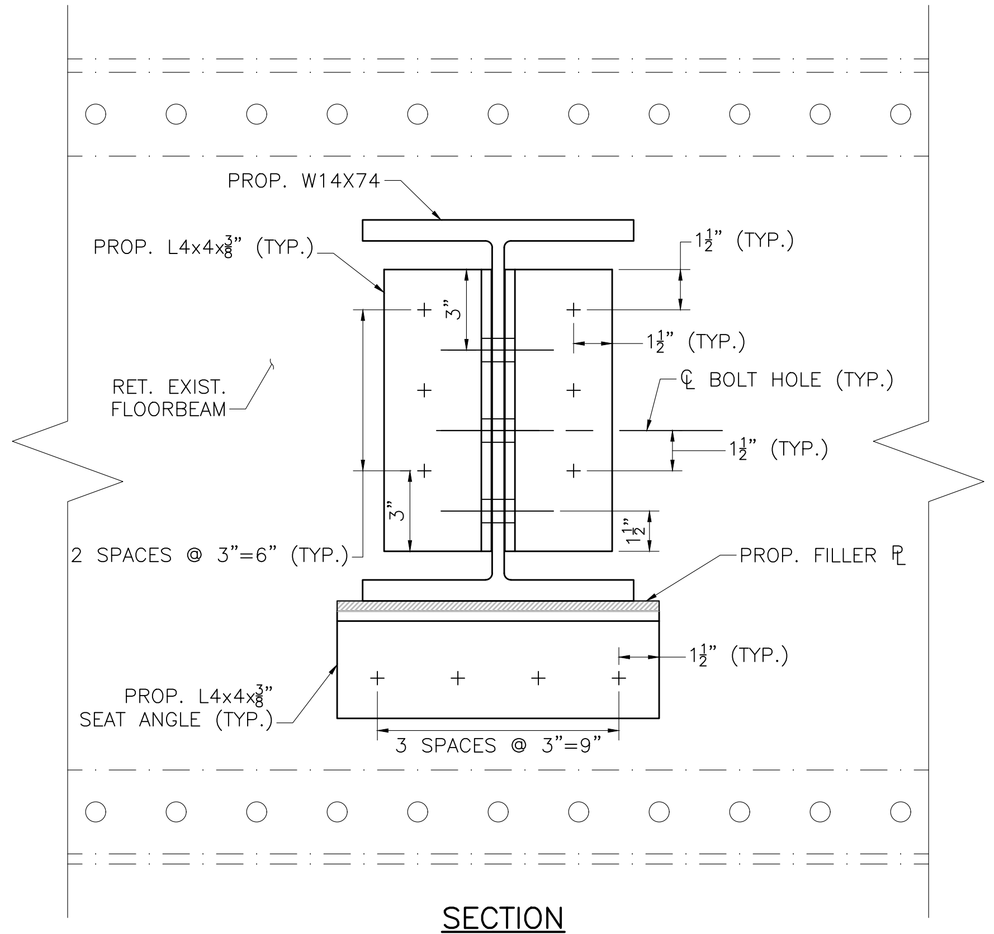

SECTION

STRINGER REPLACEMENT NOTES:

1. ANY ADJACENT STRINGERS NOT SCHEDULED FOR REPLACEMENT SHALL BE TEMPORARILY SUPPORTED DURING CONSTRUCTION.
2. CONTRACTOR SHALL VERIFY THAT EXISTING ADJACENT STRINGERS DO NOT BECOME MISALIGNED DURING STRINGER REPLACEMENT.
3. + DENOTES ⅞" ø A325 BOLT IN 15/16" ø HOLE.
4. FOR STRINGER REPLACEMENT LOCATIONS, SEE SHEET 5.

TYPICAL STRINGER REPLACEMENT

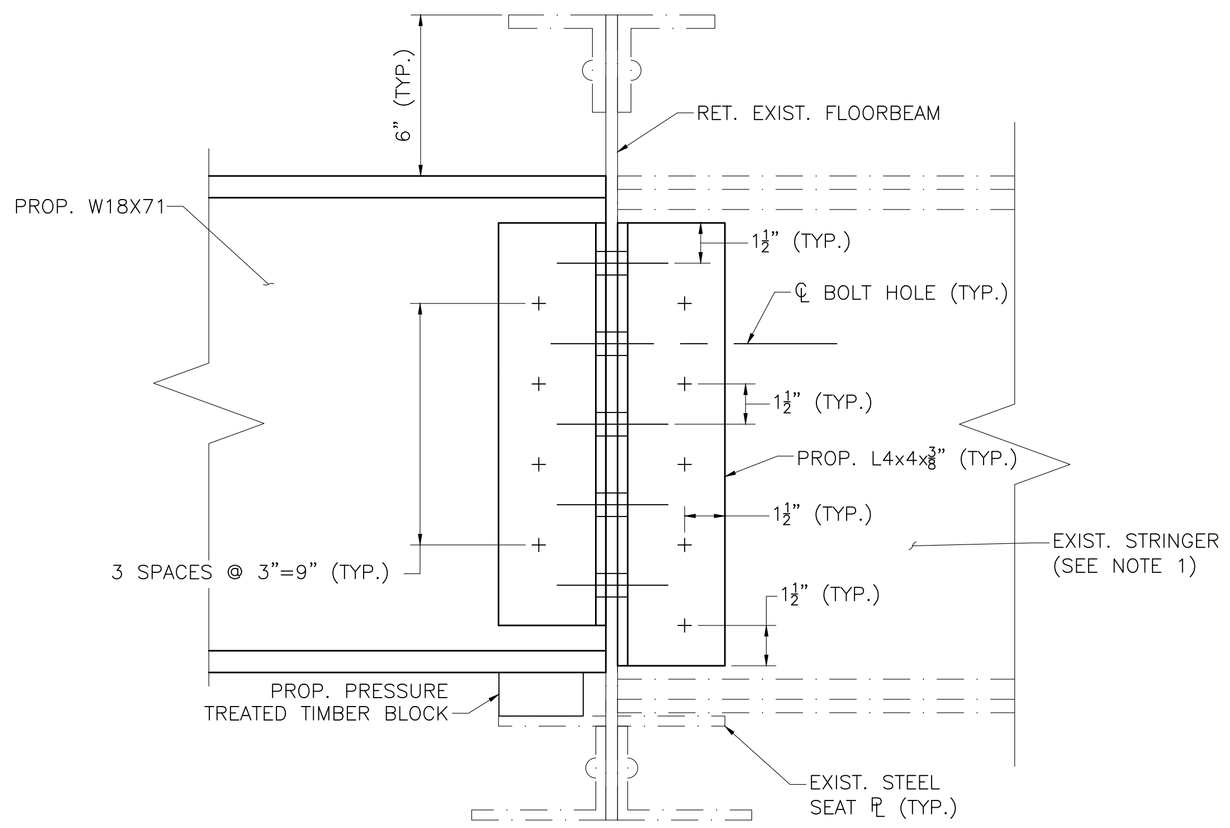

ELEVATION

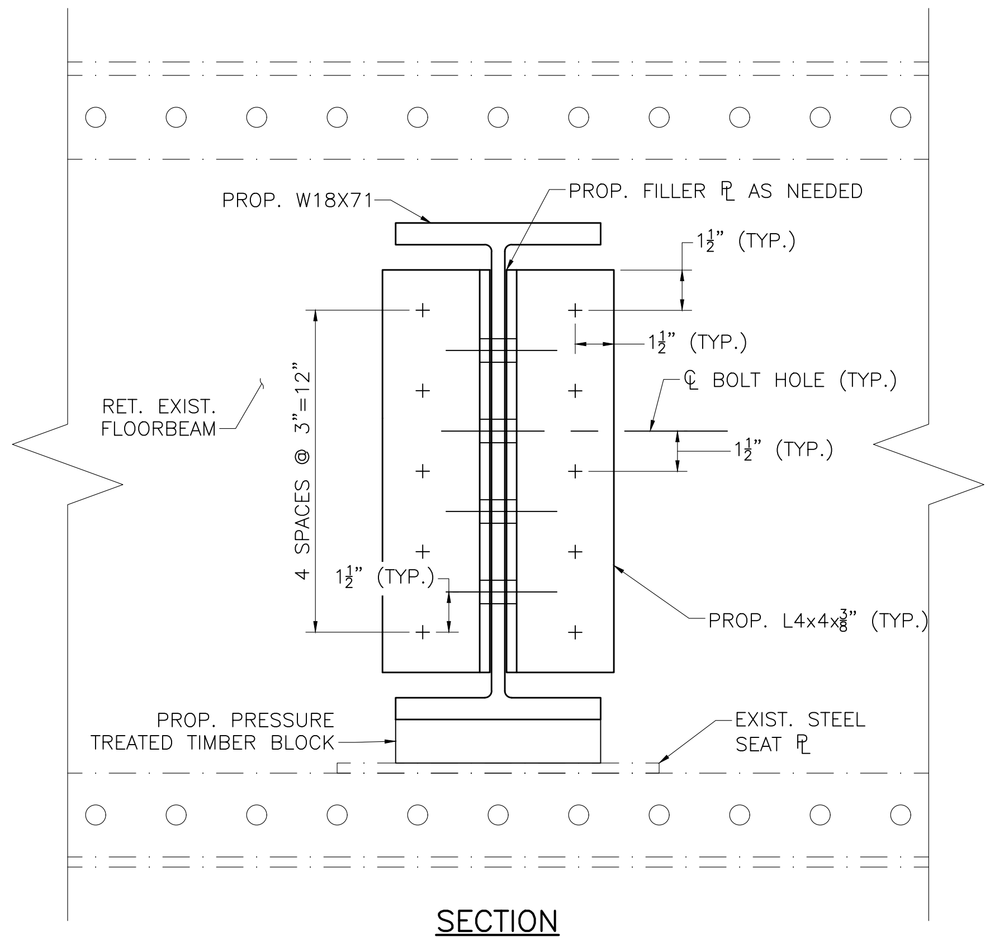

SECTION

STRINGER S7 REPLACEMENT

STRINGER REPAIR DETAILS

SCALE: 3" = 1'-0"

10/28/2022	FIRST STRUCTURAL SUBMITTAL
DATE	DESCRIPTION

THIS SHEET IS APPROVED FOR CONSTRUCTION BY MASSDOT
AUTHORIZED SIGNATORY: _____ STATE BRIDGE ENGINEER
USE ONLY PRINTS OF LATEST DATE

FOR PERMITTING PURPOSES - NOT FOR CONSTRUCTION

608930_BR5-6(L04032).DWG Plotted on 28-Oct-2022 12:23 PM
Proposal No. 608930-128034
First Structural Submittal (S1) October 26, 2022
A00869 - 162

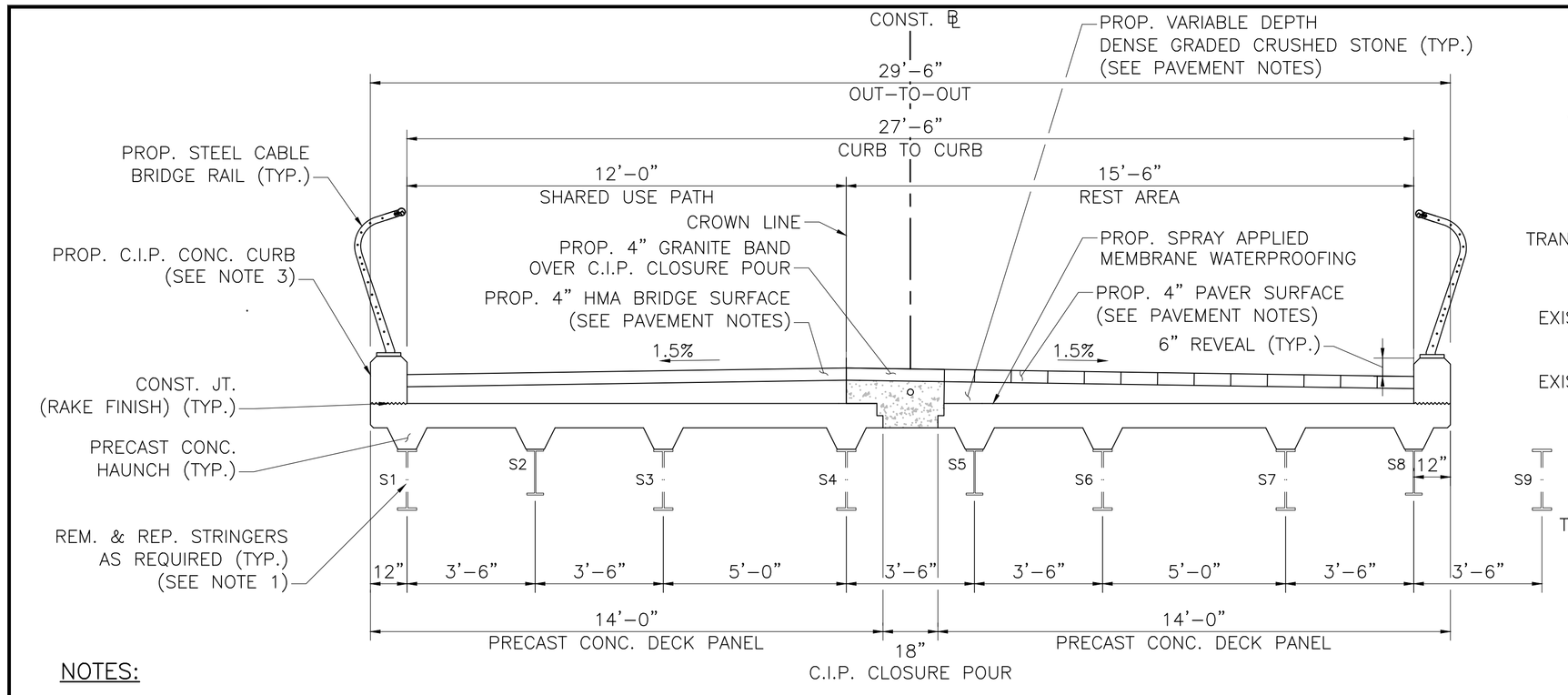

NOTES:

1. SEE FRAMING PLAN FOR STRINGER REPLACEMENT LOCATIONS AND SHEET 6 FOR STRINGER REPLACEMENT DETAILS.
2. SEE SECTION 1, SHEET 9 FOR RELOCATED UTILITY DETAILS.
3. CAST–IN–PLACE CONCRETE SAFETY CURB SHALL BE 4000 PSI, ¾", 585 HP CEMENT CONCRETE.

TYPICAL SECTION

SCALE: ⅜" = 1'–0"

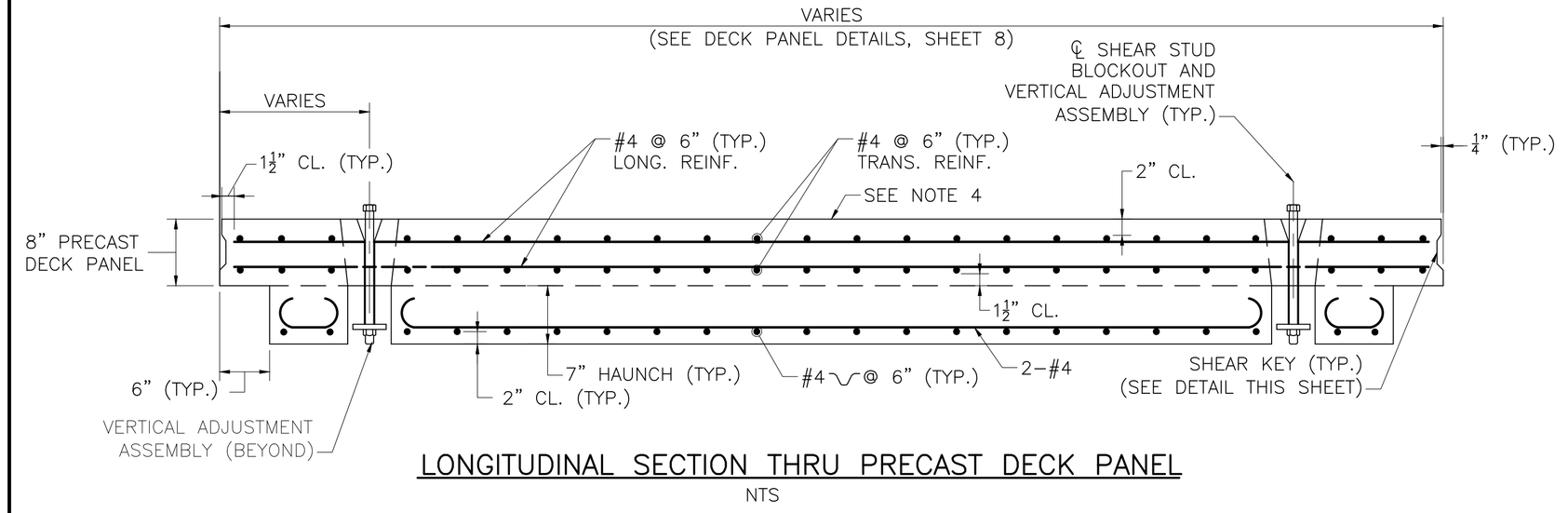

LONGITUDINAL SECTION THRU PRECAST DECK PANEL

NTS

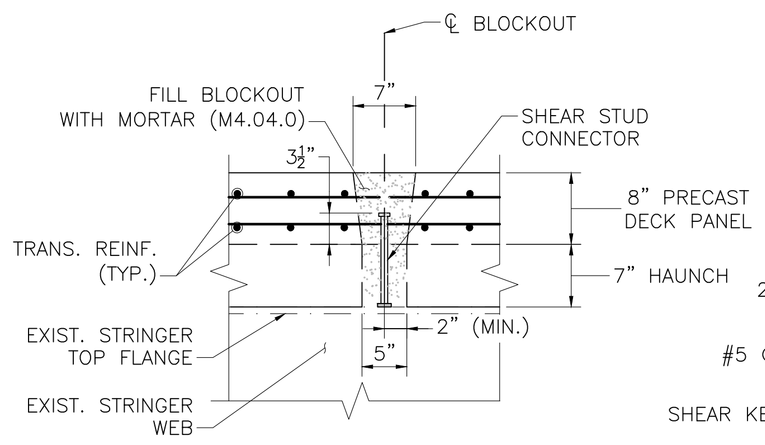

LONGITUDINAL SECTION

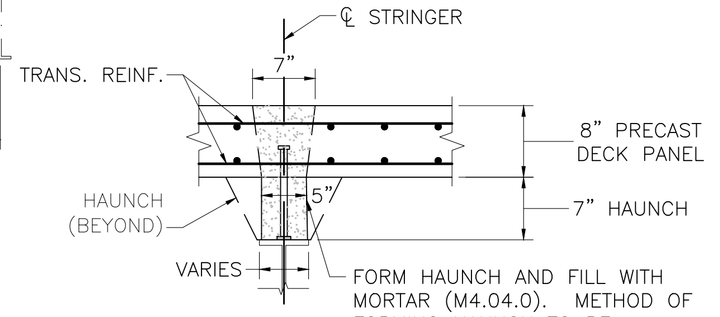

TRANSVERSE SECTION

SHEAR STUD BLOCKOUT DETAILS

SCALE: 1" = 1'–0"

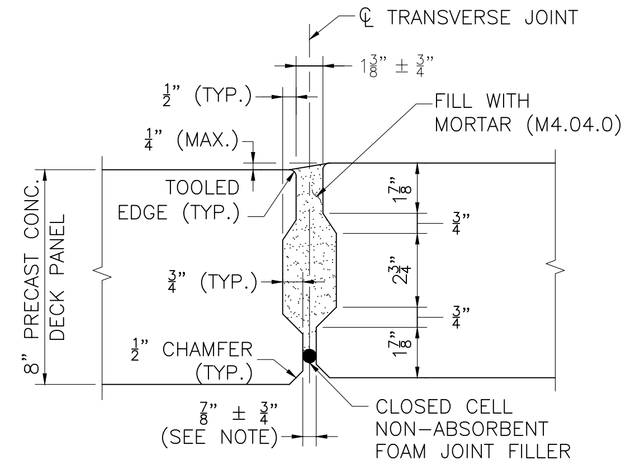

NOTE:

VARIATION IN JOINT WIDTH TO ACCOMMODATE FABRICATION TOLERANCES WHEN ERECTING PANELS.

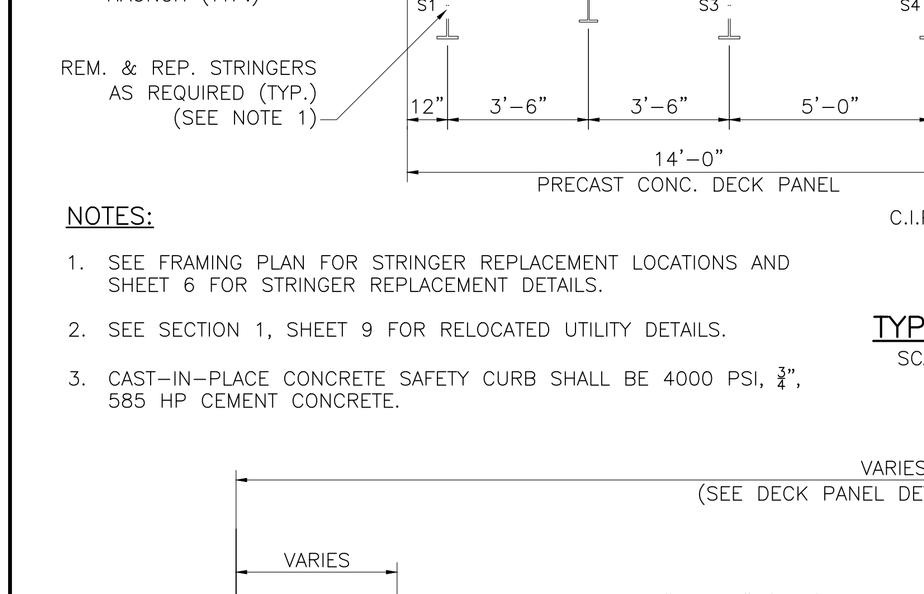

LONGITUDINAL SECTION AT FLOORBEAM

SCALE: 1" = 1'–0"

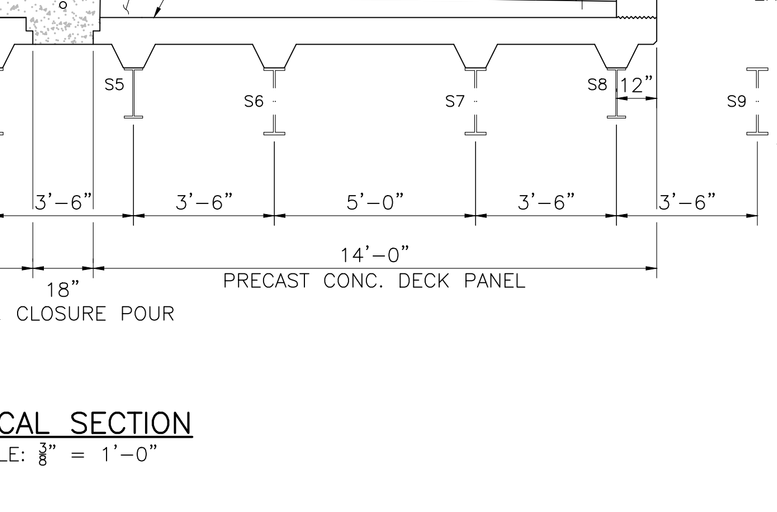

NOTE:

VERTICAL ADJUSTMENT ASSEMBLY SHALL BE DESIGNED BY THE CONTRACTOR.

VERTICAL ADJUSTMENT ASSEMBLY

SCALE: 1" = 1'–0"

SHEAR KEY DETAILS

SCALE: 3" = 1'–0"

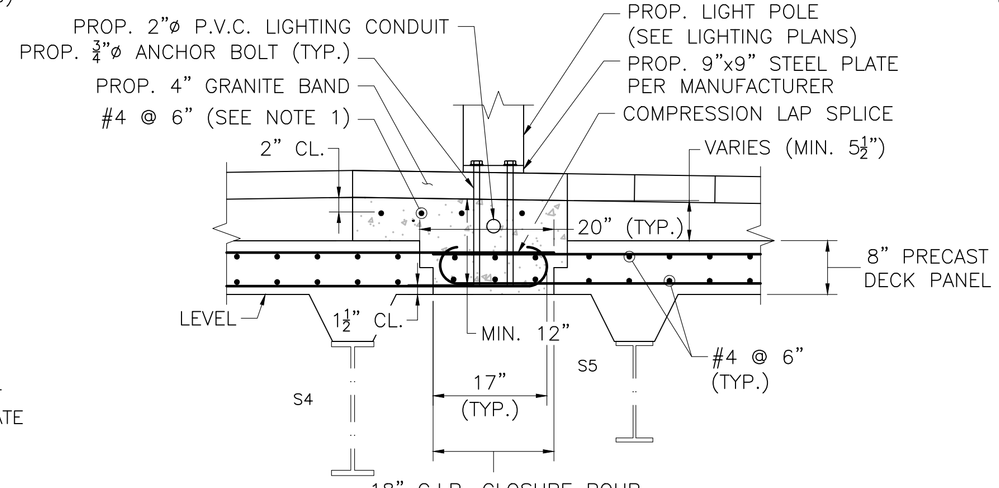

NOTE:
1. LONGITUDINAL REINFORCEMENT AT LIGHT POLE SHALL BE STAGGERED TO ALLOW ROOM FOR ANCHOR BOLTS AND CONDUIT.
2. HAUNCH REINFORCEMENT NOT SHOWN FOR CLARITY.

CAST–IN–PLACE CLOSURE POUR DETAILS

SCALE: ¾" = 1'–0"

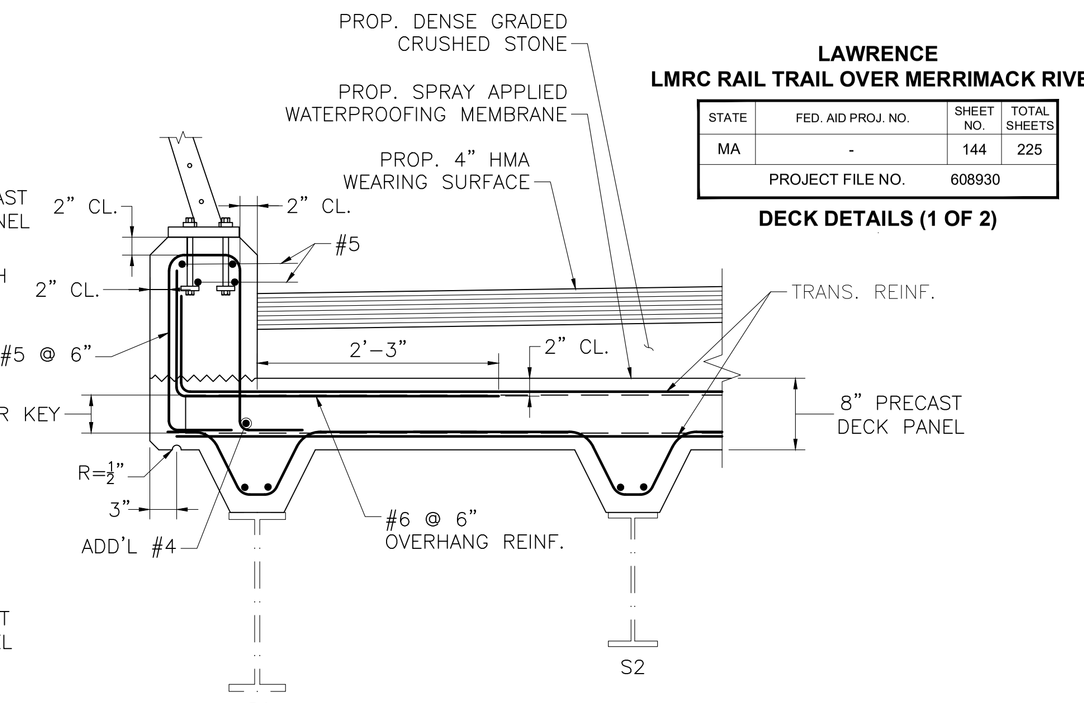

NOTE:
DECK PANEL LONGITUDINAL REINFORCEMENT NOT SHOWN FOR CLARITY.

SECTION THRU SAFETY CURB

SCALE: 1" = 1'–0"

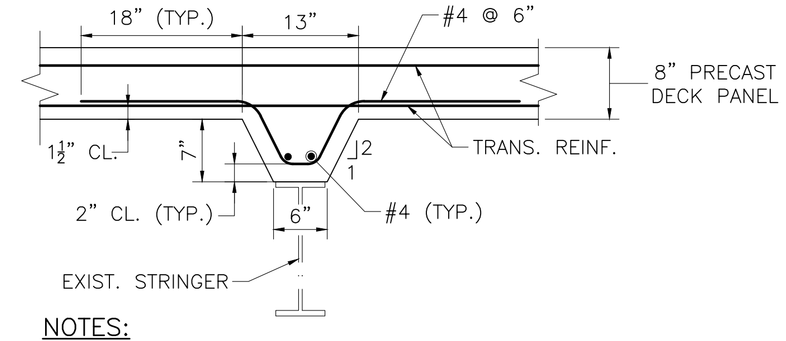

NOTES:

1. LONGITUDINAL REINFORCEMENT NOT SHOWN FOR CLARITY.
2. HAUNCH DETAIL SHOWN AT STRINGERS S2 – S7. SEE SECTION THRU SAFETY CURB DETAIL FOR HAUNCH AT STRINGERS S1 AND S8.

HAUNCH DETAIL

SCALE: 1" = 1'–0"

PAVEMENT NOTES:

HMA BRIDGE SURFACE

SURFACE: 1½" SUPERPAVE BRIDGE SURFACE COURSE (SSC–B–9.5) OVER
2½" SUPERPAVE BRIDGE PROTECTIVE COURSE (SPC–B–9.5) OVER

BASE: VARIABLE DEPTH DENSE GRADED CRUSHED STONE (VARIES BETWEEN APPROX. 2"–10")

PAVER SURFACE

SURFACE: 4" STONE PAVERS (SEE HIGHWAY PLANS FOR DETAILS)

BASE: VARIABLE DEPTH DENSE GRADED CRUSHED STONE (VARIES BETWEEN APPROX. 2"–10")

PRECAST DECK PANEL NOTES:

1. PRECAST CONCRETE DECK PANELS SHALL BE 4000 PSI, ¾ IN, 585 HP CEMENT CONCRETE. SUBSTITUTIONS OF OTHER MIX DESIGNS WILL NOT BE ALLOWED.
2. LONGITUDINAL REINFORCEMENT SHALL BE PLACED PARALLEL TO THE ℄ OF CONSTRUCTION. TRANSVERSE (PRIMARY) REINFORCEMENT SHALL BE PLACED PERPENDICULAR TO THE ℄ OF CONSTRUCTION.
3. ALL REINFORCEMENT AND SUPPORT DEVICES SHALL BE EPOXY COATED.
4. THE FINISHED SURFACE OF BRIDGE DECK SHALL BE SMOOTH AND WITHOUT ANY PROJECTIONS THAT COULD PUNCTURE THE MEMBRANE WATERPROOFING OR DEPRESSIONS THAT COULD RETAIN WATER.

LAWRENCE
LMRC RAIL TRAIL OVER MERRIMACK RIVER

STATE	FED. AID PROJ. NO.	SHEET NO.	TOTAL SHEETS
MA	-	144	225
PROJECT FILE NO.	608930		

DECK DETAILS (1 OF 2)

10/28/2022	FIRST STRUCTURAL SUBMITTAL
DATE	DESCRIPTION

THIS SHEET IS APPROVED FOR CONSTRUCTION BY MASSDOT
AUTHORIZED SIGNATORY: _____ STATE BRIDGE ENGINEER
USE ONLY PRINTS OF LATEST DATE

SHEET 7 OF 12 SHEETS BRIDGE NO. L–04–032 (C82)

FOR PERMITTING PURPOSES - NOT FOR CONSTRUCTION

608930_BR7-8(L04032).DWG Plotted on 28-Oct-2022 12:23 PM
Proposal No. 608930-128034
First Structural Submittal (S1) October 28, 2022

608930_BR7-8(L04032).DWG Plotted on 28-Oct-2022 12:23 PM

LAWRENCE
LMRC RAIL TRAIL OVER MERRIMACK RIVER

STATE	FED. AID PROJ. NO.	SHEET NO.	TOTAL SHEETS
MA	-	145	225
PROJECT FILE NO.	608930		

DECK DETAILS (2 OF 2)

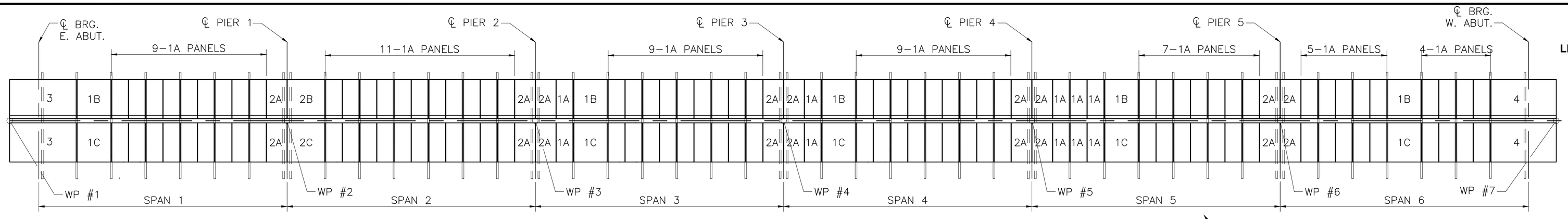

PRECAST CONCRETE DECK PANEL LAYOUT

NTS

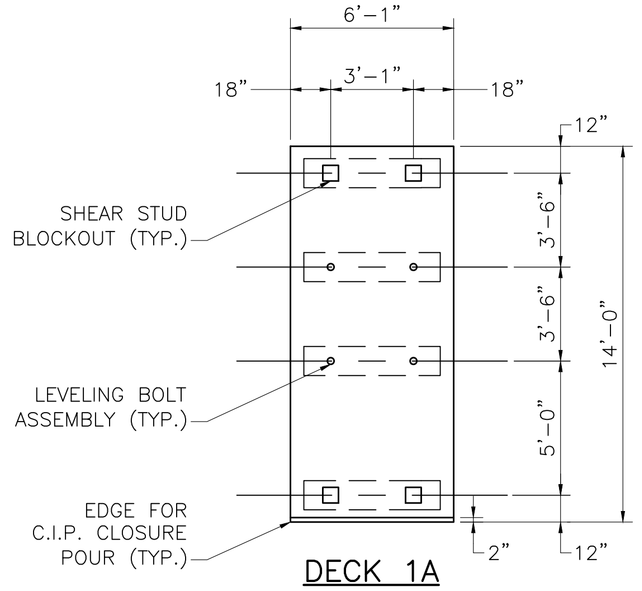

DECK 1A

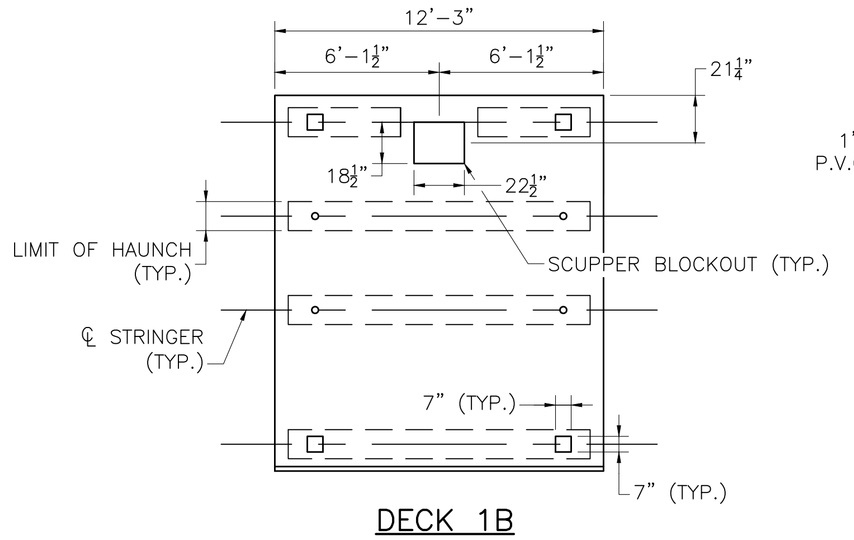

DECK 1B

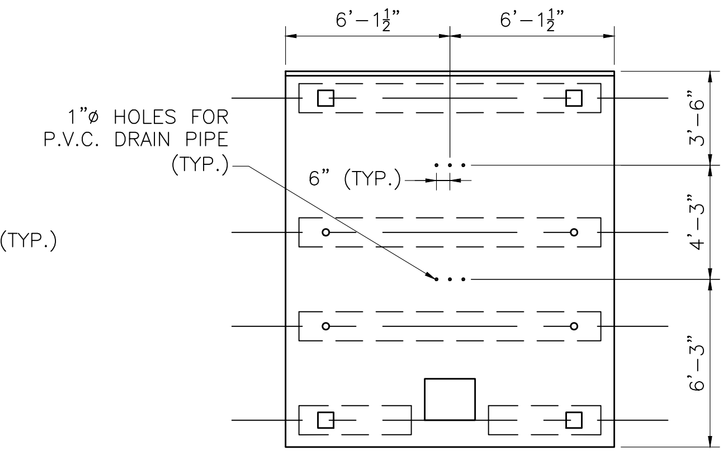

DECK 1C

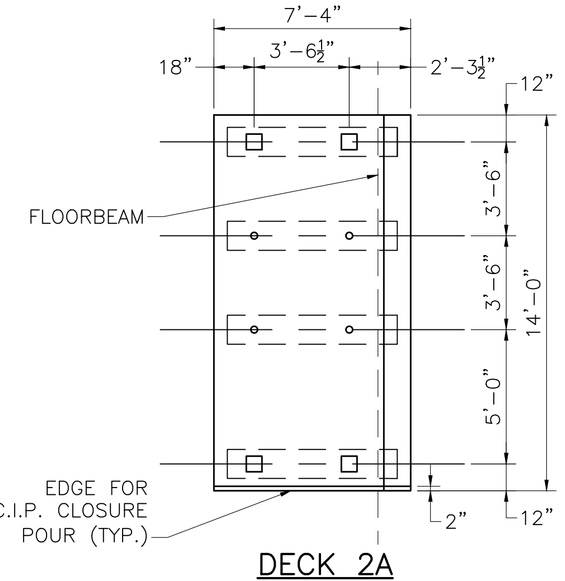

DECK 2A

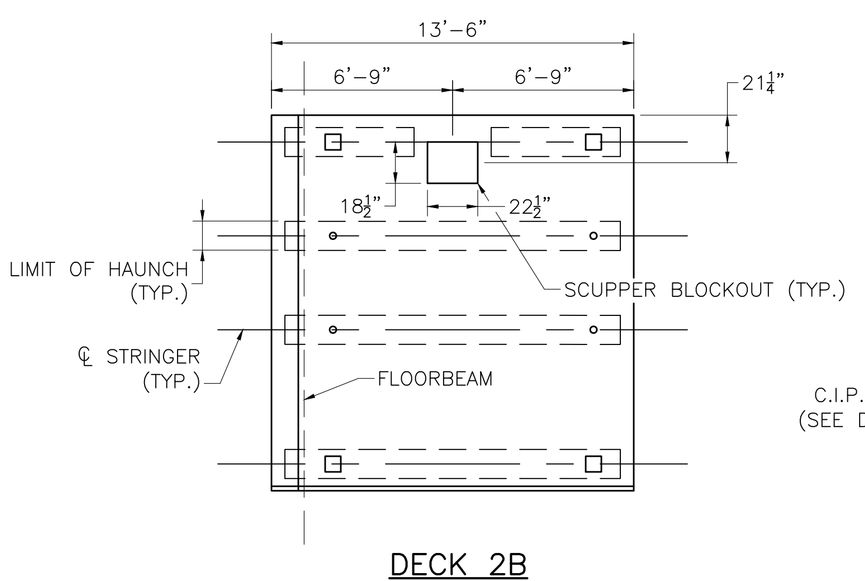

DECK 2B

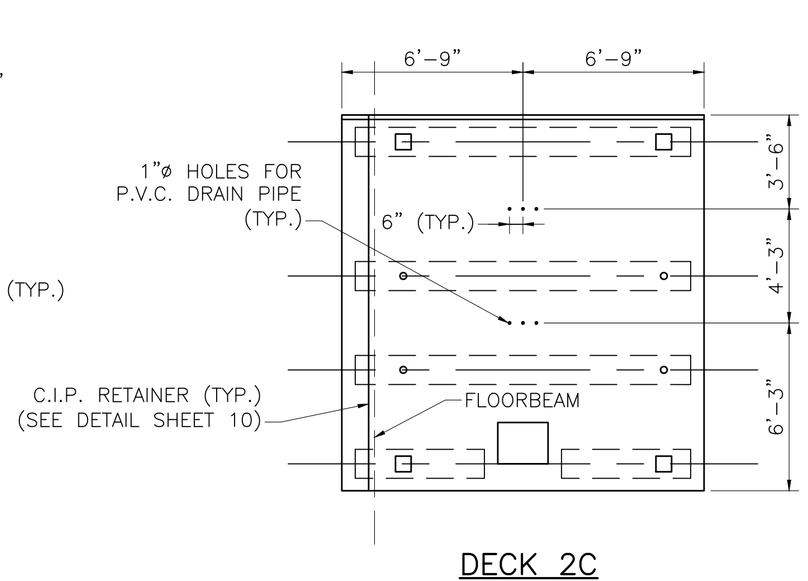

DECK 2C

PRECAST DECK PANEL SCHEDULE	
DECK	SIZE (L x W)
1A	6'–1" x 14'–0"
1B	12'–3" x 14'–0"
1C	12'–3" x 14'–0"
2A	7'–4" x 14'–0"
2B	13'–6" x 14'–0"
2C	13'–6" x 14'–0"
3	24'–0" x 14'–0"
4	23'–6" x 14'–0"

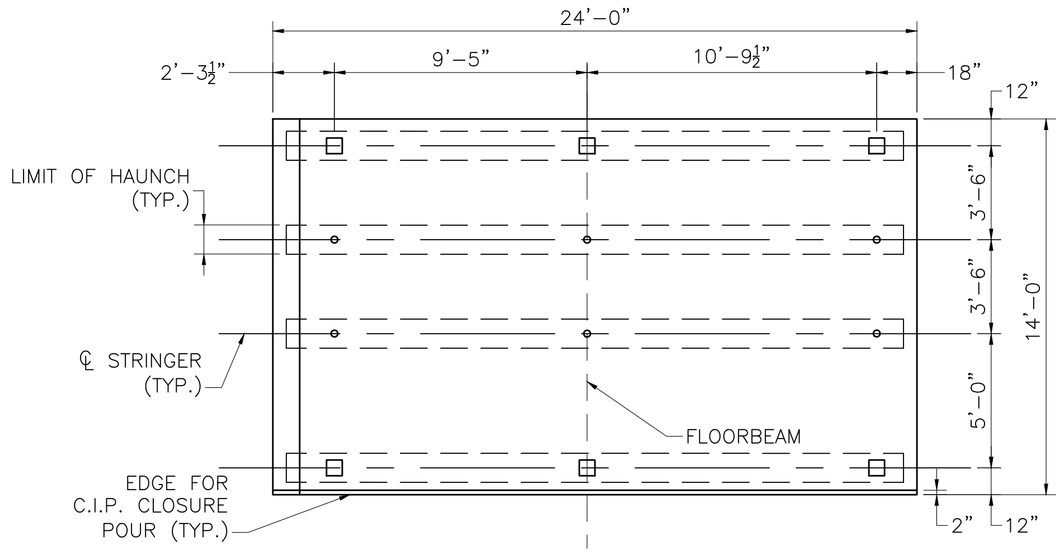

DECK 3

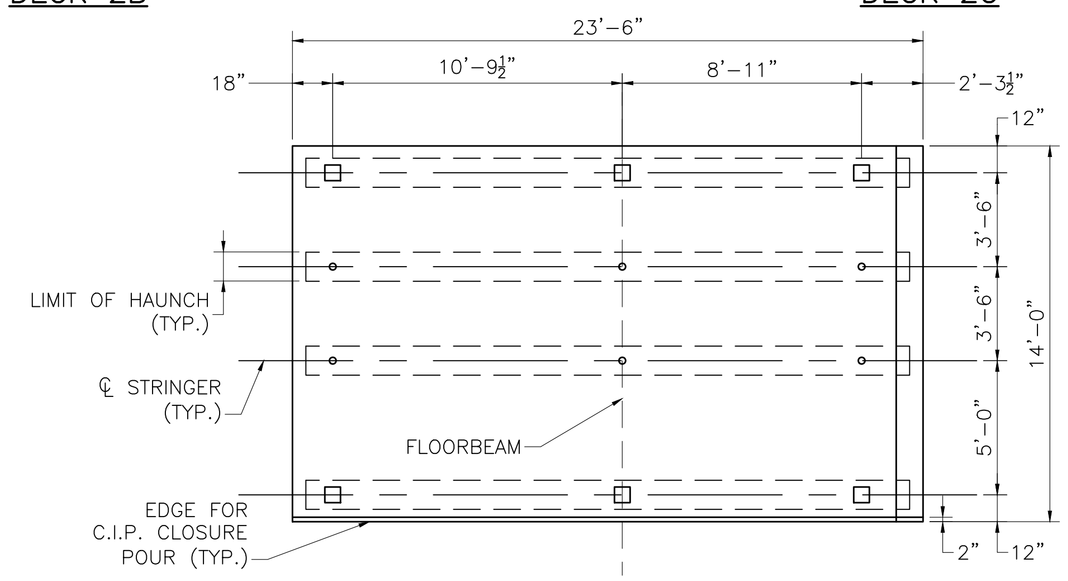

DECK 4

PRECAST DECK PANEL DETAILS

SCALE: ¼" = 1'–0"

NOTES:

1. FABRICATOR SHALL DESIGN THE LIFTING DEVICES AND SHALL DETERMINE THEIR REQUIRED NUMBER AND LOCATIONS, WHICH SHALL BE PROVIDED ON THE SHOP DRAWINGS. DESIGN CALCULATIONS OF THE LIFTING DEVICES WITH ALL SUPPORTING DESIGN INFORMATION (CHARTS, TABLES, ETC.) SHALL BE SUBMITTED TO THE ENGINEER FOR APPROVAL.
2. USE FASCIA AS WORKING LINE FOR INSTALLATION OF PRECAST CONCRETE DECK PANELS WITH THE ERECTION TOLERANCE OF ±¼".
3. DECK PANELS SHALL BE CONNECTED BY SHEAR KEYS AT FLOORBEAMS AND BY EXPANSION JOINTS AT PIERS AND ABUTMENTS. FOR EXPANSION JOINT DETAILS, SEE SHEET 10.
4. FOR C.I.P. CLOSURE POUR DETAIL, SEE SHEET 7.

10/28/2022	FIRST STRUCTURAL SUBMITTAL
DATE	DESCRIPTION

THIS SHEET IS APPROVED FOR CONSTRUCTION BY MASSDOT
AUTHORIZED SIGNATORY: STATE BRIDGE ENGINEER

USE ONLY PRINTS OF LATEST DATE

First Structural Submittal (S1) October 28, 2022

FOR PERMITTING PURPOSES - NOT FOR CONSTRUCTION

LAWRENCE
LMRC RAIL TRAIL OVER MERRIMACK RIVER

STATE	FED. AID PROJ. NO.	SHEET NO.	TOTAL SHEETS
MA	-	146	225
PROJECT FILE NO.	608930		

MISCELLANEOUS DETAILS

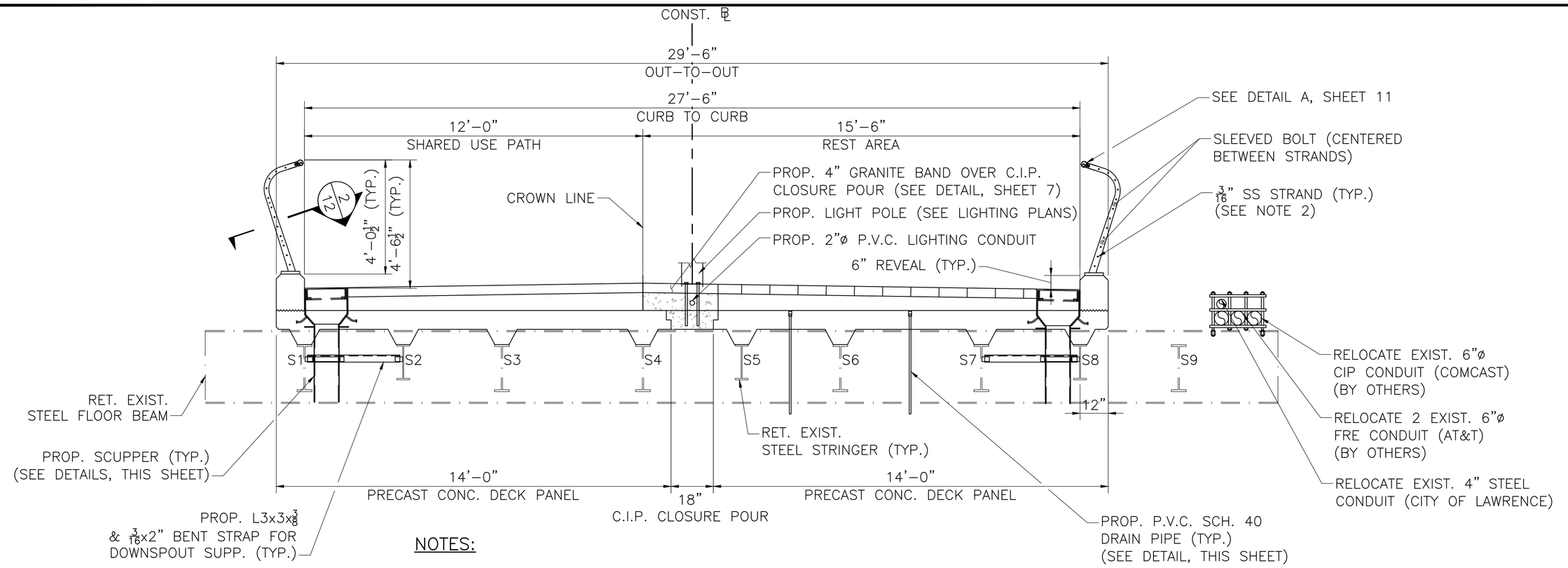

NOTES:

1. SEE SHEETS 11 & 12 FOR STEEL CABLE BRIDGE RAIL DETAILS.
2. ALL 3/16"ø SS STRANDS TO BE TYPE 316 1X19. ALL STRANDS ARE TO BE TENSIONED TO 600 POUNDS.
3. STRANDS TO BE TENSIONED USING ALL TURNBUCKLES EVENLY.
4. SEE SHEET 3 FOR UTILITY RELOCATION SEQUENCE.

SECTION 1
SCALE: 3/8" = 1'–0"

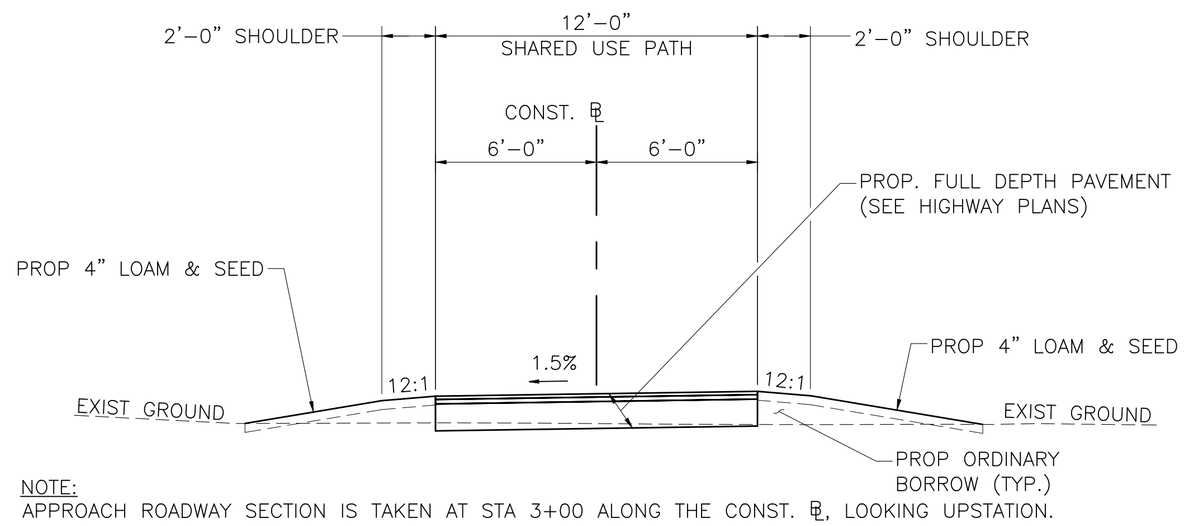

NOTE:
APPROACH ROADWAY SECTION IS TAKEN AT STA 3+00 ALONG THE CONST. ℄, LOOKING UPSTATION.

ROADWAY APPROACH SECTION
NTS

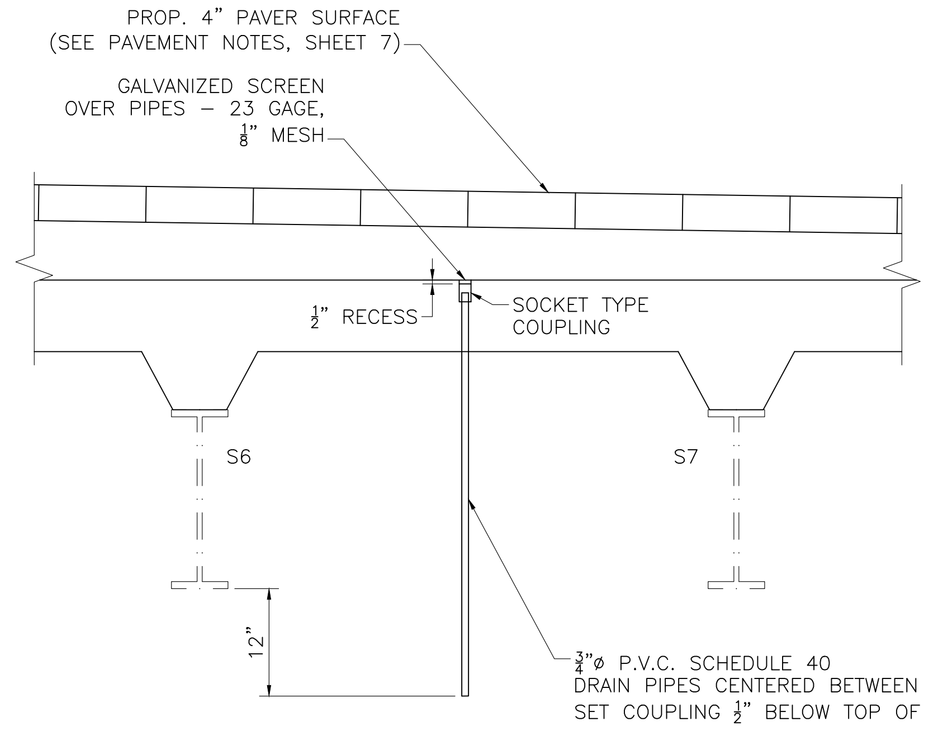

NOTE:
FOR ADD'L DRAIN PIPE DETAILS, SEE PRECAST DECK PANEL DETAILS ON SHEET 8.

DECK DRAIN PIPES
SCALE: 1" = 1'–0"

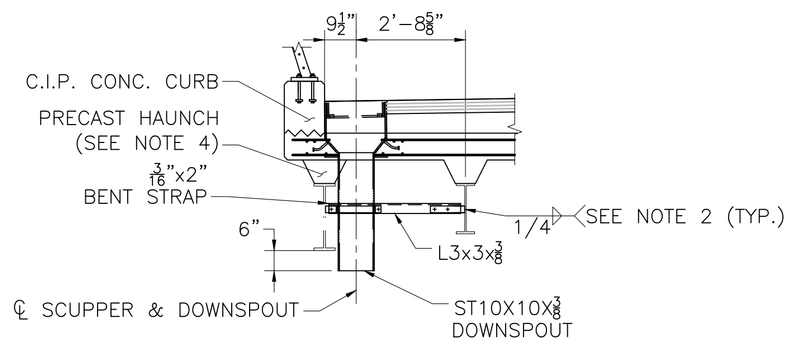

SECTION AT SAFETY CURB

NOTES:

1. ALL STEEL PLATES SHALL BE AASHTO M 270 GRADE 36 AND SQUARE TUBE SHALL BE ASTM A 500 GRADE A OR B.
2. ALL WELDS SHALL BE CONTINUOUS. ALL JOINTS SHALL BE WELDED USING TWO–SIDED 1/4" FILLET WELDS OR 1/4" PJP WELDS WITH A BACKING SEAL WELD, AS APPLICABLE.
3. ALL STEEL TO BE HOT–DIP GALVANIZED. 10" SQUARE TUBE TO BE GALVANIZED AND PAINTED TO MATCH COLOR OF THE STEEL GIRDERS.
4. PRECAST CONCRETE HAUNCH SHALL TERMINATE BEFORE LIMITS OF SCUPPER. SEE PRECAST DECK PANEL DETAILS SHEET 8.

SCUPPER SECTION
SCALE: 3/8" = 1'–0"

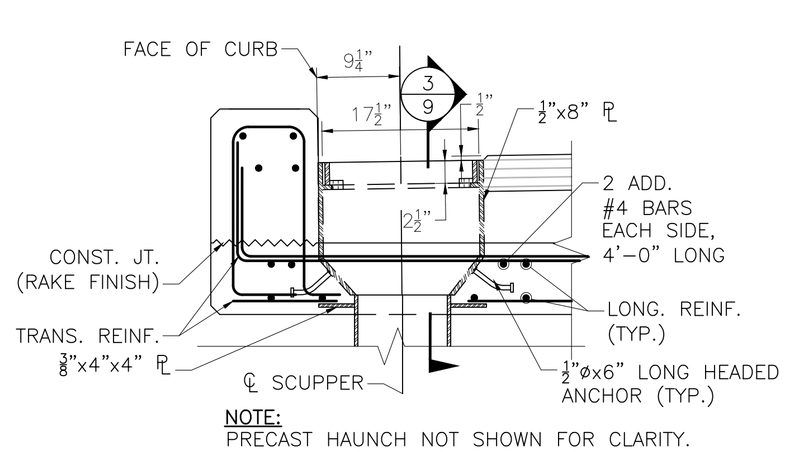

NOTE:
PRECAST HAUNCH NOT SHOWN FOR CLARITY.

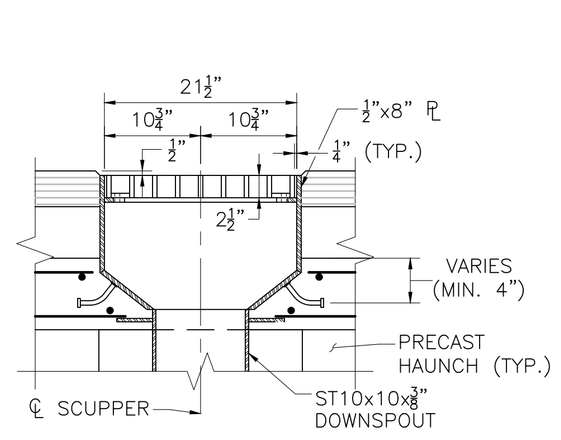

SCUPPER DETAILS
SCALE: 1" = 1'–0"

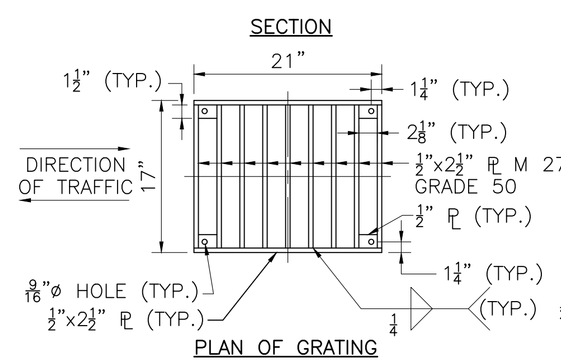

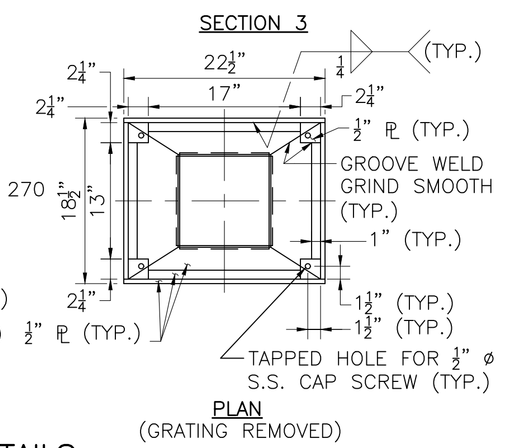

SCUPPER DETAILS
SCALE: 1" = 1'–0"

SCUPPER LOCATIONS	
STATION	OFFSET
5+27.53	13.0 LT & RT
6+03.41	13.0 LT & RT
7+05.20	13.0 LT & RT
7+94.03	13.0 LT & RT
8+95.20	13.0 LT & RT
9+96.37	13.0 LT & RT

10/28/2022	FIRST STRUCTURAL SUBMITTAL
DATE	DESCRIPTION
THIS SHEET IS APPROVED FOR CONSTRUCTION BY MASSDOT AUTHORIZED SIGNATORY:	STATE BRIDGE ENGINEER
USE ONLY PRINTS OF LATEST DATE	

FOR PERMITTING PURPOSES - NOT FOR CONSTRUCTION

608930_BR9-10(L04032).DWG Plotted on 28-Oct-2022 12:23 PM
Proposal No. 608930-128034
October 28, 2022
First Structural Submittal (S1)

STATE	FED. AID PROJ. NO.	SHEET NO.	TOTAL SHEETS
MA	-	147	225
PROJECT FILE NO.	608930		

EXPANSION JOINT DETAILS

608930_BRB-10(L04032).DWG Plotted on 28-Oct-2022 12:23 PM

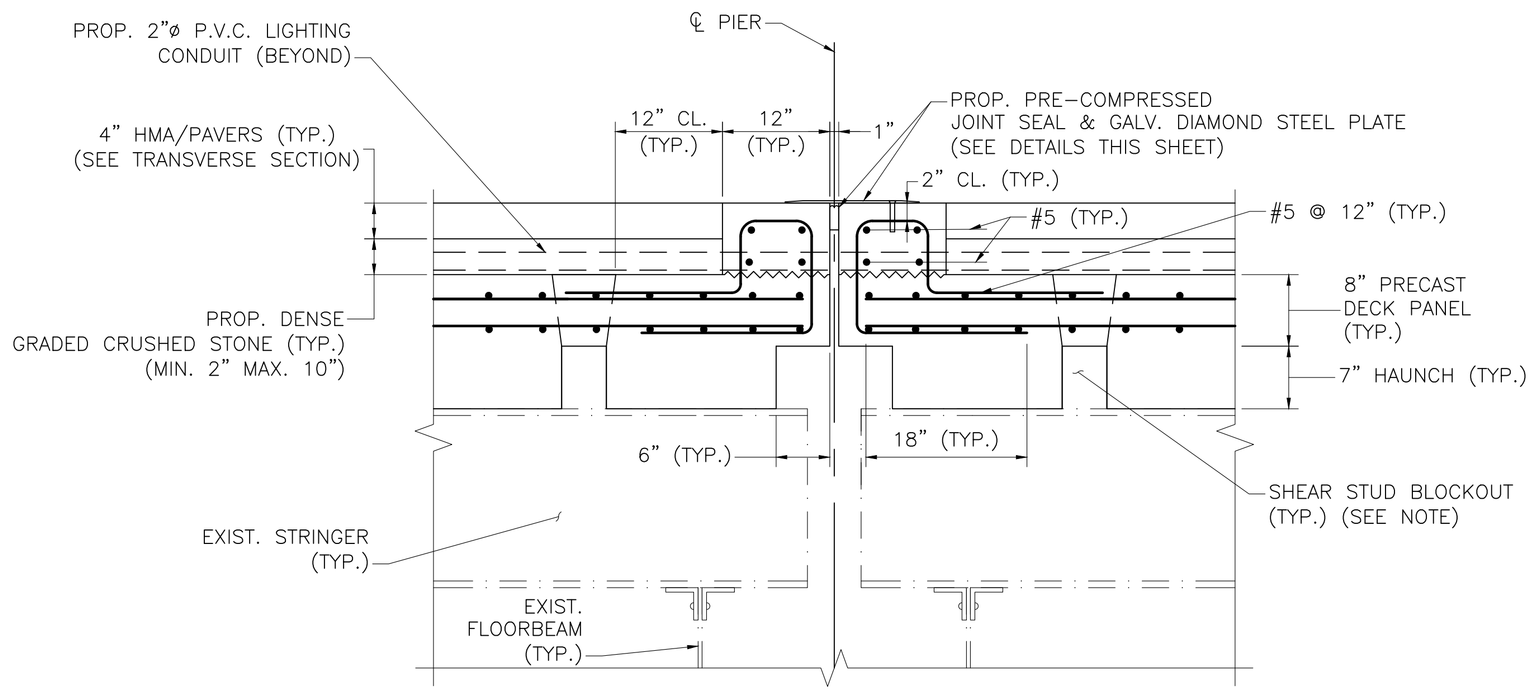

NOTE:
SHEAR CONNECTORS NOT SHOWN FOR CLARITY, SEE DETAIL SHEET 7.

LONGITUDINAL SECTION AT PIER
SCALE: 1" = 1'-0"

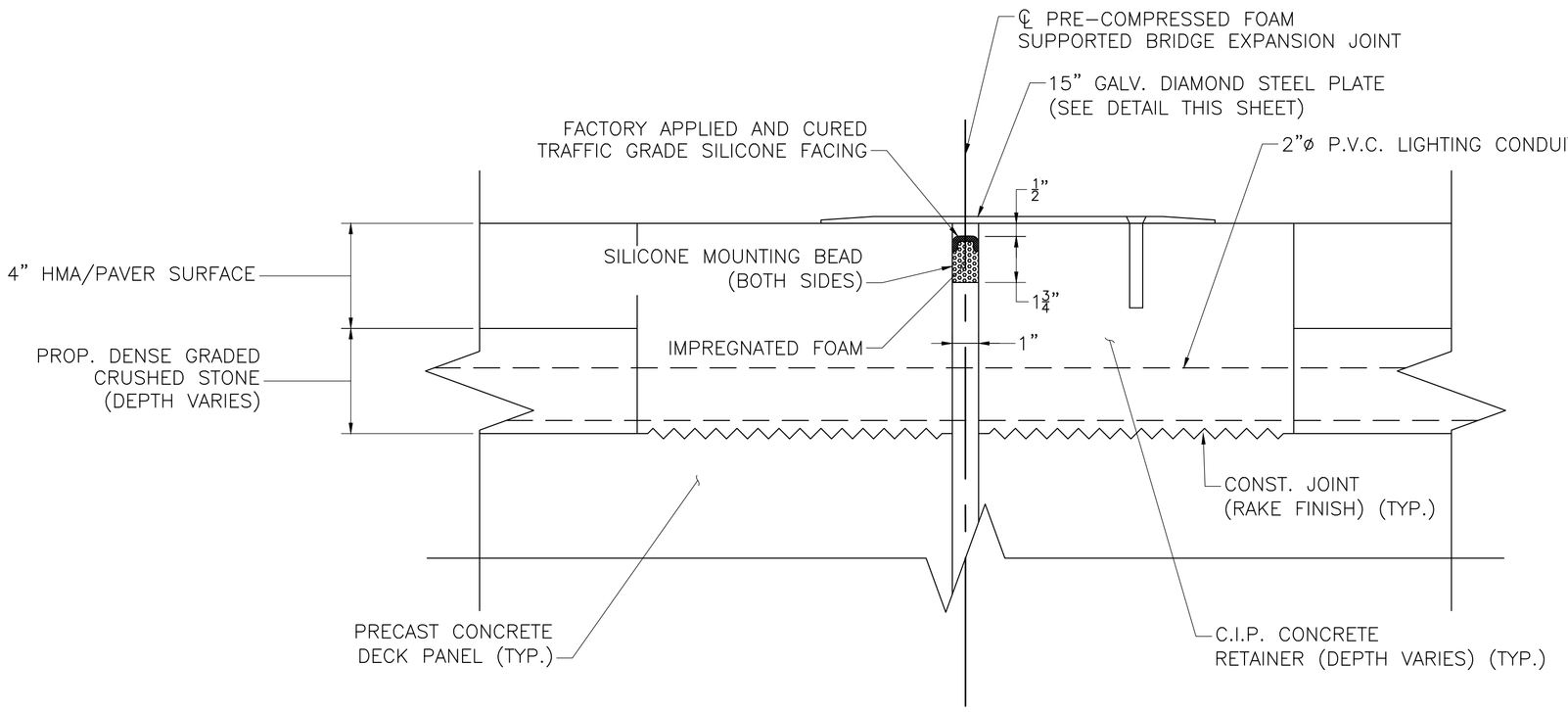

EXPANSION JOINT AT PIER
SCALE: 3"=1'-0"

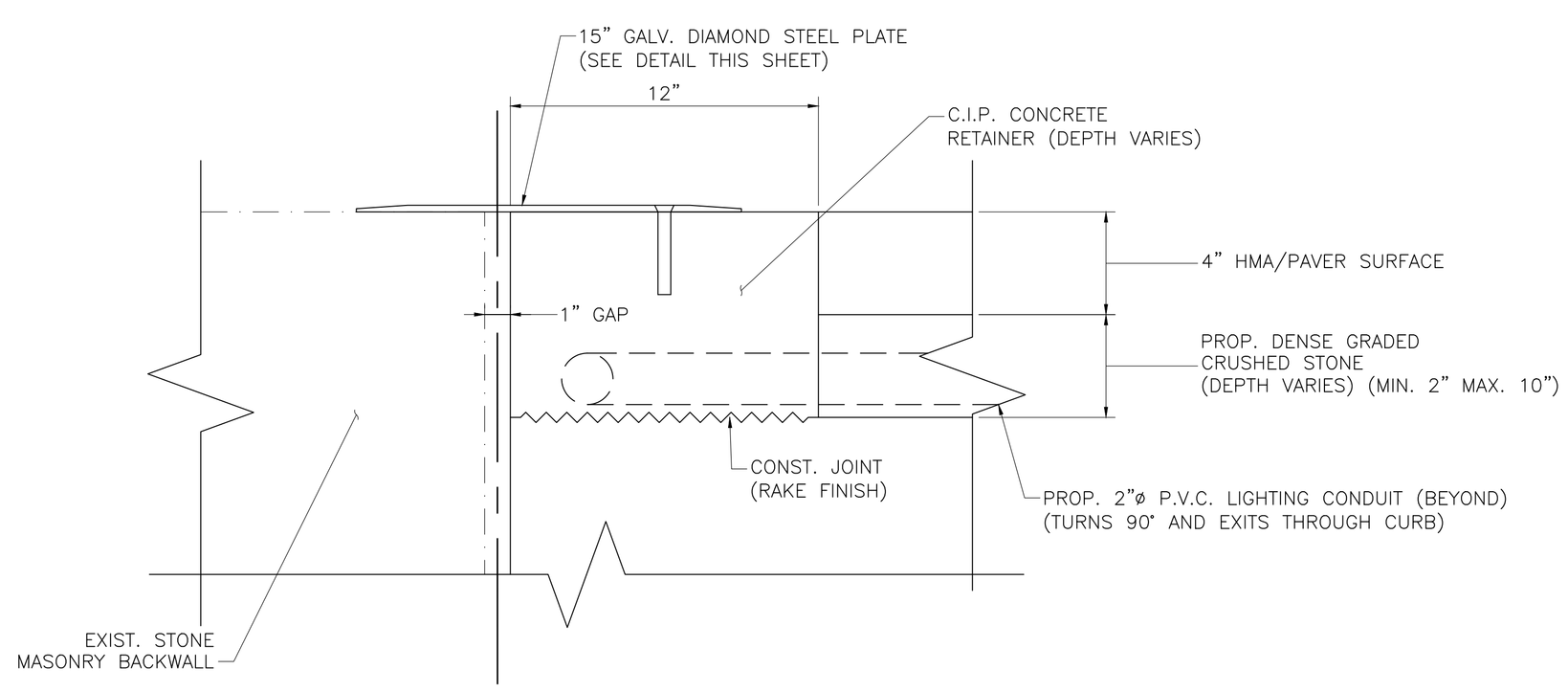

LONGITUDINAL DETAIL AT ABUTMENT
SCALE: 3"=1'-0"

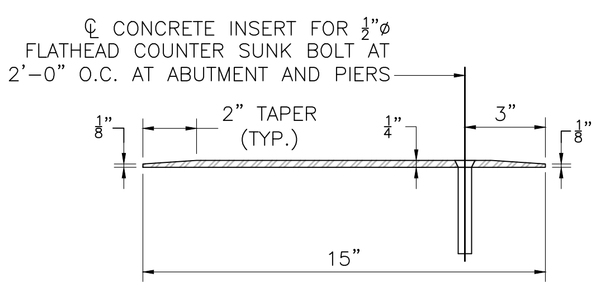

DIAMOND STEEL PLATE DETAIL
SCALE: 3"=1'-0"

10/28/2022	FIRST STRUCTURAL SUBMITTAL
DATE	DESCRIPTION

THIS SHEET IS APPROVED FOR CONSTRUCTION BY MASSDOT
AUTHORIZED SIGNATORY: _____ STATE BRIDGE ENGINEER
USE ONLY PRINTS OF LATEST DATE

FOR PERMITTING PURPOSES - NOT FOR CONSTRUCTION

First Structural Submittal (S1) October 28, 2022

Proposal No. 608930-128034

LAWRENCE
LMRC RAIL TRAIL OVER MERRIMACK RIVER

STATE	FED. AID PROJ. NO.	SHEET NO.	TOTAL SHEETS
MA	-	148	225
PROJECT FILE NO.	608930		

RAILING DETAILS (1 OF 2)

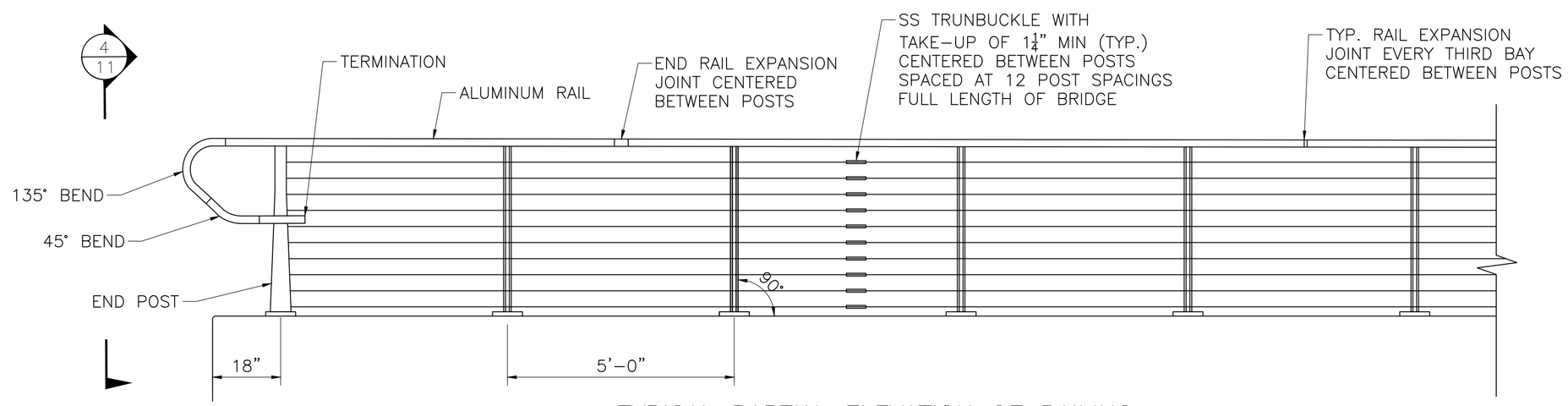

TYPICAL PARTIAL ELEVATION OF RAILING

SCALE: ½" = 1'-0"

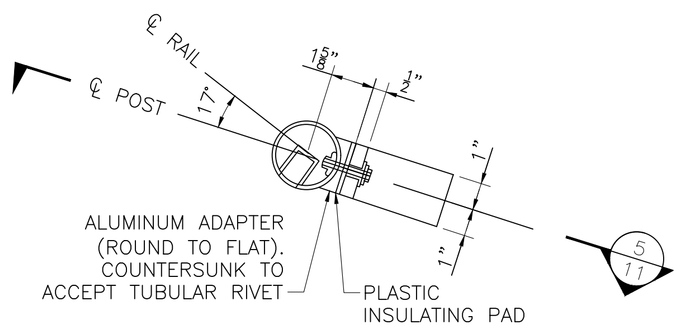

DETAIL A

SCALE: 3" = 1'-0"

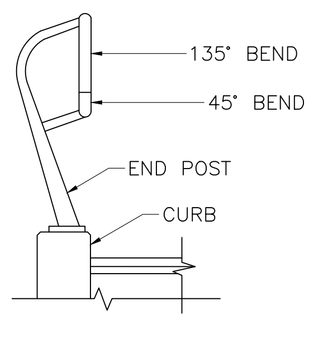

SECTION 4

SCALE: ½" = 1'-0"

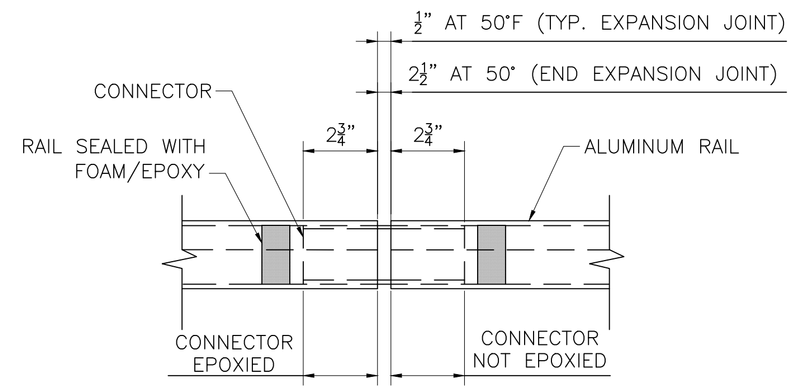

RAIL EXPANSION JOINT DETAIL

SCALE: 3" = 1'-0"

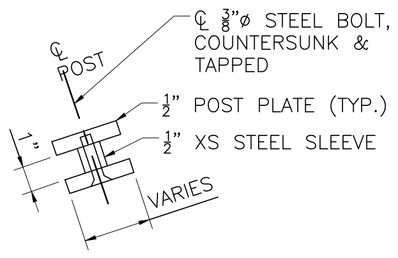

SECTION 2

SCALE: 3" = 1'-0"

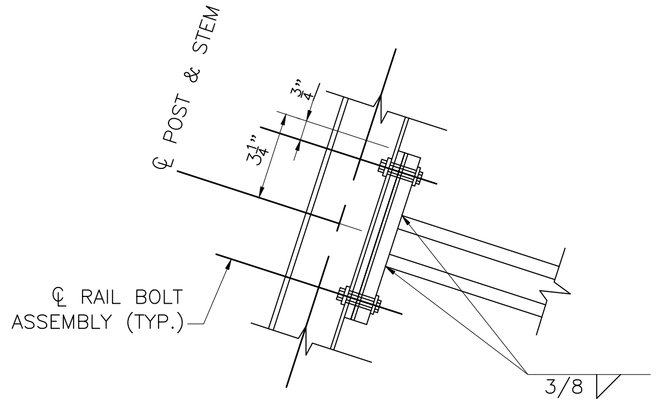

SECTION 5

SCALE: 3" = 1'-0"

RAILING ELEVATION NOTES:

1. RAIL TO BE 2½" EXTRUDED ALUMINUM GLASS RAILING TOP MOULDING.
2. SPACING SHOWN IS VALID FOR ENTIRE LENGTH OF SUPERSTRUCTURE, UNLESS OTHERWISE NOTED.
3. RAIL BOLT ASSEMBLY CONSISTS OF A ¼-20 SS BOLT, A STEEL LOCK WASHER, AN ISOLATING PLASTIC TOP HAT WASHER, AND A HEAVY DUTY ALUMINUM TUBULAR RIVET NUT.
4. ALL HOLES IN ALUMINUM RAIL TO BE DRILLED BEFORE INSTALLATION OF WIRING.
5. PROVIDE ALUMINUM END CAP AT ALL RAIL TERMINATIONS.

10/28/2022	FIRST STRUCTURAL SUBMITTAL
DATE	DESCRIPTION

THIS SHEET IS APPROVED FOR CONSTRUCTION BY MASSDOT
AUTHORIZED SIGNATORY: _____ STATE BRIDGE ENGINEER

USE ONLY PRINTS OF LATEST DATE

SHEET 11 OF 12 SHEETS BRIDGE NO. L-04-032 (C82)

FOR PERMITTING PURPOSES - NOT FOR CONSTRUCTION

608930_BR11-12(L04032).DWG Plotted on 28-Oct-2022 12:23 PM
Proposal No. 608930-128034
October 28, 2022
First Structural Submittal (S1)
A00869 - 167

LAWRENCE
LMRC RAIL TRAIL OVER MERRIMACK RIVER

STATE	FED. AID PROJ. NO.	SHEET NO.	TOTAL SHEETS
MA	-	149	225
PROJECT FILE NO.	608930		

RAILING DETAILS (2 OF 2)

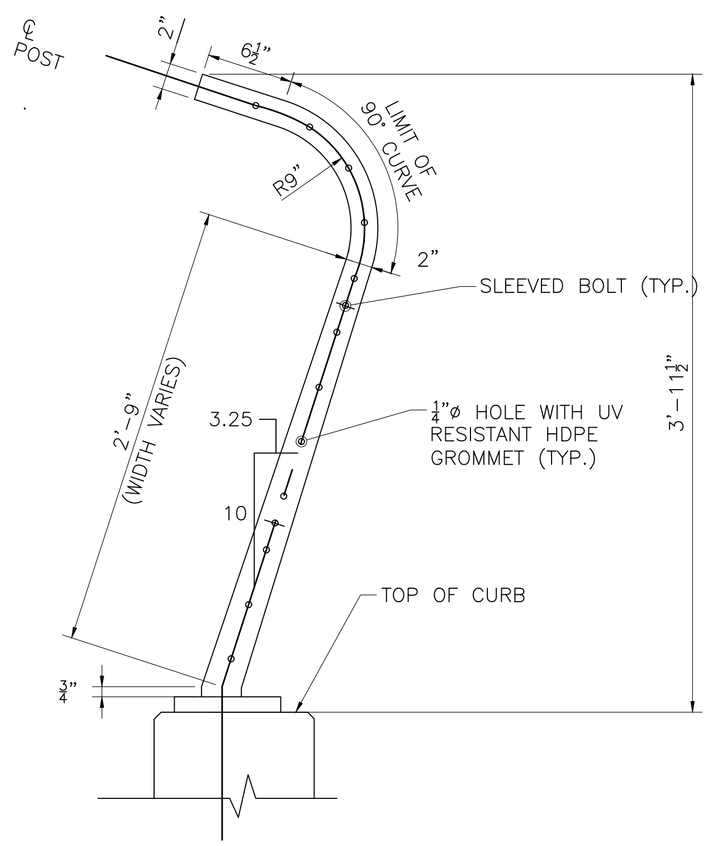

POST PLATE DIMENSIONS ON SUPERSTRUCTURE
SCALE: 1½" = 1'-0"

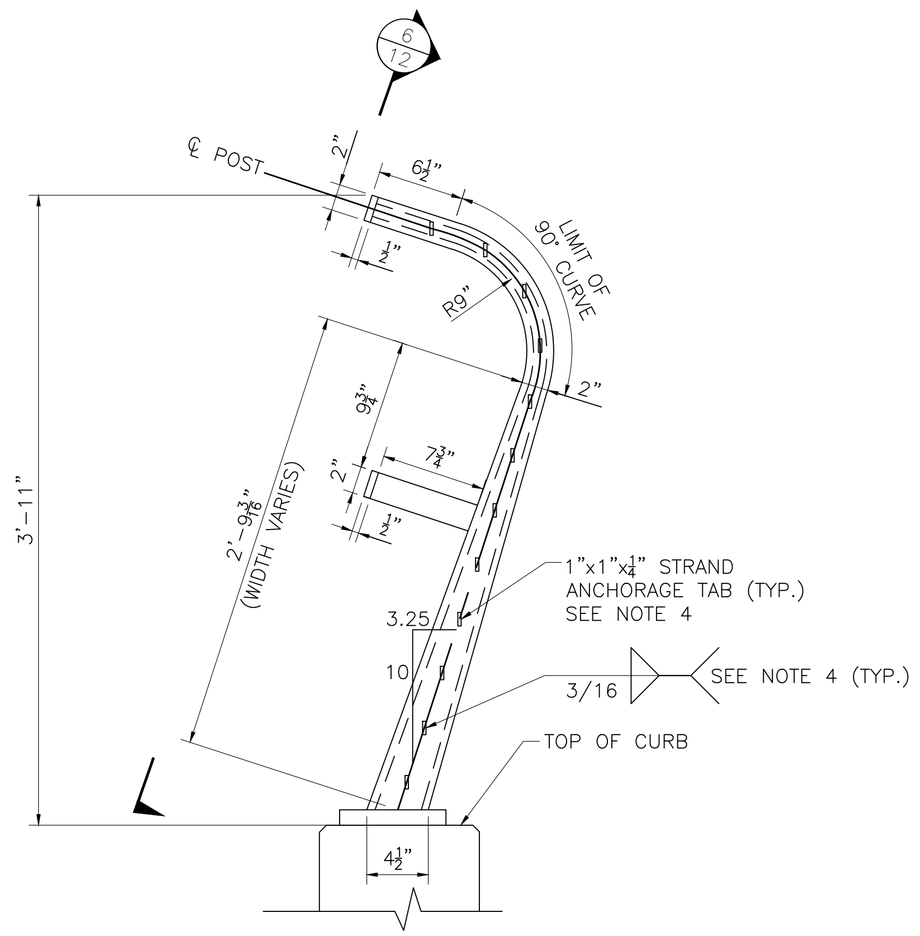

END POST DIMENSIONS
SCALE: 1½" = 1'-0"

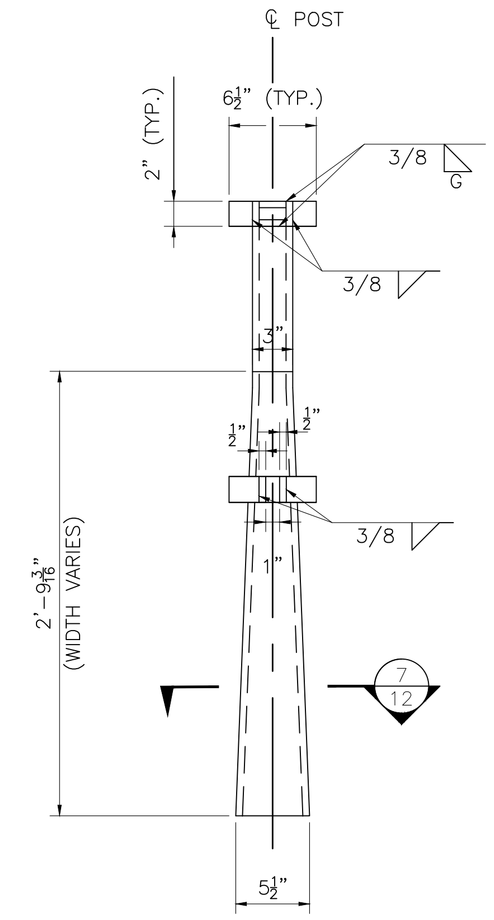

SECTION 6
SCALE: 1½" = 1'-0"

NOTES:
1. FOR STRAND SPACING, SEE SHEET 9.
2. FOR SLEEVED BOLT LOCATIONS, SEE SHEET 9.
3. STRAND ANCHORAGE TAB DATA SHOWN MAY BE ADJUSTED WITH ENGINEER'S APPROVAL IF NECESSARY TO COORDINATE WITH STRAND FITTINGS. TABS TO BE ORIENTED VERTICALLY AND SPACED WITH STRANDS. TABS TO BE PLACED ONLY ON BRIDGE SIDE OF A GIVEN ENDPOST.
4. FOR RAILING MOUNTING DETAILS, SEE SHEET 11.

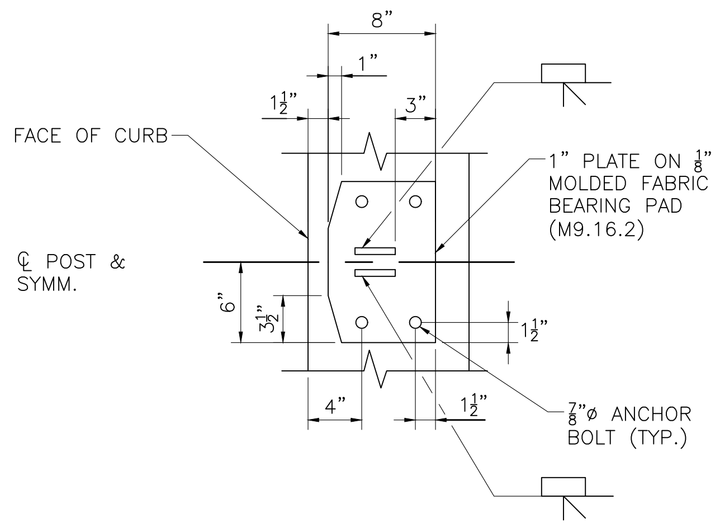

TYPICAL POST BASE PLATE PLAN
SCALE: 1½" = 1'-0"

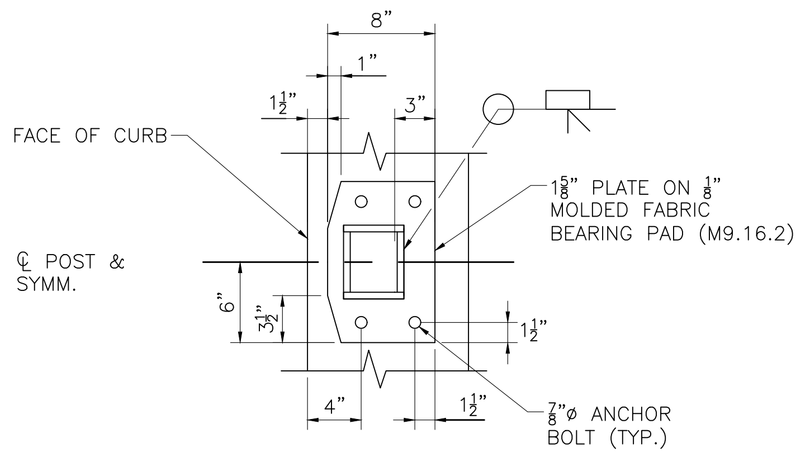

END POST BASE PLATE PLAN
SCALE: 1½" = 1'-0"

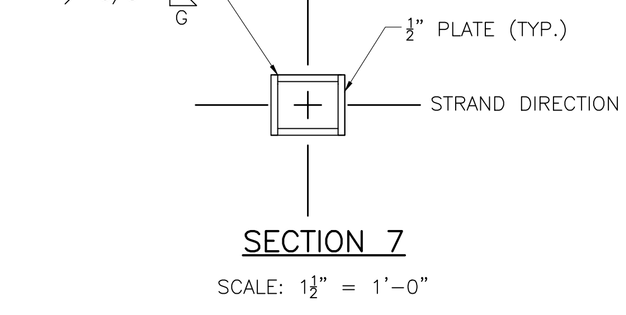

SECTION 7
SCALE: 1½" = 1'-0"

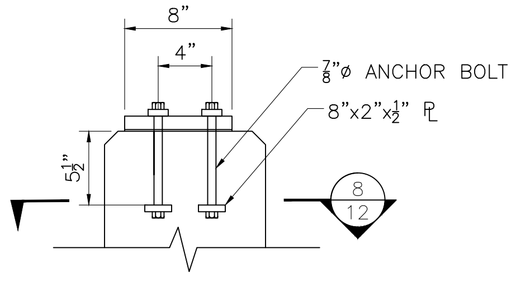

ANCHOR BOLT DETAIL
SCALE: 1½" = 1'-0"

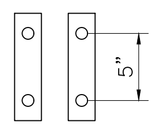

SECTION 8
SCALE: 1½" = 1'-0"

10/28/2022	FIRST STRUCTURAL SUBMITTAL
DATE	DESCRIPTION

THIS SHEET IS APPROVED FOR CONSTRUCTION BY MASSDOT
AUTHORIZED SIGNATORY: _____ STATE BRIDGE ENGINEER
USE ONLY PRINTS OF LATEST DATE

SHEET 12 OF 12 SHEETS BRIDGE NO. L-04-032 (C82)

FOR PERMITTING PURPOSES - NOT FOR CONSTRUCTION

608930_BR11-12(L04032).DWG Plotted on 28-Oct-2022 12:23 PM
Proposal No. 608930-128034
First Structural Submittal (S1) October 28, 2022

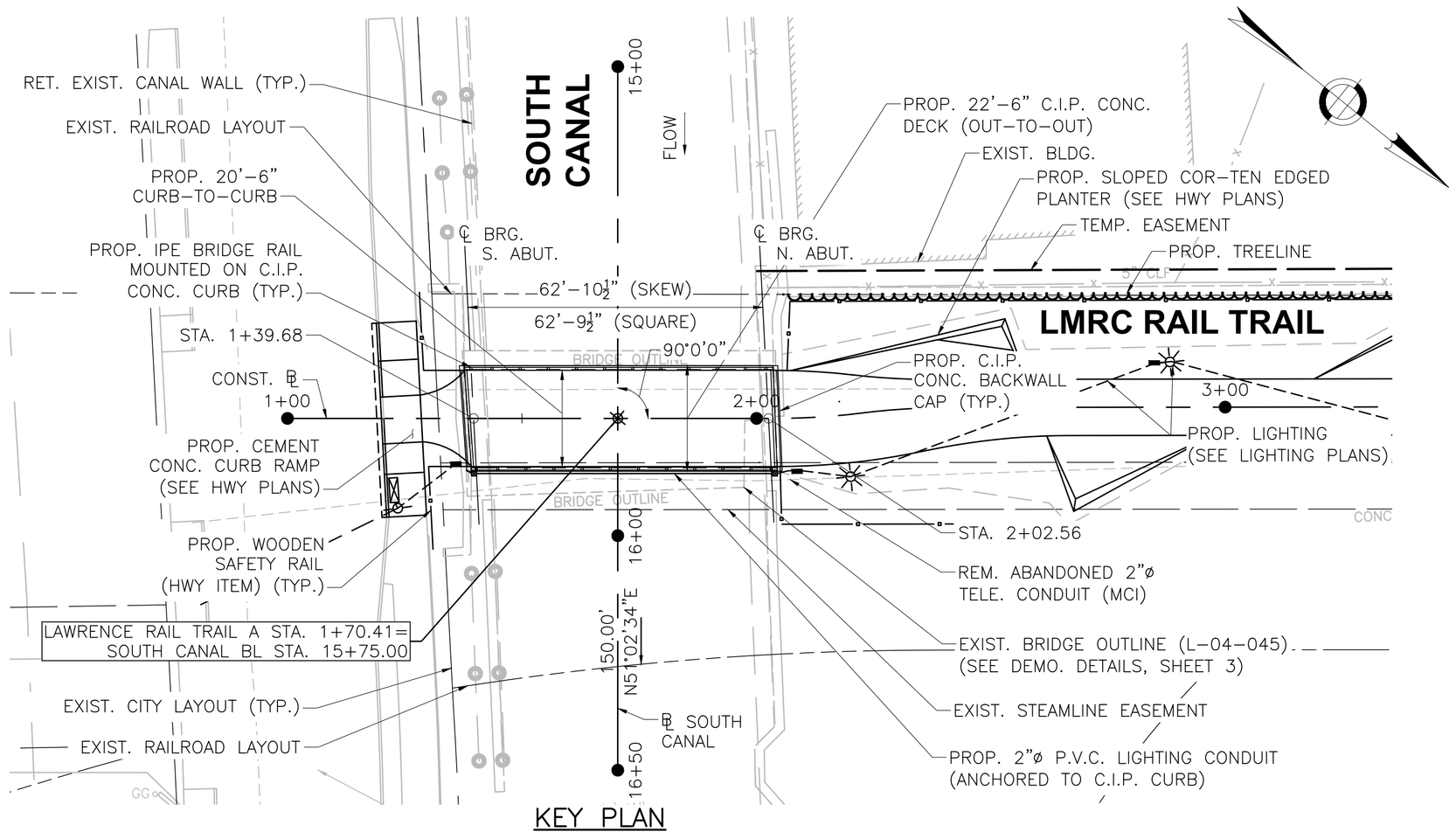

KEY PLAN
SCALE: 1"=20'

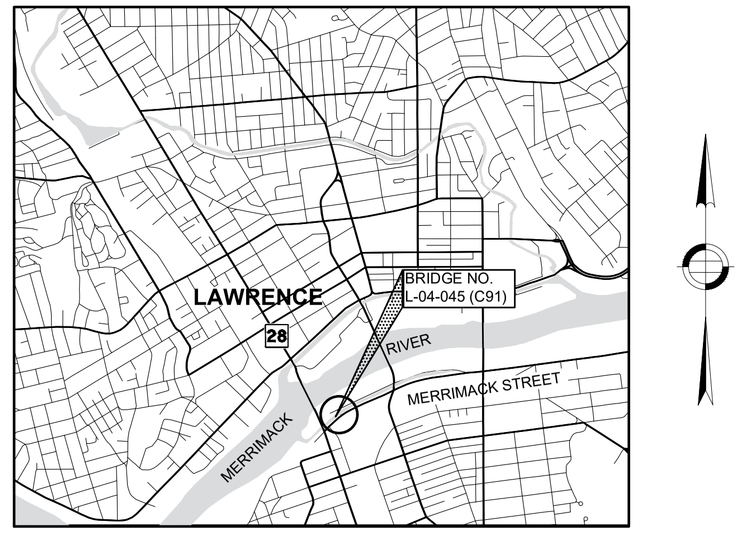

LOCUS MAP
SCALE: 1"=2000'

LAWRENCE
LMRC RAIL TRAIL OVER SOUTH CANAL

STATE	FED. AID PROJ. NO.	SHEET NO.	TOTAL SHEETS
MA	-	150	225
PROJECT FILE NO.		608930	

KEY PLAN, PROFILES, LOCUS, AND INDEX

INDEX OF SHEETS

SHEET NO.	DESCRIPTION
1	KEY PLAN, PROFILES, LOCUS, AND INDEX
2	GENERAL NOTES
3	PLAN AND ELEVATION
4	SUPERSTRUCTURE DETAILS (1 OF 2)
5	SUPERSTRUCTURE DETAILS (2 OF 2)
6	RAILING DETAILS

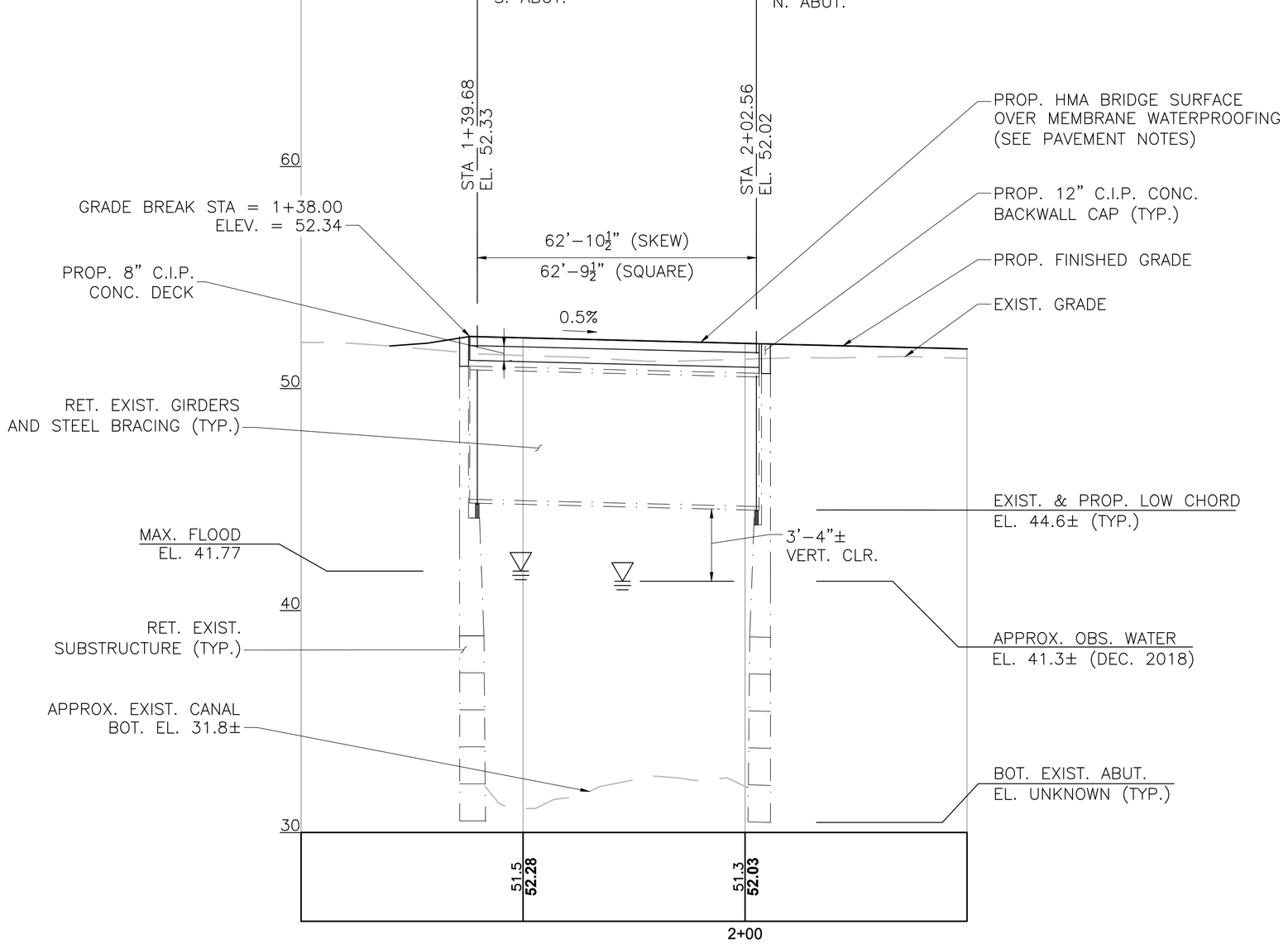

LMRC RAIL TRAIL PROFILE
HORIZONTAL SCALE: 1" = 20'
VERTICAL SCALE" 1" = 4'

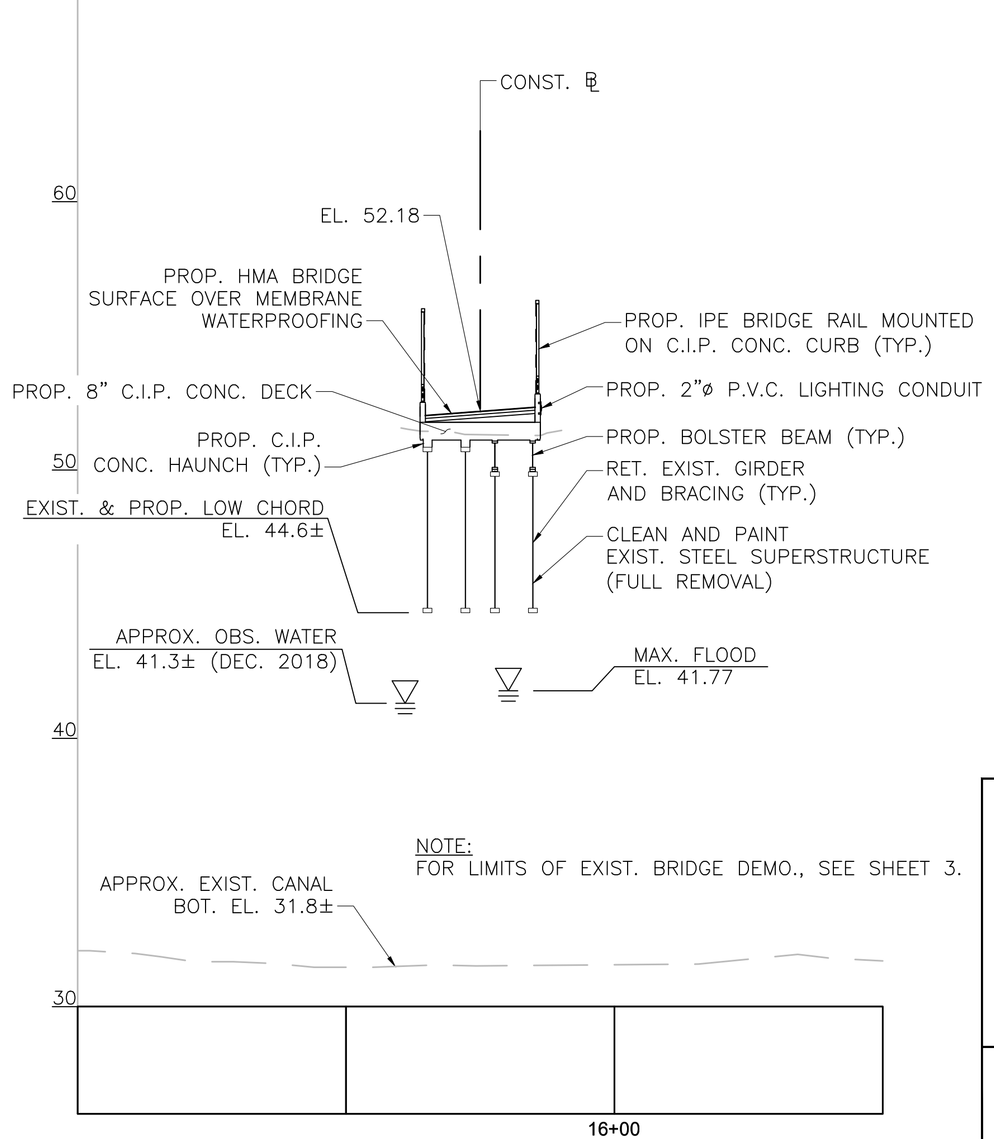

SOUTH CANAL PROFILE
HORIZONTAL SCALE: 1" = 20'
VERTICAL SCALE" 1" = 4'

TEC
The Engineering Corp
282 Merrimack Street, Second Floor
Lawrence, MA 01843
978-794-1792

10/28/2022	FIRST STRUCTURAL SUBMITTAL

massDOT Massachusetts Department of Transportation Highway Division

PROPOSED BRIDGE REHABILITATION

LAWRENCE

LMRC RAIL TRAIL
OVER SOUTH CANAL

MASSACHUSETTS DEPARTMENT OF TRANSPORTATION
HIGHWAY DIVISION
10 PARK PLAZA BOSTON, MASS

STATE BRIDGE ENGINEER _____ CHIEF ENGINEER _____

SHEET 1 OF 6 SHEETS BRIDGE NO. L-04-045 (C91)

FOR PERMITTING PURPOSES - NOT FOR CONSTRUCTION

608930_BR1(L04045).DWG Plotted on 28-Oct-2022 2:12 PM

Proposal No. 608930-128034

October 28, 2022

First Structural Submittal (S1)

A00869 - 169

STATE	FED. AID PROJ. NO.	SHEET NO.	TOTAL SHEETS
MA	-	151	225
PROJECT FILE NO.	608930		

GENERAL NOTES

DESIGN:

IN ACCORDANCE WITH THE 2020 AMERICAN ASSOCIATION OF STATE HIGHWAY TRANSPORTATION OFFICIALS (AASHTO) LRFD BRIDGE DESIGN SPECIFICATION, 9TH EDITION FOR H10 VEHICULAR LOADING AND 90 PSF PEDESTRIAN LOADING.

MASSDOT BENCHMARKS:

BENCHMARK 1: MAG NAIL (42)
N: 3080300.036
E: 746593.348
ELEVATION= 52.01'

BENCHMARK 2: MAG NAIL (41)
N: 3080446.799
E: 746438.265
ELEVATION= 51.35'

ELEVATIONS ARE BASED ON THE NORTH AMERICAN VERTICAL DATUM (NAVD) OF 1988.

SCALES:

SCALES NOTED ON THE PLANS ARE NOT APPLICABLE TO REDUCED SIZE PRINTS. DIVIDE SCALES BY 2 FOR HALF–SIZE PRINTS (A3).

FOUNDATIONS:

FOUNDATIONS MAY BE ALTERED, IF NECESSARY TO SUIT CONDITIONS ENCOUNTERED DURING CONSTRUCTION, WITH THE APPROVAL OF THE ENGINEER.

UNSUITABLE MATERIAL:

ALL UNSUITABLE MATERIAL SHALL BE REMOVED WITHIN THE LIMITS OF THE FOUNDATIONS OF THE STRUCTURE, AS DIRECTED BY THE ENGINEER.

ANCHOR BOLTS:

ALL ANCHOR BOLTS SHALL BE SET BY TEMPLATE BEFORE THE CONCRETE IS PLACED.

CONCRETE:

ALL CONCRETE SHALL BE 4000 PSI, ¾", 585 HP CEMENT CONCRETE.

REINFORCEMENT:

ALL REINFORCING STEEL SHALL BE EPOXY COATED.

REINFORCING STEEL SHALL CONFORM TO THE REQUIREMENTS OF AASHTO M 31 GRADE 60. UNLESS OTHERWISE NOTED ON THE CONSTRUCTION DRAWINGS, ALL BARS SHALL BE LAPPED AS FOLLOWS:

MODIFICATION CONDITION:	#4 BARS	#5 BARS	#6 BARS
1. NONE	16"	19"	23"
2. 12" OF CONCRETE BELOW BAR	20"	25"	30"
3. EPOXY COATED BARS, COVER < 3db, OR CLEAR SPACING < 6db	23"	29"	34"
4. COATED BARS, ALL OTHER CASES	18"	23"	27"
5. CONDITION 2. AND 3.	26"	32"	39"
6. CONDITION 2. AND 4.	24"	30"	36"

ALL OTHER BARS SHALL BE LAPPED AS SHOWN ON THE CONSTRUCTION DRAWINGS.

MEMBRANE WATERPROOFING:

ALL MEMBRANE WATERPROOFING USED ON BRIDGE DECKS SHALL BE MEMBRANE WATERPROOFING FOR BRIDGE DECKS – SPRAY APPLIED.

STRUCTURAL STEEL

ALL STRUCTURAL STEEL SHALL CONFORM TO THE REQUIREMENTS OF AASHTO M 270, GRADE 36 AND SHALL BE HOT–DIP GALVANIZED, EXCEPT AS NOTED. ALL BOLTS SHALL BE ASTM 3125. DIAMETERS AS SHOWN ON PLANS. ALL BOLT HOLES SHALL BE 1/16" LARGER THAN BOLTS. ALL BOLTED CONNECTIONS SHALL BE CONSIDERED SLIP CRITICAL WITH CLASS C FAYING SURFACES.

UTILITIES:

DURING CONSTRUCTION, THE CONTRACTOR SHALL LOCATE AND PROTECT FROM DAMAGE ALL UTILITIES THAT ARE TO REMAIN IN PLACE.

GEOTECHNICAL:

NO GEOTECHNICAL TESTING WAS PERFORMED AT THIS LOCATION.

LUMBER:

LUMBER FOR HAND RAILS, RAIL CAPS, AND RAIL POSTS SHALL BE IPE.

MINIMUM DESIGN VALUES FOR IPE			
SIZE	BENDING Fb (PSI)	CRUSHING STRENGTH (PSI)	MODULUS OF ELASTICITY E (PSI)
ALL	22,500	10,000	2,900,000

IPE TIMBER SHALL BE FINISHED WITH A PRESERVATIVE OIL COATING.

EXISTING CONDITIONS:

1. NO AS–BUILT PLANS ARE AVAILABLE FOR THIS STRUCTURE.
2. CONTRACTOR TO FIELD VERIFY ALL GRADES AND DIMENSIONS.

ESTIMATED QUANTITIES
(NOT GUARANTEED)

ITEM DESCRIPTION	QUANTITY	UNITS
PARTIAL DEMOLITION OF SUPERSTRUCTURE OF BRIDGE NO. L–04–045 (C91).....	1	LS
SUPERPAVE BRIDGE SURFACE COURSE – 9.5 (SSC–B–9.5).....	40	TON
SUPERPAVE BRIDGE PROTECTIVE COURSE – 9.5 (SSC–B – 9.5).....	20	TON
CLEAN AND PAINT (FULL REMOVAL) STEEL BRIDGE NO. L–04–045 (C91).....	1	LS
ALTERATION TO BRIDGE STRUCTURE NO. L–04–045 (C91).....	1	LS
TEMPORARY PROTECTIVE SHIELDING BRIDGE NO. L–04–045 (C91).....	1	LS

DATE	DESCRIPTION
10/28/2022	FIRST STRUCTURAL SUBMITTAL

THIS SHEET IS APPROVED FOR CONSTRUCTION BY MASSDOT
AUTHORIZED SIGNATORY: _____ STATE BRIDGE ENGINEER
USE ONLY PRINTS OF LATEST DATE

FOR PERMITTING PURPOSES - NOT FOR CONSTRUCTION

608930_BR2(L04045).DWG Plotted on 28-Oct-2022 2:12 PM
Proposal No. 608930-128034
October 28, 2022
First Structural Submittal (S1)
A00869 - 170

A00869 - 171

Proposal No. 608930-128034

608930_BR3(L04045).DWG Plotted on 28-Oct-2022 2:13 PM

LAWRENCE
LMRC RAIL TRAIL OVER SOUTH CANAL

STATE	FED. AID PROJ. NO.	SHEET NO.	TOTAL SHEETS
MA	-	152	225
PROJECT FILE NO.	608930		

PLAN AND ELEVATION

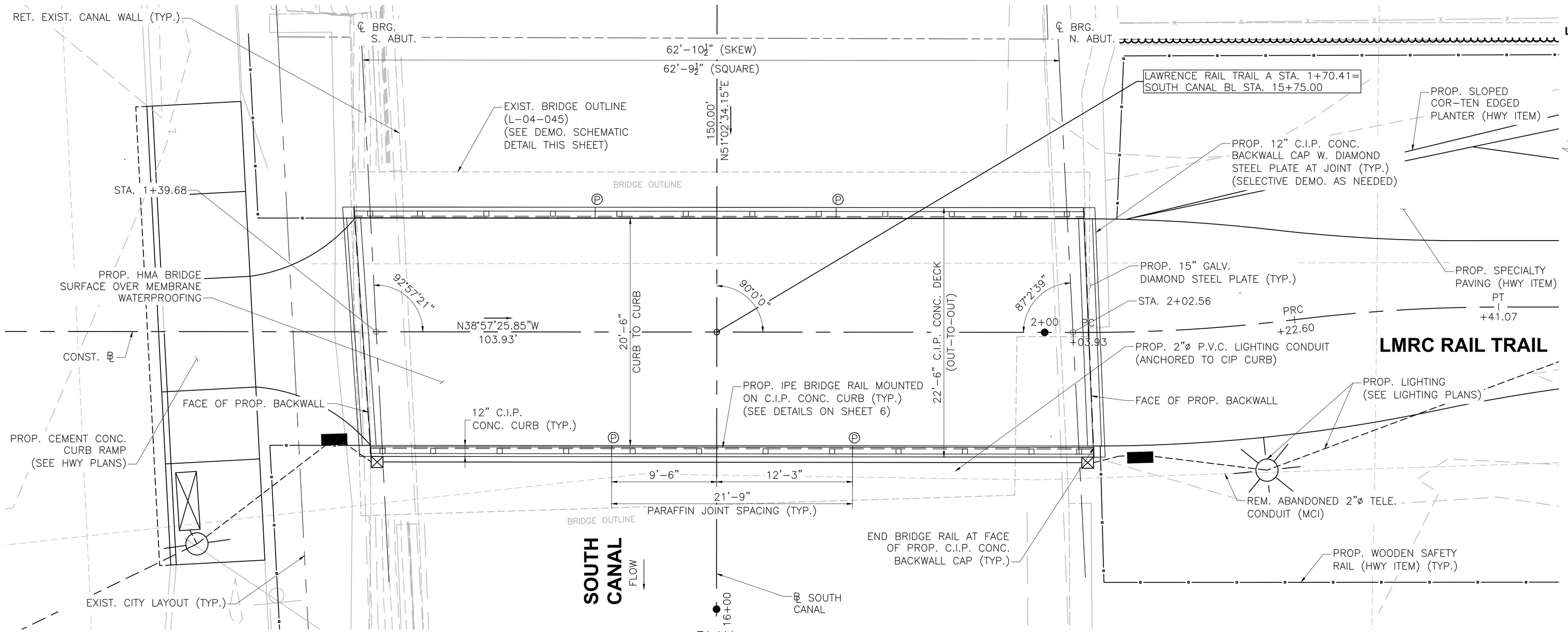

LEGEND:
Ⓟ PROPOSED PARAFFIN JOINT

PLAN
SCALE: ⅕"=1'-0"

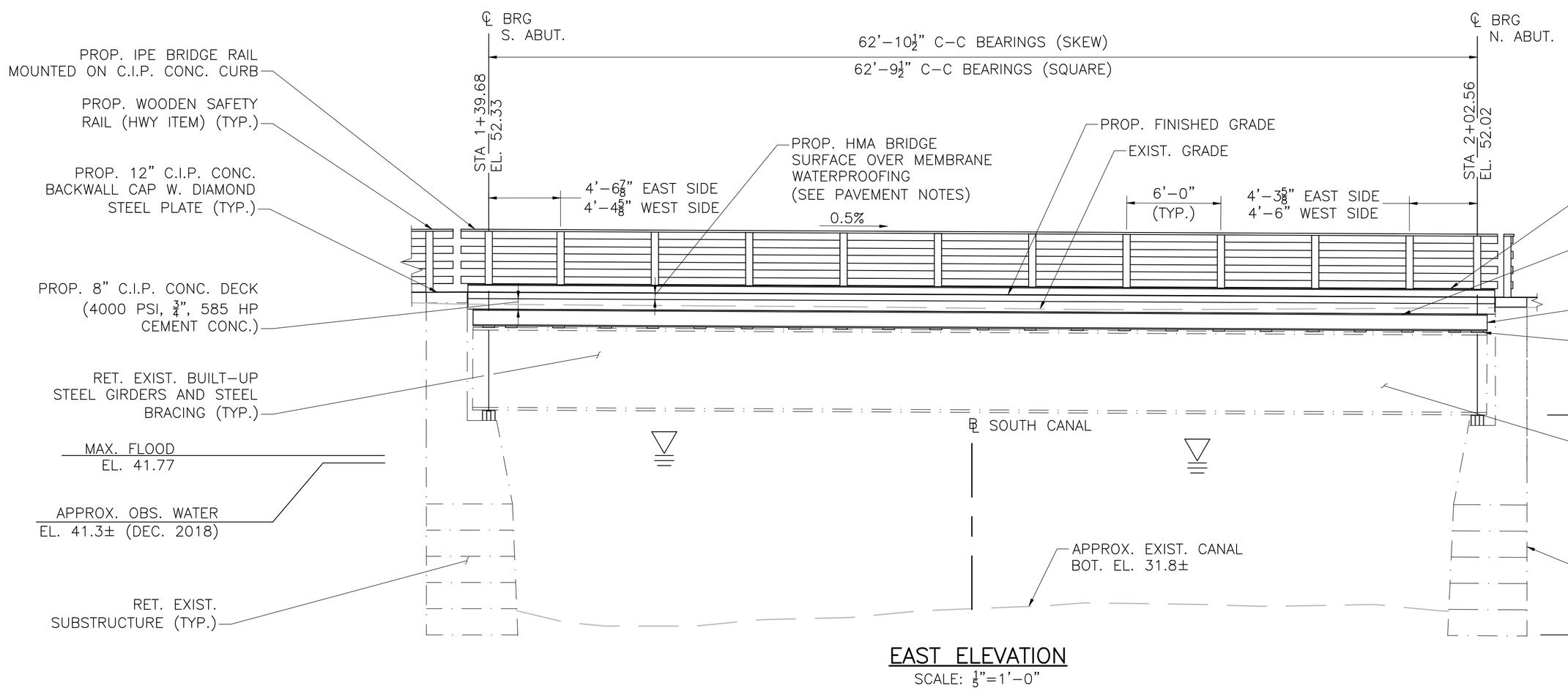

EAST ELEVATION
SCALE: ⅕"=1'-0"

NOTE: PROPOSED LIGHTING CONDUIT NOT SHOWN FOR CLARITY.

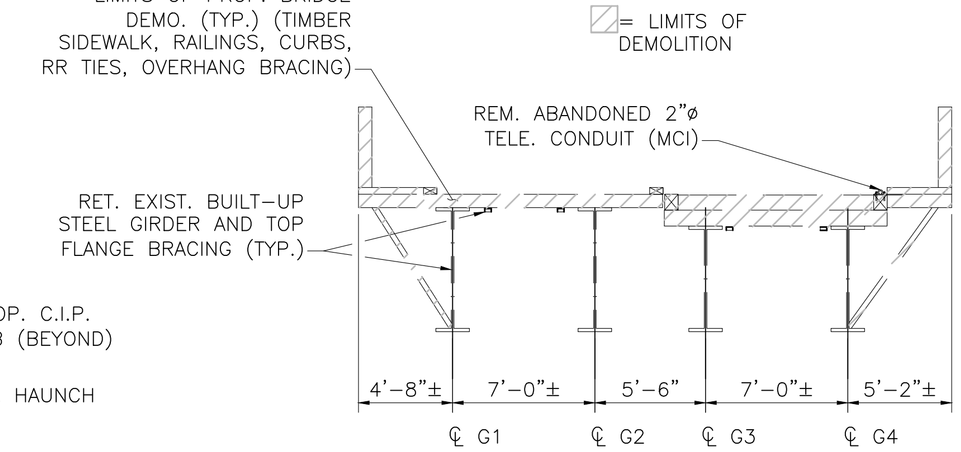

DEMOLITION SCHEMATIC
NTS

10/28/2022	FIRST STRUCTURAL SUBMITTAL
DATE	DESCRIPTION

THIS SHEET IS APPROVED FOR CONSTRUCTION BY MASSDOT
AUTHORIZED SIGNATORY: STATE BRIDGE ENGINEER
USE ONLY PRINTS OF LATEST DATE

First Structural Submittal (S1) October 28, 2022

FOR PERMITTING PURPOSES - NOT FOR CONSTRUCTION

STATE	FED. AID PROJ. NO.	SHEET NO.	TOTAL SHEETS
MA	-	153	225
PROJECT FILE NO.	608930		

SUPERSTRUCTURE DETAILS (1 OF 2)

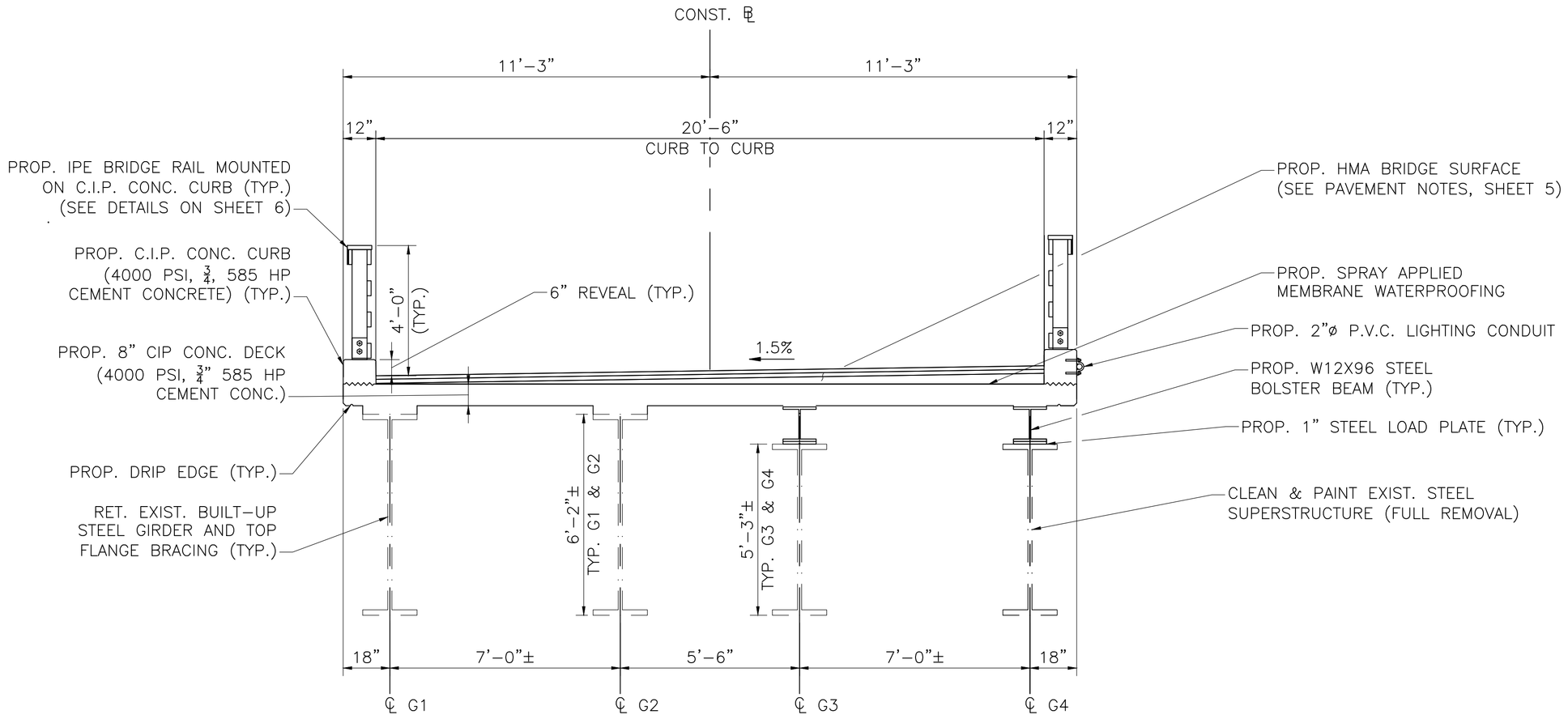

TYPICAL SECTION
SCALE: ⅜" = 1'–0"

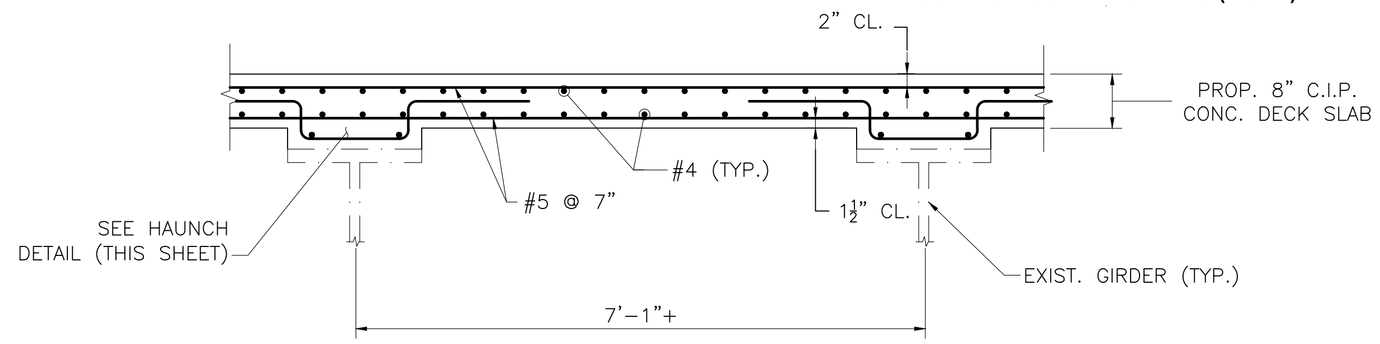

NOTES:

1. DECK SLAB SHALL BE 4000 PSI, ¾ IN, 585 HP CEMENT CONCRETE.
2. LONGITUDINAL REINFORCEMENT SHALL BE PLACED PARALLEL TO THE ℄ OF CONSTRUCTION.

   TRANSVERSE (PRIMARY) REINFORCEMENT SHALL BE PLACED PERPENDICULAR TO THE ℄ OF CONSTRUCTION.
3. ALL REINFORCEMENT AND SUPPORT DEVICES SHALL BE COATED.
4. THE FINISHED SURFACE OF BRIDGE DECK SHALL BE SMOOTH AND WITHOUT ANY PROJECTIONS THAT COULD PUNCTURE THE MEMBRANE WATERPROOFING OR DEPRESSIONS THAT COULD RETAIN WATER.

TYPICAL DECK REINFORCEMENT
SCALE: ¾" = 1'–0"

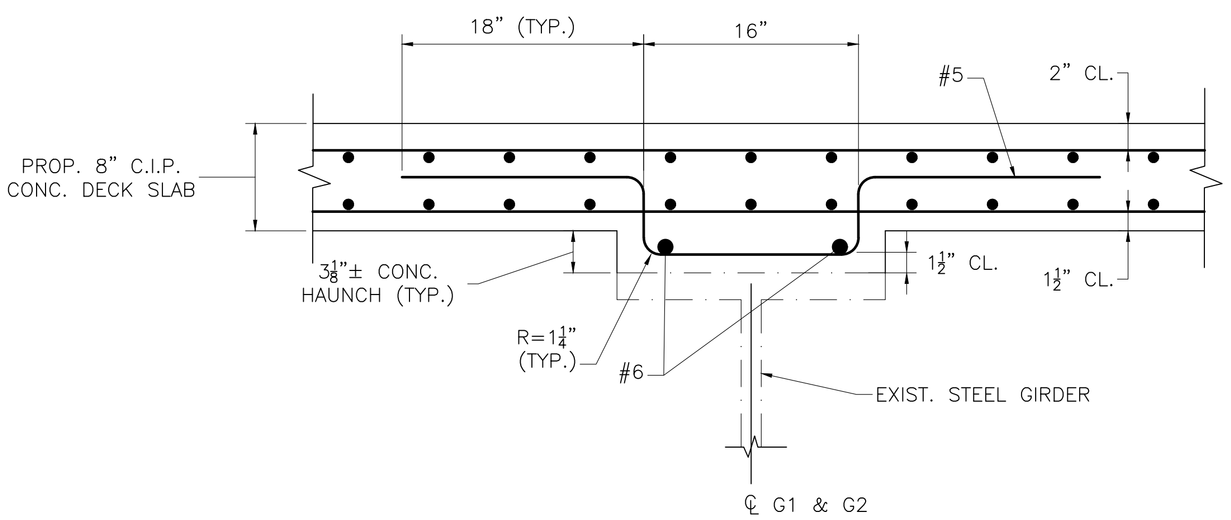

HAUNCH DETAIL (G1 AND G2)
SCALE: 1½" = 1'–0"

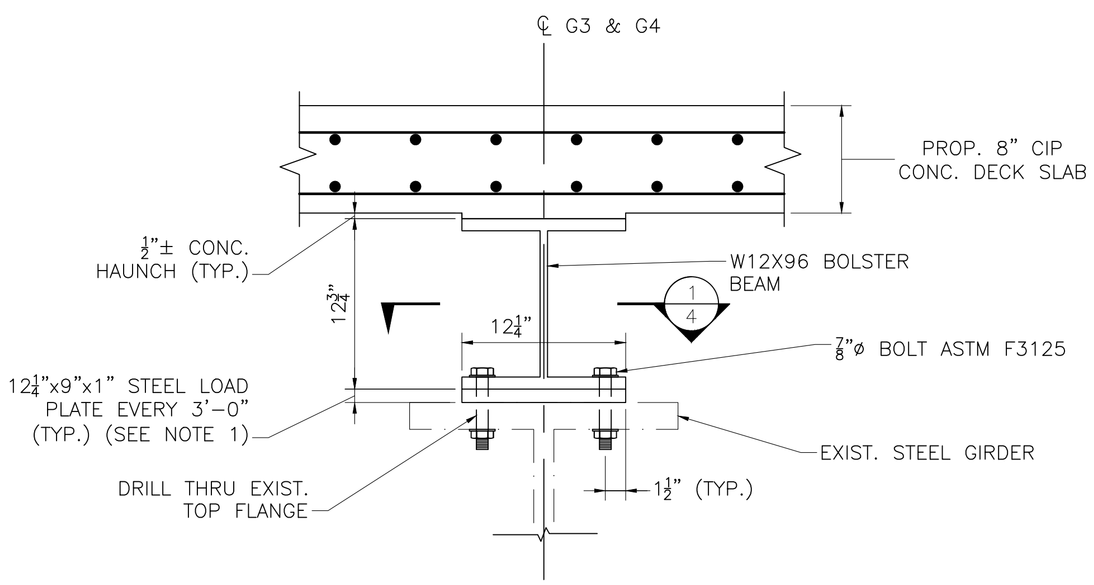

HAUNCH DETAIL (G3 AND G4)
SCALE: 1½" = 1'–0"

NOTE:
1. STEEL LOAD PLATES SPACED TO AVOID TOP FLANGE BRACING, SPACING SHOWN IS APPROXIMATE.

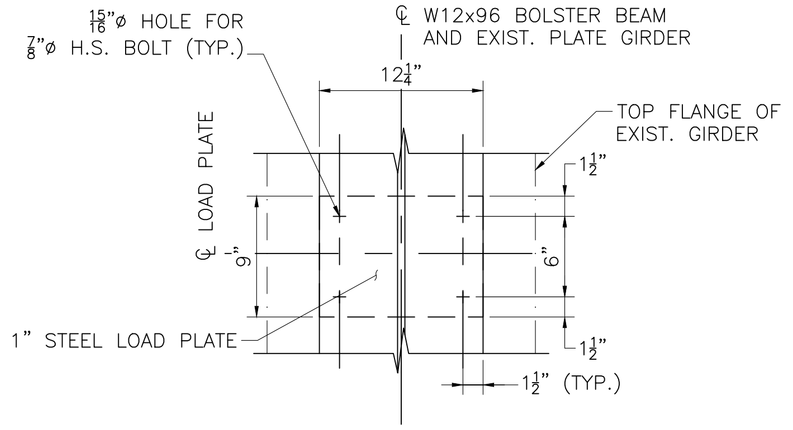

SECTION 1
SCALE: 1½" = 1'–0"

10/28/2022	FIRST STRUCTURAL SUBMITTAL
DATE	DESCRIPTION

THIS SHEET IS APPROVED FOR CONSTRUCTION BY MASSDOT
AUTHORIZED SIGNATORY: _____ STATE BRIDGE ENGINEER

USE ONLY PRINTS OF LATEST DATE

FOR PERMITTING PURPOSES - NOT FOR CONSTRUCTION

608930_BR4-7(L04045).DWG Plotted on 28-Oct-2022 2:13 PM
Proposal No. 608930-128034
October 28, 2022
First Structural Submittal (S1)
A00869 - 172

LAWRENCE
LMRC RAIL TRAIL OVER SOUTH CANAL

STATE	FED. AID PROJ. NO.	SHEET NO.	TOTAL SHEETS
MA	-	154	225
PROJECT FILE NO.	608930		

SUPERSTRUCTURE DETAILS (2 OF 2)

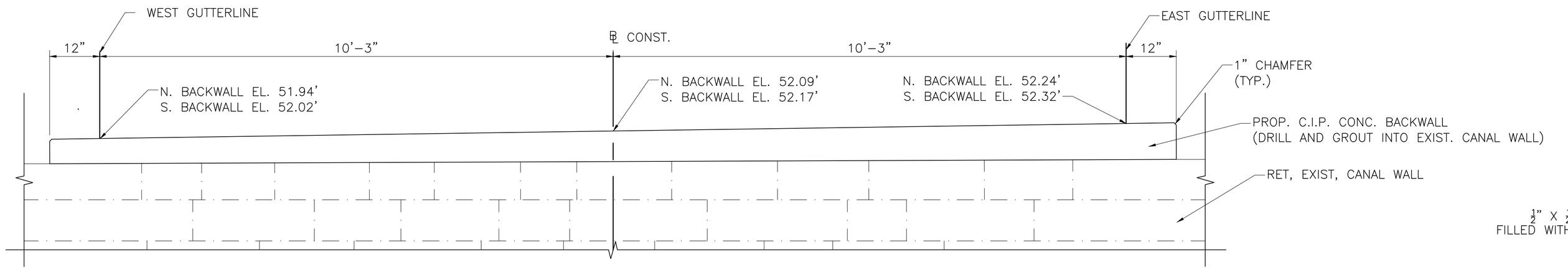

NOTE:
DOWELS NOT SHOWN FOR CLARITY.

BACKWALL ELEVATION
SCALE: ¾" = 1'-0"

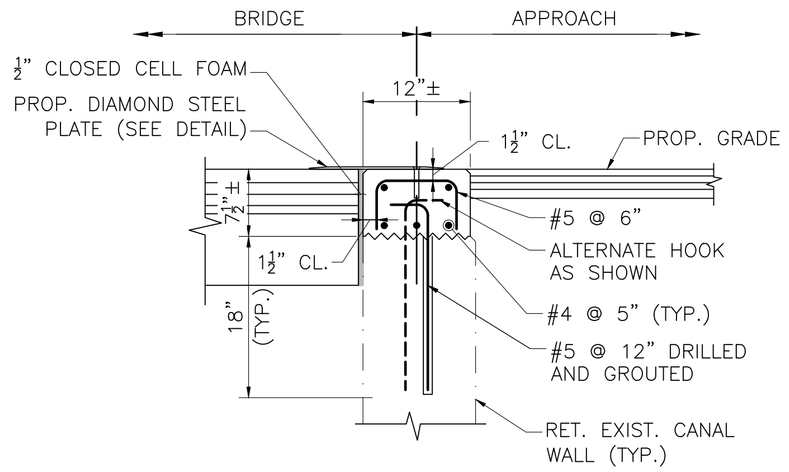

NOTES:
1. CONTRACTOR TO VERIFY MASONRY ABUTMENT DIMENSIONS FOR PROPOSED CONCRETE CAP.
2. PROPOSED CONCRETE CAP SHALL BE 4000 PSI, ¾ IN, 585 HP CONCRETE.

BACKWALL CONCRETE CAP DETAIL
SCALE: 1" = 1'-0"

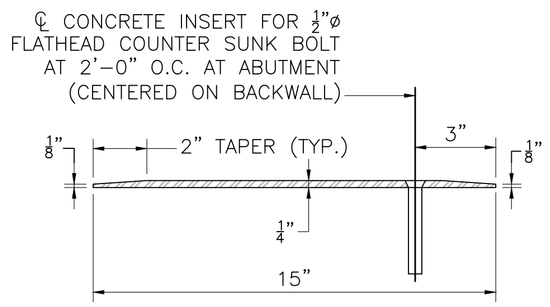

DIAMOND STEEL PLATE DETAIL
SCALE: 3" = 1'-0"

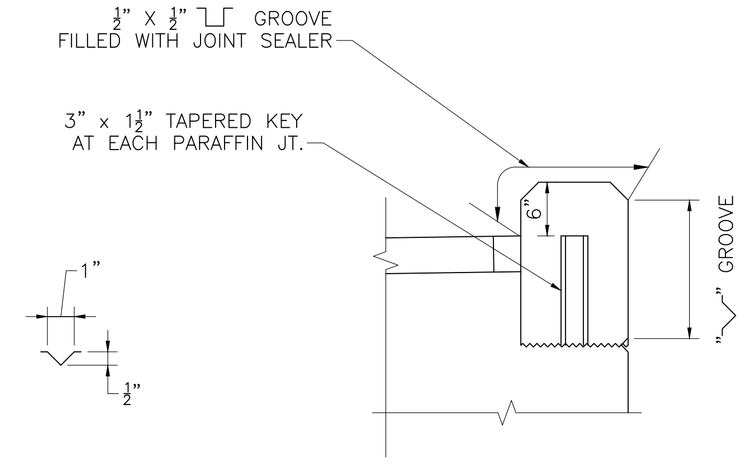

NOTES:
1. ALL CONCRETE ABOVE SLAB SHALL BE POURED IN ALTERNATING SECTIONS WITH NO LESS THAN 3 DAYS BETWEEN POURS.
2. DO NOT CARRY LONGITUDINAL BARS THROUGH THE PARAFFIN JOINTS. END THE REINFOCEMENT 2" CLEAR OF JOINT.
3. JOINT SHALL BE SQUARE TO FACE OF CURB.

PARAFFIN JOINT DETAIL
SCALE: 1" = 1'-0"

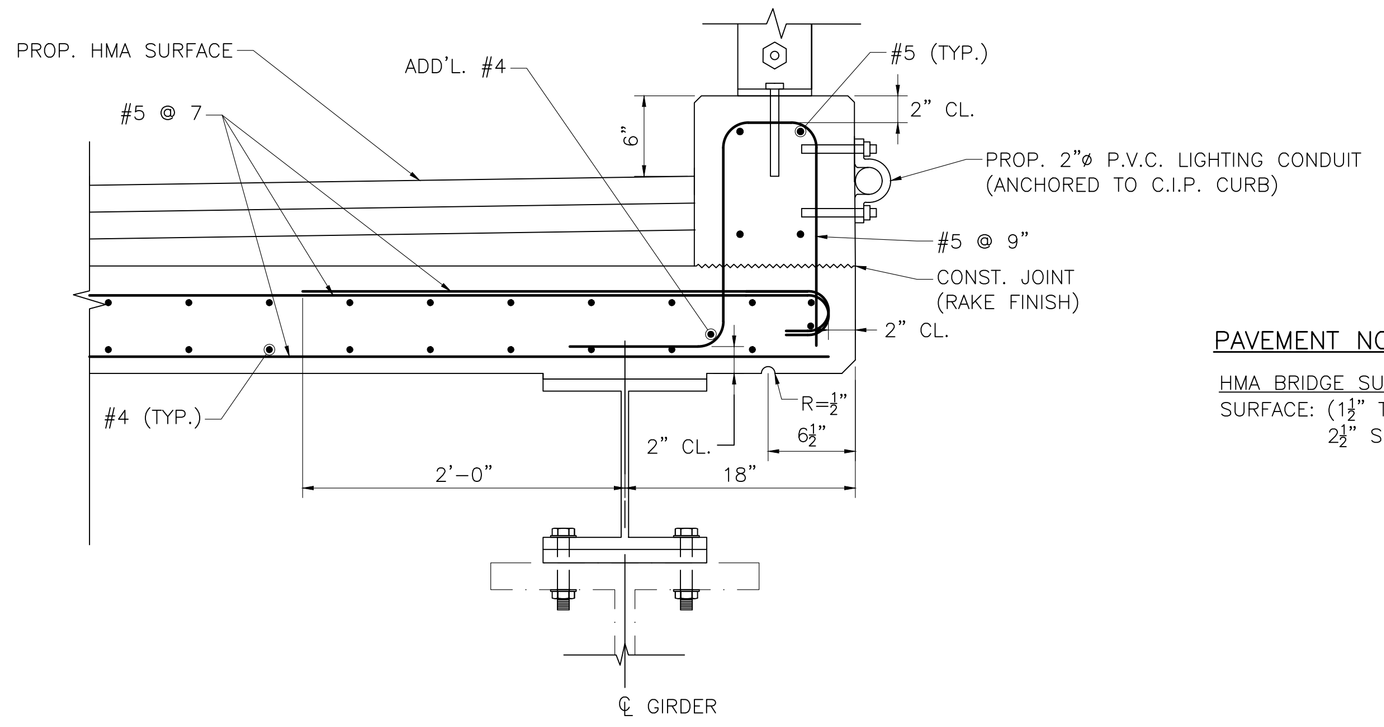

SECTION THROUGH CURB AND OVERHANG (EAST SIDE SHOWN, WEST SIDE SIMILAR)
SCALE: 1½" = 1'-0"

PAVEMENT NOTES

HMA BRIDGE SURFACE
SURFACE: (1½" TO 4½") VARIABLE DEPTH SUPERPAVE BRIDGE SURFACE COURSE (SSC-B-9.5) OVER 2½" SUPERPAVE BRIDGE PROTECTIVE COURSE (SPC-B-9.5)

10/28/2022	FIRST STRUCTURAL SUBMITTAL
DATE	DESCRIPTION

THIS SHEET IS APPROVED FOR CONSTRUCTION BY MASSDOT
AUTHORIZED SIGNATORY: STATE BRIDGE ENGINEER
USE ONLY PRINTS OF LATEST DATE

608930_BR4-7(L04045).DWG Plotted on 28-Oct-2022 2:13 PM
Proposal No. 608930-128034
October 28, 2022
First Structural Submittal (S1)
A00869 - 173
FOR PERMITTING PURPOSES - NOT FOR CONSTRUCTION

LAWRENCE
LMRC RAIL TRAIL OVER SOUTH CANAL

STATE	FED. AID PROJ. NO.	SHEET NO.	TOTAL SHEETS
MA	-	155	225
PROJECT FILE NO.	608930		

RAILING DETAILS

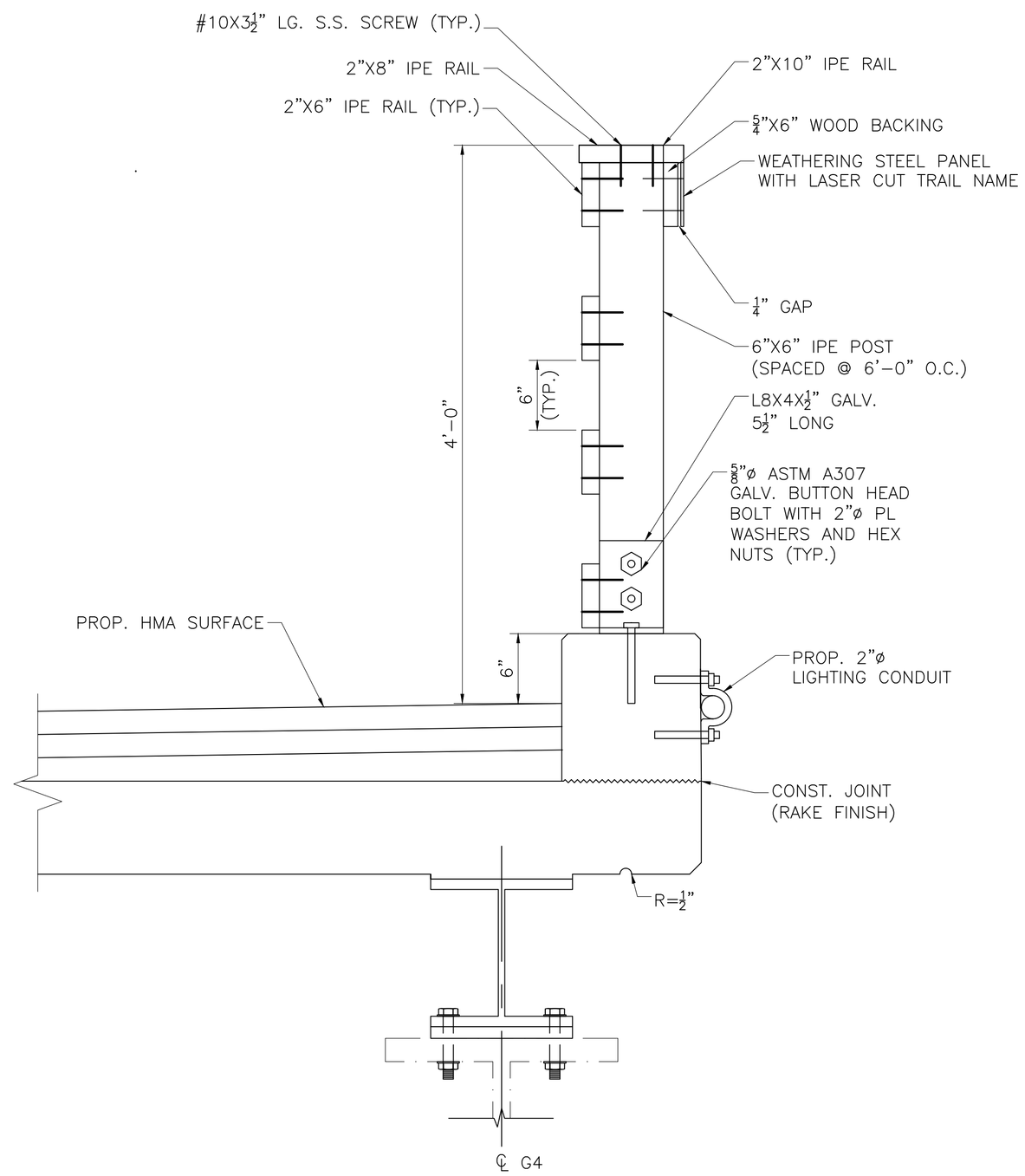

TRANSVERSE SECTION AT EAST SIDE, WEST SIDE SIMILAR

SCALE: 1½" = 1'-0"

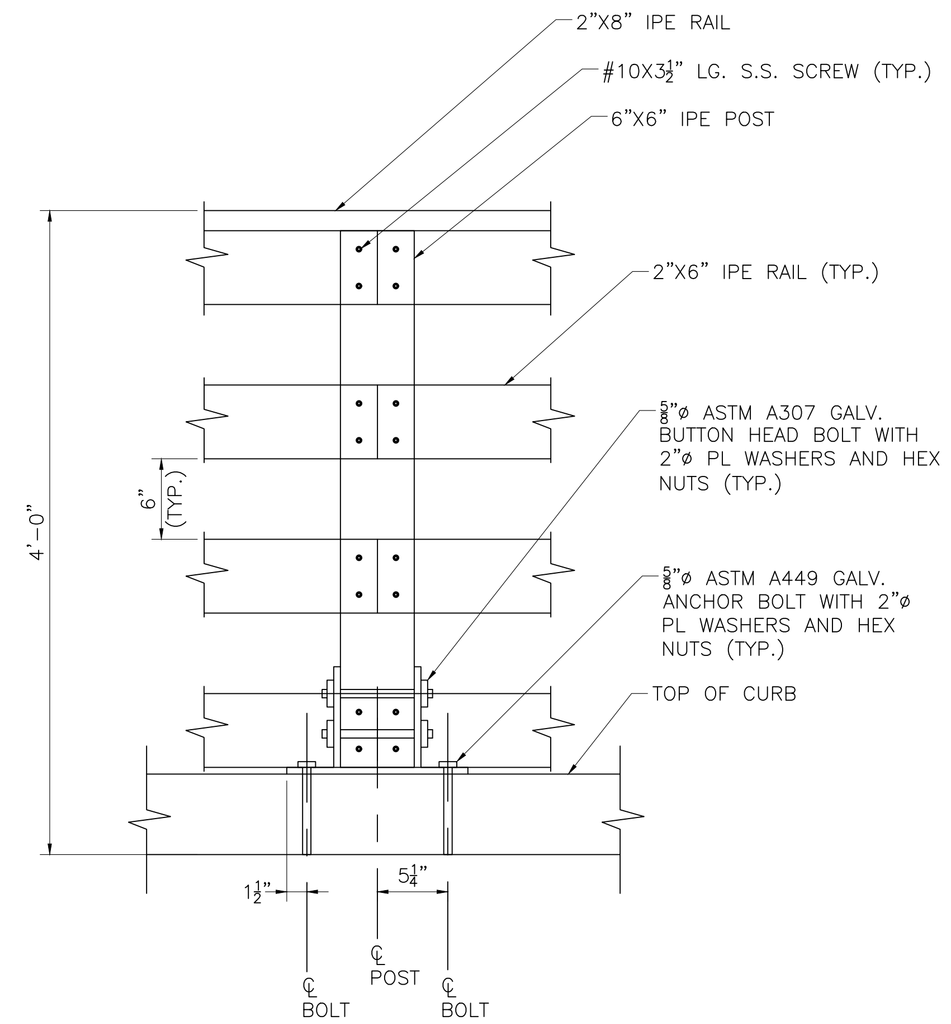

RAIL TO POST CONNECTION

SCALE: 1½" = 1'-0"

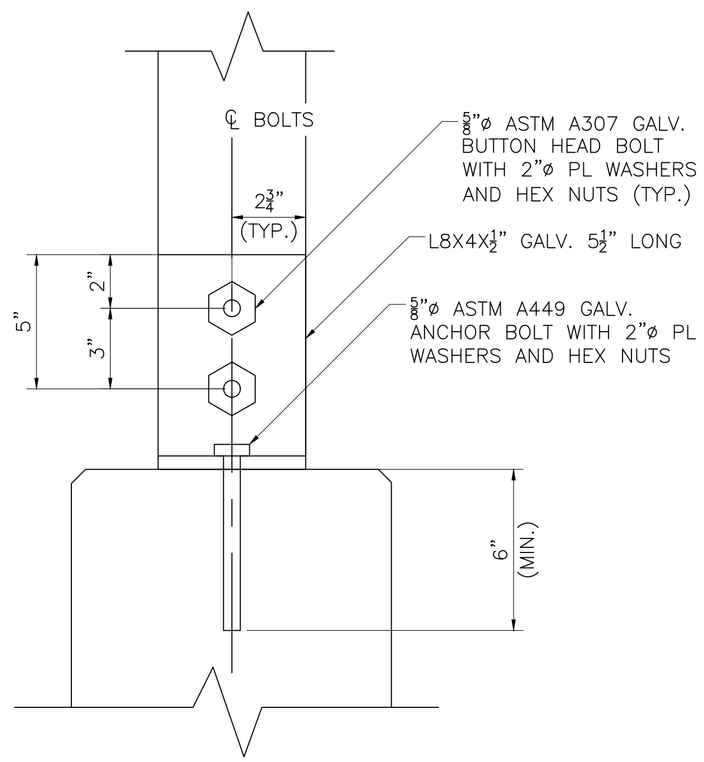

POST TO CURB CONNECTION

SCALE: 3" = 1'-0"

10/28/2022	FIRST STRUCTURAL SUBMITTAL
DATE	DESCRIPTION

THIS SHEET IS APPROVED FOR CONSTRUCTION BY MASSDOT
AUTHORIZED SIGNATORY: _____ STATE BRIDGE ENGINEER

USE ONLY PRINTS OF LATEST DATE

SHEET 6 OF 6 SHEETS BRIDGE NO. L-04-045 (C91)

FOR PERMITTING PURPOSES - NOT FOR CONSTRUCTION

608930_BR4-7(L04045).DWG Plotted on 28-Oct-2022 2:13 PM

First Structural Submittal (S1) October 28, 2022

Proposal No. 608930-128034

A00869 - 174

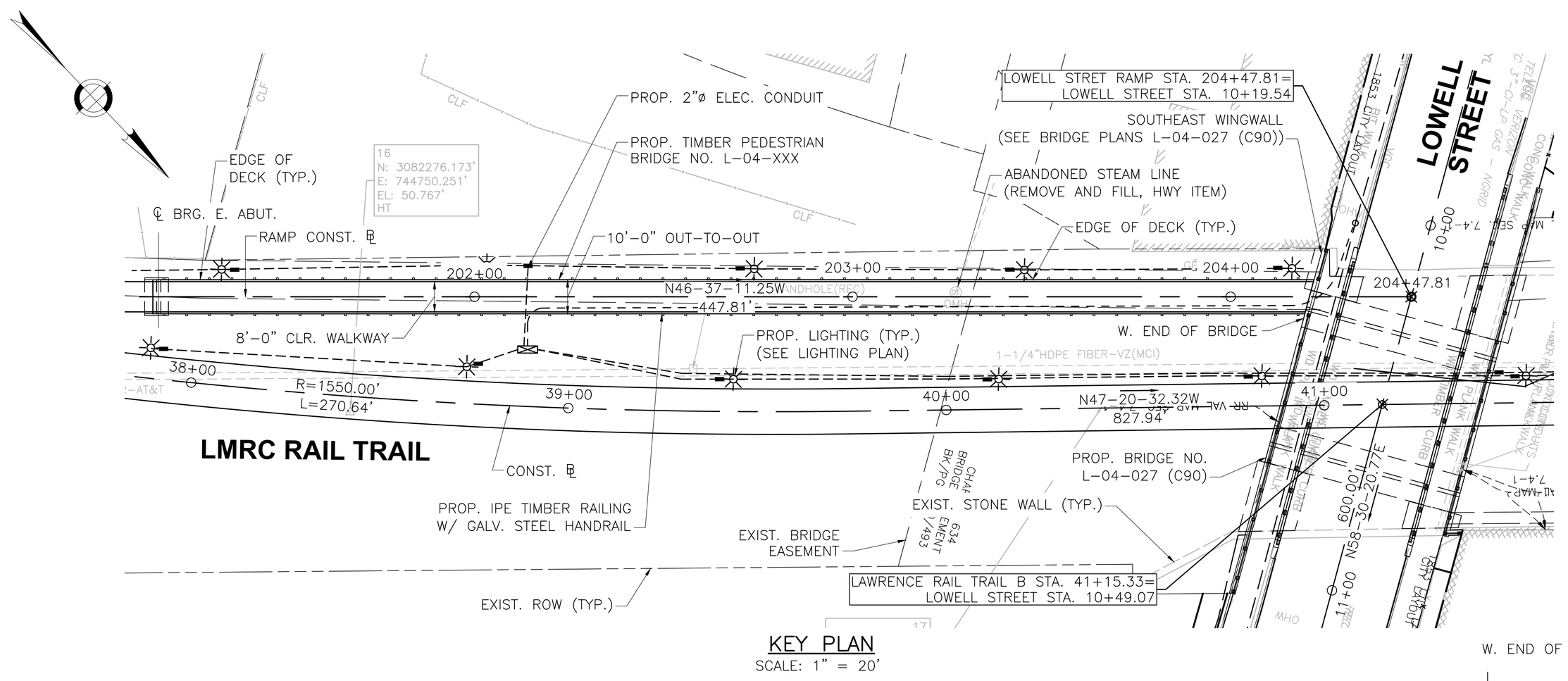

KEY PLAN
SCALE: 1" = 20'

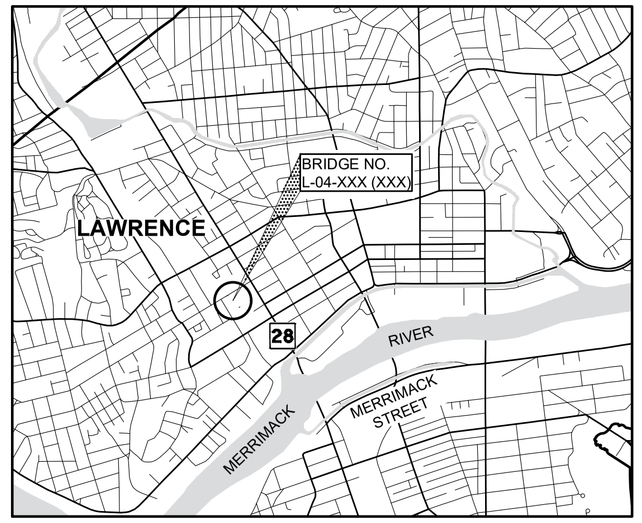

LOCUS MAP
SCALE: 1"=2000'

LAWRENCE
ACCESS RAMP TO LOWELL STREET

STATE	FED. AID PROJ. NO.	SHEET NO.	TOTAL SHEETS
MA	-	156	225
PROJECT FILE NO.		608930	

KEY PLAN, PROFILE, LOCUS, AND INDEX

INDEX OF SHEETS

SHEET NO.	DESCRIPTION
1	KEY PLAN, PROFILE, LOCUS, AND INDEX
2	GENERAL NOTES
3	FRAMING PLAN AND ELEVATION
4	SUBSTRUCTURE DETAILS
5	SUPERSTRUCTURE DETAILS

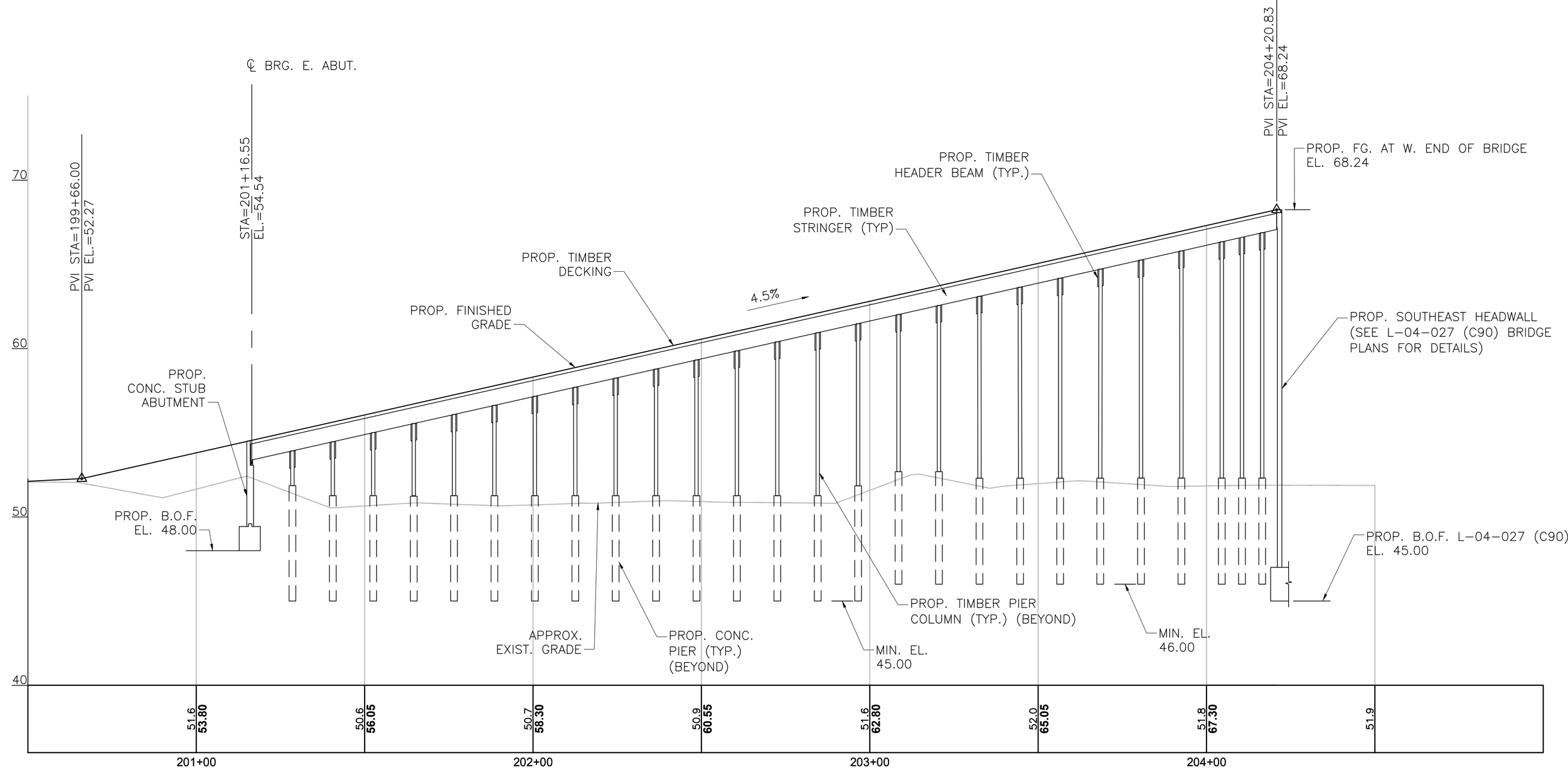

NOTE:

IPE RAILING NOT SHOWN FOR CLARITY

ACCESS RAMP PROFILE
HORIZONTAL SCALE: 1" = 20'
VERTICAL SCALE: 1" = 4'

	10/28/2022	FIRST STRUCTURAL SUBMITTAL

massDOT Massachusetts Department of Transportation Highway Division

PROPOSED BRIDGE

LAWRENCE

ACCESS RAMP TO LOWELL STREET

MASSACHUSETTS DEPARTMENT OF TRANSPORTATION
HIGHWAY DIVISION
10 PARK PLAZA BOSTON, MASS

TEC The Engineering Corp
282 Merrimack Street, Second Floor
Lawrence, MA 01843
978-794-1792

STATE BRIDGE ENGINEER

CHIEF ENGINEER

SHEET 1 OF 5 SHEETS BRIDGE NO. L-04-XXX (XXX)

FOR PERMITTING PURPOSES - NOT FOR CONSTRUCTION

608930_BR1(L04XXX).DWG Plotted on 28-Oct-2022 2:50 PM
Proposal No. 608930-128034
October 28, 2022
First Structural Submittal (S1)
A00869 - 175

LAWRENCE
ACCESS RAMP TO LOWELL STREET

STATE	FED. AID PROJ. NO.	SHEET NO.	TOTAL SHEETS
MA	-	157	225
PROJECT FILE NO.	608930		

GENERAL NOTES

DESIGN:

IN ACCORDANCE WITH THE 2020 AASHTO LRFD BRIDGE DESIGN SPECIFICATIONS AND THE AASHTO LRFD GUIDE SPECIFICATIONS FOR DESIGN OF PEDESTRIAN BRIDGES, 2009 FOR 90 PSF PEDESTRIAN LOADING.

SURVEY BENCHMARKS:

BENCHMARK NO. 16
N: 3082276.173'
E: 744750.251'
EL: 50.767'

BENCHMARK NO. 17
N: 3082411.388'
E: 744603.460'
EL: 51.474'

ELEVATIONS ARE BASED ON THE NORTH AMERICAN VERTICAL DATUM (NAVD) OF 1988.

SCALES:

SCALES NOTED ON THE PLANS ARE NOT APPLICABLE TO REDUCED SIZE PRINTS. DIVIDE SCALES BY 2 FOR HALF-SIZE PRINTS (A3).

TIMBER BRIDGE STRUCTURE:

THE CONTRACTOR SHALL FURNISH AND INSTALL A TIMBER PEDESTRIAN BRIDGE STRUCTURE IN ACCORDANCE WITH DETAILS AS SHOWN ON THESE PLANS AND REQUIREMENTS AS STIPULATED IN THE SPECIAL PROVISIONS UNDER ITEM 995.012. CONSTRUCTION SHALL BE IN ACCORDANCE WITH THE RELEVANT REQUIREMENTS OF THE LATEST EDITION OF THE NATIONAL DESIGN SPECIFICATION FOR WOOD CONSTRUCTION AND THE AASHTO LRFD GUIDE BRIDGE DESIGN SPECIFICATIONS.

SURVEY:

THE CONTRACTOR SHALL CONDUCT HIS/HER OWN SURVEY TO REESTABLISH THE CENTERLINE OF CONSTRUCTION PRIOR TO ANY CONSTRUCTION ACTIVITIES. THE CONTRACTOR SHALL VERIFY ALL DIMENSIONS REQUIRED FOR THE PROPER PERFORMANCE OF HIS/HER WORK. FIELD CONDITIONS MAY EXIST THAT DEVIATE FROM THE TYPICAL AND THEORETICAL DIMENSIONS SHOWN ON THE PLANS. THE CONTRACTOR SHALL BE SOLELY RESPONSIBLE FOR THE FABRICATION AND FIT OF HIS/HER WORK.

UNSUITABLE MATERIAL:

ALL UNSUITABLE MATERIAL SHALL BE REMOVED WITHIN THE LIMITS OF THE FOUNDATIONS OF THE STRUCTURE, AS DIRECTED BY THE ENGINEER.

ANCHOR BOLTS:

ALL ANCHOR BOLTS SHALL BE SET BY TEMPLATE BEFORE THE CONCRETE IS PLACED. ANCHOR BOLTS SHALL CONFORM TO THE REQUIREMENTS OF ASTM F 1554 GRADE 36 UNLESS OTHERWISE NOTED ON THE PLANS.

REINFORCEMENT:

REINFORCING STEEL SHALL BE EPOXY COATED AND CONFORM TO THE REQUIREMENTS OF AASHTO M 31 GRADE 60. UNLESS OTHERWISE NOTED ON THE CONSTRUCTION DRAWINGS, ALL BARS SHALL BE LAPPED AS FOLLOWS:

MODIFICATION CONDITION:	#5 BARS
1. NONE	19"
2. 12" OF CONCRETE BELOW BAR	25"
3. EPOXY COATED BARS, COVER < 3db, OR CLEAR SPACING < 6db	29"
4. COATED BARS, ALL OTHER CASES	23"
5. CONDITION 2. AND 3.	32"
6. CONDITION 2. AND 4.	30"

ALL OTHER BARS SHALL BE LAPPED AS SHOWN ON THE CONSTRUCTION DRAWINGS

UTILITIES:

THE CONTRACTOR SHALL LOCATE AND PROTECT FROM DAMAGE ALL UTILITIES THAT ARE TO REMAIN IN PLACE. THE CONTRACTOR SHALL CONTACT UTILITY COMPANIES WITH EQUIPMENT THAT ARE WITHIN THE WORK ZONE.

LUMBER:

LUMBER FOR FRAMING AND DECKING SHALL BE PRESSURE TREATED (PT) VISUALLY GRADED SOUTHERN YELLOW PINE, NUMBER 1 OR BETTER, LUMBER SHALL BE KILN DRIED TO A MOISTURE CONTENT OF NO MORE THAN 19% AFTER TREATMENT.

ALL TIMBER DIMENSIONS SHOWN ARE NOMINAL.

MINIMUM DESIGN VALUES FOR VISUALLY GRADED SOUTHERN YELLOW PINE						
SIZE	BENDING Fb (PSI)	TENSION PARALLEL TO GRAIN F_t (PSI)	SHEAR PARALLEL TO GRAIN F_v (PSI)	COMPRESSION PERPENDICULAR TO GRAIN $F_{c\perp}$ (PSI)	COMPRESSION PARALLEL TO GRAIN $F_{c\parallel}$ (PSI)	MODULUS OF ELASTICITY E (PSI)
3"X6"	1300	875	174	480	1550	1400000
2"x8"						
6"X12"	1200	775	175	480	1450	1,400,000
12"x12"	900	575	175	480	1350	1,400,000

NDS TABLE 4B, NO. 1 NON DENSE

LUMBER FOR HAND RAILS, RAIL CAPS, AND RAIL POSTS SHALL BE IPE.

MINIMUM DESIGN VALUES FOR IPE			
SIZE	BENDING Fb (PSI)	CRUSHING STRENGTH (PSI)	MODULUS OF ELASTICITY E (PSI)
ALL	22,500	10,000	2,900,000

IPE TIMBER SHALL BE FINISHED WITH A PRESERVATIVE OIL COATING.

CONCRETE MIXES:

4000 PSI, 1½", 565 CEMENT CONCRETE:.....STUB ABUTMENT FOOTING, STUB ABUTMENT STEM
4000 PSI, ¾", 610 CEMENT CONCRETE:.....STUB ABUTMENT BACKWALL AND PIER FOUNDATIONS

CONSTRUCTION SEQUENCE:

CONTRACTOR SHALL COORDINATE CONSTRUCTION OF THE TIMBER STRUCTURE WITH ADJACENT STRUCTURES TO PROVIDE AN EFFECTIVE CONSTRUCTION SEQUENCE THAT ACCOMMODATES THE SELECTED MEANS AND METHODS FOR EACH OF THE PROPOSED STRUCTURES.

TIMBER PIER COLUMNS:

TIMBER PIER COLUMNS SHALL BE SOUTHERN YELLOW PINE, CLEAN-PEELED AND TREATED WITH CCA IN ACCORDANCE WITH AWPA STD. P5 FOR CCA-TYPE C TREATMENT. THE RETENTION OF PRESERVATIVE SHALL BE STD. U1 TO THE REQUIREMENTS OF USE CATEGORY UC4B.

SEISMIC DESIGN CRITERIA	
DESIGN RETURN PERIOD:	1000
DESIGN SPECTRA	
As	0.078
SDs	0.18
SD1	0.068
SITE CLASS	C
SEISMIC DESIGN CATEGORY (SDC)	A

ESTIMATED QUANTITIES
(NOT GUARANTEED)

ITEM DESCRIPTION	QUANTITY	UNITS
BRIDGE EXCAVATION.....	30	CY
GRAVEL BORROW FOR BRIDGE FOUNDATIONS.....	10	CY
GRAVEL BORROW FOR BACKFILLING STRUCTURES AND PIPES.....	30	CY
CRUSHED STONE FOR BRIDGE FOUNDATIONS.....	5	TON
TIMBER PEDESTRIAN BRIDGE NO. L-04-XXX (XXX).....	1	LS

10/28/2022	FIRST STRUCTURAL SUBMITTAL
DATE	DESCRIPTION
THIS SHEET IS APPROVED FOR CONSTRUCTION BY MASSDOT AUTHORIZED SIGNATORY: _____ STATE BRIDGE ENGINEER	
USE ONLY PRINTS OF LATEST DATE	

FOR PERMITTING PURPOSES - NOT FOR CONSTRUCTION

608930_BR2(L04XXX).DWG Plotted on 28-Oct-2022 2:51 PM

Proposal No. 608930-128034

A00869 - 176

October 28, 2022
First Structural Submittal (S1)

LAWRENCE
ACCESS RAMP TO LOWELL STREET

STATE	FED. AID PROJ. NO.	SHEET NO.	TOTAL SHEETS
MA	-	158	225
PROJECT FILE NO.	608930		

FRAMING PLAN AND ELEVATION

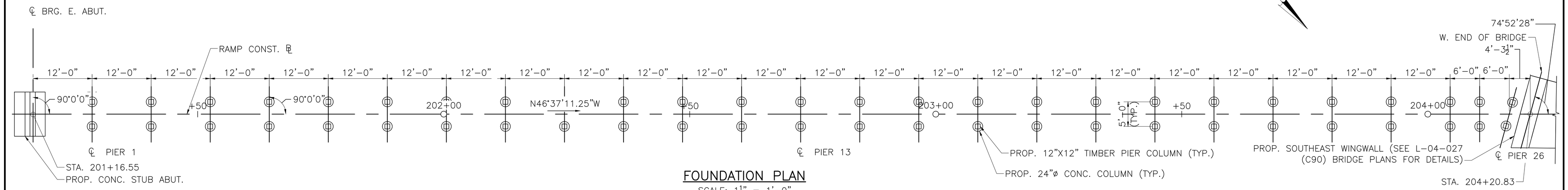

FOUNDATION PLAN
SCALE: 1¼" = 1'-0"

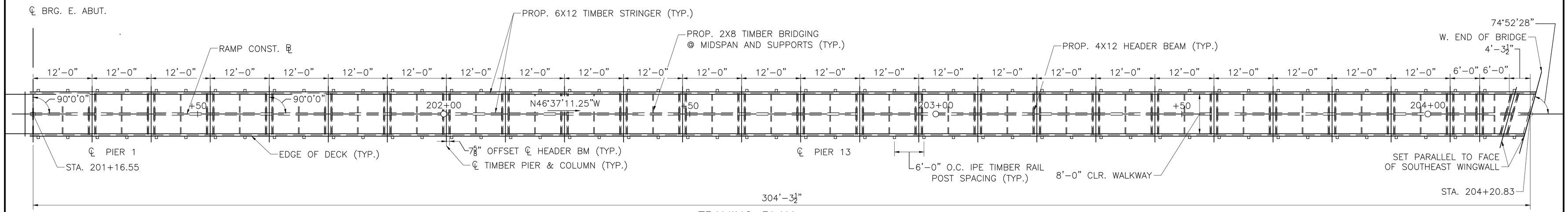

FRAMING PLAN
SCALE: 1¼" = 1'-0"

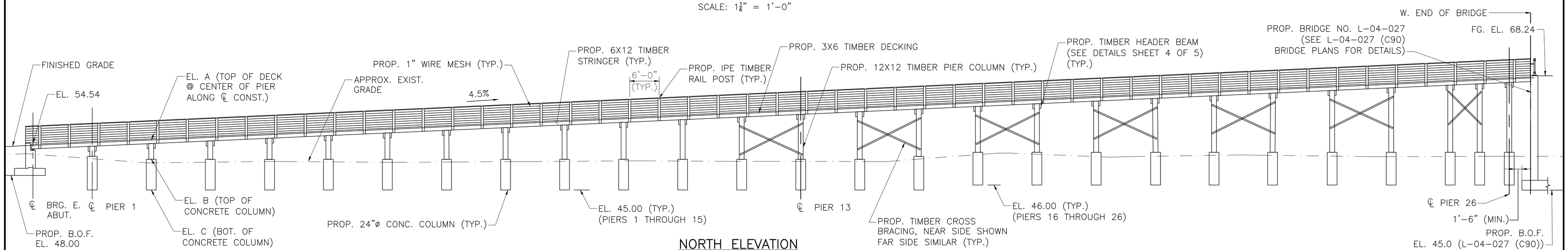

NORTH ELEVATION
SCALE: 1¼" = 1'-0"

LOCATION:	PIER 1	PIER 2	PIER 3	PIER 4	PIER 5	PIER 6	PIER 7	PIER 8	PIER 9	PIER 10	PIER 11	PIER 12	PIER 13	PIER 14	PIER 15	PIER 16	PIER 17	PIER 18	PIER 19	PIER 20	PIER 21	PIER 22	PIER 23	PIER 24	PIER 25	PIER 26
EL. A	55.03	55.57	56.11	56.65	57.19	57.73	58.27	58.81	59.35	59.89	60.43	60.97	61.51	62.04	62.58	63.12	63.66	64.20	64.74	65.28	65.82	66.36	66.90	67.44	67.71	67.98
EL. B	51.75	51.25	51.25	51.25	51.25	51.25	51.25	51.25	51.25	51.25	51.25	51.25	51.25	51.25	51.75	52.75	52.75	52.75	52.75	52.75	52.75	52.75	52.75	52.75	52.75	52.75
EL. C	45.00	45.00	45.00	45.00	45.00	45.00	45.00	45.00	45.00	45.00	45.00	45.00	45.00	45.00	45.00	46.00	46.00	46.00	46.00	46.00	46.00	46.00	46.00	46.00	46.00	46.00
STATION	201+28.55	201+40.55	201+52.55	201+64.55	201+76.55	201+88.55	202+00.55	202+12.55	202+24.55	202+36.55	202+48.55	202+60.55	202+72.55	202+84.55	202+96.55	203+08.55	203+20.55	203+32.55	203+44.55	203+56.55	203+68.55	203+80.55	203+92.55	204+04.55	204+10.55	(L) 204+17.22 (R) 204+15.90
OFFSET (L&R)	2.50	2.50	2.50	2.50	2.50	2.50	2.50	2.50	2.50	2.50	2.50	2.50	2.50	2.50	2.50	2.50	2.50	2.50	2.50	2.50	2.50	2.50	2.50	2.50	2.50	2.41

ABUTMENT NOTES:

1. THE FACTORED BEARING PRESSURE = 1.41 KSF AS PER AASHTO LFRD BRIDGE DESIGN SPECIFICATION STRENGTH 1 LOAD COMBINATION. FACTORED BEARING RESISTANCE = 8.8 KSF. FACTORED BEARING RESISTANCE IS THE PRODUCT OF THE NOMINAL BEARING RESISTANCE AND A RESISTANCE FACTOR OF 0.45

10/28/2022	FIRST STRUCTURAL SUBMITTAL
DATE	DESCRIPTION

THIS SHEET IS APPROVED FOR CONSTRUCTION BY MASSDOT
AUTHORIZED SIGNATORY: STATE BRIDGE ENGINEER
USE ONLY PRINTS OF LATEST DATE

SHEET 3 OF 5 SHEETS BRIDGE NO. L-04-XXX (XXX)

FOR PERMITTING PURPOSES - NOT FOR CONSTRUCTION

608930_BR3(L04XXX).DWG Plotted on 28-Oct-2022 2:51 PM
Proposal No. 608930-128034
October 28, 2022
First Structural Submittal (S1)
A00869 - 177

608930_BR4-6(L04XXX).DWG Plotted on 28-Oct-2022 2:51 PM

LAWRENCE
ACCESS RAMP TO LOWELL STREET

STATE	FED. AID PROJ. NO.	SHEET NO.	TOTAL SHEETS
MA	-	159	225
PROJECT FILE NO.	608930		

SUBSTRUCTURE DETAILS

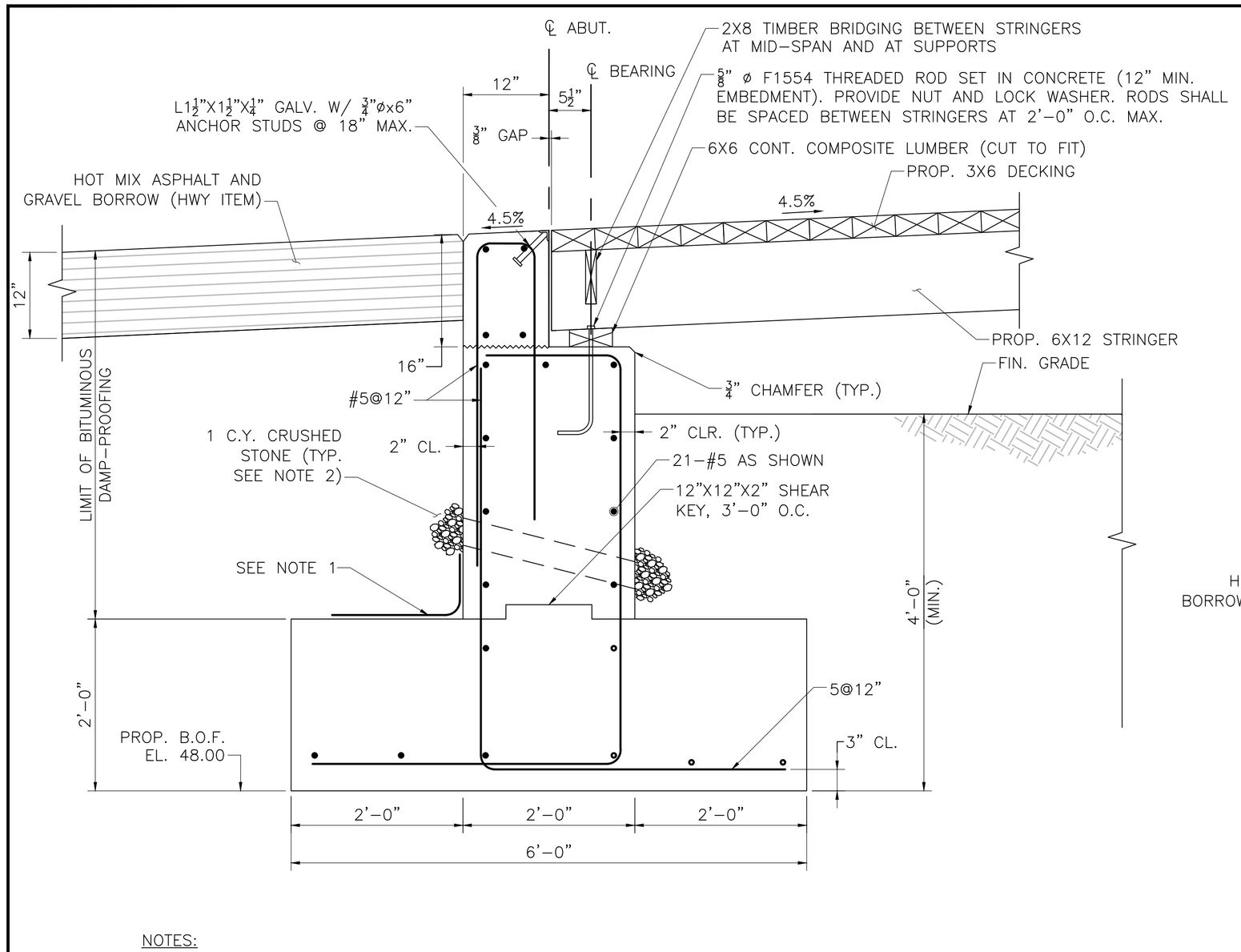

NOTES:

1. MEMBRANE WATERPROOFING AND 8"X16"X2", 4000 PSI, ¾ IN., 610 CEMENT CONCRETE BLOCKS LAID IN MORTAR OR OTHER WATERPROOFING PROTECTIVE COURSE, MIN. 2" THICK AS SPECIFIED IN MASSDOT STANDARD SPECIFICATIONS.
2. 4"ø WEEP HOLES EVENLY SPACED ALONG ABUTMENT (JUST ABOVE PROTECTIVE COURSE.) PROVIDE 1 CUBIC YARD OF CRUSHED STONE AT EACH END OF WEEP HOLE.

STUB ABUTMENT SECTION

SCALE: 1'-0" = 1'-0"

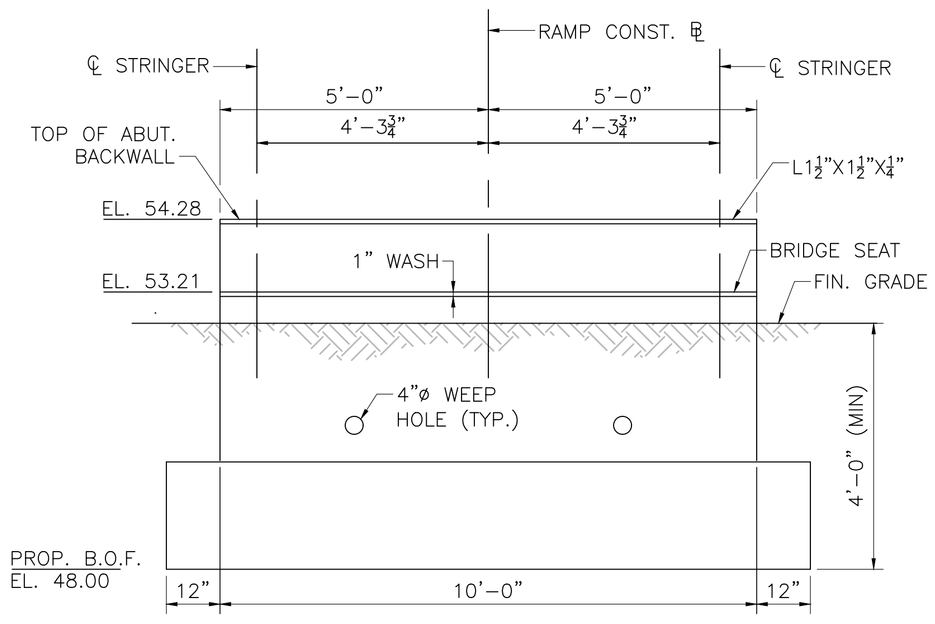

ELEVATION – EAST ABUTMENT

SCALE: ½" = 1'-0"

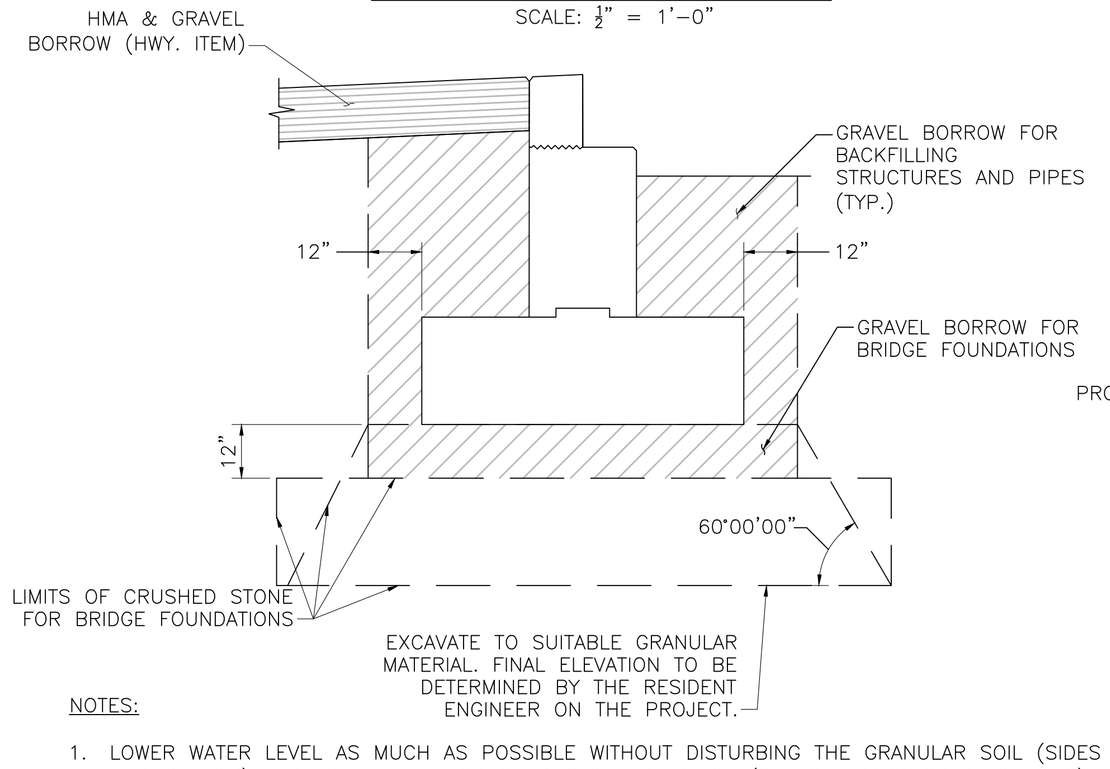

NOTES:

1. LOWER WATER LEVEL AS MUCH AS POSSIBLE WITHOUT DISTURBING THE GRANULAR SOIL (SIDES AND BOTTOM) AND TIGHTEN THE CRUSHED STONE IN PLACE (SEE STANDARD SPECIFICATIONS).
2. GRAVEL BORROW FOR BRIDGE FOUNDATIONS MUST BE INSTALLED IN THE DRY. USE WATER CONTROL WHERE REQUIRED.

LIMITS AND PAYMENT LIMITS OF GRAVEL BORROWS

SCALE: ½" = 1'-0"

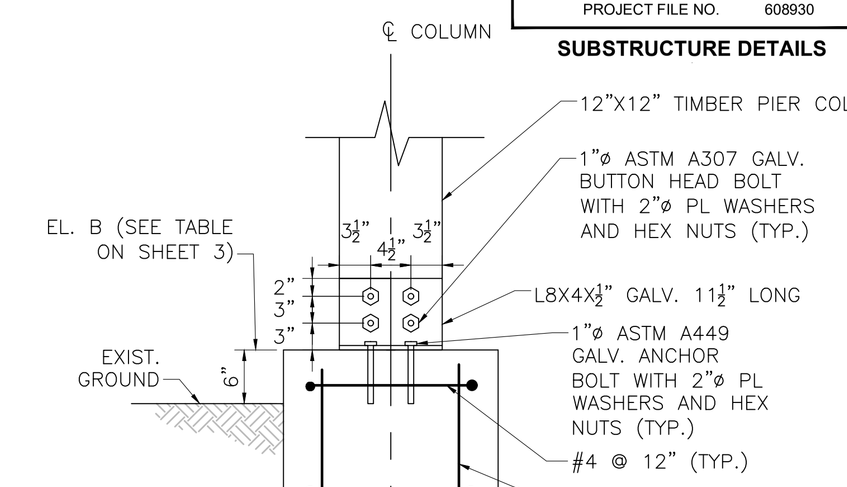

NOTE:

CONCRETE COLUMN SHALL BE 4000 PSI, ¾", 610 CEMENT CONCRETE

CONCRETE COLUMN CONNECTIONS

SCALE: 1" = 1'-0"

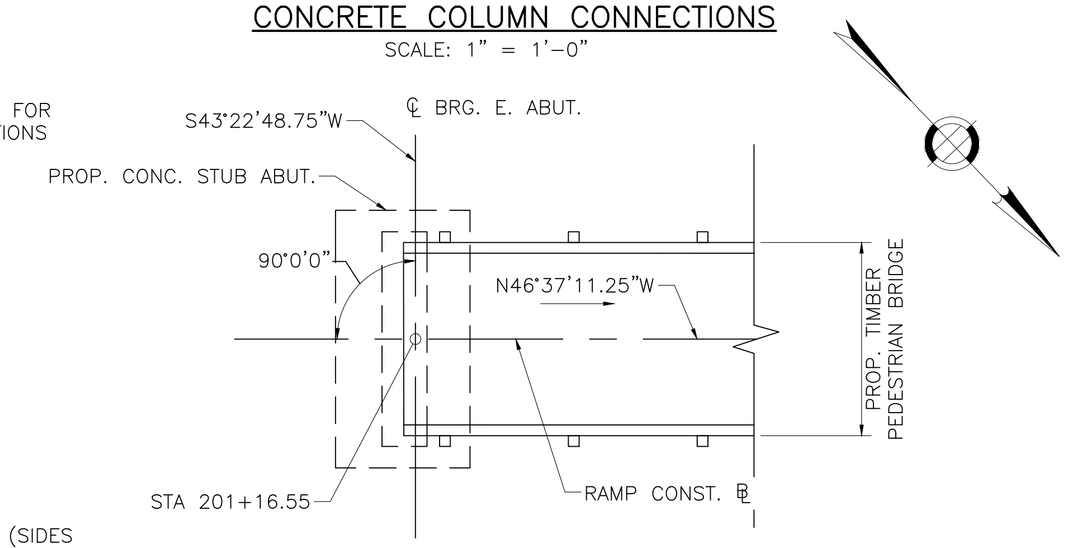

PART PLAN – EAST ABUTMENT

SCALE: 1"=5'

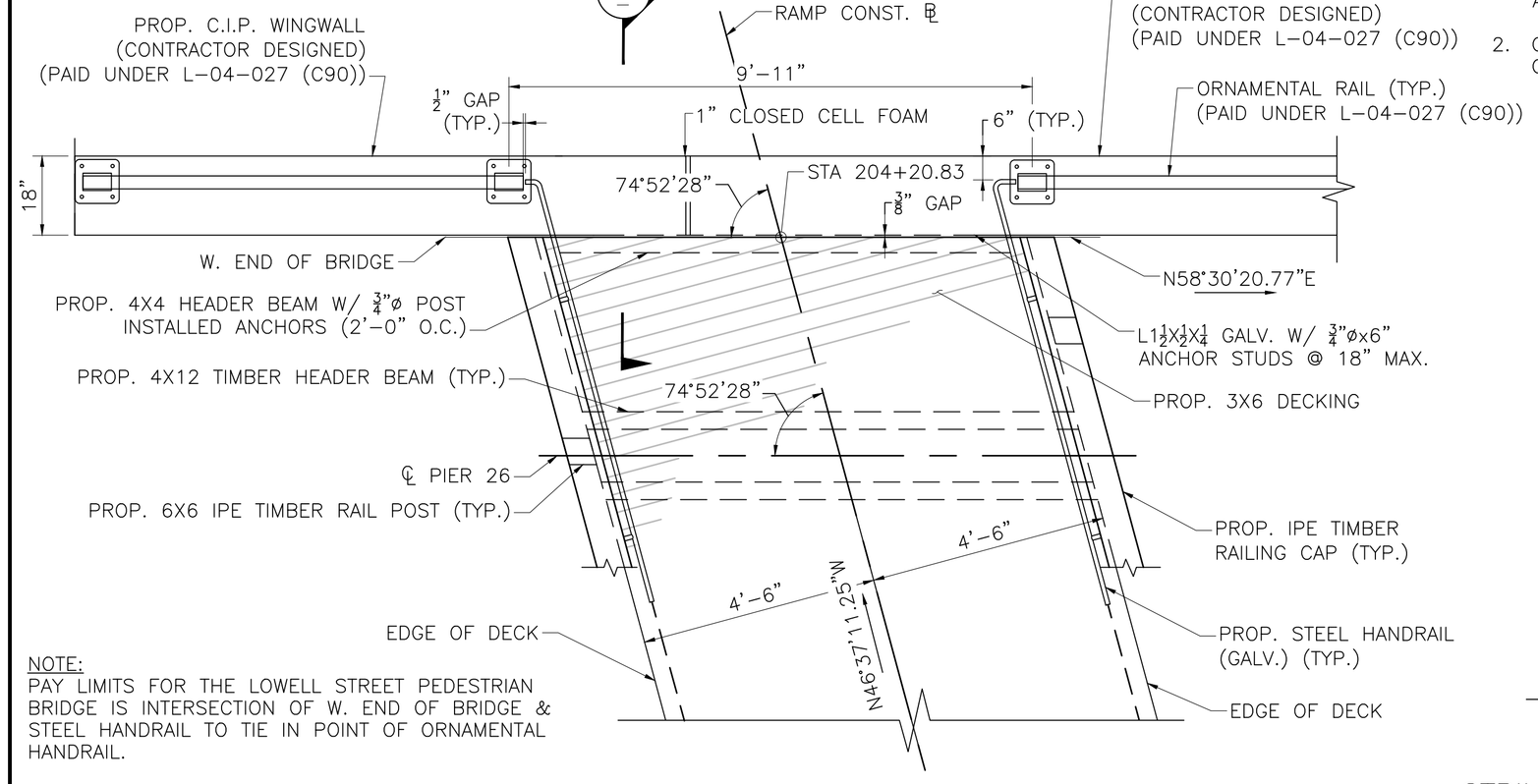

NOTE:
PAY LIMITS FOR THE LOWELL STREET PEDESTRIAN BRIDGE IS INTERSECTION OF W. END OF BRIDGE & STEEL HANDRAIL TO TIE IN POINT OF ORNAMENTAL HANDRAIL.

PART PLAN – INGRESS/REGRESS SOUTHEAST WINGWALL

SCALE: ½" = 1'-0"

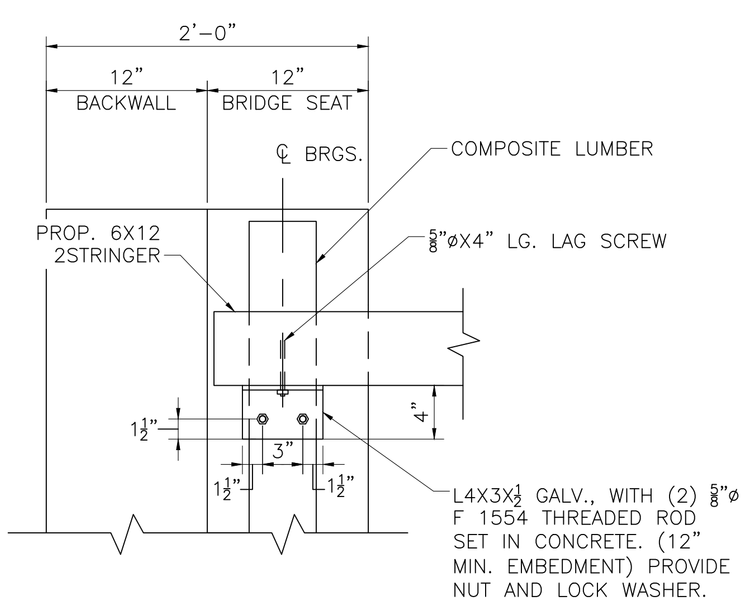

STRINGER CONNECTION DETAIL AT ABUTMENT

SCALE 1½" = 1'-0"

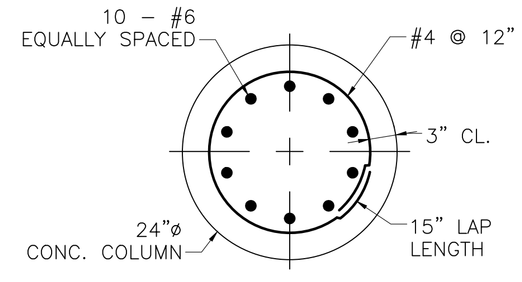

SECTION 2

SCALE: 1" = 1'-0"

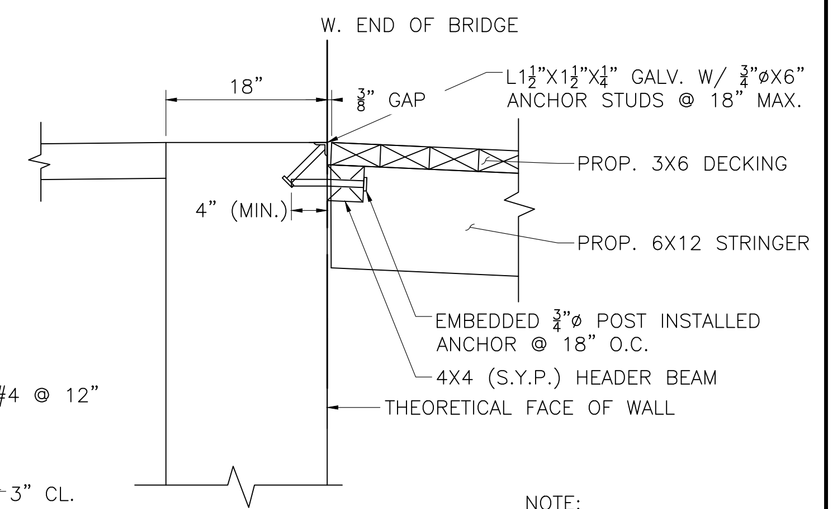

NOTE:
ANCHOR TO BE OFFSET FROM NOSING STUD.

SECTION 1

SCALE: 1" = 1'-0"

10/28/2022	FIRST STRUCTURAL SUBMITTAL
DATE	DESCRIPTION

THIS SHEET IS APPROVED FOR CONSTRUCTION BY MASSDOT
AUTHORIZED SIGNATORY: STATE BRIDGE ENGINEER
USE ONLY PRINTS OF LATEST DATE

First Structural Submittal (S1) October 28, 2022

FOR PERMITTING PURPOSES - NOT FOR CONSTRUCTION

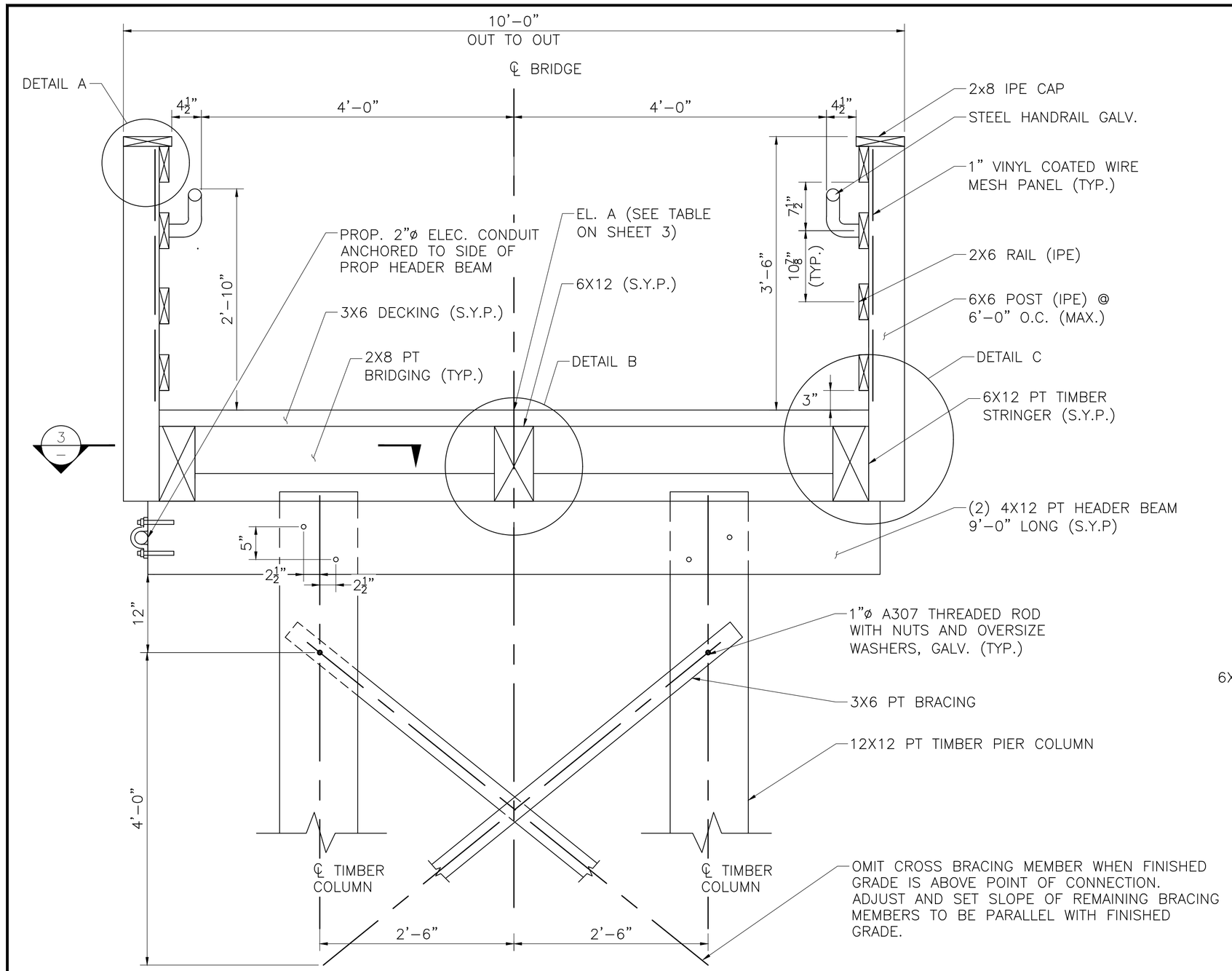

TYPICAL TRANSVERSE SECTION
SCALE: 1" = 1'–0"

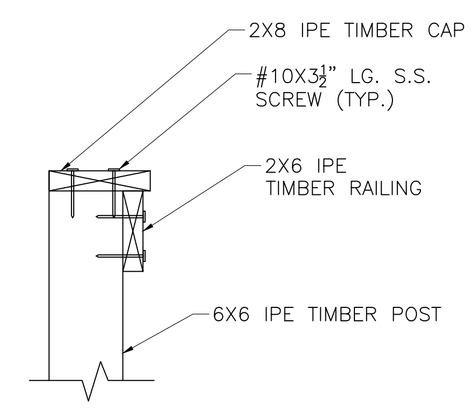

DETAIL A
SCALE 1½" = 1'–0"

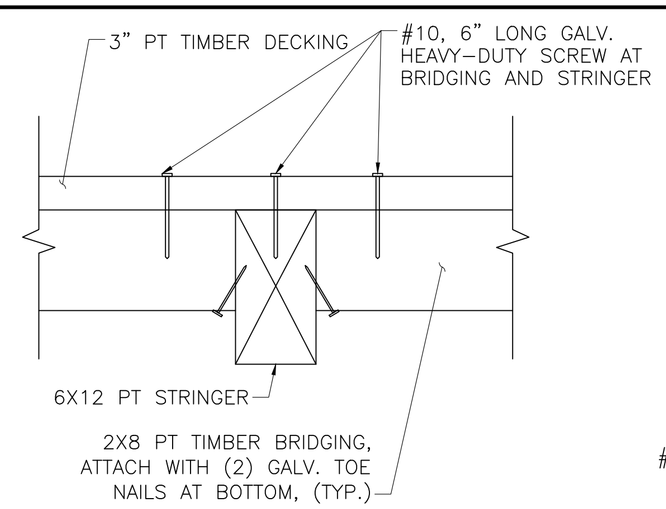

NOTES:

1. BRIDGING TO BE ADDED AT MIDSPAN AND SUPPORTS
2. BRIDGING TO BE SHIFTED TO ALLOW FOR POST CONNECTION DETAIL, AS REQ'D.

DETAIL B
SCALE: 1½" = 1'–0"

LAWRENCE
ACCESS RAMP TO LOWELL STREET

STATE	FED. AID PROJ. NO.	SHEET NO.	TOTAL SHEETS
MA	-	160	225
PROJECT FILE NO.	608930		

SUPERSTRUCTURE DETAILS

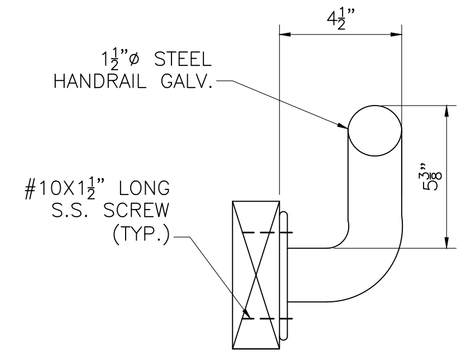

HANDRAIL DETAIL
SCALE: 3" = 1'–0"

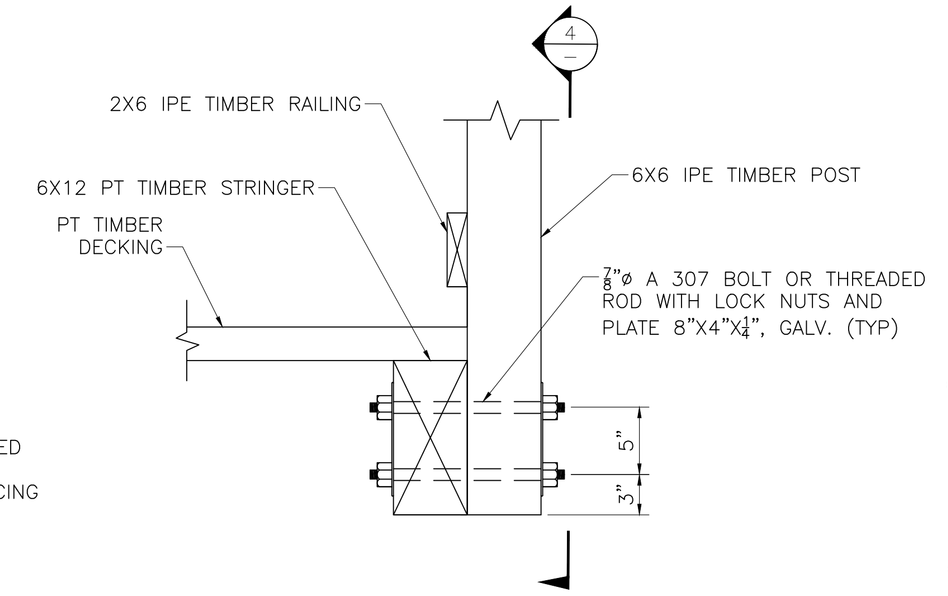

DETAIL C
SCALE: 1½" = 1'–0"

ADJUST AND SET SLOPE OF LONGITUDINAL CROSS BRACING MEMBERS TO AVOID ANY INTERFERENCE WITH TIMBER PIER COLUMN CONNECTIONS AND/OR TRANSVERSE CROSS BRACING CONNECTIONS.

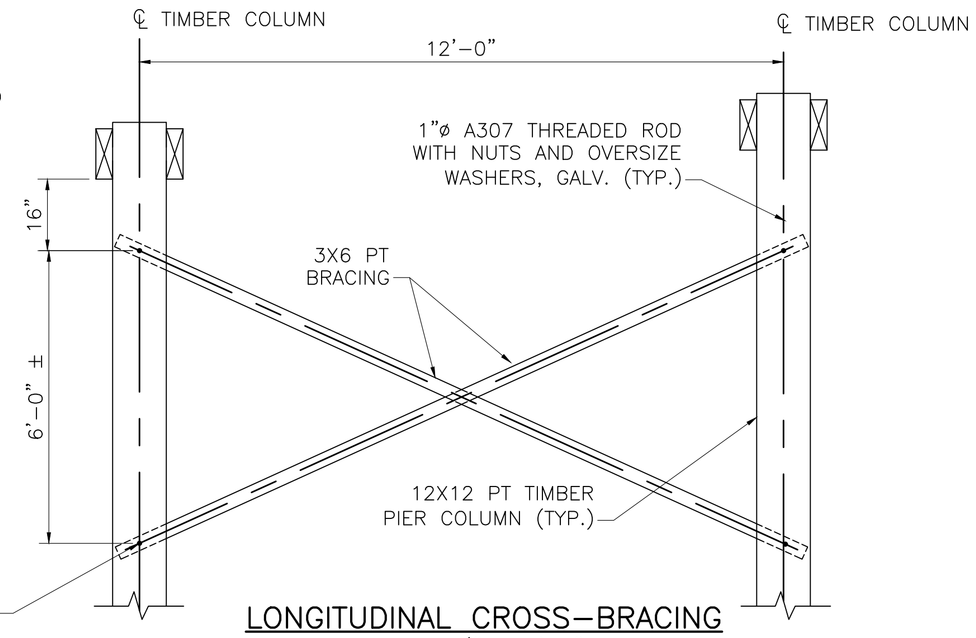

LONGITUDINAL CROSS–BRACING
SCALE: ½" = 1'–0"

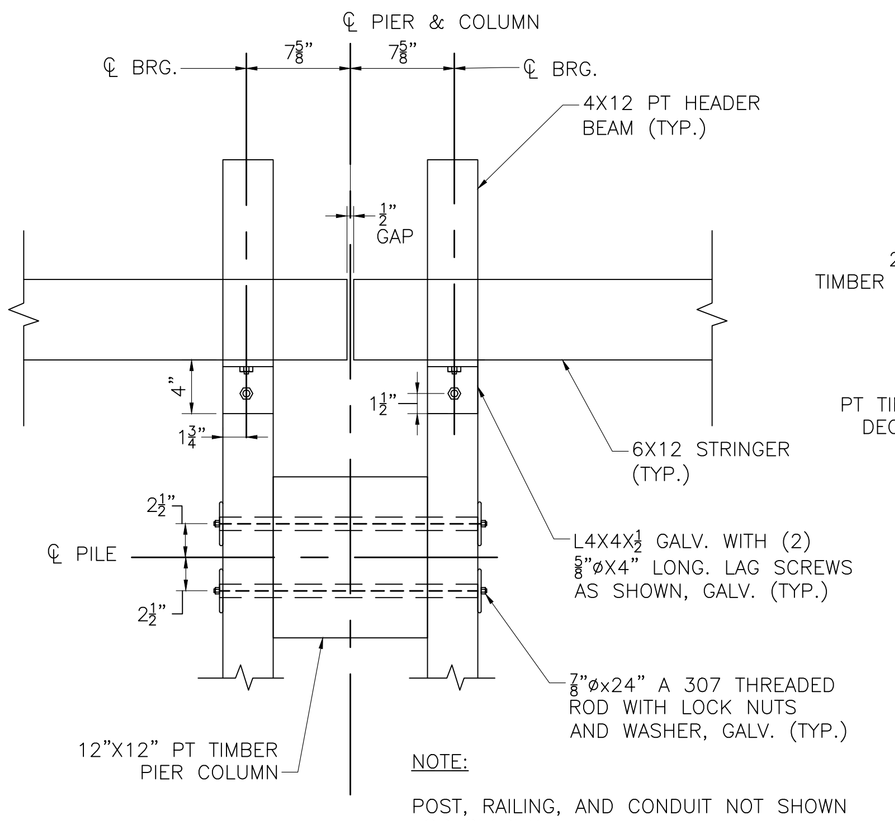

NOTE:

POST, RAILING, AND CONDUIT NOT SHOWN FOR CLARITY

SECTION 3
SCALE: 1½" = 1'–0"

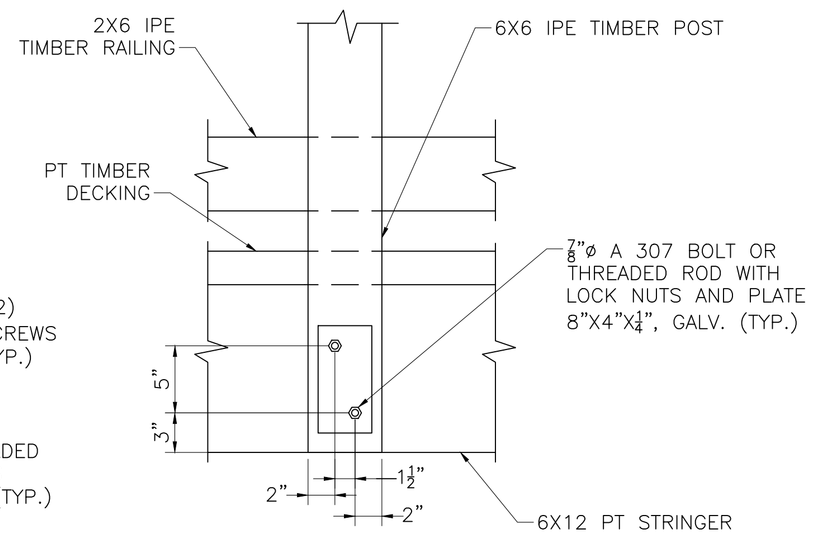

SECTION 4
SCALE 1½" = 1'–0"

NOTES:

1. ALL RAIL POSTS, RAIL CAPS, HORIZONTAL RAILS SHALL BE IPE TIMBER AS SPECIFIED.
2. ALL HORIZONTAL IPE TIMBER RAILS SHALL BE FASTENED TO IPE TIMBER POSTS WITH (2) #10X3½" LG. STAINLESS STEEL SCREWS IN PRE–DRILLED HOLES.
3. ALL SCREWS, WHERE INDICATED OR AS REQUIRED, SHALL BE STAINLESS STEEL COUNTERSUNK FLAT HEAD, TWO (2) PER CONNECTED MEMBER, MINIMUM, UNLESS OTHERWISE NOTED. MIN. SIZE OF WOOD SCREW SHALL BE #10 WITH LENGTH TO SUIT.
4. TIMBER DECKING TO BE FASTENED TO EACH STINGER WITH (2) #10X6" LONG, GALV. HEAVY–DUTY SCREW AT 6X12 STRINGER.
5. ALL TIMBER DIMENSIONS ARE NOMINAL.
6. S.Y.P. DENOTES SOUTHERN PINE.
7. PT DENOTES PRESSURE TREATED.
8. ALL STRUCTURAL STEEL, UNLESS OTHERWISE NOTED, SHALL CONFORM TO THE REQUIREMENTS OF AASHTO M270, GRADE 36, HOT–DIP GALV.
9. STEEL HANDRAIL SHALL BE ASTM A 53 PIPE, HOT–DIP GALV., AND PAINTED BLACK (FEDERAL STD. 595B, COLOR NO. 17038).
10. VINYL COATED WELDED WIRE STEEL MESH PANELS SHALL BE FASTENED TO THE RAIL POSTS.
11. STEEL MESH SHALL BE EITHER ZINC OR ALUMINUM COATED. THE VINYL COATING SHALL BE FUSION OR EXTRUDED BONDED. COLOR OF COATING SHALL BE BLACK (FEDERAL STD 595B, COLOR NO. 17038).

DATE	DESCRIPTION
10/28/2022	FIRST STRUCTURAL SUBMITTAL

THIS SHEET IS APPROVED FOR CONSTRUCTION BY MASSDOT
AUTHORIZED SIGNATORY: _____ STATE BRIDGE ENGINEER
USE ONLY PRINTS OF LATEST DATE

608930_BR4-6(L04XXX).DWG Plotted on 28-Oct-2022 2:51 PM
Proposal No. 608930-128034
First Structural Submittal (S1) October 28, 2022
A00869 - 179
FOR PERMITTING PURPOSES - NOT FOR CONSTRUCTION

LAWRENCE
LMRC RAIL TRAIL

STATE	FED. AID PROJ. NO.	SHEET NO.	TOTAL SHEETS
MA	-	161	225
PROJECT FILE NO.	608903		

LMRC RAIL TRAIL
CROSS SECTIONS - 1 OF 65

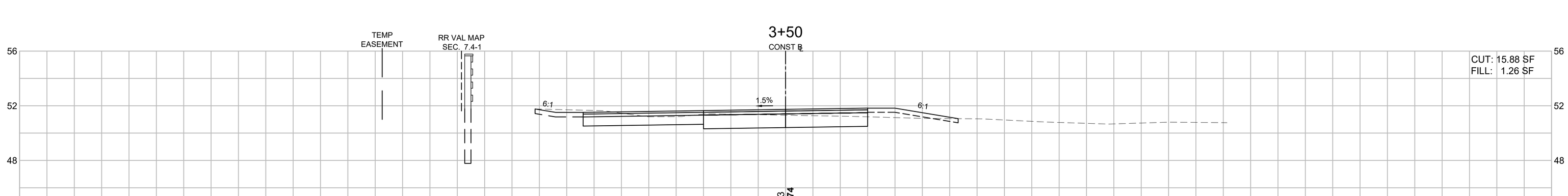

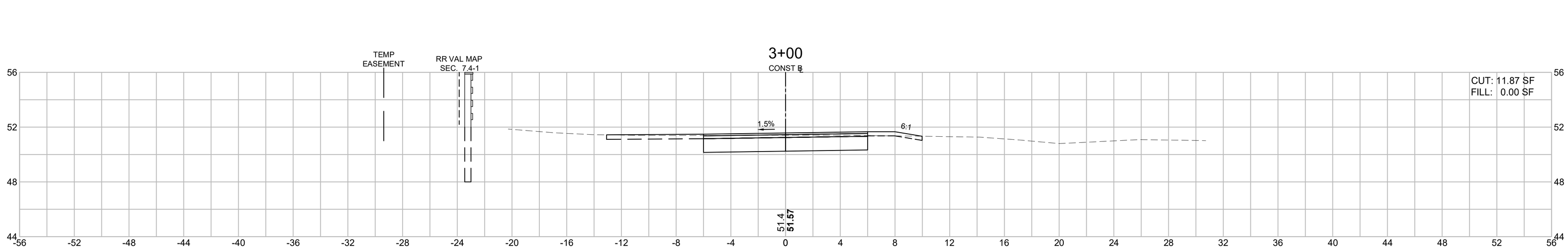

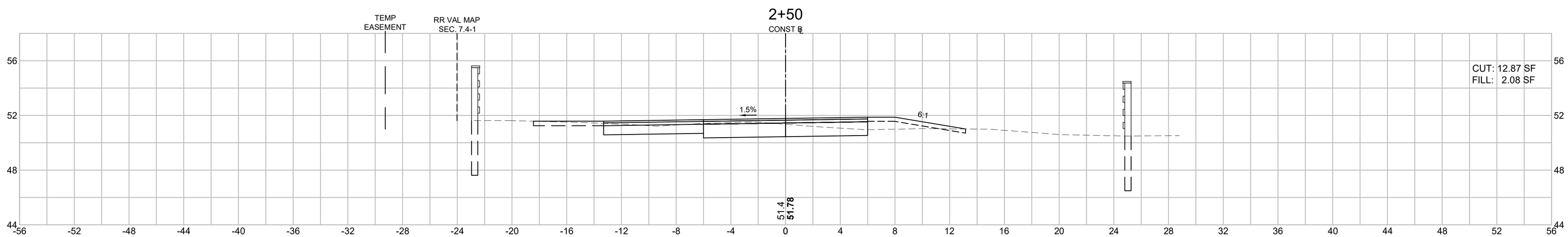

SEE BRIDGE PLANS FOR TYPICAL SECTIONS AT STA 1+50 & STA 2+00

HOR. SCALE IN FEET
4 0 4 8
4 0 4 8
VER. SCALE IN FEET

FOR PERMITTING PURPOSES - NOT FOR CONSTRUCTION

608930_HD11(CROSS SECTIONS).DWG Plotted on 28-Oct-2022 9:16 AM
Proposal No. 608930-128034
A00869 - 180

LAWRENCE
LMRC RAIL TRAIL

STATE	FED. AID PROJ. NO.	SHEET NO.	TOTAL SHEETS
MA	-	162	225
PROJECT FILE NO.	608903		

LMRC RAIL TRAIL
CROSS SECTIONS - 2 OF 65

SEE BRIDGE PLANS FOR TYPICAL SECTIONS AT STA 5+50 TO STA 10+00

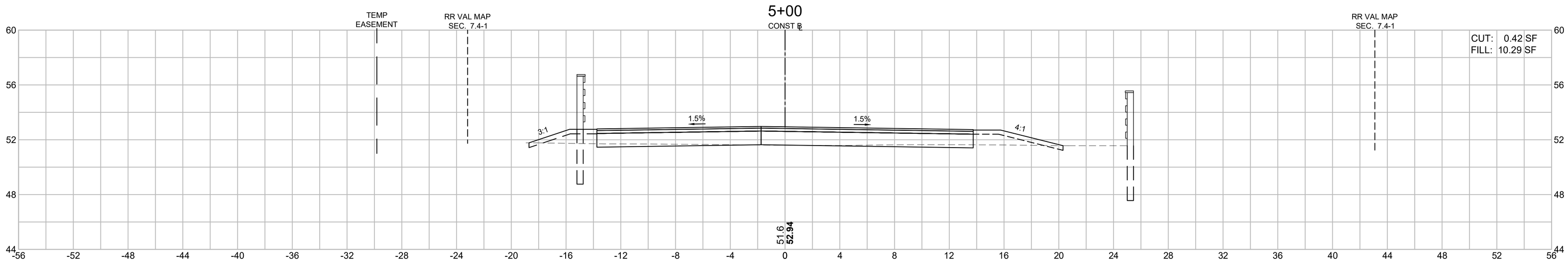

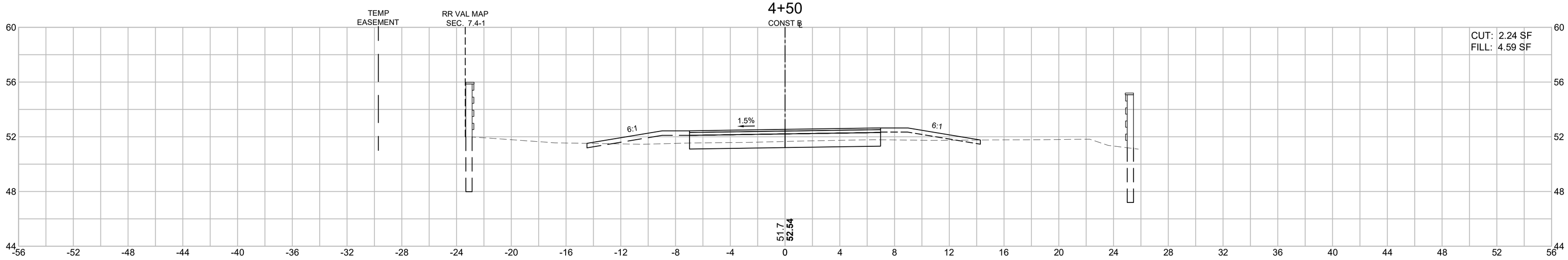

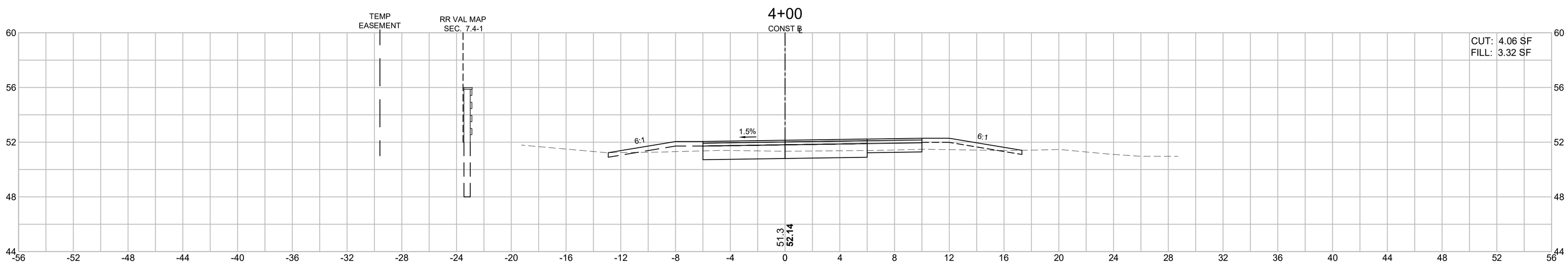

HOR. SCALE IN FEET
4 0 4 8
4 0 4 8
VER. SCALE IN FEET

FOR PERMITTING PURPOSES - NOT FOR CONSTRUCTION

608930_HD11(CROSS SECTIONS).DWG Plotted on 28-Oct-2022 9:17 AM

Proposal No. 608930-128034

A00869 - 181

FOR PERMITTING PURPOSES - NOT FOR CONSTRUCTION

HOR. SCALE IN FEET
4 0 4 8

VER. SCALE IN FEET
4 0 4 8

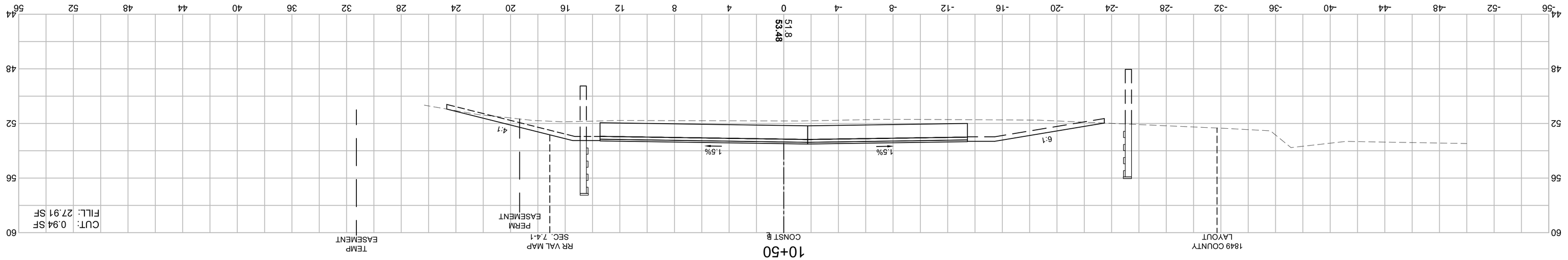

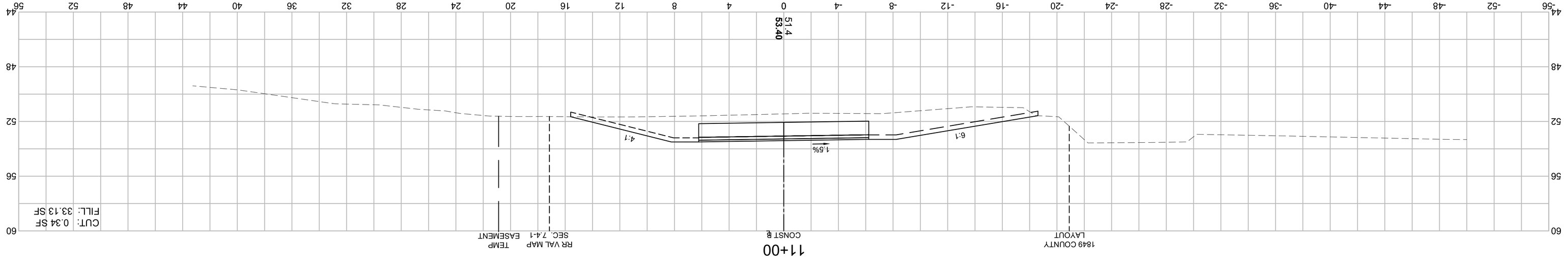

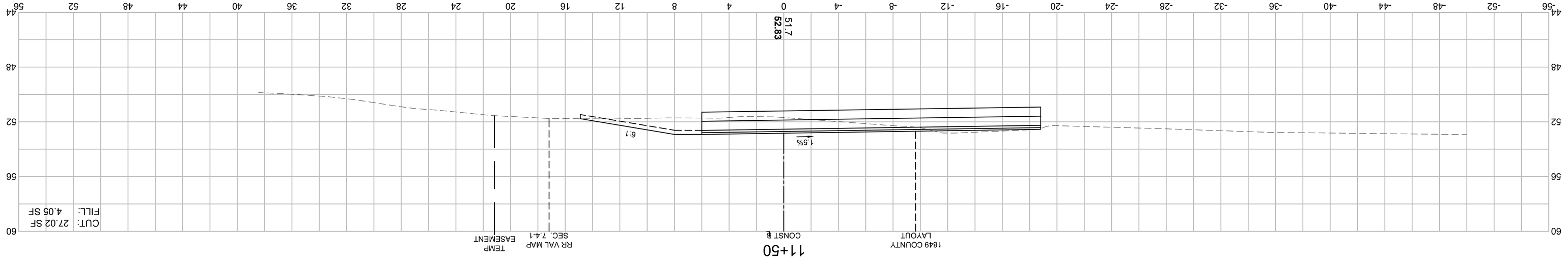

LAWRENCE
LMRC RAIL TRAIL

STATE	FED. AID PROJ. NO.	SHEET NO.	TOTAL SHEETS
MA	-	163	225
PROJECT FILE NO. 608903			

LMRC RAIL TRAIL
CROSS SECTIONS - 3 OF 65

Proposal No. 608930-128034

608930_HD11(CROSS SECTIONS).DWG Plotted on 28-Oct-2022 9:17 AM

A00869 - 182

LAWRENCE
LMRC RAIL TRAIL

STATE	FED. AID PROJ. NO.	SHEET NO.	TOTAL SHEETS
MA	-	164	225
PROJECT FILE NO.	608903		

LMRC RAIL TRAIL
CROSS SECTIONS - 4 OF 65

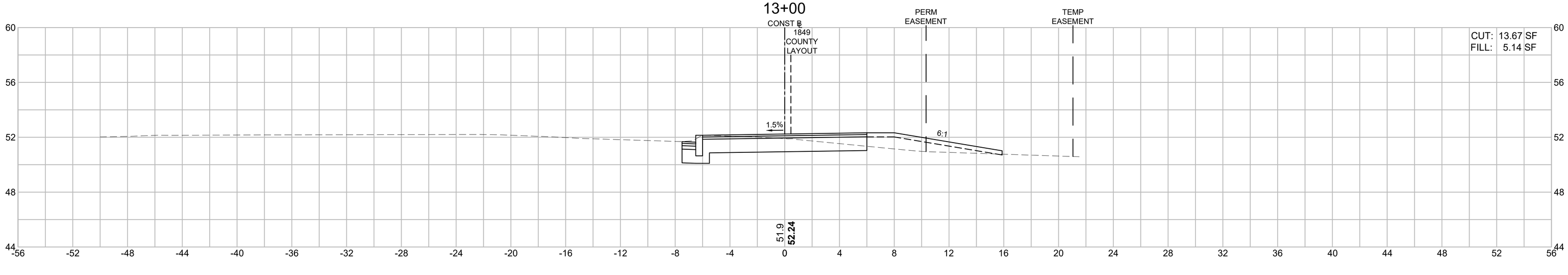

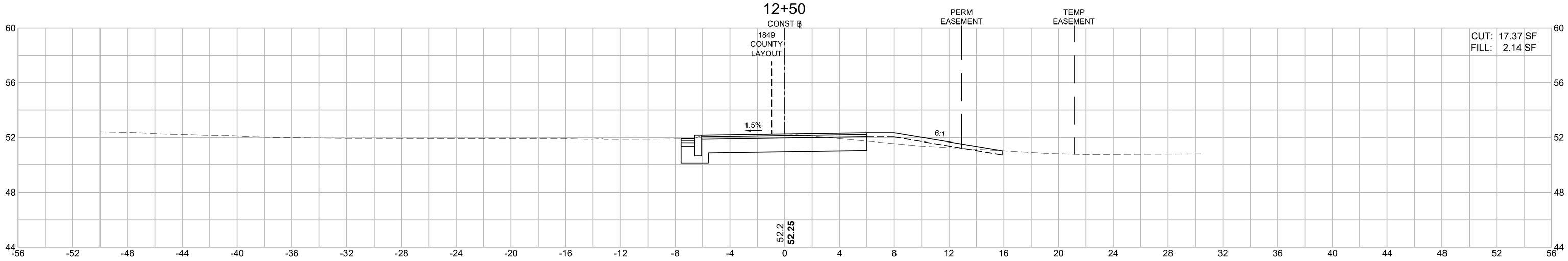

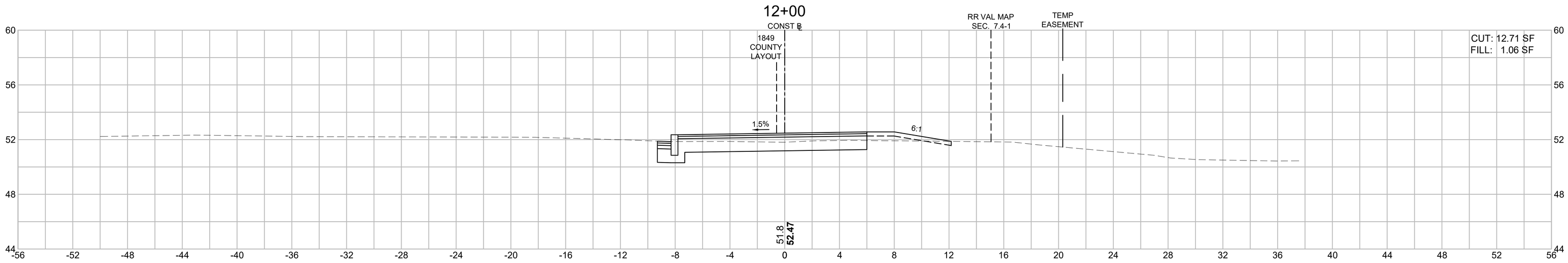

HOR. SCALE IN FEET
4 0 4 8
4 0 4 8
VER. SCALE IN FEET

FOR PERMITTING PURPOSES - NOT FOR CONSTRUCTION

608930_HD11(CROSS SECTIONS).DWG Plotted on 28-Oct-2022 9:17 AM

Proposal No. 608930-128034

A00869 - 183

LAWRENCE
LMRC RAIL TRAIL

STATE	FED. AID PROJ. NO.	SHEET NO.	TOTAL SHEETS
MA	-	165	225
PROJECT FILE NO.	608903		

LMRC RAIL TRAIL
CROSS SECTIONS - 5 OF 65

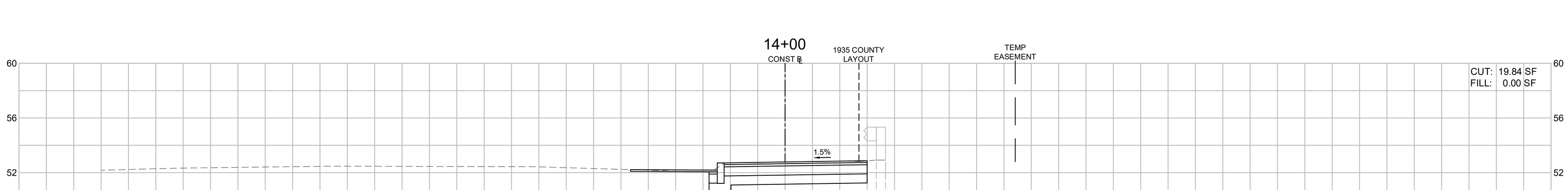

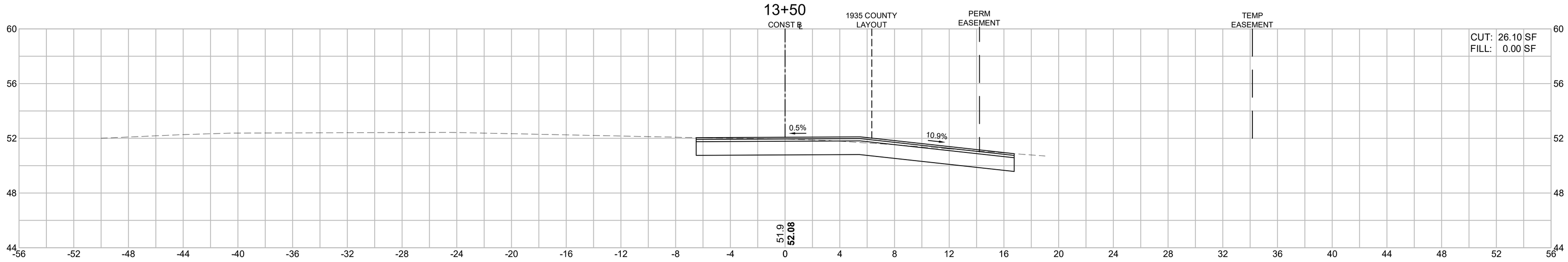

HOR. SCALE IN FEET
4 0 4 8
4 0 4 8
VER. SCALE IN FEET

FOR PERMITTING PURPOSES - NOT FOR CONSTRUCTION

608930_HD11(CROSS SECTIONS).DWG Plotted on 28-Oct-2022 9:17 AM

Proposal No. 608930-128034

A00869 - 184

LAWRENCE
LMRC RAIL TRAIL

STATE	FED. AID PROJ. NO.	SHEET NO.	TOTAL SHEETS
MA	-	166	225
PROJECT FILE NO.	608903		

LMRC RAIL TRAIL
CROSS SECTIONS - 6 OF 65

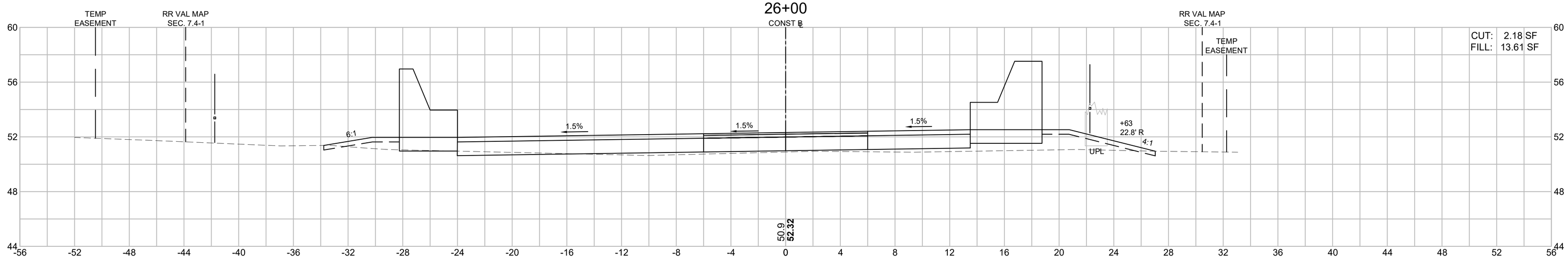

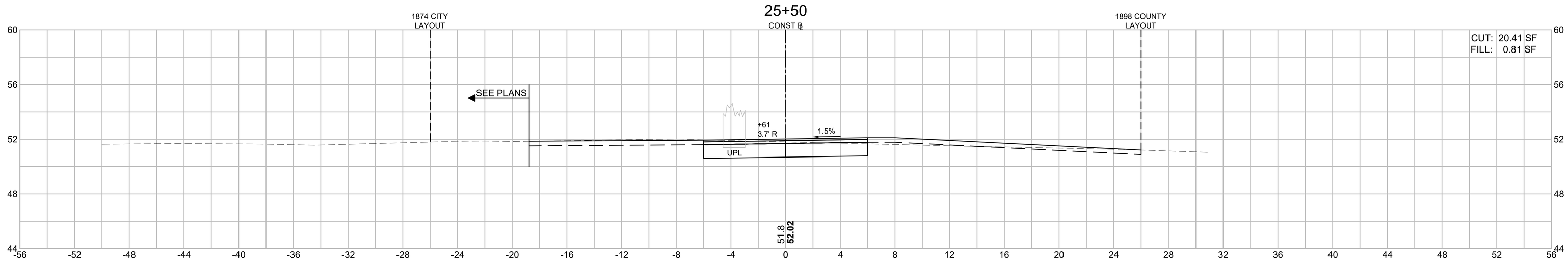

HOR. SCALE IN FEET
4 0 4 8
4 0 4 8
VER. SCALE IN FEET

FOR PERMITTING PURPOSES - NOT FOR CONSTRUCTION

608930_HD11(CROSS SECTIONS).DWG Plotted on 28-Oct-2022 9:18 AM

Proposal No. 608930-128034

A00869 - 185

LAWRENCE
LMRC RAIL TRAIL

STATE	FED. AID PROJ. NO.	SHEET NO.	TOTAL SHEETS
MA	-	167	225
PROJECT FILE NO.	608903		

LMRC RAIL TRAIL
CROSS SECTIONS - 7 OF 65

608930_HD11(CROSS SECTIONS).DWG Plotted on 28-Oct-2022 9:18 AM

Proposal No. 608930-128034

A00869 - 186

27+50

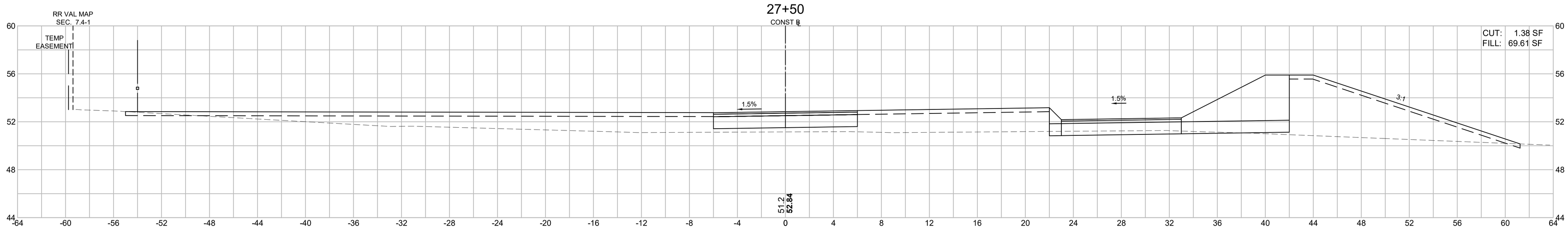

27+00

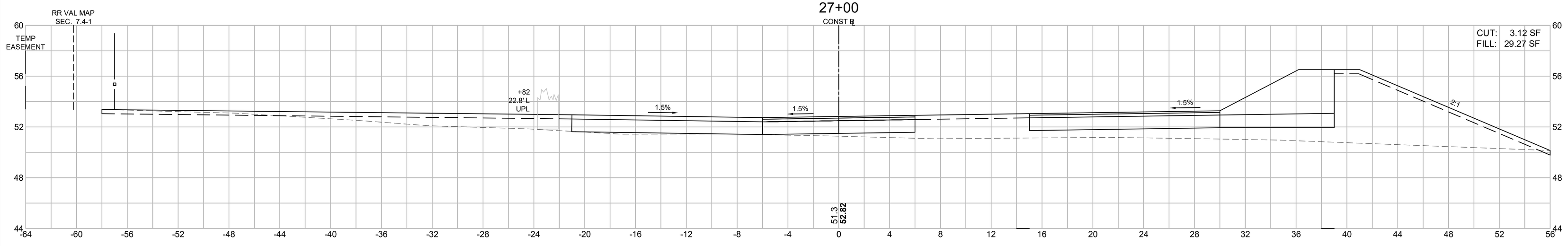

26+50

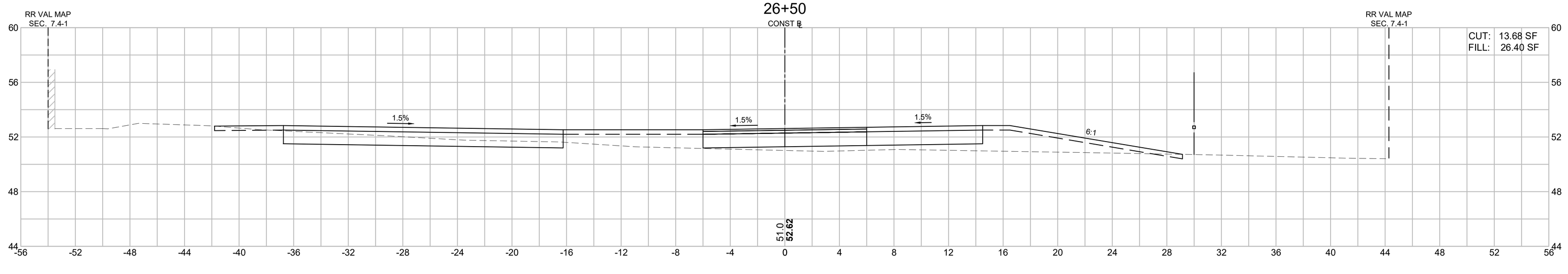

HOR. SCALE IN FEET
4 0 4 8
4 0 4 8
VER. SCALE IN FEET

FOR PERMITTING PURPOSES - NOT FOR CONSTRUCTION

LAWRENCE
LMRC RAIL TRAIL

STATE	FED. AID PROJ. NO.	SHEET NO.	TOTAL SHEETS
MA	-	168	225
PROJECT FILE NO.	608903		

LMRC RAIL TRAIL
CROSS SECTIONS - 8 OF 65

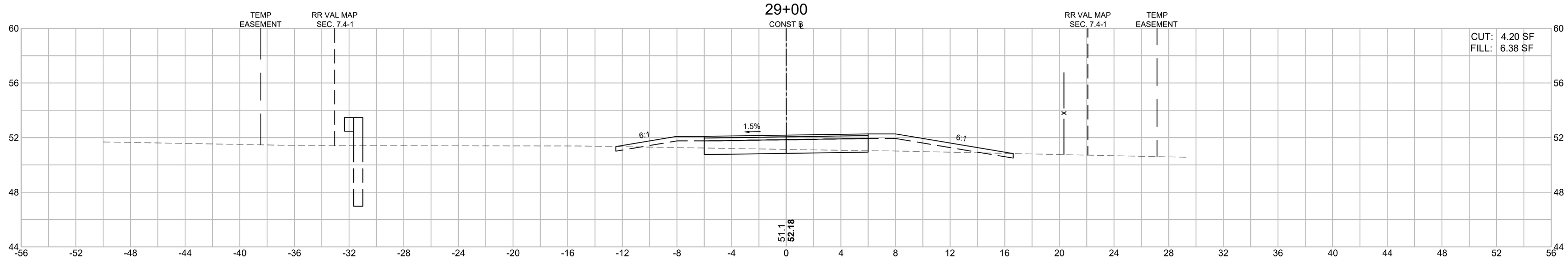

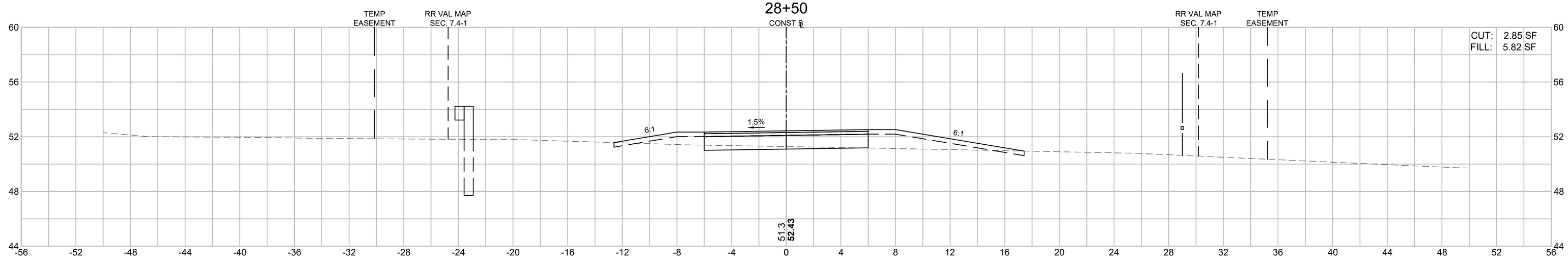

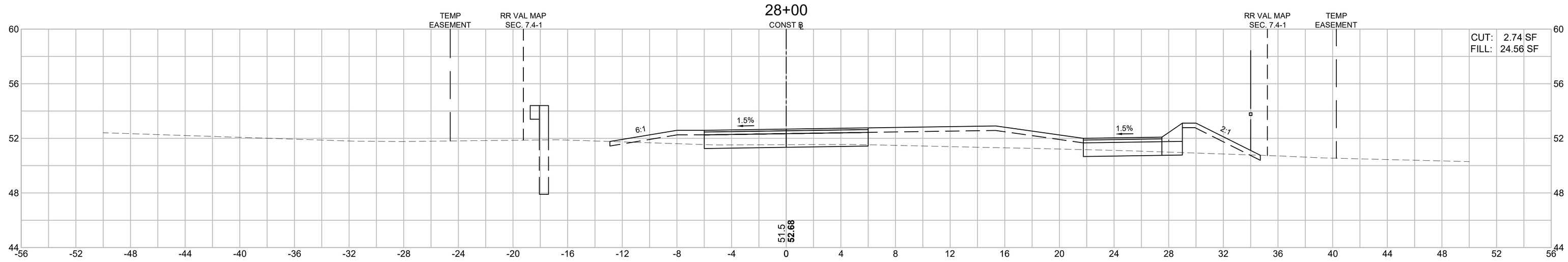

FOR PERMITTING PURPOSES - NOT FOR CONSTRUCTION

608930_HD11(CROSS SECTIONS).DWG Plotted on 28-Oct-2022 9:16 AM

Proposal No. 608930-128034

A00869 - 187

LAWRENCE
LMRC RAIL TRAIL

STATE	FED. AID PROJ. NO.	SHEET NO.	TOTAL SHEETS
MA	-	169	225
PROJECT FILE NO.	608903		

LMRC RAIL TRAIL
CROSS SECTIONS - 9 OF 65

608930_HD11(CROSS SECTIONS).DWG Plotted on 28-Oct-2022 9:18 AM

Proposal No. 608930-128034

A00869 - 188

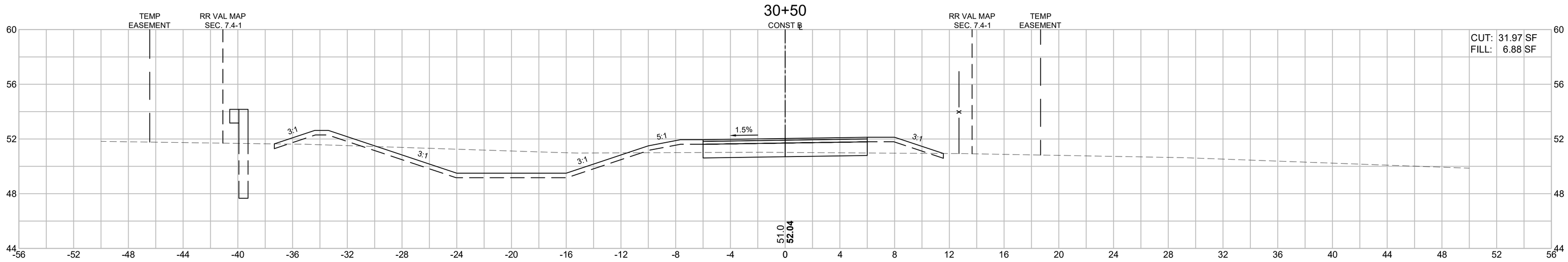

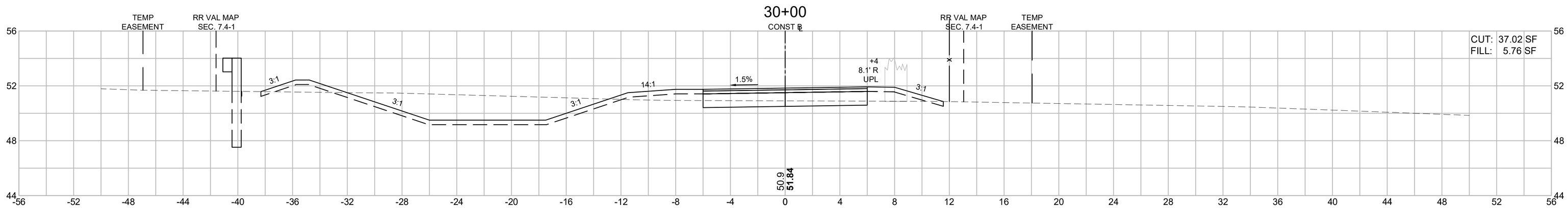

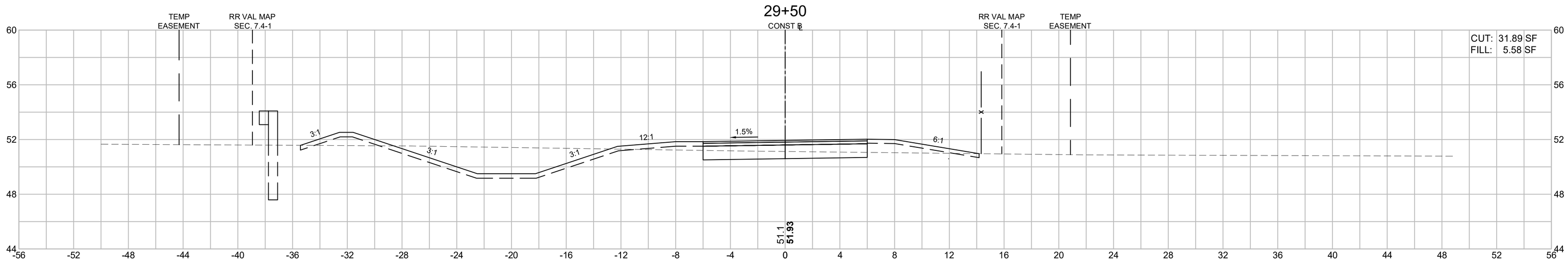

HOR. SCALE IN FEET
4 0 4 8
4 0 4 8
VER. SCALE IN FEET

FOR PERMITTING PURPOSES - NOT FOR CONSTRUCTION

LAWRENCE
LMRC RAIL TRAIL

STATE	FED. AID PROJ. NO.	SHEET NO.	TOTAL SHEETS
MA	-	170	225
PROJECT FILE NO.	608903		

LMRC RAIL TRAIL
CROSS SECTIONS - 10 OF 65

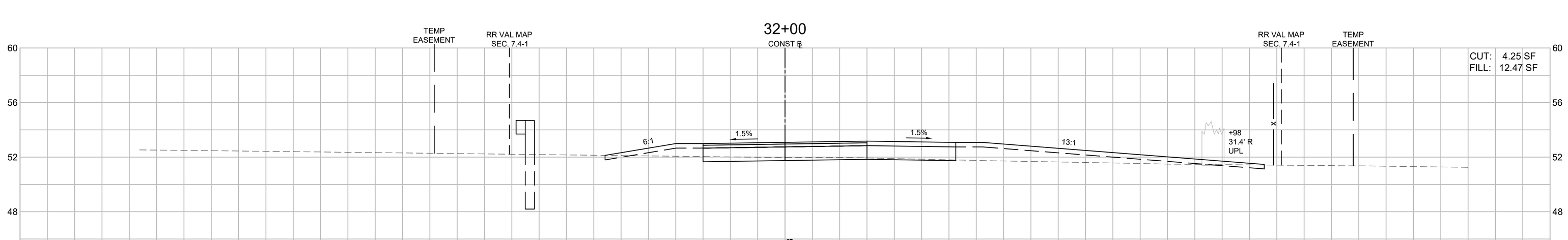

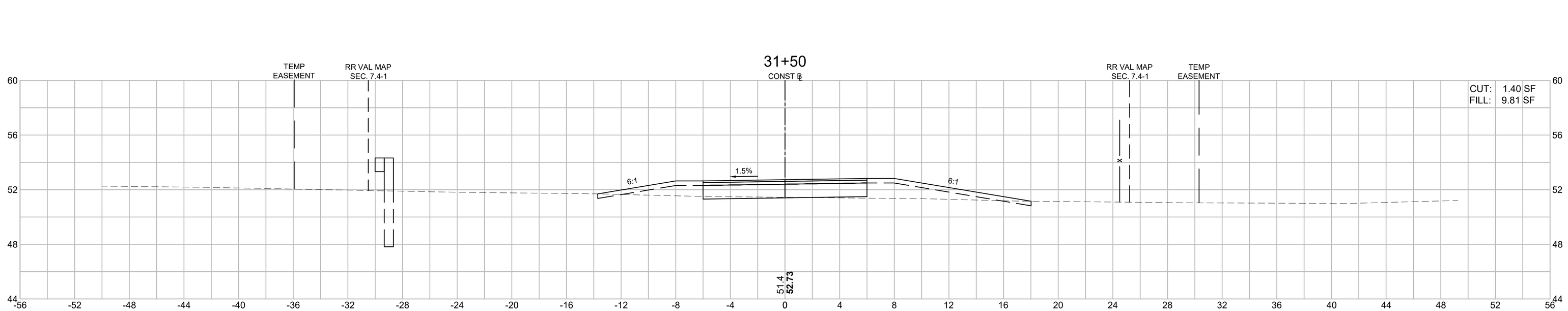

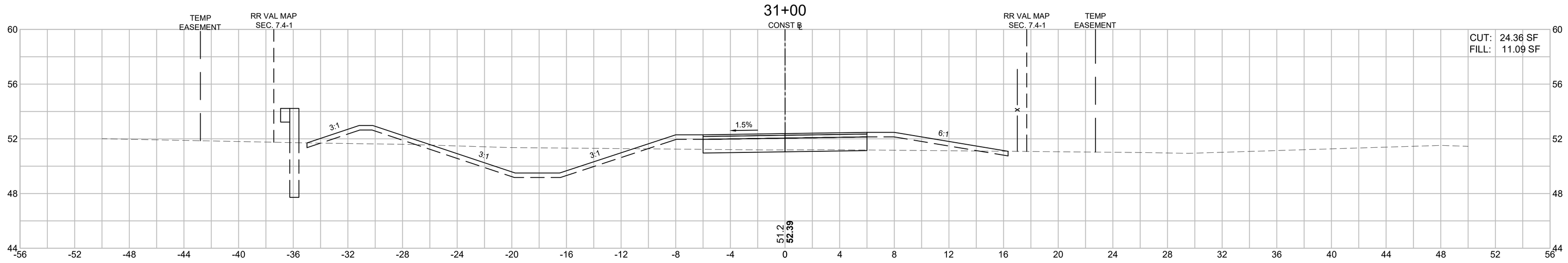

HOR. SCALE IN FEET
4 0 4 8
4 0 4 8
VER. SCALE IN FEET

FOR PERMITTING PURPOSES - NOT FOR CONSTRUCTION

A00869 - 189

Proposal No. 608930-128034

608930_HD11(CROSS SECTIONS).DWG Plotted on 28-Oct-2022 9:19 AM

LAWRENCE
LMRC RAIL TRAIL

STATE	FED. AID PROJ. NO.	SHEET NO.	TOTAL SHEETS
MA	-	171	225
PROJECT FILE NO.	608903		

LMRC RAIL TRAIL
CROSS SECTIONS - 11 OF 65

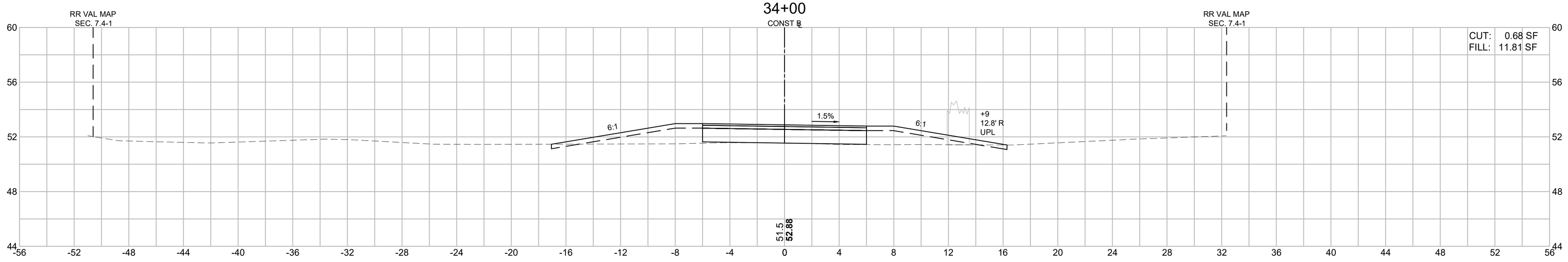

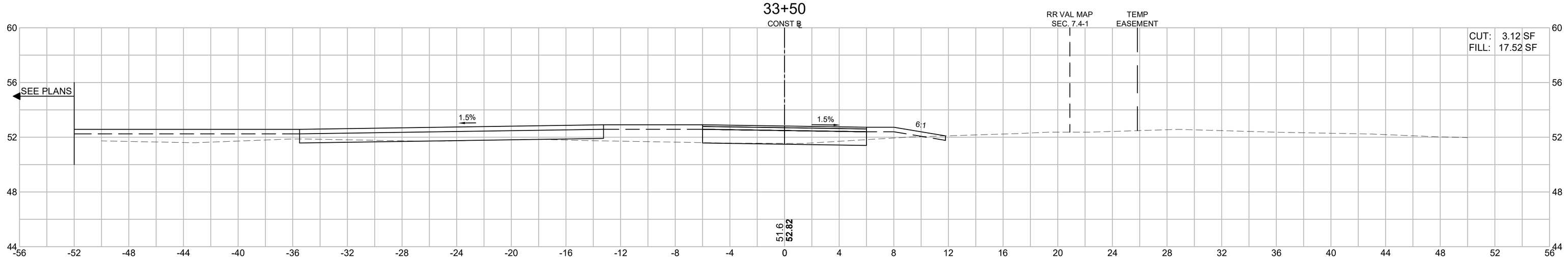

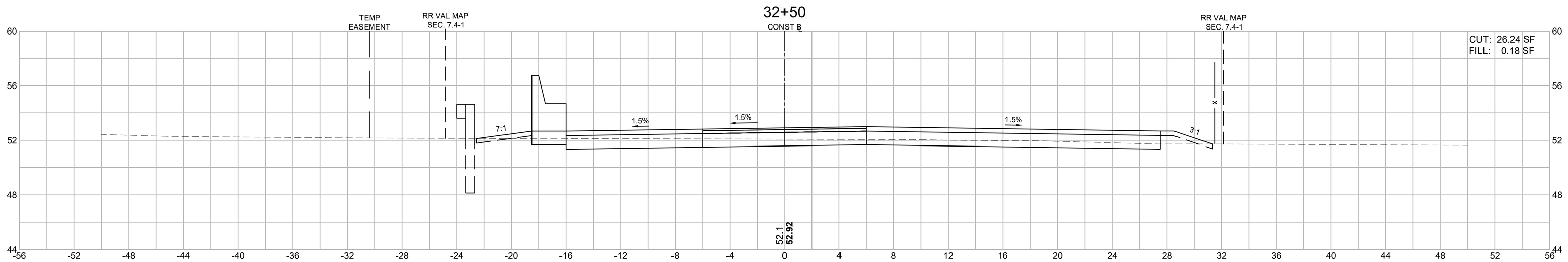

HOR. SCALE IN FEET
4 0 4 8
4 0 4 8
VER. SCALE IN FEET

FOR PERMITTING PURPOSES - NOT FOR CONSTRUCTION

608930_HD11(CROSS SECTIONS).DWG Plotted on 28-Oct-2022 9:19 AM

Proposal No. 608930-128034

A00869 - 190

LAWRENCE
LMRC RAIL TRAIL

STATE	FED. AID PROJ. NO.	SHEET NO.	TOTAL SHEETS
MA	-	172	225
PROJECT FILE NO.	608903		

LMRC RAIL TRAIL
CROSS SECTIONS - 12 OF 65

608930_HD11(CROSS SECTIONS).DWG Plotted on 28-Oct-2022 9:19 AM

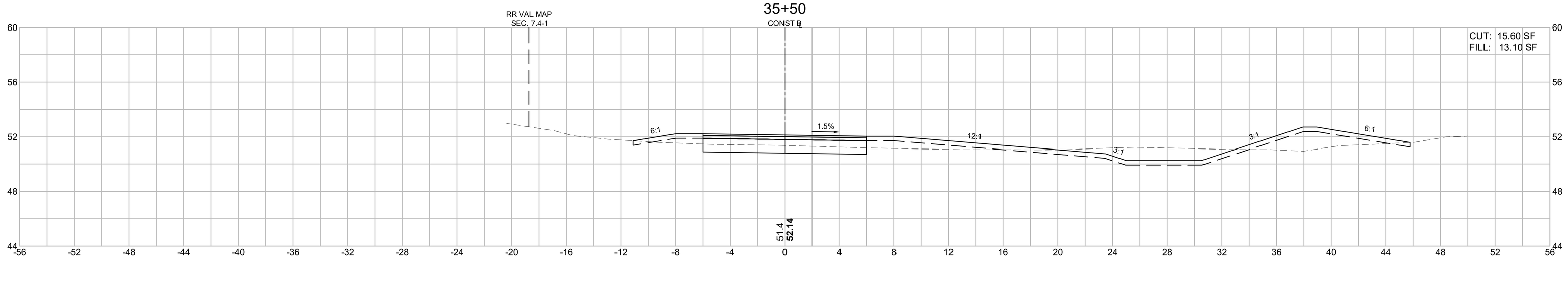

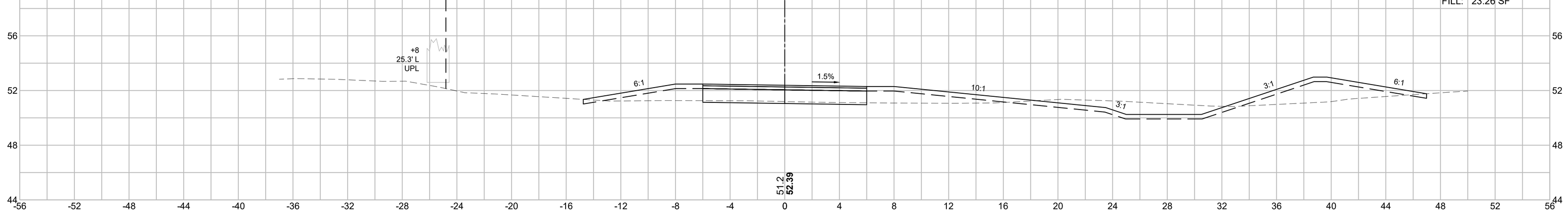

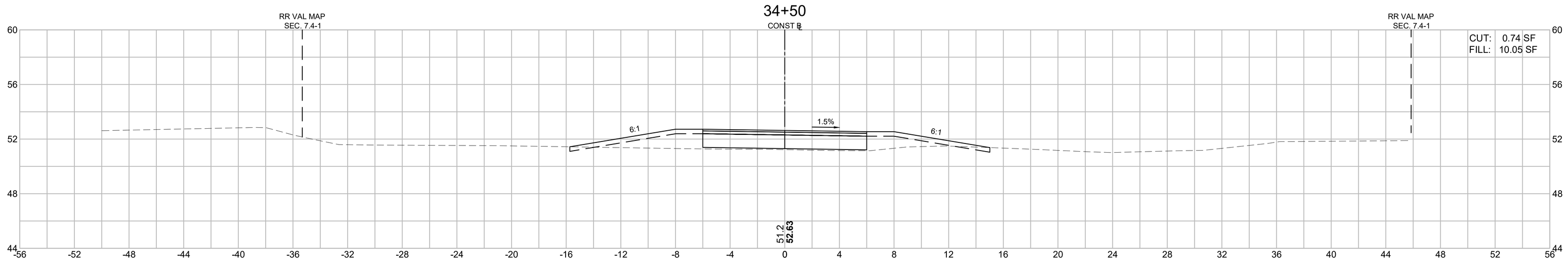

HOR. SCALE IN FEET
4 0 4 8
4 0 4 8
VER. SCALE IN FEET

FOR PERMITTING PURPOSES - NOT FOR CONSTRUCTION

A00869 - 191

Proposal No. 608930-128034

LAWRENCE
LMRC RAIL TRAIL

STATE	FED. AID PROJ. NO.	SHEET NO.	TOTAL SHEETS
MA	-	173	225
PROJECT FILE NO.	608903		

LMRC RAIL TRAIL
CROSS SECTIONS - 13 OF 65

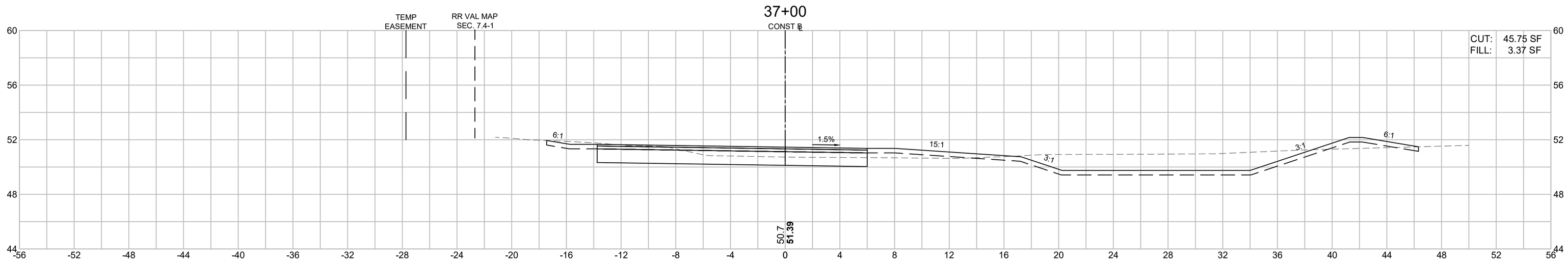

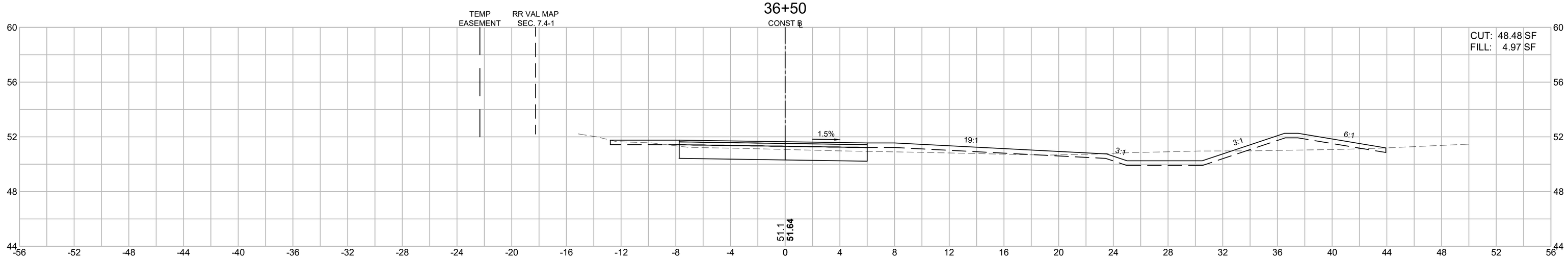

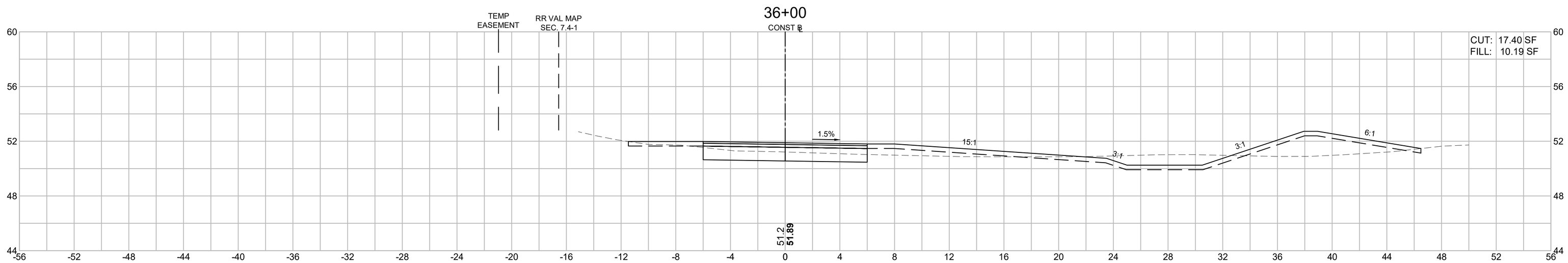

HOR. SCALE IN FEET
4 0 4 8
4 0 4 8
VER. SCALE IN FEET

FOR PERMITTING PURPOSES - NOT FOR CONSTRUCTION

608930_HD11(CROSS SECTIONS).DWG Plotted on 28-Oct-2022 9:19 AM

Proposal No. 608930-128034

LAWRENCE
LMRC RAIL TRAIL

STATE	FED. AID PROJ. NO.	SHEET NO.	TOTAL SHEETS
MA	-	174	225
PROJECT FILE NO.	608903		

LMRC RAIL TRAIL
CROSS SECTIONS - 14 OF 65

608930_HD11(CROSS SECTIONS).DWG Plotted on 28-Oct-2022 9:20 AM

Proposal No. 608930-128034

A00869 - 193

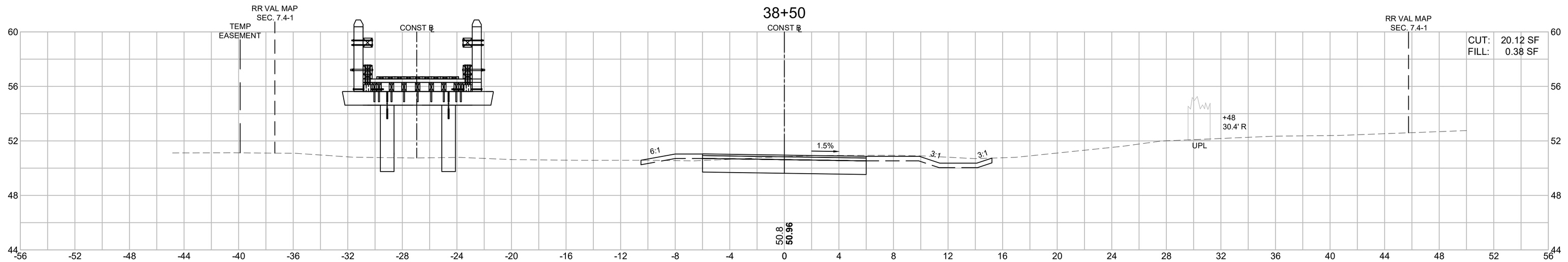

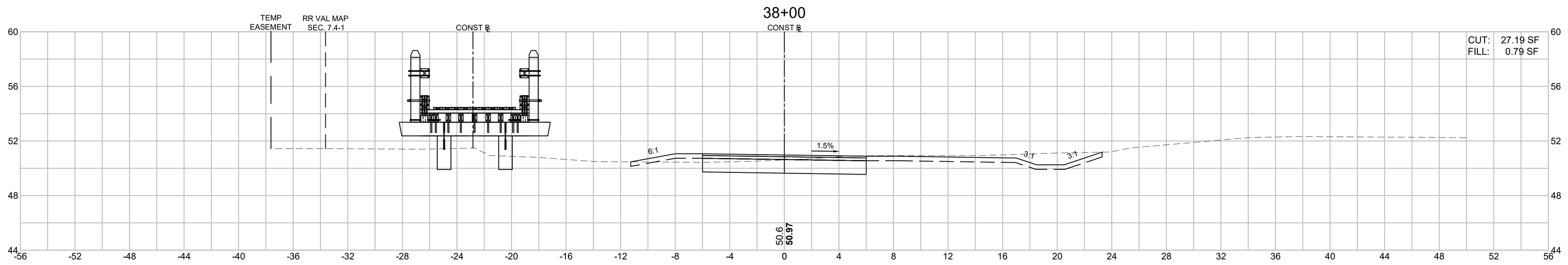

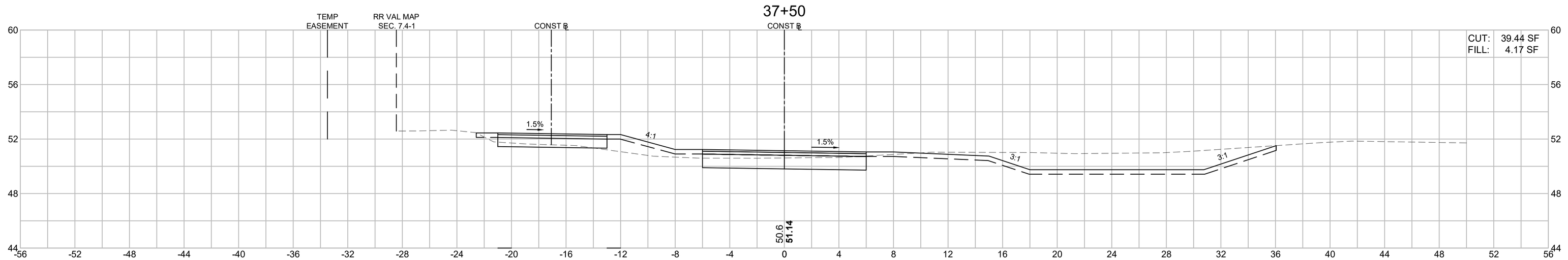

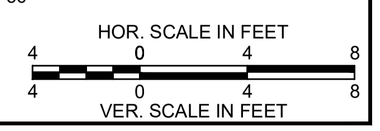

FOR PERMITTING PURPOSES - NOT FOR CONSTRUCTION

608930_HD11(CROSS SECTIONS).DWG Plotted on 28-Oct-2022 9:20 AM

LAWRENCE
LMRC RAIL TRAIL

STATE	FED. AID PROJ. NO.	SHEET NO.	TOTAL SHEETS
MA	-	175	225
PROJECT FILE NO. 608903			

LMRC RAIL TRAIL
CROSS SECTIONS - 15 OF 65

HOR. SCALE IN FEET 4 0 4 8
VER. SCALE IN FEET 4 0 4 8

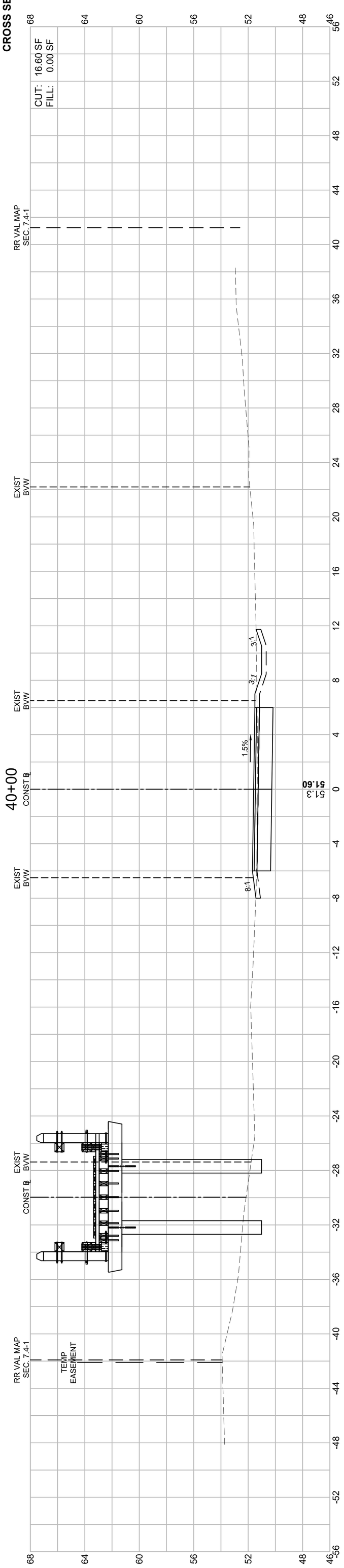

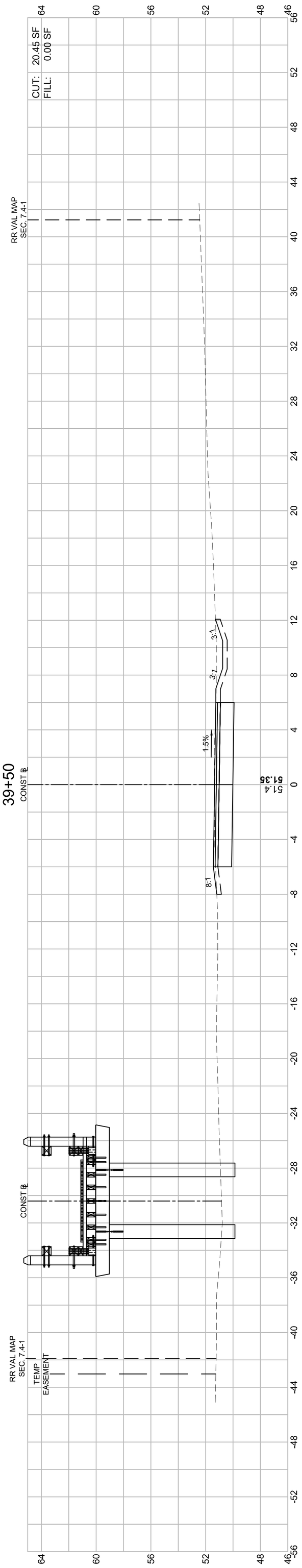

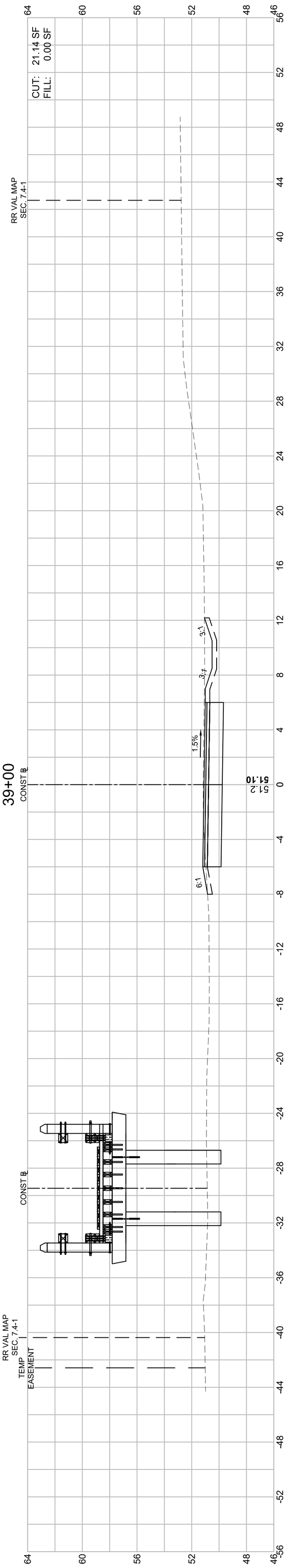

FOR PERMITTING PURPOSES - NOT FOR CONSTRUCTION

608930_HD11(CROSS SECTIONS).DWG Plotted on 28-Oct-2022 9:20 AM

LAWRENCE
LMRC RAIL TRAIL

STATE	FED. AID PROJ. NO.	SHEET NO.	TOTAL SHEETS
MA	-	176	225
PROJECT FILE NO. 608903			

LMRC RAIL TRAIL
CROSS SECTIONS - 16 OF 65

HOR. SCALE IN FEET 0 4 8
VER. SCALE IN FEET 0 4 8

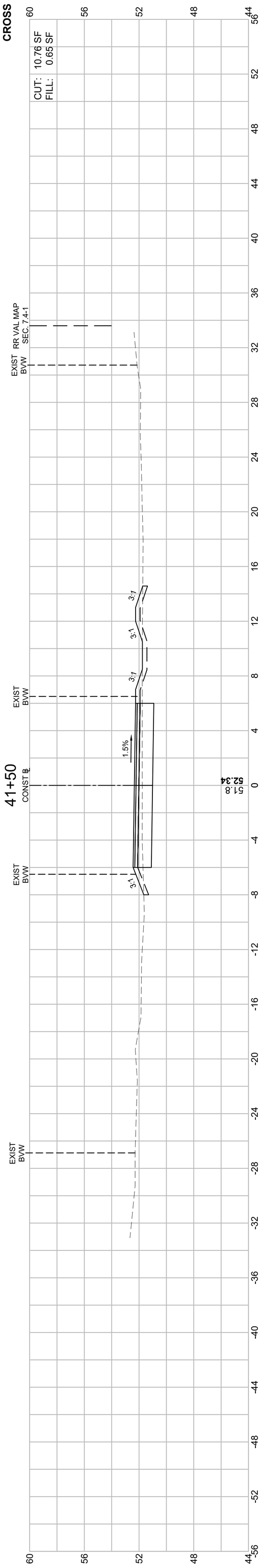

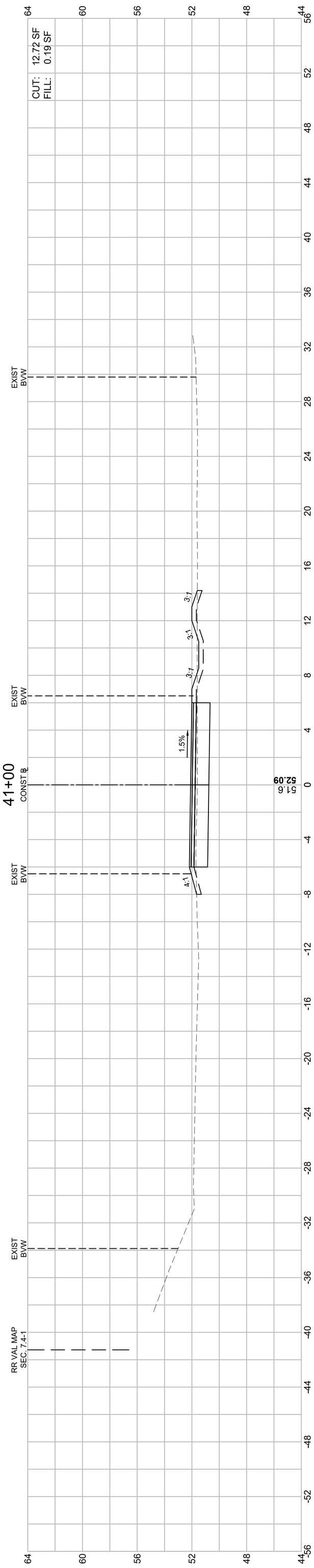

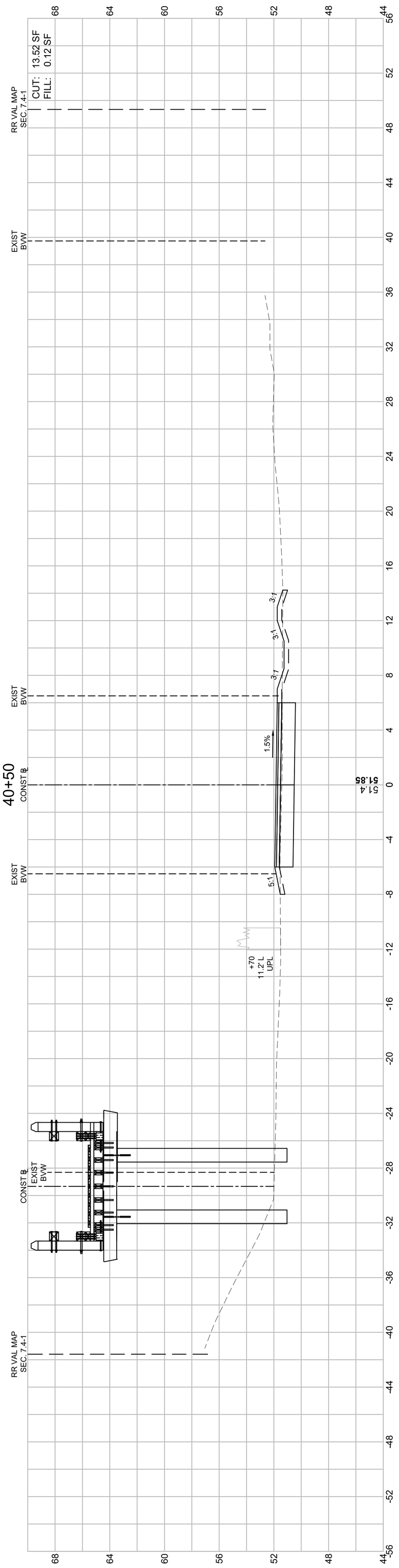

FOR PERMITTING PURPOSES - NOT FOR CONSTRUCTION

608930_HD11(CROSS SECTIONS).DWG Plotted on 28-Oct-2022 9:20 AM

LAWRENCE
LMRC RAIL TRAIL

STATE	FED. AID PROJ. NO.	SHEET NO.	TOTAL SHEETS
MA	-	177	225
PROJECT FILE NO. 608903			

LMRC RAIL TRAIL
CROSS SECTIONS - 17 OF 65

HOR. SCALE IN FEET 4 0 4 8
VER. SCALE IN FEET 4 0 4 8

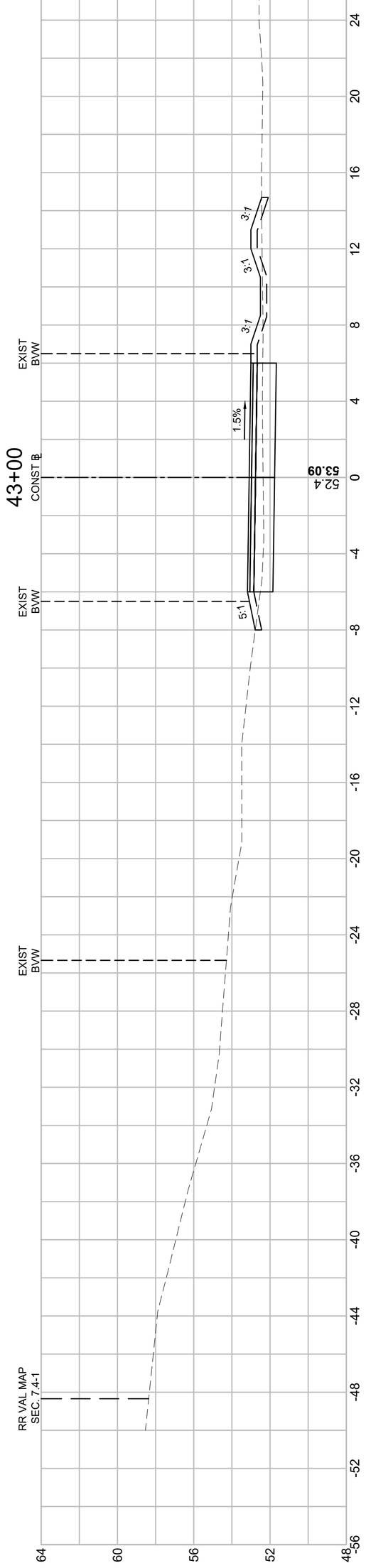

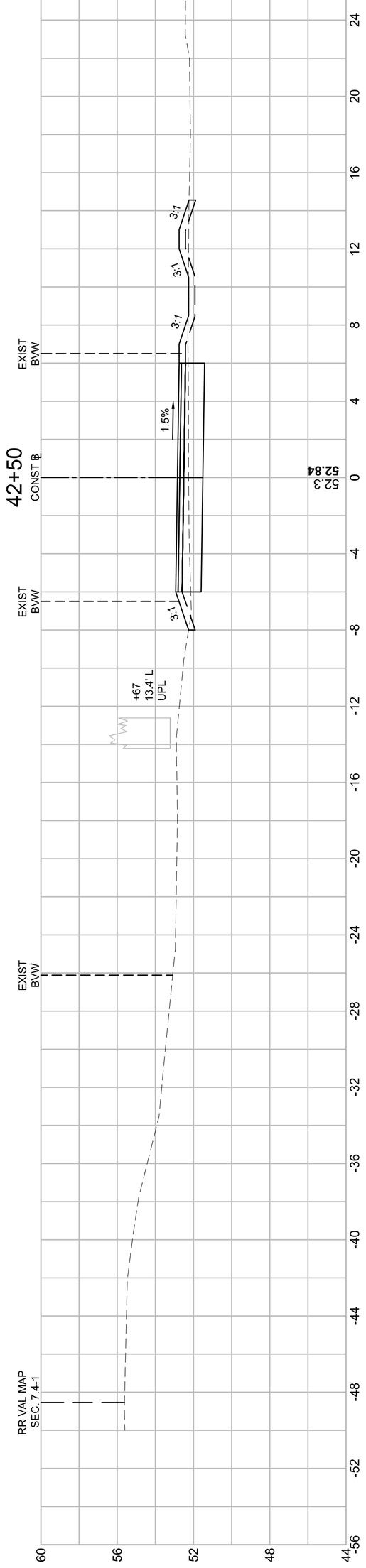

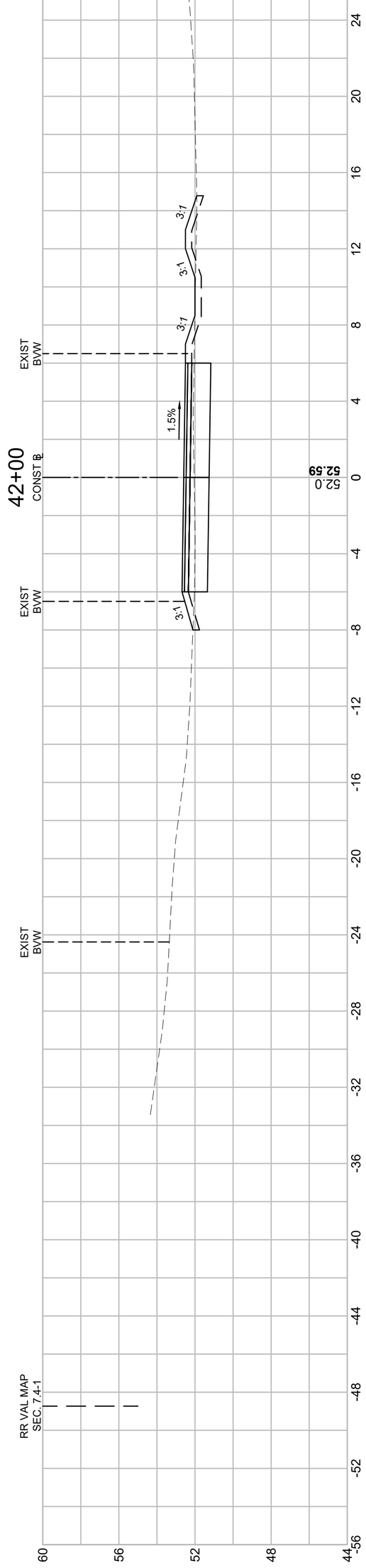

FOR PERMITTING PURPOSES - NOT FOR CONSTRUCTION

LAWRENCE
LMRC RAIL TRAIL

STATE	FED. AID PROJ. NO.	SHEET NO.	TOTAL SHEETS
MA	-	178	225
PROJECT FILE NO.	608903		

LMRC RAIL TRAIL
CROSS SECTIONS - 18 OF 65

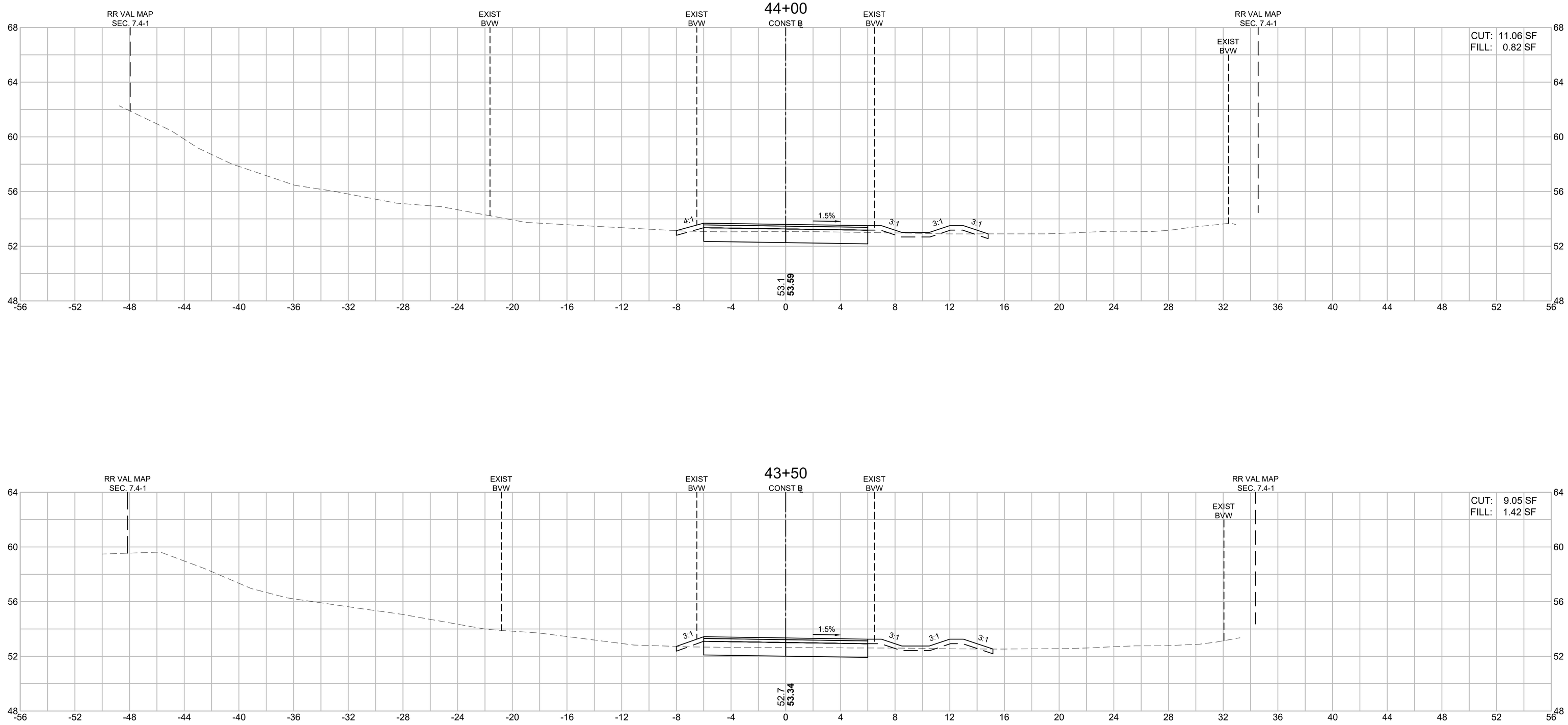

608930_HD11\(CROSS SECTIONS).DWG Plotted on 28-Oct-2022 9:21 AM

Proposal No. 608930-128034

FOR PERMITTING PURPOSES - NOT FOR CONSTRUCTION

LAWRENCE
LMRC RAIL TRAIL

STATE	FED. AID PROJ. NO.	SHEET NO.	TOTAL SHEETS
MA	-	179	225
PROJECT FILE NO.	608903		

LMRC RAIL TRAIL
CROSS SECTIONS - 19 OF 65

608930_HD11\(CROSS SECTIONS).DWG Plotted on 28-Oct-2022 9:21 AM

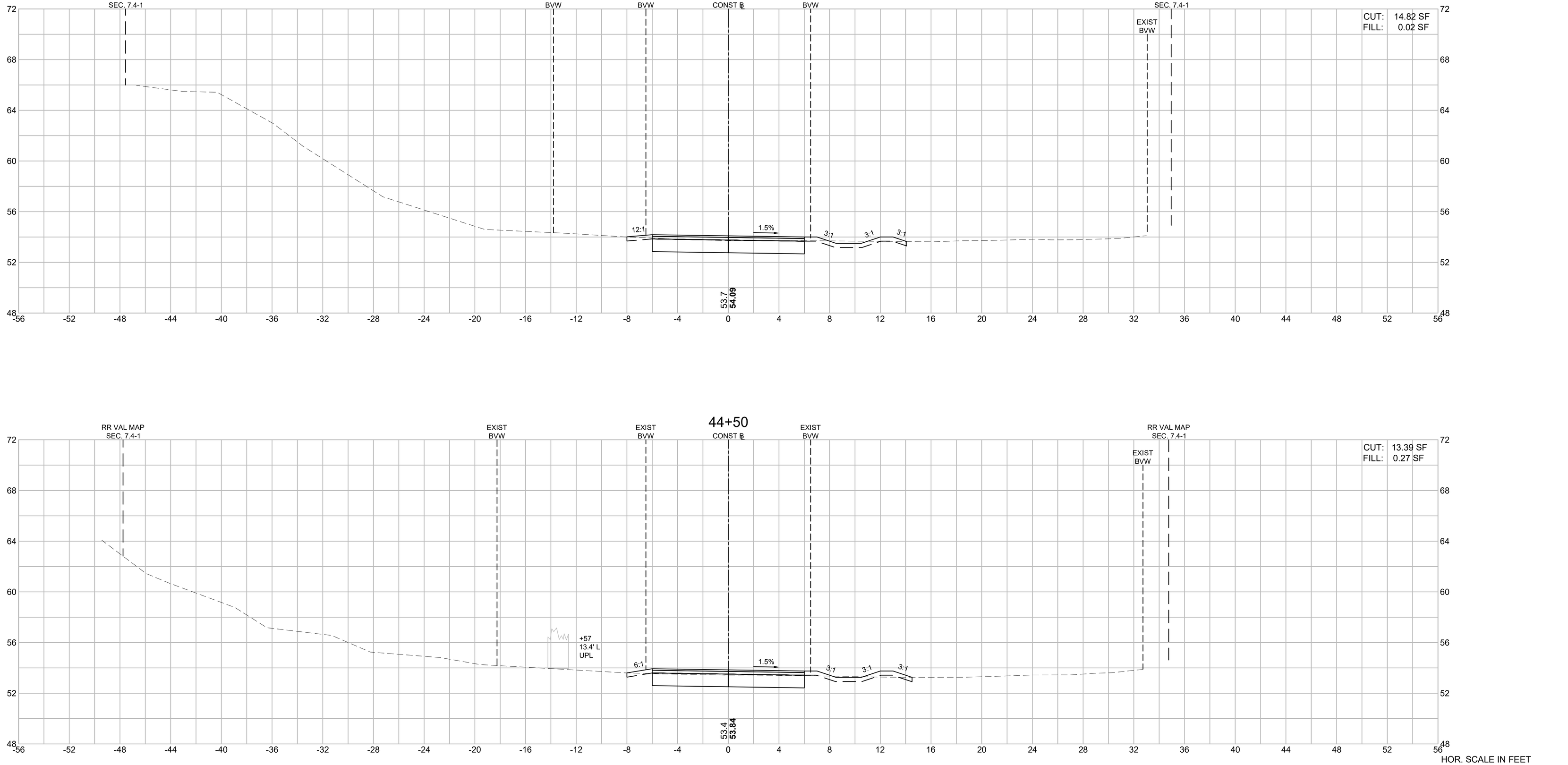

FOR PERMITTING PURPOSES - NOT FOR CONSTRUCTION

A00869 - 199 - 198

Proposal No. 608930-128034

LAWRENCE
LMRC RAIL TRAIL

STATE	FED. AID PROJ. NO.	SHEET NO.	TOTAL SHEETS
MA	-	180	225
PROJECT FILE NO.	608903		

LMRC RAIL TRAIL
CROSS SECTIONS - 20 OF 65

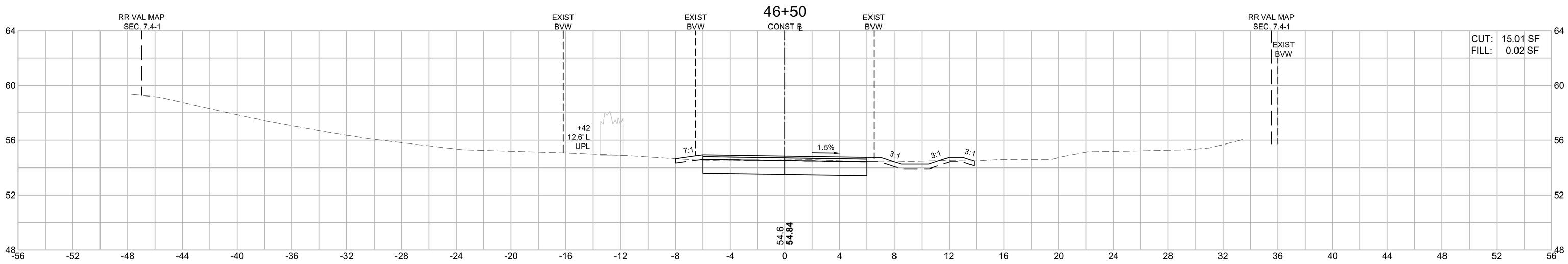

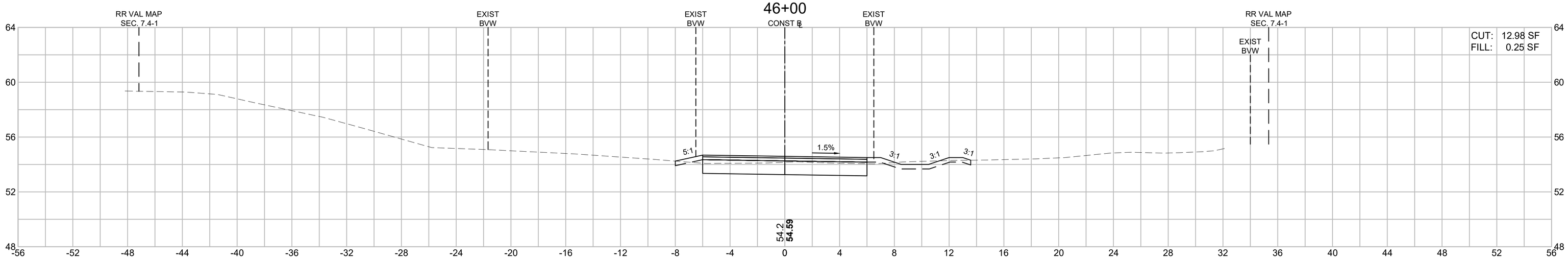

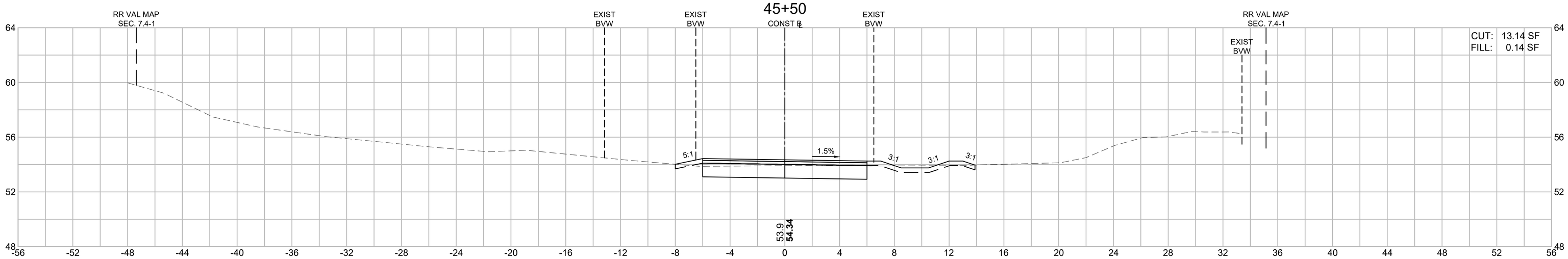

HOR. SCALE IN FEET
4 0 4 8
4 0 4 8
VER. SCALE IN FEET

FOR PERMITTING PURPOSES - NOT FOR CONSTRUCTION

608930_HD11(CROSS SECTIONS).DWG Plotted on 28-Oct-2022 9:21 AM

Proposal No. 608930-128034

A00869 - 199

LAWRENCE
LMRC RAIL TRAIL

STATE	FED. AID PROJ. NO.	SHEET NO.	TOTAL SHEETS
MA	-	181	225
PROJECT FILE NO.	608903		

LMRC RAIL TRAIL
CROSS SECTIONS - 21 OF 65

608930_HD11\(CROSS SECTIONS).DWG Plotted on 28-Oct-2022 9:21 AM

Proposal No. 608930-128034

A00869 - 200

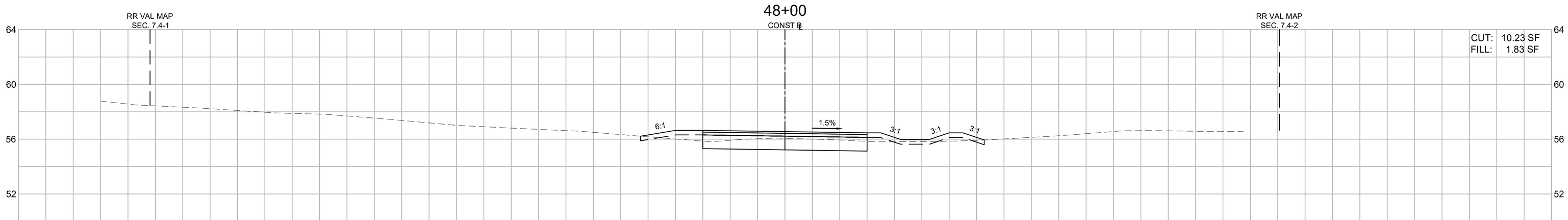

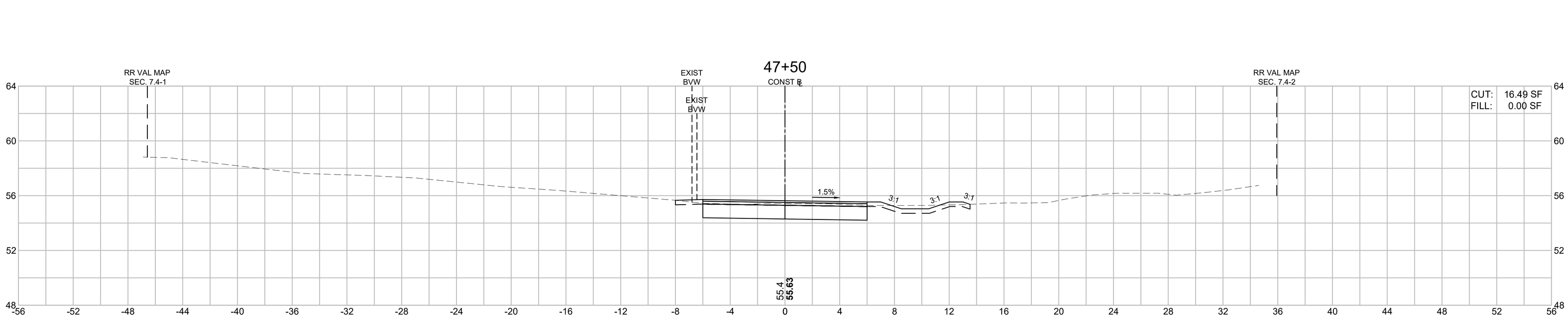

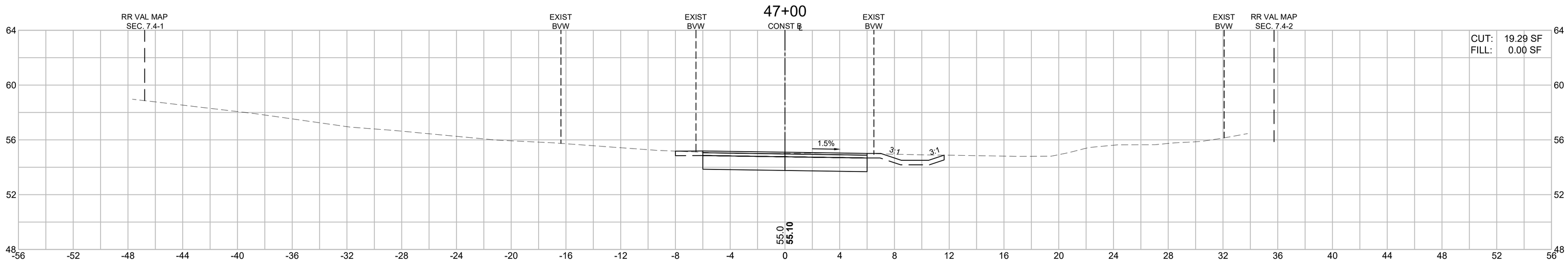

HOR. SCALE IN FEET
4 0 4 8
4 0 4 8
VER. SCALE IN FEET

FOR PERMITTING PURPOSES - NOT FOR CONSTRUCTION

LAWRENCE
LMRC RAIL TRAIL

STATE	FED. AID PROJ. NO.	SHEET NO.	TOTAL SHEETS
MA	-	182	225
PROJECT FILE NO.	608903		

LMRC RAIL TRAIL
CROSS SECTIONS - 22 OF 65

608930_HD11\CROSS SECTIONS\.DWG Plotted on 28-Oct-2022 9:22 AM

Proposal No. 608930-128034

A00869 - 201

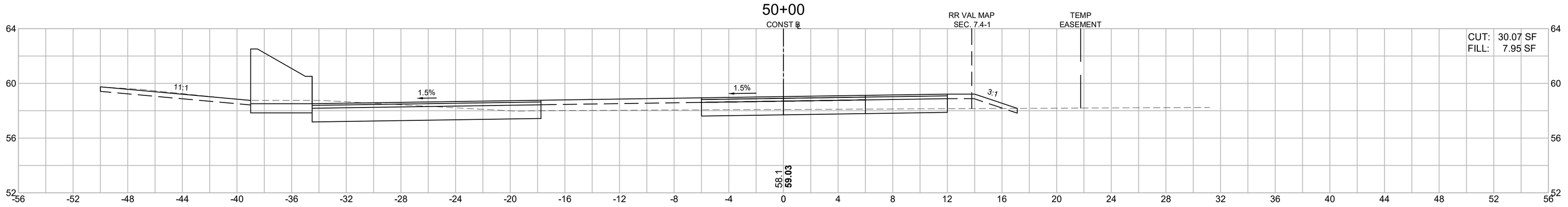

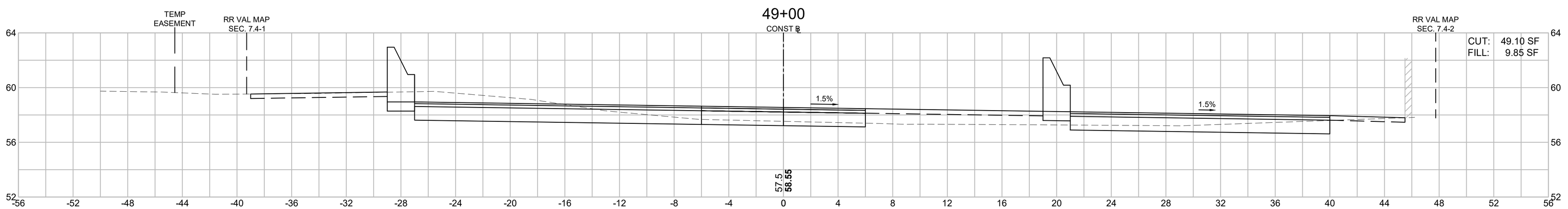

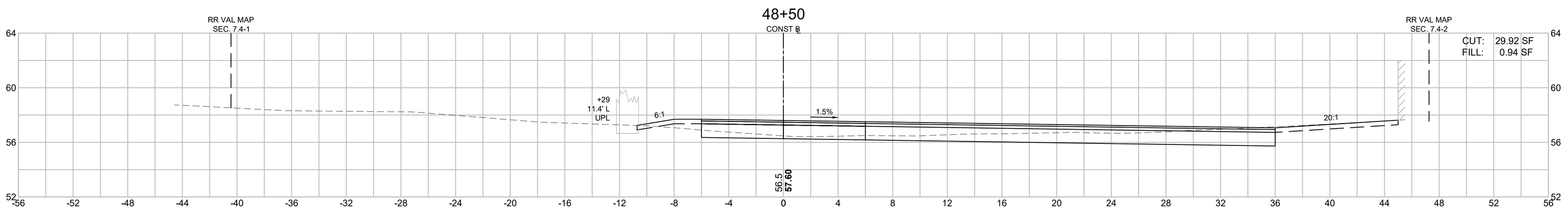

HOR. SCALE IN FEET
4 0 4 8
4 0 4 8
VER. SCALE IN FEET

FOR PERMITTING PURPOSES - NOT FOR CONSTRUCTION

LAWRENCE
LMRC RAIL TRAIL

STATE	FED. AID PROJ. NO.	SHEET NO.	TOTAL SHEETS
MA	-	183	225
PROJECT FILE NO.	608903		

LMRC RAIL TRAIL
CROSS SECTIONS - 23 OF 65

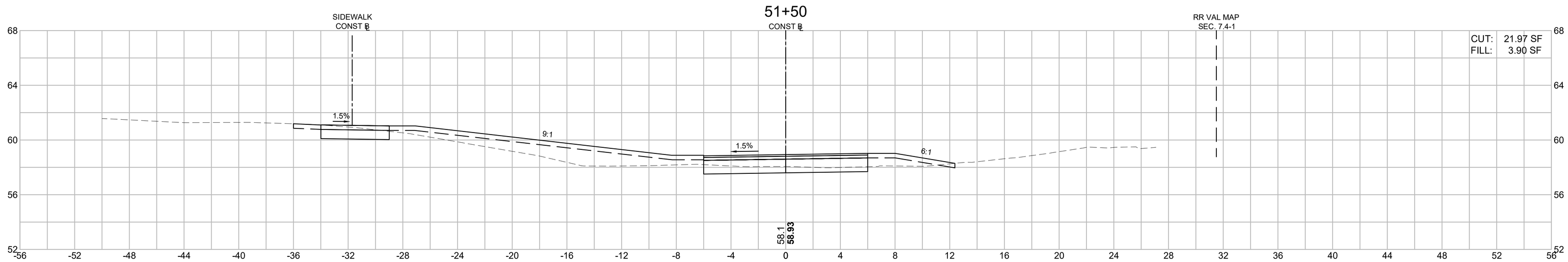

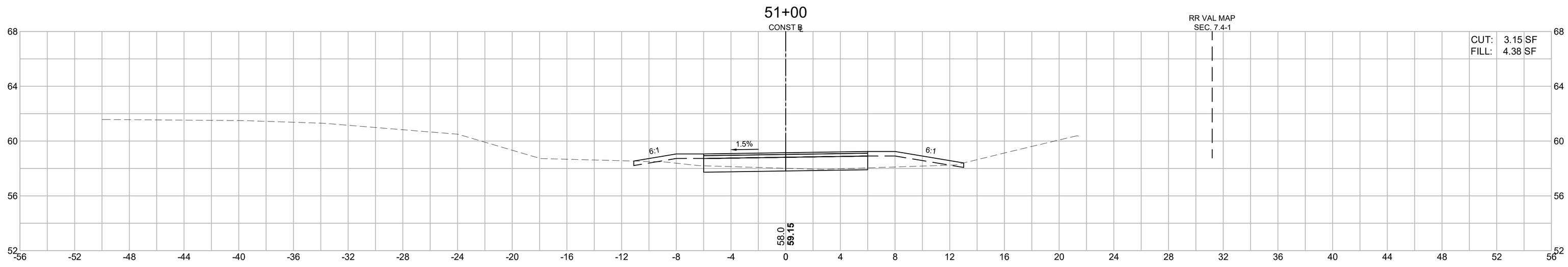

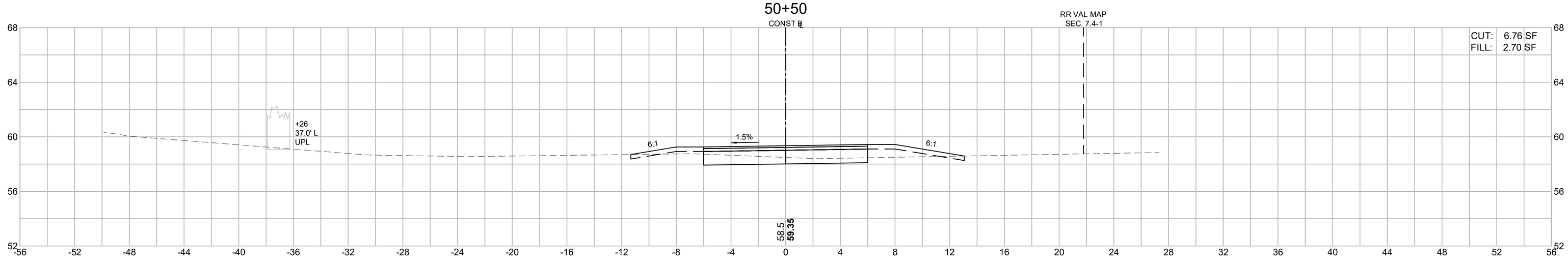

HOR. SCALE IN FEET
4 0 4 8
4 0 4 8
VER. SCALE IN FEET

FOR PERMITTING PURPOSES - NOT FOR CONSTRUCTION

608930_HD11(CROSS SECTIONS).DWG Plotted on 28-Oct-2022 9:22 AM

Proposal No. 608930-128034

A00869 - 202

608930_HD11(CROSS SECTIONS).DWG Plotted on 28-Oct-2022 9:22 AM

LAWRENCE
LMRC RAIL TRAIL

STATE	FED. AID PROJ. NO.	SHEET NO.	TOTAL SHEETS
MA	-	184	225
PROJECT FILE NO. 608903			

LMRC RAIL TRAIL
CROSS SECTIONS - 24 OF 65

HOR. SCALE IN FEET 4 0 4 8
VER. SCALE IN FEET 4 0 4 8

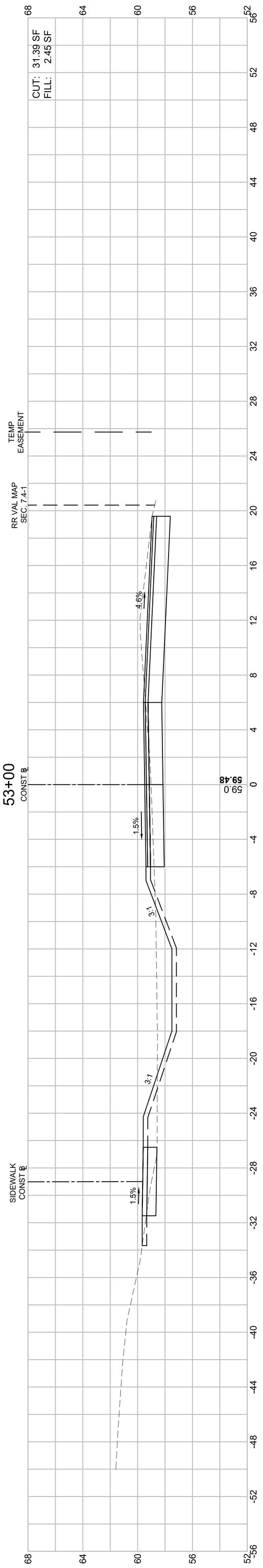

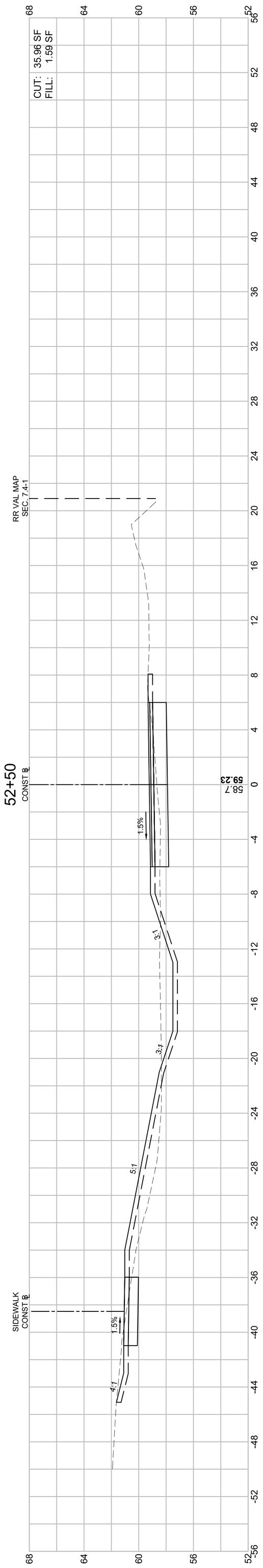

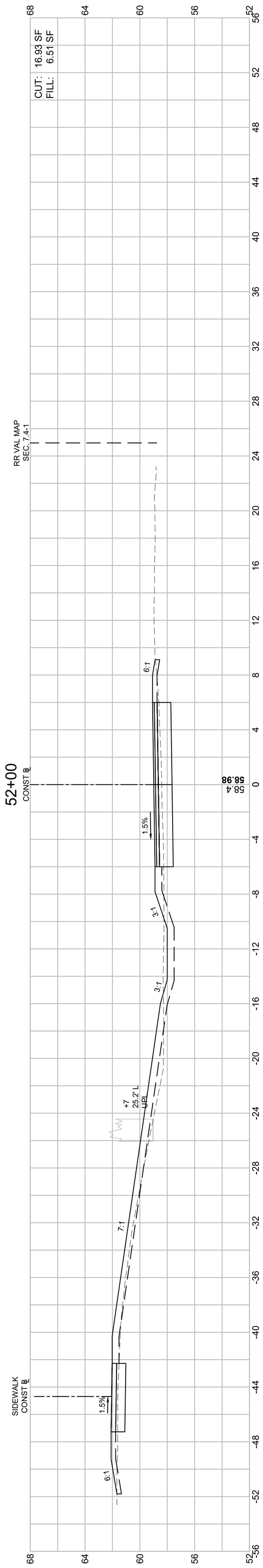

FOR PERMITTING PURPOSES - NOT FOR CONSTRUCTION

LAWRENCE
LMRC RAIL TRAIL

STATE	FED. AID PROJ. NO.	SHEET NO.	TOTAL SHEETS
MA	-	185	225
PROJECT FILE NO.	608903		

LMRC RAIL TRAIL
CROSS SECTIONS - 25 OF 65

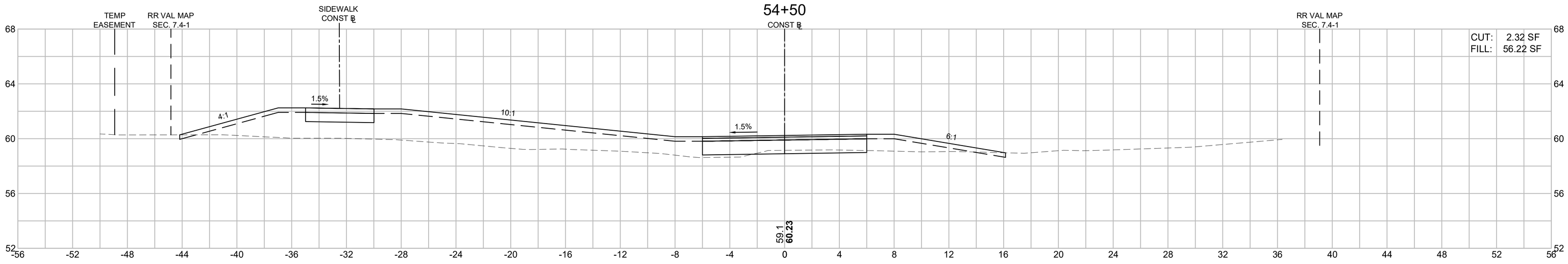

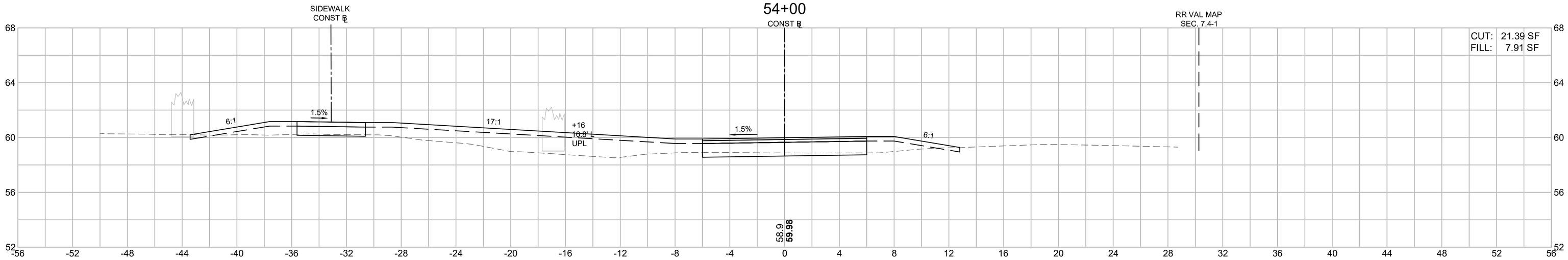

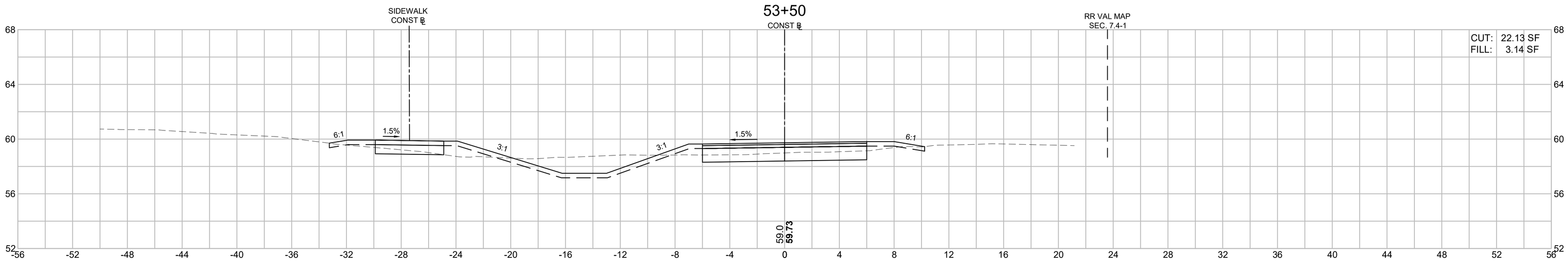

HOR. SCALE IN FEET
4 0 4 8
4 0 4 8
VER. SCALE IN FEET

FOR PERMITTING PURPOSES - NOT FOR CONSTRUCTION

608930_HD11(CROSS SECTIONS).DWG Plotted on 28-Oct-2022 9:22 AM

Proposal No. 608930-128034

A00869 - 204

608930_HD11(CROSS SECTIONS).DWG Plotted on 28-Oct-2022 9:23 AM

LAWRENCE
LMRC RAIL TRAIL

STATE	FED. AID PROJ. NO.	SHEET NO.	TOTAL SHEETS
MA	-	186	225
PROJECT FILE NO. 608903			

LMRC RAIL TRAIL
CROSS SECTIONS - 26 OF 65

HOR. SCALE IN FEET 4 0 4 8
VER. SCALE IN FEET 4 0 4 8

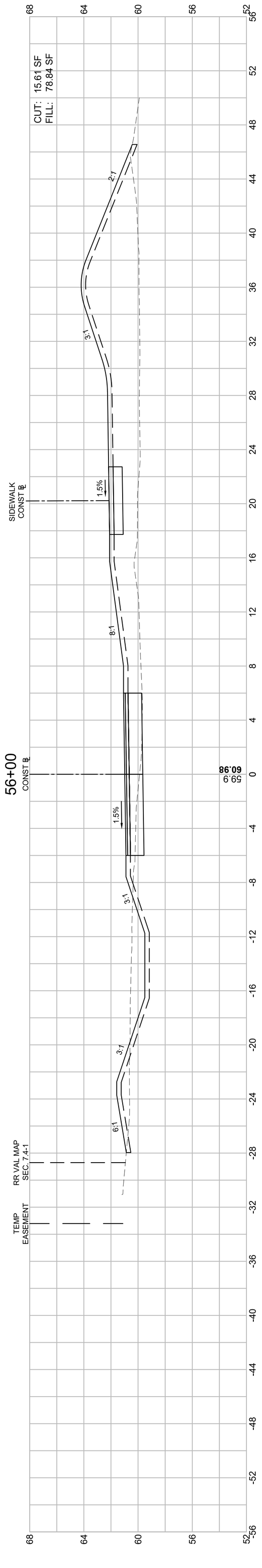

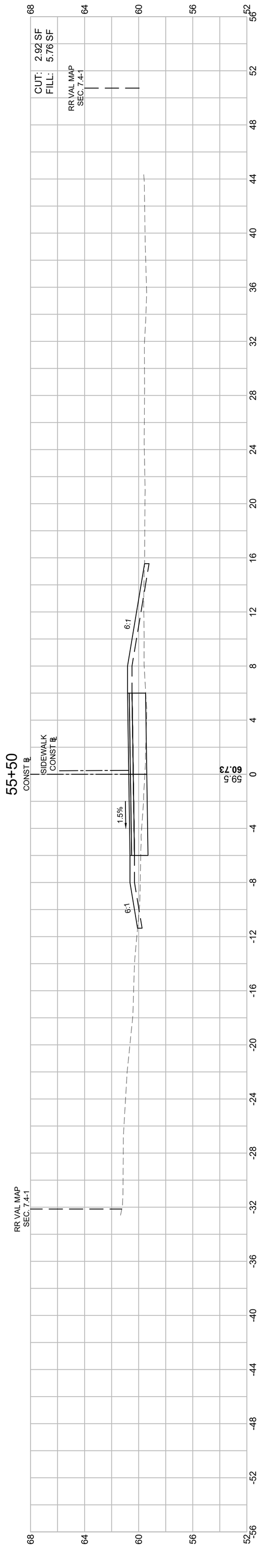

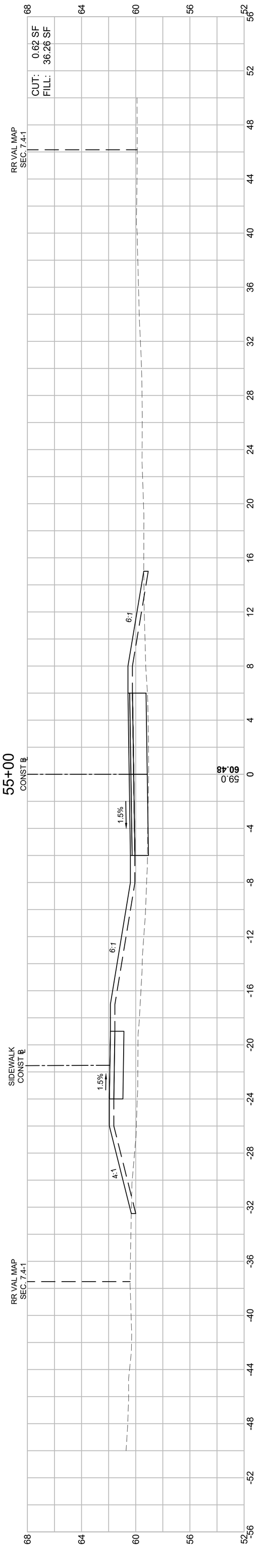

FOR PERMITTING PURPOSES - NOT FOR CONSTRUCTION

LAWRENCE
LMRC RAIL TRAIL

STATE	FED. AID PROJ. NO.	SHEET NO.	TOTAL SHEETS
MA	-	187	225
PROJECT FILE NO.	608903		

LMRC RAIL TRAIL
CROSS SECTIONS - 27 OF 65

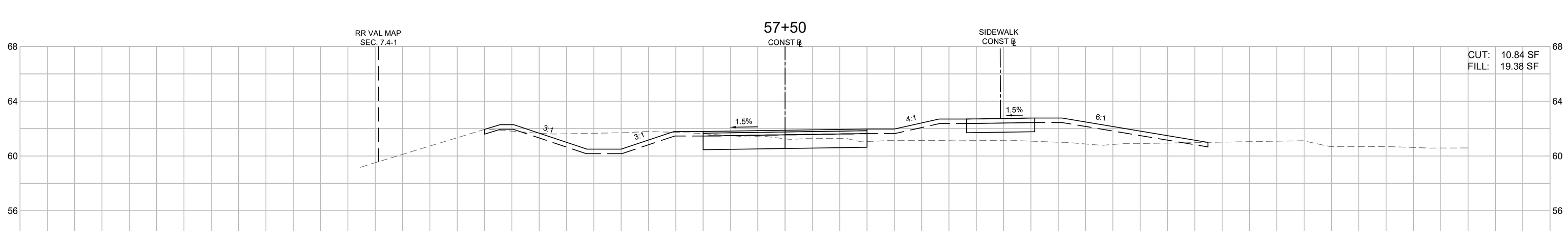

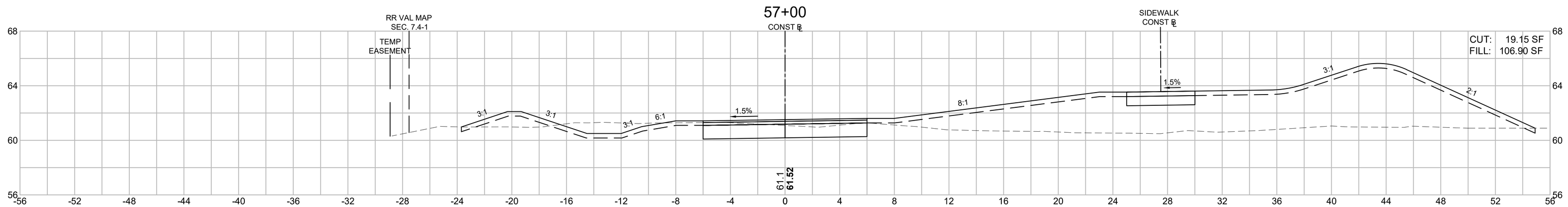

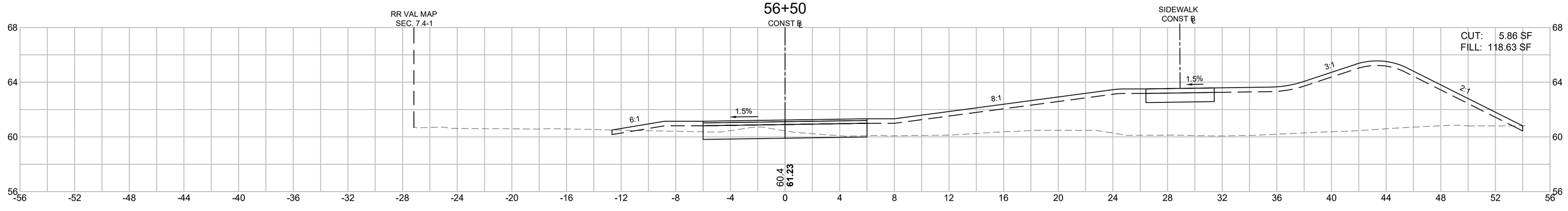

HOR. SCALE IN FEET
4 0 4 8
VER. SCALE IN FEET
4 0 4 8

FOR PERMITTING PURPOSES - NOT FOR CONSTRUCTION

608930_HD11(CROSS SECTIONS).DWG Plotted on 28-Oct-2022 9:23 AM

Proposal No. 608930-128034

A00869 - 206

LAWRENCE
LMRC RAIL TRAIL

STATE	FED. AID PROJ. NO.	SHEET NO.	TOTAL SHEETS
MA	-	188	225
PROJECT FILE NO.	608903		

LMRC RAIL TRAIL
CROSS SECTIONS - 28 OF 65

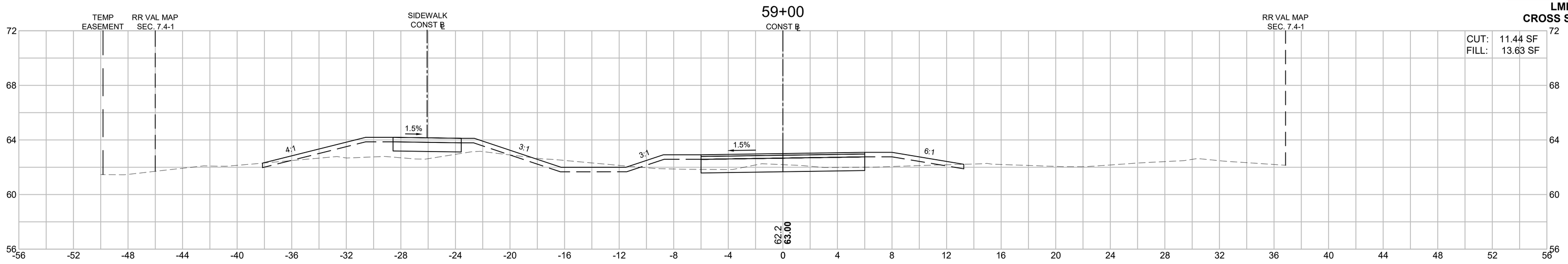

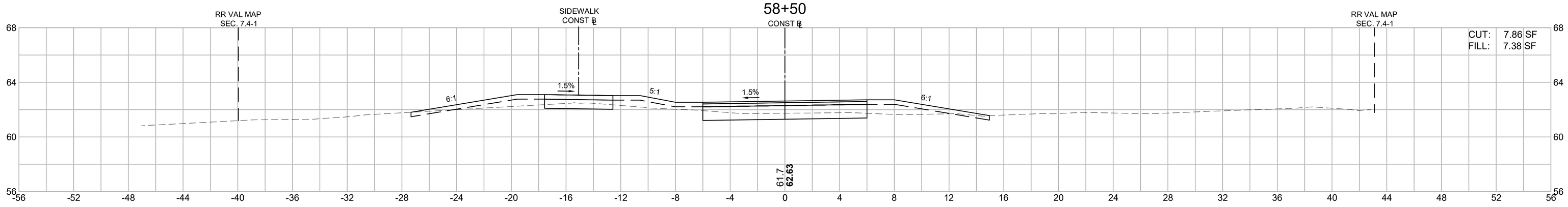

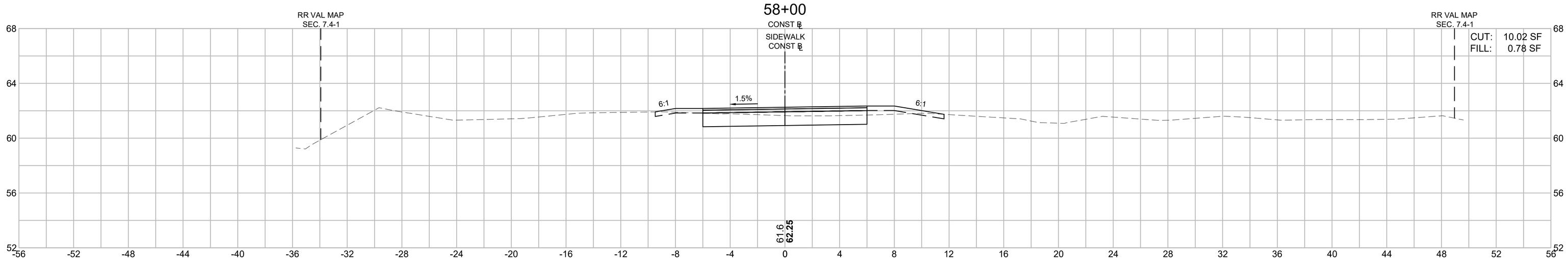

HOR. SCALE IN FEET
4 0 4 8
4 0 4 8
VER. SCALE IN FEET

FOR PERMITTING PURPOSES - NOT FOR CONSTRUCTION

608930_HD11(CROSS SECTIONS).DWG Plotted on 28-Oct-2022 9:23 AM

Proposal No. 608930-128034

A00869 - 207

LAWRENCE
LMRC RAIL TRAIL

STATE	FED. AID PROJ. NO.	SHEET NO.	TOTAL SHEETS
MA	-	189	225
PROJECT FILE NO.	608903		

LMRC RAIL TRAIL
CROSS SECTIONS - 29 OF 65

Plotted on 28-Oct-2022 9:24 AM

608930_HD11\(CROSS SECTIONS).DWG

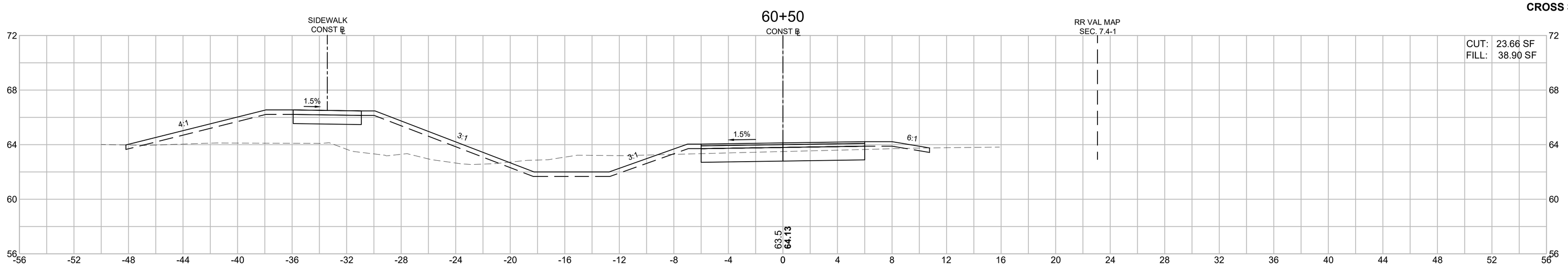

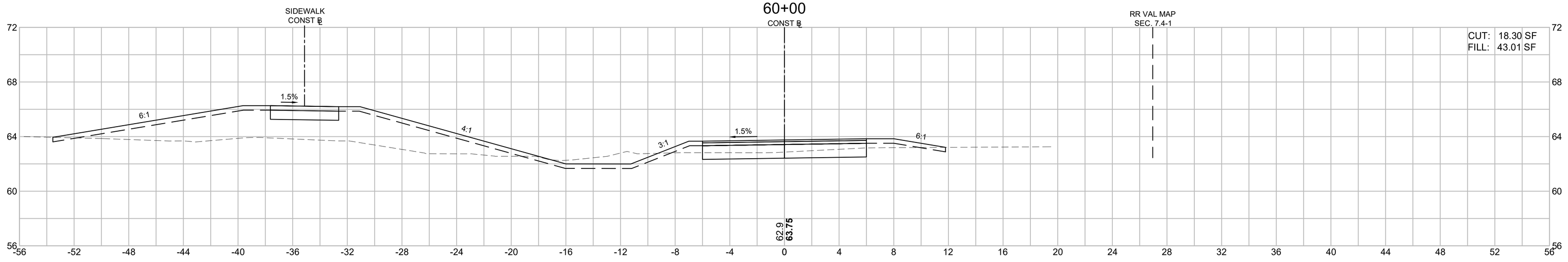

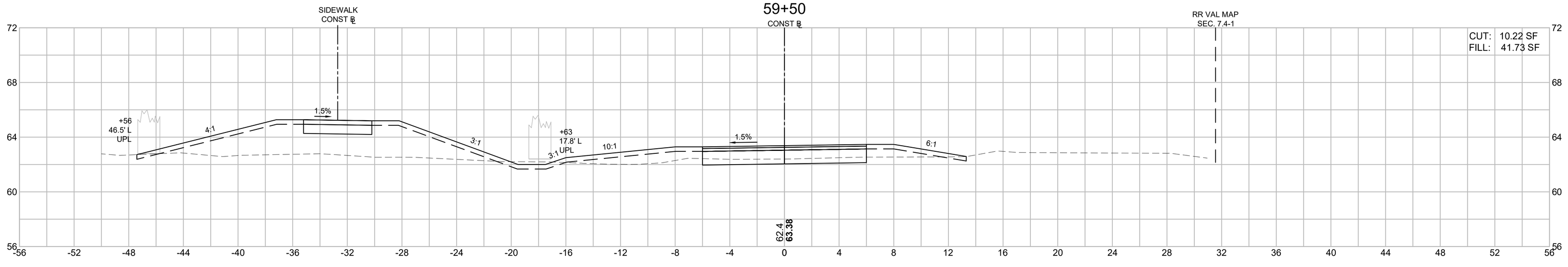

FOR PERMITTING PURPOSES - NOT FOR CONSTRUCTION

A00869 - 208

Proposal No. 608930-128034

LAWRENCE
LMRC RAIL TRAIL

STATE	FED. AID PROJ. NO.	SHEET NO.	TOTAL SHEETS
MA	-	190	225
PROJECT FILE NO.	608903		

LMRC RAIL TRAIL
CROSS SECTIONS - 30 OF 65

608930_HD11(CROSS SECTIONS).DWG Plotted on 28-Oct-2022 9:24 AM

Proposal No. 608930-128034

A00869 - 209

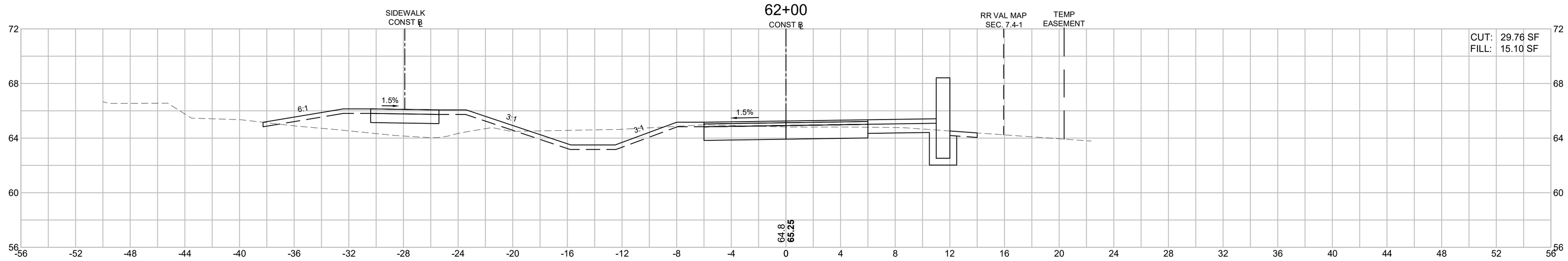

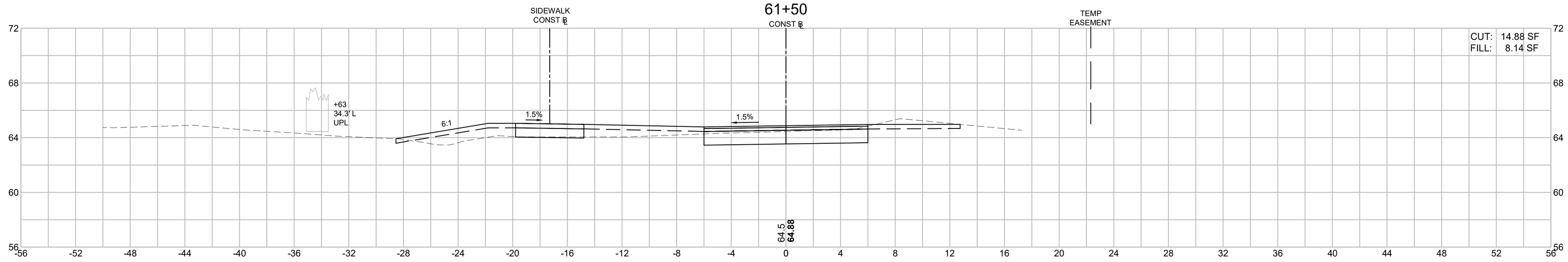

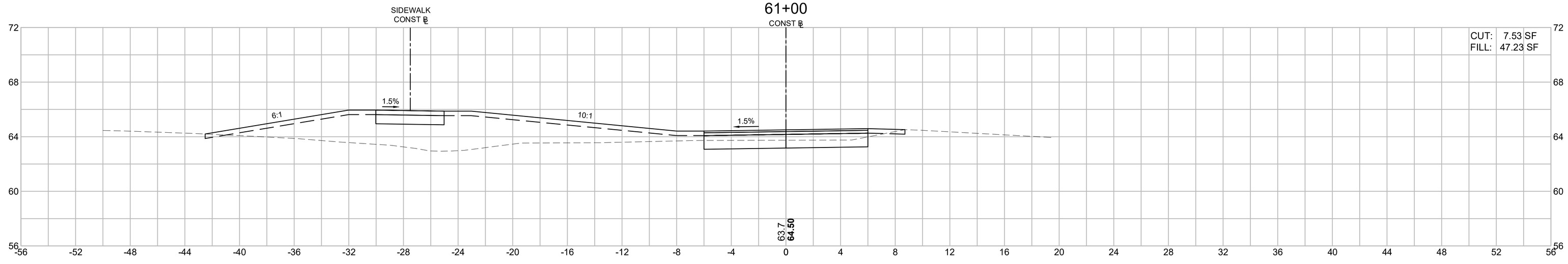

HOR. SCALE IN FEET
4 0 4 8
VER. SCALE IN FEET
4 0 4 8

FOR PERMITTING PURPOSES - NOT FOR CONSTRUCTION

LAWRENCE
LMRC RAIL TRAIL

STATE	FED. AID PROJ. NO.	SHEET NO.	TOTAL SHEETS
MA	-	191	225
PROJECT FILE NO.	608903		

LMRC RAIL TRAIL
CROSS SECTIONS - 31 OF 65

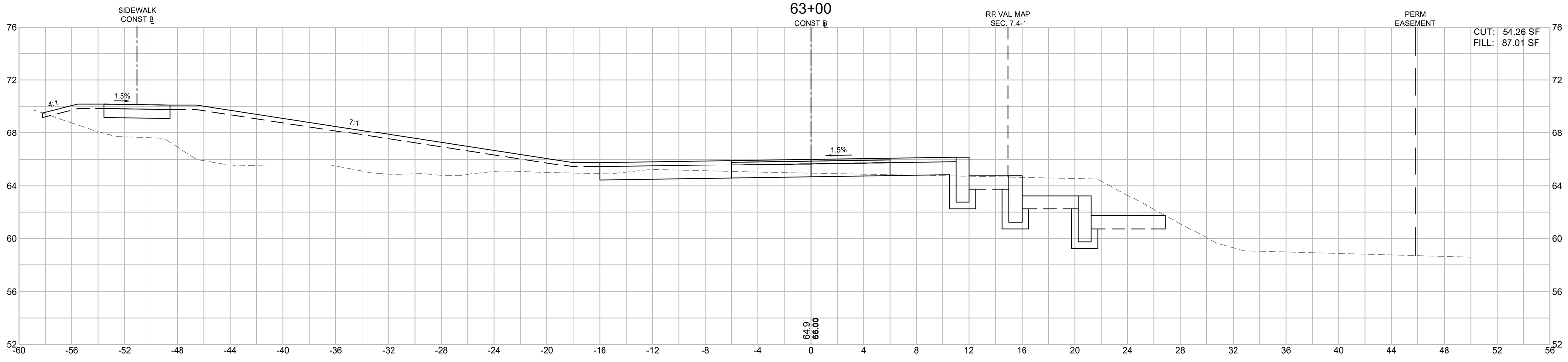

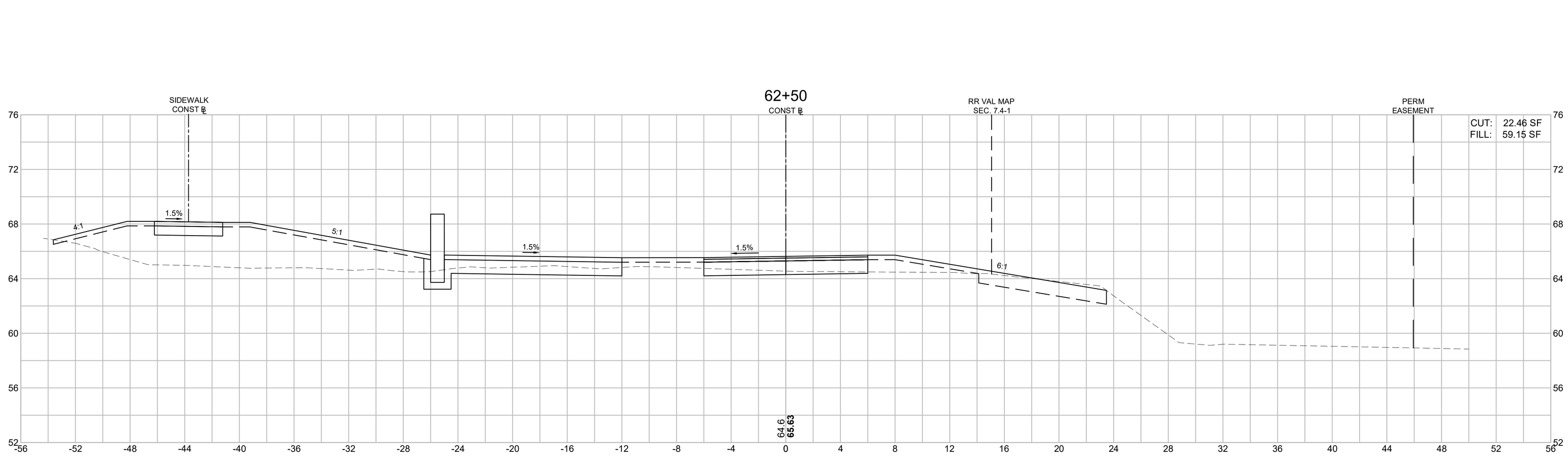

HOR. SCALE IN FEET
4 0 4 8
4 0 4 8
VER. SCALE IN FEET

FOR PERMITTING PURPOSES - NOT FOR CONSTRUCTION

608930_HD11(CROSS SECTIONS).DWG Plotted on 28-Oct-2022 9:24 AM

Proposal No. 608930-128034

A00869 - 210

608930_HD11(CROSS SECTIONS).DWG Plotted on 28-Oct-2022 9:24 AM

LAWRENCE
LMRC RAIL TRAIL

STATE	FED. AID PROJ. NO.	SHEET NO.	TOTAL SHEETS
MA	-	##	225
PROJECT FILE NO. 608903			

LMRC RAIL TRAIL
CROSS SECTIONS - 32 OF 65

HOR. SCALE IN FEET 8 4 0 4 8
VER. SCALE IN FEET 8 4 0 4 8

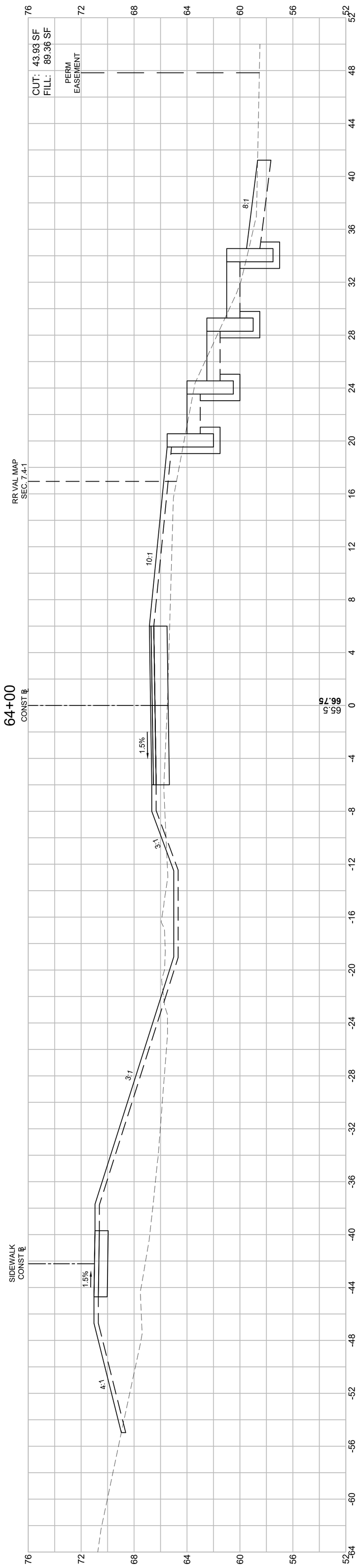

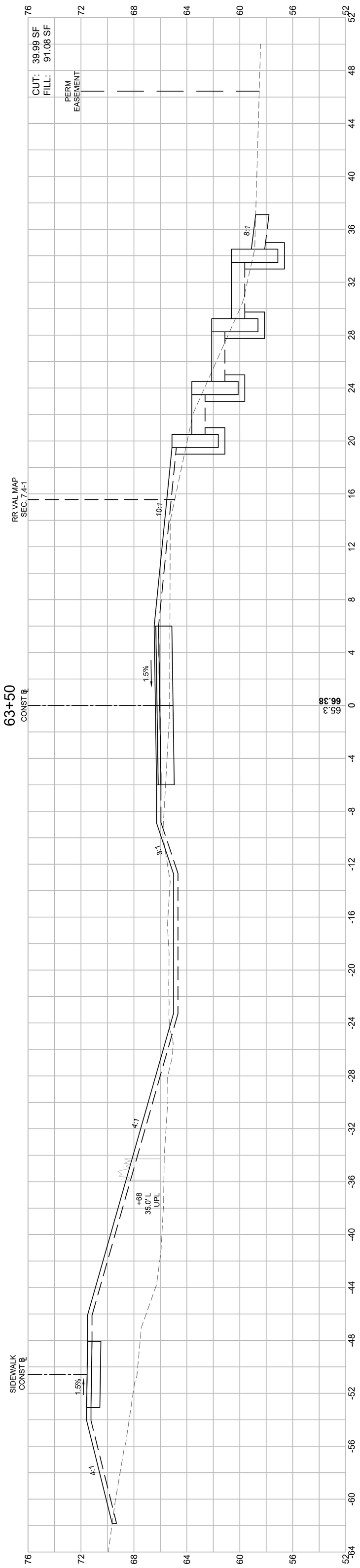

FOR PERMITTING PURPOSES - NOT FOR CONSTRUCTION

LAWRENCE
LMRC RAIL TRAIL

STATE	FED. AID PROJ. NO.	SHEET NO.	TOTAL SHEETS
MA	-	193	225
PROJECT FILE NO.	608903		

LMRC RAIL TRAIL
CROSS SECTIONS - 33 OF 65

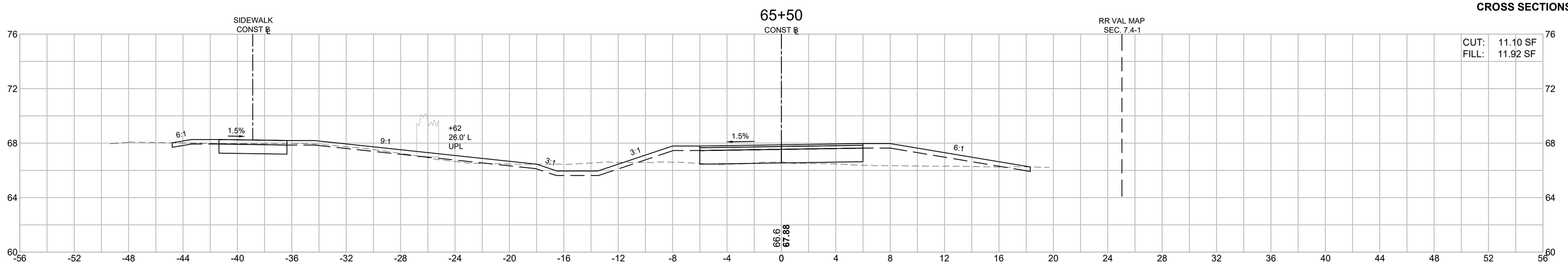

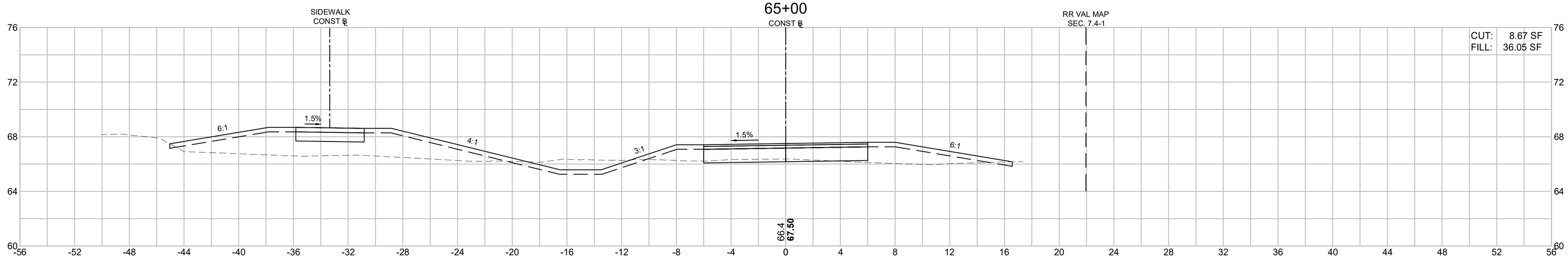

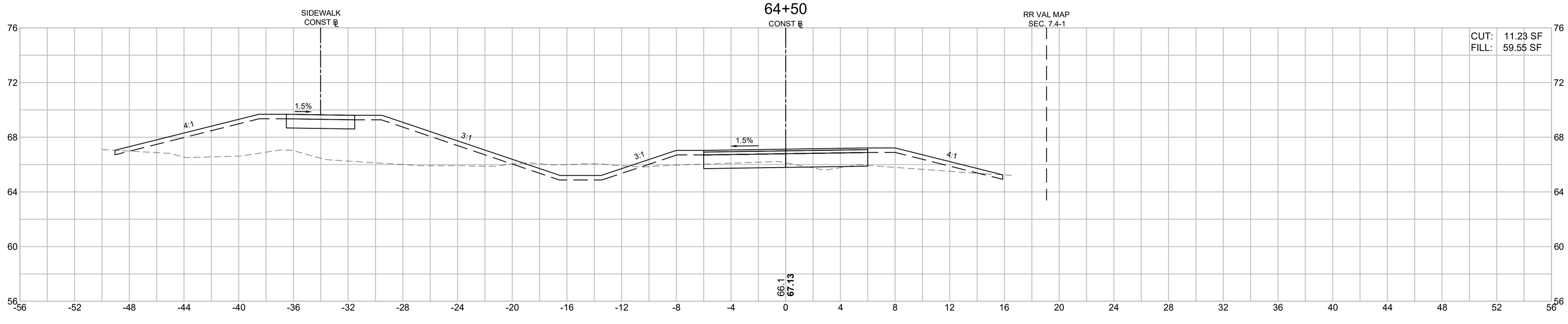

HOR. SCALE IN FEET
4 0 4 8
4 0 4 8
VER. SCALE IN FEET

FOR PERMITTING PURPOSES - NOT FOR CONSTRUCTION

608930_HD11(CROSS SECTIONS).DWG Plotted on 28-Oct-2022 9:25 AM

Proposal No. 608930-128034

A00869 - 212

LAWRENCE
LMRC RAIL TRAIL

STATE	FED. AID PROJ. NO.	SHEET NO.	TOTAL SHEETS
MA	-	194	225
PROJECT FILE NO.	608903		

LMRC RAIL TRAIL
CROSS SECTIONS - 34 OF 65

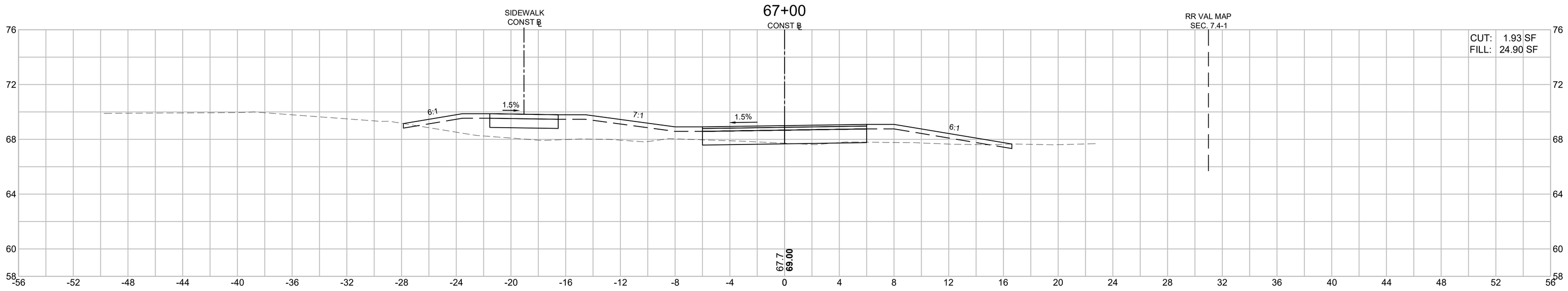

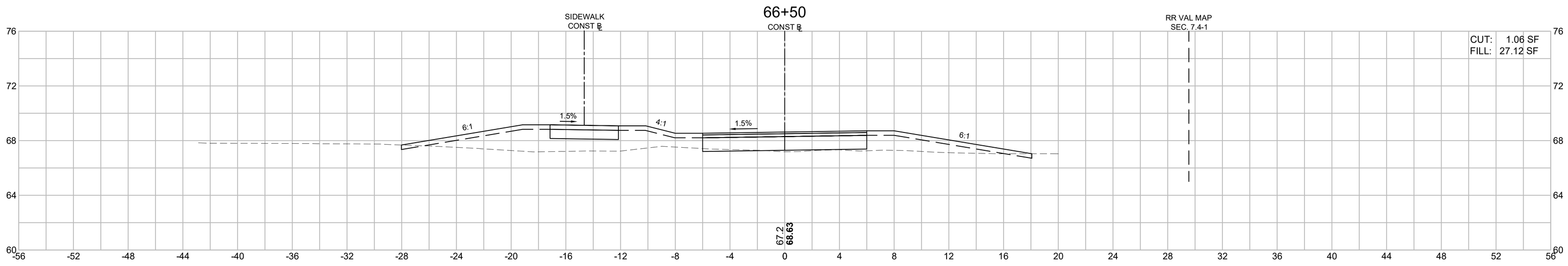

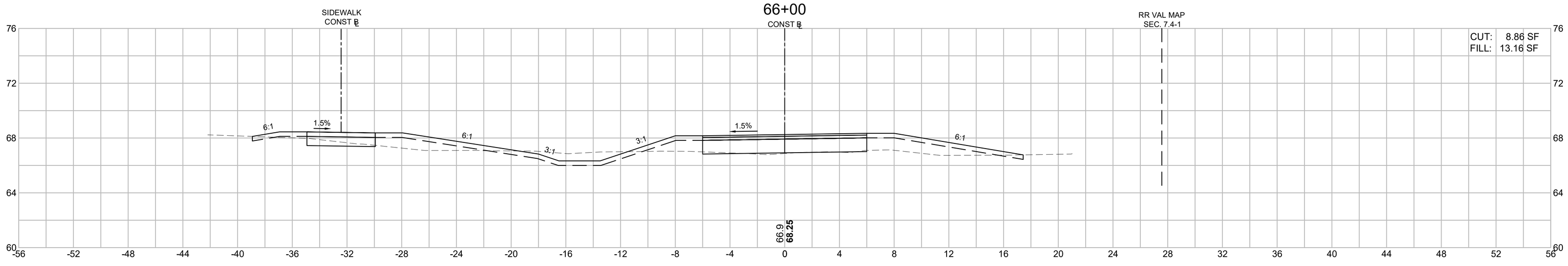

HOR. SCALE IN FEET
4 0 4 8
4 0 4 8
VER. SCALE IN FEET

FOR PERMITTING PURPOSES - NOT FOR CONSTRUCTION

608930_HD11(CROSS SECTIONS).DWG Plotted on 28-Oct-2022 9:25 AM

Proposal No. 608930-128034

A00869 - 213

608930_HD11(CROSS SECTIONS).DWG Plotted on 28-Oct-2022 9:25 AM

LAWRENCE
LMRC RAIL TRAIL

STATE	FED. AID PROJ. NO.	SHEET NO.	TOTAL SHEETS
MA	-	195	225
PROJECT FILE NO. 608903			

LMRC RAIL TRAIL
CROSS SECTIONS - 35 OF 65

HOR. SCALE IN FEET 4 0 4 8
VER. SCALE IN FEET 4 0 4 8

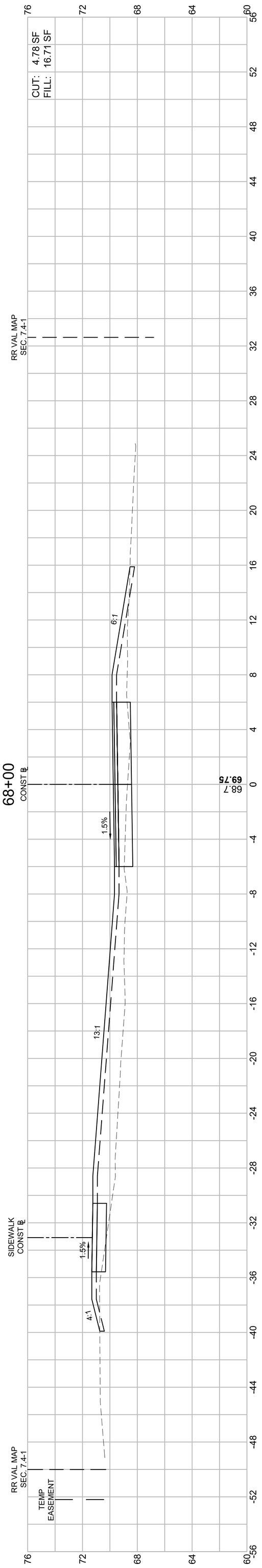

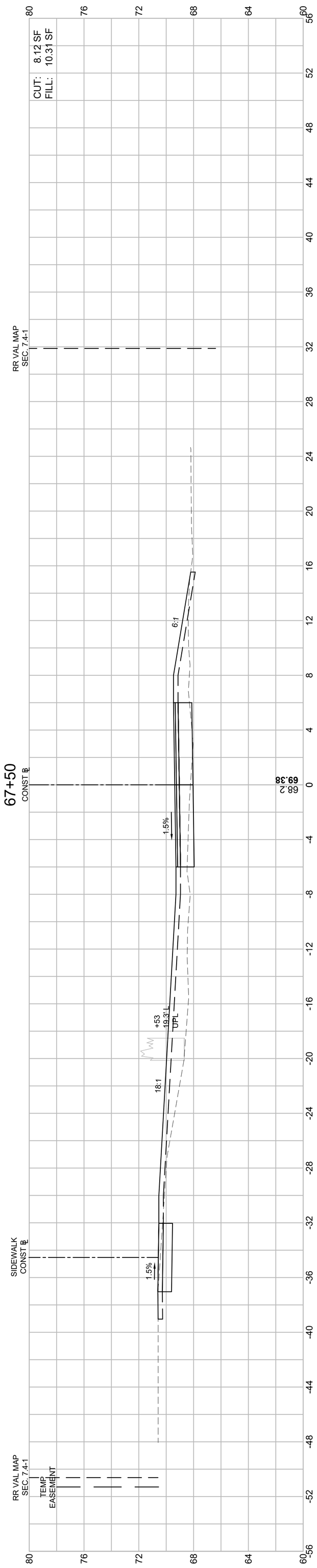

FOR PERMITTING PURPOSES - NOT FOR CONSTRUCTION

LAWRENCE
LMRC RAIL TRAIL

STATE	FED. AID PROJ. NO.	SHEET NO.	TOTAL SHEETS
MA	-	196	225
PROJECT FILE NO.	608903		

LMRC RAIL TRAIL
CROSS SECTIONS - 36 OF 65

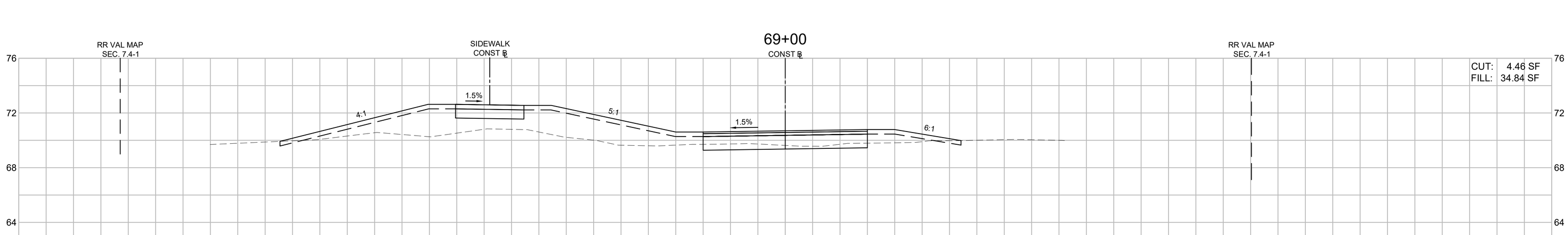

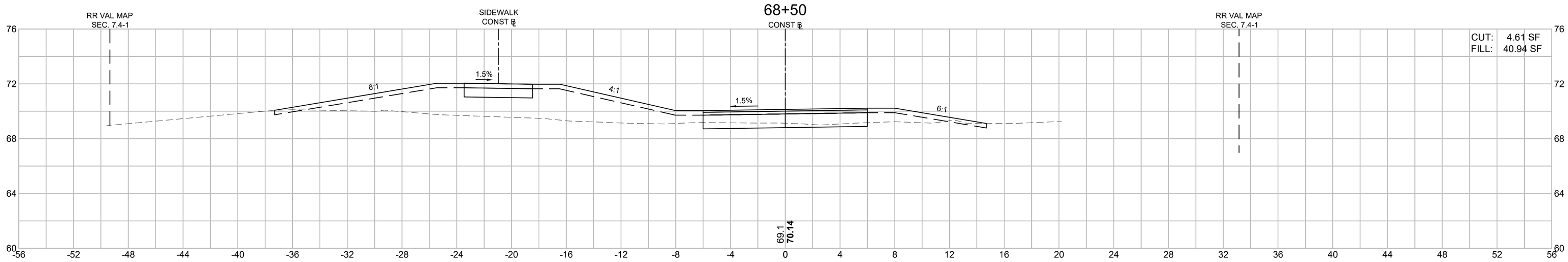

HOR. SCALE IN FEET
4 0 4 8
4 0 4 8
VER. SCALE IN FEET

FOR PERMITTING PURPOSES - NOT FOR CONSTRUCTION

608930_HD11\(CROSS SECTIONS).DWG Plotted on 28-Oct-2022 9:25 AM

Proposal No. 608930-128034

A00869 - 215

608930_HD11(CROSS SECTIONS).DWG Plotted on 28-Oct-2022 9:26 AM

LAWRENCE
LMRC RAIL TRAIL

STATE	FED. AID PROJ. NO.	SHEET NO.	TOTAL SHEETS
MA	-	197	225
PROJECT FILE NO. 608903			

LMRC RAIL TRAIL
CROSS SECTIONS - 37 OF 65

HOR. SCALE IN FEET 4 0 4 8
VER. SCALE IN FEET 4 0 4 8

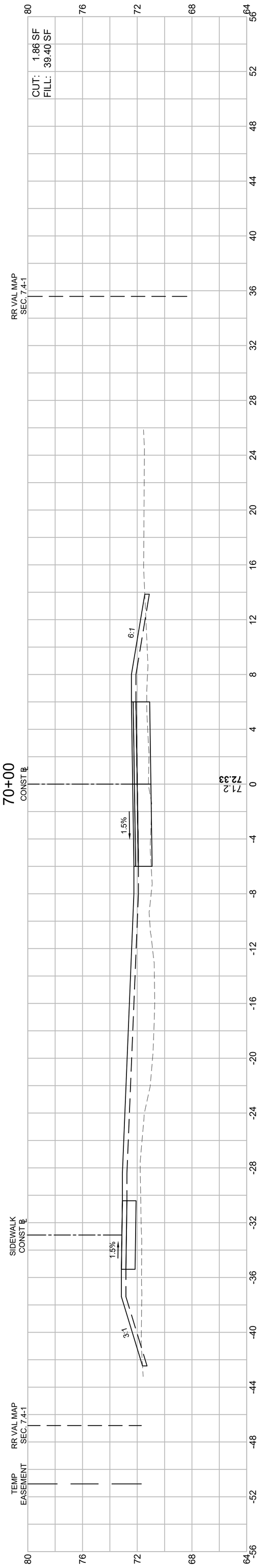

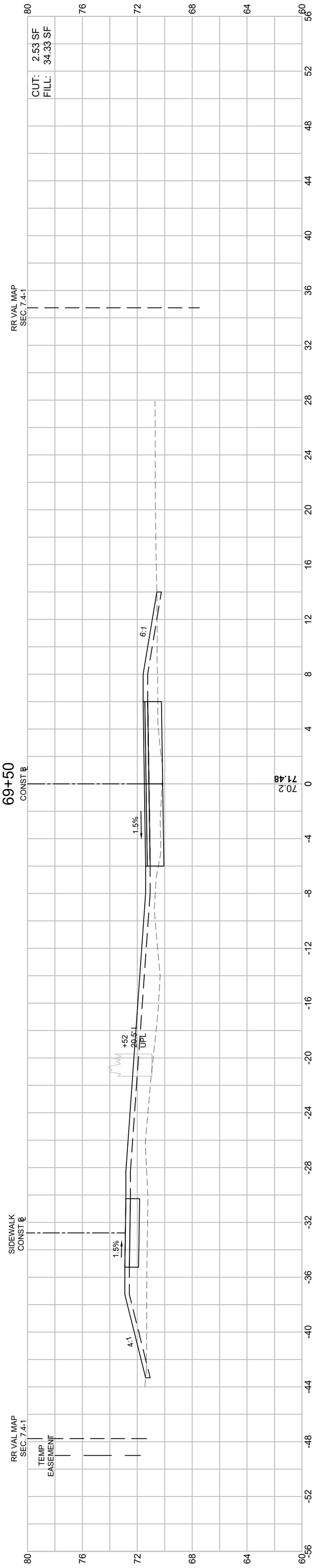

FOR PERMITTING PURPOSES - NOT FOR CONSTRUCTION

LAWRENCE
LMRC RAIL TRAIL

STATE	FED. AID PROJ. NO.	SHEET NO.	TOTAL SHEETS
MA	-	198	225
PROJECT FILE NO.	608903		

LMRC RAIL TRAIL
CROSS SECTIONS - 38 OF 65

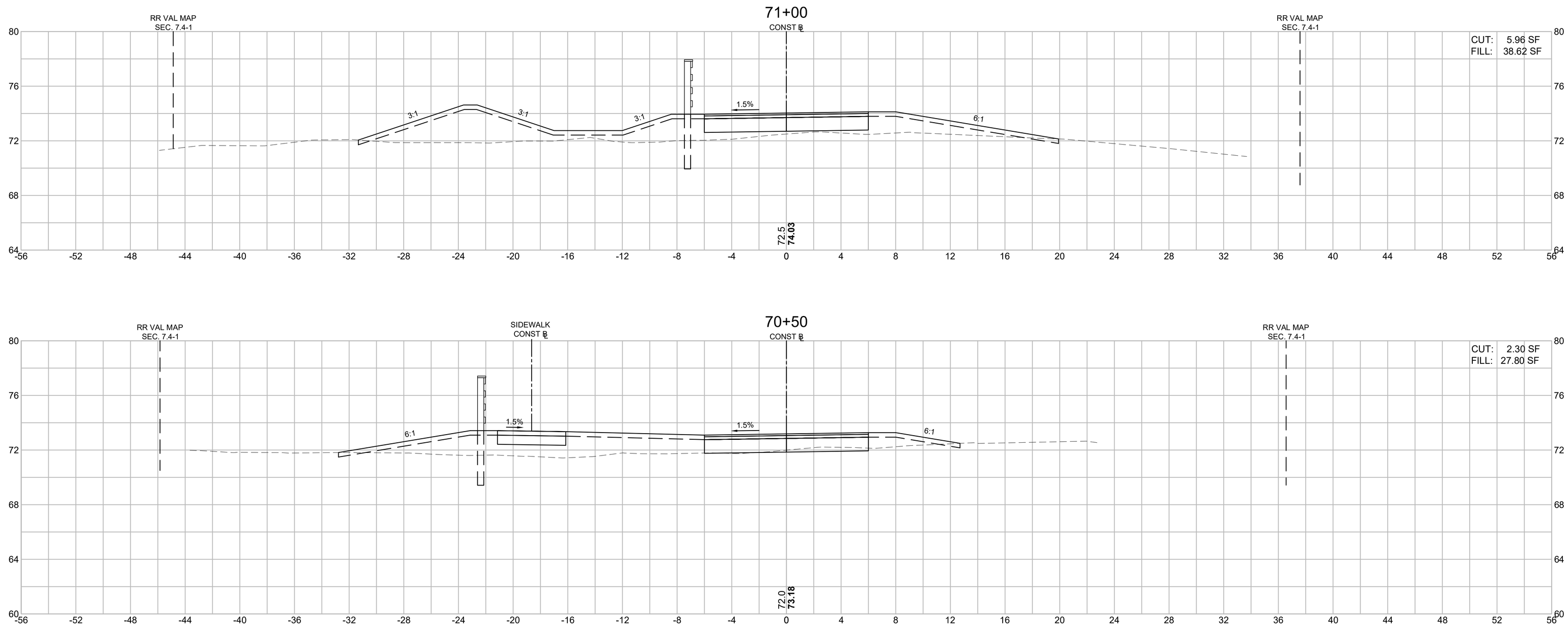

HOR. SCALE IN FEET
4 0 4 8
4 0 4 8
VER. SCALE IN FEET

FOR PERMITTING PURPOSES - NOT FOR CONSTRUCTION

A00869 - 217

Proposal No. 608930-128034

608930_HD11(CROSS SECTIONS).DWG Plotted on 28-Oct-2022 9:26 AM

LAWRENCE
LMRC RAIL TRAIL

STATE	FED. AID PROJ. NO.	SHEET NO.	TOTAL SHEETS
MA	-	199	225
PROJECT FILE NO.	608903		

LMRC RAIL TRAIL
CROSS SECTIONS - 39 OF 65

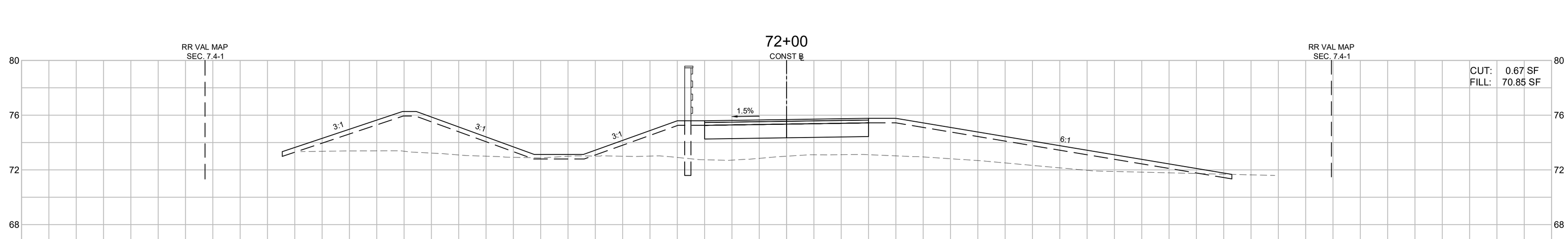

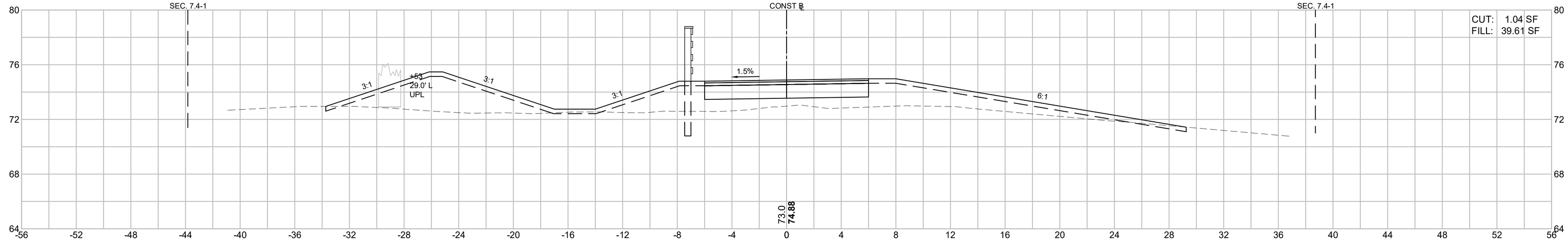

HOR. SCALE IN FEET
4 0 4 8
4 0 4 8
VER. SCALE IN FEET

FOR PERMITTING PURPOSES - NOT FOR CONSTRUCTION

608930_HD11(CROSS SECTIONS).DWG Plotted on 28-Oct-2022 9:26 AM

Proposal No. 608930-128034

A00869 - 218

LAWRENCE
LMRC RAIL TRAIL

STATE	FED. AID PROJ. NO.	SHEET NO.	TOTAL SHEETS
MA	-	200	225
PROJECT FILE NO.	608903		

LMRC RAIL TRAIL
CROSS SECTIONS - 40 OF 65

608930_HD11\(CROSS SECTIONS).DWG Plotted on 28-Oct-2022 9:26 AM

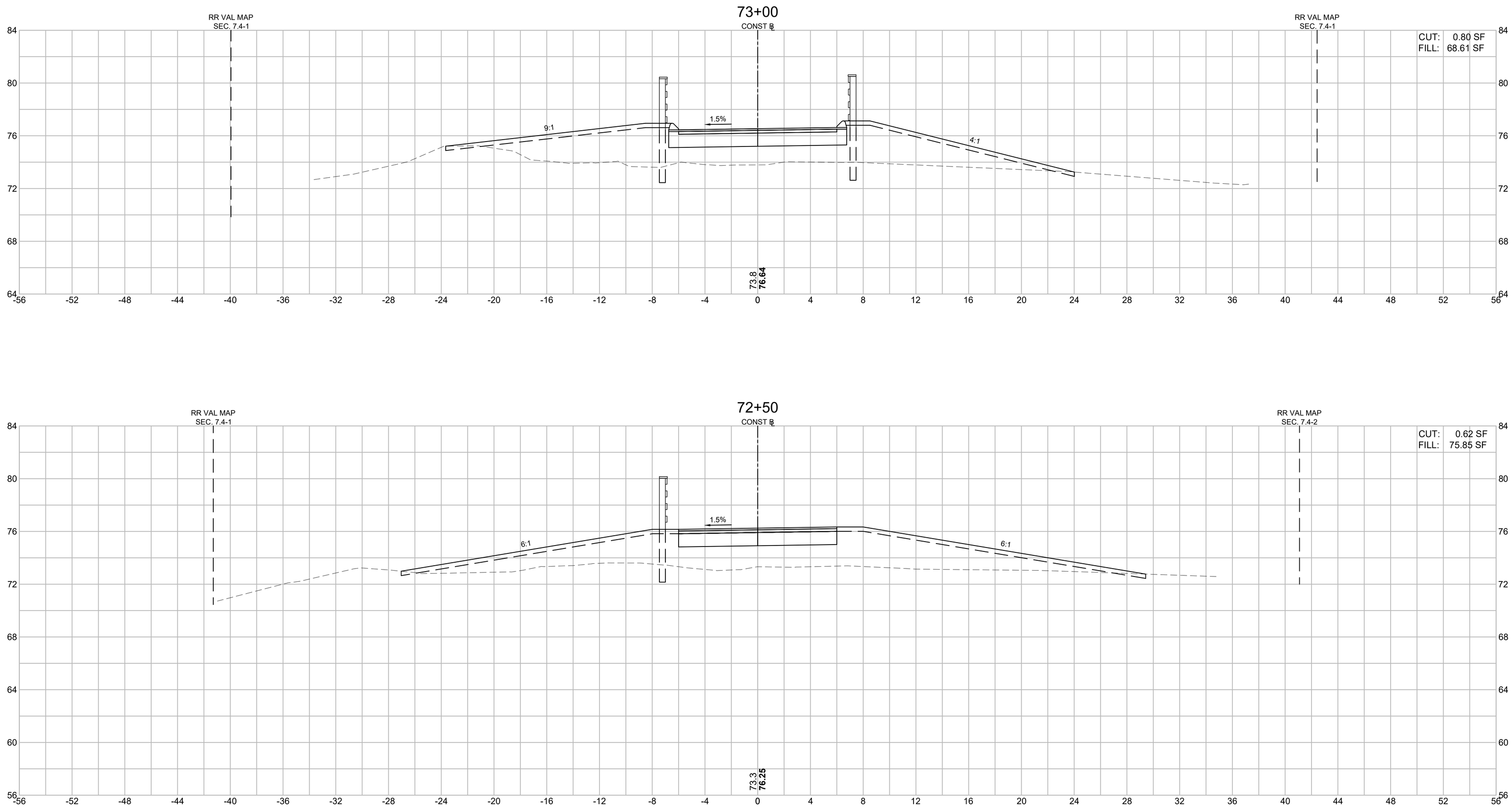

HOR. SCALE IN FEET
4 0 4 8
4 0 4 8
VER. SCALE IN FEET

FOR PERMITTING PURPOSES - NOT FOR CONSTRUCTION

A00869 - 219

Proposal No. 608930-128034

608930_HD11(CROSS SECTIONS).DWG Plotted on 28-Oct-2022 9:27 AM

LAWRENCE
LMRC RAIL TRAIL

STATE	FED. AID PROJ. NO.	SHEET NO.	TOTAL SHEETS
MA	-	201	225
	PROJECT FILE NO. 608903		

LMRC RAIL TRAIL
CROSS SECTIONS - 41 OF 65

HOR. SCALE IN FEET 4 0 4 8
VER. SCALE IN FEET 4 0 4 8

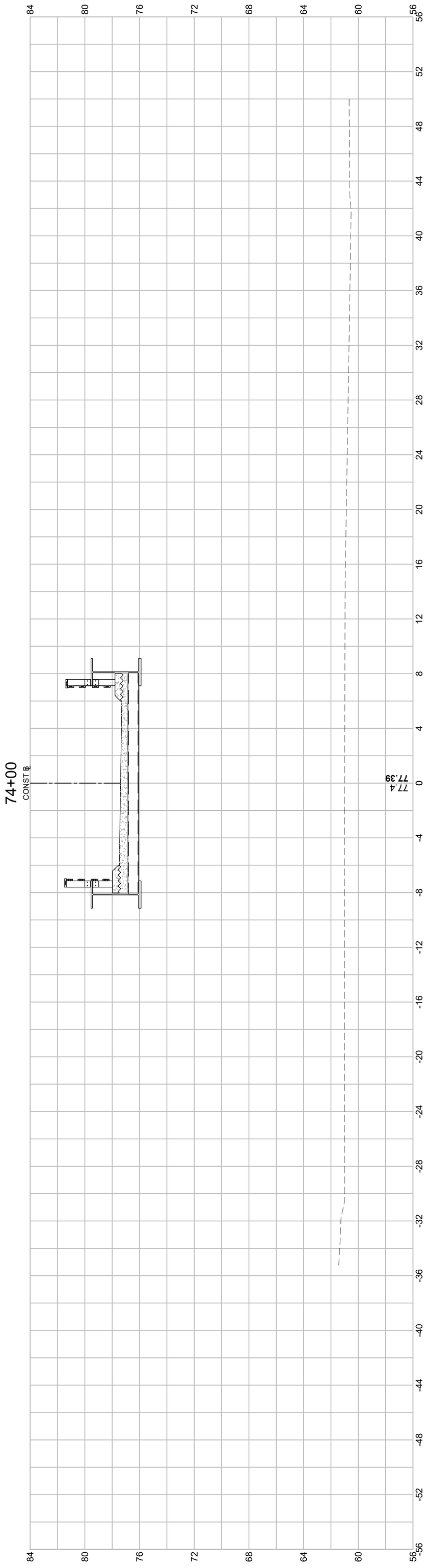

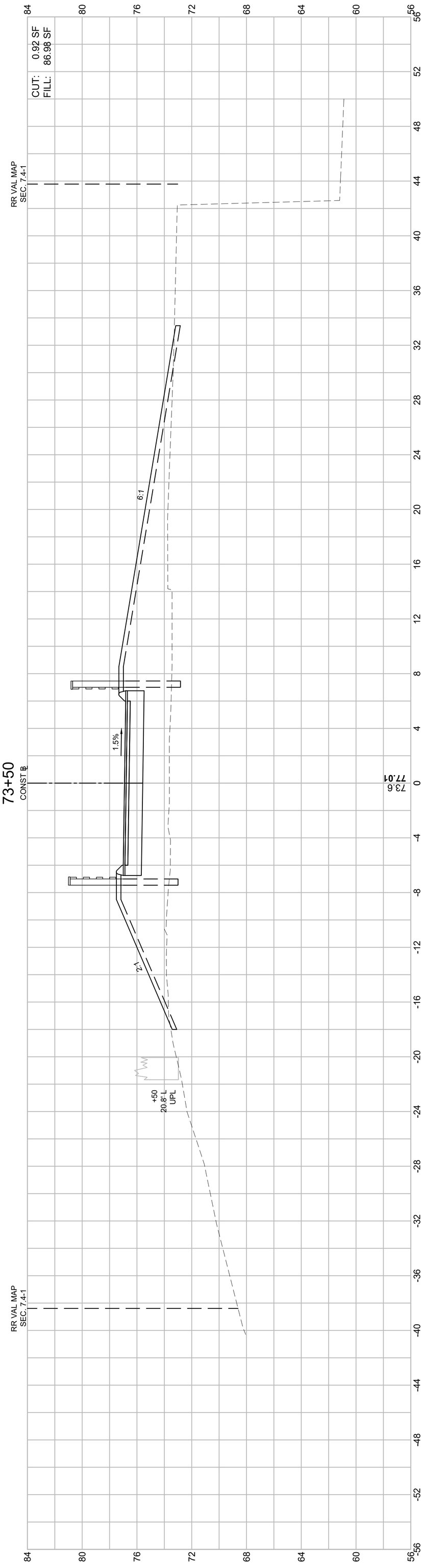

FOR PERMITTING PURPOSES - NOT FOR CONSTRUCTION

LAWRENCE
LMRC RAIL TRAIL

STATE	FED. AID PROJ. NO.	SHEET NO.	TOTAL SHEETS
MA	-	202	225
PROJECT FILE NO.	608903		

LMRC RAIL TRAIL
CROSS SECTIONS - 42 OF 65

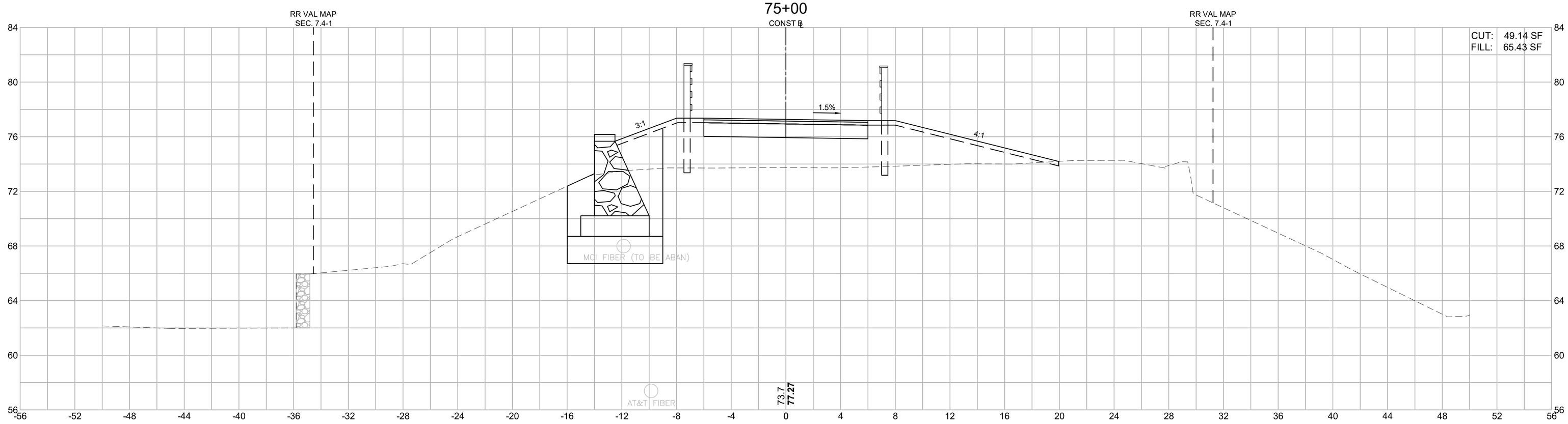

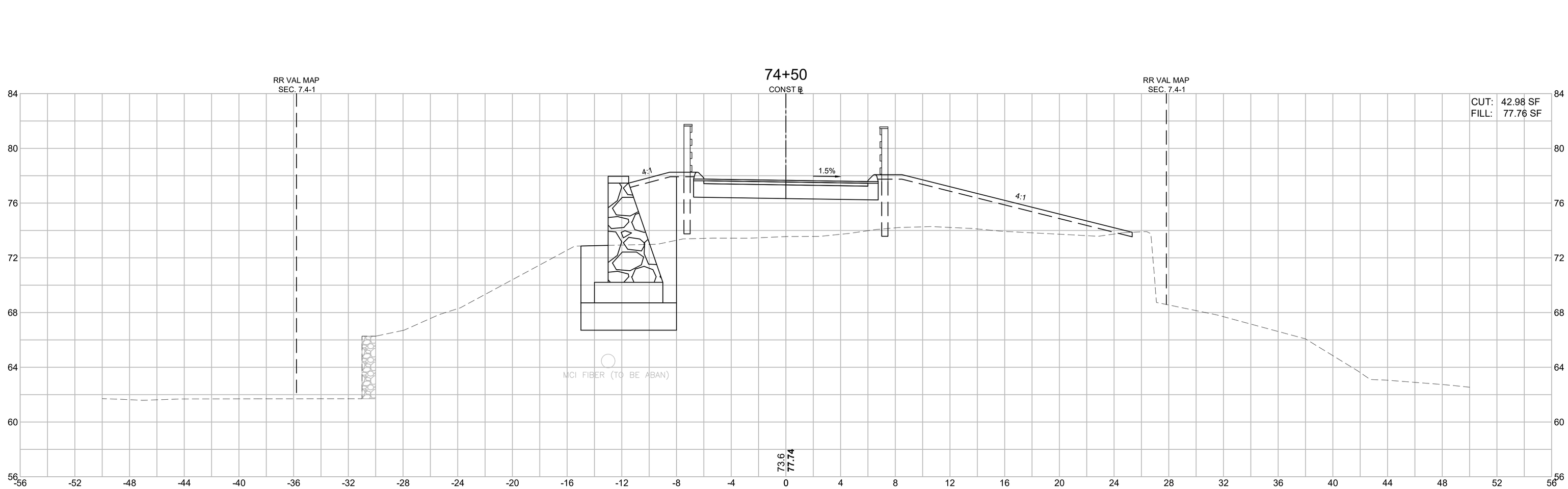

HOR. SCALE IN FEET
4 0 4 8
VER. SCALE IN FEET
4 0 4 8

FOR PERMITTING PURPOSES - NOT FOR CONSTRUCTION

608930_HD11\CROSS SECTIONS).DWG Plotted on 28-Oct-2022 9:27 AM

Proposal No. 608930-128034

608930_HD11(CROSS SECTIONS).DWG Plotted on 28-Oct-2022 9:27 AM

LAWRENCE
LMRC RAIL TRAIL

STATE	FED. AID PROJ. NO.	SHEET NO.	TOTAL SHEETS
MA	-	203	225
	PROJECT FILE NO. 608903		

LMRC RAIL TRAIL
CROSS SECTIONS - 43 OF 65

HOR. SCALE IN FEET 4 0 4 8
VER. SCALE IN FEET 4 0 4 8

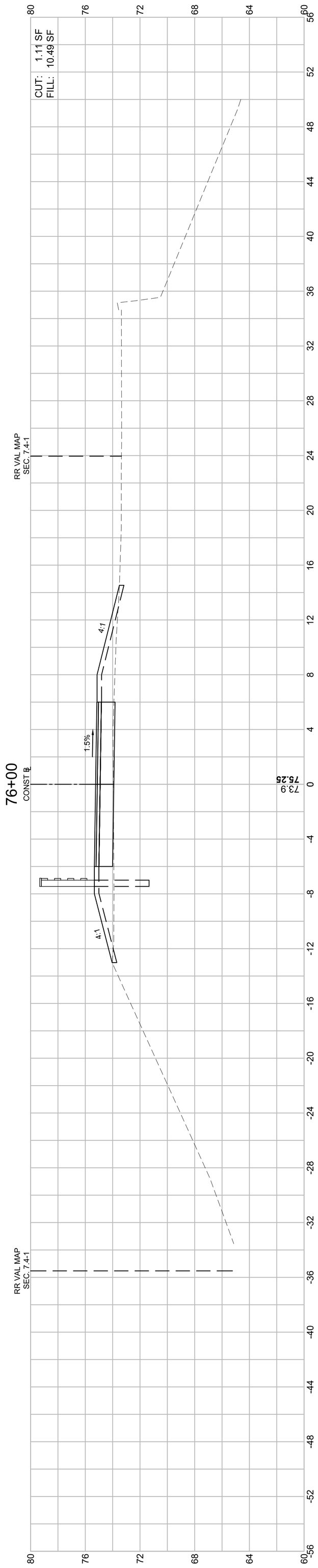

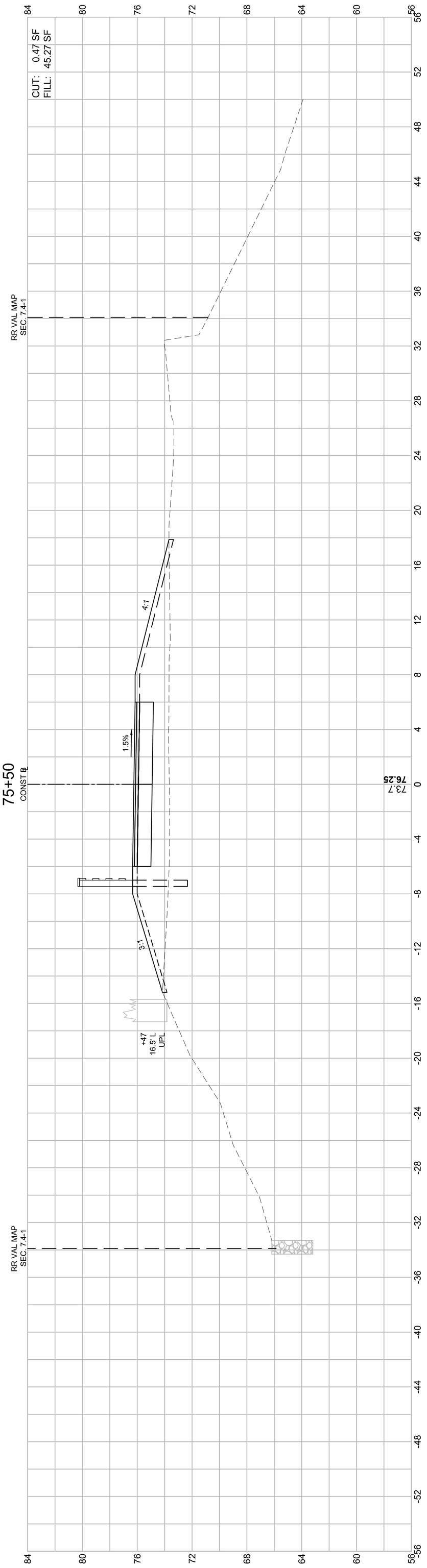

FOR PERMITTING PURPOSES - NOT FOR CONSTRUCTION

LAWRENCE
LMRC RAIL TRAIL

STATE	FED. AID PROJ. NO.	SHEET NO.	TOTAL SHEETS
MA	-	204	225
PROJECT FILE NO.	608903		

LMRC RAIL TRAIL
CROSS SECTIONS - 44 OF 65

608930_HD11(CROSS SECTIONS).DWG Plotted on 28-Oct-2022 9:27 AM

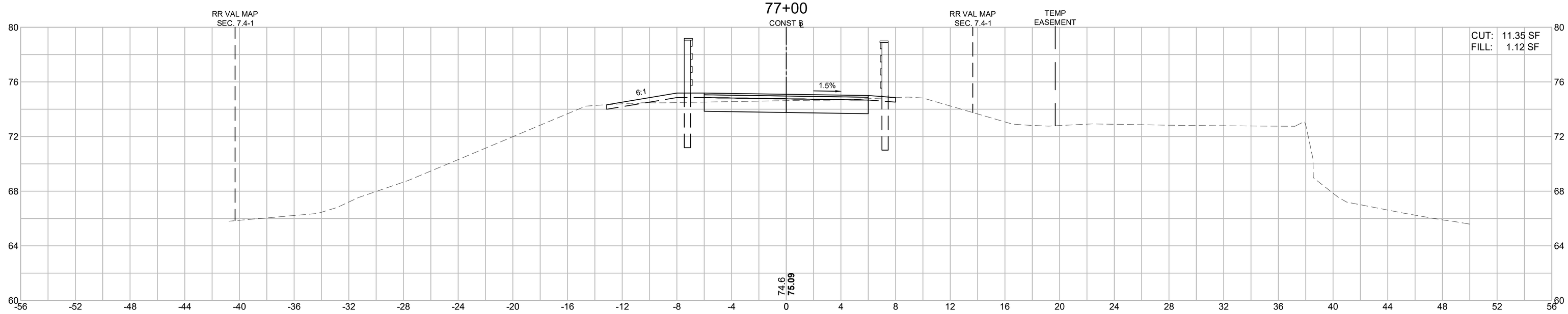

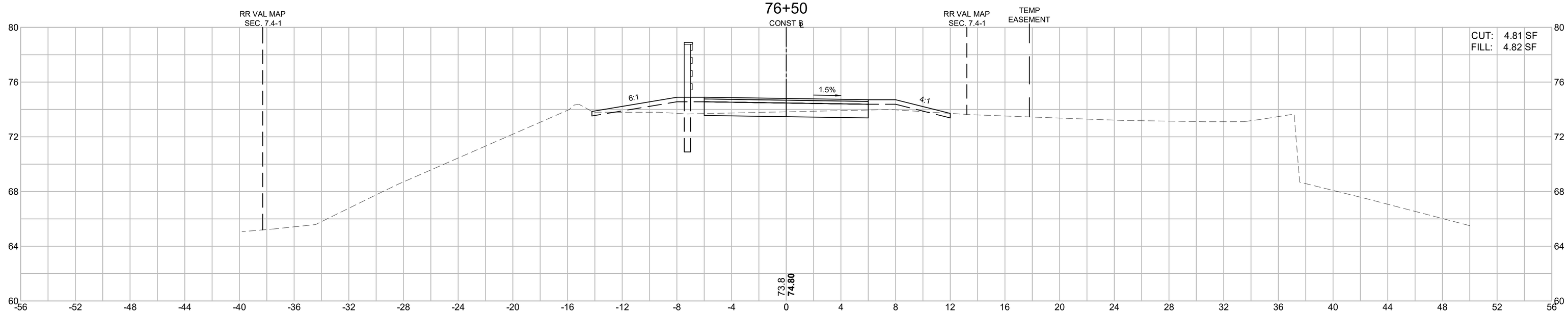

HOR. SCALE IN FEET
4 0 4 8
VER. SCALE IN FEET
4 0 4 8

FOR PERMITTING PURPOSES - NOT FOR CONSTRUCTION

A00869 - 223

Proposal No. 608930-128034

LAWRENCE
LMRC RAIL TRAIL

STATE	FED. AID PROJ. NO.	SHEET NO.	TOTAL SHEETS
MA	-	205	225
PROJECT FILE NO.	608903		

LMRC RAIL TRAIL
CROSS SECTIONS - 45 OF 65

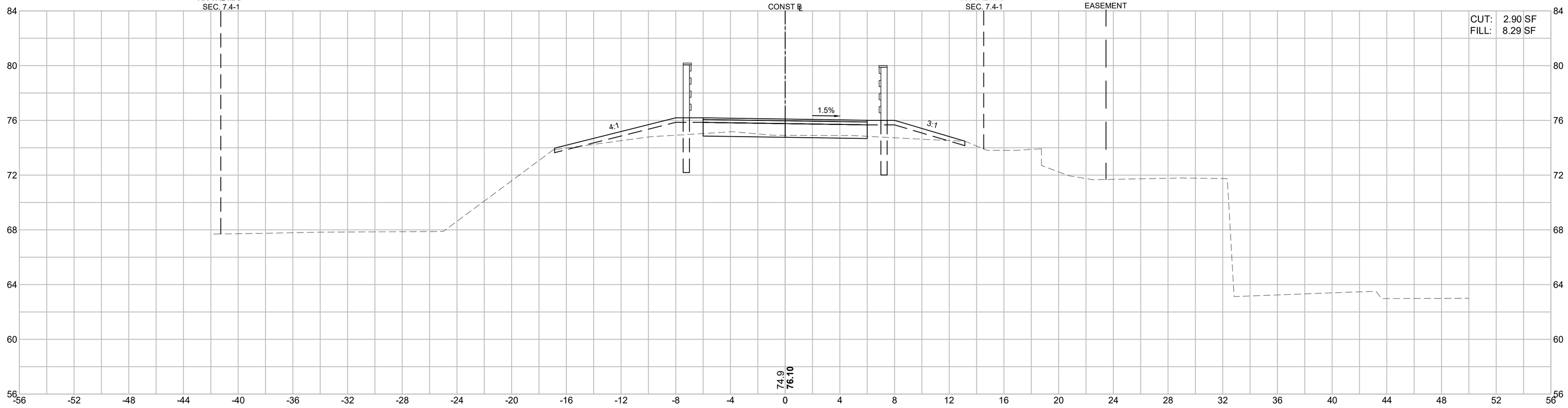

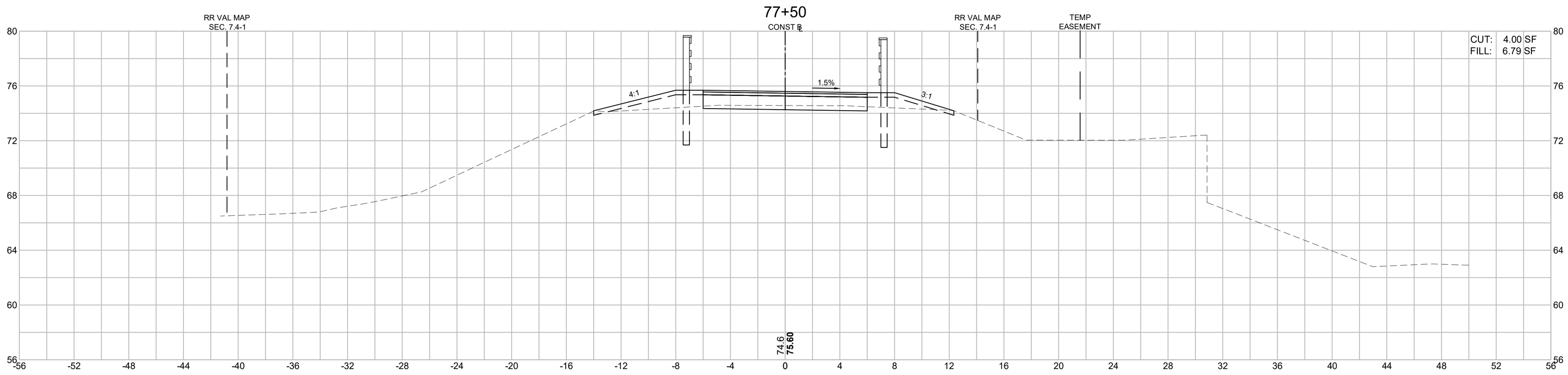

HOR. SCALE IN FEET
4 0 4 8
4 0 4 8
VER. SCALE IN FEET

FOR PERMITTING PURPOSES - NOT FOR CONSTRUCTION

608930_HD11(CROSS SECTIONS).DWG Plotted on 28-Oct-2022 9:28 AM

Proposal No. 608930-128034

A00869 - 224

608930_HD11(CROSS SECTIONS).DWG Plotted on 28-Oct-2022 9:28 AM

LAWRENCE
LMRC RAIL TRAIL

STATE	FED. AID PROJ. NO.	SHEET NO.	TOTAL SHEETS
MA	-	206	225
PROJECT FILE NO. 608903			

LMRC RAIL TRAIL
CROSS SECTIONS - 46 OF 65

HOR. SCALE IN FEET 4 0 4 8
VER. SCALE IN FEET 4 0 4 8

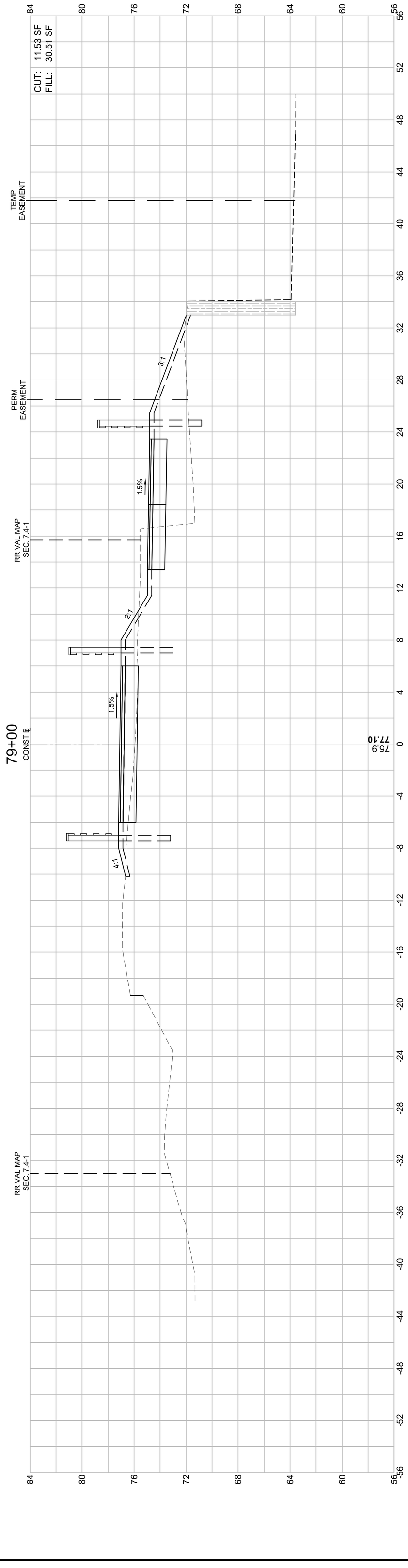

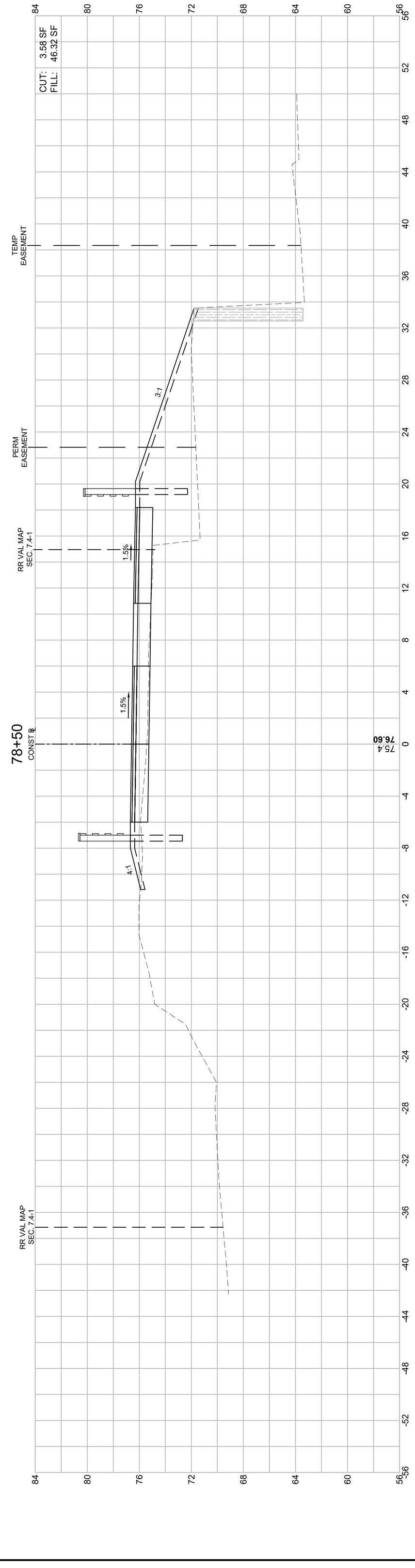

FOR PERMITTING PURPOSES - NOT FOR CONSTRUCTION

608930_HD11(CROSS SECTIONS).DWG Plotted on 28-Oct-2022 9:28 AM

LAWRENCE
LMRC RAIL TRAIL

STATE	FED. AID PROJ. NO.	SHEET NO.	TOTAL SHEETS
MA	-	207	225
PROJECT FILE NO. 608903			

LMRC RAIL TRAIL
CROSS SECTIONS - 47 OF 65

HOR. SCALE IN FEET 8 4 0 4 8
VER. SCALE IN FEET 4 0 4

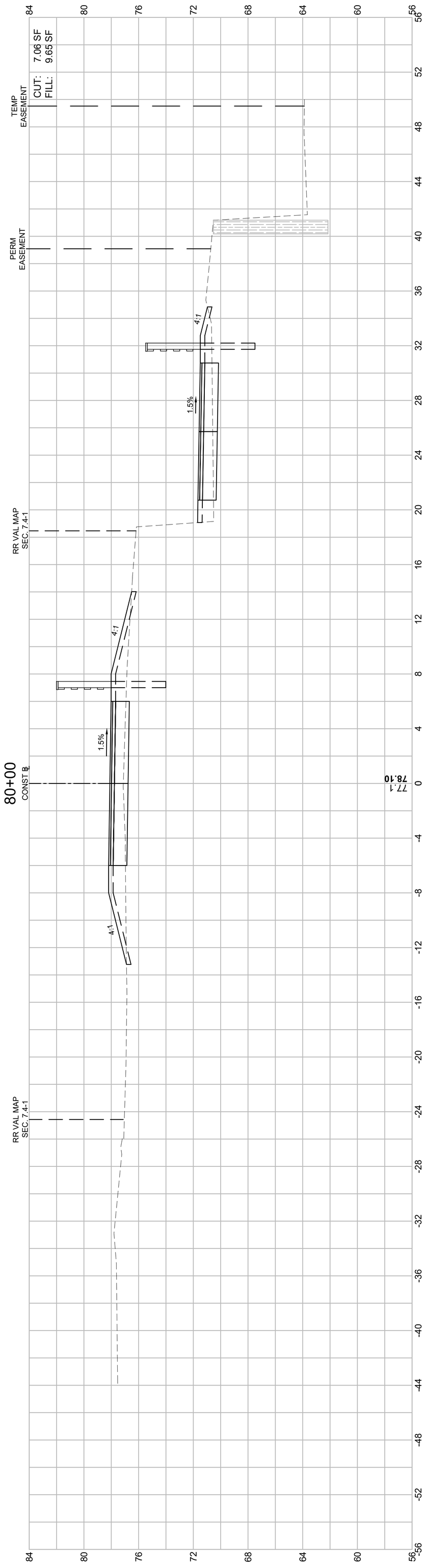

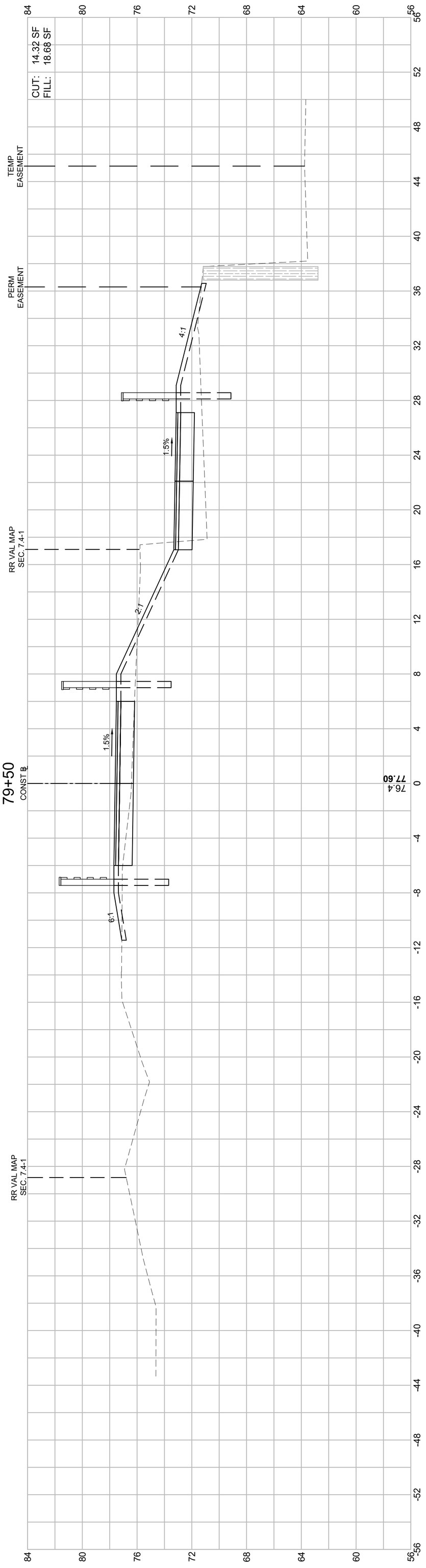

FOR PERMITTING PURPOSES - NOT FOR CONSTRUCTION

LAWRENCE
LMRC RAIL TRAIL

STATE	FED. AID PROJ. NO.	SHEET NO.	TOTAL SHEETS
MA	-	208	225
PROJECT FILE NO.	608903		

LMRC RAIL TRAIL
CROSS SECTIONS - 48 OF 65

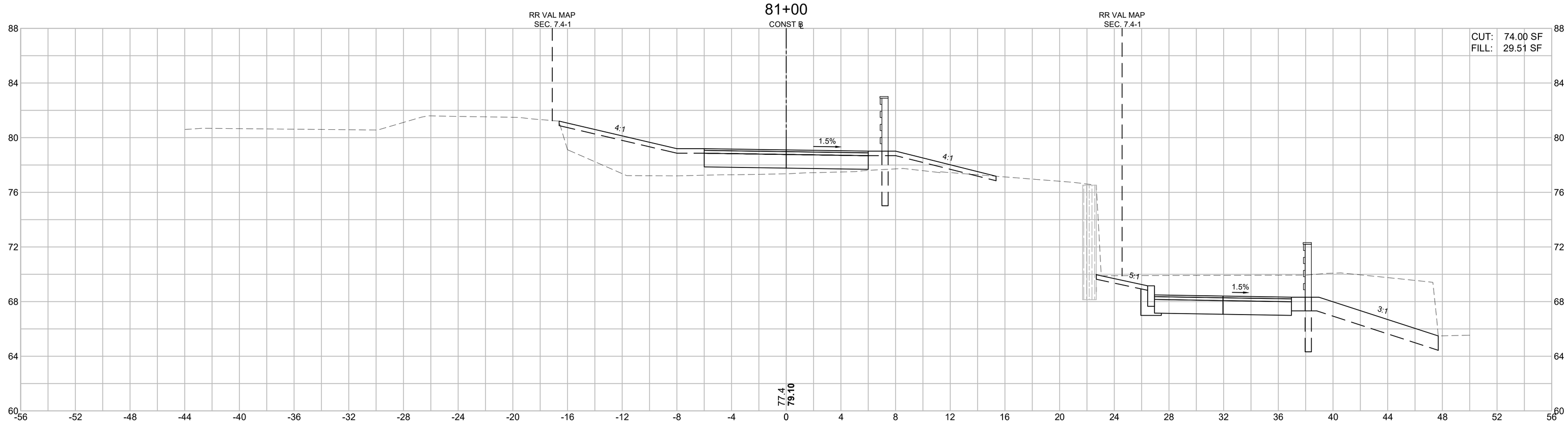

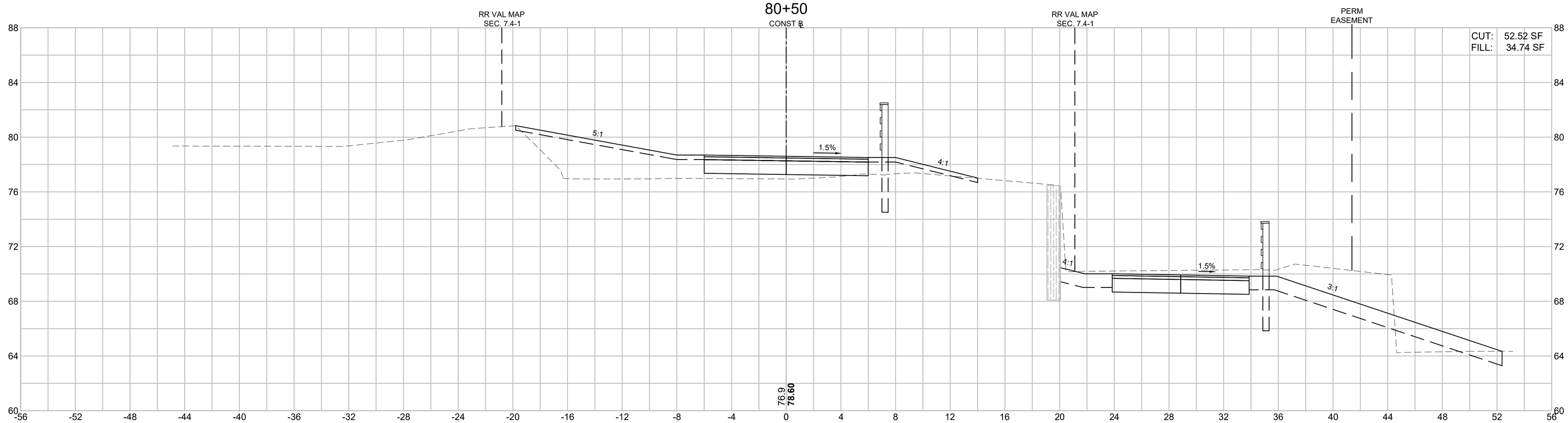

HOR. SCALE IN FEET
4 0 4 8
4 0 4 8
VER. SCALE IN FEET

FOR PERMITTING PURPOSES - NOT FOR CONSTRUCTION

608930_HD11(CROSS SECTIONS).DWG Plotted on 28-Oct-2022 9:28 AM

Proposal No. 608930-128034

A00869 - 227

LAWRENCE
LMRC RAIL TRAIL

STATE	FED. AID PROJ. NO.	SHEET NO.	TOTAL SHEETS
MA	-	209	225
PROJECT FILE NO.	608903		

LMRC RAIL TRAIL
CROSS SECTIONS - 49 OF 65

608930_HD11(CROSS SECTIONS).DWG Plotted on 28-Oct-2022 9:29 AM

Proposal No. 608930-128034

A00869 - 228

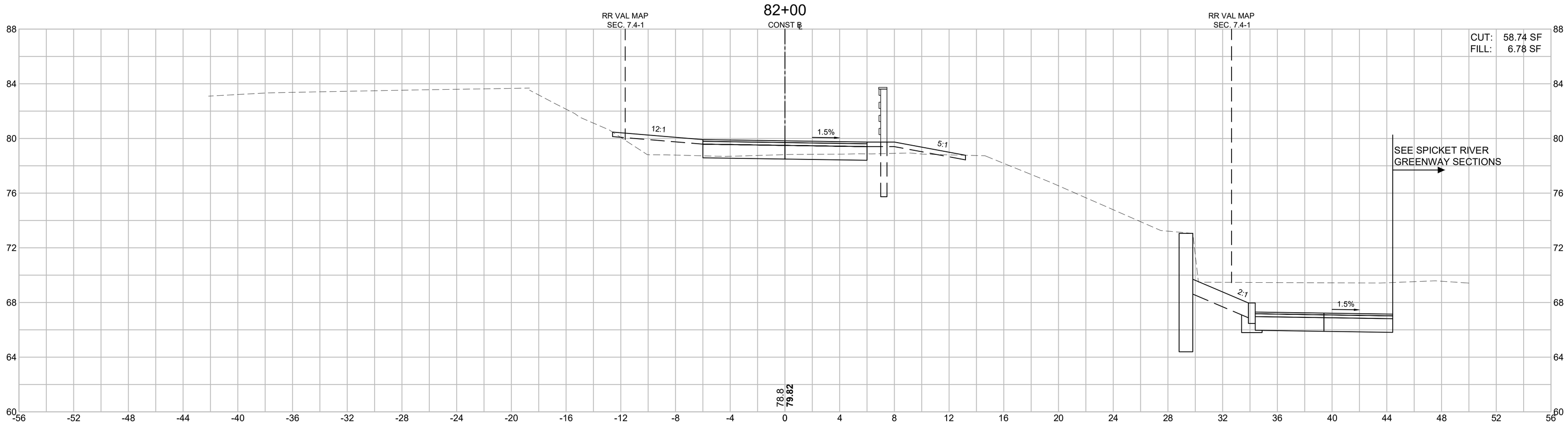

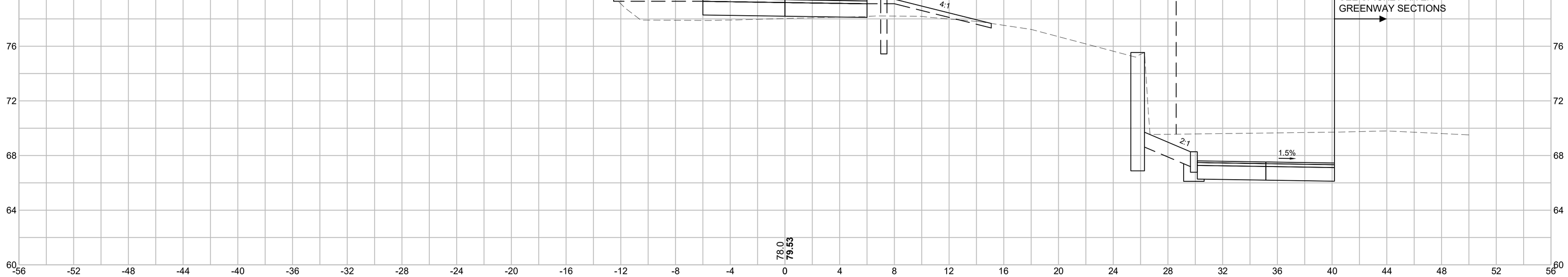

HOR. SCALE IN FEET
4 0 4 8
4 0 4 8
VER. SCALE IN FEET

FOR PERMITTING PURPOSES - NOT FOR CONSTRUCTION

LAWRENCE
LMRC RAIL TRAIL

STATE	FED. AID PROJ. NO.	SHEET NO.	TOTAL SHEETS
MA	-	210	225
PROJECT FILE NO.	608903		

LMRC RAIL TRAIL
CROSS SECTIONS - 50 OF 65

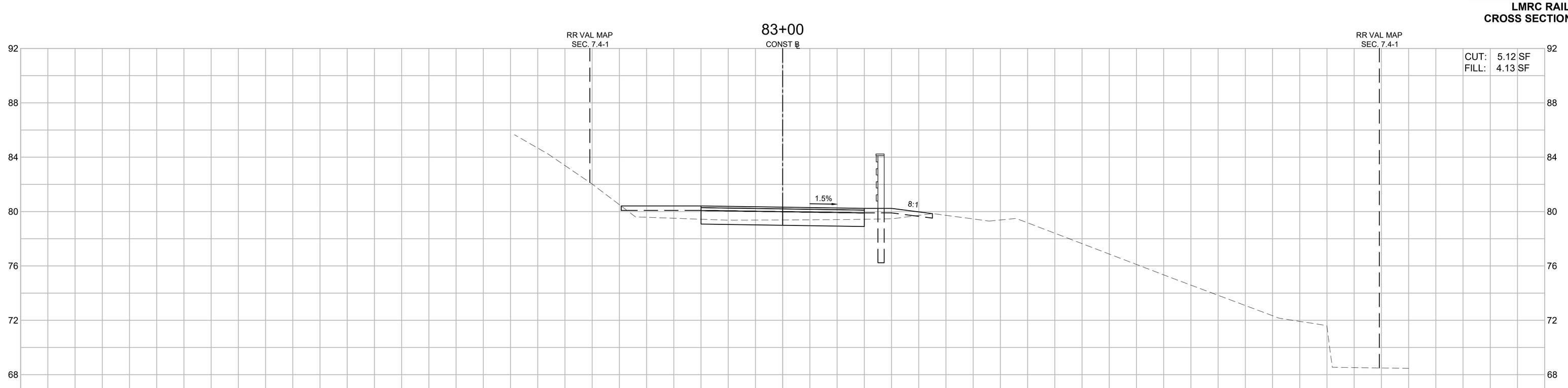

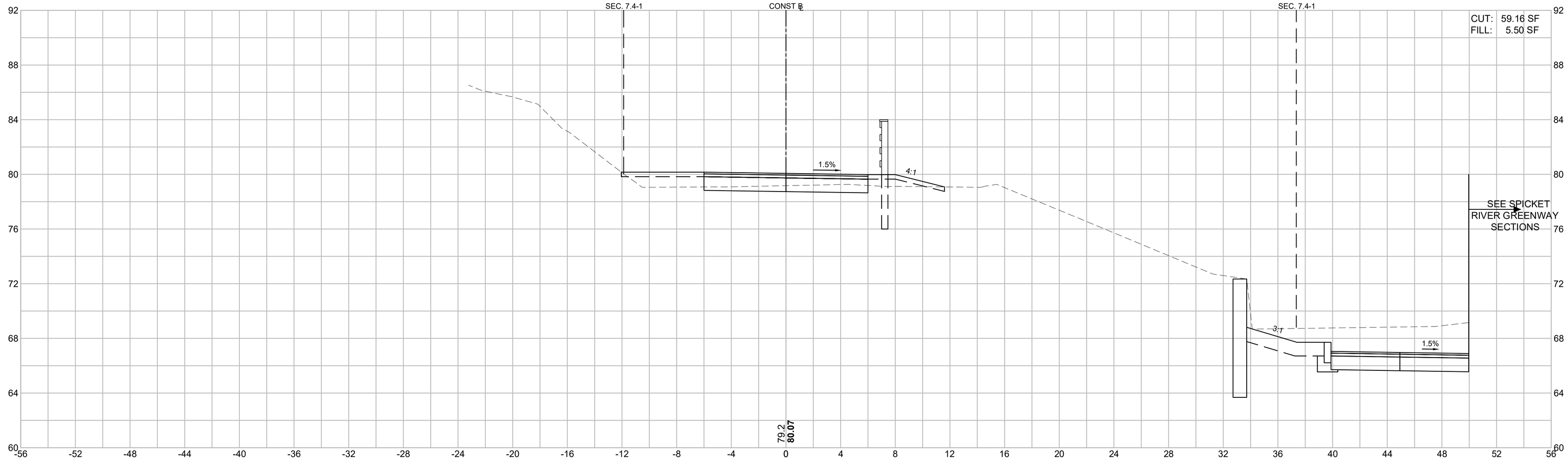

HOR. SCALE IN FEET
4 0 4 8
4 0 4 8
VER. SCALE IN FEET

FOR PERMITTING PURPOSES - NOT FOR CONSTRUCTION

A00869 - 229

608930_HD11(CROSS SECTIONS).DWG Plotted on 28-Oct-2022 9:29 AM

Proposal No. 608930-128034

LAWRENCE
LMRC RAIL TRAIL

STATE	FED. AID PROJ. NO.	SHEET NO.	TOTAL SHEETS
MA	-	211	225
PROJECT FILE NO.	608903		

LMRC RAIL TRAIL
CROSS SECTIONS - 51 OF 65

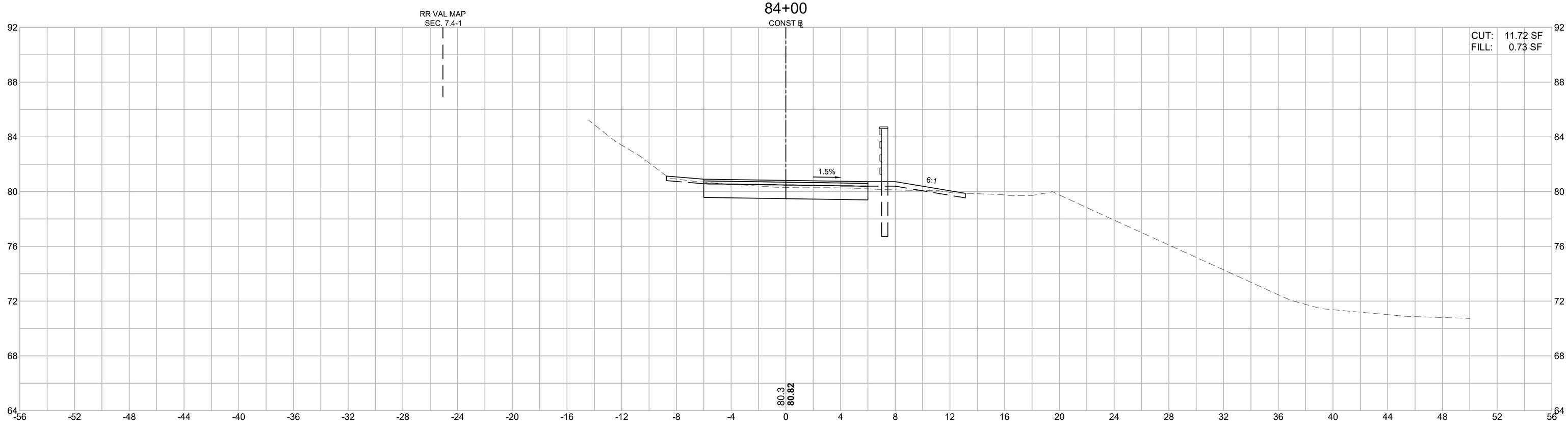

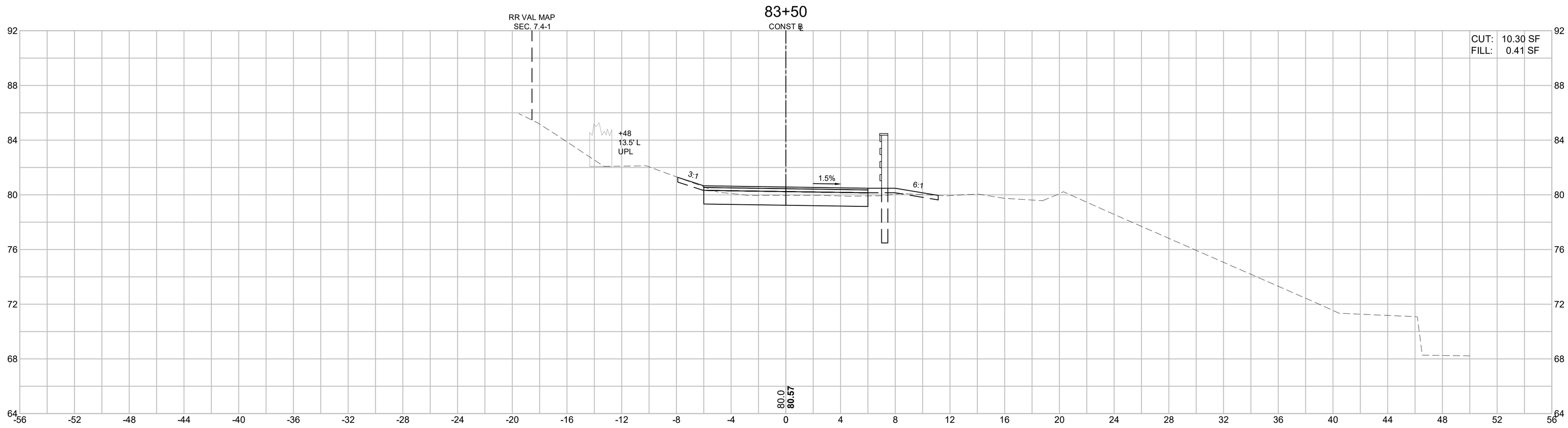

HOR. SCALE IN FEET
4 0 4 8
4 0 4 8
VER. SCALE IN FEET

FOR PERMITTING PURPOSES - NOT FOR CONSTRUCTION

608930_HD11(CROSS SECTIONS).DWG Plotted on 28-Oct-2022 9:29 AM

Proposal No. 608930-128034

A00869 - 230

LAWRENCE
LMRC RAIL TRAIL

STATE	FED. AID PROJ. NO.	SHEET NO.	TOTAL SHEETS
MA	-	212	225
PROJECT FILE NO.	608903		

LMRC RAIL TRAIL
CROSS SECTIONS - 52 OF 65

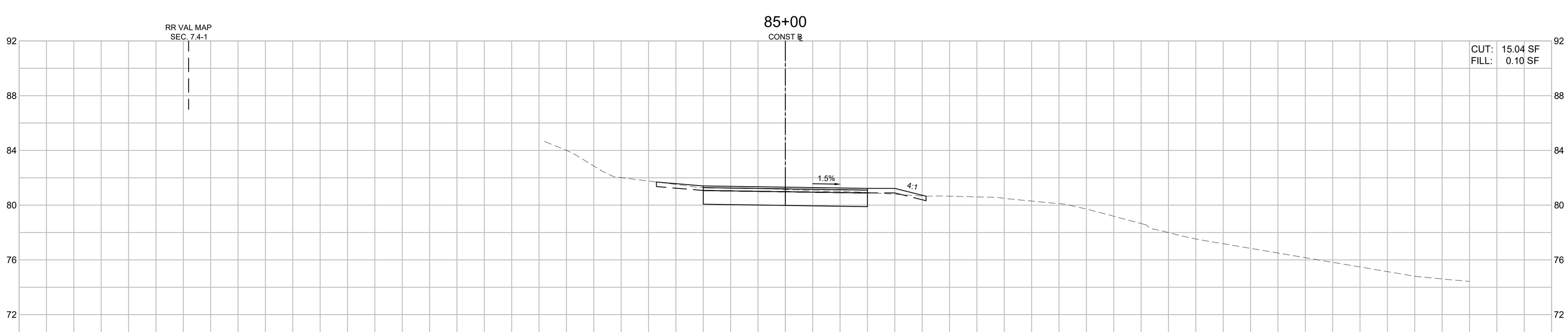

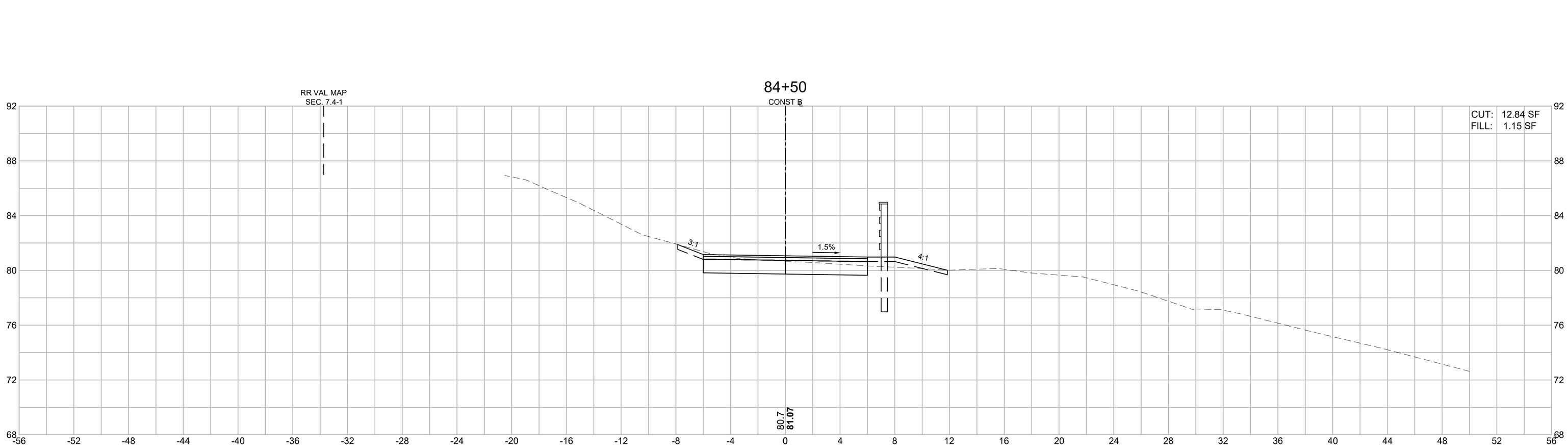

HOR. SCALE IN FEET
4 0 4 8
4 0 4 8
VER. SCALE IN FEET

FOR PERMITTING PURPOSES - NOT FOR CONSTRUCTION

608930_HD11(CROSS SECTIONS).DWG Plotted on 28-Oct-2022 9:29 AM

Proposal No. 608930-128034

A00869 - 231

LAWRENCE
LMRC RAIL TRAIL

STATE	FED. AID PROJ. NO.	SHEET NO.	TOTAL SHEETS
MA	-	213	225
PROJECT FILE NO.	608903		

LMRC RAIL TRAIL
CROSS SECTIONS - 53 OF 65

Plotted on 28-Oct-2022 9:30 AM
608930_HD11\(CROSS SECTIONS).DWG

86+50

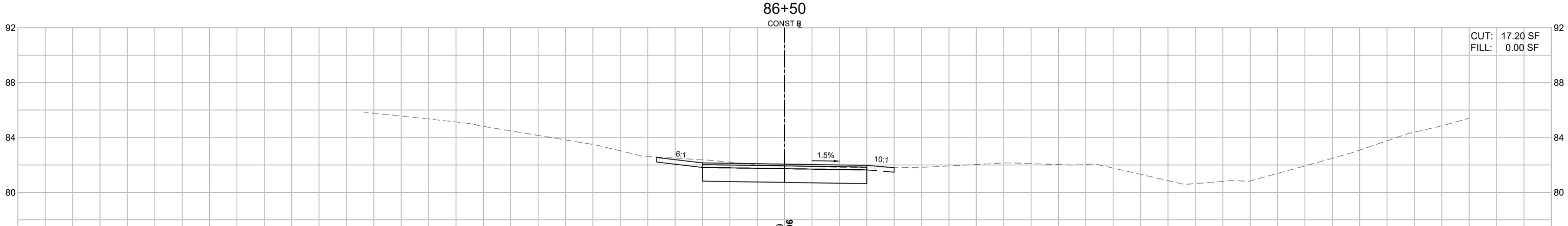

86+00

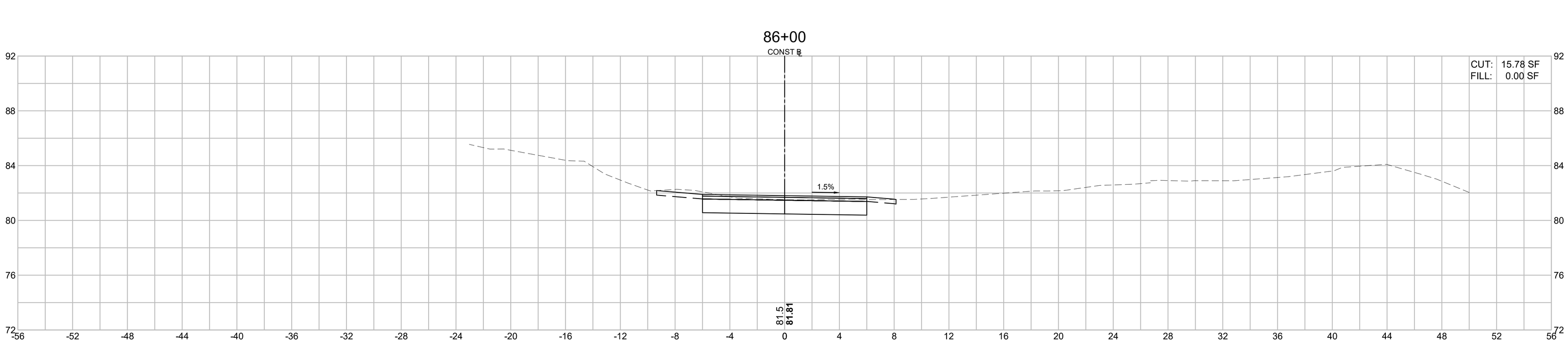

85+50

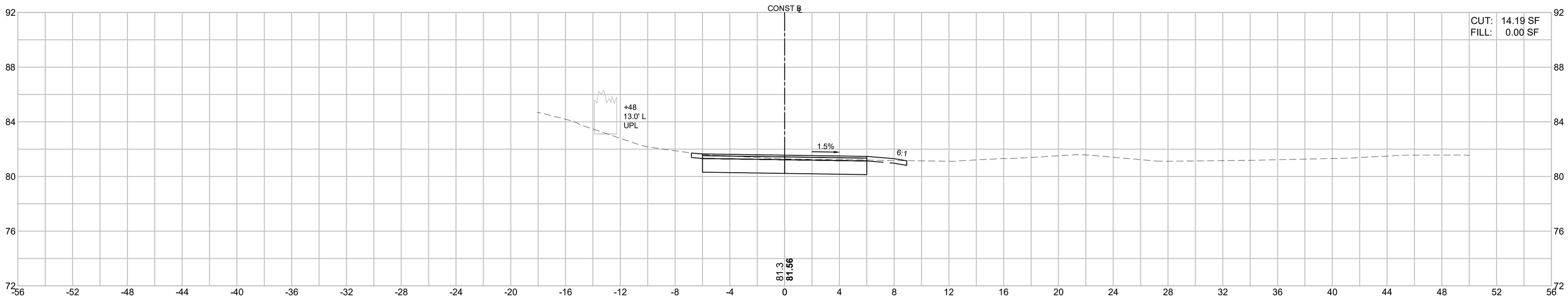

HOR. SCALE IN FEET
4 0 4 8
VER. SCALE IN FEET
4 0 4 8

FOR PERMITTING PURPOSES - NOT FOR CONSTRUCTION

A00869 - 232

Proposal No. 608930-128034

LAWRENCE
LMRC RAIL TRAIL

STATE	FED. AID PROJ. NO.	SHEET NO.	TOTAL SHEETS
MA	-	214	225
PROJECT FILE NO.	608903		

LMRC RAIL TRAIL
CROSS SECTIONS - 54 OF 65

608930_HD11\(CROSS SECTIONS).DWG Plotted on 28-Oct-2022 9:30 AM

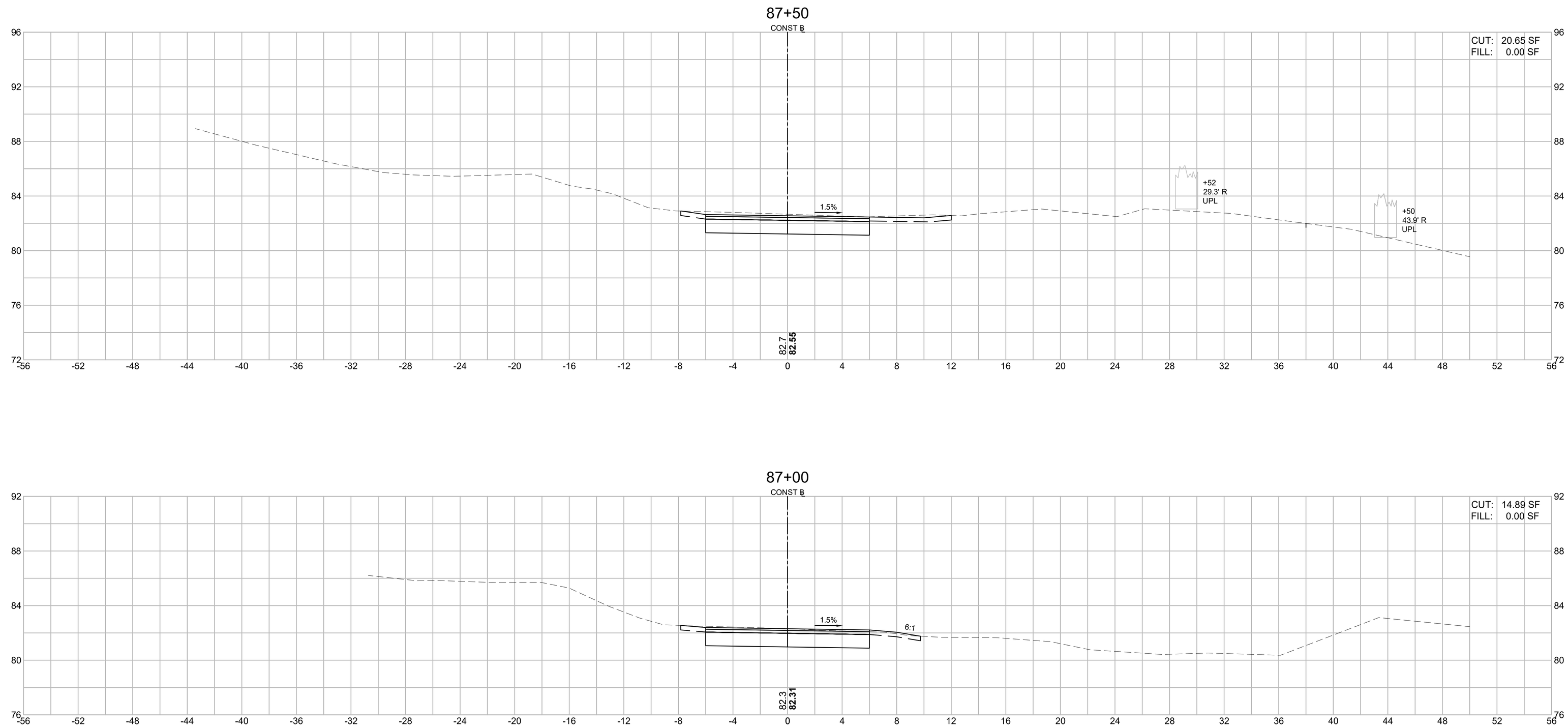

HOR. SCALE IN FEET
4 0 4 8
4 0 4 8
VER. SCALE IN FEET

FOR PERMITTING PURPOSES - NOT FOR CONSTRUCTION

A00869 - 233

Proposal No. 608930-128034

608930_HD11(CROSS SECTIONS).DWG Plotted on 28-Oct-2022 9:30 AM

LAWRENCE
LMRC RAIL TRAIL

STATE	FED. AID PROJ. NO.	SHEET NO.	TOTAL SHEETS
MA	-	215	225
	PROJECT FILE NO. 608903		

LMRC RAIL TRAIL
CROSS SECTIONS - 55 OF 65

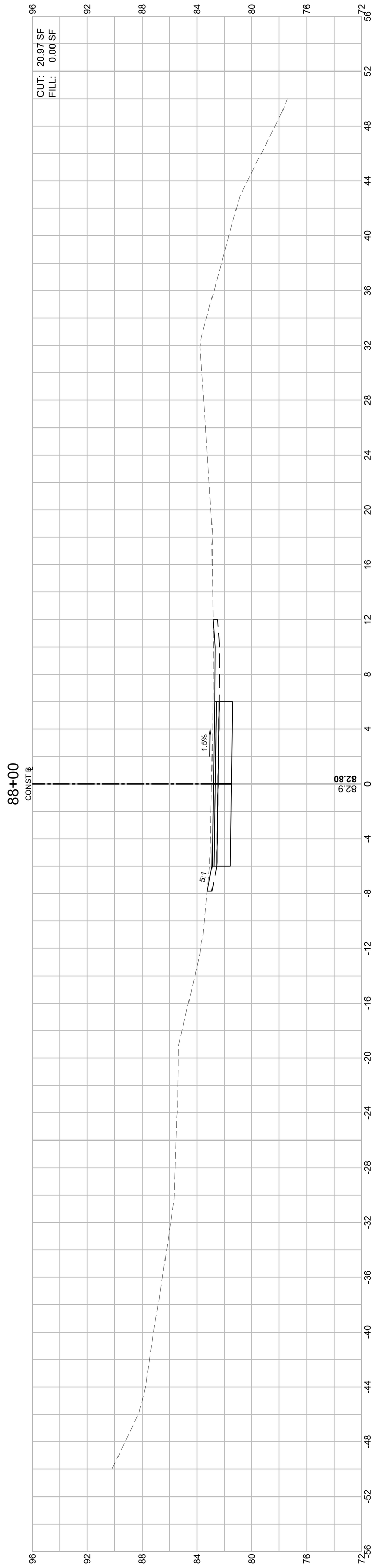

FOR PERMITTING PURPOSES - NOT FOR CONSTRUCTION

608930_HD11(CROSS SECTIONS) (CONNECTIONS).DWG Plotted on 28-Oct-2022 9:31 AM

LAWRENCE
LMRC RAIL TRAIL

STATE	FED. AID PROJ. NO.	SHEET NO.	TOTAL SHEETS
MA	-	216	225
PROJECT FILE NO. 608903			

SPICKET RIVER GREENWAY CONNECTION
CROSS SECTIONS - 56 OF 65

HOR. SCALE IN FEET 4 0 4 8
VER. SCALE IN FEET 4 0 4 8

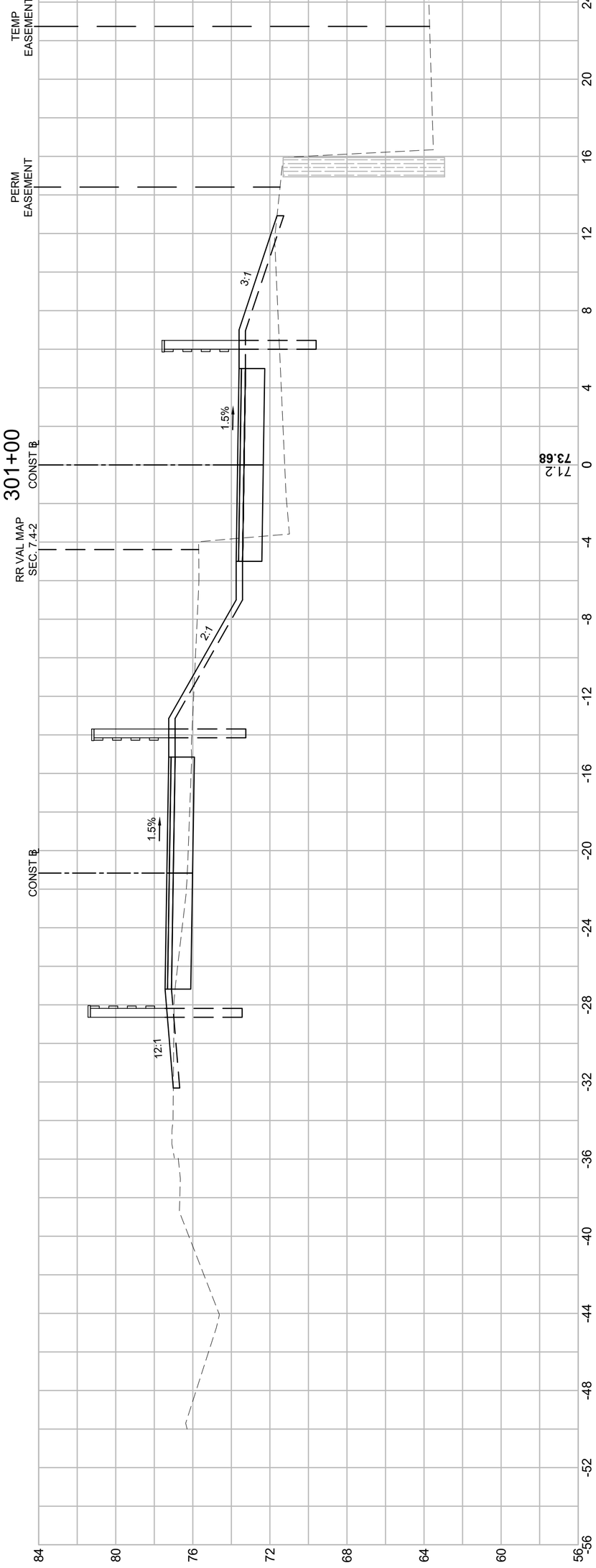

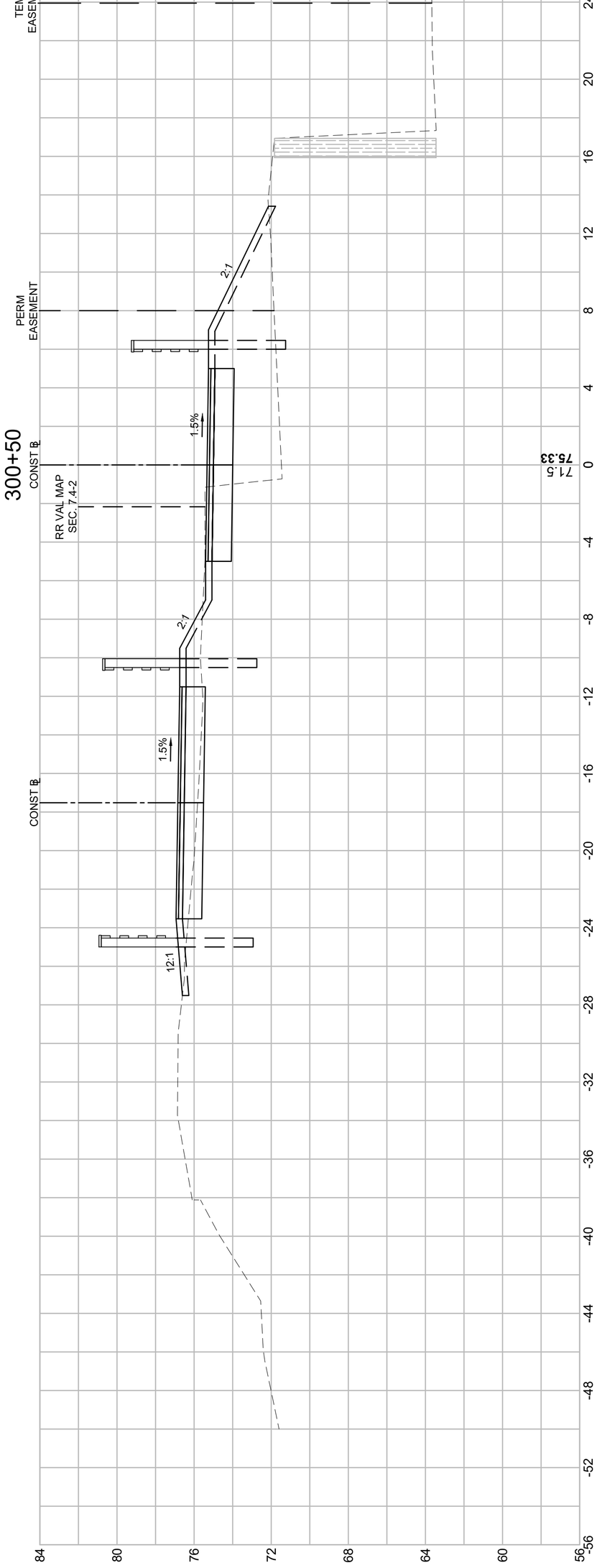

FOR PERMITTING PURPOSES - NOT FOR CONSTRUCTION

FOR PERMITTING PURPOSES - NOT FOR CONSTRUCTION

HOR. SCALE IN FEET
4 0 4 8
VER. SCALE IN FEET
4 0 4 8

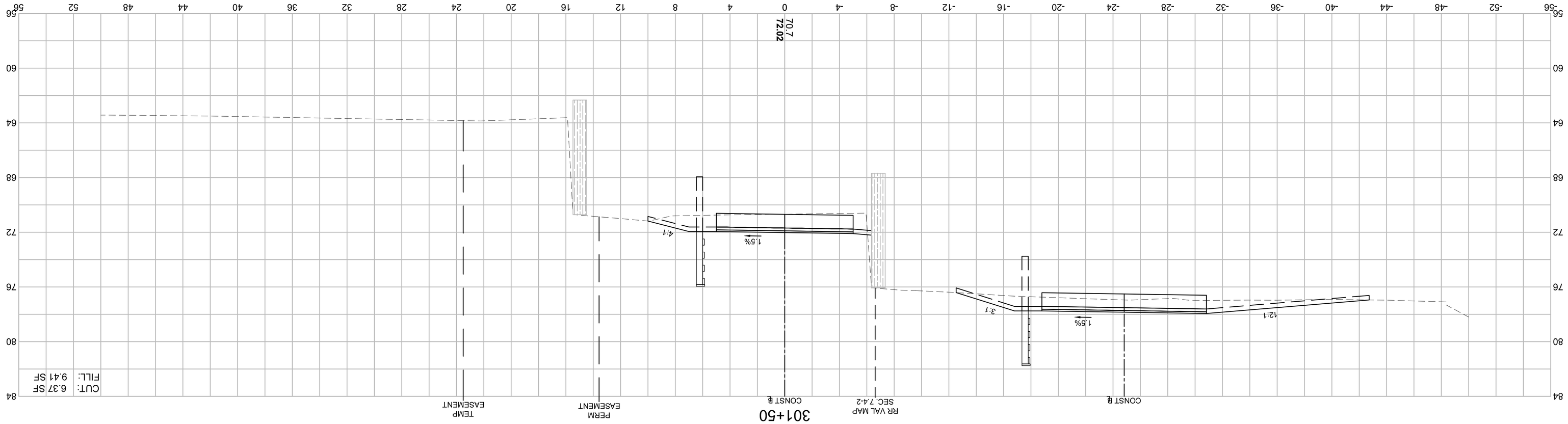

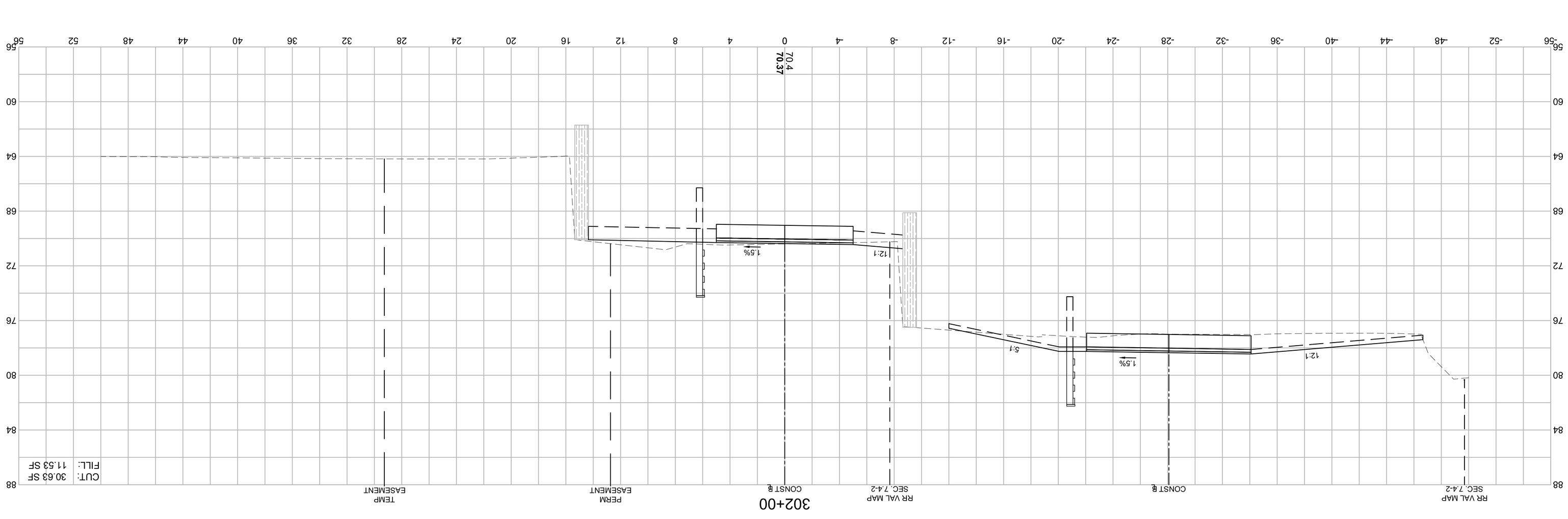

LAWRENCE
LMRC RAIL TRAIL

STATE	FED. AID PROJ. NO.	SHEET NO.	TOTAL SHEETS
MA	-	217	225
PROJECT FILE NO. 608903			

SPICKET RIVER GREENWAY CONNECTION
CROSS SECTIONS - 57 OF 65

Proposal No. 608930-128034

608930_HD11(CROSS SECTIONS) (CONNECTIONS).DWG Plotted on 28-Oct-2022 9:31 AM

A00869 - 236

LAWRENCE
LMRC RAIL TRAIL

STATE	FED. AID PROJ. NO.	SHEET NO.	TOTAL SHEETS
MA	-	218	225
PROJECT FILE NO.	608903		

SPICKET RIVER GREENWAY CONNECTION
CROSS SECTIONS - 58 OF 65

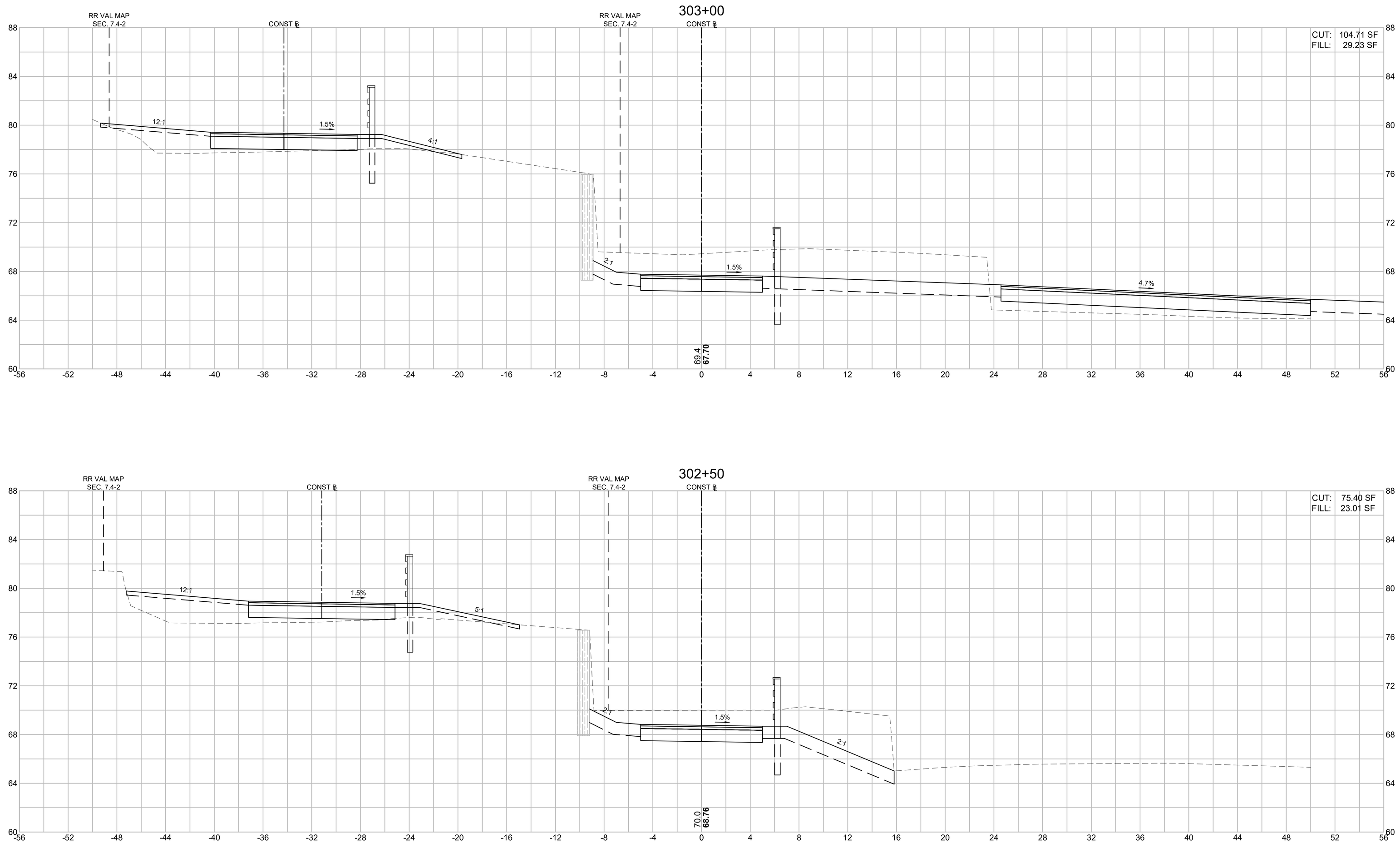

FOR PERMITTING PURPOSES - NOT FOR CONSTRUCTION

608930_HD11\(CROSS SECTIONS)\(CONNECTIONS).DWG Plotted on 28-Oct-2022 9:31 AM

Proposal No. 608930-128034

A00869 - 237

608930_HD11(CROSS SECTIONS) (CONNECTIONS).DWG Plotted on 28-Oct-2022 9:31 AM

LAWRENCE
LMRC RAIL TRAIL

STATE	FED. AID PROJ. NO.	SHEET NO.	TOTAL SHEETS
MA	-	219	225
	PROJECT FILE NO. 608903		

SPICKET RIVER GREENWAY CONNECTION
CROSS SECTIONS - 59 OF 65

HOR. SCALE IN FEET 8 4 0 4 8
VER. SCALE IN FEET 4 0 4

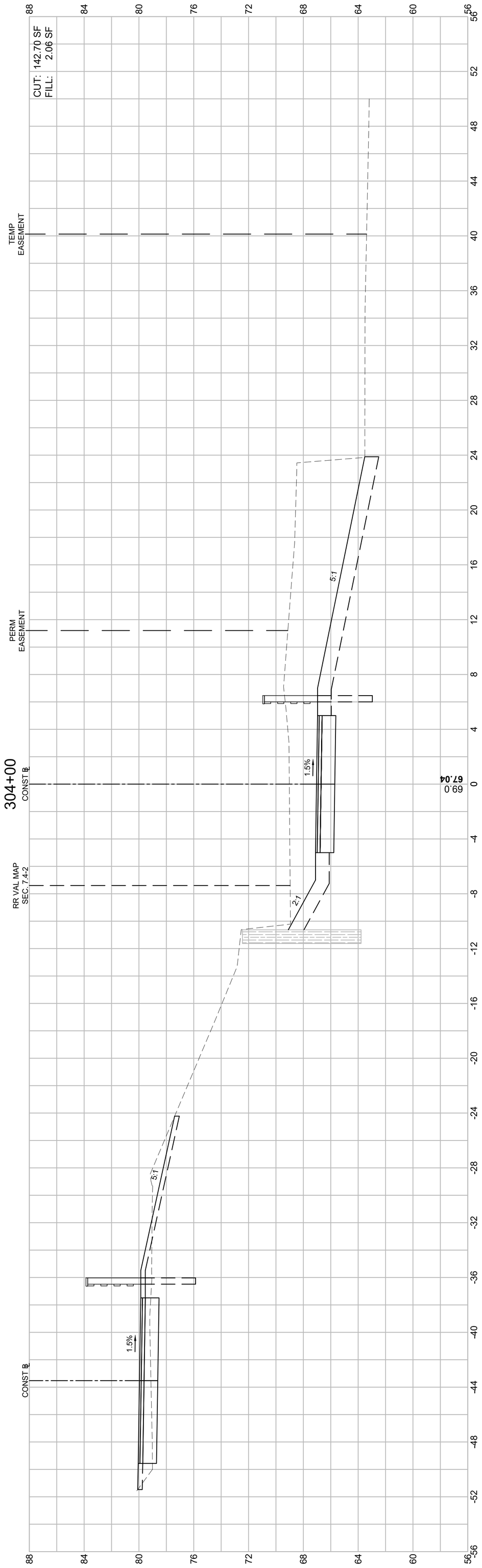

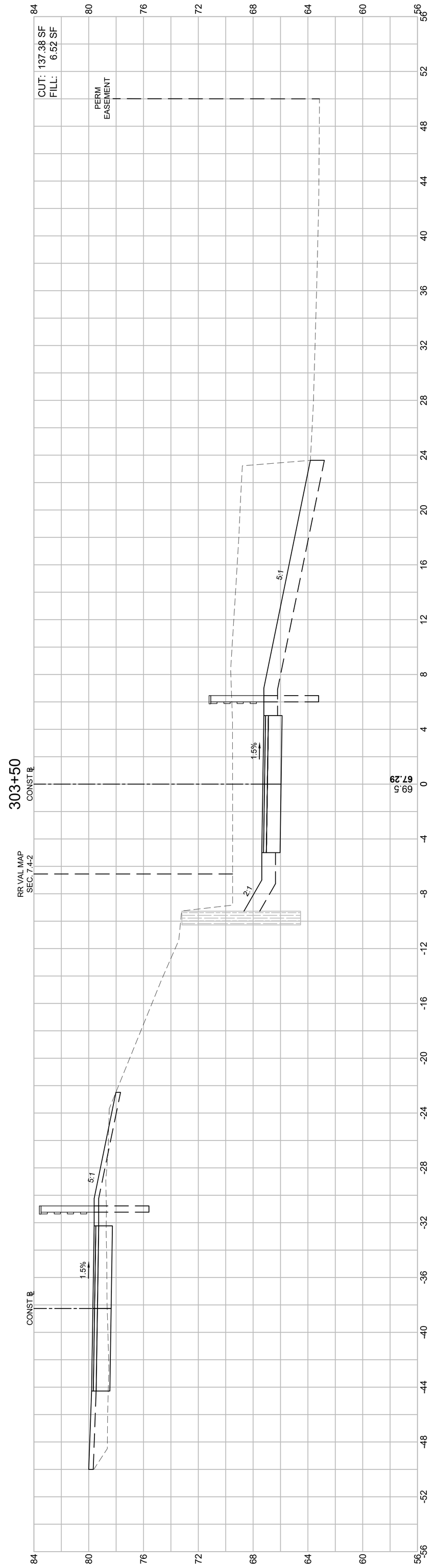

FOR PERMITTING PURPOSES - NOT FOR CONSTRUCTION

608930_HD11(CROSS SECTIONS) (CONNECTIONS).DWG Plotted on 28-Oct-2022 9:31 AM

LAWRENCE
LMRC RAIL TRAIL

STATE	FED. AID PROJ. NO.	SHEET NO.	TOTAL SHEETS
MA	-	220	225
PROJECT FILE NO. 608903			

SPICKET RIVER GREENWAY CONNECTION
CROSS SECTIONS - 60 OF 65

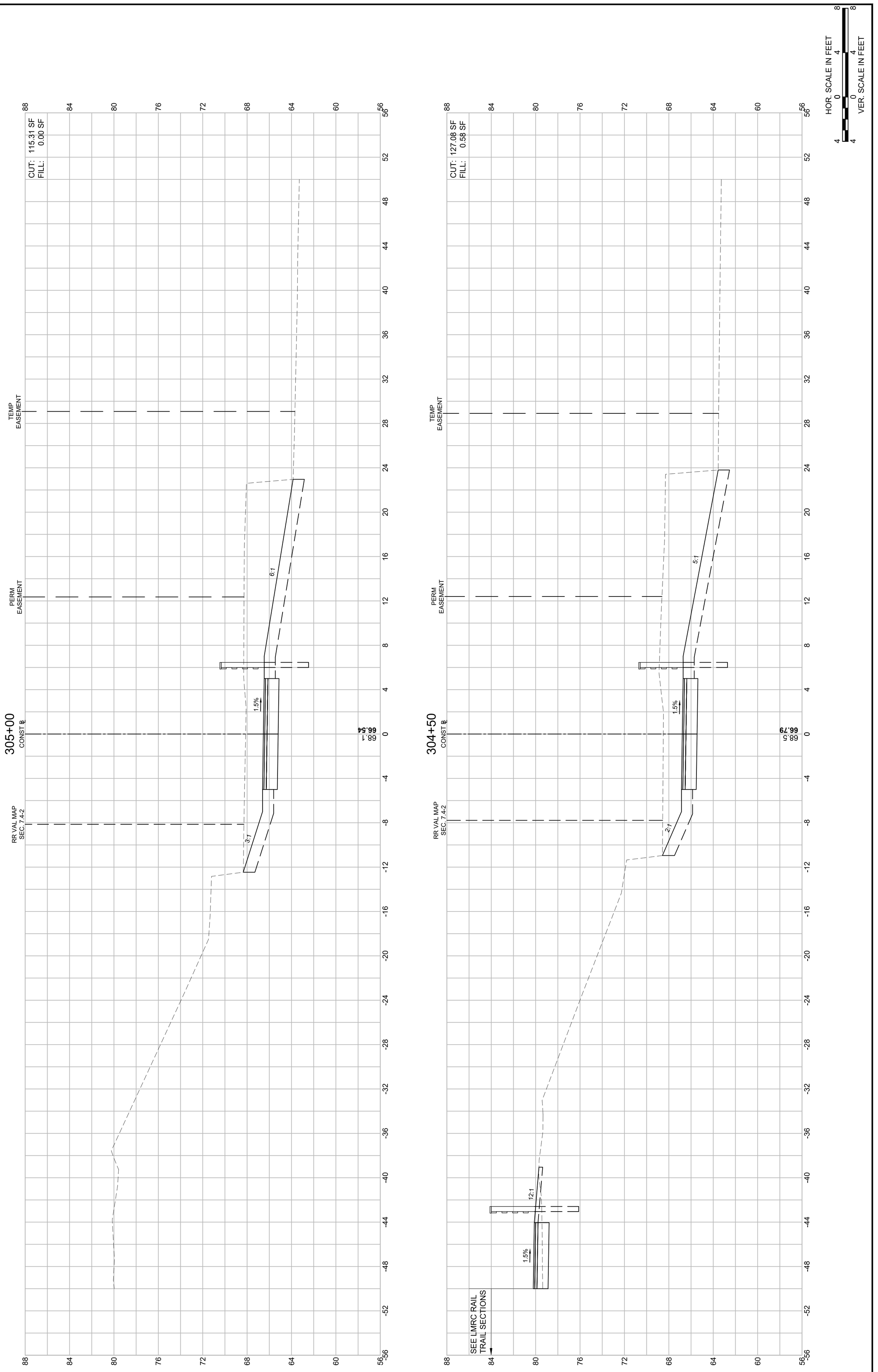

FOR PERMITTING PURPOSES - NOT FOR CONSTRUCTION

608930_HD11(CROSS SECTIONS) (CONNECTIONS).DWG Plotted on 28-Oct-2022 9:31 AM

LAWRENCE
LMRC RAIL TRAIL

STATE	FED. AID PROJ. NO.	SHEET NO.	TOTAL SHEETS
MA	-	221	225
	PROJECT FILE NO. 608903		

SPICKET RIVER GREENWAY CONNECTION
CROSS SECTIONS - 61 OF 65

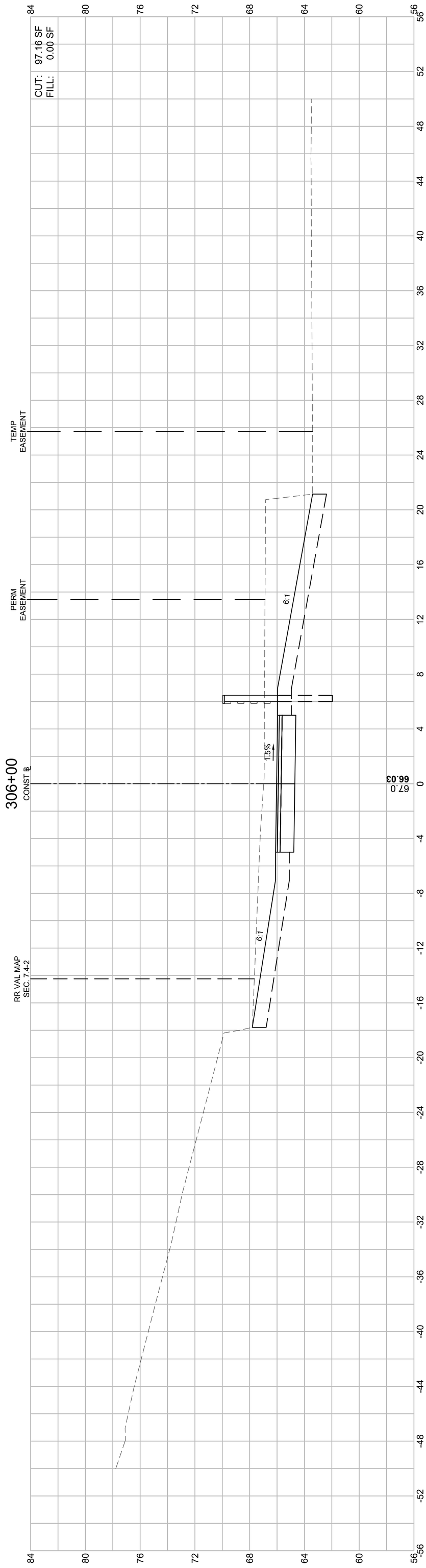

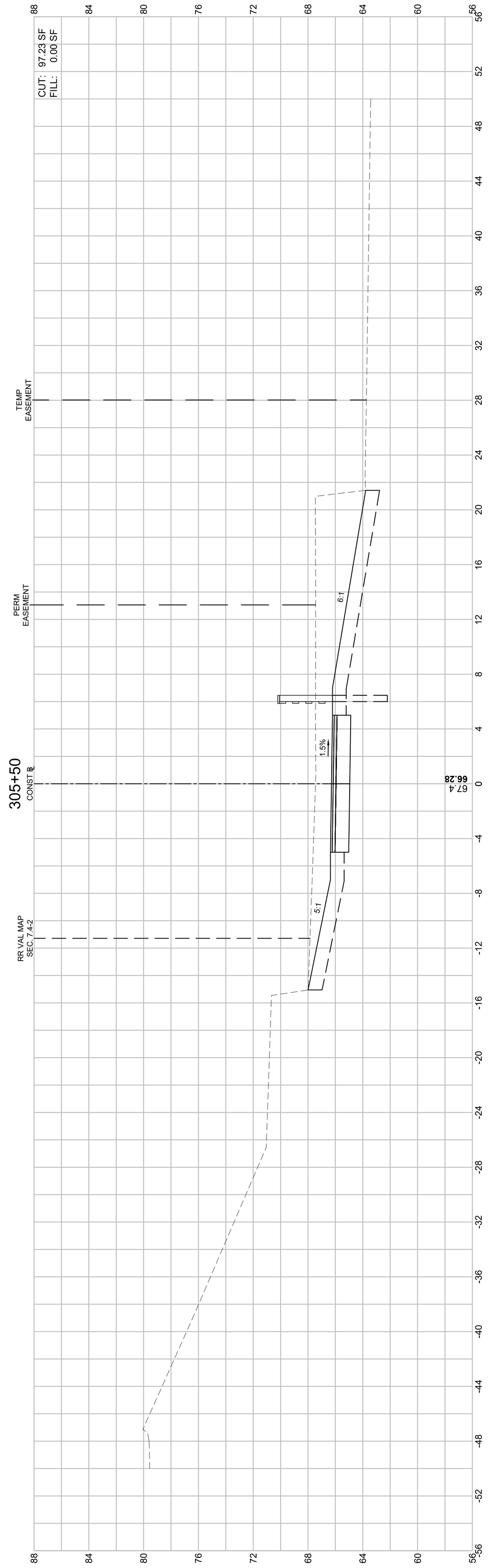

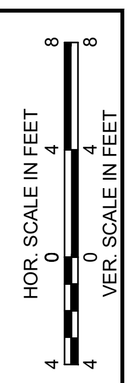

FOR PERMITTING PURPOSES - NOT FOR CONSTRUCTION

FOR PERMITTING PURPOSES - NOT FOR CONSTRUCTION

HOR. SCALE IN FEET
4 0 4 8
VER. SCALE IN FEET
4 0 4 8

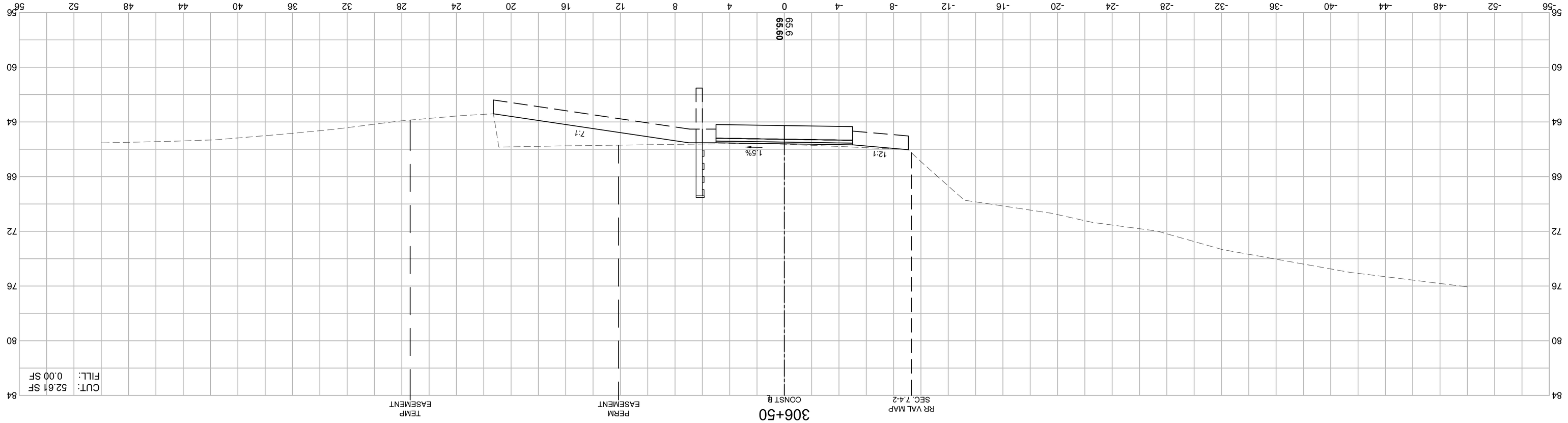

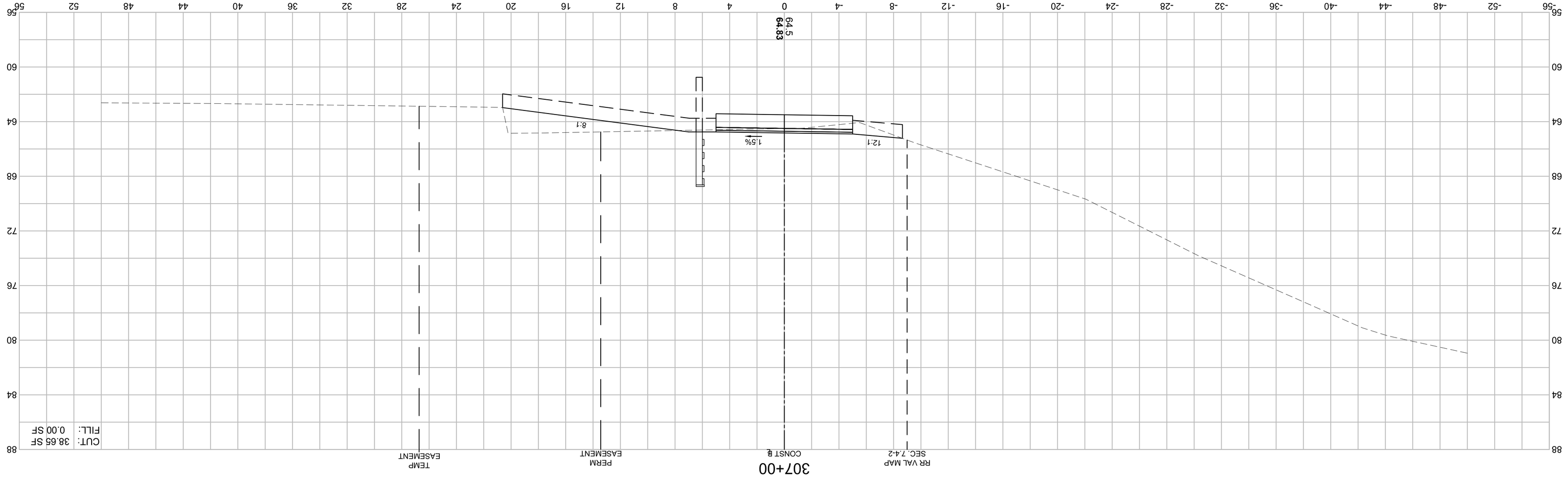

SPICKET RIVER GREENWAY CONNECTION
CROSS SECTIONS - 62 OF 65

PROJECT FILE NO. 608903			
STATE	FED. AID PROJ. NO.	SHEET NO.	TOTAL SHEETS
MA	-	222	225

LAWRENCE
LMRC RAIL TRAIL

Proposal No. 608930-128034

608930_HD11(CROSS SECTIONS)(CONNECTIONS).DWG Plotted on 28-Oct-2022 9:32 AM

A00869 - 241

LAWRENCE
LMRC RAIL TRAIL

STATE	FED. AID PROJ. NO.	SHEET NO.	TOTAL SHEETS
MA	-	223	225
PROJECT FILE NO.	608903		

SPICKET RIVER GREENWAY CONNECTION
CROSS SECTIONS - 63 OF 65

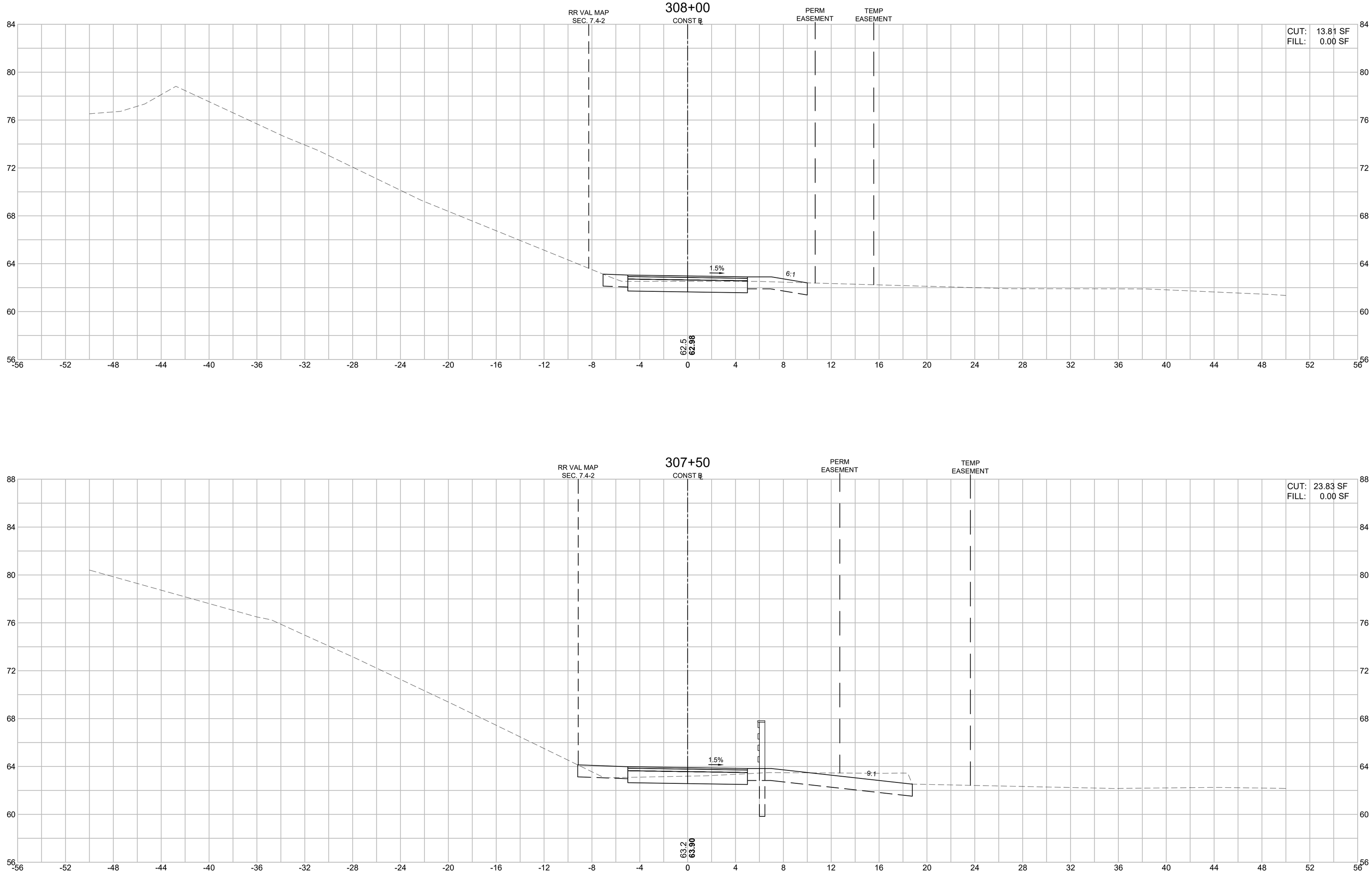

FOR PERMITTING PURPOSES - NOT FOR CONSTRUCTION

608930_HD11\(CROSS SECTIONS)\(CONNECTIONS).DWG Plotted on 28-Oct-2022 9:32 AM

Proposal No. 608930-128034

A00869 - 242

608930_HD11(CROSS SECTIONS) (CONNECTIONS).DWG Plotted on 28-Oct-2022 9:32 AM

LAWRENCE
LMRC RAIL TRAIL

STATE	FED. AID PROJ. NO.	SHEET NO.	TOTAL SHEETS
MA	-	224	225
	PROJECT FILE NO. 608903		

SPICKET RIVER GREENWAY CONNECTION
CROSS SECTIONS - 64 OF 65

HOR. SCALE IN FEET 4 0 4 8
VER. SCALE IN FEET 4 0 4 8

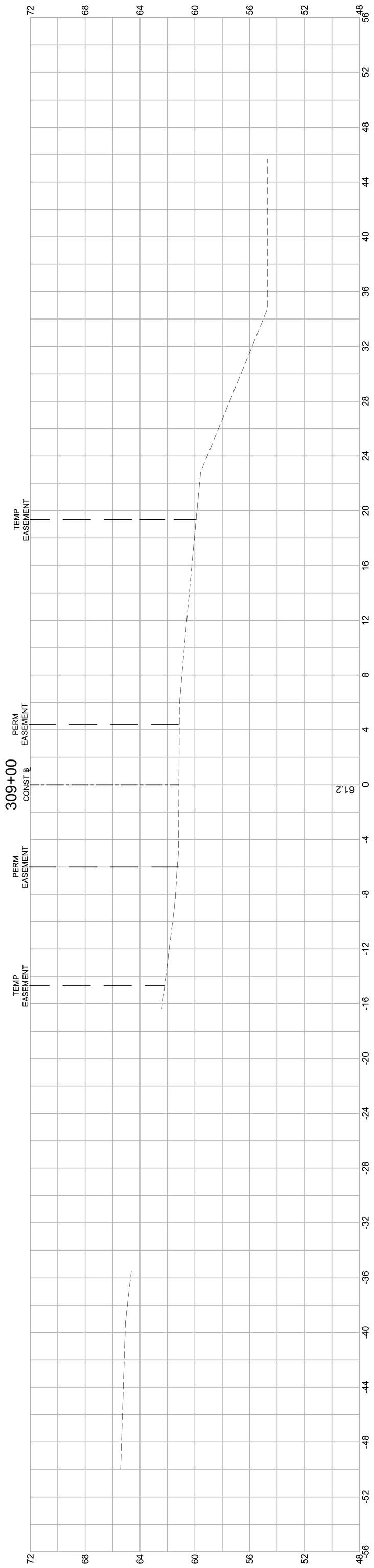

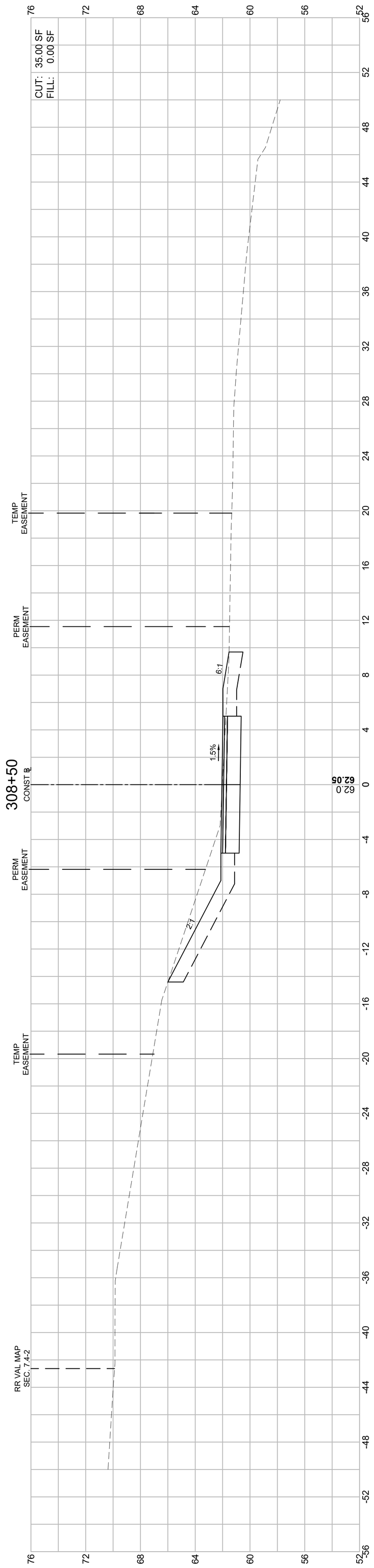

FOR PERMITTING PURPOSES - NOT FOR CONSTRUCTION

LAWRENCE
LMRC RAIL TRAIL

STATE	FED. AID PROJ. NO.	SHEET NO.	TOTAL SHEETS
MA	-	225	225
PROJECT FILE NO.	608903		

MANCHESTER STREET PARK CONNECTION
CROSS SECTIONS - 65 OF 65

608930_HD11\CROSS SECTIONS\CONNECTIONS.DWG Plotted on 28-Oct-2022 9:32 AM

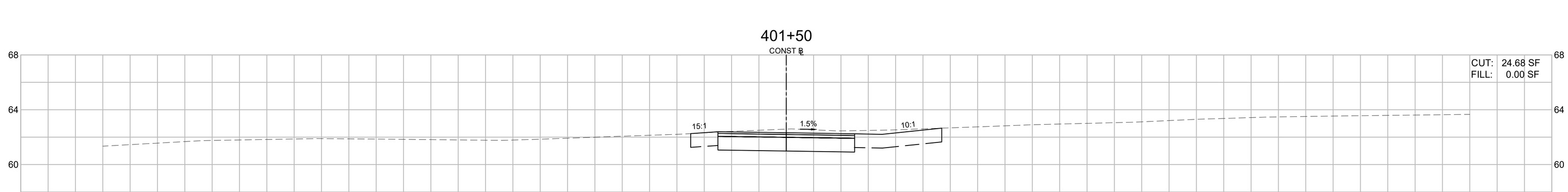

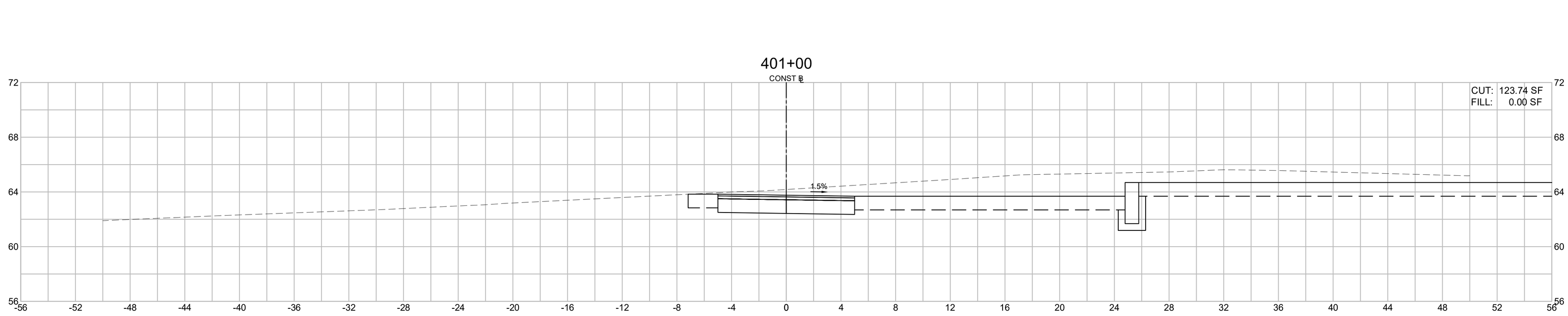

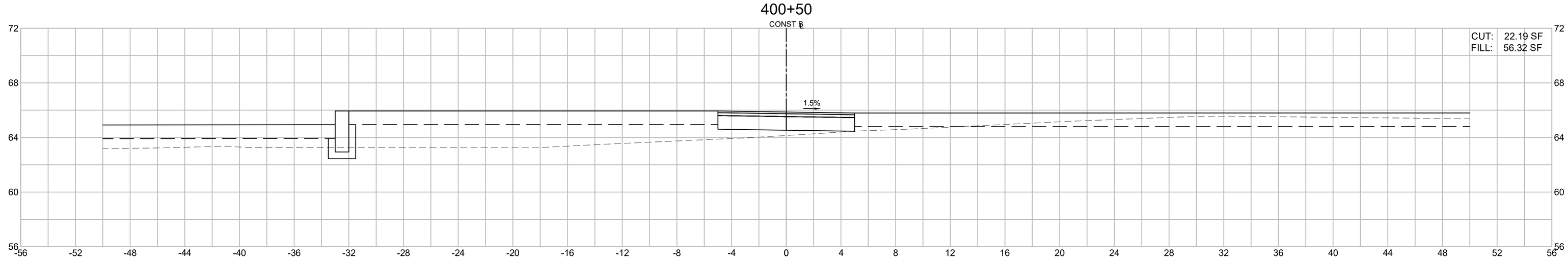

HOR. SCALE IN FEET
4 0 4 8
4 0 4 8
VER. SCALE IN FEET

FOR PERMITTING PURPOSES - NOT FOR CONSTRUCTION

Attachment B: MESA Response Letter

MASSWILDLIFE

DIVISION OF
FISHERIES & WILDLIFE

1 Rabbit Hill Road, Westborough, MA 01581
p: (508) 389-6300 | f: (508) 389-7890
MASS.GOV/MASSWILDLIFE

January 05, 2023

Gregory Russo
TRC Environmental
650 Suffolk Street
Lowell MA 01854

RE: Project Location: Railroad ROW between Merrimack River and Immaculate Conception Cemetery
Town: LAWRENCE
NHESP Tracking No.: 23-41576

To Whom It May Concern:

Thank you for contacting the Natural Heritage and Endangered Species Program of the MA Division of Fisheries & Wildlife (the "Division") for information regarding state-listed rare species in the vicinity of the above referenced site. Based on the information provided, this project site, or a portion thereof, is located **within** *Priority Habitat 2154* (PH 2154) and *Estimated Habitat 1362* (EH 1362) as indicated in the *Massachusetts Natural Heritage Atlas* (15th Edition) for the following state-listed rare species:

Scientific name	Common Name	Taxonomic Group	State Status
Acipenser brevirostrum	Shortnose Sturgeon	Fish	Endangered
Acipenser oxyrinchus	Atlantic Sturgeon	Fish	Endangered

The species listed above are protected under the Massachusetts Endangered Species Act (MESA) (M.G.L. c. 131A) and its implementing regulations (321 CMR 10.00). State-listed wildlife are also protected under the state's Wetlands Protection Act (WPA) (M.G.L. c. 131, s. 40) and its implementing regulations (310 CMR 10.00). Fact sheets for most state-listed rare species can be found on our website (www.mass.gov/nhesp).

Please note that projects and activities located within Priority and/or Estimated Habitat **must** be reviewed by the Division for compliance with the state-listed rare species protection provisions of MESA (321 CMR 10.00) and/or the WPA (310 CMR 10.00).

Wetlands Protection Act (WPA)
If the project site is within Estimated Habitat and a Notice of Intent (NOI) is required, then a copy of the NOI must be submitted to the Division so that it is received at the same time as the local conservation commission. If the Division determines that the proposed project will adversely affect the actual Resource Area habitat of state-protected wildlife, then the proposed project may not be permitted (310 CMR 10.37, 10.58(4)(b) & 10.59). In such a case, the project proponent may request a consultation with the Division to discuss potential project design modifications that would avoid adverse effects to rare wildlife habitat.

A streamlined joint MESA/WPA review process is available. When filing a Notice of Intent (NOI), the applicant may file concurrently under the MESA on the same NOI form and qualify for a 30-day streamlined joint review. For a copy of the NOI form, please visit the MA Department of Environmental Protection's website: https://www.mass.gov/how-to/wpa-form-3-wetlands-notice-of-intent.

MA Endangered Species Act (MESA)

If the proposed project is located within Priority Habitat and is not exempt from review (see 321 CMR 10.14), then project plans, a fee, and other required materials must be sent to Natural Heritage Regulatory Review to determine whether a probable Take under the MA Endangered Species Act would occur (321 CMR 10.18). Please note that all proposed and anticipated development must be disclosed, as MESA does not allow project segmentation (321 CMR 10.16). For a MESA filing checklist and additional information please see our website: https://www.mass.gov/regulatory-review.

We recommend that rare species habitat concerns be addressed during the project design phase prior to submission of a formal MESA filing, as avoidance and minimization of impacts to rare species and their habitats is likely to expedite endangered species regulatory review.

This evaluation is based on the most recent information available in the Natural Heritage database, which is constantly being expanded and updated through ongoing research and inventory. If the purpose of your inquiry is to generate a species list to fulfill the federal Endangered Species Act (16 U.S.C. 1531 et seq.) information requirements for a permit, proposal, or authorization of any kind from a federal agency, we recommend that you contact the National Marine Fisheries Service at (978)281-9328 and use the U.S. Fish and Wildlife Service's Information for Planning and Conservation website (https://ecos.fws.gov/ipac). If you have any questions regarding this letter please contact Melany Cheeseman, Endangered Species Review Assistant, at (508) 389-6357.

Sincerely,

Everose Schlüter

Everose Schlüter, Ph.D.
Assistant Director

MASSWILDLIFE

DIVISION OF
FISHERIES & WILDLIFE

1 Rabbit Hill Road, Westborough, MA 01581
p: (508) 389-6300 | f: (508) 389-7890
MASS.GOV/MASSWILDLIFE

September 27, 2023

Daniel McCarthy
City of Lawrence
200 Common Street
Lawrence, Massachusetts 01840

Lawrence Conservation Commission
147 Haverhill St
Lawrence, MA 018401515

RE: Applicant: Daniel McCarthy, City of Lawrence
Project Location: Railroad ROW between Merrimack River and Immaculate Conception Cemetery
Project Description: Lawrence Manchester Rail Corridor (LMRC) Rail Trail
DEP Wetlands File No.: 195-0217
NHESP File No.: 23-8609
Heritage Hub Form ID: RC-65315

Dear Commissioners & Applicant:

The Natural Heritage & Endangered Species Program of the Massachusetts Division of Fisheries & Wildlife (the "Division") received a Notice of Intent with site plans (dated 8/16/23, revised date N/A) in compliance with the rare wildlife species section of the Massachusetts Wetlands Protection Act Regulations (310 CMR 10.58(4)(b), 10.59). The Division also received the MESA Review Checklist and supporting documentation for review pursuant to the MA Endangered Species Act Regulations (321 CMR 10.18).

WETLANDS PROTECTION ACT (WPA)

Based on a review of the information that was provided and the information that is currently contained in our database, the Division has determined that this project, as currently proposed, **will not adversely affect** the actual Resource Area Habitat of state-protected rare wildlife species. Therefore, it is our opinion that this project meets the state-listed species performance standard for the issuance of an Order of Conditions.

Please note that this determination addresses only the matter of rare wildlife habitat and does not pertain to other wildlife habitat issues that may be pertinent to the proposed project.

MASSACHUSETTS ENDANGERED SPECIES ACT (MESA)

Based on a review of the information that was provided and the information that is currently contained in our database, the Division has determined that this project, as currently proposed, **will not result in a prohibited Take** of state-listed rare species. This determination is a final decision of the Division of Fisheries and Wildlife pursuant to 321 CMR 10.18. Any changes to the proposed project or any additional work beyond that shown on the site plans may require an additional filing with the Division pursuant to the MESA. This project may be subject to

further review if no physical work is commenced within five years from the date of issuance of this determination, or if there is a change to the project.

Please note that this determination addresses only the matter of state-listed species and their habitats. If you have any questions regarding this letter please contact Melany Cheeseman, Endangered Species Review Assistant, at Melany.Cheeseman@mass.gov, (508) 389-6357.

Sincerely,

Everose Schlüter, Ph.D.
Assistant Director

cc:

THIS PAGE IS INTENTIONALLY LEFT BLANK

DOCUMENT A00870

MASSACHUSETTS
DIVISION OF FISHERIES AND WILDLIFE

NATURAL HERITAGE AND ENDANGERED SPECIES PROGRAM

NHESP No Take Letter

THIS PAGE IS INTENTIONALLY LEFT BLANK

MASSWILDLIFE

DIVISION OF
FISHERIES & WILDLIFE

1 Rabbit Hill Road, Westborough, MA 01581
p: (508) 389-6300 | f: (508) 389-7890
MASS.GOV/MASSWILDLIFE

September 27, 2023

Daniel McCarthy
City of Lawrence
200 Common Street
Lawrence, Massachusetts 01840

Lawrence Conservation Commission
147 Haverhill St
Lawrence, MA 018401515

RE: Applicant: Daniel McCarthy, City of Lawrence
Project Location: Railroad ROW between Merrimack River and Immaculate Conception Cemetery
Project Description: Lawrence Manchester Rail Corridor (LMRC) Rail Trail
DEP Wetlands File No.: 195-0217
NHESP File No.: 23-8609
Heritage Hub Form ID: RC-65315

Dear Commissioners & Applicant:

The Natural Heritage & Endangered Species Program of the Massachusetts Division of Fisheries & Wildlife (the "Division") received a Notice of Intent with site plans (dated 8/16/23, revised date N/A) in compliance with the rare wildlife species section of the Massachusetts Wetlands Protection Act Regulations (310 CMR 10.58(4)(b), 10.59). The Division also received the MESA Review Checklist and supporting documentation for review pursuant to the MA Endangered Species Act Regulations (321 CMR 10.18).

WETLANDS PROTECTION ACT (WPA)

Based on a review of the information that was provided and the information that is currently contained in our database, the Division has determined that this project, as currently proposed, **will not adversely affect** the actual Resource Area Habitat of state-protected rare wildlife species. Therefore, it is our opinion that this project meets the state-listed species performance standard for the issuance of an Order of Conditions.

Please note that this determination addresses only the matter of rare wildlife habitat and does not pertain to other wildlife habitat issues that may be pertinent to the proposed project.

MASSACHUSETTS ENDANGERED SPECIES ACT (MESA)

Based on a review of the information that was provided and the information that is currently contained in our database, the Division has determined that this project, as currently proposed, **will not result in a prohibited Take** of state-listed rare species. This determination is a final decision of the Division of Fisheries and Wildlife pursuant to 321 CMR 10.18. Any changes to the proposed project or any additional work beyond that shown on the site plans may require an additional filing with the Division pursuant to the MESA. This project may be subject to

further review if no physical work is commenced within five years from the date of issuance of this determination, or if there is a change to the project.

Please note that this determination addresses only the matter of state-listed species and their habitats. If you have any questions regarding this letter please contact Melany Cheeseman, Endangered Species Review Assistant, at Melany.Cheeseman@mass.gov, (508) 389-6357.

Sincerely,

Everose Schlüter, Ph.D.
Assistant Director

cc:

DOCUMENT A00871

NMFS No Adverse Effect Determination

THIS PAGE IS INTENTIONALLY LEFT BLANK

From: Kaitlyn Shaw - NOAA Federal
To: Powers, Sarah K. (DOT)
Cc: Burns, Trevor B. (DOT)
Subject: Re:
Date: Monday, December 11, 2023 1:01:56 PM
Attachments: Mindful-Badge_WEB.png

CAUTION: This email originated from a sender outside of the Commonwealth of Massachusetts mail system. Do not click on links or open attachments unless you recognize the sender and know the content is safe.

Hi Sarah,
Thanks for your email. I agree that the project is unlikely to result in adverse effects to Essential Fish Habitat and therefore this email correspondence can serve as your completion of the consultation. You are able to make that determination, based on your best professional judgment, but a quick email makes sense in some cases to confirm. Here is the language from the FHWA/ NMFS process guide related to your ability to make the determination of no adverse effect on EFH: "If FHWA determines that there is no adverse effect on EFH or NOAA trust resources, EFH consultation is not required."

Hope you have a nice holiday season!
Best,
Kaitlyn Shaw (she/ her)
Marine Habitat Resource Specialist
Habitat and Ecosystem Services Division
NOAA/ National Marine Fisheries Service

Mindful NOAA Program Manager

On Fri, Dec 8, 2023 at 4:04 PM Powers, Sarah K. (DOT) <Sarah.K.Powers@dot.state.ma.us> wrote:

> Hi Kaitlyn,
>
> I am currently working on project in Lawrence, MA where MassDOT is proposing to install a shared use rail trail along the abandoned Lawrence-Manchester Rail Corridor. The rail trail will run from the South Canal to the Lawrence/Methuen city line where it will connect with the Methuen Rail Trail. As part of this project, it is proposed to repurpose existing abandoned railway bridges over the South Canal, Merrimack River, and North Canal. This will involve removal of the existing railway ties and deck replacement to install a surface suitable for the shared use path and installation of other features associated with the path, such as railings. There are no LUW impacts associated with this work, as all work will take place on the existing bridge structure. The consultant has confirmed that containment will be

installed to prevent anything from falling into the river and will not require any work in water to stage the containment. Attached is a Locus Map for the project area.

A Self Verification form is being submitted to the Army Corps for Section 404 of the Clean Water Act, due to permanent impacts to an isolated vegetated wetland further up the corridor. The IVW has no drainage or hydraulic connection to the Merrimack River, Spicket River, or the canals.

Since there is no impact to LUW in the Merrimack River and canals associated with this work, I was hoping you could advise me on the correct path for clearance and if an EFH worksheet or assessment would be needed for the project.

Thank you in advance, we are trying to move this project along quickly and work on this consultation inhouse.

Best,

Sarah

Sarah Powers

Environmental Analyst I

MEPA/NEPA

Environmental Services, Highway Division

Massachusetts Department of Transportation

10 Park Plaza

Boston, MA 02116

DOCUMENT A00872

UNITED STATES DEPARTMENT OF THE INTERIOR
FISH AND WILDLIFE SERVICE
(USFWS NLAA)
CONCURRENCE VERIFICATION LETTER

THIS PAGE IS INTENTIONALLY LEFT BLANK

United States Department of the Interior

FISH AND WILDLIFE SERVICE
New England Ecological Services Field Office
70 Commercial Street, Suite 300
Concord, NH 03301-5094
Phone: (603) 223-2541 Fax: (603) 223-0104

In Reply Refer To: February 02, 2023
Project code: 2023-0021182
Project Name: 608930 - LAWRENCE- LAWRENCE MANCHESTER RAIL CORRIDOR (LMRC) RAIL TRAIL

Subject: Concurrence verification letter for the '608930 - LAWRENCE- LAWRENCE MANCHESTER RAIL CORRIDOR (LMRC) RAIL TRAIL' project under the revised February 5, 2018, FHWA, FRA, FTA Programmatic Biological Opinion for Transportation Projects within the Range of the Indiana Bat and Northern Long-eared Bat.

To whom it may concern:

The U.S. Fish and Wildlife Service (Service) has received your request dated February 02, 2023 to verify that the **608930 - LAWRENCE- LAWRENCE MANCHESTER RAIL CORRIDOR (LMRC) RAIL TRAIL** (Proposed Action) may rely on the concurrence provided in the February 5, 2018, FHWA, FRA, FTA Programmatic Biological Opinion for Transportation Projects within the Range of the Indiana Bat and Northern Long-eared Bat (PBO) to satisfy requirements under Section 7(a)(2) of the Endangered Species Act of 1973 (ESA) (87 Stat. 884, as amended; 16 U.S.C 1531 *et seq.*).

Based on the information you provided (Project Description shown below), you have determined that the Proposed Action is within the scope and adheres to the criteria of the PBO, including the adoption of applicable avoidance and minimization measures, and may affect, but is not likely to adversely affect (NLAA) the endangered Indiana bat (*Myotis sodalis*) and/or the threatened Northern long-eared bat (*Myotis septentrionalis*). Consultation with the Service pursuant to Section 7(a)(2) of the Endangered Species Act of 1973 (ESA) (87 Stat. 884, as amended; 16 U.S.C. 1531 et seq.) is required.

The Service has 14 calendar days to notify the lead Federal action agency or designated non-federal representative if we determine that the Proposed Action does not meet the criteria for a NLAA determination under the PBO. If we do not notify the lead Federal action agency or designated non-federal representative within that timeframe, you may proceed with the Proposed Action under the terms of the NLAA concurrence provided in the PBO. This verification period allows Service Field Offices to apply local knowledge to implementation of the PBO, as we may

identify a small subset of actions having impacts that were unanticipated. In such instances, Service Field Offices may request additional information that is necessary to verify inclusion of the proposed action under the PBO.

NOTE: The Service reclassified the NLEB as an endangered species on November 30, 2022. This ruling becomes effective on January 30, 2023. This NLAA determination does not require reinitiation. For projects requiring consultation after the effective date of January 30, 2023, please use the 2022 FHWA, FRA, FTA PBO.

For Proposed Actions that include bridge/culvert or structure removal, replacement, and/or maintenance activities: If your initial bridge/culvert or structure assessment documented signs of bat use or occupancy, or an assessment failed to detect Indiana bats and/or NLEBs, yet are later detected prior to, or during construction, please submit the Post Assessment Discovery of Bats at Bridge/Culvert or Structure Form (User Guide Appendix E) to this Service Office within 2 working days of any potential take. In these instances, potential incidental take of Indiana bats and/or NLEBs is covered under the Incidental Take Statement in the 2018 FHWA, FRA, FTA PBO (provided that the take is reported to the Service).

If the Proposed Action is modified, or new information reveals that it may affect the Indiana bat and/or Northern long-eared bat in a manner or to an extent not considered in the PBO, further review to conclude the requirements of ESA Section 7(a)(2) may be required. If the Proposed Action may affect any other federally-listed or proposed species, and/or any designated critical habitat, additional consultation between the lead Federal action agency and this Service Office is required. If the proposed action has the potential to take bald or golden eagles, additional coordination with the Service under the Bald and Golden Eagle Protection Act may also be required. In either of these circumstances, please contact this Service Office.

The following species may occur in your project area and **are not** covered by this determination:

- Monarch Butterfly *Danaus plexippus* Candidate

Project Description

The following project name and description was collected in IPaC as part of the endangered species review process.

Name

608930 - LAWRENCE- LAWRENCE MANCHESTER RAIL CORRIDOR (LMRC) RAIL TRAIL

Description

608930 - LAWRENCE- LAWRENCE MANCHESTER RAIL CORRIDOR (LMRC) RAIL TRAIL

The proposed improvements include redeveloping the inactive Lawrence Manchester Rail Corridor into a shared-use path / alternate transportation corridor (ATC) for pedestrian and bicycle accommodations. The 1.40 mile project begins at Merrimack Street in Lawrence and extends to the Methuen/Lawrence City Line. The ATC will connect Merrimack Street to the south and Manchester Street Park, the Spicket River Greenway, and the future Methuen Rail Trail to the north. The project also includes improving 3 intersections for at-grade crossings, and developing additional access points to the Rail Trail from existing developments and parks. There are four bridges along the Right-of-Way that will be improved as part of the project including deck replacements at bridges over the South Canal and the Merrimack River, complete replacement of the Lowell Street Bridge that spans the Right of Way, and a superstructure replacement at the Manchester Street Bridge Crossing.

Monarch Butterfly: Candidate Species only, no conservation measures at this time

Determination Key Result

Based on your answers provided, this project(s) may affect, but is not likely to adversely affect the endangered Indiana bat and/or the threatened Northern long-eared bat, therefore, consultation with the U.S. Fish and Wildlife Service pursuant to Section 7(a)(2) of the Endangered Species Act of 1973 (ESA) (87 Stat. 884, as amended 16 U.S.C. 1531 *et seq.*) is required. However, also based on your answers provided, this project may rely on the concurrence provided in the revised February 5, 2018, FHWA, FRA, FTA Programmatic Biological Opinion for Transportation Projects within the Range of the Indiana Bat and Northern Long-eared Bat.

Qualification Interview

1. Is the project within the range of the Indiana bat[1]?

   [1] See Indiana bat species profile

   Automatically answered
   No

2. Is the project within the range of the Northern long-eared bat[1]?

   [1] See Northern long-eared bat species profile

   Automatically answered
   Yes

3. Which Federal Agency is the lead for the action?

   A) Federal Highway Administration (FHWA)

4. Are *all* project activities limited to non-construction[1] activities only? (examples of non-construction activities include: bridge/abandoned structure assessments, surveys, planning and technical studies, property inspections, and property sales)

   [1] Construction refers to activities involving ground disturbance, percussive noise, and/or lighting.

   No

5. Does the project include *any* activities that are **greater than** 300 feet from existing road/rail surfaces[1]?

   [1] Road surface is defined as the actively used [e.g. motorized vehicles] driving surface and shoulders [may be pavement, gravel, etc.] and rail surface is defined as the edge of the actively used rail ballast.

   No

6. Does the project include *any* activities **within** 0.5 miles of a known Indiana bat and/or NLEB hibernaculum[1]?

   [1] For the purpose of this consultation, a hibernaculum is a site, most often a cave or mine, where bats hibernate during the winter (see suitable habitat), but could also include bridges and structures if bats are found to be hibernating there during the winter.

   No

7. Is the project located **within** a karst area?

   No

8. Is there *any* suitable[1] summer habitat for Indiana Bat or NLEB **within** the project action area[2]? (includes any trees suitable for maternity, roosting, foraging, or travelling habitat)

   [1] See the Service's summer survey guidance for our current definitions of suitable habitat.

   [2] The action area is defined as all areas to be affected directly or indirectly by the Federal action and not merely the immediate area involved in the action (50 CFR Section 402.02). Further clarification is provided by the User's Guide for the Range-wide Programmatic Consultation for Indiana Bat and Northern Long-eared Bat.

   Yes

9. Will the project remove *any* suitable summer habitat[1] and/or remove/trim any existing trees **within** suitable summer habitat?

   [1] See the Service's summer survey guidance for our current definitions of suitable habitat.

   Yes

10. Will the project clear more than 20 acres of suitable habitat per 5-mile section of road/rail?

    No

11. Have presence/probable absence (P/A) summer surveys[1][2] been conducted[3][4] **within** the suitable habitat located within your project action area?

    [1] See the Service's summer survey guidance for our current definitions of suitable habitat.

    [2] Presence/probable absence summer surveys conducted within the fall swarming/spring emergence home range of a documented Indiana bat hibernaculum (contact local Service Field Office for appropriate distance from hibernacula) that result in a negative finding requires additional consultation with the local Service Field Office to determine if clearing of forested habitat is appropriate and/or if seasonal clearing restrictions are needed to avoid and minimize potential adverse effects on fall swarming and spring emerging Indiana bats.

    [3] For projects within the range of either the Indiana bat or NLEB in which suitable habitat is present, and no bat surveys have been conducted, the transportation agency will assume presence of the appropriate species. This assumption of presence should be based upon the presence of suitable habitat and the capability of bats to occupy it because of their mobility.

    [4] Negative presence/probable absence survey results obtained using the summer survey guidance are valid for a minimum of two years from the completion of the survey unless new information (e.g., other nearby surveys) suggest otherwise.

    Yes

    SUBMITTED DOCUMENTS

    - *608930_rpt_lawrence_nleb_survey_20221025 V2.pdf https://ipac.ecosphere.fws.gov/project/3TE2EOFZZRD7HNOQKIRIJ7ND64/projectDocuments/121843654*

12. Did the presence/probable absence (P/A) summer surveys detect Indiana bats and/or NLEB[1]?

    [1] P/A summer surveys conducted within the fall swarming/spring emergence home range of a documented Indiana bat hibernaculum (contact local Service Field Office for appropriate home range) that result in a negative finding requires additional consultation with the local Service Field Office to determine if clearing of forested habitat is appropriate and/or if seasonal clearing restrictions are needed to avoid and minimize potential adverse effects on fall swarming and spring emerging Indiana bats.

    No

13. Were the P/A summer surveys conducted **within** the fall swarming/spring emergence range of a documented Indiana bat hibernaculum[1]?

    [1] Contact the local Service Field Office for appropriate distance from hibernacula.

    No

14. Does the project include activities **within documented NLEB habitat**[1][2]?

    [1] Documented roosting or foraging habitat – for the purposes of this consultation, we are considering documented habitat as that where Indiana bats and/or NLEB have actually been captured and tracked using (1) radio telemetry to roosts; (2) radio telemetry biangulation/triangulation to estimate foraging areas; or (3) foraging areas with repeated use documented using acoustics. Documented roosting habitat is also considered as suitable summer habitat within 0.25 miles of documented roosts.)

    [2] For the purposes of this key, we are considering documented corridors as that where Indiana bats and/or NLEB have actually been captured and tracked to using (1) radio telemetry; or (2) treed corridors located directly between documented roosting and foraging habitat.

    No

15. Will the removal or trimming of habitat or trees occur **within** suitable but **undocumented NLEB** roosting/foraging habitat or travel corridors?

    Yes

16. What time of year will the removal or trimming of habitat or trees **within** suitable but **undocumented NLEB** roosting/foraging habitat or travel corridors occur?

    C) During both the active and inactive seasons

17. Will *any* tree trimming or removal occur **within** 100 feet of existing road/rail surfaces?

    Yes

18. Will *any* tree trimming or removal occur **between** 100-300 feet of existing road/rail surfaces?

    No

19. Are *all* trees that are being removed clearly demarcated?

    Yes

20. Will the removal of habitat or the removal/trimming of trees involve the use of **temporary** lighting?

    Yes

21. Will the removal of habitat or the removal/trimming of trees include installing new or replacing existing **permanent** lighting?

    Yes

22. Does the project include wetland or stream protection activities associated with compensatory wetland mitigation?

    Yes

23. Does the project include slash pile burning?

    No

24. Does the project include *any* bridge removal, replacement, and/or maintenance activities (e.g., any bridge repair, retrofit, maintenance, and/or rehabilitation work)?

    Yes

25. Is there *any* suitable habitat[1] for Indiana bat or NLEB **within** 1,000 feet of the bridge? (includes any trees suitable for maternity, roosting, foraging, or travelling habitat)

    [1] See the Service's current summer survey guidance for our current definitions of suitable habitat.

    Yes

26. Has a bridge assessment[1] been conducted **within** the last 24 months[2] to determine if the bridge is being used by bats?

    [1] See User Guide Appendix D for bridge/structure assessment guidance

    [2] Assessments must be completed no more than 2 years prior to conducting any work below the deck surface on all bridges that meet the physical characteristics described in the Programmatic Consultation, regardless of whether assessments have been conducted in the past. Due to the transitory nature of bat use, a negative result in one year does not guarantee that bats will not use that bridge/structure in subsequent years.

    No

27. Is the bridge **within** a known maternity colony's home range[1]?

    [1] Contact your local FWS office for more information if you are uncertain about where the nearest known maternity colony is located.

    No

28. Have presence/probable absence (P/A) summer surveys[1][2] been conducted for this project with at least one survey point **within** suitable habitat and **within** 0.25 miles of the bridge[3][4]?

    [1] See the Service's summer survey guidance for our current definitions of suitable habitat.

    [2] Presence/probable absence summer surveys conducted within the fall swarming/spring emergence home range of a documented Indiana bat hibernaculum (contact local Service Field Office for appropriate distance from hibernacula) that result in a negative finding requires additional consultation with the local Service Field Office to determine if clearing of forested habitat is appropriate and/or if seasonal clearing restrictions are needed to avoid and minimize potential adverse effects on fall swarming and spring emerging Indiana bats.

    [3] For projects within the range of either the Indiana bat or NLEB in which suitable habitat is present, and no bat surveys have been conducted, the transportation agency will assume presence of the appropriate species. This assumption of presence should be based upon the presence of suitable habitat and the capability of bats to occupy it because of their mobility.

    [4] Negative presence/probable absence survey results obtained using the summer survey guidance are valid for a minimum of two years from the completion of the survey unless new information (e.g., other nearby surveys) suggest otherwise.

    Yes, P/A summer surveys were conducted within 0.25 miles of the bridge

    SUBMITTED DOCUMENTS

    - *608930_rpt_lawrence_nleb_survey_20221025 V2.pdf https://ipac.ecosphere.fws.gov/project/3TE2EOFZZRD7HNOQKIRIJ7ND64/projectDocuments/121843654*

29. Did the presence/probable absence (P/A) summer surveys detect Indiana bats and/or NLEB[1]?

    [1] P/A summer surveys conducted within the fall swarming/spring emergence home range of a documented Indiana bat hibernaculum (contact local Service Field Office for appropriate home range) that result in a negative finding requires additional consultation with the local Service Field Office to determine if clearing of forested habitat is appropriate and/or if seasonal clearing restrictions are needed to avoid and minimize potential adverse effects on fall swarming and spring emerging Indiana bats.

    No, Indiana bats and/or NLEBs were not detected during the P/A surveys

30. Did the local Service Field Office verify[1] that this presence/probable absence (P/A) summer survey can be used for determining Indiana bat and/or NLEB absence from the bridge?

    [1] Coordination with local US Fish and Wildlife Service Field Office regarding the applicability of P/A surveys for this use is required.

    Yes, the local FWS office confirmed that this P/A survey can be used to assume Indiana bats and/or NLEBs are absent from the bridge

31. Will the bridge removal, replacement, and/or maintenance activities include installing new or replacing existing **permanent** lighting?

    Yes

32. Does the project include the removal, replacement, and/or maintenance of *any* structure other than a bridge? (e.g., rest areas, offices, sheds, outbuildings, barns, parking garages, etc.)

    No

33. Will the project involve the use of *any* **temporary** lighting in addition to the lighting already indicated for habitat removal (including the removal or trimming of trees), or bridge/structure removal, replacement or maintenance activities?

    Yes

34. Is there *any* suitable habitat **within** 1,000 feet of the location(s) where **temporary** lighting (other than the lighting already indicated for habitat removal (including the removal or trimming of trees) or bridge/structure removal, replacement or maintenance activities) will be used?

    Yes

35. Will the project install *any* new or replace any existing **permanent** lighting in addition to the lighting already indicated for habitat removal (including the removal or trimming of trees) or bridge/structure removal, replacement or maintenance activities?

    Yes

36. Is there *any* suitable habitat **within** 1,000 feet of the location(s) where **permanent** lighting (other than the lighting already indicated for habitat removal (including the removal or trimming of trees) or bridge/structure removal, replacement or maintenance activities) will be installed or replaced?

    Yes

37. Does the project include percussives or other activities (**not including tree removal/ trimming or bridge/structure work**) that will increase noise levels above existing traffic/ background levels?

    Yes

38. Will the activities that use percussives (**not including tree removal/trimming or bridge/ structure work**) and/or increase noise levels above existing traffic/background levels be conducted *during* the active season[1]?

    [1] Coordinate with the local Service Field Office for appropriate dates.

    Yes

39. Will *any* activities that use percussives (**not including tree removal/trimming or bridge/ structure work**) and/or increase noise levels above existing traffic/background levels be conducted *during* the inactive season[1]?

    [1] Coordinate with the local Service Field Office for appropriate dates.

    Yes

40. Are *all* project activities that are **not associated with** habitat removal, tree removal/ trimming, bridge and/or structure activities, temporary or permanent lighting, or use of percussives, limited to actions that DO NOT cause any additional stressors to the bat species?

    Examples: lining roadways, unlighted signage , rail road crossing signals, signal lighting, and minor road repair such as asphalt fill of potholes, etc.

    Yes

41. Will the project raise the road profile **above the tree canopy**?

    No

42. Are the wetland or stream protection activities associated with compensatory wetland/ stream mitigation portion of this project consistent with a Not Likely to Adversely Affect determination in this key?

    Automatically answered
    Yes, because your activities associated with compensatory wetland/stream mitigation activities do not clear suitable summer habitat and are not within 0.5 miles of Indiana bat or NLEB hibernaculum.

43. Are the project activities that use percussives (not including tree removal/trimming or bridge/structure work) consistent with a Not Likely to Adversely Affect determination in this key?

    Automatically answered
    Yes, because the activities are within 300 feet of the existing road/rail surface, greater than 0.5 miles from a hibernacula, and conducted during the active season within undocumented habitat.

44. Are the project activities that use percussives (not including tree removal/trimming or bridge/structure work) and/or increase noise levels above existing traffic/background levels consistent with a No Effect determination in this key?

    Automatically answered
    Yes, because the activities are within 300 feet of the existing road/rail surface, greater than 0.5 miles from a hibernacula, and conducted during the inactive season

45. Is the location of this project consistent with a Not Likely to Adversely Affect determination in this key?

    Automatically answered
    Yes, because no bats were detected during presence/probable absence surveys conducted during the summer survey season and outside of the fall swarming/spring emergence periods. Additionally, all activities were at least 0.5 miles from any hibernaculum.

46. Is the bridge removal, replacement, or maintenance activities portion of this project consistent with a No Effect determination in this key?

    Automatically answered
    Yes, because the bridge has been assessed using the criteria documented in the BA and no signs of bats were detected

47. **General AMM 1**
    Will the project ensure *all* operators, employees, and contractors working in areas of known or presumed bat habitat are aware of *all* FHWA/FRA/FTA (Transportation Agencies) environmental commitments, including all applicable Avoidance and Minimization Measures?

    Yes

Project Questionnaire

1. Have you made a No Effect determination for *all* other species indicated on the FWS IPaC generated species list?

   N/A

2. Have you made a May Affect determination for *any* other species on the FWS IPaC generated species list?

   N/A

3. How many acres[1] of trees are proposed for removal between 0-100 feet of the existing road/rail surface?

   [1] If described as number of trees, multiply by 0.09 to convert to acreage and enter that number.

   1.5

4. Please describe the proposed bridge work:

   Bridge No. L-04-030 – LMRC Rail Trail over Manchester Street:
   Proposed superstructure replacement of a single-span steel through girder bridge. The existing bridge, previously removed, will be replaced with a prefabricated steel through girder superstructure with a span of 63' and a vertical clearance of 14'-10". The existing abutment will remain in place. Cast-in-place concrete abutment caps and wingwalls will be constructed on top of the existing abutments and wingwalls. The proposed superstructure will carry a 12' wide shared use path.

   Bridge No. L-04-032 – LMRC Rail Trail over Merrimack River:
   Proposed rehabilitation of an existing six-span steel deck truss. The deck of the existing bridge, spanning a total of approx. 92', will be replaced with deck panels. Existing timber ties and steel rails will be removed and replaced with a 29.5' wide precast concrete deck. The proposed deck will carry a 12' wide shared use path and a 15.5' rest area. The existing steel truss will largely remain the same. A select group of steel stringers will be replaced and the entire superstructure will be cleaned and painted. The vertical clearance over the Merrimack River will remain the same.

   Bridge No. L-04-045 – LMRC Rail Trail over South Canal:
   Proposed rehabilitation of an existing single span steel girder bridge. The deck of the existing bridge, spanning approx. 63', will be replaced with a cast-in-place concrete deck. Existing timber ties and steel rails will be removed and replaced with a 22.5' wide C.I.P. concrete deck. The proposed deck is 22.5' wide with a 20.5' clear width . The existing steel

girders will remain and the entire superstructure will be cleaned and painted. The vertical clearance over the South canal will remain the same.

5. Please state the timing of all proposed bridge work:

   Summer of 2024 – Fall of 2026

Avoidance And Minimization Measures (AMMs)

This determination key result includes the committment to implement the following Avoidance and Minimization Measures (AMMs):

GENERAL AMM 1

Ensure all operators, employees, and contractors working in areas of known or presumed bat habitat are aware of all FHWA/FRA/FTA (Transportation Agencies) environmental commitments, including all applicable AMMs.

Determination Key Description: FHWA, FRA, FTA Programmatic Consultation For Transportation Projects Affecting NLEB Or Indiana Bat

This key was last updated in IPaC on December 01, 2022. Keys are subject to periodic revision.

This decision key is intended for projects/activities funded or authorized by the Federal Highway Administration (FHWA), Federal Railroad Administration (FRA), and/or Federal Transit Administration (FTA), which may require consultation with the U.S. Fish and Wildlife Service (Service) under Section 7 of the Endangered Species Act (ESA) for the endangered **Indiana bat** (*Myotis sodalis*) and the threatened **Northern long-eared bat** (NLEB) (*Myotis septentrionalis*).

This decision key should only be used to verify project applicability with the Service's February 5, 2018, FHWA, FRA, FTA Programmatic Biological Opinion for Transportation Projects. The programmatic biological opinion covers limited transportation activities that may affect either bat species, and addresses situations that are both likely and not likely to adversely affect either bat species. This decision key will assist in identifying the effect of a specific project/activity and applicability of the programmatic consultation. The programmatic biological opinion is not intended to cover all types of transportation actions. Activities outside the scope of the programmatic biological opinion, or that may affect ESA-listed species other than the Indiana bat or NLEB, or any designated critical habitat, may require additional ESA Section 7 consultation.

IPaC User Contact Information

Agency: Massachusetts Department of Transportation
Name: Julia Hoogeboom
Address: 10 Park Plaza
City: Boston
State: MA
Zip: 02116
Email julia.a.hoogeboom@dot.state.ma.us
Phone: 8574452880

Lead Agency Contact Information

Lead Agency: Federal Highway Administration

DOCUMENT A00873

United States Coast Guard

Surface Transportation and Uniform Relocation Assistance Act (STURRA)

STURAA Exemption

STURAA Letter Application	Pages 3 through 26
STURAA FHWY letter to USCG	Pages 27 through 28
STURAA USCG Approval	Pages 29 through 30

THIS PAGE IS INTENTIONALLY LEFT BLANK

Maura Healey, Governor
Kimberley Driscoll, Lieutenant Governor
Monica Tibbits-Nutt, Secretary & CEO
Jonathan L. Gulliver, Highway Administrator

MassDOT
Massachusetts Department of Transportation
Highway Division

December 7, 2023

Joi Singh, Division Administrator
Federal Highway Administration
220 Binney Street, 9th Floor
Cambridge, MA 02142

Attn: Emily Hennessy, District 4 Area Engineer

Re: **MassDOT Project 608930; Lawrence - Manchester Rail Corridor (LMRC) Rail Trail Bridge Rehabilitation – LMRC Rail Trail over Merrimack River; STURAA Exemption**

Dear Administrator Singh:

MassDOT is respectfully resubmitting this revised request (originally sent on 9/14/2023) for your preliminary determination on the above referenced project's qualification for a STURAA Exception under 23 U.S.C. 144 (c) (2) and is hereby requesting the U.S. Coast Guard Division Bridge Office review and provide written concurrence with this determination. The project includes rehabilitation of the existing bridge, which carries the proposed Lawrence Manchester Rail Corridor (LMRC) Rail Trail over the Merrimack River in Lawrence, Massachusetts (see Appendix).

The Manchester and Lawrence Railroad Bridge (Bridge No. L-04-032) is a six span, 550-foot open deck rail bridge with timber ties. The rail bridge consists of a single set of railroad tracks and contains utility and telecommunication cables attached to the bridge within the right-of-way. Each symmetrical span consists of four (4) built-up trusses. The bottom chords consist of six (6) forged wrought iron pinned eyebar tension members. The diagonal tension members are also pinned eyebars consisting of either two (2) or four (4) eyebars per panel. The top chord and vertical members are comprised of built-up steel angles, plates, and lacing bars. There are eight (8) built-up steel floorbeams in each span, one (1) per panel point. In Spans 1 through 4 there are nine (9) rolled steel stringers per panel. In Spans 5 and 6, in addition to the nine (9) stringers in Spans 1 to 4, there are additional stringers present in several panels.

The bridge superstructure is supported on granite block piers and abutments. At the abutments, the stringers extend from the end truss panel to the top of each backwall.

Following the abandonment of the railroad line, the railroad bridge has remained in place without apparent alterations (see Appendix). Portions of the bridge are covered in overgrown vegetation, and it is currently unknown whether the corridor is actively maintained by the MBTA or the City. Additionally, the areas around the abutments have deteriorated and need maintenance to bring the approaches back to grade.

The city is proposing the Lawrence Rail Trail Project, which is the conversion of the existing, abandoned railroad bed to a rail trail bike and pedestrian path along the LMRC in Lawrence, MA. Conversion of the abandoned railroad corridor will provide an alternative transportation route connecting the City of Methuen rail trail and the regional trail network, therefore increasing public use of the LMRC. The project's construction will be funded by MassDOT using Federal aid CMAQ funding and is on the state's Transportation Improvement Program to be advertised in Federal Fiscal Year 2024 (FFY24).

Ten Park Plaza, Suite 4160, Boston, MA 02116
Tel: 857-368-4636, TTY: 857-368-0655
mass.gov/massdot

MassDOT Project 608930; Lawrence - Manchester Rail Corridor (LMRC) Rail Trail Bridge Rehabilitation – LMRC Rail Trail over Merrimack River; STURAA Exemption

On the railroad bridge, the proposed construction involves the removal of the existing tracks and timber ties, relocation of all existing utilities, installation of precast concrete deck panels, installation of a paved pedestrian path, installation of bridge railings, and landscaping work. All existing cables and pipelines except for the steam line, which will be entirely removed, will be relocated to the easternmost section of the bridge. After the relocation of existing cables and pipelines, precast panels will be installed. Additional work on bridge approaches will involve the placement of fill (less than 1 cubic foot) to bring the area around the abutments back to grade. The Project does not involve any substructure alteration or changes to the existing bridge vertical and horizontal clearances. A partial plan set of the 75% design plans for the Project are provided as an attachment.

This bridge rehabilitation project will not entail work within Waters of the United States, and therefore will not require a Pre-Construction Notification permit from the U.S. Army Corps of Engineers nor a 401 Water Quality Certification from the Massachusetts Department of Environmental Protection (314 CMR 9.00).

Through coordination with the city, we have learned that there is no Harbor Master designated in Lawrence (see Appendix). As such, MassDOT has prepared the attached navigation survey to the best of our ability based on our understanding of site conditions and while also cross referencing some information that was previously documented by the Haverhill Harbor Master who prepared a navigation survey for a recently completed bridge replacement project on I-495 over the Merrimack River (see Appendix).

The project site is not located within the tidally influenced portions of the Merrimack River as documented by the U.S. Army Corps of Engineers. The U.S. Army Corps of Engineers cites that the Merrimack River to the New Hampshire state line is “navigable” in Massachusetts. At the project site location however, the river is not used by recreational, fishing, or other vessels greater than 21 feet in length, nor is it used to transport interstate or foreign commerce. The subject bridge is also not susceptible for use in its natural condition or by reasonable improvement (as currently proposed) to transport interstate or foreign commerce. Please note that the Great Stone Dam is located immediately upstream of the subject bridge. This prohibits boat traffic in the subject bridge vicinity particularly for boating downstream travelling easterly. Furthermore, as this structure is further upstream than the I-495 bridge in Haverhill, we believe there would be greater constraints for large vessel travel upstream of this location.

If you have any questions, please contact Timothy Dexter at (857) 274-8735 or timothy.dexter@dot.state.ma.us.

Sincerely,

Samantha L. Dolabany
Acting Director of Environmental Services

MassDOT Project 608930; Lawrence - Manchester Rail Corridor (LMRC) Rail Trail Bridge Rehabilitation – LMRC Rail Trail over Merrimack River; STURAA Exemption

Appendix: Locus Map
Navigability Survey
Partial Plan Set
Site Photographs
Email correspondence
Reference Navigability Survey – Haverhill I-495 over the Merrimack River

Cc: Timothy Dexter, MassDOT Environmental
Lawrence Cash, MassDOT Project Manager
Melissa Lenker, MassDOT Wetlands Unit
Jody Trunfio, TEC

U.S.Department of Transportation
Federal Highway Administration

Assessment and Response Checklist and Flowchart for Applying 23 U.S.C. § 144(c)(2) exceptions to Coast Guard Bridge Permits

INSTRUCTIONS FOR USE

This form provides the process for FHWA's preliminary determination to make an exception under 23 U.S.C. § 144(c)(2) to Coast Guard bridge permitting authorities. It is recommended that State DOT and/or FHWA division offices complete this form.

Section V of the 2014 USCG-FHWA Memorandum of Agreement (MOA) provides that FHWA makes the preliminary exception determination, followed by Coast Guard review to identify issues or concerns with FHWA's preliminary determination. The preliminary determination shall be made at an early stage of project development (as soon as the information is available to the applicant) so that coordination with the local Coast Guard District Bridge Office (DBO) can be accomplished before or during environmental processing (23 CFR Part 650.805(a)).

If the DBO identifies issues or concerns with the determination of the FHWA Division Office, he/she will identify the area of concern by marking the appropriate answer in the "**DBO Concerns**" areas included in this checklist. The DBO will also include written comments **"DBO Comments"** and supporting documentation with this form and return it to the FHWA Division Office. Any disputes resulting from this exception determination process will be resolved in accordance with the Dispute Resolution Section of the 2014 USCG-FHWA MOA.

When both the DBO and FHWA Division Office agree that a 23 U.S.C. 144(c)(2) exception applies to a project, the DBO will provide written concurrence to the FHWA division office. In addition, the DBO will identify if the proposed bridge will require the establishment, maintenance, and operation of lights and signals as required by 14 U.S.C. § 85 and 33 CFR Part 118 at that time.

The use of 23 U.S.C. § 144(c)(2) exceptions cannot be delegated to state transportation agencies as part of a NEPA assignment agreement.

1. Name of waterway:

   Merrimack River

2. Has the waterway at the project location determined to be navigable waters of the United States per 33 CFR Part 2.36?

   ☒ Yes ☐ No ☐ Do Not Know

   (If "**No**", then no USCG jurisdiction. If you do not know, contact DBO for confirmation of waterway status.)

3. At proposed site, mileage along waterway measured from mouth or confluence:

   ~26 miles

4. Waterway is a tributary of N/A at mile (if applicable).

U.S.Department of Transportation
Federal Highway Administration

Assessment and Response Checklist and Flowchart for Applying 23 U.S.C. § 144(c)(2) exceptions to Coast Guard Bridge Permits

Geographical location (city, state, county): Lawrence, MA, Essex County

5. Lat-Long coordinates (if known, as precise as possible):
   a. Latitude: 42° 42' 4.5216" (N) (Example: 40° 48' 3.49" N)
   b. Longitude: -71° 9' 3.204" (W) (Example: -73° 47' 16.19" W)
6. Is there an existing bridge at, or near the above location?
   ☒ Yes ☐ No (if **"Yes"** please answer questions 7a-7b)
   a. Does this bridge have a USCG or Army Corps of Engineers permit?
      ☐ Yes ☐ No ☒ Do Not Know
   b. Please provide vertical and horizontal clearances at:
      ☒ Normal Pool ☐ Mean High Water ☐ Ordinary High Water
      Vertical: 16.5 (feet)
      Horizontal: 77 (feet) Datum: NAD 83
7. Is the waterway tidal (As defined by the process outlined on pages 7-8)?
   ☐ Yes ☒ No **DBO Concerns** ☐ **Yes** ☐ **No**
   DBO Comments:
8. Is the waterway used by recreational, fishing or other vessels greater than 21 feet in length?
   ☐ Yes ☒ No **DBO Concerns** ☐ **Yes** ☐ **No**
   DBO Comments:
9. Is the waterway used to transport interstate or foreign commerce? (If **Yes**, permit might be required)
   ☐ Yes ☒ No ☐ Do Not Know **DBO Concerns** ☐ **Yes** ☐ **No**
   DBO Comments:
11. Is the waterway susceptible for use in its natural condition or by reasonable improvement as a means to transport interstate or foreign commerce? (If **Yes,** permit might be required)
   ☐ Yes ☒ No **DBO Concerns** ☐ **Yes** ☐ **No**
   DBO Comments:
12. Are there any Army Corps of Engineers permitted structures (piers, docks, dams,

U.S.Department of Transportation
Federal Highway Administration

Assessment and Response Checklist and Flowchart for Applying 23 U.S.C. § 144(c)(2) exceptions to Coast Guard Bridge Permits

powerlines) on the waterway? [1] (contact USCG and/or Army Corps of Engineers to verify] (if **yes**, please attach document with names + locations (mile #))

☐ Yes ☐ No ☒ Do Not Know **DBO Concerns** ☐ **Yes** ☐ **No**

DBO Comments:

Waterway information at proposed bridge site (if available/applicable)

13. Water depth at high tide (ft):

    N/A

14. Water depth at normal pool (ft):

    8.2

15. Water depth at MLW or MLLW (ft):

    Unknown; varies due to presence of upstream dam

16. Tidal range MHW to MLW or MHHW to MLLW (ft):

    N/A

17. Datum used for depths:

    NAVD 88

[1] This question seeks to determine whether the Army Corps of Engineers has asserted jurisdiction over the waterway or reach thereof by the issuance of a Jurisdictional Determination, or the issuance of permits of any type including those for structures under Section 10 of the Rivers and Harbors Act (33 U.S.C. § 403), or through any other USACE permitting authority including the Clean Water Act § 404.

U.S.Department of Transportation
Federal Highway Administration

Assessment and Response Checklist and Flowchart for Applying 23 U.S.C. § 144(c)(2) exceptions to Coast Guard Bridge Permits

Additional Documentation

Please include the following information when submitting to the DBO:

☒ Location Map (8 ½" x 11")

☒ Photo of existing bridge (if any) or proposed bridge location taken from the prospective of the waterway

MassDOT Points of Contact:
- Tim Dexter, Environmental Program Engineer (timothy.dexter@dot.state.ma.us; 857 274 8735)
- Melissa Lenker, Wetlands & Waterways Supervisor (melissa.lenker@dot.state.ma.us; 978 429 1772)

NEXT STEP:

When both the DBO and FHWA Division Office agree that the 144(c)(2) exception applies to a project, the DBO will write a letter to that effect to the FHWA Division Office, attaching the completed checklist. In addition, in that letter the DBO will identify if the proposed bridge will require the establishment, maintenance, and operation of lights and signals as required by 14 U.S.C. § 85 and 33 CFR Part 118.

U.S.Department of Transportation
Federal Highway Administration

Assessment and Response Checklist and Flowchart for Applying 23 U.S.C. § 144(c)(2) exceptions to Coast Guard Bridge Permits

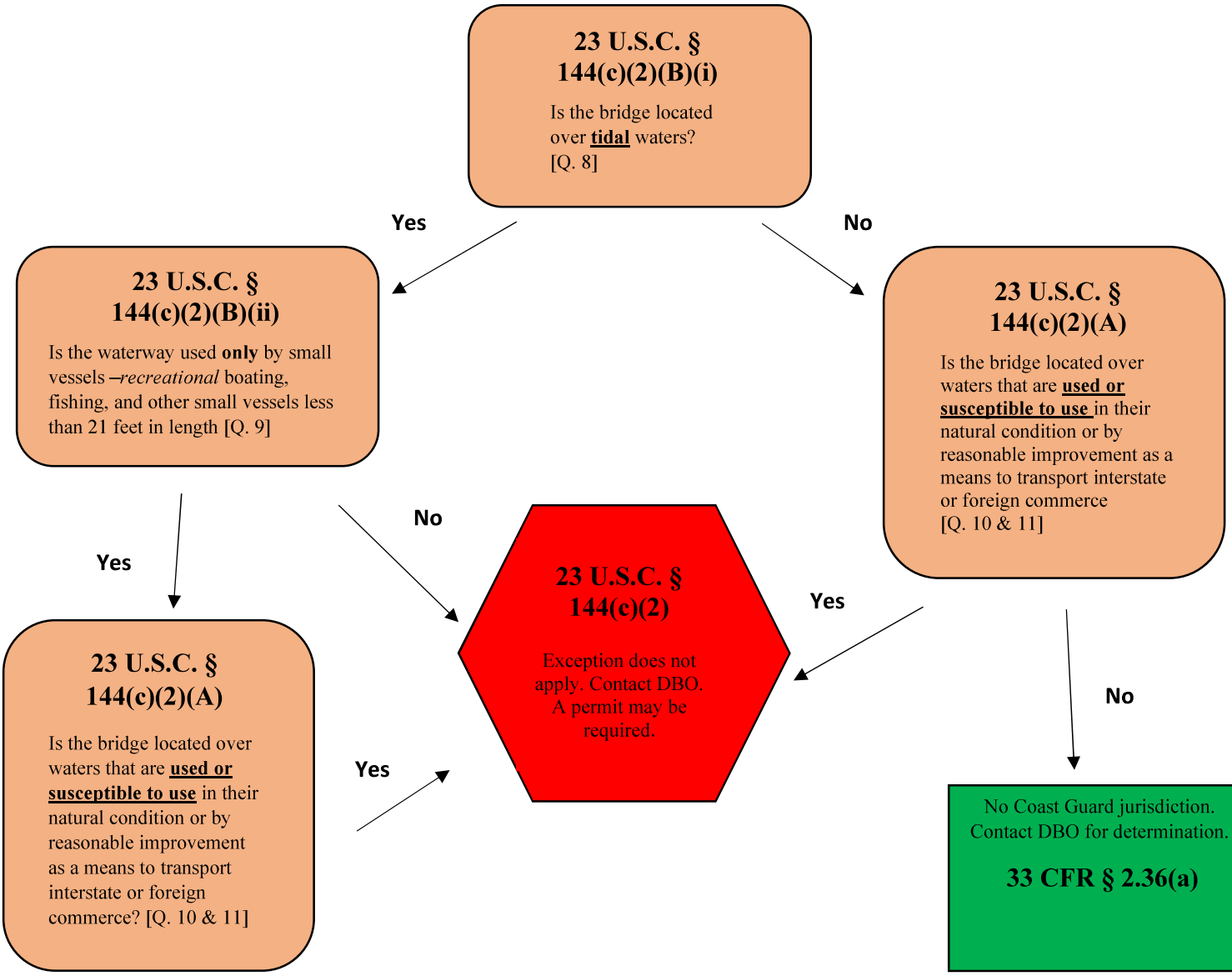

Generally, 23 U.S.C. § 144(c)(2) applies:

- When the waterway is tidal and;
  - Boats using the waterway are less than 21 feet in length; and
  - Waterway is not used or susceptible to use for interstate or foreign commerce
  - Exceptions may be warranted on case-by-case basis

U.S.Department of Transportation
Federal Highway Administration

Assessment and Response Checklist and Flowchart for Applying 23 U.S.C. § 144(c)(2) exceptions to Coast Guard Bridge Permits

Navigable waters of the U.S. for Coast Guard Jurisdiction

When Coast Guard navigability determinations are made in accordance with 33 CFR 2.36, they will be maintained at each Coast Guard District office and available for public review. These determinations may be modified or reversed by Congress or a federal court with jurisdiction over the waterway at issue.

33 CFR 2.36(a)

(a) Except as provided in paragraph (b) of this section, *navigable waters of the United States, navigable waters,* and *territorial waters* mean, except where Congress has designated them not to be navigable waters of the United States:

(1) Territorial seas of the United States;

(2) Internal waters of the United States that are subject to tidal influence; and

(3) Internal waters of the United States not subject to tidal influence that:

(i) Are or have been used, or are or have been susceptible for use, by themselves or in connection with other waters, as highways for substantial interstate or foreign commerce, notwithstanding natural or man-made obstructions that require portage, or

(ii) A governmental or non-governmental body, having expertise in waterway improvement, determines to be capable of improvement at a reasonable cost (a favorable balance between cost and need) to provide, by themselves or in connection with other waters, as highways for substantial interstate or foreign commerce.

U.S.Department of Transportation
Federal Highway Administration

Assessment and Response Checklist and Flowchart for Applying 23 U.S.C. § 144(c)(2) exceptions to Coast Guard Bridge Permits

Process for Determining "Tidal Waters" for 144(c)(2) Exceptions

1. 23 U.S.C. § 144(c)(2) provides that a Coast Guard bridge permit is not required for projects that are over waters which are:

   a) **Not used and are not susceptible to** use in the natural condition of the bridge or by reasonable improvement as a means to transport interstate or foreign commerce; **and** are
   b) Not tidal; or
   c) If tidal, used by only recreational boating, fishing, and other small vessels that are less than 21 feet in length.

2. If 23 U.S.C. § 144(c)(2)(a) criteria are not met, the exception does not apply. As such, the tidal status of a waterway has no impact on a 23 U.S.C. § 144(c)(2) exception determination.
3. To determine whether a waterway is "tidal" for the purposes of the above statute, the coast Guard District Bridge Office with jurisdiction over the project will accept any of the below sources of information as sufficient to establish the tidal status of the reach of waterway in question. These determinations may be done as part of a 23 U.S.C. § 144(c)(2)(b) or (c) determination in consultation and concurrence with the applicant and Federal Highway Administration Office:
   a. Data from a NOAA Tidal Datum/Buoy, U.S. Army Corps of Engineers Tide Gauge, or other Federally-maintained data collection system showing such data that quantitatively evinces tidal influence in the project area as defined in 33 CFR § 2.34, or,
   b. A report from an official "state hydrologist" or other analogous official employed by the state government wherein the project lies, or,
   c. Physically-observable and recordable visual evidence of a "high tide line" including, but limited to:
      i. A line of oil or scum along shore objects, a more or less continuous deposit of fine shell or debris on the foreshore or berm, other physical markings or characteristics, vegetation lines, tidal gages, or other suitable means that delineate the general height reached by a rising tide. The line encompasses spring high tides and other high tides that occur with periodic frequency but does not include storm surges in which there is a departure from the normal or predicted reach of the tide due to the piling up of water against a coast by strong winds such as those accompanying in a hurricane or other intense storm. (33 CFR § 328.3)

U.S.Department of Transportation
Federal Highway Administration

Assessment and Response Checklist and Flowchart for Applying 23 U.S.C. § 144(c)(2) exceptions to Coast Guard Bridge Permits

4. Any disputes resulting from or related to the above determination process shall be resolved per the Dispute Resolution section of the 2014 USCG-FHWA Memorandum of Agreement

Appendix

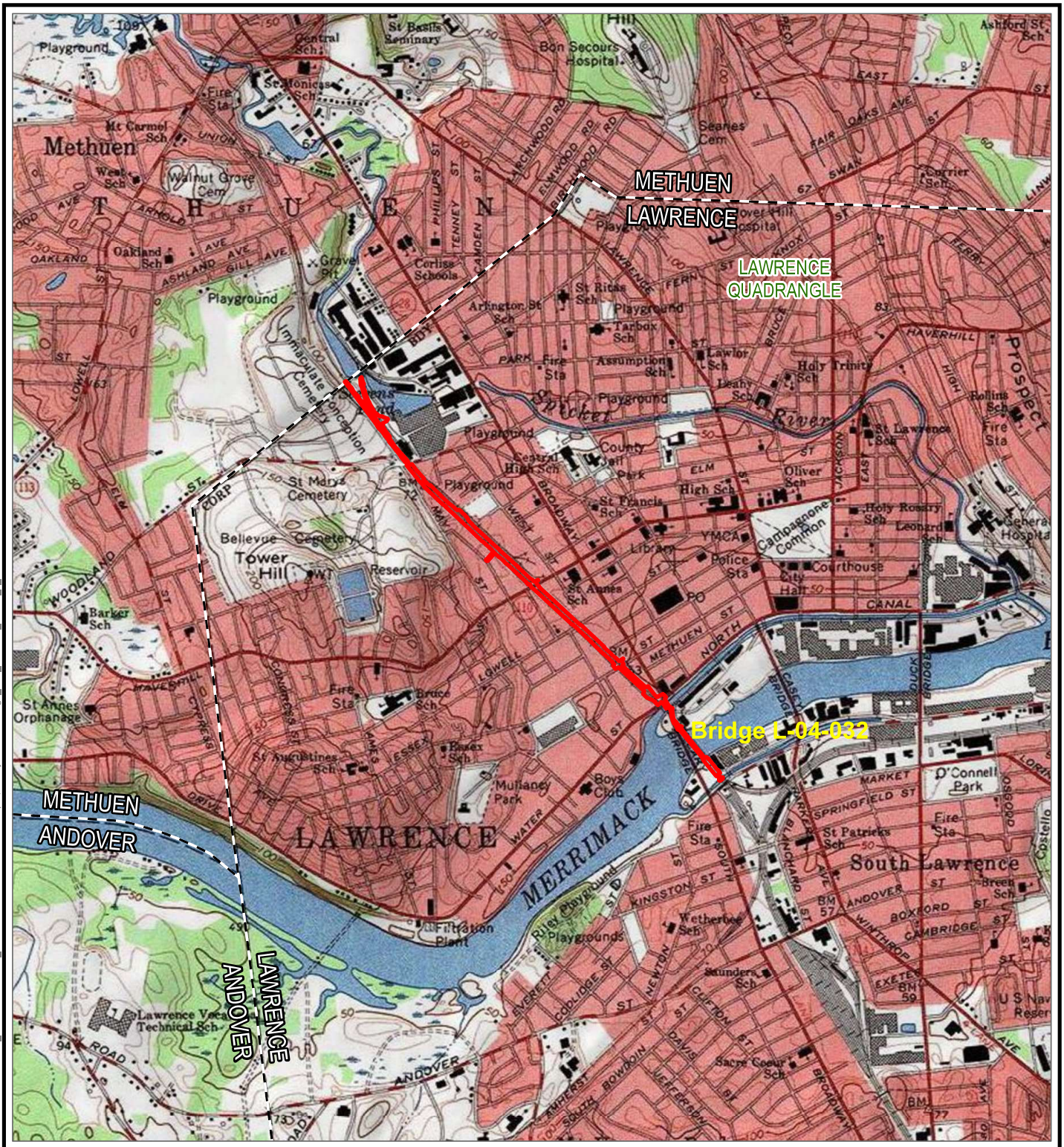

BASE MAP: USA TOPOGRAPHIC MAP, ESRI
DATA SOURCES: TRC

PROJECT:
LAWRENCE RAIL TRAIL

TITLE:
SITE LOCATION MAP
LAWRENCE, MA

DRAWN BY:	S. MOTURI	PROJ. NO.:	274047.0000.0000
CHECKED BY:	R. SPRING		
APPROVED BY:	C. MARTIN		**FIGURE 1**
DATE:	FEBRUARY 2023		

TRC
650 SUFFOLK ST,
WANNALANCIT MILLS,
LOWELL, MA 01854

FILE: LawrenceRailTrail

Coordinate System: NAD 1983 StatePlane Massachusetts Mainland FIPS 2001 Feet: Map Rotation: 0
-- Saved By: SMOTURI on 2/16/2023, 15:32:45 PM: File Path: T:\1-PROJECTS\LMRC\274047_LawrenceRailTrail_MA\2-APRX\LawrenceRailTrail.aprx: Layout Name: Fig1_Site_Location_USGS_8_5x11P

The Commonwealth of Massachusetts

Massachusetts Department of Transportation

NAVIGABILITY SURVEY
For
Railroad Bridge over Merrimack River; Lawrence, MA

Directions: This form must be completed and signed by the local harbormaster where a proposed project involves the reconstruction or replacement of an existing bridge over a US Coast Guard navigable waterway.

1. From your personal observations, please describe the current extent of recreational and/or commercial boating use of this waterbody, particularly upstream of the above bridge.

   Activity of recreational and/or commercial boating is limited in the vicinity of the bridge due to the presence of an active crest gate servicing the hydroelectric facility due west of the subject bridge.

2. Are there any moorings, boat ramps, marinas, etc., located up river of the bridge? Please describe.

   Riverfront State Park, located on Rowe Street, is directly next to the Merrimack River, and has a marina with public boat launch. Riverfront State Park is also home to the Greater Lawrence Community Boating Program, which has been teaching safe boating for over 25 years (source https://www.cityoflawrence.com/facilities/facility/details/Riverfront-State-Park-25).

3. Do boats 21 feet in length or greater navigate under the bridge?

   No.

4. Are the banks of the river at the bridge currently or potentially used for launching vessels or for putting in canoes or kayaks? Please explain.

   No.

5. Are there any historical records of vessels using the river for recreational and /or commercial purposes? If so, please explain the extent of the use.

   As referenced in the attached Navigation Survey prepared by the Haverhill Harbormaster for a project in 2016, vessels would commute from Haverhill to Lawrence in the 1800's.

6. If information is available, please provide the elevations of mean low, mean high and spring high tides where the bridge crosses the river.

Spring High Tide:

Mean Low Tide:

Mean High Tide:

We have received the following hydraulic information from MassDOT for the project:
10yr flood elevation – 26.2 feet (NAVD 88)
100yr flood elevation – 35.2 feet (NAVD 88)

7. Please provide information as to whether there are any active shellfish resources in the immediate area of the bridge?

There are no active shellfish resources in the immediate area of the bridge.

Signature: _____ Date: 3/28/2023

From: Daniel McCarthy
To: Jody Trunfio
Subject: Re: City Harbor Master?
Date: Tuesday, February 7, 2023 2:11:41 PM
Attachments: image002.png
image003.png
image004.png
image005.png

I spoke with several parties and there is no designated harbor master.

Dan

Daniel A. McCarthy
Land Use Planner/ Conservation Agent
City of Lawrence
Office of Planning & Development
12 Methuen Street
Lawrence, MA 01840
Ph: (978) 620-3505
FAX: (978) 722-9441
dmccarthy@cityoflawrence.com

From: Jody Trunfio <JTrunfio@theengineeringcorp.com>
Sent: Tuesday, February 7, 2023 1:33 PM
To: Daniel McCarthy <DMcCarthy@CITYOFLAWRENCE.COM>
Subject: City Harbor Master?

CAUTION: This email originated from outside of the organization. Do not click links, open attachments or respond to this email unless you recognize the sender and know the content is safe.

Dan,

Does the City have a designated harbor master for the Merrimack River? MassDOT is inquiring as it relates to some of the permitting we will need to secure as part of the Rail Trail project, and more specifically for the work at the Merrimack River Bridge.

If you are able to point me in the direction of who that might be, it would be greatly appreciated.

Regards,
jpt

Jody P. Trunfio, P.E., *Principal*
T 603.601.8154 x1024 | **C** 978.590.4100

jtrunfio@theengineeringcorp.com

Total Control Panel Login

To: jtrunfio@theengineeringcorp.com

Remove this sender from my allow list

From: dmccarthy@cityoflawrence.com

You received this message because the sender is on your allow list.

Photo 1

Description: (Looking North)
Typical view of the top of deck (Span 2 shown); General view.

(JT4-9)

Photo 2

Description: (Looking South)
Typical view of the underside of the bridge (Span 6 shown); General view.

(HO3-6)

Photo 3

Description: (Looking East)
West Elevation; General view.

(MS8-12)

Photo 4

Description: (Looking West)
East Elevation; General view.

(MS8-10)

Photo 5

Description: (Looking North)
North Abutment; General view.

(HO3-2)

Photo 6

Description: (Looking South)
South Abutment; General view.

(MS5-37)

LAWRENCE
LMRC RAIL TRAIL OVER MERRIMACK RIVER

STATE	FED. AID PROJ. NO.	SHEET NO.	TOTAL SHEETS
MA	-	141	225
PROJECT FILE NO.	608930		

PLAN AND ELEVATION

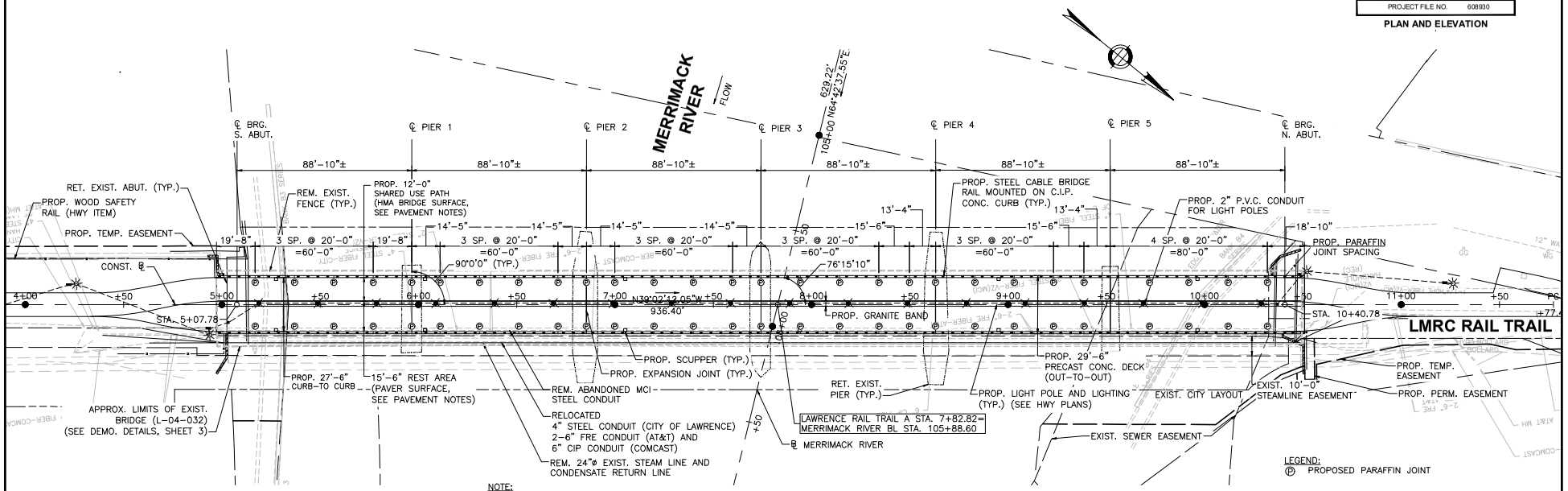

NOTE:
REFER TO SHEET 6 FOR STRINGER REPLACEMENT DETAILS.

PLAN VIEW
SCALE: ½" = 1'-0"

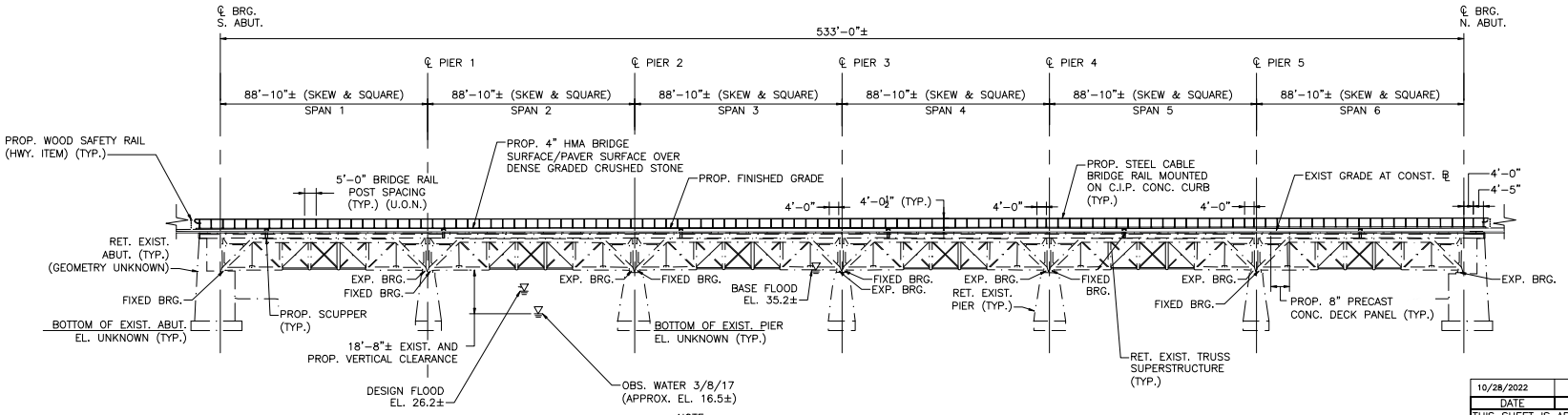

NOTE:
ALL EXISTING TRUSS BEARINGS WILL REMAIN IN PLACE AND UNDISTURBED.

ELEVATION VIEW (LOOKING SOUTH)
SCALE: ½" = 1'-0"

DATE	DESCRIPTION
10/28/2022	FIRST STRUCTURAL SUBMITTAL

THIS SHEET IS APPROVED FOR CONSTRUCTION BY MASSDOT
AUTHORIZED SIGNATORY: STATE BRIDGE ENGINEER
USE ONLY PRINTS OF LATEST DATE

608930_BR4L04032).DWG Plotted on 28-Oct-2022 12:23 PM
October 28, 2022
First Structural Submittal (S1)
A00873 - 23
Proposal No. 608930-128034

A00873 - 24

LAWRENCE
LMRC RAIL TRAIL OVER MERRIMACK RIVER

STATE	FED. AID PROJ. NO.	SHEET NO.	TOTAL SHEETS
MA	-	142	225
PROJECT FILE NO.	608930		

FRAMING PLAN

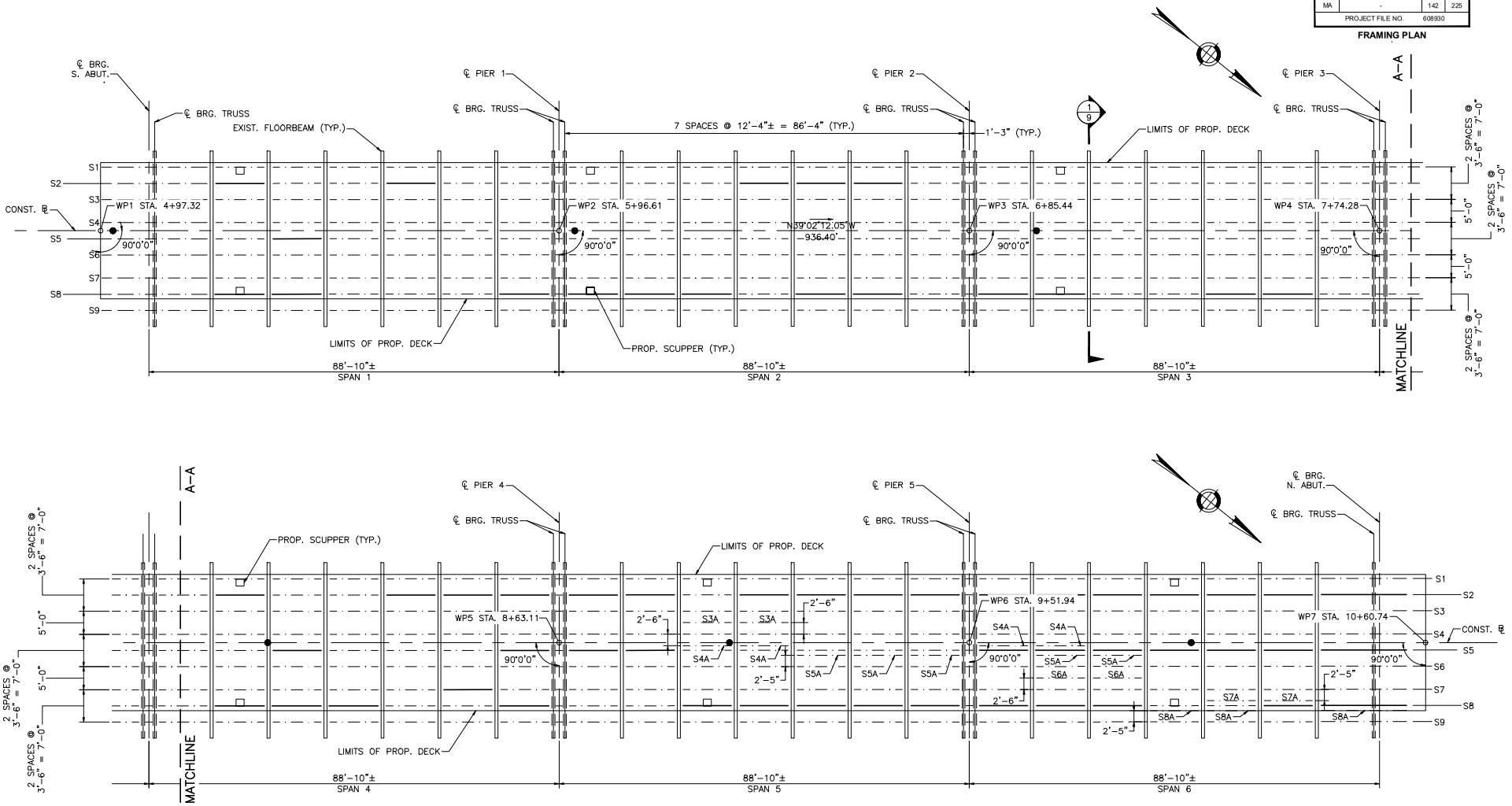

FRAMING PLAN
SCALE: 1"=10'-0"

NOTES:

1. STRINGER NOMENCLATURE AND REPLACEMENT LOCATIONS BASED ON THE WSP USA, INC. BRIDGE INSPECTION REPORT (DATED MAY 2020) AND FUTURE FOLLOW UP INSPECTIONS PRIOR TO PROJECT ADVERTISEMENT.
2. CONTRACTOR SHALL FIELD VERIFY REPLACEMENT LOCATIONS AND COORDINATE WITH ENGINEER TO DETERMINE ADDITIONAL STRINGER REPLACEMENTS AS NEEDED.
3. ALL STEEL SHALL CONFORM TO AASHTO M270 (ASTM A709) GRADE 50.
4. FOR STRINGER REPLACEMENT DETAILS, SEE SHEET 6.

LEGEND:
EXISTING STRINGER
STRINGER REPLACEMENT

10/28/2022	FIRST STRUCTURAL SUBMITTAL
DATE	DESCRIPTION

THIS SHEET IS APPROVED FOR CONSTRUCTION BY MASSDOT
AUTHORIZED SIGNATORY: STATE BRIDGE ENGINEER
USE ONLY PRINTS OF LATEST DATE

608930_BR5-8(L04032).DWG Plotted on 28-Oct-2022 12:23 PM
October 28, 2022 First Structural Submittal (S1)
Proposal No. 608930-128034

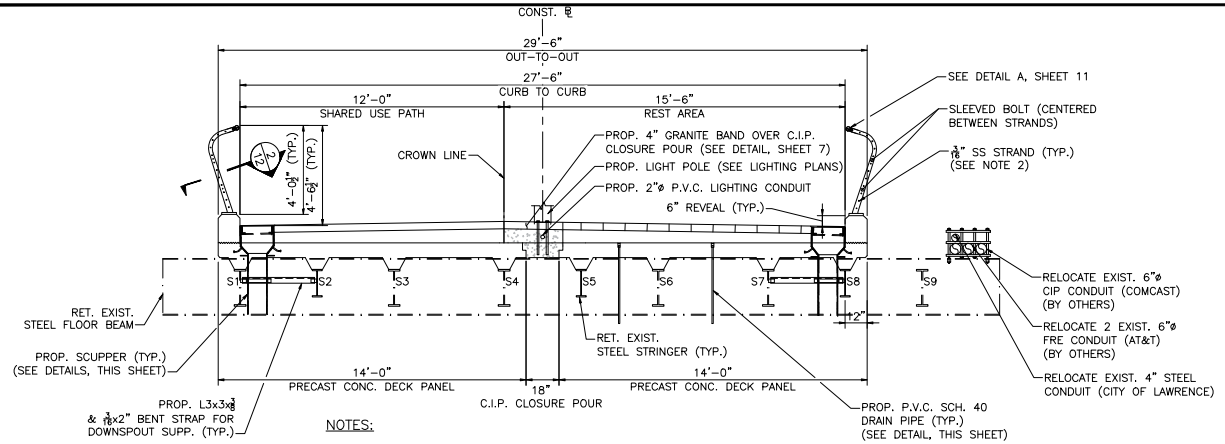

NOTES:

1. SEE SHEETS 11 & 12 FOR STEEL CABLE BRIDGE RAIL DETAILS.
2. ALL ⅜"ø SS STRANDS TO BE TYPE 316 1X19. ALL STRANDS ARE TO BE TENSIONED TO 600 POUNDS.
3. STRANDS TO BE TENSIONED USING ALL TURNBUCKLES EVENLY.
4. SEE SHEET 3 FOR UTILITY RELOCATION SEQUENCE.

SECTION 1
SCALE: ⅜" = 1'-0"

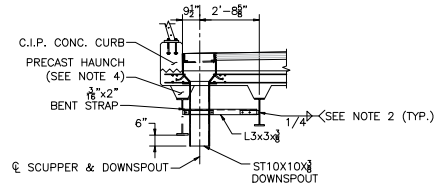

SECTION AT SAFETY CURB

NOTES:

1. ALL STEEL PLATES SHALL BE AASHTO M 270 GRADE 36 AND SQUARE TUBE SHALL BE ASTM A 500 GRADE A OR B.
2. ALL WELDS SHALL BE CONTINUOUS. ALL JOINTS SHALL BE WELDED USING TWO-SIDED ¼" FILLET WELDS OR ¼" PJP WELDS WITH A BACKING SEAL WELD, AS APPLICABLE.
3. ALL STEEL TO BE HOT-DIP GALVANIZED. 10" SQUARE TUBE TO BE GALVANIZED AND PAINTED TO MATCH COLOR OF THE STEEL GIRDERS.
4. PRECAST CONCRETE HAUNCH SHALL TERMINATE BEFORE LIMITS OF SCUPPER. SEE PRECAST DECK PANEL DETAILS SHEET 8.

SCUPPER SECTION
SCALE: ⅜" = 1'-0"

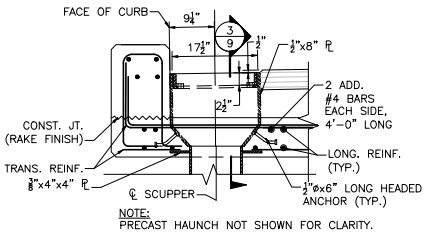

NOTE:
PRECAST HAUNCH NOT SHOWN FOR CLARITY.

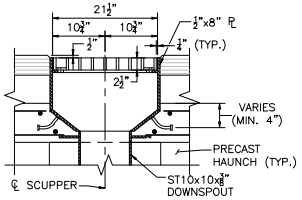

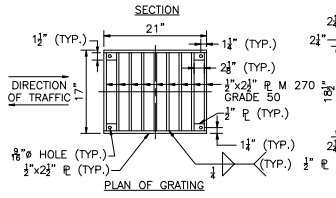

SCUPPER DETAILS
SCALE: 1" = 1'-0"

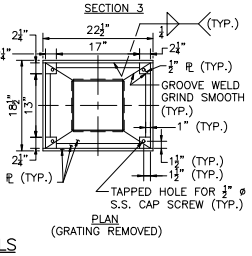

SCUPPER DETAILS
SCALE: 1" = 1'-0"

LAWRENCE
LMRC RAIL TRAIL OVER MERRIMACK RIVER

STATE	FED. AID PROJ. NO.	SHEET NO.	TOTAL SHEETS
MA	-	146	225
PROJECT FILE NO.	608930		

MISCELLANEOUS DETAILS

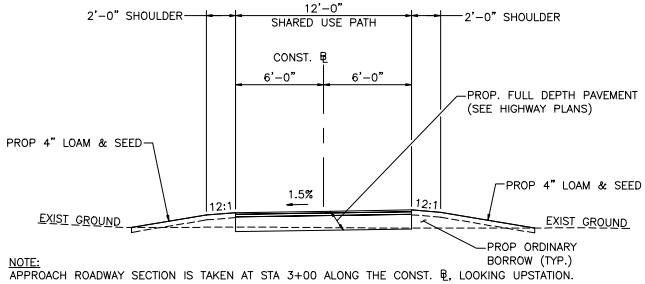

NOTE:
APPROACH ROADWAY SECTION IS TAKEN AT STA 3+00 ALONG THE CONST. ℄, LOOKING UPSTATION.

ROADWAY APPROACH SECTION
NTS

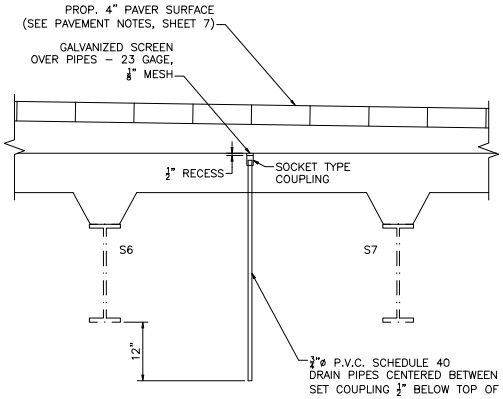

NOTE:
FOR ADD'L DRAIN PIPE DETAILS, SEE PRECAST DECK PANEL DETAILS ON SHEET 8.

DECK DRAIN PIPES
SCALE: 1" = 1'-0"

SCUPPER LOCATIONS	
STATION	OFFSET
5+27.53	13.0 LT & RT
6+03.41	13.0 LT & RT
7+05.20	13.0 LT & RT
7+94.03	13.0 LT & RT
8+95.20	13.0 LT & RT
9+96.37	13.0 LT & RT

10/28/2022	FIRST STRUCTURAL SUBMITTAL
DATE	DESCRIPTION

THIS SHEET IS APPROVED FOR CONSTRUCTION BY MASSDOT
AUTHORIZED SIGNATORY: STATE BRIDGE ENGINEER
USE ONLY PRINTS OF LATEST DATE

608930_BR9-10(L04032).DWG Plotted on 28-Oct-2022 12:23 PM
First Structural Submittal (S1) October 28, 2022
Proposal No. 608930-128034

The Commonwealth of Massachusetts

Massachusetts Department of Transportation

NAVIGABILITY SURVEY
For

_____

Directions: This form must be completed and signed by the local harbormaster where a proposed project involves the reconstruction or replacement of an existing bridge over a US Coast Guard navigable waterway.

1. From your personal observations, please describe the current extent of recreational and/or commercial boating use of this waterbody, particularly upstream of the above bridge.

   Local Fishing end of may early June

2. Are there any moorings, boat ramps, marinas, etc., located up river of the bridge? Please describe.

   1 Car top Ramp 1 Boat Ramp 3 mile up ½ mile up

3. Do boats 21 feet in length or greater navigate under the bridge?

   During High tide only

4. Are the banks of the river at the bridge currently or potentially used for launching vessels or for putting in canoes or kayaks? Please explain.

   1 - Car top Ramp at rest area

5. Are there any historical records of vessels using the river for recreational and /or commercial purposes? If so, please explain the extent of the use.

   1800's Vessels used to go to Lawrence

6. If information is available, please provide the elevations of mean low, mean high and spring high tides where the bridge crosses the river.

   Spring High Tide:

   Mean Low Tide:

   Mean High Tide:

7. Please provide information as to whether there are any active shellfish resources in the immediate area of the bridge?

   None

Signature: Michael J. Vt Date: 8/25/16

U.S. Department of Transportation
Federal Highway Administration

Massachusetts Division

220 Binney Street, 9th Floor
Cambridge, MA 02142
(617) 494-3657
(617) 494-3355
www.fhwa.dot.gov/madiv

December 11, 2023

In Reply Refer To:
HDA-MA

Jeffrey Stieb
Senior Bridge Management Specialist
First Coast Guard District
1 South Street, Building 1
New York, NY 10004-1466

Subject: Lawrence Manchester Rail Corridor Rail Trail (Project #608930)
Bridge Rehabilitation over Merrimack River
Lawrence, Massachusetts

Dear Mr. Stieb:

The Federal Highway Administration (FHWA) Massachusetts Division Office respectfully requests the concurrence of the First Coast Guard District Bridge Office with the determination of exception from U.S. Coast Guard bridge permitting for the Lawrence Manchester Rail Corridor (LMRC) Rail Trail Bridge Rehabilitation Project in Lawrence, MA.

The Massachusetts Department of Transportation has provided FHWA with documentation detailing the project's qualification for a Surface Transportation and Uniform Relocation Assistance Act of 1987 (STURAA) exception under 23 U.S.C. §144(c)(2) and 23 CFR §650.805. The FHWA Massachusetts Division Office has reviewed the project information provided and concurs with the exception determination due to the Great Stone Dam precluding the spanned waterway from interstate commerce upstream and the non-tidal nature of the waterway.

The project documentation package is attached to this communication for your reference. Please note that the package contains the Assessment and Response Checklist for your concurrence and use. If you have any further questions, feel free to contact me or Emily Hennessy of my office at (617) 494-2702. Thank you for your kind attention to this matter.

Sincerely,

Digitally signed by
JOSHUA GRZEGORZEWSKI
Date: 2023.12.11 07:57:39
-05'00'

Joshua Grzegorzewski
Field Operations Team Leader

cc: Melissa Lenker, MassDOT
Tim Dexter, MassDOT
Lawrence J. Cash, MassDOT

THIS PAGE IS INTENTIONALLY LEFT BLANK

U.S. Department of Homeland Security
United States Coast Guard

Commander
First Coast Guard District

One South Street
Battery Park Building
New York, NY 10004-1466
Staff Symbol: dpb
Phone: 516-241-5152

16211
December 13, 2023

Federal Highway Administration-Massachusetts Division
Attn: Mr. Joshua Grzegorzewski
Field Operations Team Leader
220 Binney Street, 9th Floor
Cambridge, MA 02142

Re: NV-1139: Lawrence Manchester Rail Corridor Rail Trail Bridge, Merrimack River

Dear Mr. Grzegorzewski:

This is in response to your letter dated December 11, 2023, and accompanying Checklist and Flowchart for applying 23 U.S.C. Section 144 (c) for the referenced construction project. Based upon the information provided, we concur with your determination. Although this project will not require a bridge permit, other areas of Coast Guard jurisdiction apply. The following stipulations must be met:

a. The lowest portion of the superstructure of the bridge across the waterway should clear high water pursuant to 33 CFR 115.70.

b. We have determined that bridge navigational lighting or signals under 33 CFR Part 118 will not be required at this time, however, the Coast Guard reserves the right to require lighting or signals at any time in the future should nighttime navigation increase in the vicinity of, or through the bridge.

c. Any spillage of oil or oil-based products during construction must be promptly reported to the Coast Guard by calling 1-800-424-8802.

d. This approval does not relieve the bridge owner of the obligation or responsibility for compliance with the provisions of any other law or regulation as may be under the jurisdiction of any other federal, state or local authority having cognizance of any aspect of the location, construction or maintenance for the proposed bridge.

If you have any questions, please contact Senior Bridge Management Specialist Jeffrey Stieb of my staff at 617-883-1311.

Sincerely,

FISHER.DONNA.A.1063032430 Digitally signed by FISHER.DONNA.A.1063032430 Date: 2023.12.13 12:43:22 -05'00'

D. A. FISHER
Bridge Program Manager
U.S. Coast Guard
By direction

Copy: Coast Guard Sector Boston
USACE, New England Division, Navigation Section
Timothy Dexter, MassDOT

THIS PAGE IS INTENTIONALLY LEFT BLANK

DOCUMENT A00875

POLICY DIRECTIVE P-22-001
AND
POLICY DIRECTIVE P-22-002

THIS PAGE INTENTIONALLY LEFT BLANK

massDOT Massachusetts Department of Transportation Highway Division

Number: P-22-001
Date: 9/23/22

POLICY DIRECTIVE

Jonathan Gulliver (signature on original)
HIGHWAY ADMINISTRATOR

Off-Site Stockpiling of Soil from MassDOT Construction Projects

Purpose

The purpose of this Policy Directive is to formally establish a policy and procedures for managing and stockpiling soil generated and transported from MassDOT construction projects. This Policy Directive does not supersede any Federal, State, or Local regulations.

Date of Effect

This Policy Directive is effective immediately for all projects, including active construction projects.

For active construction projects and for other projects advertised prior to October 15, 2022, changes to the contract documents needed to implement the requirements of this Policy Directive will be considered on a case-by-case basis and shall be approved by the District Highway Director, as necessary.

For projects advertised on or after October 15, 2022, MassDOT will include the requirements and implementation procedures of this Policy Directive in the construction contract documents.

Policy Requirements

This policy is intended to prevent the off-site relocation of excavated soil generated from MassDOT projects to areas near residential receptors and to control potential fugitive dusts and/or contaminants. To that end, excavated soil may not be moved from the project site without knowledge of the content of the material. Knowledge may include visual field observations for presence of staining, odor, and/or debris, screening with a photoionization detector (PID), laboratory analysis, and/or site history. Pavement millings and other non-soil materials are not subject to the requirements of this Policy Directive.

Moving soil from a MassDOT project site to a temporary off-site storage location must be approved in writing by the District Highway Director.

The Contractor must select a storage location that is at least 500 feet away from residential receptors, as defined herein to include, but not be limited to, residential dwellings, residentially

zoned property, schools, daycare facilities, playgrounds, parks, recreational areas, hospitals, elderly housing and convalescent facilities.

Temporary off-site storage of excavated soil from a MassDOT project is only permissible at a location approved and permitted by MassDOT. The temporary storage location should be located within the same municipality where the soil was excavated, where possible. Stockpiled soil must be securely covered, and appropriate measures must be taken to minimize fugitive dust and erosion.

Signs indicating the source of the soil, the date the soil was generated, and contact information must be erected and maintained until the stockpiled soils are transported to a disposal facility or reused on the project site.

Implementation Procedures

To ensure that off-site storage of excavated soils is managed properly on MassDOT projects, this policy requires the following:

1. **Off-Site Stockpile Storage Locations**
    a. The Contractor shall provide proposed off-site storage locations to the Engineer for approval at least 30 days prior to transporting soil off site. Off-site storage locations should be in the same municipality as the work site.
    b. The Contractor shall keep excavated soil on site until adequately characterized to the satisfaction of the Engineer.
    c. The Contractor shall provide notification of the approved off-site storage location to the local Board of Health and the Town Manager's/Mayor's Office at least 7-days prior to transporting soil off site.
    d. The Contractor shall provide the Engineer with at least 3-days' notice prior to transporting soil off site.
    e. For off-site storage locations on MassDOT property, the Contractor is required to obtain an Access Permit through the District Permits Office prior to storage of soil or other materials. MassDOT will issue these permits at no cost to the Contractor. Information to be submitted by the Contractor as part of the permit application shall include:
        i. A description of material to be stored off-site, including available analytical data;
        ii. A figure of the location with distances to residences and residential receptors; and
        iii. Anticipated duration of temporary storage.
    f. Stockpile locations should not be within 500 feet of residential receptors (e.g., residential dwellings, residentially zoned property, schools, daycare facilities, playgrounds, parks, recreational areas, hospitals, elderly housing and convalescent facilities).
        i. If the stockpile location must be within 500 feet of residential receptors, then soil must be less than RCS-1 (per 310 CMR 40.1600) and free of potentially hazardous or regulated items.

g. For off-site storage locations on non-MassDOT property, the Contractor must notify the property owner(s) at least 7 days prior to transporting material.
h. Exceptions to these rules will be reviewed by MassDOT and may be approved by the District Highway Director on a case-by-case basis.

2. Off-Site Stockpile Management

a. The Contractor shall keep soil stockpiles on impermeable surfaces (e.g., asphalt or concrete) or on 10-mil polyethylene sheeting.
b. The Contractor shall cover soil stockpiles with 10-mil polyethylene sheeting and surround with a berm made of hay bales, straw wattles, or similar.
    i. Piles that are actively being worked on must be covered and re-secured at the end of the work shift.
c. The Contractor shall label stockpiles with signs, including:
    i. Location of origin (including any Release Tracking Numbers)
    ii. Stockpile ID number (including MassDOT District office-assigned tracking ID, if different)
    iii. Date of initial accumulation
    iv. Applicable telephone numbers for the Contractor and MassDOT.
d. The Contractor shall mitigate fugitive dust at storage locations under the direction of an appropriately trained/certified environmental professional.
e. The Contractor shall remedy noncompliance with this policy within 48 hours.
f. The Contractor shall remedy noncompliance with this policy on the SAME DAY for potentially hazardous material, as determined by the Engineer.
g. The Contractor shall handle excavated soil according to federal, state, and local regulations.
h. The Contractor shall use appropriate shipping documents for all movements of excavated soil on public roadways (e.g., Bill of Lading, Material Shipping Record, Manifest, Asbestos Waste Shipment Record, etc.).

THIS PAGE INTENTIONALLY LEFT BLANK

massDOT Massachusetts Department of Transportation Highway Division

Number: P-22-002
Date: 9/23/22

POLICY DIRECTIVE

Jonathan Gulliver (signature on original)
HIGHWAY ADMINISTRATOR

Use of MassDOT Property for Staging and other Construction-Related Operations

Purpose

This Policy Directive is intended to address the use of MassDOT property by MassDOT Contractors for construction staging and other construction-related operations that are not specifically defined in the construction contract. Such use of MassDOT property will only be allowed if permitted by the District Office in accordance with 700 CMR 13.00, Approval of Access to MassDOT Highways and Other Property. This includes the use of MassDOT property for staging, laydown, and storage of equipment and materials, including soil excavated from a project site.

This Policy Directive requires the Contractor/applicant to obtain a Non-Vehicular Access Permit from MassDOT to use MassDOT property for these purposes.

This Policy Directive is effective immediately and applies to all MassDOT construction projects.

General Permit Considerations and Conditions

In addition to other normal MassDOT Access Permit procedures, MassDOT shall consider the following during the application, review, implementation and monitoring processes of Access Permits required by this Policy Directive:

- Storage and placement of the Contractor's equipment and materials should not be allowed within the clear zone of the roadway.
- Stockpiled soils should not be located within 500 feet of residential receptors, as defined herein to include, but not be limited to, residential dwellings, residentially zoned property, schools, daycare facilities, playgrounds, parks, recreational areas, hospitals, elderly housing and convalescent facilities.
- The Contractor/applicant shall identify the access/egress locations of the proposed storage areas. MassDOT will only approve locations determined to be safe for roadway users, construction workers and the general public.
- The Contractor may be required to submit a Traffic Management Plan and/or Lighting Plan for MassDOT review and approval as part of the permit application, depending on the proposed use of the area.

- The Contractor shall submit the permit application through MassDOT's online State Highway Access Permit System (SHAPS).
- MassDOT will waive the permit application fee for any application received from a MassDOT Contractor for any permit required by this Policy Directive and will waive any subsequent amendment and extension fees that may otherwise be required.
- MassDOT will review the permit application in accordance with applicable standard procedures and will apply standard permit terms and conditions, as necessary.
- The Resident Engineer will verify that the permit is approved before allowing the Contractor to use the affected area for the requested purpose.
- Areas permitted are for use by the approved applicant only and are not to be shared with or used by other vendors. Subcontractors specifically engaged with the applicant working on the specific MassDOT project will be allowed to use the area in accordance with the terms of the permit.
- Permits are issued on an annual basis and will require the Contractor to file for an extension each year to continue use.

Exemptions from Permit Requirements

Equipment and materials being used for active construction operations and located within the work zone of the construction contract are exempt from this permit requirement, provided they do not interfere with the safety or operation of the roadway or the work zone. Examples of these types of exempt uses are:

- Equipment and materials parked or stored within a protected (barriered) work zone.
- Materials placed in the work zone prior to same-day installation or use.
- Soils excavated temporarily and scheduled to be replaced, such as for trenching operations or for installation of drainage structures.

DOCUMENT A00876

Section 106 Clearance and USACOE

*** THIS PAGE IS INTENTIONALLY LEFT BLANK ***

RECEIVED
NOV 0 9 2023
MASS. HIST. COMM

Maura Healey, Governor
Kimberley Driscoll, Lieutenant Governor
Monica Tibbits-Nutt, Acting Secretary & CEO
Jonathan L. Gulliver, Highway Administrator

massDOT
Massachusetts Department of Transportation
Highway Division

RC.74041

November 7, 2023

CONCURRENCE Brona Simon
12/5/23
BRONA SIMON
STATE HISTORIC
PRESERVATION OFFICER
MASSACHUSETTS
HISTORICAL COMMISSION

Ms. Brona Simon
State Historic Preservation Officer
Massachusetts Historical Commission
220 Morrissey Boulevard
Boston, MA 02125

RE: Lawrence — Lawrence-Manchester Rail Corridor Rail Trail (MassDOT #608930)
Section 106 Review – No Adverse Effect
Section 4(f): Fee Taking and Permanent Easements – *de minimis* impact
Section 4(f): Temporary Occupancies – No 4(f) Use

Dear Ms. Simon:

The Massachusetts Department of Transportation (MassDOT) and the City of Lawrence propose to expend federal funds to construct a shared use path (SUP) and linear park along the former Manchester & Lawrence Railroad corridor. The SUP will extend for 1.5 miles from Merrimack Street north to the Methuen City Line, where the new shared use path will connect to the existing Methuen Rail Trail. The Lawrence Manchester Rail Corridor (LMRC) will cross the South Canal, the Merrimack River, and the North Canal on existing bridges. The corridor is currently owned by the Massachusetts Bay Transportation Authority (MBTA), except for a spur at the northerly end of the project corridor that is owned by the City.

The project's Area of Potential Effects (APE) includes several historic districts, buildings, and bridges that are either listed or eligible for listing in the National Register of Historic Places (NRHP), as described below. MassDOT has reviewed the project under the terms of the Massachusetts Statewide Programmatic Agreement for Section 106 of the National Historic Preservation Act of 1966, as amended [36 CFR Part 800.3(a)(2)], and has determined that the project will have **No Adverse Effect** on properties that are listed in or may be eligible for listing in the NRHP.

Area of Potential Effects

The project's APE includes two historic districts that are listed in the NHRP: a 600'-long segment of the LMRC passes through the **North Canal Historic District**, extending from the Merrimack River northerly to Canal Street/Water Street; a 1,500'-long segment of the LMRC abuts the **Arlington Mills Historic District**, extending from Manchester Street northerly to the Methuen City Line. Additionally, MassDOT has previously recommended **South Canal** (LAW.908), at the southerly limit of the project area, to be eligible for listing in the NRHP as a historic district. Staff at the Massachusetts Historical Commission (MHC) concurred with that recommendation. MassDOT Bridge L-04-045, the **Boston & Maine South Canal Railroad Bridge (LAW.927)**, a single-span steel deck plate girder superstructure supported on the canal walls constructed in 1907, would be a contributing property in the National Register-eligible South Canal Historic District.

The APE also includes MassDOT Bridge L-04-032, the **Manchester and Lawrence Railroad Bridge (LAW.923)** over the Merrimack River, built by the Boston & Maine Railroad in 1893. The bridge is comprised of a six-span, pin-connected Pratt deck truss superstructure supported on cut granite abutments and piers and is among the oldest of its type in Massachusetts. MHC staff determined the bridge to be eligible for listing in the NRHP in 1988 as part of the MBTA Survey. The bridge, which is currently out of service, will be retrofitted to accommodate the new shared use path.

Ten Park Plaza, Suite 4160, Boston, MA 02116
Tel: 857-368-4636, TTY: 857-368-0655
mass.gov/massdot

Maura Healey, Governor
Kimberley Driscoll, Lieutenant Governor
Monica Tibbits-Nutt, Acting Secretary & CEO
Jonathan L. Gulliver, Highway Administrator

MassDOT
Massachusetts Department of Transportation
Highway Division

November 7, 2023

Ms. Brona Simon
State Historic Preservation Officer
Massachusetts Historical Commission
220 Morrissey Boulevard
Boston, MA 02125

RE: Lawrence — Lawrence-Manchester Rail Corridor Rail Trail (MassDOT #608930)
Section 106 Review – No Adverse Effect
Section 4(f): Fee Taking and Permanent Easements – *de minimis* impact
Section 4(f): Temporary Occupancies – No 4(f) Use

Dear Ms. Simon:

The Massachusetts Department of Transportation (MassDOT) and the City of Lawrence propose to expend federal funds to construct a shared use path (SUP) and linear park along the former Manchester & Lawrence Railroad corridor. The SUP will extend for 1.5 miles from Merrimack Street north to the Methuen City Line, where the new shared use path will connect to the existing Methuen Rail Trail. The Lawrence Manchester Rail Corridor (LMRC) will cross the South Canal, the Merrimack River, and the North Canal on existing bridges. The corridor is currently owned by the Massachusetts Bay Transportation Authority (MBTA), except for a spur at the northerly end of the project corridor that is owned by the City.

The project's Area of Potential Effects (APE) includes several historic districts, buildings, and bridges that are either listed or eligible for listing in the National Register of Historic Places (NRHP), as described below. MassDOT has reviewed the project under the terms of the Massachusetts Statewide Programmatic Agreement for Section 106 of the National Historic Preservation Act of 1966, as amended [36 CFR Part 800.3(a)(2)], and has determined that the project will have No Adverse Effect on properties that are listed in or may be eligible for listing in the NRHP.

Area of Potential Effects

The project's APE includes two historic districts that are listed in the NHRP: a 600'-long segment of the LMRC passes through the North Canal Historic District, extending from the Merrimack River northerly to Canal Street/Water Street; a 1,500'-long segment of the LMRC abuts the Arlington Mills Historic District, extending from Manchester Street northerly to the Methuen City Line. Additionally, MassDOT has previously recommended South Canal (LAW.908), at the southerly limit of the project area, to be eligible for listing in the NRHP as a historic district. Staff at the Massachusetts Historical Commission (MHC) concurred with that recommendation. MassDOT Bridge L-04-045, the Boston & Maine South Canal Railroad Bridge (LAW.927), a single-span steel deck plate girder superstructure supported on the canal walls constructed in 1907, would be a contributing property in the National Register-eligible South Canal Historic District.

The APE also includes MassDOT Bridge L-04-032, the Manchester and Lawrence Railroad Bridge (LAW.923) over the Merrimack River, built by the Boston & Maine Railroad in 1893. The bridge is comprised of a six-span, pin-connected Pratt deck truss superstructure supported on cut granite abutments and piers and is among the oldest of its type in Massachusetts. MHC staff determined the bridge to be eligible for listing in the NRHP in 1988 as part of the MBTA Survey. The bridge, which is currently out of service, will be retrofitted to accommodate the new shared use path.

Ten Park Plaza, Suite 4160, Boston, MA 02116
Tel: 857-368-4636, TTY: 857-368-0655
mass.gov/massdot

Two mill buildings within the APE are included in the Inventory of Historic Assets of the Commonwealth: the Levi Sprague Shuttle Co. building (LAW.570) at 275 Lowell Street and the Stanley Manufacturing Company building (LAW.571) at the corner of West Street and Haverhill Street. Both buildings have been documented for the Historic American Engineering Record and have potential to be eligible for the NRHP. Neither building will be disturbed by this project.

Project Description

The proposed work will include construction of a 12'-wide paved shared use path and linear park along the former Manchester & Lawrence Railroad corridor. The path will typically remain within the existing MBTA or City right-of-way (ROW), with most of the proposed construction of the main SUP constrained to the existing railroad bed. A 10'-wide paved curvilinear path for pedestrian use and slower bicycle traffic will meander along the LMRC between Haverhill Street and Manchester Street within the existing MBTA ROW.

North of Manchester Street, a 900'-long connector path will diverge from the main LMRC to follow the alignment of a spur track that formerly extended into the Arlington Mills millyard within the boundaries of the NRHP-listed Arlington Mills Historic District. The parcel on which the spur track is situated is now owned by the City, but no contributing buildings or structures are located on or immediately adjacent to the City parcel. The spur path will curve to the northeast to connect to the existing Spicket River Greenway. A 180'-long connector path will extend off this spur path through disturbed areas of the City-owned parcel to provide access to Manchester Street Park. The spur path will be flanked by precast concrete step seating, as well as several standard picnic tables and benches.

All remaining steel rails and timber ties will be removed from the rail beds throughout the LMRC. Overgrown vegetation along the corridor will be cleared and grubbed, with particular attention to eradication of invasive species. Any mature trees present will be retained. As there is a history of dumping in the area since the rail corridor was abandoned, any trash and other hazardous objects/ detritus present within the corridor will also be removed. Timber rail fences and timber guardrail will be installed within the corridor as necessary, to maintain appropriate safety standards.

The LMRC will generally be improved to provide a park-like feeling, with trees, shrubs and other landscaping, ornamental pedestrian-level lighting, concrete accent pavers, weathering steel accent wall features, reclaimed granite block slopes, stacked timber seating features and other seats, tables and amenities added at appropriate areas along the corridor. Improvements to drainage and subsurface conditions for paving will require minor vertical and horizontal grading throughout the project corridor. Bio-retention basins and drainage swales will be constructed throughout the corridor adjacent to the new shared use path.

A connector path to Railroad Street will be created off the westerly side of the LMRC north of Haverhill Street, extending through an existing paved commercial parking lot, near Station 56+50. The City will take a permanent easement on that commercial parcel. Adjacent to Bourgoin Square Park, a paved apron will be constructed off the easterly side of the LMRC to facilitate a connector path to be built by the City in the future. Several rows of precast concrete step seating will be set into the slope between the LMRC and the westerly side of Bourgoin Square Park leading down to the playing fields.

National Register-listed North Canal Historic District

The LMRC passes through the NRHP-listed North Canal Historic District for approximately 600'. This segment of the SUP leaves the railroad ROW and follows the easterly sidewalk along Broadway, extending from the north bank of the Merrimack River to the northerly side of Canal Street/Water Street. The SUP follows Broadway, crossing the 1848 stone-lined North Canal (LAW.906) on the Gilbert Memorial Bridge (MassDOT Bridge L-04-006), and then across the Canal Street/Water Street intersection to rejoin the rail corridor. The SUP follows existing sidewalks within the North Canal Historic District and will involve relatively minor upgrades for ADA compliance, as well as traffic signal upgrades and pedestrian safety improvements at the Canal Street/Water Street/Broadway intersection. The Gilbert Memorial Bridge (LAW.998), constructed in 1939, is comprised of a single-span concrete-encased steel stringer superstructure supported on reinforced concrete abutments. The Gilbert Memorial Bridge is mistakenly identified on MACRIS as the Edward O'Leary Bridge, which actually crosses the Merrimack River immediately to the south. Work on the Gilbert Memorial Bridge will be limited to new pavement markings.

Contributing buildings within the historic district adjacent to the LMRC include: the Upper Pacific Mill #5 Storehouse (LAW.266), 11 Broadway, an 1860 five-story brick warehouse; the North Canal Gatekeeper's House (LAW.263), 6 Broadway, an 1845 Greek Revival style dwelling; the Upper Pacific Cotton Mill Weave Shed and Office (LAW.264), 468 Canal Street, an 1887 brick mill building along North Canal east of Broadway; and Upper Pacific Cotton Yarn Mill #5 Storehouse (LAW.272), 3 Broadway, a 1902 brick six-story warehouse. The proposed work within the North Canal Historic District will not result in any physical impacts to contributing properties within or adjacent to the project area.

Improvement or Replacement of Various Bridges

The NRHP-eligible Manchester & Lawrence Railroad Bridge over the Merrimack River and the Boston & Maine South Canal Railroad Bridge, which is a contributing property in the NRHP-eligible South Canal Historic District, will be reused to carry the shared-use path, with repairs completed as necessary. For the Boston & Maine South Canal Railroad Bridge, the existing timber sleepers that support the tracks will be removed and replaced with new precast concrete deck panels and asphalt wearing surface. A timber pedestrian railing will be installed, and new lighting will be installed at either end of the bridge. For the Manchester & Lawrence Railroad Bridge over the Merrimack River, the existing timber sleepers also will be removed and replaced with new precast concrete deck panels on new steel floorbeams. The northerly half of the bridge will be paved with an asphalt wearing surface and the southerly half with precast concrete pavers. Steel cable pedestrian railings will be installed along both sides of the superstructure. Stacked timber seating and lighting will be installed along the centerline of the bridge.

MassDOT Bridge L-04-027, which carries Lowell Street over the corridor, is comprised of a five-span timber stringer superstructure supported by timber bent piers and dry-laid granite masonry abutments. The bridge was constructed in 1927 and substantially reconstructed in 1987. Bridge L-04-027 will be replaced by a single-span precast concrete rigid frame arch with a stone formliner treatment on the spandrel walls. The granite material in the existing abutments will be reused onsite. An 8'-wide, 300'-long timber pedestrian ramp will be constructed south of the bridge, leading up to Lowell Street. Bridge L-04-027 is a late and undistinguished example of a common structural type and does not appear to be eligible for individual listing in the NRHP. The bridge is not located within any NRHP-listed or eligible historic district.

The superstructure of MassDOT Bridge L-04-030, the Boston & Maine Manchester Street Railroad Bridge (LAW.929), which carried the railroad over Manchester Street, was removed by the MBTA in 2016, though the stone masonry abutments remain in place. A new prefabricated steel through

girder superstructure with asphalt wearing surface on corrugated steel deck panels will be installed on the existing stone masonry abutments to carry the LMRC over Manchester Street.

Archaeological Assessment

A review of the MHC's archaeological maps in MACRIS revealed one recorded archaeological sites within the project's direct APE: 19-ES-182 (Village Site 1), located in the vicinity of the Broadway/Essex Street intersection. While the project area passes directly through the recorded site boundaries, it is unlikely that project work will remain within the disturbed footprint within the railroad corridor and the roadway corridor along Essex Street. There are numerous pre-Contact archaeological sites recorded along the Merrimack River to the west of the APE. The nearest recorded pre-Contact sites include: 19-ES-191 (Village Site 2), located approximately 0.2 mile to the southwest of the bridge; 19-ES-192 (Boutwell's Falls Site), located approximately 0.55 mile to the west. It is the opinion of the MassDOT Archaeologist that low sensitivity for intact, significant archaeological resources can be ascribed to the project's direct area of potential effect based on the impacts of past railroad, roadway, canal, utility, and drainage work and dense urban commercial and industrial development. The shared use path will be constructed on the former railbed and will not impact any resources associated with the canals.

Section 4(f) Evaluation: Fee Taking and Permanent Utility Easements – De minimis impact

One fee taking and several permanent utility easements (PUEs) are required from parcels occupied by contributing properties within the National Register-listed North Canal Historic District. The fee taking is highlighted in green on the enclosed ROW plan, and PUEs are highlighted in red. Any taking or easement that results in the permanent incorporation of land from a public or private historic site into a transportation facility (e.g., drainage structures, retaining walls, utilities) is regarded as a transportation use and must be evaluated and approved under Section 4(f) of the Department of Transportation Act of 1966, as amended [23 CFR Part 774].

A fee taking, labeled Parcel 3-C (337 square feet) is required from the Upper Pacific Cotton Yarn Mill #5 Storehouse (LAW.272) parcel at 3 Broadway. The proposed taking encompasses an area of existing sidewalk abutting the storehouse and will bring this area within the roadway layout.

PUE-1 (543 sf) is required from the Upper Pacific Cotton Mill Weave Shed and Office (LAW.264) parcel at 468 Canal Street. This easement encompasses a narrow strip of land along the roadway frontage and will allow for minor relocation and future maintenance of overhead utility wires.

PUE-4 (23 sf) is required from the North Canal (LAW.906) parcel adjacent to the Upper Pacific Weave Shed. This easement encompasses a small triangle of land near the canal and will allow for minor relocation and future maintenance of overhead utility wires.

PUE-5 (1,183 sf) is required from the Upper Pacific Storehouse #5 (LAW.266) parcel at 11 Broadway. This easement encompasses a narrow strip of land along the roadway frontage and will allow for minor relocation of an existing utility pole, as well as future maintenance of overhead utility wires.

PUE-3 (28 sf) is required from the North Canal Gatekeeper's House (LAW.263) parcel at 6 Broadway. This easement encompasses a small triangle of land near the house and will allow for minor relocation of an existing utility pole, as well as future maintenance of overhead utility wires.

It is MassDOT's expectation that the Federal Highway Administration (FHWA) will determine that the proposed takings required from these National Register-listed and -eligible properties meet the criteria for a Section 4(f) de minimis finding, pursuant to 23 CFR 774.3(b). This project, therefore, does not require an individual Section 4(f) evaluation. This letter is intended to inform the State Historic Preservation Officer (SHPO) that this project is expected to qualify for a de minimis finding under Section 4(f) based on the concurrence of your office with this Section 106 finding of No Adverse Effect, pursuant to 23 CFR 774.5(b)(1)(ii).

Section 4(f) Evaluation: Temporary Occupancies – No 4(f) use

This project also requires temporary occupancies, also known as temporary construction easements, on several parcels within the NRHP-listed North Canal Historic District. These temporary occupancies will allow various construction activities, including tree removal, slope grading, and other related work. The proposed temporary occupancies are highlighted in yellow on the enclosed plans.

It is MassDOT's opinion that the temporary occupancies on parcels within the NRHP-listed historic district will satisfy the five conditions required for a temporary occupancy not to constitute a "use" within the meaning of Section 4(f), pursuant to 23 CFR 774.13(d):

(1) Duration must be temporary, i.e., less than the time needed for construction of the project, and there should be no change in ownership of the land;

(2) Scope of the work must be minor, i.e., both the nature and the magnitude of the changes to the Section 4(f) property are minimal

(3) There are no anticipated permanent adverse physical impacts, nor will there be interference with the protected activities, features, or attributes of the property, on either a temporary or permanent basis;

(4) The land being used must be fully restored, i.e., the property must be returned to a condition which is at least as good as that which existed prior to the project; and

(5) There must be documented agreement of the official(s) with jurisdiction over the Section 4(f) resource regarding the above conditions.

The SHPO is the official with jurisdiction over a historic site for the purposes of Section 4(f), pursuant to 23 CFR 774.17. Your concurrence with this No Adverse Effect finding will signify that your office agrees with MassDOT's assessment that the proposed temporary occupancies do not constitute a "use" of NR-listed or -eligible historic properties under Section 4(f) and that the conditions listed above have been satisfied, pursuant to Condition 5.

Early Coordination and Effect Determination

The City's design consultant, TRC, solicited comments from the Lawrence Historical Commission (LHC) in a letter dated February 18, 2021, with a copy forwarded to the MHC. MassDOT did not receive a response to that letter from the LHC.

In the opinion of MassDOT, the proposed shared-use path construction and related roadway improvements, bridge improvements or replacements, and other related work along the former Manchester & Lawrence Railroad corridor in Lawrence will have No Adverse Effect on the NRHP-

listed North Canal Historic District, the NRHP-listed Arlington Mill Historic District, the NRHP-eligible South Canal Historic District, or the NRHP-eligible Manchester & Lawrence Railroad Bridge over the Merrimack River (LAW.929). The proposed work will not disturb or displace any features associated with the North Canal, the South Canal, or Arlington Mills, and any features that define the landscape will be protected.

MassDOT solicits your concurrence with our No Adverse Effect finding for the project in accordance with Stipulation V.C.1 of the amended Section 106 Programmatic Agreement. A copy of this letter has been forwarded to the Federal Highway Administration as specified under the terms of the Programmatic Agreement. If you should have any questions about this project, please contact me at 207-590-4999.

Sincerely,

Kurt Jergensen
Historic Bridge Specialist
Environmental Services

cc: Cassandra Ostrander, FHWA

Encl: Project plans, incl. ROW plans
Locus map
Bridge photos

FOR FHWA USE

MassDOT Request for Federal Highway Administration (FHWA) Approval

MassDOT Highway Division requests final approval from FHWA that the proposed "use" of the above-described Section 4(f) resources meets the criteria of a *de minimis* impact, as specified under 23 CFR 774.17.

KENNETH S MILLER Digitally signed by KENNETH S MILLER
Date: 2024.01.08 08:43:46 -05'00'

Joi Singh, Division Administrator (or designee) Date
Federal Highway Administration
Massachusetts Division

950 CMR: OFFICE OF THE SECRETARY OF THE COMMONWEALTH

APPENDIX A
MASSACHUSETTS HISTORICAL COMMISSION
220 MORRISSEY BOULEVARD
BOSTON, MASS. 02125
617-727-8470, FAX: 617-727-5128

PROJECT NOTIFICATION FORM

Project Name:	Lawrence Manchester Rail Corridor Rail Trail (MassDOT #608930)
Location /Address:	Former Manchester & Lawrence Railroad corridor
City/Town:	Lawrence
Project Proponent	
Name:	Massachusetts Department of Transportation
Address:	10 Park Plaza
City/Town/Zip/Telephone:	Boston, MA 02116 / T: 207-590-4999

Agency license or funding for the project (list all licenses, permits, approvals, grants or other entitlements being sought from state and federal agencies).

Agency Name	**Type of License or funding (specify)**
FHWA (lead agency)	Federal Aid funds
US Army Corps of Engineers	Section 404 permit

Project Description (narrative):

The Massachusetts Department of Transportation (MassDOT) and the City of Lawrence propose to expend federal funds to construct a shared use path (SUP) and linear park along the former Manchester & Lawrence Railroad corridor. The SUP will extend for 1.5 miles from Merrimack Street north to the Methuen City Line, where the new shared use path will connect to the existing Methuen Rail Trail. The Lawrence Manchester Rail Corridor (LMRC) will cross the South Canal, the Merrimack River, and the North Canal on existing bridges. The corridor is currently owned by the Massachusetts Bay Transportation Authority (MBTA), except for a spur at the northerly end of the project corridor that is owned by the City.

The proposed work will include construction of a 12'-wide paved shared use path and linear park along the former Manchester & Lawrence Railroad corridor. The path will typically remain within the existing MBTA or City right-of-way (ROW), with most of the proposed construction of the main SUP constrained to the existing railroad bed. A 10'-wide paved curvilinear path for pedestrian use and slower bicycle traffic will meander along the LMRC between Haverhill Street and Manchester Street within the existing MBTA ROW. North of Manchester Street, a 900’-long connector path will diverge from the main LMRC to follow the alignment of a spur track that formerly extended into the Arlington Mills millyard within the boundaries of the NRHP-listed Arlington Mills Historic District. The parcel on which the spur track is situated is now owned by the City, but no contributing buildings or structures are located on or immediately adjacent to the City parcel. The spur path will curve to the northeast to connect to the existing Spicket River Greenway. A 180’-long connector path will extend off this spur path through disturbed areas of the City-owned parcel to provide access to Manchester Street Park. The spur path will be flanked by precast concrete step seating, as well as several standard picnic tables and benches.

APPENDIX A (continued)

All remaining steel rails and timber ties will be removed from the rail beds throughout the LMRC. Overgrown vegetation along the corridor will be cleared and grubbed, with particular attention to eradication of invasive species. Any mature trees present will be retained. As there is a history of dumping in the area since the rail corridor was abandoned, any trash and other hazardous objects/ detritus present within the corridor will also be removed. Timber rail fences and timber guardrail will be installed within the corridor as necessary, to maintain appropriate safety standards.

The LMRC will generally be improved to provide a park-like feeling, with trees, shrubs and other landscaping, ornamental pedestrian-level lighting, concrete accent pavers, weathering steel accent wall features, reclaimed granite block slopes, stacked timber seating features and other seats, tables and amenities added at appropriate areas along the corridor. Improvements to drainage and subsurface conditions for paving will require minor vertical and horizontal grading throughout the project corridor. Bio-retention basins and drainage swales will be constructed throughout the corridor adjacent to the new shared use path.

A connector path to Railroad Street will be created off the westerly side of the LMRC north of Haverhill Street, extending through an existing paved commercial parking lot, near Station 56+50. The City will take a permanent easement on that commercial parcel. Adjacent to Bourgoin Square Park, a paved apron will be constructed off the easterly side of the LMRC to facilitate a connector path to be built by the City in the future. Several rows of precast concrete step seating will be set into the slope between the LMRC and the westerly side of Bourgoin Square Park leading down to the playing fields.

The Manchester & Lawrence Railroad Bridge over the Merrimack River and the Boston & Maine South Canal Railroad Bridge will be reused to carry the shared-use path, with repairs completed as necessary. For the Boston & Maine South Canal Railroad Bridge, the existing timber sleepers that support the tracks will be removed and replaced with new precast concrete deck panels and asphalt wearing surface. A timber pedestrian railing will be installed, and new lighting will be installed at either end of the bridge. For the Manchester & Lawrence Railroad Bridge over the Merrimack River, the existing timber sleepers also will be removed and replaced with new precast concrete deck panels on new steel floorbeams. The northerly half of the bridge will be paved with an asphalt wearing surface and the southerly half with precast concrete pavers. Steel cable pedestrian railings will be installed along both sides of the superstructure. Stacked timber seating and lighting will be installed along the centerline of the bridge.

MassDOT Bridge L-04-027, which carries Lowell Street over the corridor, is comprised of a five-span timber stringer superstructure supported by timber bent piers and dry-laid granite masonry abutments. The bridge was constructed in 1927 and substantially reconstructed in 1987. Bridge L-04-027 will be replaced by a single-span precast concrete rigid frame arch with a stone formliner treatment on the spandrel walls. The granite material in the existing abutments will be reused onsite. An 8’-wide, 300’-long timber pedestrian ramp will be constructed south of the bridge, leading up to Lowell Street. Bridge L-04-027 is a late and undistinguished example of a common structural type and does not appear to be eligible for individual listing in the NRHP. The bridge is not located within any NRHP-listed or eligible historic district.

The superstructure of MassDOT Bridge L-04-030, the Boston & Maine Manchester Street Railroad Bridge (LAW.929), which carried the railroad over Manchester Street, was removed by the MBTA in 2016, though the stone masonry abutments remain in place. A new prefabricated steel through girder superstructure with asphalt wearing surface on corrugated steel deck panels will be installed on the existing stone masonry abutments to carry the LMRC over Manchester Street.

APPENDIX A (continued)

Does the project include demolition? If so, specify nature of demolition and describe the building(s) which are proposed for demolition.

N/A

Does the project include rehabilitation of any existing buildings? If so, specify nature of rehabilitation and describe the building(s) which are proposed for rehabilitation

N/A

Does the project include new construction? If so, describe (attach plans and elevations if necessary).

A 12'-wide SUP will be constructed along existing railroad corridor, with replacement of Bridge L-04-027 on alignment with a precast concrete rigid frame arch structure, and the replacement of the now-removed Bridge L-04-030 with a steel through girder superstructure on existing stone masonry abutments.

To the best of your knowledge, are any historic or archaeological properties known to exist within the project's area of potential impact? If so, specify.

Review of the National Register of Historic Places revealed that the project's APE includes two historic districts that are listed in the NHRP: a 600'-long segment of the LMRC passes through the North Canal Historic District, extending from the Merrimack River northerly to Canal Street/Water Street; a 1,500'-long segment of the LMRC abuts the Arlington Mills Historic District, extending from Manchester Street northerly to the Methuen City Line.

The APE also includes MassDOT Bridge L-04-032, the Manchester and Lawrence Railroad Bridge (LAW.923) over the Merrimack River, built by the Boston & Maine Railroad in 1893. The bridge is comprised of a six-span, pin-connected Pratt deck truss superstructure supported on cut granite abutments and piers and is among the oldest of its type in Massachusetts. MHC staff determined the bridge to be eligible for listing in the NRHP in 1988 as part of the MBTA Historical Property Survey. Additionally, MassDOT has previously recommended South Canal (LAW.908), at the southerly limit of the project area, to be eligible for listing in the NRHP as a historic district. Staff at the Massachusetts Historical Commission (MHC) concurred with that recommendation. MassDOT Bridge L-04-045, the Boston & Maine South Canal Railroad Bridge (LAW.927), a single-span steel deck plate girder superstructure supported on the canal walls constructed in 1907, would be a contributing property in the National Register-eligible South Canal Historic District. Both of these bridges, which are currently out of service, will be retrofitted to carry the new shared use path.

Review of the Inventory of Historic and Archaeological Assets of the Commonwealth revealed that two mill buildings within the APE are included in the Inventory: the Levi Sprague Shuttle Co. building (LAW.570) at 275 Lowell Street and the Stanley Manufacturing Company building (LAW.571) at the corner of West Street and Haverhill Street. Both buildings have been documented for the Historic American Engineering Record and have potential to be eligible for the NRHP.

A review of the MHC's archaeological maps in MACRIS revealed one recorded archaeological sites within the project's direct APE: 19-ES-182 (Village Site 1), located in the vicinity of the Broadway/Essex Street intersection. While the project area passes directly through the recorded site boundaries, it is unlikely that project work will remain within the disturbed footprint within the railroad corridor and the roadway corridor along Essex Street. There are numerous pre-Contact archaeological sites recorded along the Merrimack River to the west of the APE. The nearest recorded pre-Contact sites include: 19-ES-191 (Village Site 2), located approximately 0.2 mile to the southwest of the bridge; 19-ES-192 (Boutwell's Falls Site), located approximately 0.55 mile to the west. It is the opinion of the MassDOT Archaeologist that low sensitivity for intact archaeological resources can be ascribed to the project's direct area of potential effect based on the impacts of past railroad, roadway, canal, utility, and drainage work and dense urban commercial and industrial development. The shared use path will be constructed on the former railbed and will not impact any resources associated with the canals.

950 CMR: OFFICE OF THE SECRETARY OF THE COMMONWEALTH

APPENDIX A (continued)

What is the total acreage of the project area?

Woodland		acres	Productive Resources:		
Wetland		acres	Agriculture		acres
Floodplain	<1	acres	Forestry		acres
Open Space	<2	acres	Mining/Extraction		acres
Developed	<2	acres	Total Project Acreage	<5	acres

What is the acreage of the proposed new construction? <5 acres

What is the present land use of the project area?

The Project area is situated amid densely-developed urban neighborhoods in Lawrence. The proposed shared use path will follow the abandoned Boston & Maine RR/ Manchester & Lawrence RR corridor, presently owned by the Massachusetts Bay Transportation Authority.

Please attach a copy of the section of the USGS quadrangle map which clearly marks the project location.

This Project Notification Form has been submitted to the MHC in compliance with 950 CMR 71.00.

Signature of person submitting this form: 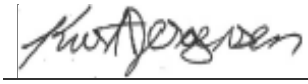 **Date:** 12/14/2023

Name: Kurt Jergensen

Address: 10 Park Plaza

City/Town/Zip: Boston, MA 02116

Telephone: 207-590-4999

REGULATORY AUTHORITY

950 CMR 71.00: M.G.L. c. 9, §§ 26-27C as amended by St. 1988, c. 254.

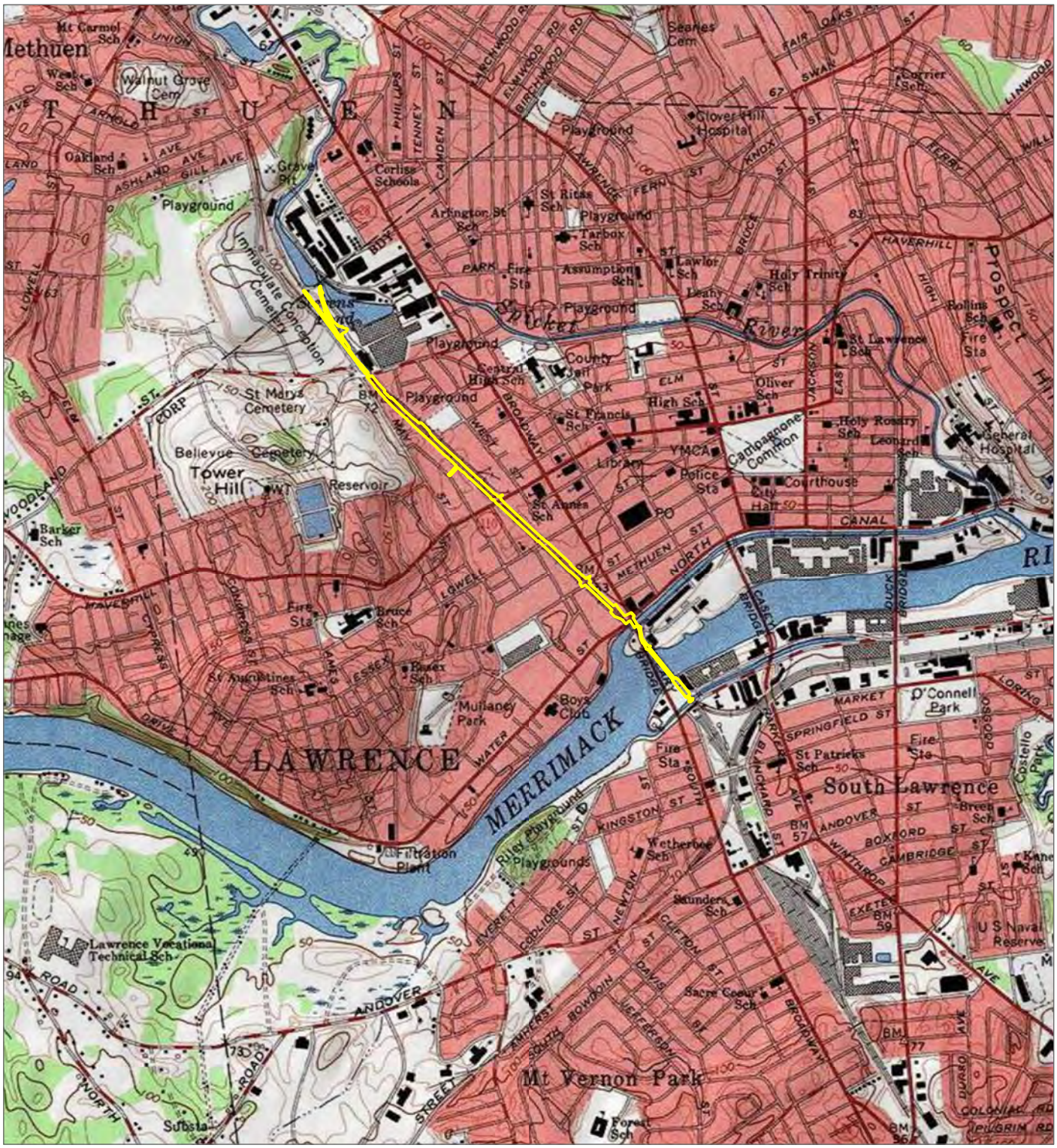

LIMIT OF DISTURBANCE

BASE MAP: USGS COLOR ORTHO IMAGERY
DATA SOURCES: TRC

N

0 500 1,000
FEET
1:23,538 1" = 1,962'

PROJECT:
LAWRENCE MANCHESTER RAIL CORRIDOR PROJECT
LAWRENCE, MA

TITLE:
PROJECT LOCATION

DRAWN BY:	A. YOUNG	PROJ. NO.:	000000
CHECKED BY:	K. MACK		
APPROVED BY:	K. MACK		**FIGURE 1**
DATE:	MARCH 2023		

TRC

P. O. BOX 1068
BATH, ME 04530

FILE: LRMC

COORDINATE SYSTEM: NAD 1983 STATEPLANE MASSACHUSETTS MAINLAND FIPS 2001 FEET: MAP ROTATION: 0
-- SAVED BY: AYOUNG ON 3/20/2023, 09:23:12 AM: FILE PATH: C:\USERS\AYOUNG\ONEDRIVE - TRC\DOCUMENTS\ARCGIS\PROJECTS\LRMC\LRMC.APRX: LAYOUT NAME: 8.5X11 P_INSET

Jergensen, Kurt E. (DOT)

From: Microsoft Outlook
To: Bettina Washington; tcrm2@wampanoagtribe-nsn.gov
Sent: Friday, December 15, 2023 4:26 PM
Subject: Relayed: Lawrence, Lawrence-Manchester Rail Corridor trail (MassDOT #608930; email 1 of 2)

Delivery to these recipients or groups is complete, but no delivery notification was sent by the destination server:

Bettina Washington (thpo@wampanoagtribe-nsn.gov)

tcrm2@wampanoagtribe-nsn.gov (tcrm2@wampanoagtribe-nsn.gov)

Subject: Lawrence, Lawrence-Manchester Rail Corridor trail (MassDOT #608930; email 1 of 2)

Lawrence, Lawrence-Manch...

Jergensen, Kurt E. (DOT)

From: Jergensen, Kurt E. (DOT)
Sent: Friday, December 15, 2023 4:26 PM
To: Bettina Washington
Cc: tcrm2@wampanoagtribe-nsn.gov; Harwood, Jameson (DOT)
Subject: Lawrence, Lawrence-Manchester Rail Corridor trail (MassDOT #608930; email 1 of 2)
Attachments: Lawrence-Manchester PNF.pdf; Locus map.pdf; 001_608930_75% Design Plans.pdf; 608930_75% Landscape Plans.pdf

Dear Ms. Washington,

MassDOT is submitting the enclosed information regarding the above-noted project to the Wampanoag Tribe of Gay Head (Aquinnah) to meet the Section 106 consultation requirements of the US Army Corps of Engineers. Due to file size, the submittal will be split between two emails. Please submit any written comments or concerns regarding historic or archaeological properties that may be affected by this project to Carrie Lavallee, P.E., Chief Engineer, Massachusetts Department of Transportation, 10 Park Plaza, Boston, MA 02116-3973, Attn: Jameson Harwood.

You also may send comments, questions, or requests for more information by email to Jameson.Harwood@state.ma.us.

Thank you very much.

Kurt Jergensen
Historic Bridge Specialist
Environmental Services
MassDOT, Highway Division
Ten Park Plaza, Boston, MA 02116
Cell: 207-590-4999

Jergensen, Kurt E. (DOT)

From: Microsoft Outlook
To: Bettina Washington; tcrm2@wampanoagtribe-nsn.gov
Sent: Friday, December 15, 2023 4:29 PM
Subject: Relayed: Lawrence, Lawrence-Manchester Rail Corridor trail (MassDOT #608930; email 2 of 2)

Delivery to these recipients or groups is complete, but no delivery notification was sent by the destination server:

Bettina Washington (thpo@wampanoagtribe-nsn.gov)

tcrm2@wampanoagtribe-nsn.gov (tcrm2@wampanoagtribe-nsn.gov)

Subject: Lawrence, Lawrence-Manchester Rail Corridor trail (MassDOT #608930; email 2 of 2)

Lawrence, Lawrence-Manch...

Jergensen, Kurt E. (DOT)

From: Jergensen, Kurt E. (DOT)
Sent: Friday, December 15, 2023 4:28 PM
To: Bettina Washington
Cc: tcrm2@wampanoagtribe-nsn.gov; Harwood, Jameson (DOT)
Subject: Lawrence, Lawrence-Manchester Rail Corridor trail (MassDOT #608930; email 2 of 2)
Attachments: 608930_75% Bridge Plans.pdf; 608930_75% Design Plans_Lowell Street Bridge.pdf

Dear Ms. Washington,

MassDOT is submitting the enclosed information regarding the above-noted project to the Wampanoag Tribe of Gay Head (Aquinnah) to meet the Section 106 consultation requirements of the US Army Corps of Engineers. Due to file size, the submittal will be split between two emails. Please submit any written comments or concerns regarding historic or archaeological properties that may be affected by this project to Carrie Lavallee, P.E., Chief Engineer, Massachusetts Department of Transportation, 10 Park Plaza, Boston, MA 02116-3973, Attn: Jameson Harwood.

You also may send comments, questions, or requests for more information by email to Jameson.Harwood@state.ma.us.

Thank you very much.

Kurt Jergensen
Historic Bridge Specialist
Environmental Services
MassDOT, Highway Division
Ten Park Plaza, Boston, MA 02116
Cell: 207-590-4999

Jergensen, Kurt E. (DOT)

From: Microsoft Outlook
To: David Weeden; 106Review@mwtribe-nsn.gov
Sent: Friday, December 15, 2023 4:30 PM
Subject: Relayed: Lawrence, Lawrence-Manchester Rail Corridor trail (MassDOT #608930; email 1 of 2)

Delivery to these recipients or groups is complete, but no delivery notification was sent by the destination server:

David Weeden (David.Weeden@mwtribe-nsn.gov)

106Review@mwtribe-nsn.gov (106Review@mwtribe-nsn.gov)

Subject: Lawrence, Lawrence-Manchester Rail Corridor trail (MassDOT #608930; email 1 of 2)

Lawrence, Lawrence-Manch...

Jergensen, Kurt E. (DOT)

From: Jergensen, Kurt E. (DOT)
Sent: Friday, December 15, 2023 4:29 PM
To: David Weeden
Cc: 106Review@mwtribe-nsn.gov; Harwood, Jameson (DOT)
Subject: Lawrence, Lawrence-Manchester Rail Corridor trail (MassDOT #608930; email 1 of 2)
Attachments: Lawrence-Manchester PNF.pdf; Locus map.pdf; 001_608930_75% Design Plans.pdf; 608930_75% Landscape Plans.pdf

Dear Mr. Weeden,

MassDOT is submitting the enclosed information regarding the above-noted project to the Mashpee Wampanoag Tribe to meet the Section 106 consultation requirements of the US Army Corps of Engineers. Due to file size, the submittal will be split between two emails. Please submit any written comments or concerns regarding historic or archaeological properties that may be affected by this project to Carrie Lavallee, P.E., Chief Engineer, Massachusetts Department of Transportation, 10 Park Plaza, Boston, MA 02116-3973, Attn: Jameson Harwood.

You also may send comments, questions, or requests for more information by email to Jameson.Harwood@state.ma.us.

Thank you very much.

Kurt Jergensen
Historic Bridge Specialist
Environmental Services
MassDOT, Highway Division
Ten Park Plaza, Boston, MA 02116
Cell: 207-590-4999

Jergensen, Kurt E. (DOT)

From: Microsoft Outlook
To: David Weeden; 106Review@mwtribe-nsn.gov
Sent: Friday, December 15, 2023 4:30 PM
Subject: Relayed: Lawrence, Lawrence-Manchester Rail Corridor trail (MassDOT #608930; email 2 of 2)

Delivery to these recipients or groups is complete, but no delivery notification was sent by the destination server:

David Weeden (David.Weeden@mwtribe-nsn.gov)

106Review@mwtribe-nsn.gov (106Review@mwtribe-nsn.gov)

Subject: Lawrence, Lawrence-Manchester Rail Corridor trail (MassDOT #608930; email 2 of 2)

Lawrence, Lawrence-Manch...

Jergensen, Kurt E. (DOT)

From: Jergensen, Kurt E. (DOT)
Sent: Friday, December 15, 2023 4:30 PM
To: David Weeden
Cc: 106Review@mwtribe-nsn.gov; Harwood, Jameson (DOT)
Subject: Lawrence, Lawrence-Manchester Rail Corridor trail (MassDOT #608930; email 2 of 2)
Attachments: 608930_75% Bridge Plans.pdf; 608930_75% Design Plans_Lowell Street Bridge.pdf

Dear Mr. Weeden,

MassDOT is submitting the enclosed information regarding the above-noted project to the Mashpee Wampanoag Tribe to meet the Section 106 consultation requirements of the US Army Corps of Engineers. Due to file size, the submittal will be split between two emails. Please submit any written comments or concerns regarding historic or archaeological properties that may be affected by this project to Carrie Lavallee, P.E., Chief Engineer, Massachusetts Department of Transportation, 10 Park Plaza, Boston, MA 02116-3973, Attn: Jameson Harwood.

You also may send comments, questions, or requests for more information by email to Jameson.Harwood@state.ma.us.

Thank you very much.

Kurt Jergensen
Historic Bridge Specialist
Environmental Services
MassDOT, Highway Division
Ten Park Plaza, Boston, MA 02116
Cell: 207-590-4999

Jergensen, Kurt E. (DOT)

From: Microsoft Outlook
To: Tashtesook@aol.com
Sent: Friday, December 15, 2023 4:32 PM
Subject: Relayed: Lawrence, Lawrence-Manchester Rail Corridor trail (MassDOT #608930; email 1 of 2)

Delivery to these recipients or groups is complete, but no delivery notification was sent by the destination server:

Tashtesook@aol.com (tashtesook@aol.com)

Subject: Lawrence, Lawrence-Manchester Rail Corridor trail (MassDOT #608930; email 1 of 2)

Lawrence, Lawrence-Manch...

Jergensen, Kurt E. (DOT)

From: Jergensen, Kurt E. (DOT)
Sent: Friday, December 15, 2023 4:31 PM
To: Tashtesook@aol.com
Cc: Harwood, Jameson (DOT)
Subject: Lawrence, Lawrence-Manchester Rail Corridor trail (MassDOT #608930; email 1 of 2)
Attachments: Lawrence-Manchester PNF.pdf; Locus map.pdf; 001_608930_75% Design Plans.pdf; 608930_75% Landscape Plans.pdf

Dear Mr. Brown,

MassDOT is submitting the enclosed information regarding the above-noted project to the Narragansett Indian Tribe to meet the Section 106 consultation requirements of the US Army Corps of Engineers. Due to file size, the submittal will be split between two emails. Please submit any written comments or concerns regarding historic or archaeological properties that may be affected by this project to Carrie Lavallee, P.E., Chief Engineer, Massachusetts Department of Transportation, 10 Park Plaza, Boston, MA 02116-3973, Attn: Jameson Harwood.

You also may send comments, questions, or requests for more information by email to Jameson.Harwood@state.ma.us.

Thank you very much.

Kurt Jergensen
Historic Bridge Specialist
Environmental Services
MassDOT, Highway Division
Ten Park Plaza, Boston, MA 02116
Cell: 207-590-4999

Jergensen, Kurt E. (DOT)

From: Microsoft Outlook
To: Tashtesook@aol.com
Sent: Friday, December 15, 2023 4:32 PM
Subject: Relayed: Lawrence, Lawrence-Manchester Rail Corridor trail (MassDOT #608930; email 2 of 2)

Delivery to these recipients or groups is complete, but no delivery notification was sent by the destination server:

Tashtesook@aol.com (tashtesook@aol.com)

Subject: Lawrence, Lawrence-Manchester Rail Corridor trail (MassDOT #608930; email 2 of 2)

Lawrence, Lawrence-Manch...

Jergensen, Kurt E. (DOT)

From: Jergensen, Kurt E. (DOT)
Sent: Friday, December 15, 2023 4:32 PM
To: Tashtesook@aol.com
Cc: Harwood, Jameson (DOT)
Subject: Lawrence, Lawrence-Manchester Rail Corridor trail (MassDOT #608930; email 2 of 2)
Attachments: 608930_75% Bridge Plans.pdf; 608930_75% Design Plans_Lowell Street Bridge.pdf

Dear Mr. Brown,

MassDOT is submitting the enclosed information regarding the above-noted project to Narragansett Indian Tribe to meet the Section 106 consultation requirements of the US Army Corps of Engineers. Due to file size, the submittal will be split between two emails. Please submit any written comments or concerns regarding historic or archaeological properties that may be affected by this project to Carrie Lavallee, P.E., Chief Engineer, Massachusetts Department of Transportation, 10 Park Plaza, Boston, MA 02116-3973, Attn: Jameson Harwood.

You also may send comments, questions, or requests for more information by email to Jameson.Harwood@state.ma.us.

Thank you very much.

Kurt Jergensen
Historic Bridge Specialist
Environmental Services
MassDOT, Highway Division
Ten Park Plaza, Boston, MA 02116
Cell: 207-590-4999

Jergensen, Kurt E. (DOT)

From: Microsoft Outlook
To: Robinson, David S (EEA)
Sent: Friday, December 15, 2023 4:34 PM
Subject: Delivered: Lawrence, Lawrence-Manchester Rail Corridor trail (MassDOT #608930; email 1 of 2)

Your message has been delivered to the following recipients:

Robinson, David S (EEA) (David.S.Robinson@mass.gov)

Subject: Lawrence, Lawrence-Manchester Rail Corridor trail (MassDOT #608930; email 1 of 2)

Lawrence, Lawrence-Manch...

Jergensen, Kurt E. (DOT)

From: Jergensen, Kurt E. (DOT)
Sent: Friday, December 15, 2023 4:33 PM
To: Robinson, David S (EEA)
Cc: Harwood, Jameson (DOT)
Subject: Lawrence, Lawrence-Manchester Rail Corridor trail (MassDOT #608930; email 1 of 2)
Attachments: Lawrence-Manchester PNF.pdf; Locus map.pdf; 001_608930_75% Design Plans.pdf; 608930_75% Landscape Plans.pdf

Dear Mr. Robinson,

MassDOT is submitting the enclosed information regarding the above-noted project to Board of Underwater Archaeological Resources to meet the Section 106 consultation requirements of the US Army Corps of Engineers. Due to file size, the submittal will be split between two emails. Please submit any written comments or concerns regarding historic or archaeological properties that may be affected by this project to Carrie Lavallee, P.E., Chief Engineer, Massachusetts Department of Transportation, 10 Park Plaza, Boston, MA 02116-3973, Attn: Jameson Harwood.

You also may send comments, questions, or requests for more information by email to Jameson.Harwood@state.ma.us.

Thank you very much.

Kurt Jergensen
Historic Bridge Specialist
Environmental Services
MassDOT, Highway Division
Ten Park Plaza, Boston, MA 02116
Cell: 207-590-4999

Jergensen, Kurt E. (DOT)

From: Microsoft Outlook
To: Robinson, David S (EEA)
Sent: Friday, December 15, 2023 4:35 PM
Subject: Delivered: Lawrence, Lawrence-Manchester Rail Corridor trail (MassDOT #608930; email 2 of 2)

Your message has been delivered to the following recipients:

Robinson, David S (EEA) (David.S.Robinson@mass.gov)

Subject: Lawrence, Lawrence-Manchester Rail Corridor trail (MassDOT #608930; email 2 of 2)

Lawrence, Lawrence-Manch...

Jergensen, Kurt E. (DOT)

From: Jergensen, Kurt E. (DOT)
Sent: Friday, December 15, 2023 4:34 PM
To: Robinson, David S (EEA)
Cc: Harwood, Jameson (DOT)
Subject: Lawrence, Lawrence-Manchester Rail Corridor trail (MassDOT #608930; email 2 of 2)
Attachments: 608930_75% Bridge Plans.pdf; 608930_75% Design Plans_Lowell Street Bridge.pdf

Dear Mr. Robinson,

MassDOT is submitting the enclosed information regarding the above-noted project to the Board of Underwater Archaeological Resources to meet the Section 106 consultation requirements of the US Army Corps of Engineers. Due to file size, the submittal will be split between two emails. Please submit any written comments or concerns regarding historic or archaeological properties that may be affected by this project to Carrie Lavallee, P.E., Chief Engineer, Massachusetts Department of Transportation, 10 Park Plaza, Boston, MA 02116-3973, Attn: Jameson Harwood.

You also may send comments, questions, or requests for more information by email to Jameson.Harwood@state.ma.us.

Thank you very much.

Kurt Jergensen
Historic Bridge Specialist
Environmental Services
MassDOT, Highway Division
Ten Park Plaza, Boston, MA 02116
Cell: 207-590-4999

DOCUMENT A00880

GEOTECHNICAL REPORTS

THIS PAGE INTENTIONALLY LEEFT BLANK

GEOTECHNICAL DESIGN REPORT

MassDOT Highway Division
Lowell Street Bridge
Bridge No. L-04-027 (C90)
Lawrence, Massachusetts

Prepared for:
TEC, The Engineering Corporation
282 Merrimack Street
Second Floor
Lawrence, Massachusetts 01843

Prepared by:
TRC Environmental Corporation
249 Western Avenue
Augusta, Maine 04330

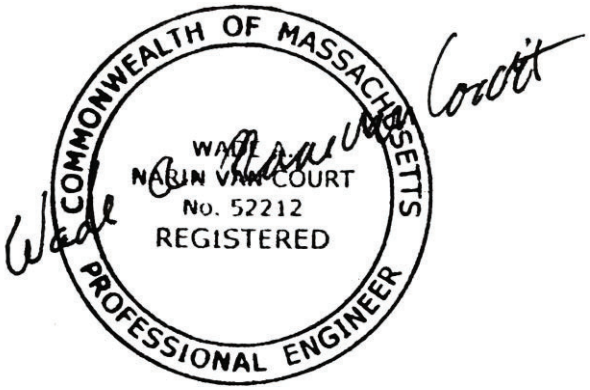

TRC Project Number 297487

September 2020
Revision 6: January 2023

Wade A. Narin Van Court, PhD, PE*
Senior Geotechnical Engineer
* Massachusetts PE# 52212

Alex Javes, PE*
Senior Geotechnical Engineer
* Wisconsin

Table of Contents

Executive Summary iii
1 INTRODUCTION 1
1.1 Background 1
1.2 Project Description 1
1.2.1 Existing Bridge 2
1.2.2 Proposed Construction 2
2 SUBSURFACE EXPLORATION PROGRAM 2
2.1 TRC Soil Borings 2
2.2 Historic Test Borings 3
3 SITE CONDITIONS 4
3.1 Regional Geology 4
3.2 Subsurface Conditions 4
3.2.1 Fill Layer 4
3.2.2 Glacial Till 4
3.2.3 Bedrock 5
3.2.4 Soil and Rock Testing 5
3.3 Groundwater 5
4 Foundations Recommendations 6
4.1 Bridge Foundations 6
4.1.1 Bearing Resistance and Settlement 7
4.1.2 Abutment Settlement 8
4.1.3 Overturning and Sliding 8
4.2 Seismic Design Parameters 9
4.2.1 Liquification Potential 10
5 Construction Recommendations 12
5.1 Earthwork 12
5.2 Temporary Excavation Support 13
5.3 Groundwater Management and Considerations 13
5.4 Surface Drainage 13
6 GENERAL COMMENTS/LIMITATIONS 14

FIGURES

Figures 1: Site Location Map

Figures 2: Boring Location Map

Figures 3: Subsurface Profile

APPENDICES

Appendix A Definition of Terms

Appendix B Boring Logs

Appendix C Soil Laboratory Test Results

Appendix D Geotechnical Analysis Calculations

Executive Summary

Geosearch, Inc. of Fitchburg, Massachusetts advanced two test borings (TRC-BB-1 and TRC-BB-2), each to the approximate depth of 30 feet, in the roadway embankment at the Site between October 9 and October 11, 2018. Bedrock was not encountered within the drilled depths of 30 feet below ground surface (ft bgs), therefore the driller was remobilized and the borings were re-drilled for extended depths of 114 and 97 feet, respectively, between January 14 and 17, 2019 to obtain additional soil samples and bedrock cores. Additionally, the two historic borings (BB-1 and BB-2) which were drilled by New Hampshire Boring Inc (MassDOT borings) between May 30 and June 07, 2012, were utilized in this report.

Under the pavement layers, the TRC borings (TRC-BB-1 and TRC-BB-2) initially encountered 14 to feet of fill underlain by 73 to 84 feet of glacial till, followed by bedrock at the approximate depths of 101 and 87 feet, respectively. These depths to bedrock correspond approximately to elevations -33 to -19 feet, respectively. Bedrock consisted of generally moderately hard to hard, slightly to moderately fractured, grey to dark grey quartzite and metasiltstone (referred to as schist), indicative of the Berwick Formation.

Groundwater was encountered during drilling of the TRC borings at approximately 18 to 20 feet below ground surface (bgs) and in the MassDOT borings at approximately 5 to 6.5 feet. TRC recommends assuming the groundwater table is at or near the ground surface of the former railroad bed, which corresponds to an elevation of approximately 52 feet.

Foundations for support of the proposed replacement bridge and wing wall footings can be designed as shallow foundations bearing on natural undisturbed granular soils (i.e., glacial till) or on compacted structural fill placed over the natural undisturbed granular soils after over-excavation and replacement of any unsuitable materials.

Based on TRC's limited subsurface exploration program, soil properties and strength parameters provided in **Table ES-1**, below, were used for geotechnical analyses.

Table ES-1: Design Soil Properties

Property	Existing Fill	Proposed Structural Fill	Glacial Till
Dry Unit Weight (pcf)	100	120	130
Moist Unit Weight (pcf)	120	125	135
Saturated Unit Weight (pcf)	125	130	140
Friction Angle (ϕ, degrees)	30	32	36
Cohesion (psf)	0	0	0

Notes:

1. pcf – pounds per cubic foot, psf – pounds per square foot
2. Friction Angles conservatively estimated from SPT blow counts.

TRC performed the engineering analyses using Load and Resistance Factor Design (LRFD) for evaluating the recommended factored bearing resistance (Strength Limit State) and the estimated foundation settlement based on the Service Limit State analysis for the proposed bridge and wing wall spread footings. These calculations are attached in **Appendix D**.

These analyses were based on foundation type and information that were provided to us by The Engineering Corporation (TEC): continuous spread footing (i.e., 52-foot-long and 10-foot-wide), with an estimated foundation bearing elevation of 45.0 feet on a minimum of 12-inches of crush gravel.

TRC performed the geotechnical engineering analyses in general accordance with the Load and Resistance Factor Design (LRFD) methodology described in the AASHTO LRFD Specifications (AASHTO, 2020[1]) (LRFD-BDS) and the AASHTO LRFD Seismic Bridge Design (AASHTO, 2011[2]) (LRFD-Seismic) for evaluating the recommended factored bearing resistance (Strength Limit State) and the estimated foundation settlement based on the Service Limit State analysis for the proposed spread footings to support the abutments and wing walls. A bearing resistance factor (ϕ_b) of 0.45 was used for the strength limit state analyses and calculated settlements for the service limit state analyses based on a resistance factor, ϕ_b of 1. The calculated bearing resistances are summarized in **Table ES-2**, below.

Table ES-2: Summary of Bearing Resistances

Strength Limit State	Factored Bearing Resistance (ksf) (LRFD-BDS Eq. 10.6.3.1.1-1)	
Spread Footings for Abutments and Wing Walls	$q_R = q_n * \phi_b =$	19.0

Based on the soils being cohesionless, immediate (i.e., elastic) settlement analyses were performed for the footings.

This report is subject to the limitations provided in **Section 6**, and the Terms and Conditions of our agreement.

[1] AASHTO. 2020. *LRFD Bridge Design Specifications*, 9th Edition, 2020, American Association of State Highway and Transportation Officials.

[2] AASHTO. 2011. *AASHTO Guide Specifications for LRFD Seismic Bridge Design*, 2nd Edition, with interim revisions through 2022, American Association of State Highway and Transportation Officials.

1 INTRODUCTION

This report presents the results of TRC Environmental Corporation's (TRC's) geotechnical investigation and study for the proposed replacement of the Lowell Street Bridge (Massachusetts Department of Transportation Highway Division [MassDOT] Bridge No. L-04-027 [C90]) in Lawrence, Massachusetts (the Site), which is planned as part of the Lawrence-Manchester Rail Corridor (LMRC) Rail Trail. The proposed bridge alignment is approximately from southwest to northeast. The Site Location Map is provided as **Figure 1**.

The objectives of the geotechnical subsurface exploration program were to characterize the subsurface conditions at the Site, and to provide recommendations for design and construction activities including site preparation, earthwork, foundations, and soil improvement, as necessary. To achieve these objectives, TRC undertook the subsurface exploration program and prepared this geotechnical report in general accordance with the MassDOT Load and Resistance Factor Design (LRFD) Bridge Manual (Part I Section 1.2 and Section 2.5, respectively). TRC performed geotechnical analyses in general accordance with the American Association of State Highway and Transportation Officials (AASHTO) LRFD Bridge Design Specifications, 9th Edition, 2020 (LRFD-BDS).

This report is subject to the Limitations provided in **Section 6**, and the Terms and Conditions of our agreement.

1.1 Background

Our understanding of the project is based on the following:

- Correspondence with The Engineering Corporation (TEC);
- Conceptual plans provided by TEC for the proposed bridge
- Previous subsurface exploration program performed by MassDOT; and,
- Site visits and geotechnical investigations by TRC.
- Historic borings that were drilled by New Hampshire Boring Inc, between May 30 and June 7, 2012 (Borings BB-1 and BB-2 within the Eastern and Western Abutments, respectively).

1.2 Project Description

The proposed Lowell Street Bridge is planned to replace the existing bridge, extending to the southwest from the western side of the Eastern Packaging building over the abandoned B&MRR right-of-way. The proposed Lowell Street Bridge is a three-sided (arch type) structure to convey two-lane traffic over the abandoned alignment of the Boston & Maine Railroad (B&MRR) with a 36-foot-span (37 feet center-to-center of abutment walls). The abandoned rail line consisted of two lines (i.e., set of train tracks), which appear to have been removed.

1.2.1 Existing Bridge

Based on a review of the information provided by TEC and publicly available information, the existing bridge at the Site is a timber stringer design, wooden bridge structure. The total span is approximately 37 feet and the longest span is 18 feet. The deck width is approximately 33.5 feet with two travel lanes (one in either direction) with wooden plank sidewalks on the outside of each travel lane. The bridge was built in 1927 and rehabilitated in 1987.

The elevation of the bridge and existing roadway is at approximately Elevation 69 feet. The ground surface of the railroad alignment ranges between approximately Elevation 51.5 feet and Elevation 52.0 feet. Elevations cited in this report are referenced to the North American Vertical Datum of 1988 (NAVD 1988).

1.2.2 Proposed Construction

The proposed construction includes replacing the existing bridge in its entirety with a new, single-span bridge. This proposed structure will be a 37-foot single span precast bridge with a potential hinge for twin-leaf design. The bridge will be founded on 40-foot long and 10-foot wide precast concrete spread footings at an approximate Elevation of 45 feet and cast-in-place concrete wing walls will be constructed at the same elevation in front of the existing stone abutments. TRC was informed by TEC that the Service I Load on the footings will be 3.8 kips per square foot (ksf) and the Strength I Load on the footings will be 4.98 ksf.

2 SUBSURFACE EXPLORATION PROGRAM

2.1 TRC Soil Borings

TRC's subsurface exploration program consisted of two soil borings (TRC-BB-1 and TRC-BB-2) as close as possible to the Eastern and Western Abutments, respectively. The borings were initially drilled for a depth of 30 feet, each, between October 9 and 11, 2018. The borings did not extend deep to reach bedrock and the client requested to extend the boring depths to reach bedrock and obtain representative rock core samples. Accordingly, Borings TRC-BB-1 and TRC-BB-2 were re-drilled for the extended depths of 114 and 97 feet, respectively, between January 14 and 17, 2019. The boring locations were established by TRC and the Site was cleared for underground utilities by Dig Safe. Locations of the TRC borings are shown on **Figure 2**. The subsurface profile for the site is shown in **Figure 3**.

Drilling services were provided by GeoSearch, Inc. of Sterling, Massachusetts under contract to TRC. Borings were advanced with a truck-mounted drill rig (CME-55) using hollow-stem auger drilling techniques to approximately 30 feet bgs and 3-inch diameter steel casing with drive and wash techniques to bedrock. Ten (10) feet of NQ-2-sized rock cores were collected at each boring for total depths of 114 and 97 feet bgs in borings TRC-

BB-1 and TRC-BB-2, respectively. The borings were observed and logged by a TRC representative.

Standard Penetration Testing (SPT) split spoon sampling was typically performed five-foot intervals thereafter in general accordance with the Standard Penetration Tests (SPT) procedure described in American Society of Testing and Materials (ASTM) Standard D1586. This sampling procedure involves driving a standard, 2-inch outer diameter (OD) split-barrel sampling spoon (i.e., split-spoon) over a two-foot interval using a 140-pound weight falling 30 inches and the N-value for each "field" SPT was recorded[3]. An automatic hammer was used to drive the split spoon samplers.

Soil samples collected with the split-spoon sampler were visually examined by TRC and classified in general accordance with the MassDOT soil classification procedure. Soil descriptions, blow counts, changes in stratigraphy, split-spoon penetration, sample recovery, observations of soil moisture content, and approximate depth to groundwater were used to develop the boring logs. Changes in stratigraphy were identified based on changes in drilling rates and/or other observations noted during drilling.

Rock core samples were visually examined by TRC and classified in general accordance with the MassDOT procedures. Rock descriptions, core drilling rates, core recovery, and Rock Quality Designation (RQD) were used to develop the boring logs.

Definitions for the terms used to describe the soils are provided in **Appendix A** and logs for the borings are provided in **Appendix B**.

2.2 Historic Test Borings

Previously, New Hampshire Boring Inc. advanced two borings (BB-1 and BB-2) at the Site between May 30 and June 7, 2012 on both sides of the existing bridge, just north of the easter abutment and just south of the Western Abutment, respectively. The borings were advanced using a CME-750 drill rig. In these borings, SPT's were performed with an automatic hammer generally at 5-foot sampling intervals. Ten feet of NX-sized rock cores (2.15-inch diameter) were collected at each boring for total depths ranging between 70 and 83 feet bgs. Logs for the Mass DOT borings are provided in **Appendix B**.

[3] N value is the number of blows required to drive the SPT spilt spoon sampler one foot into the soil after seating it 0.5 feet into the soil. Note, the boring logs show the blow counts require to drive the SPT spilt spoon sampler for each 6-inch interval and the N-value is the sum of the blows for the second and third 6-ich intervals.

3 SITE CONDITIONS

3.1 Regional Geology

According to available geological data, the Site is generally underlain by Silurian to Ordovician rock of the Berwick Formation in the Merrimack Group. According to Castle et al.[4] the bedrock is described as:

> *Light-gray to purplish-gray beds from inches to several feet thick of calcareous metasiltstone, biotite-feldspar-quartz granofels, impure quartzite and metasiltstone interbedded with lesser amounts of thin-bedded dark-gray micaceous phyllite, schist and impure quartzite.*

Overburden soils appear to be glacial deposits (i.e., glacial till) including glacial kame terrace deposits and glacial ground moraine deposits.[5] The glacial kame terrace deposits primarily consist of sands and fine gravel with cobbles and boulders. The glacial ground moraine deposits consist of till with minor amounts of sand and gravel

3.2 Subsurface Conditions

Subsurface conditions generally consist of 14 to 17 feet of fill over natural soils (glacial till) overlying bedrock. Detailed description of the encountered formations are provided in the next subsections.

3.2.1 Fill Layer

Fill was encountered at ground surface to a depth of 14 and 17 feet in TRC-BB-1 and TRC-BB-2, respectively. Both borings encountered approximately one foot of asphalt pavement at ground surface. The fill below the asphalt typical consisted of loose to dense, fine to coarse sand with various amounts of gravel and silt and occasional cobbles. N-Values ranged from 2 to 60 blows per foot (bl/ft). The normalized N-values ($N_{1,60}$)[6] were in the range of 3 to 84 bl/ft.

3.2.2 Glacial Till

Below the fill at TRC-BB-1 and TRC-BB-2 and at ground surface at MassDOT borings (Borings BB-1 and BB-2), native soil consisted of glacial till. The top of boring elevations for the MassDOT borings were 16.2 to 16.5 feet below those for the TRC borings. The till typically consisted of various amounts fine to coarse sand, silt and gravel and was wet and very dense. The thickness of this layer ranged between 70 and 84 feet. N-Values were

[4] Castle, R.O, Hepburn, J.C., and Kopera, J.P., Bedrock geologic map of the Lawrence quadrangle, Massachusetts, v 1.0, Massachusetts Geologic Survey (4th), (in review, April 2005).

[5] Castle, R.O. 1958. Surficial geology of the Lawrence quadrangle, Massachusetts-New Hampshire: U.S. Geological Survey Geologic Quadrangle Map GQ–107, scale 1:31,680 https://pubs.er.usgs.gov/publication/.

[6] The $N_{1,60}$ values are determined by normalizing the N values recorded in the field to standard hammer type, rod length, and overburden stress, which is done to improve the correlations with soil properties.

typically in the range of 50 to over 100 bl/ft or encountered early refusal. The $N_{1,60}$ values were in the range of 50 to over 150 bl/ft.

3.2.3 Bedrock

Underlying the glacial till was bedrock consisting of generally moderately hard to hard, slightly to moderately fractured, grey to dark grey quartzite and metasiltstone (commonly referred to as schist), with thin to medium bedding, and shallow to moderately dipping joints, some fine grained thin horizontally bedded quartzite, which is indicative of the Berwick Formation.

Table 1, below, depicts the rock recovery percentages that were observed along with the Rock Quality Designation[7] (RQD) for each core run.

Table 1: Summary of Bedrock Cores

Boring Number	Core Run	Core Depth (ft)	Recovery (%)	RQD (%)
TRC-BB-1	RC-1	104-109	100	52
	RC-2	109-114	100	75
TRC-BB-2	RC-1	87-92	75	45
	RC-2	92-97	98	48
MassDOT BB-1	C-1	84-89	100	- -*
	C-2	89-94	100	- -
MassDOT BB-2	C-1	70.5-75.5	70	- -
	C-2	75.5-78.5	100	- -

** RQD values not reported on the 2012 historic logs.*

3.2.4 Soil and Rock Testing

Soil and rock samples collected from the recent TRC borings were tested to determine soil properties (e.g., moisture content, grain size analysis, pH, Chlorides, Sulfates and uniaxial compression of rock core samples). The tests were performed by the GeoTesting Express soils testing laboratory in Boston, Massachusetts (GTX). Laboratory testing results are presented in **Appendix C**.

3.3 Groundwater

Groundwater was encountered at each boring and measured at the time of drilling. Groundwater elevations ranged between El 48 and El 50. Groundwater levels were measured at the time of drilling and may not reflect stabilized ground water conditions. It should be noted groundwater levels can fluctuate due to seasonal and annual changes based on variations in rainfall, runoff, evaporation, dewatering and other activities.

[7] Rock Quality Designation (RQD) is a measure of fracturing of the rock. It is calculated by dividing the total sum of rock pieces greater than 4 inches in length by the total length of the rock core run. It is expressed as a percentage.

4 Foundations Recommendations

Based on the limited soil sample testing performed as part of the subsurface exploration program, soil properties and strength parameters provided in **Table 2**, below, were used for the geotechnical evaluations and foundation analyses.

Table 2: Design Soil Properties

Property	Existing Fill	Proposed Structural Fill	Glacial Till
Dry Unit Weight (pcf)	100	120	130
Moist Unit Weight (pcf)	120	125	135
Saturated Unit Weight (pcf)	125	130	140
Friction Angle (ϕ, degrees)	30	32	36
Cohesion (pcf)	0	0	0

Notes:

1. pcf – pounds per cubic foot
2. Friction Angles conservatively estimated from SPT blow counts.

4.1 Bridge Foundations

The bridge designer (TEC) provided bridge loads and drawings for the replacement bridge, which included the type of foundation to be used. Specifically, foundations for support of the proposed replacement bridge and wing wall footings are expected to be shallow foundations bearing on natural undisturbed granular soils (i.e., glacial till) or on compacted backfill placed over the natural undisturbed granular soils after over-excavation and replacement of any fill and organic soils. TRC calculated the anticipated foundation loads on the abutments considering the anticipated bridge geometry and a traffic surcharge of 250 psf. The final design for bridge abutments shall be based on the recommended factored bearing resistance and estimated foundation settlements that were evaluated based on the engineering analyses by TRC.

Based on the information provided by TEC, the foundations being considered for the bridge are 10 feet wide precast concrete spread footings under each abutment. Foundations to support the planned wing walls for the abutments are expected to be designed as cast-in-place concrete spread footings. For the proposed bridge type (arch structure), the foundations will be subjected to normal loads and pressures and the lateral loads and eccentricity are of no concern.

Shallow foundations should bear a minimum of 12-inch of crushed stone placed on natural undisturbed granular soils (i.e., glacial till). A geotextile separation layer should be placed on the glacial till surface prior to placing the crushed stone. If fill, soft or other deleterious materials are encountered at footing elevation these materials should be overexcavated a minimum of two feet and replaced with compacted structural fill. The backfill should

consist of compacted Gravel Borrow (MassDOT M1.03.0, Type a, Gravel Borrow), as described in **Section 5.1**. Fill soils, if identified during construction, should be removed from within the bearing influence zone of the footings prior to construction. The bearing influence zone is defined by a one-horizontal to one-vertical (1H:1V) line sloping down from one foot outside of the bottom edge of footings to undisturbed natural granular soils.

4.1.1 Bearing Resistance and Settlement

In general accordance with the LRFD-BDS, TRC performed bearing resistance and settlement analyses (i.e., strength limit state and service limit state analyses, respectively) to calculate the factored bearing resistances for the proposed bridge and wing wall spread footings. These calculations are attached in **Appendix D**.

These analyses were performed considering the foundation's types and sizes that were provided to us by TEC: continuous spread footing (i.e., 52-foot-long, 10-foot-wide) with an estimated foundation bearing elevation of Elevation 45 feet on a minimum of 12-inches of crush gravel, for each abutment. In accordance with the LRFD-BDS, TRC a resistance factor, ϕ_b of 0.45 for the Strength Limit State (bearing resistance) analysis and settlements were calculated based on the estimated Service Limit State load, which is based on a resistance factor, ϕ_b of 1.0. The calculated factored bearing resistances are as follow:

Table 3: Summary of Bearing Resistances

Strength Limit State	Factored Bearing Resistance (ksf) (LRFD-BDS Eq. 10.6.3.1.1-1)	
Spread Footings for Abutments and Wing Walls	$q_R = q_n * \phi_b =$	19.0

The NCHRP report No. 107 "Shallow Foundations for Highway Structures", dated 1983, as and the FHWA report (FHWA-RC/TD-10-001, "Selection of Spread Footing on Soils to Support Highway Bridge Structures", revised December 2017) indicated that angular distortion (differential settlements) of 1/250 and vertical movements of 2 to 4 inches depending on the span length appear to be acceptable. For this bridge structure, the soils that were encountered on both sides of the bridge show similarity in formation and consistency (density and strength). As such, differential settlements are estimated to be within allowable limits.

Footings bearing on soil should be constructed a minimum of four feet below the exposed ground surface (both laterally and vertically) to provide frost protection. Soil properties and groundwater levels featured in the analyses were developed using engineering judgment based on field measurements and soil classifications in addition to laboratory test results assuming the subgrade is prepared in accordance with the **Section 5.1**, below.

4.1.2 Abutment Settlement

For the Service Limit State, the estimated settlement was calculated based on an estimated load of 2.76 ksf (net load of 2.36 ksf). It should be noted that foundation settlements are linearly related to the working load (service limit load). In addition, the settlement for a net service load that results in one (1) inch of settlement was calculated. The calculated immediate settlements summarized in **Table 4**.

Table 4: Summary of Settlements
(Settlements Determined by Hough Method LRDF-BDS Article 10.6.2.4.2)

Location	*Net Service Load (ksf)*	*Settlement (Inches)*
Abutments	*2.36*[1]	*0.2*
	56.9	*1.0*

Notes:
1. Net load for soil, abutment, and assumed traffic load

4.1.3 Overturning and Sliding

For the proposed arch bridge structure and the abutment walls are restrained, the lateral loads will be resisted by the arch structures and should not affect the foundations. Accordingly, the foundation is estimated to have an eccentricity of 0.0, unless the arch (abutment) wall is eccentrically placed. However, if a different structure (other than arch type) is used where abutment walls are not restrained, sliding analyses should be performed in accordance with LRFD-BDS Section 10.6.3.4, so the resistance to sliding (R_R) is as follows:

$$R_R = \phi_T R_T + \phi_{ep} R_{ep} \qquad \text{(LRFD-BDS Eq. 10.6.3.4-1)}$$

The recommended resistance factor (ϕ_{ep}) for passive resistance should be 0.50, based on LRFD-BDS Table 10.5.5.2.2-1. The footing will be supported on crushed rock, so the factored resistance against failure by sliding (R_T) should be as follows:

$R_T = V \times C \tan\phi_f$,

Where V is the factored normal load, ϕ_f is the angle of internal friction for the glacial till = 38°. The value for C should be 0.8 for the proposed precast concrete foundations for the abutment footings and C should be 1.0 for the proposed cast-in-place concrete foundations for the wing wall footings (LRFD-BDS Section 10.6.3.4 and Table 10.5.5.2.2-1).

Using the angle of internal friction for the glacial till is recommended because it is expected to be more conservative than the ϕ_f for crushed rock. The value for V is the total vertical force on the 10-foot-wide footings.

We recommend placing structural fill behind the proposed abutments and wing walls, so the following soil parameters are recommended for design of the proposed abutments and wing walls:

- Design earth pressure coefficient, $0.5*(K_a + K_o) = 0.58$ (MassDOT LRFD Bridge Manual)
- Resistance factor for sliding (ϕ_T) (LRFD-BDS Table 10.5.5.2.2-1):
  - Abutments: $\phi_T = 0.90$ (precast concrete on sand)
  - Wing walls: $\phi_T = 0.80$ (cast-in-place concrete on sand)
- Soil friction angle, $\phi = 32$ degrees for retained structural fill.
- Soil moist unit weight, $\gamma = 120$ pounds per cubic foot for retained fill.

The proposed abutment backfill should be designed to drain, and therefore, be analyzed assuming that hydrostatic pressure will not be applied to the abutment. Note, the design earth pressure coefficient assumes level backfill behind the abutments. The recommended earth pressure coefficients are summarized in **Table 5**.

Table 5: Earth Pressure Coefficients

Property	Existing Fill	Structural Fill	Glacial Till
At Rest Earth Pressure, K_o	0.50	0.47	0.41
Active Earth Pressure, K_a	0.30	0.28	0.24
Passive Earth Pressure, K_p	5.05	5.35	7.38

4.2 Seismic Design Parameters

In general accordance with LRFD-Seismic, Article 3.4, the seismic ground shaking hazards were characterized using the online AASHTO-2009 web service modeling developed by the U.S. Geological Survey (USGS) (AASHTO-2009 Web Service Documentation (usgs.gov)). Note, LRFD-Seismic, Article 1.2 states that the USGS prepared maps with seismic design parameters and a ground motion software tool. Although LRFD-Seismic states the software tool was packaged as a CD-ROM provided with this Guide, the CD was not provided with the electronic copy of LRFD-Seismic and the USGS online ground motion software tool was used. The results from the software tool were consistent with the values indicated maps in LRFD-Seismic Figures 3.4.1-2a through 3.4.1-4b.

The average SPT N value (N Bar) for the West Abutment were used to determine the Site Class for input for the analysis. Based on the methodology described LRFD-Seismic, Article 3.4.2.2, N Bar value for the West Abutment was 21 blows per foot, which corresponds to Site Class D (LRFD-Seismic, Table 3.4.2.1-1). The analysis output is presented in **Appendix D** with the documentation describing the USGS ground motion software tool.

Based on the USGS AASHTO-2009 web service ground motion software tool analysis, the expected ground motions were as follow:

- Potential Horizontal Ground Acceleration, PGA: 0.088g [8]
- Site coefficient for peak ground acceleration, F_{pga} = 1.6
- Design peak ground acceleration, $A_s = F_{pga}$ PGA = 0.142g
- 0.2 Second Spectral Acceleration Coefficient, S_s = 0.174g
- Site coefficient for 0.2 second spectral acceleration, F_a = 1.6
- Design short-period (0.2-second) spectral acceleration, $S_{DS} = F_a S_S$ = 0.278g
- 1.0 Second Spectral Acceleration Coefficient, S_1= 0.042g
- Site coefficient for 1.0 second spectral acceleration, F_v = 2.4
- Design 1-second spectral acceleration, $S_{D1} = F_v S_1$ = 0.101g
- Seismic Design Category, SDC = A

The recommended seismic design parameters are summarized in **Table 6**.

Table 6: Recommended Seismic Design Parameters

Seismic Design Parameter	Coefficient / Value
Design peak ground acceleration, A_s	0.142g
Design 0.2-second spectral acceleration, S_{DS}	0.278g
Design 1-second spectral acceleration, S_{D1}	0.101g
Site Class (based on existing fill)	D
Seismic Design Category, SDC	A

4.2.1 Liquification Potential

The SDC is A, so a liquefaction analysis was not required, although the existing fill soils in the existing railway embank behind the bridge abutments (i.e., to a depth of approximately 18 feet bgs) had N Bar values of 12.8 and 4.5 for the East and West Abutments, respectively. Furthermore, these soils are not below the groundwater table, so liquification potential for these soils was considered to be low. See **Appendix D** for the calculations of the N Bar values.

The soils below the abutment and wing wall footings are generally dense glacial till and the upper 75 feet of soils supporting the footings (i.e., the glacial till) had corrected N-Values ($N_{1,60}$) of approximately 90 blows per foot. Therefore, the liquification potential for these

[8] g = units of gravitational acceleration.

soils was considered to be very low, even though these soils are below the groundwater table.

The potential for other issues related to earthquake-induced vibrations are considered low.

5 Construction Recommendations

5.1 Earthwork

The following recommendations are provided based on the Site soils encountered.

Existing subsurface utilities, if present, which conflict with the proposed development should be removed or relocated, if encountered. In areas of backfill placement and/or construction of shallow foundations, all topsoil and organic or otherwise deleterious material should be removed before foundation construction or new fill placement. Any obstructions that would interfere with new foundation construction must be removed in their entirety from a foundation location. Loose or unstable areas identified during excavation should be densified in-place or excavated and replaced with compacted structural fill.

The glacial till may contain variable amounts fines (silt) content. Any material, such as topsoil, that contains organic materials should be excluded from reuse in compacted backfills. Once a subgrade has been prepared, construction traffic should be controlled in such a fashion as to minimize subgrade disturbance.

As per Division II, Section 100, Subsection 150 of the Massachusetts Highway Department (MassDOT) Standard Specifications for Highways and Bridges, 2022 edition (Standard Specifications), imported structural fill, if required, should consist of well-graded granular material that meets the gradation criteria for MassDOT Item M1.03.0, Gravel Borrow, Type a (MassDOT Type a Gravel Borrow). The proposed structural fill shall not be excessively moist; shall be free from ice and snow, roots, surface coatings, sod, loam, clay, rubbish, elastic or foreign matter, and/or other deleterious or organic matter, and shall be adequately graded for satisfactory compaction into a stabilized soil structure. The MassDOT Type a Gravel Borrow shall conform to the gradation requirements in **Table 7**.

Table 7: MassDOT M1.03.0-1 Type a Gravel Borrow for Bridge Foundations

Sieve Size	Percent Passing by Weight
6-inch	100*
¾-inch	70
½-inch	50-85
No. 4	40-75
No. 50	8-28
No. 200	0-10

* Maximum nominal particle size per Standard Specifications

Backfills and fills should be placed in layers not exceeding 8 inches loose thickness. This criterion may be modified in the field depending on the conditions present at the time of

construction and on the compaction equipment used. Structural fills for the support of foundations should be compacted to not less than 98% of maximum dry density (ASTM D698 [ASTM 2021]). Fills in paved areas, if planned, should be compacted to not less than 95% of maximum dry density. Fills in landscaped areas should be compacted to at least 90% of maximum dry density.

5.2 Temporary Excavation Support

Confined excavations deeper than four (4) feet in soil may be required for construction activities, in which case side walls of such excavations must be sloped, benched, or adequately shored per OSHA 29 CFR 1926 regulations. The site soils and fill are classified as OSHA Type C – granular soil or low cohesive strength soil. Open excavations above the groundwater table in the natural soils should not be steeper than 1.5 horizontal on 1 vertical (1.5H:1V). Trench boxes and/or sheeting may be used in conjunction with open cut slopes to permit access to confined excavations. Temporary excavation support systems should be designed by an experienced Massachusetts Professional Engineer based on the parameters listed in **Table 2** and **Table 5**.

5.3 Groundwater Management and Considerations

Groundwater was encountered in both borings, but seasonal high groundwater at the Site is expected to vary and perched water may be encountered within the existing abutments. Thus, excavations for foundations in soils at the Site may encounter groundwater. When groundwater is encountered concrete placement in excavation may need to be conducted using tremie pipes or other methods to fill the foundation forms upwards from the bottom of the excavation.

5.4 Surface Drainage

Positive surface water drainage gradients at least 2 percent should be provided to direct surface water away from foundations towards suitable discharge facilities. Ponding of surface water should not be allowed on or adjacent to excavations, structures, slabs-on-grade, or pavements. Any rain runoff should be directed away from foundation, if applicable. Downspouts if used may discharge onto splash-blocks provided the area is covered with concrete slabs or asphalt concrete pavements.

6 GENERAL COMMENTS/LIMITATIONS

The analysis and recommendations presented in this report are based solely upon the data obtained from the boring locations, which are shown on **Figure 2**, as well as from published information. This report does not reflect variations that may occur between boring locations or due to modifying effects of weather or man-made disturbances. The nature and extent of such variations may not become evident until during or after construction. If variations are identified, further evaluation should be performed and supplemental recommendations may be warranted.

The work performed for this report does not include environmental assessment of the Site or delineation of contaminated soils or groundwater by TRC.

We have prepared this report for use by TEC specifically and solely to provide geotechnical recommendations for the design and construction of the project identified in **Section 1.2** of this report.

This work has been done in accordance with our authorized scope of work and in accordance with generally accepted practice in the fields of geotechnical and foundation engineering. This warranty is in lieu of all other warranties either expressed or implied. Our conclusions and recommendations are based on the data revealed by this investigation. We are not responsible for any conclusions or opinions drawn from the data included herein, other than those specifically stated, nor are the recommendations presented in this report intended for direct use as construction specifications. This report is intended for use with regard to the specific project discussed herein and any changes in loads, structures, or locations should be brought to TRC's attention so that we may determine how they may affect our conclusions. An attempt has been made to provide for normal contingencies, but the possibility remains that unexpected conditions may be encountered during construction. If this should occur, or if additional or contradictory data are revealed in the future, we should be notified so that modifications to this report can be made, if necessary. If we do not review the relevant construction documents and witness the relevant construction operations, then we cannot be responsible for any problem, which may arise, from the misunderstanding or misinterpretation of this report or failure to comply with our recommendations.

FIGURES

Figures 1: Site Location Map

Figures 2: Boring Location Map

Figures 3: Subsurface Profile

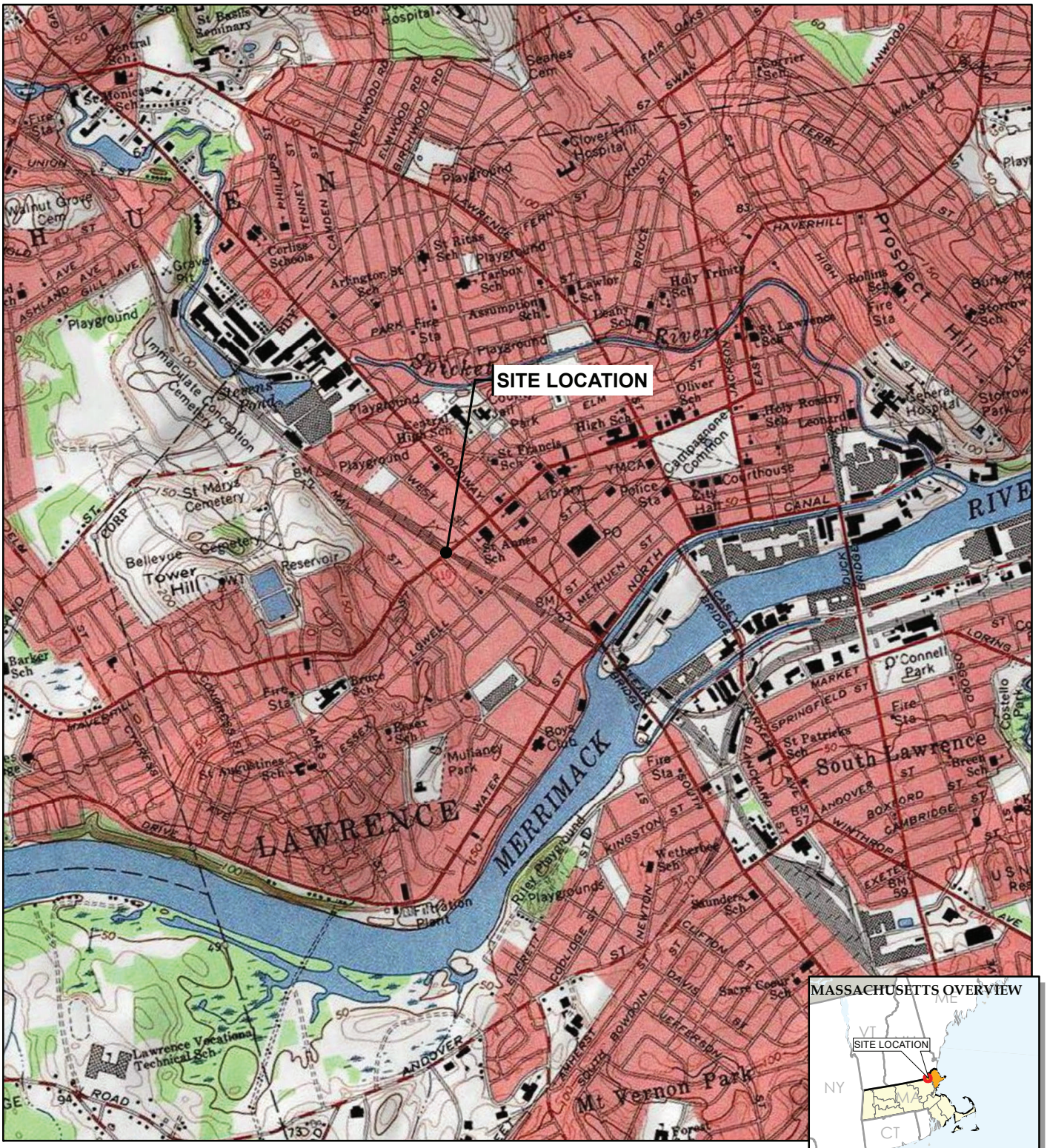

BASE MAP FROM USGS 7.5 MINUTE TOPOGRAPHIC QUADRANGLE SERIES.

N

1 " = 2,000 '
1:24,000

0 2,000 4,000
FEET

TRC
708 Heartland Trail
Suite 3000
Madison, WI 53717
Phone: 608.826.3600
TRC - GIS

PROJECT:
MASS DOT
LOWELL STREET OVER B&M RAILROAD
LAWRENCE, MASSACHUSETTS
GEOTECHNICAL REPORT

TITLE:
SITE LOCATION MAP

WORKING COPY

DRAWN BY:	S. MAJOR
CHECKED BY:	
APPROVED BY:	
DATE:	SEPTEMBER 2020
PROJ. NO.:	297487
FILE:	297487-001slm.mxd

FIGURE 1

S:\1-PROJECTS\Massachusetts_DOT\Lowell\2020_297487\297487-001slm.mxd -- Saved By: SMAJOR on 9/3/2020, 13:00:38 PM

LEGEND

- MASSDOT BORING (2012)
- TRC SOIL BORING

NOTES

1. BASE MAP IMAGERY FROM GOOGLE EARTH PRO, 2019.
2. BORINGS FROM MASSACHUSETTS DEPARTMENT OF TRANSPORTATION.

N

0 60 120 Feet

1 " = 60 '

1:720

PROJECT:
MASS DOT
LOWELL STREET OVER B&M RAILROAD
LAWRENCE, MASSACHUSETTS
GEOTECHNICAL REPORT

TITLE:
BORING LOCATION MAP

DRAWN BY:	S. MAJOR	PROJ. NO.:	297487
CHECKED BY:	W. NARIN van COURT		
APPROVED BY:	W. NARIN van COURT		**FIGURE 2**
DATE:	JULY 2021		

TRC
708 Heartland Trail
Suite 3000
Madison, WI 53717
Phone: 608.826.3600

FILE NO.: 297487-002.mxd

Plot Date: 9/4/2020, 15:12:47 PM by SMAJOR -- LAYOUT: ANSI B (11"x17")
Path: S:\1-PROJECTS\Massachusetts_DOT\Lowell\2020_297487\297487-002.mxd

Coordinate System: NAD 1983 UTM Zone 16N (Meter)
Map Rotation: 0

TRC - GIS

A00880 - 24

Proposal No. 608930-128034

11x17 --- USER: CDaubert --- ATTACHED XREFS: --- ATTACHED IMAGES:
DRAWING NAME: \\augusta-fp1\Environmental\RMD\Engineering\CJD working 2022-10-18\ LOWELL STREET BR BORINGS.dwg --- PLOT DATE: October 24, 2022 - 3:45PM --- LAYOUT: FIG 3

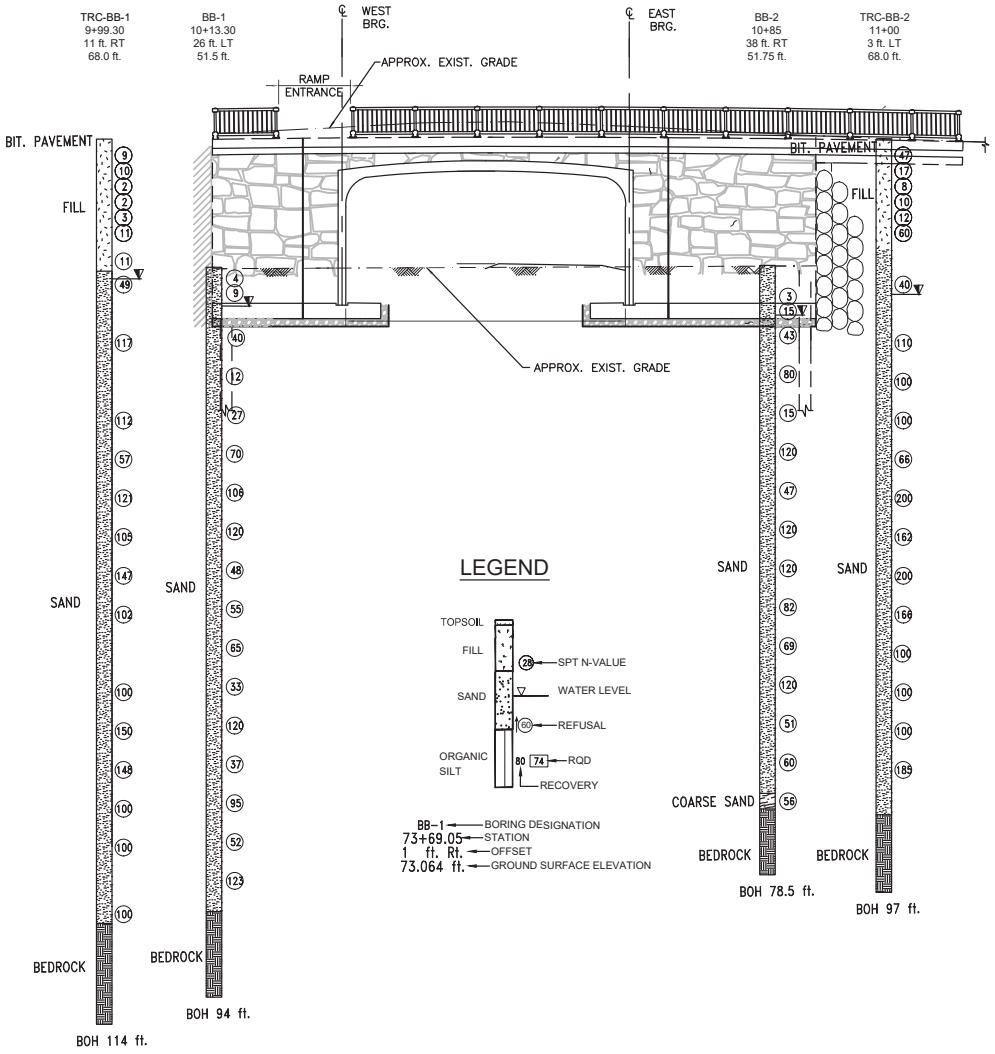

MASSACHUSETTS DEPARTMENT OF TRANSPORTATION
HIGHWAY DIVISION
10 PARK PLAZA BOSTON, MASS

0 16 32
SCALE IN FEET
1/16" = 1'

TRC
650 Suffolk Street
Suite 200
Lowell, MA 01854
Phone: 978.970.5600

PROJECT:
MASSDOT
B&MRR BRIDGE - LOWELL STREET, LAWRENCE, MA
BRIDGE NO. L-04-027

TITLE:
SUBSURFACE PROFILE

DRAWN BY:	CJD
CHECKED BY:	WN
APPROVED BY:	WN
DATE:	OCTOBER 2022
PROJ. NO.:	297487
FILE:	LOWELL STREET BR BORINGS.dwg

FIGURE 3

Appendix A
Definition of Terms

DEFINITION OF TERMS

PRIMARY DIVISIONS			SOIL TYPE		SECONDARY DIVISIONS
COARSE GRAINED SOILS (MORE THAN HALF OF MATERIAL IS LARGER THAN NO. 200 SIEVE SIZE)	GRAVELS (MORE THAN HALF OF COARSE FRACTION IS LARGER THAN NO. 4 SIEVE)	CLEAN GRAVELS (Less than 5% Fines)	GW		Well graded gravels, gravel–sand mixtures, little or no fines
			GP		Poorly graded gravels or gravel–sand mixtures, little or no fines
		GRAVEL WITH FINES	GM		Silty gravels, gravel–sand–silt mixtures, plastic fines
			GC		Clayey gravels, gravel–sand–clay mixtures, plastic fines
	SANDS (MORE THAN HALF OF COARSE FRACTION IS SMALLER THAN NO. 4 SIEVE)	CLEAN SANDS (Less than 5% Fines)	SW		Well graded sands, gravelly sands, little or no fines
			SP		Poorly graded sands or gravelly sands, little or no fines
		SANDS WITH FINES	SM		Silty sands, sand–silt–mixtures, non–plastic fines
			SC		Clayey sands, sand–clay mixtures, plastic fines
FINE GRAINED SOILS (MORE THAN HALF OF MATERIAL IS SMALLER THAN NO. 200 SIEVE SIZE)	SILTS AND CLAYS (LIQUID LIMIT IS LESS THAN 50 %)		ML		Inorganic silts and very fine sands, rock flour, silty or clayey fine sands or clayey silts with slight plasticity
			CL		Inorganic clays of low to medium plasticity, gravelly clays, sandy clays, silty clays, lean clays
			OL		Organic silts and organic silty clays of low plasticity
	SILTS AND CLAYS (LIQUID LIMIT IS GREATER THAN 50 %)		MH		Inorganic silts, micaceous or diatomaceous fine sandy or silty soils, elastic silts
			CH		Inorganic clays of high plasticity, fat clays
			OH		Organic clays of medium to high plasticity, organic silts
HIGHLY ORGANIC SOILS			PT		Peat and other highly organic soils

PARTICLE SIZE RELATIONSHIPS

SILT AND CLAY	SAND			GRAVEL		COBBLE	BOULDER
	FINE	MEDIUM	COARSE	FINE	COARSE		

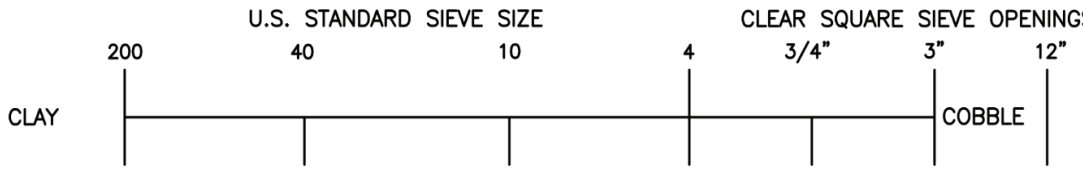

Appendix B
Boring Logs

TRC

SOIL BORING LOG

BORING NO. TRC - BB - 1

Facility/Project Name:	Boring Location:	Surface Elev. (ft):	Total Depth (ft bgs):	Borehole Dia. (in):
Lowell Street Bridge -Lawrence, MA	N: 3082429.6 E: 744512.8	68.0	114.0	4.25

Drilling Firm:	Drilling Method:	Personnel:	Date Started:	Date Completed:	Water Depth (ft bgs):
GeoSearch Drilling	HSA / Wash and Drive with 3" Casing SPT w/ Automatic Hammer	Logged By - S. Sullivan Driller - R. Dean	10/9/18	1/15/19	~18

SAMPLE NUMBER AND TYPE	RECOVERY (%)	BLOW COUNTS	DEPTH IN FEET	LITHOLOGIC DESCRIPTION	USCS	GRAPHIC LOG	N VALUE (BLOWS)	DENSITY (PCF)	COMPRESSIVE STRENGTH (TSF)	MOISTURE CONTENT (%)	LIQUID LIMIT	PLASTICITY INDEX	P 200 (%)	COMMENTS
				Bituminous Pavement, ~ 1-foot thick										
1 SS	50	2 4 4 5		brown, loose, fine to coarse **SAND**, trace gravel, dry, fill										
2 SS	25	11 7 4 5		top 3 inches: gray, medium dense **CONCRETE**, dry, fill brown, medium dense, fine to coarse **SAND**, some gravel, dry, fill										
3 SS	54	1 1 1 1	5	brown, very loose, fine to coarse **SAND**, some gravel, moist, fill brown, very loose, fine **SAND**, dry, fill										
4 SS	25	3 1 1 1		brown, very loose, fine **SAND**, some gravel, dry, fill						6.2			14.9	
5 SS	8	3 1 2 1	10	brown, very loose, fine **SAND**, trace gravel, dry, fill										
6 SS	42	4 3 8 3		brown, medium dense, fine **SAND**, some gravel, dry, fill										
				cobbles ~13 to ~15 ft bgs, fill										
7 SS	54	2 3 8 11	15	brown, medium dense, fine **SAND**, trace gravel, moist, fill brown, medium dense, fine to coarse **SAND**, some gravel, moist, fill										
8 SS	58	13 18 31 43		brown, medium dense, fine **SAND**, wet, fill brown, dense, fine **SAND AND SILT**, some gravel, trace weathered rock, wet, till						10.6			36.8	
			20											

GEOTECH LOG LAWRENCE BRIDGE.GPJ 8/11/20

Checked By:	Date:	Approved By:	Date:	Firm: TRC
Z. Bauman	8/11/20			2 Liberty Square, 6th Floor, Boston, MA Boston, MA 02109 Fax

TRC

SOIL BORING LOG

BORING NO. TRC - BB - 1

SAMPLE NUMBER AND TYPE	SAMPLE RECOVERY (%)	BLOW COUNTS	DEPTH IN FEET	LITHOLOGIC DESCRIPTION	USCS	GRAPHIC LOG	N VALUE (BLOWS)	DENSITY (PCF)	COMPRESSIVE STRENGTH (TSF)	MOISTURE CONTENT (%)	LIQUID LIMIT	PLASTICITY INDEX	P 200 (%)	COMMENTS
9 SS	100	30 47 70 90	25	brown, very dense, fine **SAND**, some silt, trace gravel, dry, till			117			7.7			46.9	
10 SS	0	50/.5 - - -	30											Auger refusal at 28.5 ft bgs SPT Refusal at 29.0 ft bgs Core through boulder 28.5 to 29.5 ft bgs. Drive casing to 34 ft bgs
11 SS	90	48 57 55 69	35	brown, very dense, fine **SAND AND SILT**, some gravel, dry			112							
12 SS	54	24 33 100/5 -	40	brown, very dense, coarse **SAND**, moist to wet			57							
13 SS	58	41 80 100/5 -	45	brown, very dense, fine **SAND**, trace gravel, some silt, moist			121							End of Boring at 46 ft bgs on 10/09/2018 Drive casing to 49 ft bgs and continue boring from 01/14/2019 to 01/15/2019; Drill open hole below 49 ft bgs
14 SS	17	100/4 - - -	50	light brown, very dense, fine **SAND**, trace gravel, some silt, wet										

GEOTECH LOG LAWRENCE BRIDGE.GPJ 8/11/20

TRC

SOIL BORING LOG

BORING NO. TRC - BB - 1

SAMPLE NUMBER AND TYPE	RECOVERY (%)	BLOW COUNTS	DEPTH IN FEET	LITHOLOGIC DESCRIPTION	USCS	GRAPHIC LOG	N VALUE (BLOWS) 0 10 20 30 40 50	DENSITY (PCF)	COMPRESSIVE STRENGTH (TSF)	MOISTURE CONTENT (%)	LIQUID LIMIT	PLASTICITY INDEX	P 200 (%)	COMMENTS
15 SS	92	33 47 58 59	55	light brown, very dense, coarse **SAND**, trace gravel, trace silt, moist			105							
16 SS	75	59 75 72 100/4	60	brown, very dense, fine **SAND**, trace gravel, moist			147							
17 SS	75	30 28 74 100/4	65	brown, very dense, fine **SAND**, some gravel, some silt, moist			102							
18 SS	13	100/3 - - -	70	brown to black, very dense, fine **SAND**, trace silt, moist										
19 SS	33	90 100/3 - -	75	light brown, very dense, fine **SAND**, trace gravel, some silt, moist			100							
19 SS	167	44 74 76	80	brown, very dense, fine **SAND**, moist			150							

GEOTECH LOG LAWRENCE BRIDGE.GPJ 8/11/20

TRC

SOIL BORING LOG

BORING NO. TRC - BB - 1

SAMPLE NUMBER AND TYPE	SAMPLE RECOVERY (%)	BLOW COUNTS	DEPTH IN FEET	LITHOLOGIC DESCRIPTION	USCS	GRAPHIC LOG	N VALUE (BLOWS) 0 10 20 30 40 50	DENSITY (PCF)	COMPRESSIVE STRENGTH (TSF)	MOISTURE CONTENT (%)	LIQUID LIMIT	PLASTICITY INDEX	P 200 (%)	COMMENTS
		100/4												
20 SS	88	46 70 78 87	85	brown, very dense, fine **SAND**, trace silt, moist			148							
21 SS	42	55 100/4 - -	90	brown, very dense, fine **SAND**, some gravel, trace silt, moist			100							
22 SS	46	50 100/5 - -	95	brown, very dense, fine **SAND**, trace silt, moist			100							
23 SS	42	87 100/1 - -	100	brown, very dense, fine **SAND**, some silt, trace clay, moist			100							
														Roller bit to 104 ft bgs and start coring
														Rock coring with NQ-2 core barrel
24 RC	100		105	moderately hard, fresh, slightly to moderately fractured, gray to dark gray, fine to very fine grained, **QUARTZITE**, thin horizontal bedded, shallow dipping fractures; RQD = 52%										1.2 minutes / foot 1.3 minutes / foot 2.2 minutes / foot 2.2 minutes / foot 2.1 minutes / foot

GEOTECH LOG LAWRENCE BRIDGE.GPJ 8/11/20

TRC

SOIL BORING LOG

BORING NO. TRC - BB - 1

SAMPLE NUMBER AND TYPE	SAMPLE RECOVERY (%)	BLOW COUNTS	DEPTH IN FEET	LITHOLOGIC DESCRIPTION	USCS	GRAPHIC LOG	N VALUE (BLOWS) 0 10 20 30 40 50	DENSITY (PCF)	COMPRESSIVE STRENGTH (TSF)	MOISTURE CONTENT (%)	LIQUID LIMIT	PLASTICITY INDEX	P 200 (%)	COMMENTS
25 RC	100		110	hard, fresh, slightly to moderately fractured, gray to dark gray, very fine grained, **META SILTSTONE**, thin horizontal bedded, shallow dipping fractures; RQD = 75%										1.8 minutes / foot 3.6 minutes / foot 2.8 minutes / foot 2.6 minutes / foot 3.1 minutes / foot
				BORING TERMINATED AT 114' BGS.										
			115											
			120											
			125											
			130											
			135											

GEOTECH LOG LAWRENCE BRIDGE.GPJ 8/11/20

SOIL BORING LOG

BORING NO. TRC - BB - 2

Facility/Project Name:	Boring Location:	Surface Elev. (ft):	Total Depth (ft bgs):	Borehole Dia. (in):
Lowell Street Bridge - Lawrence, MA	N: 3082494.4 E: 744587.1	68.0	97.0	

Drilling Firm:	Drilling Method:	Personnel:	Date Started:	Date Completed:	Water Depth (ft bgs):
GeoSearch Drilling	HSA / Wash and Drive with 3" Casing SPT w/ Automatic Hammer	Logged By - S. Sullivan Driller - R. Dean	10/10/18	1/17/19	~20

SAMPLE NUMBER AND TYPE	RECOVERY (%)	BLOW COUNTS	DEPTH IN FEET	LITHOLOGIC DESCRIPTION	USCS	GRAPHIC LOG	N VALUE (BLOWS)	DENSITY (PCF)	COMPRESSIVE STRENGTH (TSF)	MOISTURE CONTENT (%)	LIQUID LIMIT	PLASTICITY INDEX	P 200 (%)	COMMENTS
1 SS	90	70 32 15 12		Bituminous Pavement: ~ 1-foot thick brown, dense, coarse **SAND**, some gravel, dry (fill)										
2 SS	54	11 10 7 5		brown, dense, fine to coarse **SAND**, trace gravel, dry (fill) brown, medium dense, fine to coarse **SAND**, trace gravel (fill)										
3 SS	63	3 3 4 10	5	brown, loose, fine **SAND**, trace gravel, dry, (fill)										
4 SS	29	5 6 5 6		gray, medium dense, fine to coarse **SAND**, some gravel, dry, (fill)						8.7			39.3	
5 SS	46	6 6 7 8		brown, medium dense, fine **SAND**, some gravel, dry, (fill)										
6 SS	46	- 41 19 15	10	brown, very dense, fine to coarse **SAND**, trace gravel, trace silt, moist			60							
7 SS	92	14 19 18 17		brown, dense, fine to coarse **SAND**, some gravel, trace silt, wet brown, dense, fine **SAND**, trace gravel, trace silt, moist						10.9			40.8	
8 SS	75	15 18 22 42	15 20	brown, dense, fine to coarse **SILT**, trace gravel, trace sand, moist, (till) brown, dense, coarse **SAND AND SILT**, trace gravel, moist, (till)										

GEOTECH LOG LAWRENCE BRIDGE.GPJ 8/11/20

Checked By:	Date:	Approved By:	Date:	Firm: TRC
Z. Bauman	8/11/20			2 Liberty Square, 6th Floor, Boston, MA Boston, MA 02109 Fax

TRC

SOIL BORING LOG

BORING NO. TRC - BB - 2

SAMPLE NUMBER AND TYPE	RECOVERY (%)	BLOW COUNTS	DEPTH IN FEET	LITHOLOGIC DESCRIPTION	USCS	GRAPHIC LOG	N VALUE (BLOWS) 0 10 20 30 40 50	DENSITY (PCF)	COMPRESSIVE STRENGTH (TSF)	MOISTURE CONTENT (%)	LIQUID LIMIT	PLASTICITY INDEX	P 200 (%)	COMMENTS
9 SS	50	35 75 35 72	25	brown, very dense **SILT**, some gravel, moist, (till) brown, very dense **GRAVEL**, some coarse sand, trace silt, wet, (till)			110			11.8			31.2	
10 SS	79	28 49 51 71	30	brown, very dense **SILT**, some gravel, trace sand, moist, (till)			100							
11 SS	33	28 100/1.5 - -	35	brown, very dense **SILT**, trace gravel, moist, (till)			100							
12 SS	71	18 31 35 35	40	brown, very dense, coarse **SAND**, moist			66							
13 SS	63	61 100 100/4.5 -	45	gray, very dense **GRAVEL**, wet brown, very dense, coarse **SAND**, trace gravel, some silt, moist			200							
14 SS	54	46 62 100/5.5 -	50	brown, very dense, fine **SAND**, trace silt, moist			162							

GEOTECH LOG LAWRENCE BRIDGE.GPJ 8/11/20

TRC

SOIL BORING LOG

BORING NO. TRC - BB - 2

SAMPLE NUMBER AND TYPE	RECOVERY (%)	BLOW COUNTS	DEPTH IN FEET	LITHOLOGIC DESCRIPTION	USCS	GRAPHIC LOG	N VALUE (BLOWS) 0 10 20 30 40 50	DENSITY (PCF)	COMPRESSIVE STRENGTH (TSF)	MOISTURE CONTENT (%)	LIQUID LIMIT	PLASTICITY INDEX	P 200 (%)	COMMENTS
15 SS	42	62 100 100/4 -	55	brown, very dense, fine **SAND**, trace silt, moist			200							
16 SS	63	44 66 100/5.5 -	60	brown, very dense, fine **SAND**, trace silt, moist brown, very dense, fine **SILT**, trace gravel, moist			166							
17 SS	33	78 100/4 - -	65	brown, very dense, fine **SAND**, trace silt, moist			100							
18 SS	38	66 100/4 - -	70	brown, very dense, fine **SAND**, trace silt, moist, (till)			100							
19 SS	33	100 100/2 - -	75	gray, very dense, fine **SILT**, some gravel, some sand, moist, (till)			100							
20 SS	58	35 85 100/4	80	gray, very dense **SILT**, trace gravel, some fine sand, moist			185							

GEOTECH LOG LAWRENCE BRIDGE.GPJ 8/11/20

TRC

SOIL BORING LOG

BORING NO. TRC - BB - 2

SAMPLE NUMBER AND TYPE	SAMPLE RECOVERY (%)	BLOW COUNTS	DEPTH IN FEET	LITHOLOGIC DESCRIPTION	USCS	GRAPHIC LOG	N VALUE (BLOWS) 0 10 20 30 40 50	DENSITY (PCF)	COMPRESSIVE STRENGTH (TSF)	MOISTURE CONTENT (%)	LIQUID LIMIT	PLASTICITY INDEX	P 200 (%)	COMMENTS
		-	85											Rock coring with NQ-2 core barrel
21 RC	75		90	hard, fresh, slightly to moderately fractured, gray to dark gray, fine to very fine grained, **META SILTSTONE**, thin to medium bedding, moderately dipping joints; RQD = 45%										0.8 minutes / foot 2.5 minutes / foot 2.9 minutes / foot 2.1 minutes / foot 2.9 minutes / foot
22 RC	98		95	hard, fresh, slightly to moderately fractured, gray to dark gray, very fine grained, **META SILTSTONE**, thin to medium bedding, moderately dipping joints; RQD = 48%				168	1200					1.1 minutes / foot 2.1 minutes / foot 2.1 minutes / foot 2.0 minutes / foot 3.5 minutes / foot
			100	BORING TERMINATED AT 97' BGS.										
			105											

GEOTECH LOG LAWRENCE BRIDGE.GPJ 8/11/20

massDOT Highway	NEW HAMPSHIRE BORING, INC. P.O. Box 165 Derry, NH 03038	Phone: (603)437-1610 Fax: (603) 437-0034 E Mail: nhb@nhboring.com	**Boring No.** BB-1 Scale 1" = 5'
City/Town: Lawrence	Bridge: L-04-027	Project File No: 604839	Contract No: 57734
Project: Lowell Street over the B&M Railroad		Date & Time Started: 06-04-12 12:00 pm	Total Hours: 26
Groundwater Depth: 5'	Date & Time: 06-07-12 1:00 pm	Date & Time Completed: 06-07-12 1:30 pm	
Coordinates: N 3082472.43	E 744505.92	Driller's Name: Michael Misiaszek	Helper's Name: Shawn Burto
Ground Elevation: 51.50	Inspector's Name: Cory St. Sauveur	Inspector's Company:	Massachusetts Department of Transportation

Sample Number	Depth Range (Feet)	Blow Counts per 6 Inches Coring Times Minute Per Foot	Recovery Inches	Field Description	Strata Changes
S-1	0' - 2'	4 3 4 7	9"	Wet, loose, dark brown, FINE TO COARSE SAND, some organic silt.	
S-2	4' - 6'	9 11 15 19	15"	Wet, medium dense, gray, FINE TO COARSE SAND, some inorganic silt.	
S-3	9' - 11'	40 40 40 50	20"	Wet, very dense, gray, FINE TO COARSE SAND, some inorganic silt.	
S-4	14' - 15'9"	12 21 35 85/3"	12"	Wet, very dense, gray, FINE TO COARSE SAND, some inorganic silt.	
S-5	19' - 21'	27 31 30 31	17"	Wet, very dense, brown, FINE TO COARSE SAND, some inorganic silt, trace fine gravel.	
S-6	24' - 24'7"	70 50/1"	4"	Wet, very dense, brown, FINE TO COARSE SAND, some inorganic silt.	
S-7	29' - 29'6"	106 14/0"	5"	Wet, very dense, brown, FINE TO COARSE SAND, some inorganic silt.	
S-8	34' - 34'5"	120/5"	5"	Wet, very dense, brown, FINE TO COARSE SAND, some inorganic silt.	
S-9	39' - 39'11"	48 72/5""	7"	Wet, very dense, brown, FINE SAND, some inorganic silt.	
S-10	44' - 45'	55 71	10"	Wet, very dense, brown, FINE SAND, some inorganic silt.	
S-11	49' - 49'7"	65 55/1"	5"	Wet, very dense, brown, FINE SAND, some inorganic silt.	
S-12	54' - 54'10"	33 87/4"	6"	Wet, very dense, brown, FINE SAND, some inorganic silt.	
S-13	59' - 59'5"	120/5"	3"	Wet, very dense, brown, FINE TO COARSE SAND, some inorganic silt, trace fine gravel.	
S-14	64' - 64'10"	37 83/4"	7"	Wet, very dense, brown, FINE SAND, some inorganic silt.	
S-15	69' - 69'7"	95 25/1"	5"	Wet, very dense, brown, FINE SAND, some inorganic silt.	
S-16	74' - 74'10"	52 68/4"	7"	Wet, very dense, brown, FINE SAND, some inorganic silt.	
S-17	79' - 79'6"	123	5"	Wet, very dense, brown, FINE SAND, some inorganic silt.	
				Top of BEDROCK at 83'	83'
C-1	84' - 89'	7 9 12 12 13	60"	Roller bit to 84' and began coring. Hard, gray, slightly weathered, some fratures, APHANITIC SCHIST. Percent Recovery = 100%	
C-2	89' - 94'	13 12 14 10 9	60"	Hard, gray, slightly weathered, some fratures, APHANITIC SCHIST. Percent Recovery = 100%	
					94'
				Bottom of Exploration = 94'	

Remarks:
Boring moved prior to drilling from N3082470.57, E744502.92 to N3082472.43, E744505.92 for access constraints (slopes, adjacent structure, etc.) Borings on railroad property and will be grouted upon completion. The moisture content in S-1 and S-2 are wet due to the water introduced during the drilling process.

Protective Device - Stand: Box:
Well Depth: Solid Pipe:
Stick Up Pipe: Screen Pipe:

Penetration Resistance (N) Guide:

Cohesionless Soils (Sands, Gravels)		Cohesive Soils (Silts, Clays)	
Relative Density	Penetration Resistance	Consistency	Penetration Resistance
Very Loose	0 - 4	Very Soft	0 - 2
Loose	4 - 10	Soft	2 - 4
Medium Dense	10 - 30	Medium Stiff	4 - 8
Dense	30 - 50	Stiff	8 - 15
Very Dense	Over 50	Very Stiff	15 - 30
N=Sum of Second and Third 6" Blow Counts		Hard	Over 30

Terms Used for Second Entry of Descriptions: and = 40-50%, some = 10-40%, trace = 10% or less

Type of Drill Rig: CME-750
Arrow-Board: Signs: Cones: 1
Casing HW Size: 4" Depth: 83'6"
Hammer Weight: 300 lbs. Fall: 30"
Sampler Type: S/S Size: 1 3/8"
Automatic Hammer Weight:
Safety Hammer Weight: 140 lbs.
Donut Hammer Weight:
Fall: 30"
Core Barrel Type NX: Size: 2.15"

NEW HAMPSHIRE BORING, INC.
P.O. Box 165
Derry, NH 03038
Phone: (603) 437-1610
Fax: (603) 437-0034
E Mail: nhb@nhboring.com

Boring No. BB-2
Scale 1" = 5'

City/Town: Lawrence	Bridge: L-04-027	Project File No: 604839	Contract No: 57734
Project: Lowell Street over the B&M Railroad		Date & Time Started: 5-30-12 9:00 am	Total Hours: 26.5
Groundwater Depth: 6'6"	Date & Time: 06-04-12 11:00 am	Date & Time Completed: 06-04-12 11:30 am	
Coordinates: N 3082452.83	E 744596.52	Driller's Name: Michael Misiaszek	Helper's Name: Thomas Garside Jr.
Ground Elevation: 51.75	Inspector's Name: Cory St. Sauveur	Inspector's Company: Massachusetts Department of Transportation	

Sample Number	Depth Range (Feet)	Blow Counts per 6 Inches Coring Times Minute Per Foot	Recovery Inches	Field Description	Strata Changes
S-1	0' - 2'	3 5 7 9	4"	Wet, medium dense, dark brown, ORGANIC SILT, trace fine to coarse sand.	
S-2	4' - 6'	15 23 32 41	15"	Wet, very dense, gray, FINE SAND AND INORGANIC SILT, trace coarse sand.	
S-3	9' - 9'11"	43 77/5"	9"	Wet, very dense, brown, FINE TO COARSE SAND AND INORGANIC SILT.	
S-4	14' - 14'9"	80 40/3"	6"	Wet, very dense, gray, FINE SAND AND INORGANIC SILT, trace gravel.	
S-5	19' - 20'11"	15 35 45 75/5"	15"	Wet, very dense, gray, FINE TO COARSE SAND, some inorganic silt, some fine gravel.	
S-6	24' - 24'6"	120/6"	3"	Wet, very dense, gray, FINE TO COARSE SAND, some inorganic silt, some fine gravel.	
S-7	29' - 29'11"	47 73/5"	3"	Wet, very dense, brown, FINE SAND, some inorganic silt, trace coarse sand.	
S-8	34' - 34'5"	120/5"	4"	Wet, very dense, brown, FINE TO COARSE SAND, some inorganic silt.	
S-9	39' - 39'4"	120/4"	4"	Wet, very dense, brown, FINE SAND, some inorganic silt, trace coarse sand.	
S-10	44' - 44'7"	82 38/1"	7"	Wet, very dense, brown, FINE SAND, some inorganic silt.	
S-11	49' - 49'11"	69 51/5"	9"	Wet, very dense, brown, FINE SAND, some inorganic silt.	
S-12	54' - 54'4"	120/4"	3"	Wet, very dense, gray, FINE SAND, some inorganic silt, trace coarse sand.	
S-13	59' - 59'10"	51 69/4"	9"	Wet, very dense, brown, FINE SAND, some inorganic silt.	
S-14	64' - 64'3"	60 60/3"	9"	Wet, very dense, gray, FINE SAND, some inorganic silt.	68'
S-15	69' - 69'9"	56 64/3"	5"	Wet, very dense, gray, FINE TO COARSE SAND, some inorganic silt.	70'
				Top of BEDROCK at 70'	
				Advanced to 70'6" and began coring.	
C-1	70'6" - 75'6"	12 11 11 14 10	42"	Hard, gray, fractured, APHANITIC SCHIST. Percent Recovery = 70%	
C-2	75'6" - 78'6"	9 14 13	36"	Hard, gray, fractured, APHANITIC SCHIST. Percent Recovery = 100%	78'6"
				Bottom of Exploration = 78'6"	

Remarks:
Boring moved prior to drilling from N3082452.30, E744598.84 to N3082452.83, E744596.52 for access constraints (slopes, adjacent structure, etc.) Borings on railroad property and will be grouted upon completion. Retrieved only 8' of rock due to hitting sand seams and jamming barrell, hole called at 78'6" per on site inspector.

Protective Device - Stand: Box:
Well Depth: Solid Pipe:
Stick Up Pipe: Screen Pipe:

Penetration Resistance (N) Guide:

Cohesionless Soils (Sands, Gravels)		Cohesive Soils (Silts, Clays)	
Relative Density	Penetration Resistance	Consistency	Penetration Resistance
Very Loose	0 - 4	Very Soft	0 - 2
Loose	4 - 10	Soft	2 - 4
Medium Dense	10 - 30	Medium Stiff	4 - 8
Dense	30 - 50	Stiff	8 - 15
Very Dense	Over 50	Very Stiff	15 - 30
N=Sum of Second and Third 6" Blow Counts		Hard	Over 30

Terms Used for Second Entry of Descriptions: and = 40-50%, some = 20-40%, trace = 10% or less

Type of Drill Rig: CME-750
Arrow-Board: Signs: Cones: 1
Casing HW Size: 4" Depth: 70'
Hammer Weight: 300 lbs. Fall: 30"
Sampler Type: S/S Size: 1 3/8"
Automatic Hammer Weight:
Safety Hammer Weight: 140 lbs.
Donut Hammer Weight:
Fall: 30"
Core Barrel Type NX: Size: 2.15"

Appendix C
Soil Laboratory Test Results

GeoTesting EXPRESS

Technologies to manage risk for infrastructure

Boston
Atlanta
Chicago
Los Angeles
New York
www.geotesting.com

Transmittal

TO:

Suzanna Sullivan

TRC Solutions

2 Liberty Square, 6th Floor

Boston, MA 02109

DATE: 11/14/2018	GTX NO: 308995
RE: Lowell Street Bridge	

COPIES	DATE	DESCRIPTION
	11/14/2018	**October 2018 Laboratory Test Report**

REMARKS:

SIGNED: _____

Jonathan Campbell, Assistant Laboratory Manager

APPROVED BY: _____

Joe Tomei, Director of Testing Services

GeoTesting EXPRESS

Technologies to manage risk for infrastructure

Boston
Atlanta
Chicago
Los Angeles
New York
www.geotesting.com

November 14, 2018

Suzanna Sullivan
TRC Solutions
2 Liberty Square, 6th Floor
Boston, MA 02109

RE: Lowell Street Bridge, Lawrence, MA (GTX-308995)

Dear Suzanna Sullivan:

Enclosed are the test results you requested for the above referenced project. GeoTesting Express, Inc. (GTX) received seven samples from you on 10/18/2018. These samples were labeled as follows:

Boring Number	Sample Number	Depth
BB-1	BB-1	7-9
BB-1	BB-1	17-19
BB-1	BB-1	25-27
BB-2	BB-2	6-8
BB-2	BB-2	12-14
BB-2	BB-2	19-21
BB-2	BB-2	24-26

GTX performed the following tests on these samples:

6 ASTM D2216 - Moisture Content
1 ASTM D4972 - pH
6 ASTM D6913 - Sieve Analysis
1 ASTM G57 - Electrical Resistivity

GTX also subcontracted TEI Testing Services, LLC of Salt Lake City, UT to perform Sulfate and Chloride analyses on one of these samples. See the attached TEI test report for results.

A copy of your test request is attached.

The results presented in this report apply only to the items tested. This report shall not be reproduced except in full, without written approval from GeoTesting Express. The remainder of these samples will be retained for a period of sixty (60) days and will then be discarded unless otherwise notified by you. Please call me if you have any questions or require additional information. Thank you for allowing GeoTesting Express the opportunity of providing you with testing services. We look forward to working with you again in the future.

GeoTesting EXPRESS

Technologies to manage risk for infrastructure

Boston
Atlanta
Chicago
Los Angeles
New York

www.geotesting.com

Respectfully yours,

Jonathan Campbell
Assistant Laboratory Manager

GeoTesting Express, Inc. | 125 Nagog Park | Acton, MA 01720 | Toll Free 800 434 1062 | Fax 978 635 0266

GeoTesting EXPRESS

Technologies to manage risk for infrastructure

Boston
Atlanta
Chicago
Los Angeles
New York
www.geotesting.com

Geotechnical Test Report **11/14/2018**

GTX-308995

Lowell Street Bridge

Lawrence, MA

Prepared for:

TRC Solutions

GeoTesting EXPRESS

Client:	TRC Solutions				
Project:	Lowell Street Bridge				
Location:	Lawrence, MA			Project No:	GTX-308995
Boring ID:	---	Sample Type:	---	Tested By:	jbr
Sample ID:	---	Test Date:	10/24/18	Checked By:	emm
Depth :	---	Test Id:	478760		

Moisture Content of Soil and Rock - ASTM D2216

Boring ID	Sample ID	Depth	Description	Moisture Content,%
BB-1	BB- 1	7-9	Moist, dark brown silty sand with gravel	6.2
BB-1	BB- 1	17-19	Moist, olive brown silty sand with gravel	10.6
BB-1	BB- 1	25-27	Moist, dark olive gray silty sand	7.7
BB-2	BB- 2	6-8	Moist, olive gray sandy silt with gravel	8.7
BB-2	BB- 2	12-14	Moist, light brown clayey sand	10.9
BB-2	BB- 2	24-26	Moist, olive gray silty gravel with sand	11.8

Notes: Temperature of Drying : 110º Celsius

printed 10/25/2018 10:27:36 AM

Client:	TRC Solutions				
Project:	Lowell Street Bridge				
Location:	Lawrence, MA			Project No:	GTX-308995
Boring ID:	BB-2	Sample Type:	jar	Tested By:	jbr
Sample ID:	BB-2	Test Date:	10/25/18	Checked By:	emm
Depth :	19-21	Test Id:	478761		
Test Comment:	---				
Visual Description:	Moist, brown clay with gravel				
Sample Comment:	---				

pH of Soil by ASTM D4972

Boring ID	Sample ID	Depth	Visual Description	pH of Soil in Distilled Water	pH of Soil in Calcium Chloride
BB-2	BB-2	19-21	Moist, brown clay with gravel	7.7	7.5

Notes: Sample Preparation: screened through #10 sieve

Method A, pH meter used

printed 10/30/2018 3:18:17 PM

Client:	TRC Solutions
Project:	Lowell Street Bridge
Location:	Lowell, MA
GTX#:	308995
Test Date:	10/25/18
Tested By:	jbr
Checked By:	emm

Laboratory Measurement of Soil Resistivity Using the Wenner Four-Electrode Method by ASTM G57 (Laboratory Measurement)

Boring ID	Sample ID	Depth, ft.	Sample Description	Electrical Resistivity, ohm-cm	Electrical Conductivity, $(ohm\text{-}cm)^{-1}$
BB-2	BB-2	19-21	Moist, brown clay with gravel	1,240	8.07E-04

Notes: Test Equipment: Nilsson Model 400 Soil Resistance Meter, MC Miller Soil Box
Water added to sample to create a thick slurry prior to testing (saturated condition).
Electrical Conductivity is calculated as inverse of Electrical Resistivity (per ASTM G57)
Test conducted in standard laboratory atmosphere: 68-73 F

GeoTesting EXPRESS

Client:	TRC Solutions				
Project:	Lowell Street Bridge				
Location:	Lawrence, MA			Project No:	GTX-308995
Boring ID:	BB-1	Sample Type:	jar	Tested By:	jbr
Sample ID:	BB-1	Test Date:	10/24/18	Checked By:	emm
Depth :	7-9	Test Id:	478749		
Test Comment:	---				
Visual Description:	Moist, dark brown silty sand with gravel				
Sample Comment:	---				

Particle Size Analysis - ASTM D6913

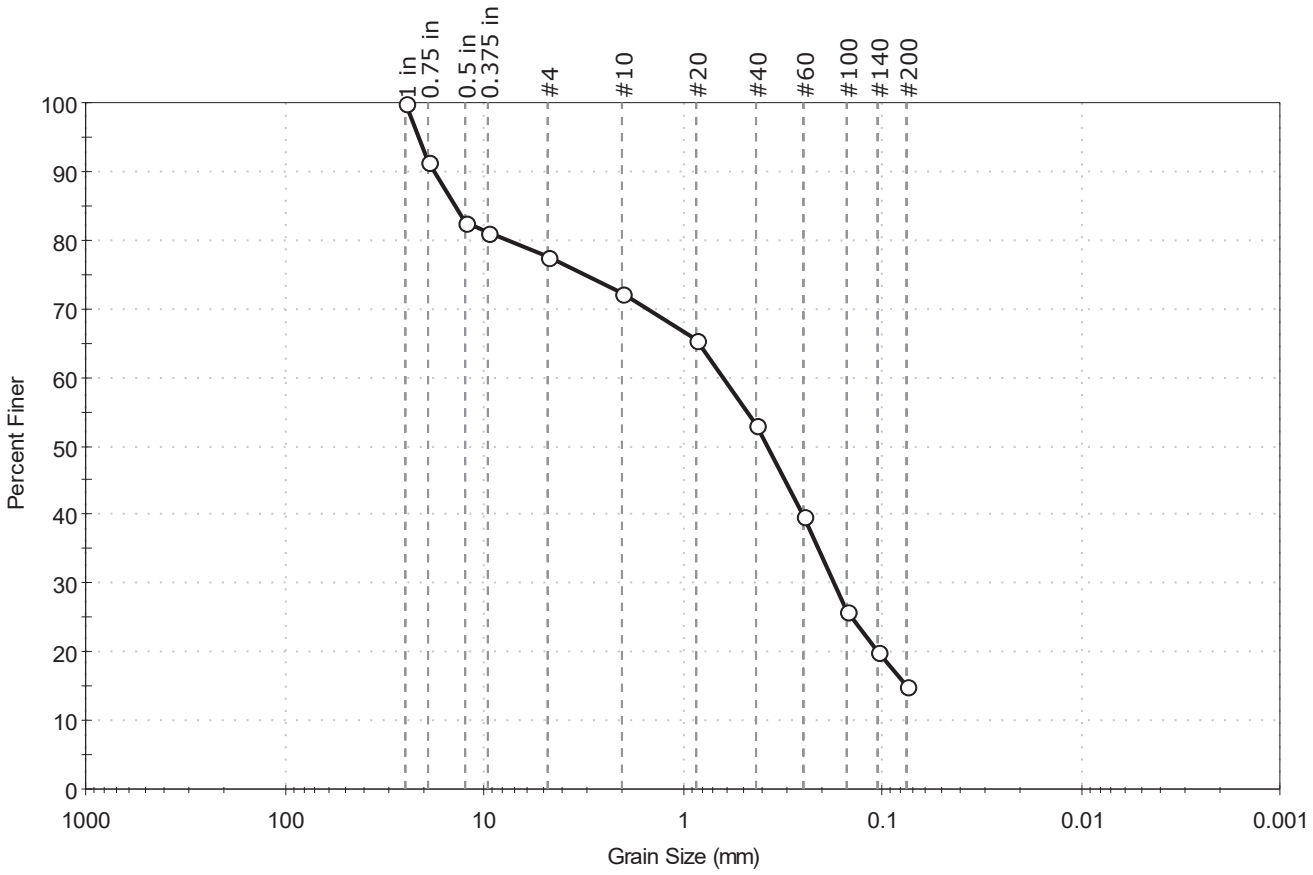

% Cobble	% Gravel	% Sand	% Silt & Clay Size
—	22.5	62.6	14.9

Sieve Name	Sieve Size, mm	Percent Finer	Spec. Percent	Complies
1 in	25.00	100		
0.75 in	19.00	91		
0.5 in	12.50	83		
0.375 in	9.50	81		
#4	4.75	78		
#10	2.00	72		
#20	0.85	65		
#40	0.42	53		
#60	0.25	40		
#100	0.15	26		
#140	0.11	20		
#200	0.075	15		

Coefficients

D_{85} = 13.9881 mm D_{30} = 0.1736 mm
D_{60} = 0.6241 mm D_{15} = 0.0753 mm
D_{50} = 0.3740 mm D_{10} = N/A
C_u = N/A C_c = N/A

Classification

ASTM N/A

AASHTO Silty Gravel and Sand (A-2-4 (0))

Sample/Test Description

Sand/Gravel Particle Shape : ANGULAR

Sand/Gravel Hardness : HARD

printed 10/25/2018 10:26:57 AM

GeoTesting EXPRESS

Client:	TRC Solutions				
Project:	Lowell Street Bridge				
Location:	Lawrence, MA			Project No:	GTX-308995
Boring ID:	BB-1	Sample Type:	jar	Tested By:	jbr
Sample ID:	BB-1	Test Date:	10/24/18	Checked By:	emm
Depth :	17-19	Test Id:	478750		
Test Comment:	---				
Visual Description:	Moist, olive brown silty sand with gravel				
Sample Comment:	---				

Particle Size Analysis - ASTM D6913

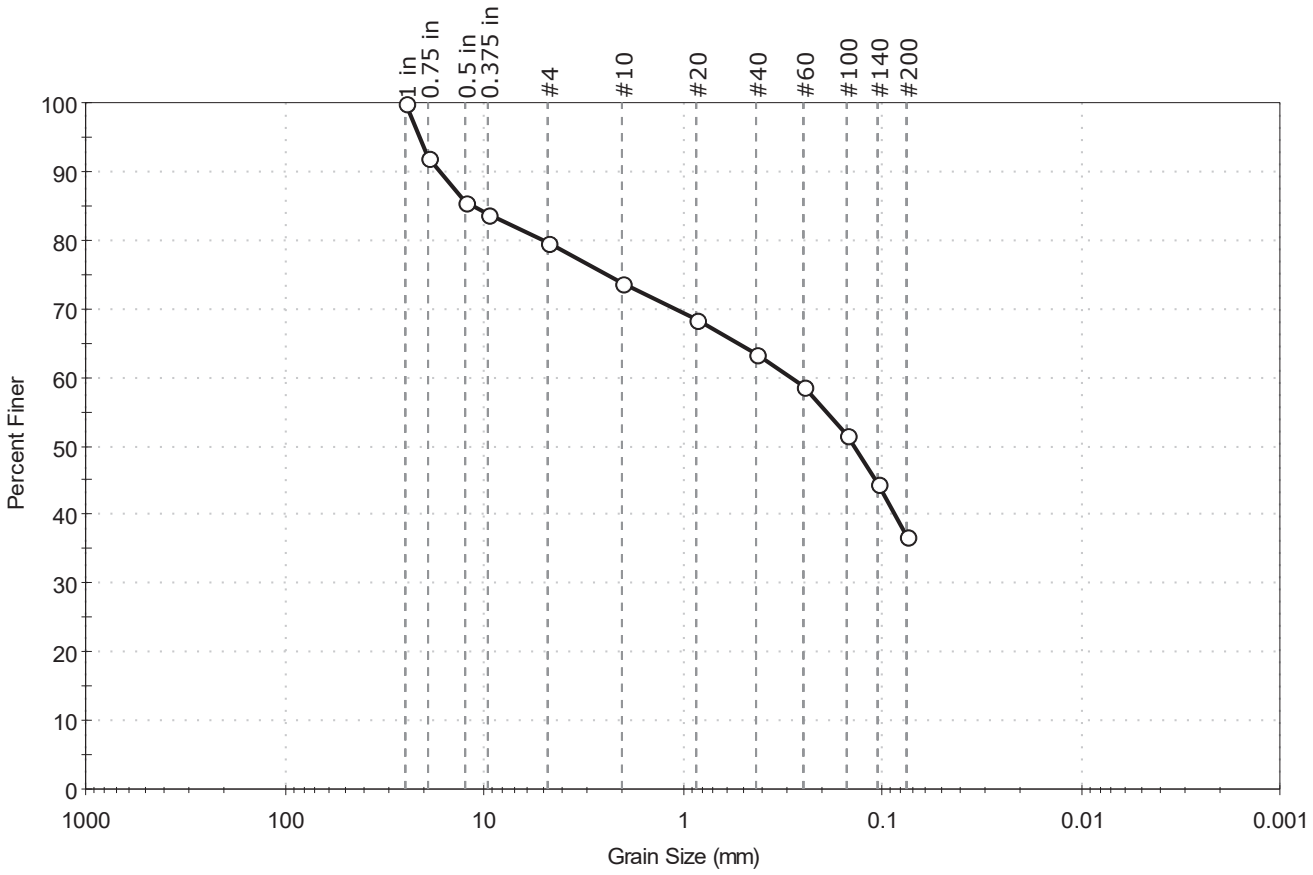

% Cobble	% Gravel	% Sand	% Silt & Clay Size
—	20.3	42.9	36.8

Sieve Name	Sieve Size, mm	Percent Finer	Spec. Percent	Complies
1 in	25.00	100		
0.75 in	19.00	92		
0.5 in	12.50	85		
0.375 in	9.50	84		
#4	4.75	80		
#10	2.00	74		
#20	0.85	68		
#40	0.42	63		
#60	0.25	59		
#100	0.15	51		
#140	0.11	44		
#200	0.075	37		

Coefficients

D_{85} = 11.6429 mm D_{30} = N/A
D_{60} = 0.2873 mm D_{15} = N/A
D_{50} = 0.1394 mm D_{10} = N/A
C_u = N/A C_c = N/A

Classification

ASTM N/A

AASHTO Silty Soils (A-4 (0))

Sample/Test Description

Sand/Gravel Particle Shape : ANGULAR

Sand/Gravel Hardness : HARD

printed 10/25/2018 10:26:58 AM

GeoTesting EXPRESS

Client:	TRC Solutions				
Project:	Lowell Street Bridge				
Location:	Lawrence, MA			Project No:	GTX-308995
Boring ID:	BB-1	Sample Type:	jar	Tested By:	jbr
Sample ID:	BB-1	Test Date:	10/24/18	Checked By:	emm
Depth :	25-27	Test Id:	478751		
Test Comment:	---				
Visual Description:	Moist, dark olive gray silty sand				
Sample Comment:	---				

Particle Size Analysis - ASTM D6913

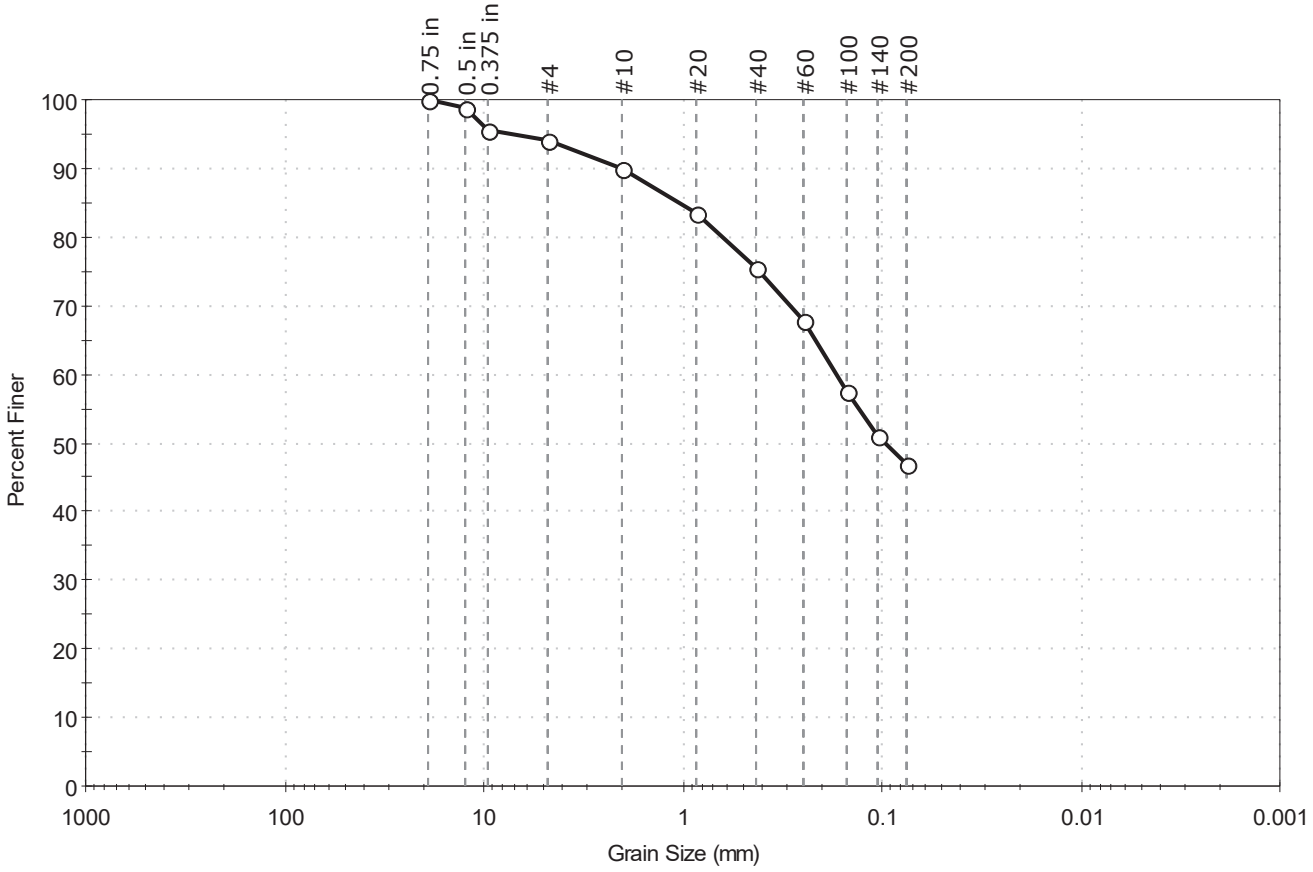

% Cobble	% Gravel	% Sand	% Silt & Clay Size
—	6.0	47.1	46.9

Sieve Name	Sieve Size, mm	Percent Finer	Spec. Percent	Complies
0.75 in	19.00	100		
0.5 in	12.50	99		
0.375 in	9.50	96		
#4	4.75	94		
#10	2.00	90		
#20	0.85	84		
#40	0.42	76		
#60	0.25	68		
#100	0.15	58		
#140	0.11	51		
#200	0.075	47		

Coefficients

D_{85} = 1.0273 mm D_{30} = N/A
D_{60} = 0.1698 mm D_{15} = N/A
D_{50} = 0.0967 mm D_{10} = N/A
C_u = N/A C_c = N/A

Classification

ASTM N/A

AASHTO Silty Soils (A-4 (0))

Sample/Test Description

Sand/Gravel Particle Shape : ANGULAR

Sand/Gravel Hardness : HARD

printed 10/25/2018 10:26:58 AM

GeoTesting EXPRESS

Client:	TRC Solutions				
Project:	Lowell Street Bridge				
Location:	Lawrence, MA			Project No:	GTX-308995
Boring ID:	BB-2	Sample Type:	jar	Tested By:	jbr
Sample ID:	BB-2	Test Date:	10/24/18	Checked By:	emm
Depth :	6-8	Test Id:	478752		
Test Comment:	---				
Visual Description:	Moist, olive gray silty sand with gravel				
Sample Comment:	---				

Particle Size Analysis - ASTM D6913

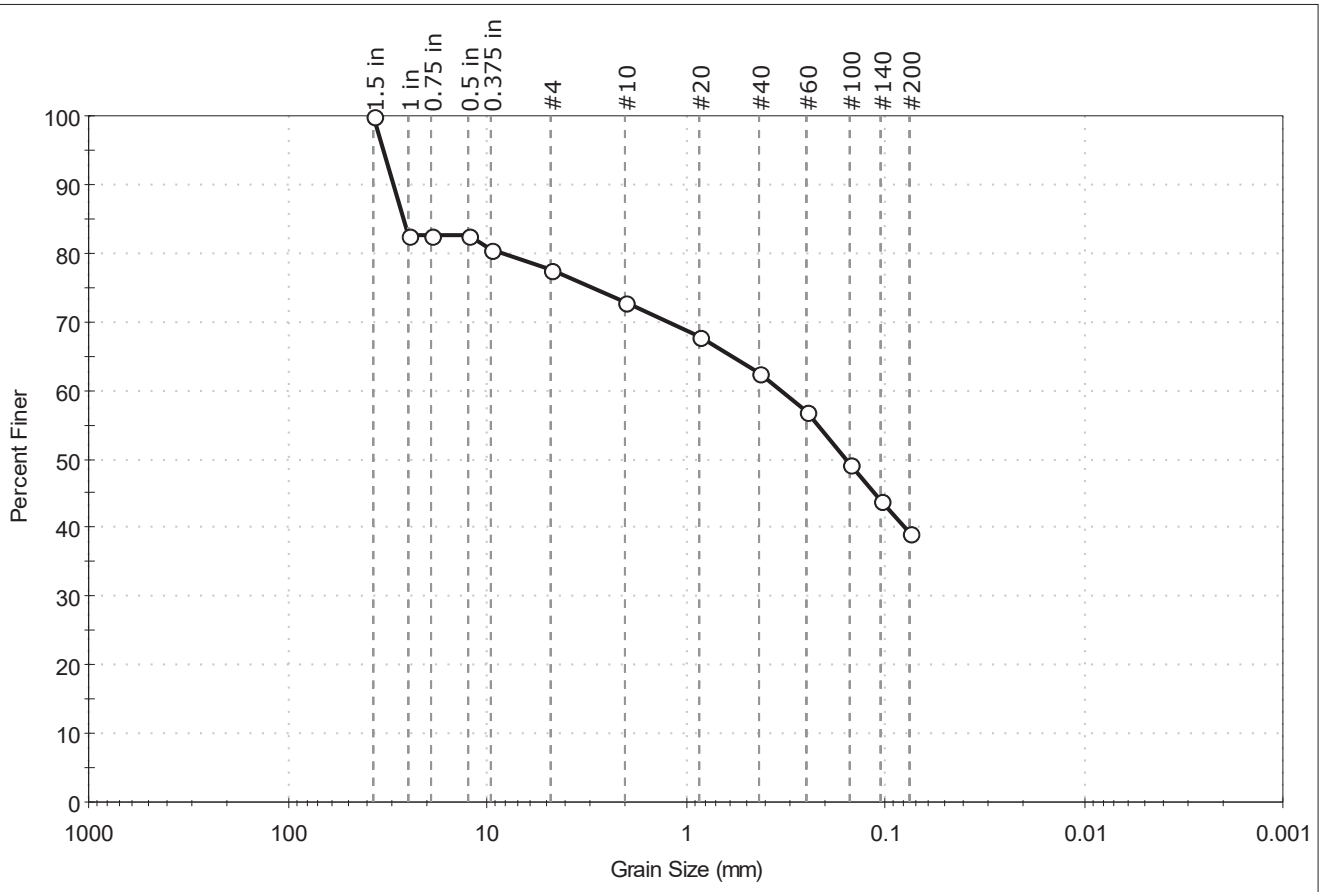

% Cobble	% Gravel	% Sand	% Silt & Clay Size
—	22.4	38.3	39.3

Sieve Name	Sieve Size, mm	Percent Finer	Spec. Percent	Complies
1.5 in	37.50	100		
1 in	25.00	83		
0.75 in	19.00	83		
0.5 in	12.50	83		
0.375 in	9.50	81		
#4	4.75	78		
#10	2.00	73		
#20	0.85	68		
#40	0.42	63		
#60	0.25	57		
#100	0.15	49		
#140	0.11	44		
#200	0.075	39		

Coefficients

D_{85} = 26.4671 mm	D_{30} = N/A
D_{60} = 0.3356 mm	D_{15} = N/A
D_{50} = 0.1590 mm	D_{10} = N/A
C_u = N/A	C_c = N/A

Classification

ASTM N/A

AASHTO Silty Soils (A-4 (0))

Sample/Test Description

Sand/Gravel Particle Shape : ANGULAR

Sand/Gravel Hardness : HARD

printed 10/30/2018 3:21:14 PM

GeoTesting EXPRESS

Client:	TRC Solutions				
Project:	Lowell Street Bridge				
Location:	Lawrence, MA			Project No:	GTX-308995
Boring ID:	BB-2	Sample Type:	jar	Tested By:	jbr
Sample ID:	BB-2	Test Date:	10/24/18	Checked By:	emm
Depth :	12-14	Test Id:	478753		
Test Comment:	---				
Visual Description:	Moist, light brown clayey sand				
Sample Comment:	---				

Particle Size Analysis - ASTM D6913

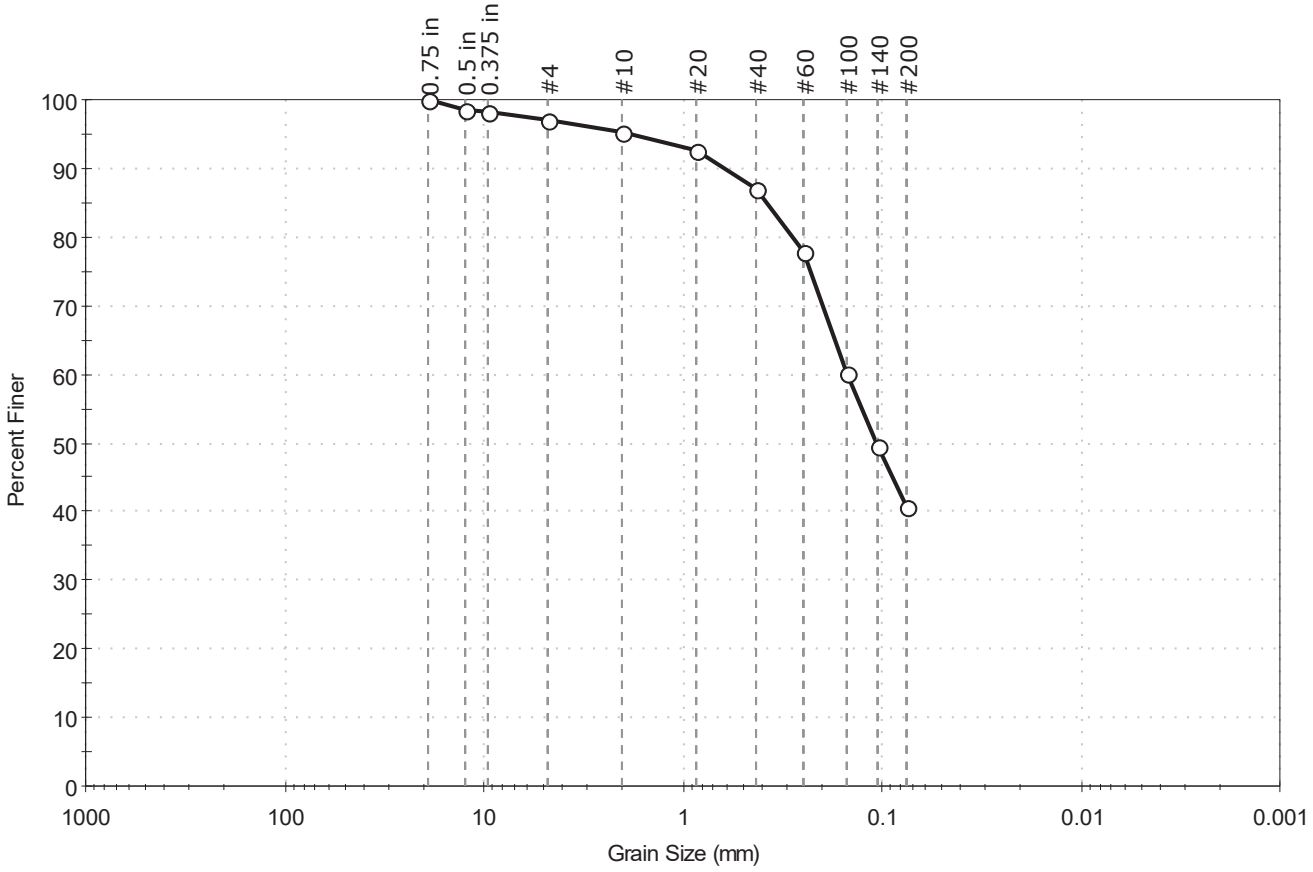

% Cobble	% Gravel	% Sand	% Silt & Clay Size
—	2.8	56.4	40.8

Sieve Name	Sieve Size, mm	Percent Finer	Spec. Percent	Complies
0.75 in	19.00	100		
0.5 in	12.50	99		
0.375 in	9.50	98		
#4	4.75	97		
#10	2.00	95		
#20	0.85	93		
#40	0.42	87		
#60	0.25	78		
#100	0.15	60		
#140	0.11	50		
#200	0.075	41		

Coefficients

D_{85} = 0.3765 mm D_{30} = N/A
D_{60} = 0.1496 mm D_{15} = N/A
D_{50} = 0.1076 mm D_{10} = N/A
C_u = N/A C_c = N/A

Classification

ASTM N/A

AASHTO Silty Soils (A-4 (0))

Sample/Test Description

Sand/Gravel Particle Shape : ---

Sand/Gravel Hardness : ---

printed 10/25/2018 10:27:00 AM

GeoTesting EXPRESS

Client:	TRC Solutions				
Project:	Lowell Street Bridge				
Location:	Lawrence, MA			Project No:	GTX-308995
Boring ID:	BB-2	Sample Type:	jar	Tested By:	jbr
Sample ID:	BB-2	Test Date:	10/24/18	Checked By:	emm
Depth :	24-26	Test Id:	478754		
Test Comment:	---				
Visual Description:	Moist, olive gray silty gravel with sand				
Sample Comment:	---				

Particle Size Analysis - ASTM D6913

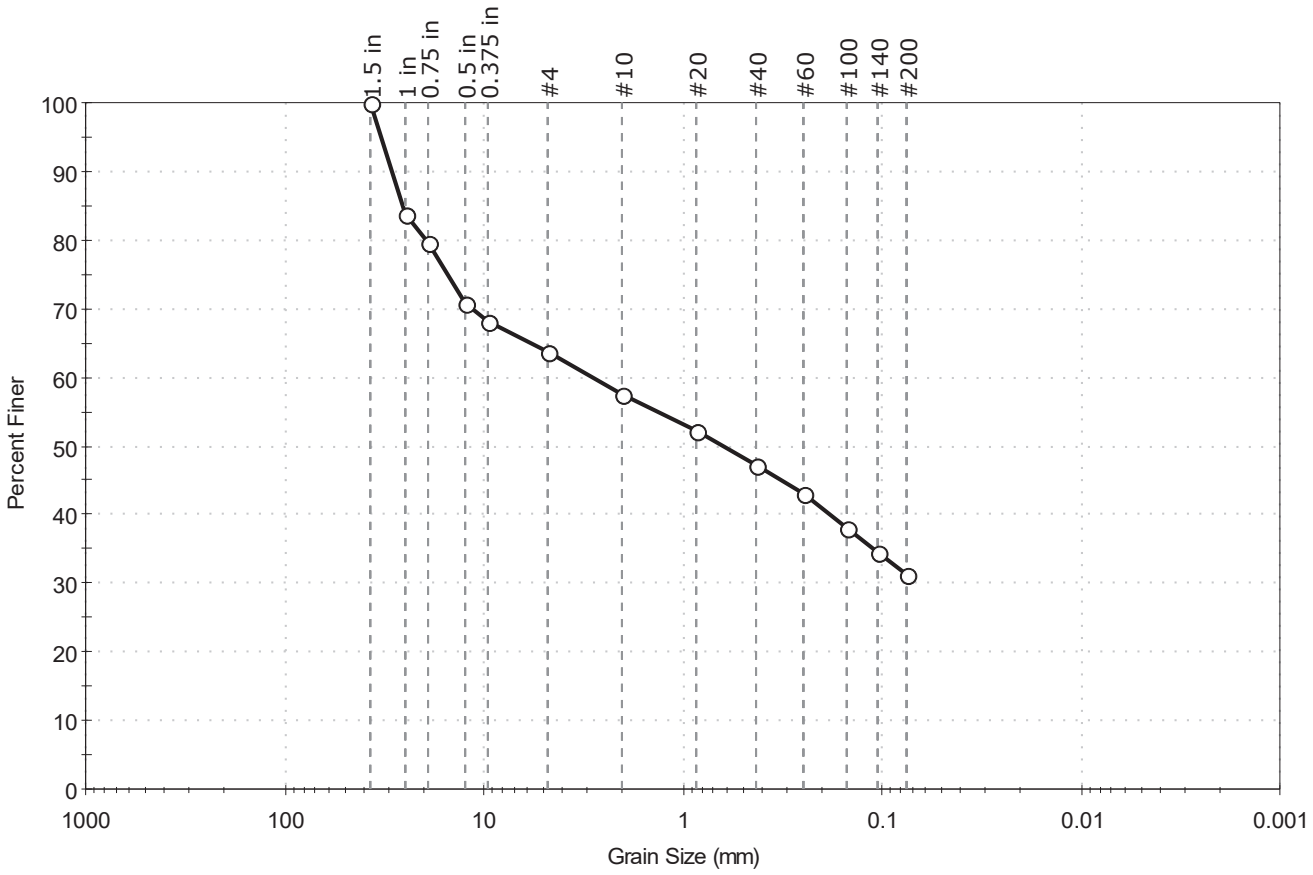

% Cobble	% Gravel	% Sand	% Silt & Clay Size
—	36.2	32.6	31.2

Sieve Name	Sieve Size, mm	Percent Finer	Spec. Percent	Complies
1.5 in	37.50	100		
1 in	25.00	84		
0.75 in	19.00	80		
0.5 in	12.50	71		
0.375 in	9.50	68		
#4	4.75	64		
#10	2.00	57		
#20	0.85	52		
#40	0.42	47		
#60	0.25	43		
#100	0.15	38		
#140	0.11	35		
#200	0.075	31		

Coefficients

D_{85} = 25.7529 mm D_{30} = N/A
D_{60} = 2.8385 mm D_{15} = N/A
D_{50} = 0.6302 mm D_{10} = N/A
C_u = N/A C_c = N/A

Classification

ASTM N/A

AASHTO Silty Gravel and Sand (A-2-4 (0))

Sample/Test Description

Sand/Gravel Particle Shape : ANGULAR

Sand/Gravel Hardness : HARD

printed 10/25/2018 10:27:01 AM

PO Box 572455 / Salt Lake City UT 84157-2455 / USA
TEL +1 801 262 2448 · FAX +1 801 262 9870 · www.TEi-TS.com

GEOTESTING EXPRESS INCORPORATED
125 NAGOG PARK
ACTON MA 01720-3451
USA

Analysis No.	TS-A1807672
Report Date	25 October 2018
Date Sampled	22 October 2018
Date Received	23 October 2018
Where Sampled	Acton, MA USA
Sampled By	Client

This is to attest that we have examined: Soil for Project Name: Lowell Street Bridge; Site Location: Lawrence, MA; Job Number: GTX-308995

When examined to the applicable requirements of:

AASHTO T-291-13	"Standard Method of Test for Determining Water-Soluble Chloride Ion Content in Soil" Method B
AASHTO T-290-16	"Standard Method of Test for Determining Water-Soluble Sulfate Ion Content in Soil"

Results:

AASHTO T-291 – Chloride Method B

Sample		Results		Detection Limit
		ppm (mg/kg)	%[1]	
BB-2		37.	0.0037	10.
BB-2	19 – 21'			

NOTE: [1]Percent by weight as received

AASHTO T-290 - Sulfate (soluble)

Sample		Results		Detection Limit
		ppm (mg/kg)	%[1]	
BB-2		<10.	<0.0010	10.
BB-2	19 – 21'			

NOTE: [1]Percent by weight as received

END OF ANALYSIS

USEPA Laboratory ID UT00930

Merrill Gee P.E. – Engineer in Charge

© 2018 by Testing Engineers International, Inc. This certificate may not be reproduced except in full, without the expressed written consent of TEi-Testing Services, LLC. Note: The values in this certificate are the values obtained under standard test conditions as reported in the appropriate Report of Test and thus may be used for purposes of demonstrating compliance or for comparison with other units tested under the same standard. The results do not indicate the function of the sample(s) under nonstandard or field conditions. This certificate gives the characteristics of the sample(s) submitted for testing only. It does not and may not be used to certify the characteristics of the product, nor to imply that the product in general meets the requirements of any standard, nor its acceptability in the marketplace. TEi-Testing Services is a wholly owned LLC of Testing Engineers International, Inc.

GeoTesting EXPRESS

SOIL CHAIN OF CUSTODY & TEST REQUEST

GeoTesting Express, Inc.
125 Nagog Park
Acton, MA 01720
800 434 1062 Toll Free
978 635 0266 Fax

2358 Perimeter Park Drive, Suite 320
Atlanta, GA 30341
770 645 6575 Tel
770 645 6570 Fax

www.geotesting.com

CLIENT		INVOICE (complete if different from Client)	
Company: TRC		Company:	
Address: 2 Liberty Square, 6th Floor		Address:	
City, State, Zip: Boston, MA, 02109		City, State, Zip:	
Contact: Suzanna Sullivan	Phone: 617-350-8639	Contact:	Phone:
E-mail: SSullivan@trcsolutions.com	Cell: 413-695-0717	E-mail:	Cell:

PROJECT		
Project Name: Lowell Street Bridge	Client Project #:	Purchase Order#:
Project Location: Lawrence, MA	GTX Quote #:	Requested Turnaround:
On-site Contact: N/A	E-mail:	Phone:

SOIL			Atterberg Limits (ASTM D 4318)	USCS – Classification (ASTM D 2487)	Grain Size (ASTM D 6913) (Sieve Only)	Grain Size (ASTM 7928) (Hydrometer)	Density (ASTM D 7263)	Moisture Content (ASTM D 2216)	Organic Content (ASTM D 2974)	pH (ASTM D 4972) please circle one (ASTM G 51)	Specific Gravity (ASTM D 854)	Electrical Resistivity please circle one (ASTM G 57) (AASHTO T 288)	Proctor Compaction (Standard – ASTM D 698) (Modified – ASTM D 1557) please circle one	California Bearing Ratio * (ASTM D 1883)	Direct Shear* (ASTM D 3080)	Triaxial Shear* (UU – ASTM D 2850) (CU – ASTM D 4767) (CD – ASTM D7181) Please circle one	Incremental Consolidation* (ASTM D 2435)	Permeability/ Hydraulic Conductivity* (Fixed Wall – ASTM D 2434) (Flexible Wall – ASTM D5084) Please circle one	Unconfined Compression (ASTM D 2166)	Other: Chloride	Other: Sulfate
Boring ID	Sample ID	Depth																			
BB-1	BB-1 (7-9)	7-9			X			X													
BB-1	BB-1 (17-19)	17-19			X			X													
BB-1	BB-1 (25-27)	25-27			X			X													
BB-2	BB-2 (6-8)	6-8			X			X													
BB-2	BB-2 (12-14)	12-14			X			X													
BB-2	BB-2 (24-26)	24-26			X			X													
* BB-2	BB-2 (19-21)	19-21								X		X								X	X

*Specify Test Conditions (Undisturbed or Remolded, Density and moisture, Test Normal Loads, Test Confining Stresses, etc.):

BB-2 (19-21) has two jars

AUTHORIZE BY SIGNING AND DATING:

SIGNATURE: Suzanna Sullivan PRINT NAME: Suzanna Sullivan DATE: 10/17/18

For GTX Use Only
Incoming Sample Inspection Performed ☐
Adverse conditions:

Relinquished By: Suzanna Sullivan	DATE: 10/17/18 TIME: 16:30	Received By: GTX	DATE: 10/17/18 TIME: 16:30
Relinquished By:	DATE: TIME:	Received By:	DATE: TIME:

A00880 - 55

Proposal No. 608930-128034

GeoTesting EXPRESS

WARRANTY and LIABILITY

GeoTesting Express (GTX) warrants that all tests it performs are run in general accordance with the specified test procedures and accepted industry practice. GTX will correct or repeat any test that does not comply with this warranty. GTX has no specific knowledge as to conditioning, origin, sampling procedure or intended use of the material.

GTX may report engineering parameters that require us to interpret the test data. Such parameters are determined using accepted engineering procedures. However, GTX does not warrant that these parameters accurately reflect the true engineering properties of the *in situ* material. Responsibility for interpretation and use of the test data and these parameters for engineering and/or construction purposes rests solely with the user and not with GTX or any of its employees.

GTX's liability will be limited to correcting or repeating a test which fails our warranty. GTX's liability for damages to the Purchaser of testing services for any cause whatsoever shall be limited to the amount GTX received for the testing services. GTX will not be liable for any damages, or for any lost benefits or other consequential damages resulting from the use of these test results, even if GTX has been advised of the possibility of such damages. GTX will not be responsible for any liability of the Purchaser to any third party.

Commonly Used Symbols

A	pore pressure parameter for $\Delta\sigma_1 - \Delta\sigma_3$
B	pore pressure parameter for $\Delta\sigma_3$
CAI	CERCHAR Abrasiveness Index
CIU	isotropically consolidated undrained triaxial shear test
CR	compression ratio for one dimensional consolidation
CSR	cyclic stress ratio
C_c	coefficient of curvature, $(D_{30})^2 / (D_{10} \times D_{60})$
C_u	coefficient of uniformity, D_{60}/D_{10}
C_c	compression index for one dimensional consolidation
C_α	coefficient of secondary compression
c_v	coefficient of consolidation
c	cohesion intercept for total stresses
c'	cohesion intercept for effective stresses
D	diameter of specimen
D	damping ratio
D_{10}	diameter at which 10% of soil is finer
D_{15}	diameter at which 15% of soil is finer
D_{30}	diameter at which 30% of soil is finer
D_{50}	diameter at which 50% of soil is finer
D_{60}	diameter at which 60% of soil is finer
D_{85}	diameter at which 85% of soil is finer
d_{50}	displacement for 50% consolidation
d_{90}	displacement for 90% consolidation
d_{100}	displacement for 100% consolidation
E	Young's modulus
e	void ratio
e_c	void ratio after consolidation
e_o	initial void ratio
G	shear modulus
G_s	specific gravity of soil particles
H	height of specimen
H_R	Rebound Hardness number
i	gradient
I_S	Uncorrected point load strength
$I_{S(50)}$	Size corrected point load strength index
H_A	Modified Taber Abrasion
H_T	Total hardness
K_o	lateral stress ratio for one dimensional strain
k	permeability
LI	Liquidity Index
m_v	coefficient of volume change
n	porosity
PI	plasticity index
P_c	preconsolidation pressure
p	$(\sigma_1 + \sigma_3) / 2$, $(\sigma_v + \sigma_h) / 2$
p'	$(\sigma'_1 + \sigma'_3) / 2$, $(\sigma'_v + \sigma'_h) / 2$
p'_c	p' at consolidation
Q	quantity of flow
q	$(\sigma_1 - \sigma_3) / 2$
q_f	q at failure
q_o, q_i	initial q
q_c	q at consolidation
S_r	Post cyclic undrained shear strength
T	temperature
t	time
U, UC	unconfined compression test
UU, Q	unconsolidated undrained triaxial test
u_a	pore gas pressure
u_e	excess pore water pressure
u, u_w	pore water pressure
V	total volume
V_g	volume of gas
V_s	volume of solids
V_s	shear wave velocity
V_v	volume of voids
V_w	volume of water
V_o	initial volume
v	velocity
W	total weight
W_s	weight of solids
W_w	weight of water
w	water content
w_c	water content at consolidation
w_f	final water content
w_l	liquid limit
w_n	natural water content
w_p	plastic limit
w_s	shrinkage limit
w_o, w_i	initial water content
α	slope of q_f versus p_f
α'	slope of q_f versus p_f'
γ_t	total unit weight
γ_d	dry unit weight
γ_s	unit weight of solids
γ_w	unit weight of water
ε	strain
ε_{vol}	volume strain
ε_h, ε_v	horizontal strain, vertical strain
μ	Poisson's ratio, also viscosity
σ	normal stress
σ'	effective normal stress
σ_c, σ'_c	consolidation stress in isotropic stress system
σ_h, σ'_h	horizontal normal stress
σ_v, σ'_v	vertical normal stress
σ'_{vc}	Effective vertical consolidation stress
σ_1	major principal stress
σ_2	intermediate principal stress
σ_3	minor principal stress
τ	shear stress
φ	friction angle based on total stresses
φ'	friction angle based on effective stresses
φ'_r	residual friction angle
φ_{ult}	φ for ultimate strength

GeoTesting EXPRESS

Technologies to manage risk for infrastructure

Boston
Atlanta
Chicago
Los Angeles
New York
www.geotesting.com

Transmittal

TO:

Gregory Mischel

TRC Solutions

650 Suffolk Street

Lowell, MA 01854

DATE: 2/18/2019	GTX NO: 308995
RE: Lowell Street Bridge	

COPIES	DATE	DESCRIPTION
	2/18/2019	**February 2019 Laboratory Test Report**

REMARKS:

SIGNED:

Jonathan Campbell, Assistant Laboratory Manager

CC:

APPROVED BY:

Mark Dobday, P.G., Laboratory Manager

GeoTesting EXPRESS

Technologies to manage risk for infrastructure

Boston
Atlanta
Chicago
Los Angeles
New York
www.geotesting.com

February 18, 2019

Gregory Mischel
TRC Solutions
650 Suffolk Street
Lowell, MA 01854

RE: Lowell Street Bridge, Lawrence, MA (GTX-308995)

Dear Gregory:

Enclosed are the test results you requested for the above referenced project. GeoTesting Express, Inc. (GTX) received one sample from you on 1/28/2019. This sample was labeled as follows:

Sample Number	Depth
BB-2	92 ft

GTX performed the following test on this sample:

ASTM D7012 Method C- Uniaxial Compressive Strength of Rock

A copy of your test request is attached.

The results presented in this report apply only to the items tested. This report shall not be reproduced except in full, without written approval from GeoTesting Express. The remainder of these samples will be retained for a period of sixty (60) days and will then be discarded unless otherwise notified by you. Please call me if you have any questions or require additional information. Thank you for allowing GeoTesting Express the opportunity of providing you with testing services. We look forward to working with you again in the future.

Respectfully yours,

Jonathan Campbell
Assistant Laboratory Manager

GeoTesting EXPRESS

Technologies to manage risk for infrastructure

Boston
Atlanta
Chicago
Los Angeles
New York
www.geotesting.com

Geotechnical Test Report 2/18/2019

GTX-308995

Lowell Street Bridge

Lawrence, MA

Client Project No.: 297487

Prepared for:

TRC Solutions

GeoTesting EXPRESS

Client:	TRC Solutions				
Project:	Lowell Street Bridge				
Location:	Lawrence, MA			Project No:	GTX-308995
Boring ID:	---	Sample Type:	---	Tested By:	smd
Sample ID:	BB-2	Test Date:	01/29/19	Checked By:	jsc
Depth :	92 ft	Test Id:	491008		
Test Comment:	---				
Visual Description:	See photograph(s)				
Sample Comment:	---				

Bulk Density and Compressive Strength of Rock Core Specimens by ASTM D7012 Method C

Boring ID	Sample Number	Depth	Bulk Density, pcf	Compressive strength, psi	Failure Type	Meets ASTM D4543	Note(s)
---	BB-2	92.10-92.47	168	16941	1	Yes	---

Notes: Density determined on core samples by measuring dimensions and weight and then calculating.

All specimens tested at the approximate as-received moisture content and at standard laboratory temperature.

The axial load was applied continuously at a stress rate that produced failure in a test time between 2 and 15 minutes.

Failure Type: 1 = Intact Material Failure; 2 = Discontinuity Failure; 3 = Intact Material and Discontinuity Failure (See attached photographs)

printed 1/31/2019 12:15:55 PM

Client:	TRC Solutions	Test Date:	1/29/2019
Project Name:	Lowell Street Bridge	Tested By:	cmh
Project Location:	Lawrence, MA	Checked By:	jsc
GTX #:	308995		
Boring ID:	---		
Sample ID:	BB-2		
Depth:	92.10-92.47 ft		
Visual Description:	See photographs		

UNIT WEIGHT DETERMINATION AND DIMENSIONAL AND SHAPE TOLERANCES OF ROCK CORE SPECIMENS BY ASTM D4543

BULK DENSITY

	1	2	Average
Specimen Length, in:	4.60	4.60	4.60
Specimen Diameter, in:	1.99	1.99	1.99
Specimen Mass, g:	630.9		
Bulk Density, lb/ft^3	168	**Minimum Diameter Tolerence Met?**	**YES**
Length to Diameter Ratio:	2.3	**Length to Diameter Ratio Tolerance Met?**	**YES**

DEVIATION FROM STRAIGHTNESS (Procedure S1)

Maximum gap between side of core and reference surface plate:
Is the maximum gap ≤ 0.02 in.? YES

Maximum difference must be < 0.020 in.
Straightness Tolerance Met? **YES**

END FLATNESS AND PARALLELISM (Procedure FP1)

END 1	-0.875	-0.750	-0.625	-0.500	-0.375	-0.250	-0.125	0.000	0.125	0.250	0.375	0.500	0.625	0.750	0.875
Diameter 1, in	-0.00010	0.00000	0.00000	0.00000	0.00020	0.00020	0.00010	0.00000	0.00000	0.00000	0.00000	0.00000	0.00000	-0.00010	-0.00010
Diameter 2, in (rotated 90°)	0.00040	0.00040	0.00040	0.00030	0.00030	0.00010	0.00010	0.00000	-0.00020	-0.00040	-0.00040	-0.00050	-0.00060	-0.00080	-0.00080

Difference between max and min readings, in:
0° = 0.00030 90° = 0.00120

END 2	-0.875	-0.750	-0.625	-0.500	-0.375	-0.250	-0.125	0.000	0.125	0.250	0.375	0.500	0.625	0.750	0.875
Diameter 1, in	0.00010	0.00010	0.00010	0.00010	0.00010	0.00000	0.00000	0.00000	0.00000	0.00010	0.00000	0.00000	0.00000	-0.00010	-0.00010
Diameter 2, in (rotated 90°)	0.00060	0.00050	0.00040	0.00030	0.00020	0.00020	0.00010	0.00000	0.00000	0.00000	-0.00010	-0.00040	-0.00060	-0.00070	-0.00080

Difference between max and min readings, in:
0° = 0.0002 90° = 0.0014

Maximum difference must be < 0.0020 in. Difference = ± 0.00070
Flatness Tolerance Met? **YES**

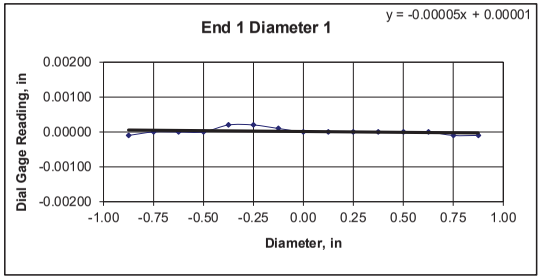

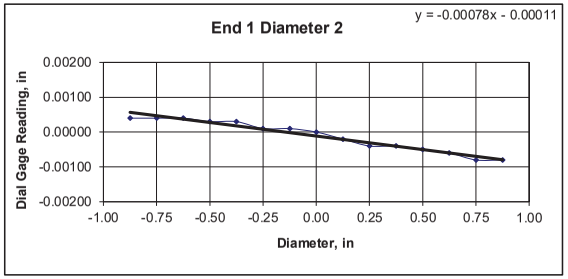

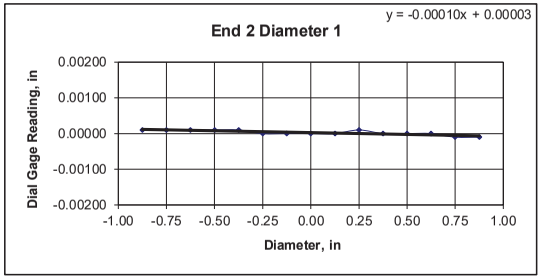

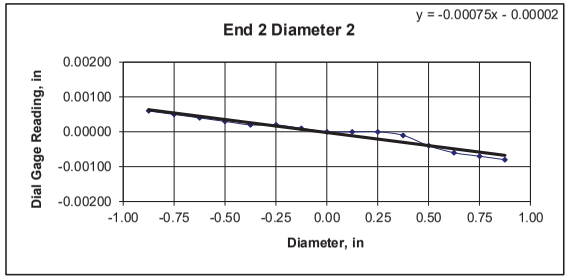

DIAMETER 1

End 1:
Slope of Best Fit Line 0.00005
Angle of Best Fit Line: 0.00278

End 2:
Slope of Best Fit Line 0.00010
Angle of Best Fit Line: 0.00589

Maximum Angular Difference: 0.00311

Parallelism Tolerance Met? **YES**
Spherically Seated

DIAMETER 2

End 1:
Slope of Best Fit Line 0.00078
Angle of Best Fit Line: 0.04453

End 2:
Slope of Best Fit Line 0.00075
Angle of Best Fit Line: 0.04289

Maximum Angular Difference: 0.00164

Parallelism Tolerance Met? **YES**
Spherically Seated

PERPENDICULARITY (Procedure P1) (Calculated from End Flatness and Parallelism measurements above)

END 1	Difference, Maximum and Minimum (in.)	Diameter (in.)	Slope	Angle°	Perpendicularity Tolerance Met?
Diameter 1, in	0.00030	1.990	0.00015	0.009	YES
Diameter 2, in (rotated 90°)	0.00120	1.990	0.00060	0.035	YES
END 2					
Diameter 1, in	0.00020	1.990	0.00010	0.006	YES
Diameter 2, in (rotated 90°)	0.00140	1.990	0.00070	0.040	YES

Maximum angle of departure must be ≤ 0.25°
Perpendicularity Tolerance Met? **YES**

Client:	TRC Solutions
Project Name:	Lowell Street Bridge
Project Location:	Lawrence, MA
GTX #:	308995
Test Date:	1/29/2019
Tested By:	jck/cmh
Checked By:	jsc
Boring ID:	BB-2
Sample ID:	---
Depth, ft:	92.10-92.47

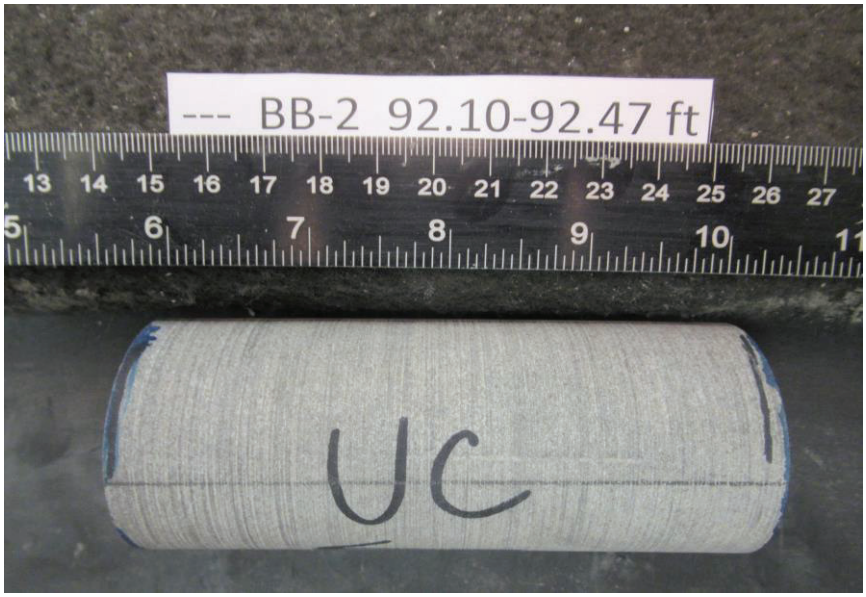

After cutting and grinding

After break

CHAIN OF CUSTODY

GeoTesting EXPRESS

GeoTesting Express, Inc.
125 Nagog Park
Acton, MA 01720
800-434-1062 Toll Free
978-635-0424 Phone
978-635-0266 Fax

Sales Order No.:
GTX No.:

Company Name: TRC

Address: 650 Suffolk Street
Lowell, MA 01854

Contact: Greg Mischel
e-mail: gmischel@trcsolutions.com
Phone Number: 978-656-3675
Fax Number:

Project Name: Lowell St. Bridge
Project Number: 297487
Project Location: Lawrence, MA

Sample Type	Container Type
1. Soil	1. Bucket
2. Geosynthetic	2. Bag
3. Rock	3. Jar
4. Concrete	4. Tube
5. Other	5. Roll

Sample Identification	Container Size	Container Type	Sampling Date	Sampling Time	Sample Type	Analysis: Unconfined Compression	Comments
BB-2 (92')	NA	NA			3	X	

Relinquished By:	Date: 1/28/19	**Received By:**	Date: 1/28/19	**Turn-Around Time Requested:**
	Time: 3:24		Time: 3:24	
Relinquished By:	Date:	**Received By:**	Date:	No. of Business Days: 5-day
	Time:		Time:	
Relinquished By:	Date:	**Received By:**	Date:	**Special Instructions:**
	Time:		Time:	
SHIPPED VIA:				

A00880 - 63

Proposal No. 608930-128034

GeoTesting EXPRESS

WARRANTY and LIABILITY

GeoTesting Express (GTX) warrants that all tests it performs are run in general accordance with the specified test procedures and accepted industry practice. GTX will correct or repeat any test that does not comply with this warranty. GTX has no specific knowledge as to conditioning, origin, sampling procedure or intended use of the material.

GTX may report engineering parameters that require us to interpret the test data. Such parameters are determined using accepted engineering procedures. However, GTX does not warrant that these parameters accurately reflect the true engineering properties of the *in situ* material. Responsibility for interpretation and use of the test data and these parameters for engineering and/or construction purposes rests solely with the user and not with GTX or any of its employees.

GTX's liability will be limited to correcting or repeating a test which fails our warranty. GTX's liability for damages to the Purchaser of testing services for any cause whatsoever shall be limited to the amount GTX received for the testing services. GTX will not be liable for any damages, or for any lost benefits or other consequential damages resulting from the use of these test results, even if GTX has been advised of the possibility of such damages. GTX will not be responsible for any liability of the Purchaser to any third party.

Commonly Used Symbols

A	pore pressure parameter for $\Delta\sigma_1 - \Delta\sigma_3$
B	pore pressure parameter for $\Delta\sigma_3$
CAI	CERCHAR Abrasiveness Index
CIU	isotropically consolidated undrained triaxial shear test
CR	compression ratio for one dimensional consolidation
CSR	cyclic stress ratio
C_c	coefficient of curvature, $(D_{30})^2 / (D_{10} \times D_{60})$
C_u	coefficient of uniformity, D_{60}/D_{10}
C_c	compression index for one dimensional consolidation
C_α	coefficient of secondary compression
c_v	coefficient of consolidation
c	cohesion intercept for total stresses
c'	cohesion intercept for effective stresses
D	diameter of specimen
D	damping ratio
D_{10}	diameter at which 10% of soil is finer
D_{15}	diameter at which 15% of soil is finer
D_{30}	diameter at which 30% of soil is finer
D_{50}	diameter at which 50% of soil is finer
D_{60}	diameter at which 60% of soil is finer
D_{85}	diameter at which 85% of soil is finer
d_{50}	displacement for 50% consolidation
d_{90}	displacement for 90% consolidation
d_{100}	displacement for 100% consolidation
E	Young's modulus
e	void ratio
e_c	void ratio after consolidation
e_o	initial void ratio
G	shear modulus
G_s	specific gravity of soil particles
H	height of specimen
H_R	Rebound Hardness number
i	gradient
I_S	Uncorrected point load strength
$I_{S(50)}$	Size corrected point load strength index
H_A	Modified Taber Abrasion
H_T	Total hardness
K_o	lateral stress ratio for one dimensional strain
k	permeability
LI	Liquidity Index
m_v	coefficient of volume change
n	porosity
PI	plasticity index
P_c	preconsolidation pressure
p	$(\sigma_1 + \sigma_3) / 2$, $(\sigma_v + \sigma_h) / 2$
p'	$(\sigma'_1 + \sigma'_3) / 2$, $(\sigma'_v + \sigma'_h) / 2$
p'_c	p' at consolidation
Q	quantity of flow
q	$(\sigma_1 - \sigma_3) / 2$
q_f	q at failure
q_o, q_i	initial q
q_c	q at consolidation
S_r	Post cyclic undrained shear strength
T	temperature
t	time
U, UC	unconfined compression test
UU, Q	unconsolidated undrained triaxial test
u_a	pore gas pressure
u_e	excess pore water pressure
u, u_w	pore water pressure
V	total volume
V_g	volume of gas
V_s	volume of solids
V_s	shear wave velocity
V_v	volume of voids
V_w	volume of water
V_o	initial volume
v	velocity
W	total weight
W_s	weight of solids
W_w	weight of water
w	water content
w_c	water content at consolidation
w_f	final water content
w_l	liquid limit
w_n	natural water content
w_p	plastic limit
w_s	shrinkage limit
w_o, w_i	initial water content
α	slope of q_f versus p_f
α'	slope of q_f versus p_f'
γ_t	total unit weight
γ_d	dry unit weight
γ_s	unit weight of solids
γ_w	unit weight of water
ε	strain
ε_{vol}	volume strain
ε_h, ε_v	horizontal strain, vertical strain
μ	Poisson's ratio, also viscosity
σ	normal stress
σ'	effective normal stress
σ_c, σ'_c	consolidation stress in isotropic stress system
σ_h, σ'_h	horizontal normal stress
σ_v, σ'_v	vertical normal stress
σ'_{vc}	Effective vertical consolidation stress
σ_1	major principal stress
σ_2	intermediate principal stress
σ_3	minor principal stress
τ	shear stress
φ	friction angle based on total stresses
φ'	friction angle based on effective stresses
φ'_r	residual friction angle
φ_{ult}	φ for ultimate strength

Appendix D
Geotechnical Analysis Calculations

Calculation of N Bar Values

Objective: Calculate N Bar values for soils underlying Site.

Approach: Use Method B described in AASHTO LRFD Seismic Bridge Design (2011) Article 3.4.2.2 to determine site-specific N Bar values.

References:
1. Castle, R.O. 1958. Surficial geology of the Lawrence quad¬rangle, Massachusetts-New Hampshire: U.S. Geological Survey Geologic Quadrangle Map GQ–107, scale 1:31,680 https://pubs.er.usgs.gov/publication/.
3. AASHTO. 2011. AASHTO Guide Specifications for LRFD Seismic Bridge Design, 2nd Edition, with interim revisions

Assumptions:
1. Soils encountered in borings TRC-BB-1, TRC-BB-2, MassDOT BB-1, and MassDOT BB-2 were considered representative of soils beneath the East and West Abutment foundations.
2. In the TRC borings, soils underlying the abutment foundation begin approximately 20 feet bgs because these borings were drilled from Lowell Street and not from the rail bed.
3. In the MassDOT borings, soils underlying the abutment foundation begin approximately 4 feet bgs because these borings were drilled from the rail bed.

Methodology: Use Method B for cohesionless soils to determine N Bar (Equation 3.4.2.2-2). Specifically,

$$\overline{N} = \frac{\sum_{i=1}^{n} d_i}{\sum_{i=1}^{n} \frac{d_i}{N_i}}$$

Where:

d_i = Soil layer thickness d_i (ft.) defined by the limits shown in the soil description column on the boring logs rather than considering each individual test sample as a discrete layer.

N_i = Field SPT N value within soil layer thickness d_i; however, the SPT N value from an individual soil sample shall not be taken as greater than 100 blows/ft.

Procedure: List blow counts and respresentative soil thicknesses for both borings.

Note: *Blue highlighted blow counts indicate an N value >100 that was set equal to 100.*

West Abutment

Boring	Soil Layer	Blow Count (N)	Blow Count used (N_i)	Thickness (d_i, feet)	d_i/N_i	$\sum_{i=1}^{n} d_i$	$\overline{\sum_{i=1}^{n} \frac{d_i}{N_i}}$	N Bar
TRC-BB-1	Fill	8	8	3	0.375	100.00	4.67	**21.4**
	Fill	11	11	2	0.182			
	Fill	2	2	2	1.000			
	Fill	2	2	2	1.000			
	Fill	3	3	2	0.667			
	Fill	11	11	2	0.182			
	Fill	11	11	4	0.364			
	Fill	49	49	7	0.143			
	Glacial Till	117	100	9	0.090			
	Glacial Till	120	100	5	0.050			
	Glacial Till	112	100	5	0.050			
	Glacial Till	133	100	5	0.050			
	Glacial Till	150	100	5	0.050			
	Glacial Till	150	100	5	0.050			
	Glacial Till	105	100	5	0.050			
	Glacial Till	147	100	5	0.050			
	Glacial Till	102	100	5	0.050			
	Glacial Till	150	100	5	0.050			
	Glacial Till	150	100	5	0.050			
	Glacial Till	150	100	5	0.050			
	Glacial Till	148	100	5	0.050			
	Glacial Till	150	100	5	0.050			
	Glacial Till	150	100	2	0.020			

TRC

Lowell Street Bridge - SPT N-value Calculations
Lawrence, MA PN: 274047

Calculation of N Bar Values

	Boring	Soil Layer	Blow Count (N)	Blow Count used (N_i)	Thickness (d_i, feet)	d_i/N_i	$\sum_{i=1}^{n} d_i$	$\sum_{i=1}^{n} \frac{d_i}{N_i}$	N Bar
	MassDOT BB-1	Glacial Till	26	26	5	0.192	100.00	1.23	**81.6**
		Glacial Till	80	80	5	0.063			
		Glacial Till	56	56	5	0.089			
		Glacial Till	61	61	5	0.082			
		Glacial Till	100	100	5	0.050			
		Glacial Till	100	100	5	0.050			
		Glacial Till	100	100	5	0.050			
		Glacial Till	100	100	5	0.050			
		Glacial Till	100	100	5	0.050			
		Glacial Till	100	100	5	0.050			
		Glacial Till	100	100	5	0.050			
		Glacial Till	100	100	5	0.050			
		Glacial Till	100	100	5	0.050			
		Glacial Till	100	100	5	0.050			
		Glacial Till	100	100	5	0.050			
	<wt. aver. [1] >	Glacial Till	100	100	20	0.200			

East Abutment	Boring	Soil Layer	Blow Count (N)	Blow Count used (N_i)	Thickness (d_i, feet)	d_i/N_i	$\sum_{i=1}^{n} d_i$	$\sum_{i=1}^{n} \frac{d_i}{N_i}$	N Bar
	TRC-BB-2	Fill	47	47	2	0.043	100.00	1.92	**52.0**
		Fill	17	17	2	0.118			
		Fill	7	7	2	0.286			
		Fill	11	11	2	0.182			
		Fill	13	13	2	0.154			
		Fill	40	40	5	0.125			
		Glacial Till	100	100	5	0.050			
		Glacial Till	100	100	5	0.050			
		Glacial Till	100	100	5	0.050			
		Glacial Till	66	66	5	0.076			
		Glacial Till	100	100	5	0.050			
		Glacial Till	100	100	5	0.050			
		Glacial Till	100	100	5	0.050			
		Glacial Till	100	100	5	0.050			
		Glacial Till	100	100	5	0.050			
		Glacial Till	100	100	5	0.050			
		Glacial Till	100	100	5	0.050			
		Glacial Till	100	100	7	0.070			
	<wt. aver. [1] >	Glacial Till	100	100	23	0.230			

	Boring	Soil Layer	Blow Count (N)	Blow Count used (N_i)	Thickness (d_i, feet)	d_i/N_i	$\sum_{i=1}^{n} d_i$	$\sum_{i=1}^{n} \frac{d_i}{N_i}$	N Bar
	MassDOT BB-2	Glacial Till	55	55	5	0.091	100.00	1.05	**94.9**
		Glacial Till	100	100	5	0.050			
		Glacial Till	100	100	5	0.050			
		Glacial Till	80	80	5	0.063			
		Glacial Till	100	100	5	0.050			
		Glacial Till	100	100	5	0.050			
		Glacial Till	100	100	5	0.050			
		Glacial Till	100	100	5	0.050			
		Glacial Till	100	100	5	0.050			
		Glacial Till	100	100	5	0.050			
		Glacial Till	100	100	5	0.050			
		Glacial Till	100	100	5	0.050			
		Glacial Till	100	100	5	0.050			
		Glacial Till	100	100	0.5	0.005			
	<wt. aver. [1] >	Glacial Till	100	100	34.5	0.345			

Notes: 1. Wt. Aver. = weighted average of blow counts in the soil layer assumed to be representative of the N values extending to a depth of 100 feet.

Results: **Based on the borings advanced by TRC and MassDOT, the N Bar values for the site are in the range of 21 to 95.**

Calculation of $N_{1,60}$ Values

Objective: Calculate N values (i.e., SPT blows per foot) for site soils normalized for overburden stress and hammer energy.

Approach: Use AASHTO methodology to determine the site-specific normalized N values.

References: 1. AASHTO LRFD Bridge Design Specifications, 9th Edition (2020) Section 10.4.6.2.4 (page 10-16 et seq.)

Assumptions:
1. Soils encountered in borings TRC-BB-1, TRC-BB-2, MassDOT BB-1, and MassDOT BB-2 were considered representative of soils beneath the East and West Abutment foundations.
2. In the TRC borings, soils underlying the abutment foundation begin approximately 20 feet bgs because these borings were drilled from Lowell Street and not from the rail bed.
3. In the MassDOT borings, soils underlying the abutment foundation begin approximately 4 feet bgs because these borings were drilled from the rail bed.
4. The normalized SPT N value from an individual soil sample shall not be taken as greater than 100 blows/ft.
5. Soil properties are summarized below.

Property	Existing Fill (Soil Layer 1)	Proposed Structural Fill (Soil Layer 2)	Glacial Till (Soil Layer 3)
Dry Unit Weight, γ_d (pcf)	100	115	130
Moist Unit Weight, γ_m (pcf)	105	120	135
Saturated Unit Weight, γ_{sat} (pcf)	120	125	140

Methodology:
N values normalized for overburden stress = $N_1 = C_N * N$
N values normalized for hammer energy = N_{60} = (ER/60%)
N values normalized for stress and energy = $N_{1,60}$
$N_{1,60}$ = $(C_N * N) * (ER/60\%)$
Where:
C_N = $(0.77 * \log_{10}(40/\sigma'_v))$ and $C_N < 2.0$
σ'_v = Vertical Effective Stress, ksf
N = SPT N value recorded in field.
ER = Hammer efficiency expressed as percentage of theoretical free fall energy delivered by hammer used.
TRC borings - SPT used automatic hammer, so ER = 80%
MassDOT borings - SPT used safety hammer, so ER = 60%

Procedure: Calculate normalized N values using respresentative soil thicknesses for each sample and the soil properties.
Note: *highlighted blow counts indicate an N value >100 that was set equal to 100*

Boring TRC-BB-1 Depth to GWT = 18 feet bgs

Sample	Soil Layer	Mid-point Depth (feet bgs)	Blow Counts (N)	γ_m (pcf)	γ_{sat} (pcf)	σ'_v (ksf)	C_N	N_1	N_{60}	$N_{1,60}$	Design $N_{1,60}$	Average Design $N_{1,60}$
SS-1	1	2	8	105	120	0.21	1.76	14	11	19	19	**Fill**
SS-2	1	4	11	105	120	0.42	1.52	17	15	22	22	**12**
SS-3	1	6	2	105	120	0.63	1.39	3	3	4	4	
SS-4	1	8	2	105	120	0.84	1.29	3	3	3	3	
SS-5	1	10	3	105	120	1.05	1.22	4	4	5	5	
SS-6	1	12	11	105	120	1.26	1.16	13	15	17	17	
SS-7	1	16	11	105	120	1.68	1.06	12	15	16	16	
SS-8	3	18	49	135	140	1.96	1.01	49	65	66	66	**Glacial Till**
SS-9	3	26	117	135	140	3.08	0.86	100	156	134	100	**89**
SS-10	3	29.5	120	135	140	3.57	0.81	97	160	129	100	
SS-11	3	35	112	135	140	4.34	0.74	83	149	111	100	
SS-12	3	40	133	135	140	5.04	0.69	92	177	123	100	
SS-13	3	45	150	135	140	5.74	0.65	97	200	130	100	
SS-14	3	50	150	135	140	6.44	0.61	92	200	122	100	
SS-15	3	55	105	135	140	7.14	0.58	61	140	81	81	
SS-16	3	60	147	135	140	7.84	0.54	80	196	107	100	
SS-17	3	65	102	135	140	8.54	0.52	53	136	70	70	
SS-18	3	70	150	135	140	9.24	0.49	74	200	98	98	
SS-19	3	75	150	135	140	9.94	0.47	70	200	93	93	
SS-20	3	80	150	135	140	10.64	0.44	66	200	89	89	
SS-21	3	85	148	135	140	11.34	0.42	62	197	83	83	
SS-22	3	90	150	135	140	12.04	0.40	60	200	80	80	
SS-23	3	95	150	135	140	12.74	0.38	57	200	77	77	
SS-24	3	100	150	135	140	13.44	0.36	55	200	73	73	

TRC

Lowell Street Bridge - SPT N-value Calculations
Lawrence, MA PN: 274047

Calculation of $N_{1,60}$ Values

Boring TRC-BB-2 Depth to GWT = 18 feet bgs

Sample	Soil Layer	Mid-point Depth (feet bgs)	Blow Counts (N)	γ_m (pcf)	γ_{sat} (pcf)	σ'_v (ksf)	C_N	N_1	N_{60}	$N_{1,60}$	Design $N_{1,60}$	Average Design $N_{1,60}$
SS-1	1	1	47	105	120	0.11	1.99	93	63	125	100	**Fill**
SS-2	1	3	17	105	120	0.32	1.62	28	23	37	37	**23**
SS-3	1	5	7	105	120	0.53	1.45	10	9	14	14	
SS-4	1	7	11	105	120	0.74	1.34	15	15	20	20	
SS-5	1	9	13	105	120	0.95	1.25	16	17	22	22	
SS-6	1	11	60	105	120	1.16	1.19	71	80	95	95	**Glacial Till**
SS-7	1	13	37	105	120	1.37	1.13	42	49	56	56	**90**
SS-8	1	17.5	40	105	120	1.84	1.03	41	53	55	55	
SS-9	3	25	110	135	140	2.89	0.88	97	147	129	100	
SS-10	3	31.5	100	135	140	3.80	0.79	79	133	105	100	
SS-11	3	36.5	150	135	140	4.50	0.73	110	200	146	100	
SS-12	3	41.5	66	135	140	5.20	0.68	45	88	60	60	
SS-13	3	46.5	150	135	140	5.90	0.64	96	200	128	100	
SS-14	3	51.5	150	135	140	6.60	0.60	90	200	121	100	
SS-15	3	56.5	150	135	140	7.30	0.57	85	200	114	100	
SS-16	3	61.5	150	135	140	8.00	0.54	81	200	108	100	
SS-17	3	66.5	150	135	140	8.70	0.51	77	200	102	100	
SS-18	3	71.5	150	135	140	9.40	0.48	73	200	97	97	
SS-19	3	76.5	150	135	140	10.10	0.46	69	200	92	92	
SS-20	3	83	185	135	140	11.01	0.43	80	247	106	100	

Boring Mass DOT BB-1 Depth to GWT = 5 feet bgs

Sample	Soil Layer	Mid-point Depth (feet bgs)	Blow Counts (N) [1]	γ_m (pcf)	γ_{sat} (pcf)	σ'_v (ksf)	C_N	N_1	N_{60}	$N_{1,60}$	Design $N_{1,60}$	Average Design $N_{1,60}$
S-1	1	1.0	7	105	120	0.11	1.99	14	9	19	19	**Fill**
S-2	1	5.0	26	105	120	0.53	1.45	38	35	50	50	**35**
S-3	3	10.0	80	135	140	1.20	1.17	94	107	125	100	**Glacial Till**
S-4	3	14.9	56	135	140	1.86	1.03	57	75	77	77	**88**
S-5	3	20.0	61	135	140	2.58	0.92	56	81	75	75	
S-6	3	24.3	120	135	140	3.18	0.85	102	160	136	100	
S-7	3	29.3	120	135	140	3.87	0.78	94	160	125	100	
S-8	3	34.2	120	135	140	4.56	0.73	87	160	116	100	
S-9	3	39.5	120	135	140	5.30	0.68	81	160	108	100	
S-10	3	44.5	120	135	140	6.01	0.63	76	160	101	100	
S-11	3	49.3	120	135	140	6.68	0.60	72	160	96	96	
S-12	3	54.4	120	135	140	7.39	0.56	68	160	90	90	
S-13	3	59.2	120	135	140	8.06	0.54	64	160	86	86	
S-14	3	64.4	120	135	140	8.79	0.51	61	160	81	81	
S-15	3	69.3	120	135	140	9.48	0.48	58	160	77	77	
S-16	3	74.4	120	135	140	10.19	0.46	55	160	73	73	
S-17	3	79.3	120	135	140	10.87	0.44	52	160	70	70	

Notes: *1. If SPT refusal was encounter before the sampler was driven at least 18 inches into the soil, the N value was set to 120 blows per foot.*

Boring Mass DOT BB-2 Depth to GWT = 6.5 feet bgs

Sample	Soil Layer	Mid-point Depth (feet bgs)	Blow Counts (N) [1]	γ_m (pcf)	γ_{sat} (pcf)	σ'_v (ksf)	C_N	N_1	N_{60}	$N_{1,60}$	Design $N_{1,60}$	Average Design $N_{1,60}$
S-1	1	1.0	12	105	120	0.11	1.99	24	16	32	32	**Fill**
S-2	3	5.0	55	135	140	0.65	1.38	76	73	101	100	**32**
S-3	3	9.5	120	135	140	1.25	1.16	139	160	186	100	**Glacial Till**
S-4	3	14.4	120	135	140	1.91	1.02	122	160	163	100	**94**
S-5	3	20.9	80	135	140	2.83	0.89	71	107	95	95	
S-6	3	24.3	120	135	140	3.29	0.84	100	160	134	100	
S-7	3	29.5	120	135	140	4.02	0.77	92	160	123	100	
S-8	3	34.2	120	135	140	4.69	0.72	86	160	115	100	
S-9	3	39.2	120	135	140	5.38	0.67	80	160	107	100	
S-10	3	44.3	120	135	140	6.10	0.63	75	160	101	100	
S-11	3	49.5	120	135	140	6.82	0.59	71	160	95	95	
S-12	3	54.2	120	135	140	7.48	0.56	67	160	90	90	
S-13	3	59.4	120	135	140	8.21	0.53	64	160	85	85	
S-14	3	64.1	120	135	140	8.88	0.50	60	160	81	81	
S-15	3	69.4	120	135	140	9.61	0.48	57	160	76	76	

Notes: *1. If SPT refusal was encounter before the sampler was driven at least 18 inches into the soil, the N value was set to 120 blows per foot.*

Results

	East Abutment	West Abutment	Overall
Average $N_{1,60}$ for Existing Fill Layer =	**25**	**17**	**20**
Average $N_{1,60}$ for Glacial Till Layer =	**92**	**89**	**90**

Calculated by: WAN
Date: 10/16/2022

Checked by: LMG
Date: 10/16/2022

Revision: 1
Status: Final

Bearing Resistance and Settlement Calculations for Proposed East Abutment
10-foot Wide Footings

Objective: Confim that a 10-foot-wide footing an be used to evaluate bearing resistance and settlement based on the effective footing width.

References:
1) AASHTO LRFD Bridge Design Specifications: 9th Edition (2020)
2) TRC-BB-1 and TRC-BB-2 were drilled between October 2018 and January 2019
3) MassDOT BB-1 and TRC-BB-2 were drilled between May 30 and June 7, 2012
4) Foundations depth and design based on "Proposed Bridge, Lawrence, MA Lowell street over LMRC Rail Trail," TEC, dated October 20, 2022
5) Calculation of $N_{1,60}$ values presented spreadsheet entitled *297487 SPT Calcs - Lowell St Bridge 20221014.xlsx*

Assumptions:
1) Borings TRC-BB-2 and MassDOT BB-2 are representative of the soils at the site.
2) Proposed footing bottom of footing is assumed at El 45 (TEC 2022)
3) Footings for the abutment are pre-cast concrete
4) Loads placed along centerline of footing (Conversation with TEC 2022)
5) Eccentricity is negligible; lateral loads and moments will be resisted by the upper arch (slab) connected to the walls as indicated below. Design should be based on Normal loads, assuming zero eccentricity.

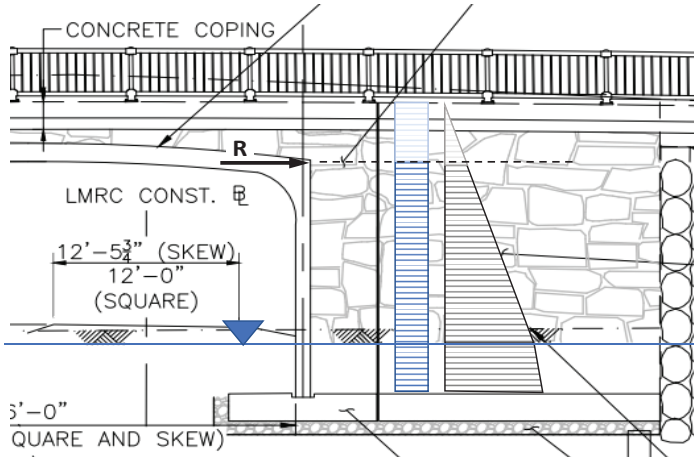

Solution:

Bearing Soil Properties/Subsurface Information

Unit Weight of Bearing Soil ($\gamma_{gt,sat}$):	135	pcf	γ based on saturated Glacial Till properties; Glacial Till below GWT.
Cohesion of Bearing Soil (c):	0	psf	γ based on Glacial Till properties
Unit Wt of New Fill Above Footing ($\gamma_{F,m}$):	120	pcf	Assume Structural Fill to elevation 52 and behind bridge abutments to elevation 68 feet.
Unit Wt of New Fill Above Footing ($\gamma_{F,sat}$):	125	pcf	γ based on moist and saturated Structural Fill properties.
Unit Weight of Existing Fill ($\gamma_{ef,sat}$):	120	pcf	γ based on saturated Existing Fill properties
Unit Weight of Water (γ_w):	62.4	pcf	
Unit Weight of Concrete (γ_c):	150	pcf	Assumed
Cohesion of Bearing Soil (c):	0	psf	
Friction Angle of Bearing Soil (ϕ_f):	36	degrees	ϕ_f based on Glacial Till properties
Friction Angle of Structural Fill (ϕ_{sf}):	32	degrees	ϕ_{sf} assumed for Structural Fill

Soil Description: Based on the BB-2 (MassDOT) and the TRC-BB-2 borings, Glacial Till is located below the 12 inches of crushed stone placed beneath footings.

Footing Elevation:	45	ft, NAVD-88	As shown in drawings, TEC 2022
Ground Surface (GS) Elevation:	52	ft, NAVD-88	As shown in drawings, TEC 2022
Groundwater Elevation:	52	ft, NAVD-88	Based on Boring Logs

Bearing Resistance and Settlement Calculations for Proposed East Abutment
10-foot Wide Footings

Footing Geometry

Minimum Footing Depth (D_f):	7	ft	As shown in drawings, TEC 2022
Groundwater Depth Below GS:	0	ft	Based on Boring Logs
Width (B):	10	ft	As shown in drawings, TEC 2022
Length (L):	52	ft	As shown in drawings, TEC 2022
Width Eccentricity (e_B):	0.0	ft	As shown in drawings, TEC 2022
			Note: Arch will resist lateral loads at top of arch, so lateral loads and eccentricity are not transmitted to footing.
Length Eccentricity (e_L):	0.0	ft	As shown in drawings, TEC 2022
Effective Width (B'):	10.0	ft	
Effective Length (L'):	52.0	ft	

Calculation of Eccentricity

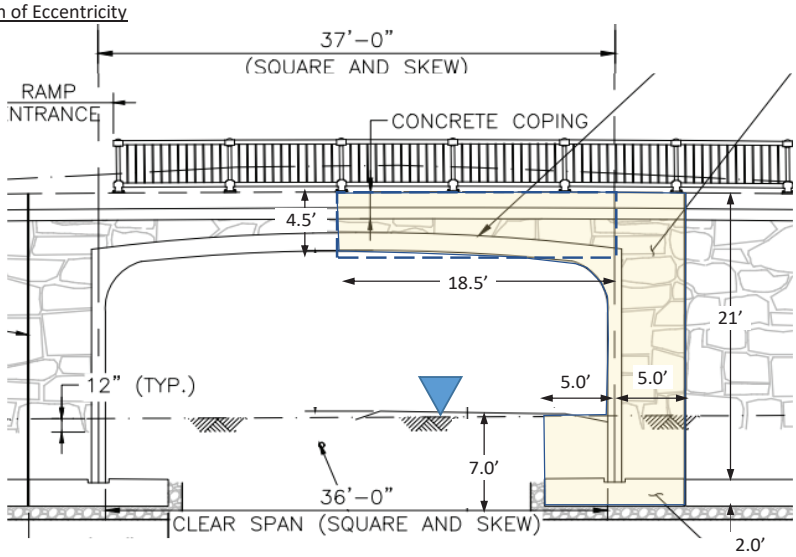

β =	0.00	degrees	0 Radians
Elev. Top of fill =	68.37	ft, NAVD-88	As shown in drawings, TEC 2022
Height above Footing (behind), H1=	21	ft	As shown in drawings, TEC 2022
Footing Thickness =	2	ft	As shown in drawings, TEC 2022
Total Height, H =	23	ft	As shown in drawings, TEC 2022
Height above footing (front)=	7	ft	As shown in drawings, TEC 2022
Width of Abut. Wall =	1	ft	As shown in drawings, TEC 2022
Width in front Abut. =	4.5	ft	Wall supported along centerline of footing (TEC, 2022)
Width behind Abut. =	4.5	ft	As shown in drawings, TEC 2022
Width above Arch=	18.5	ft	As shown in drawings, TEC 2022
Thickness above Arch=	4.5	ft	As shown in drawings, TEC 2022
Wt of Footing, W_2 =	1.75	Kips	Note: Below GWT
Wt in front Abut., V_f =	2.54	Kips	Note: Below GWT
Wt behind Abut., V_1 =	10.81	Kips	
Weight above Arch, V2=	9.99	Kips	
Traffic Surcharge =	2.50	Kips	Assumed 250 psf per unit width of footing
Total Load=	27.59	Kips	
Total Normal Pressure =	**2.76**	**ksf**	
Net Change in Stress under Footing =	**2.36**	**ksf**	Under static loads

Service Limit State (Hough Method) Bearing Resistance Calculation for Proposed East Abutment 10-foot Wide Footings

Total Settlement, $S_t = S_e + S_c + S_s$ Eq. 10.6.2.4.1-1

S_e = Elastic Settlement (feet)

S_c = Primary Consolidation Settlement (feet) = 0 Feet for Chesionless Soils

S_s = Secondary Settlement (feet) = 0 Feet for Chesionless Soils

Use Hough Method (AASHTO LFRD-BDS, 2020, Article 10.6.2.4.2b) to Estimate Elastic Settlement

$$S_e = \sum_{i=1}^{n} \Delta H_i \qquad (10.6.2.4.2b\text{-}1)$$

Where:

$$\Delta H_i = H_c \frac{1}{C'} \log\left(\frac{\sigma'_o + \Delta\sigma_v}{\sigma'_o}\right) \qquad (10.6.2.4.2b\text{-}2)$$

n = number of layers within stress zone (max. layer thickness 10 ft)

ΔH_i = Elastic settlement of layer (feet)

H_c = Initial height of layer i (feet)

C' = Bearing capacity index from Figure 10.6.2.4.2b-1

σ'_o = Initial vertical effective stress at midpoint of layer i (ksf)

$\Delta\sigma'_o$ = Increase in vertical stress at midpoint of layer i (ksf)

Distribution of Vertical Stress (AASHTO 2020)

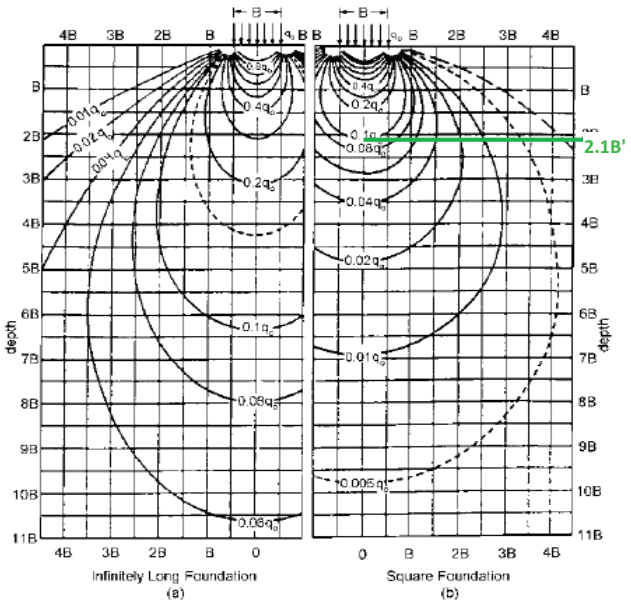

Figure 10.6.2.4.1-1—Boussinesq Vertical Stress Contours for Continuous and Square Footings Modified after Sowers (1979)

Bearing Capacity Index vs Corrected SPT (AASHTO 2020)

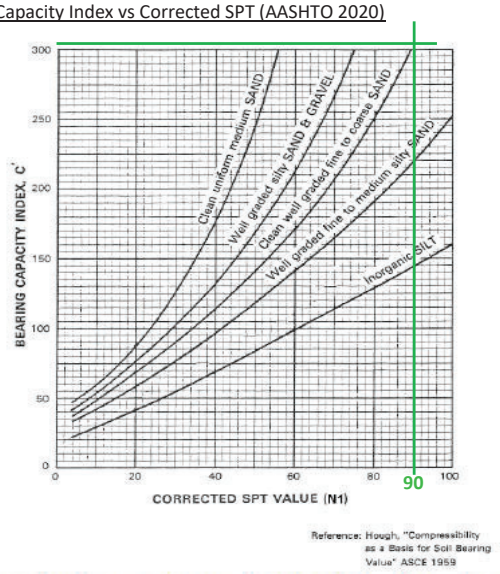

Figure 10.6.2.4.2b-1—Bearing Capacity Index versus Corrected *SPT* (Hough, 1959, as modified in Samtani and Nowatzki, 2006)

Note: AASHTO LRFD-BDS (2020) 10.6.2.4.2.b states: "SPT blow counts shall be corrected as specified in Article 10.4.6.2.4 for depth, i.e. overburden stress, and SPT hammer efficiency, before correlating the SPT blow counts to the bearing capacity index, C'."

Calculation of Elastic Settlment - Hough Method

Effective Width (B'):	10.0	feet		
Effective Length (L'):	52	feet	Ratio L':B' = 5.2	< 10, so Square Foundation
Total Normal Pressure =	**2.76**	**ksf**		
Depth to $0.1(q_o)$ =	**2.1B' =**	**21.0**	**feet**	
n =	3	layers	Assumed	
H_{ci} =	7.00	feet		
C' > 300, so use, C' =	300	$N_{1,60}$ =	90	blows per foot for silty fine to coarse sand

See ***297487 SPT Calcs - Lowell St Bridge 20221014.xlsx***

Use average $N_{1,60}$ blow counts for Glacial Till.

Lowell Street Bridge - East Abutment, Lawrence, MA
PN: 274047

	Depth to Water =	0	feet			
	d_{o1} =	3.50	feet bgs	Depth to midpoint Layer C1		0.35 * B'
Depth below footing	d_{o2} =	10.50	feet bgs	Depth to midpoint Layer C2		1.05 * B'
	d_{o3} =	17.50	feet bgs	Depth to midpoint Layer C3		1.75 * B'
	σ'_{o1} =	1.09	ksf	At midpoint Layer C1		
GWT at Elev. 52 ft	σ'_{o2} =	1.60	ksf	At midpoint Layer C2		
	σ'_{o3} =	2.11	ksf	At midpoint Layer C3		
	$\Delta\sigma_1$ =	2.48	ksf	At midpoint Layer C1	0.35 * B'	Load factor = 0.90
Based on Boussinesq pressure distribution for Square Fndn	$\Delta\sigma_2$ =	0.97	ksf	At midpoint Layer C2	1.05 * B'	Load factor = 0.35
	$\Delta\sigma_3$ =	0.41	ksf	At midpoint Layer C3	1.75 * B'	Load factor = 0.15
	ΔH_1 =	0.012	in			
	ΔH_2 =	0.005	in			
	ΔH_3 =	0.002	in			
	S_e =	**0.019**	**feet =**	**0.22**	**inches**	

Find Net Load Based on Allowable Differential Settlement Using Hough Method

FHWA-RC/TD-10-001 states maximum angular distortion should be less than 1/250

Bridge span = 36.0 feet, c-to-c (square)

So, allowable differential settlement = 1.73 inches

Conservatively, Calculate Net Load Based on 1-inch Differential Settlement

Net Normal Load =	**59.91**	**ksf**	
$\Delta\sigma_{1,max}$ =	53.92	ksf	At midpoint Layer C1
$\Delta\sigma 2_{,max}$ =	20.97	ksf	At midpoint Layer C2
$\Delta\sigma 3_{,max}$ =	8.99	ksf	At midpoint Layer C3
ΔH_1 =	0.476	in	
ΔH_2 =	0.322	in	
ΔH_3 =	0.202	in	
S_e =	**1.00**	**inches**	

Net Change in Stress at base of Footing = 59.91 ksf

Calculated by: WAN
Date: 10/18/2022

Checked by: IAM
Date: 10/21/2022

Revision: 2
Status: Final

Strength Limit State Bearing Resistance Calculation for Proposed East Abutment
10-foot Wide Footings

Factored Bearing Resistance: $q_R = q_n * \phi_b$ — Eq. 10.6.3.1.1-1

Resistance Factor (ϕ_b) =	0.45	Tb. 10.5.5.2.2-1

Nominal Resistance (q_n) =

$q_n = c*N_{cm} + \gamma*D_f*N_m*C_{wq} + 0.5*\gamma*B'*N_{\gamma m}*C_{w\gamma}$ — Eq. 10.6.3.1.2a-1

Assumption: Horizontal load = 0 (horizontal load and moments transferred by arch)

$N_{qm} = N_q*s_q*d_q*i_q$ — Eq. 10.6.3.1.2a-3

Based on foundation Soil Friction Angle

Bearing Capacity Factor (N_q)	37.8	Tb. 10.6.3.1.2a-1	
Shape Correction Factor (s_q)	1.14	Tb. 10.6.3.1.2a-3	
Load Inclination Factor (i_q)	1.00	Eq. 10.6.3.1.2a-7	
Depth Correction Factor (d_q)	1.4	Eq. 10.6.3.1.2a-10	$= 1 + 2\tan\phi_f(1-\sin\phi_f)^2\arctan(D_f/B')$
N_{qm}=	58.84		*(Df, B' - see Tab: Calcuations)*

$N_{cm} = N_c*s_c*i_c$ — Load Inclination — Eq. 10.6.3.1.2a-2

Bearing Capacity Factor (N_c)	50.6	Tb. 10.6.3.1.2a-1
Shape Correction Factor (s_c)	1.14	Tb. 10.6.3.1.2a-3
Load Inclination Factor (i_c)	1.00	Eq. 10.6.3.1.2a-6
N_{cm} =	57.87	

$N_{\gamma m} = N_\gamma*s_\gamma*i_\gamma$ — Eq. 10.6.3.1.2a-4

Bearing Capacity Factor (N_γ or $N_{\gamma q}$)	56.3	Tb. 10.6.3.1.2a-1
Shape Correction Factor (s_γ)	0.92	Tb. 10.6.3.1.2a-3
Load Inclination Factor (i_γ)	1.00	Eq. 10.6.3.1.2a-8
$N_{\gamma m}$=	51.97	

Groundwater Coefficients — Tb. 10.6.3.1.2a-2

(C_{wq})	0.50
($C_{w\gamma}$)	0.50

q_n=	**42 ksf**
q_R=	**19 ksf**

Calculated by: WAN
Date: 10/18/2022

Checked by: IAM
Date: 10/21/2022

Revision: 2
Status: Final

Bearing Resistance and Settlement Calculations for Proposed West Abutment
10-foot Wide Footings

Objective: Confim that a 10-foot-wide footing an be used to evaluate bearing resistance and settlement based on the effective footing width.

References:
1) AASHTO LRFD Bridge Design Specifications: 9th Edition (2020)
2) TRC-BB-1 and TRC-BB-2 were drilled between October 2018 and January 2019
3) MassDOT BB-1 and TRC-BB-2 were drilled between May 30 and June 7, 2012
4) Foundations depth and design based on "Proposed Bridge, Lawrence, MA Lowell street over LMRC Rail Trail," TEC, dated October 20, 2022
5) Calculation of $N_{1,60}$ values presented spreadsheet entitled *297487 SPT Calcs - Lowell St Bridge 20221014.xlsx*

Assumptions:
1) Borings TRC-BB-1 and MassDOT BB-1 are representative of the soils at the site.
2) Proposed footing bottom of footing is assumed at El 45 (TEC 2022)
3) Footings for the abutment are pre-cast concrete
4) Loads placed along centerline of footing (Conversation with TEC 2022)
5) Eccentricity is negligible; lateral loads and moments will be resisted by the upper arch (slab) connected to the walls as indicated below. Design should be based on Normal loads, assuming zero eccentricity.

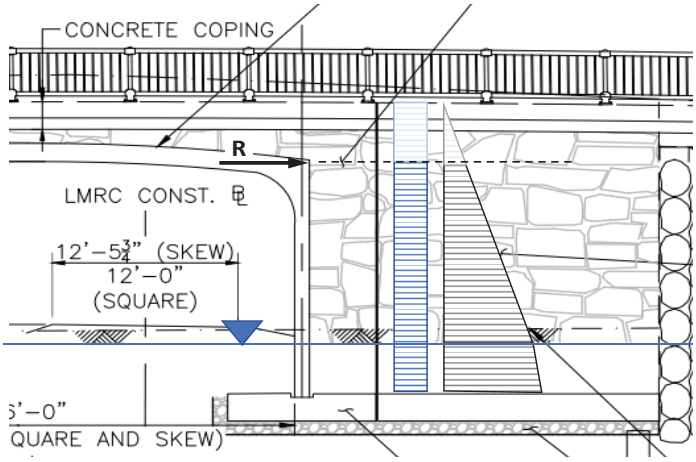

Solution:

Bearing Soil Properties/Subsurface Information

Unit Weight of Bearing Soil ($\gamma_{gt,sat}$):	135	pcf	γ based on saturated Glacial Till properties; Glacial Till below GWT.
Cohesion of Bearing Soil (c):	0	psf	γ based on Glacial Till properties
Unit Wt of New Fill Above Footing ($\gamma_{F,m}$):	120	pcf	Assume Structural Fill to elevation 52 and behind bridge abutments to elevation 68 feet.
Unit Wt of New Fill Above Footing ($\gamma_{F,sat}$):	125	pcf	γ based on moist and saturated Structural Fill properties.
Unit Weight of Existing Fill ($\gamma_{ef,sat}$):	120	pcf	γ based on saturated Existing Fill properties
Unit Weight of Water (γ_w):	62.4	pcf	
Unit Weight of Concrete (γ_c):	150	pcf	Assumed
Cohesion of Bearing Soil (c):	0	psf	
Friction Angle of Bearing Soil (ϕ_f):	36	degrees	ϕ_f based on Glacial Till properties
Friction Angle of Structural Fill (ϕ_{sf}):	32	degrees	ϕ_{sf} assumed for Structural Fill

Soil Description: Based on the BB-2 (MassDOT) and the TRC-BB-2 borings, Glacial Till is located below the 12 inches of crushed stone placed beneath footings.

Footing Elevation:	45	ft, NAVD-88	As shown in drawings, TEC 2022
Ground Surface (GS) Elevation:	52	ft, NAVD-88	As shown in drawings, TEC 2022
Groundwater Elevation:	52	ft, NAVD-88	Based on Boring Logs

Lowell Street Bridge, Lawrence, MA
Lateral Earth Pressures PN: 297487 Page: 1 of 2

Objective: Determine the lateral earth pressure coefficients for the abutments and wingwalls.

References:
1) Das, B.M. (1990) Principles of Geotechnical Engineering, 2nd Edition, PWS-Kent Publising Company, Boston, MA, 665 pages.
2) AASHTO LRFD Bridge Design Specifications (2020, 9th Edition) (AASHTO LRFD-BDS)
3) MassDOT BB-1 and TRC-BB-2 were drilled between May 30 and June 7, 2012
4) Foundations depth and design based on "Proposed Bridge, Lawrence, MA Lowell street over LMRC Rail Trail," TEC, dated October 20, 2022

Assumptions:
1) Borings TRC-BB-1, TRC-BB-2, MassDOT BB-1, and MassDOT BB-2 are representative of the soils at the site.
2) Structural Fill will be placed behind abutments and wingwalls.
3) Fill surface is horizontal.
4) Moist soil conditions for existing fills above GWT are representative.
5) GWT is located approximately 7 feet above the bottom footing elevations.
6) Soils are normally consolidated (i.e., Over Consolidation Ratio [OCR] is 1).

Solution:

Soil Properties/Subsurface Information

Unit Wt of Proposed Structural Fill ($\gamma_{sf,m}$):	120	pcf	γ based on moist Proposed Structural Fill properties
Unit Wt of Proposed Structural Fill ($\gamma_{gs,sat}$):	125	pcf	γ based on saturated Proposed Structural Fill properties
Unit Weight of Existing Fill ($\gamma_{ef,m}$):	100	pcf	γ based on moist Existing Fill properties
Unit Weight of Existing Fill ($\gamma_{ef,sat}$):	120	pcf	γ based on saturated Existing Fill properties
Unit Weight of Bearing Soil ($\gamma_{gt,sat}$):	135	pcf	γ based on saturated Glacial Till properties; below GWT.
Friction Angle of Proposed Structural Fill (ϕ_f):	32	degrees	ϕ_f based on Wt of Proposed Structural Fill properties
Friction Angle of Exisitng Fill (ϕ'_{ef}):	30	degrees	ϕ'_{ef} based on Existing Fill properties
Friction Angle of Bearing Soil (ϕ_f):	36	degrees	ϕ_f based on Glacial Till properties
Over Consolidation Ratio (OCR):	1		Assumed

At Rest Lateral Earth Pressure Coefficient, k_o

AASHTO LRFD Bridge Design Specifications (2020) Article 3.11.5.2

$k_o = (1 - \sin\phi)OCR^{\sin\phi}$ (3.11.5.2-2)

So,

Structural Fill	**k_o =**	**0.47**
Existing Fill	**k_o =**	**0.50**
Glacial Soils	**k_o =**	**0.41**

Active Lateral Earth Pressure Coefficient, k_a

AASHTO LRFD Bridge Design Specifications (2020) Article 3.11.5.3

$$k_a = \frac{\sin^2(\theta + \phi'_f)}{\Gamma[\sin^2\theta \sin(\theta - \delta)]} \quad (3.11.5.3\text{-}1)$$

and

$$\Gamma = \left[1 + \sqrt{\frac{\sin(\phi'_f + \delta)\sin(\phi'_f - \beta)}{\sin(\theta - \delta)\sin(\theta + \beta)}}\right]^2 \quad (3.11.5.3\text{-}2)$$

Where,

δ = Friction angle between wall and fill = 17.0 degrees
Based on Table C3.11.5.3-1 Formed Concrete against silty Sand
β = Angle of fill to horizontal = 0.0 degrees
θ = Angle of back of wall to horizontal = 90.0 degrees

So,

	Structural Fill	Existing Fill	Glacial Soils
Γ =	2.71	2.62	2.89
k_a =	**0.28**	**0.30**	**0.24**

Calculated by: WAN
Date: 12/15/2022
Revised: 12/23/2022

Checked by: AJ
Date: 12/14/2022

Revision: 6
Status: Final

USGS AASHTO-2009 Ground Motions Analysis

Output from USGS Ground Motion Tool for the Lowell Street Bridge to determine seismic deign parameters


```
request": {
    "date": "2023-01-06T19:19:17.557Z",
    "referenceDocument": "AASHTO-2009",
    "status": "success",
    "url": "https://earthquake.usgs.gov/ws/designmaps/aashto-2009.json?
latitude=42.704&longitude=-71.175&siteClass=D&title=Lowell St Bridge",
    "parameters": {
      "latitude": 42.704,
      "longitude": -71.175,
      "siteClass": "D",
      "title": "Lowell St Bridge"
    }
  },
  "response": {
    "data": {
      "pga": 0.088,
      "fpga": 1.6,
      "as": 0.142,
      "ss": 0.174,
      "fa": 1.6,
      "sds": 0.278,
      "s1": 0.042,
      "fv": 2.4,
      "sd1": 0.101,
      "sdc": "A",
      "ts": 0.365,
      "t0": 0.073,
      "twoPeriodDesignSpectrum": [
        [
          0,
          0.142
        ],
        [
          0.025,
          0.188
        ],
        [
          0.05,
          0.235
        ],
        [
          0.073,
          0.278
        ],
        [
          0.1,
          0.278
        ],
        [
          0.15,
          0.278
        ],
        [
          0.2,
          0.278
        ],
        [
          0.25,
          0.278
        ],
        [
          0.3,
          0.278
```

```
],
[
  0.35,
  0.278
],
[
  0.365,
  0.278
],
[
  0.4,
  0.253
],
[
  0.45,
  0.225
],
[
  0.5,
  0.203
],
[
  0.55,
  0.184
],
[
  0.6,
  0.169
],
[
  0.65,
  0.156
],
[
  0.7,
  0.145
],
[
  0.75,
  0.135
],
[
  0.8,
  0.127
],
[
  0.85,
  0.119
],
[
  0.9,
  0.113
],
[
  0.95,
  0.107
],
[
  1,
  0.101
],
[
  1.05,
  0.096
],
```

```
[
  1.1,
  0.092
],
[
  1.15,
  0.088
],
[
  1.2,
  0.084
],
[
  1.25,
  0.081
],
[
  1.3,
  0.078
],
[
  1.35,
  0.075
],
[
  1.4,
  0.072
],
[
  1.45,
  0.07
],
[
  1.5,
  0.068
],
[
  1.55,
  0.065
],
[
  1.6,
  0.063
],
[
  1.65,
  0.061
],
[
  1.7,
  0.06
],
[
  1.75,
  0.058
],
[
  1.8,
  0.056
],
[
  1.85,
  0.055
],
[
```

```
  1.9,
  0.053
],
[
  1.95,
  0.052
],
[
  2,
  0.051
],
[
  2.05,
  0.049
],
[
  2.1,
  0.048
],
[
  2.15,
  0.047
],
[
  2.2,
  0.046
],
[
  2.25,
  0.045
],
[
  2.3,
  0.044
],
[
  2.35,
  0.043
],
[
  2.4,
  0.042
],
[
  2.45,
  0.041
],
[
  2.5,
  0.041
],
[
  2.55,
  0.04
],
[
  2.6,
  0.039
],
[
  2.65,
  0.038
],
[
  2.7,
```

```
  0.038
],
[
  2.75,
  0.037
],
[
  2.8,
  0.036
],
[
  2.85,
  0.036
],
[
  2.9,
  0.035
],
[
  2.95,
  0.034
],
[
  3,
  0.034
],
[
  3.05,
  0.033
],
[
  3.1,
  0.033
],
[
  3.15,
  0.032
],
[
  3.2,
  0.032
],
[
  3.25,
  0.031
],
[
  3.3,
  0.031
],
[
  3.35,
  0.03
],
[
  3.4,
  0.03
],
[
  3.45,
  0.029
],
[
  3.5,
  0.029
```

```
        ],
        [
          3.55,
          0.029
        ],
        [
          3.6,
          0.028
        ],
        [
          3.65,
          0.028
        ],
        [
          3.7,
          0.027
        ],
        [
          3.75,
          0.027
        ],
        [
          3.8,
          0.027
        ],
        [
          3.85,
          0.026
        ],
        [
          3.9,
          0.026
        ],
        [
          3.95,
          0.026
        ],
        [
          4,
          0.025
        ]
      ]
    },
    "metadata": {
      "griddedValuesID": "2002-US-AASHTO-05-050-R1.rnd",
      "spatialInterpolationMethod": "linearlinearlinear"
    }
  }
}
```

AASHTO-2009 Web Service Documentation

This software is preliminary or provisional and is subject to revision. It is being provided to meet the need for timely best science. The software has not received final approval by the U.S. Geological Survey (USGS). No warranty, expressed or implied, is made by the USGS or the U.S. Government as to the functionality of the software and related material nor shall the fact of release constitute any such warranty. The software is provided on the condition that neither the USGS nor the U.S. Government shall be held liable for any damages resulting from the authorized or unauthorized use of the software.

Request Parameters (Input)

All parameters are required

latitude

Latitude of location of interest, in decimal degrees
Example: `34.05`

longitude

Longitude for location of interest, in decimal degrees
Example: `-118.25`

siteClass

Site Class, as defined in Table 3.4.2.1-1 of seismic design reference document
Options:
`A` for “Hard rock”
`B` for “Rock”
`C` for “Very dense soil and soft rock”
`D` for “Stiff soil”
`E` (See Table 3.4.2.1-1)

title

Title for location/request
Example: `Example`

Response Parameters (Output)

Includes information about request, followed by response

request

date

Timestamp, in format YYYY-MM-DDThh:mm:ssZ

referenceDocument

Seismic design reference document: “AASHTO-2009”

status

Either “success” or “error”

url

URL of request/response; see example below

parameters

latitude

See definitions of request parameters above

longitude

See definitions of request parameters above

siteClass

See definitions of request parameters above

title

See definitions of request parameters above

response

data

pga

PGA, the mapped horizontal Peak Ground Acceleration, in units of g

fpga

F_{PGA}, the site coefficient for PGA, from Table 3.4.2.3-1 of the seismic design reference document

as

$A_s = F_{PGA} \times PGA$ (Equation 3.4.1-1), the design peak ground acceleration, in units of g

ss

S_S, the mapped short-period (0.2-second) spectral acceleration, in units of g

fa

F_a, the site coefficient for S_S, from Table 3.4.2.3-1

sds

$S_{DS} = F_a \times S_S$ (Equation 3.4.1-2), the design short-period (0.2-second) spectral acceleration, in units of g

s1

S_1, the mapped 1-second spectral acceleration, in units of g

fv

F_v, the site coefficient for S_1, from Table 3.4.2.3-2

sd1

$S_{D1} = F_v \times S_1$ (Equation 3.4.1-3), the design 1-second spectral acceleration, in units of g

sdc

SDC, the Seismic Design Category from Table 3.5-1

ts

$T_S = S_{D1} / S_{DS}$ (Equation 3.4.1-6), in seconds, for construction of design response spectrum

t0

$T_0 = 0.2T_S$ (Equation 3.4.1-5), in seconds, for construction of design response spectrum

twoPeriodDesignSpectrum

Two-period design response spectrum

metadata

griddedValuesID

Identifier for underlying gridded values:
“1998-HI-AASHTO-05-050-R1.rnd” for Hawaii
“2002-US-AASHTO-05-050-R1.rnd” for the conterminous United States
“2003-PRVI-AASHTO-05-050-R1.rnd” for Puerto Rico & the U.S. Virgin Islands
“2006-AK-AASHTO-05-050-R1.rnd” for Alaska

spatialInterpolationMethod

Identifier for spatial interpolation method used to obtain values for location of interest from underlying gridded values: "linearlinearlinear" for bilinear

Example

Request

https://earthquake.usgs.gov/ws/designmaps /aashto-2009.json?latitude=34&longitude=-118&siteClass=C&title=Example

Response


```
{
  request:{
     date:"2019-06-13T15:46:45.448Z",
     referenceDocument:"AASHTO-2009",
     status:"success",
     url:"http://localhost:8000/ws/designmaps/aashto-2009.json
     parameters:{
        latitude:34,
        longitude:-118,
        siteClass:"C",
        title:"Example"
     }
  },
  response:{
     data:{
        pga:0.637,
        fpga:1,
        as:0.637,
        ss:1.512,
        fa:1,
        sds:1.512,
        s1:0.551,
        fv:1.3,
        sd1:0.716,
        sdc:"D",
        ts:0.474,
        t0:0.095,
        twoPeriodDesignSpectrum:[
           [
              0,
              0.637
           ],
           [
              0.025,
              0.868
           ],
```

```
[
   0.05,
   1.099
],
[
   0.095,
   1.512
],
[
   0.1,
   1.512
],
[
   0.15,
   1.512
],
[
   0.2,
   1.512
],
[
   0.25,
   1.512
],
[
   0.3,
   1.512
],
[
   0.35,
   1.512
],
[
   0.4,
   1.512
],
[
   0.45,
```

```
      1.512
    ],
    [
      0.474,
      1.512
    ],
    [
      0.5,
      1.433
    ],
    [
      0.55,
      1.302
    ],
    [
      0.6,
      1.194
    ],
    [
      0.65,
      1.102
    ],
    [
      0.7,
      1.023
    ],
    [
      0.75,
      0.955
    ],
    [
      0.8,
      0.895
    ],
    [
      0.85,
      0.843
    ],
```

```
            [
               0.9,
               0.796
            ],
            [
               0.95,
               0.754
            ],
            [
               1,
               0.716
            ],
            [
               1.05,
               0.682
            ],
            [
               1.1,
               0.651
            ],
            [
               1.15,
               0.623
            ],
            [
               1.2,
               0.597
            ],
            [
               1.25,
               0.573
            ],
            [
               1.3,
               0.551
            ],
            [
               1.35,
```

```
      0.531
    ],
    [
      1.4,
      0.512
    ],
    [
      1.45,
      0.494
    ],
    [
      1.5,
      0.478
    ],
    [
      1.55,
      0.462
    ],
    [
      1.6,
      0.448
    ],
    [
      1.65,
      0.434
    ],
    [
      1.7,
      0.421
    ],
    [
      1.75,
      0.409
    ],
    [
      1.8,
      0.398
    ],
```

```
[
   1.85,
   0.387
],
[
   1.9,
   0.377
],
[
   1.95,
   0.367
],
[
   2,
   0.358
],
[
   2.05,
   0.349
],
[
   2.1,
   0.341
],
[
   2.15,
   0.333
],
[
   2.2,
   0.326
],
[
   2.25,
   0.318
],
[
   2.3,
```

```
      0.311
    ],
    [
      2.35,
      0.305
    ],
    [
      2.4,
      0.298
    ],
    [
      2.45,
      0.292
    ],
    [
      2.5,
      0.287
    ],
    [
      2.55,
      0.281
    ],
    [
      2.6,
      0.276
    ],
    [
      2.65,
      0.27
    ],
    [
      2.7,
      0.265
    ],
    [
      2.75,
      0.26
    ],
```

```
[
   2.8,
   0.256
],
[
   2.85,
   0.251
],
[
   2.9,
   0.247
],
[
   2.95,
   0.243
],
[
   3,
   0.239
],
[
   3.05,
   0.235
],
[
   3.1,
   0.231
],
[
   3.15,
   0.227
],
[
   3.2,
   0.224
],
[
   3.25,
```

```
      0.22
    ],
    [
      3.3,
      0.217
    ],
    [
      3.35,
      0.214
    ],
    [
      3.4,
      0.211
    ],
    [
      3.45,
      0.208
    ],
    [
      3.5,
      0.205
    ],
    [
      3.55,
      0.202
    ],
    [
      3.6,
      0.199
    ],
    [
      3.65,
      0.196
    ],
    [
      3.7,
      0.194
    ],
```

```
                [
                   3.75,
                   0.191
                ],
                [
                   3.8,
                   0.189
                ],
                [
                   3.85,
                   0.186
                ],
                [
                   3.9,
                   0.184
                ],
                [
                   3.95,
                   0.181
                ],
                [
                   4,
                   0.179
                ]
             ]
          },
          metadata:{
             griddedValuesID:"2002-US-AASHTO-05-050-R1.rnd",
             spatialInterpolationMethod:"linearlinearlinear"
          }
       }
    }
```

Passive Lateral Earth Pressure Coefficient, k_p

AASHTO LRFD Bridge Design Specifications (2020) Article 3.11.5.4

$k_p = R*k'_p$ (3.11.5.4-2)

Where,

k'_p and R are from Figure 3.11.5.4-1, below

	Structural Fill	Existing Fill	Glacial Soils	
k'_p =	7.40	6.40	11.60	
δ/ϕ'_{ef} =	0.53	0.57	0.47	
R =	0.723	0.789	0.636	(Interpolated)

So,

Structural Fill	**k_p =**	**5.35**
Existing Fill	**k_p =**	**5.05**
Glacial Soils	**k_p =**	**7.38**

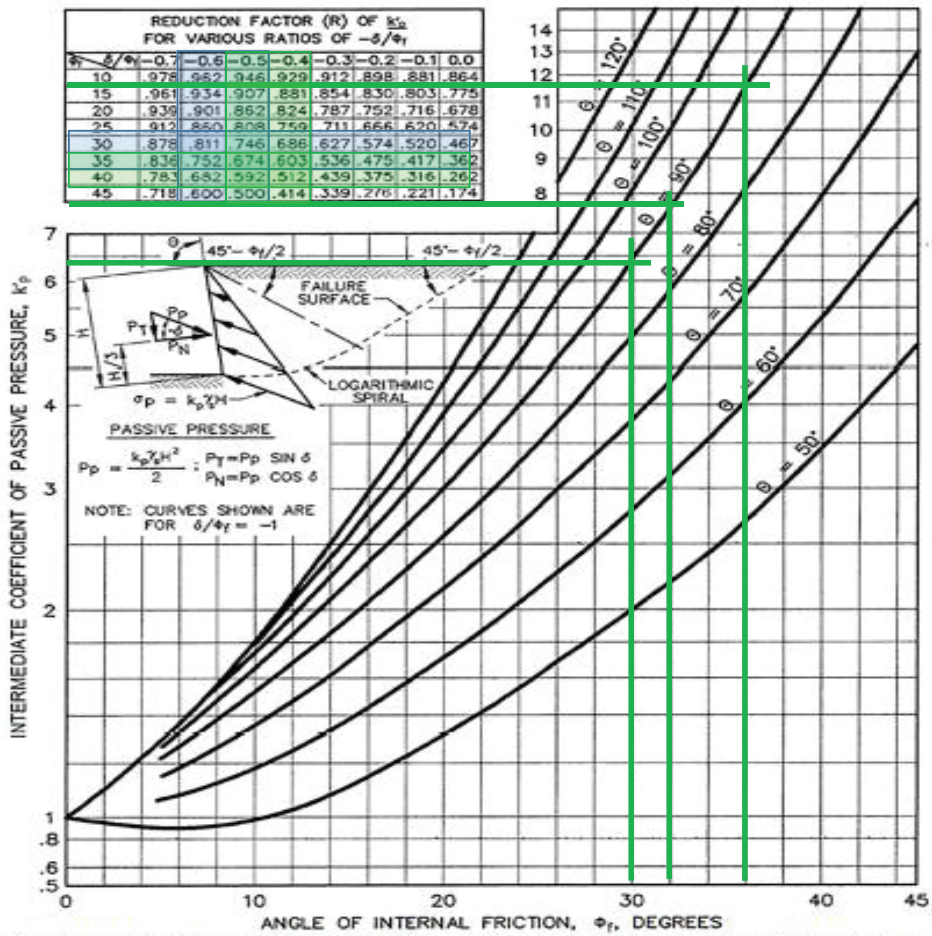

Figure 3.11.5.4-1—Computational Procedures for Passive Earth Pressures for Vertical and Sloping Walls with Horizontal Backfill (U.S. Department of the Navy, 1982a)

Calculated by: WAN
Date: 12/15/2022
Revised: 12/23/2022

Checked by: AJ
Date: 12/14/2022

Revision: 6
Status: Final

Bearing Resistance and Settlement Calculations for Proposed West Abutment
10-foot Wide Footings

Footing Geometry

Minimum Footing Depth (D_f):	7	ft	As shown in drawings, TEC 2022
Groundwater Depth Below GS:	0	ft	Based on Boring Logs
Width (B):	10	ft	As shown in drawings, TEC 2022
Length (L):	52	ft	As shown in drawings, TEC 2022
Width Eccentricity (e_B):	0.0	ft	As shown in drawings, TEC 2022
			Note: Arch will resist lateral loads at top of arch, so lateral loads and eccentricity are not transmitted to footing.
Length Eccentricity (e_L):	0.0	ft	As shown in drawings, TEC 2022
Effective Width (B'):	10.0	ft	
Effective Length (L'):	52.0	ft	

Calculation of Eccentricity

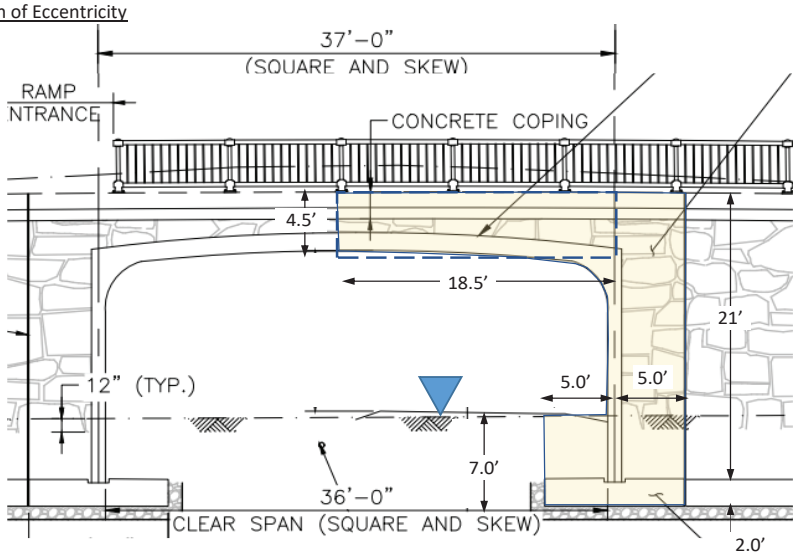

β =	0.00	degrees	0 Radians
Elev. Top of fill =	68.37	ft, NAVD-88	As shown in drawings, TEC 2022
Height above Footing (behind), H1=	21	ft	As shown in drawings, TEC 2022
Footing Thickness =	2	ft	As shown in drawings, TEC 2022
Total Height, H =	23	ft	As shown in drawings, TEC 2022
Height above footing (front)=	7	ft	As shown in drawings, TEC 2022
Width of Abut. Wall =	1	ft	As shown in drawings, TEC 2022
Width in front Abut. =	4.5	ft	Wall supported along centerline of footing (TEC, 2022)
Width behind Abut. =	4.5	ft	As shown in drawings, TEC 2022
Width above Arch=	18.5	ft	As shown in drawings, TEC 2022
Thickness above Arch=	4.5	ft	As shown in drawings, TEC 2022
Wt of Footing, W_2 =	1.75	Kips	Note: Below GWT
Wt in front Abut., V_f =	2.54	Kips	Note: Below GWT
Wt behind Abut., V_1 =	10.81	Kips	
Weight above Arch, V2=	9.99	Kips	
Traffic Surcharge =	2.50	Kips	Assumed 250 psf per unit width of footing
Total Load=	27.59	Kips	
Total Normal Pressure =	**2.76**	**ksf**	
Net Change in Stress under Footing =	**2.36**	**ksf**	Under static loads

Calculated by: WAN
Date: 10/18/2022

Checked by: IAM
Date: 10/21/2022

Revision: 6
Status: Final

Service Limit State (Hough Method) Bearing Resistance Calculation for Proposed West Abutment
10-foot Wide Footings

Total Settlement, $S_t = S_e + S_c + S_s$ Eq. 10.6.2.4.1-1

S_e = Elastic Settlement (feet)

S_c = Primary Consolidation Settlement (feet) = 0 Feet for Chesionless Soils

S_s = Secondary Settlement (feet) = 0 Feet for Chesionless Soils

Use Hough Method (AASHTO LFRD-BDS, 2020, Article 10.6.2.4.2b) to Estimate Elastic Settlement

$$S_e = \sum_{i=1}^{n} \Delta H_i \qquad (10.6.2.4.2b\text{-}1)$$

Where:

$$\Delta H_i = H_c \frac{1}{C'} \log\left(\frac{\sigma'_o + \Delta\sigma_v}{\sigma'_o}\right) \qquad (10.6.2.4.2b\text{-}2)$$

n = number of layers within stress zone (max. layer thickness 10 ft)

ΔH_i = Elastic settlement of layer (feet)

H_c = Initial height of layer i (feet)

C' = Bearing capacity index from Figure 10.6.2.4.2b-1

σ'_o = Initial vertical effective stress at midpoint of layer i (ksf)

$\Delta\sigma'_o$ = Increase in vertical stress at midpoint of layer i (ksf)

Distribution of Vertical Stress (AASHTO 2020)

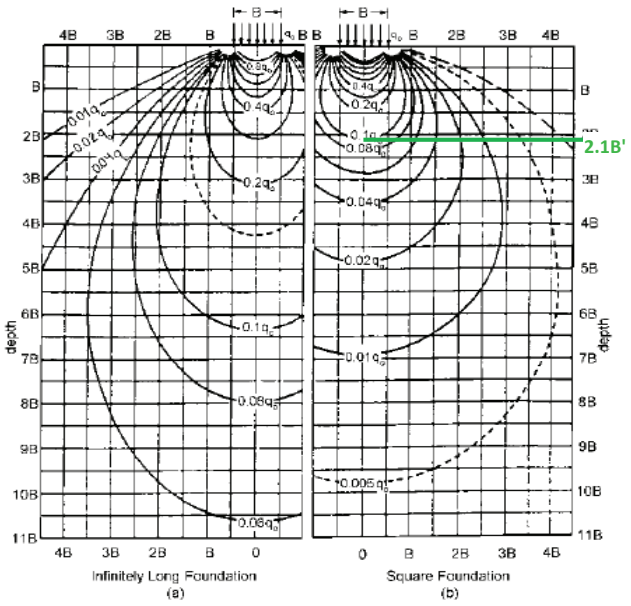

Figure 10.6.2.4.1-1—Boussinesq Vertical Stress Contours for Continuous and Square Footings Modified after Sowers (1979)

Bearing Capacity Index vs Corrected SPT (AASHTO 2020)

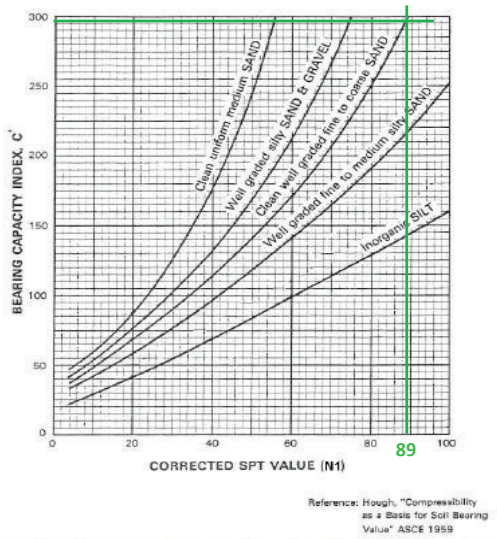

Figure 10.6.2.4.2b-1—Bearing Capacity Index versus Corrected *SPT* (Hough, 1959, as modified in Samtani and Nowatzki, 2006)

Note: AASHTO LRFD-BDS (2020) 10.6.2.4.2.b states: "SPT blow counts shall be corrected as specified in Article 10.4.6.2.4 for depth, i.e. overburden stress, and SPT hammer efficiency, before correlating the SPT blow counts to the bearing capacity index, C'."

Calculation of Elastic Settlment - Hough Method

Effective Width (B'):	10.0	feet		
Effective Length (L'):	52	feet	Ratio L':B' = 5.2	< 10, so Square Foundation
Net Change in Stress under Footing =	**2.36**	**ksf**		
Depth to $0.1(q_o)$ =	**2.1B' = 21.0**	**feet**		
n =	3	layers	Assumed	
H_{ci} =	7.00	feet		
C' > 300, so use, C' =	295		$N_{1,60}$ = 89	blows per foot for silty fine to coarse sand

See ***297487 SPT Calcs - Lowell St Bridge 20221014.xlsx***

Use average $N_{1,60}$ blow counts for Glacial Till.

TRC

Lowell Street Bridge - West Abutment, Lawrence, MA
PN: 274047

	Depth to Water =	0	feet			
	d_{o1} =	3.50	feet bgs	Depth to midpoint Layer C1		0.35 * B'
Depth below footing	d_{o2} =	10.50	feet bgs	Depth to midpoint Layer C2		1.05 * B'
	d_{o3} =	17.50	feet bgs	Depth to midpoint Layer C3		1.75 * B'
	σ'_{o1} =	1.09	ksf	At midpoint Layer C1		
GWT at Elev. 52 ft	σ'_{o2} =	1.60	ksf	At midpoint Layer C2		
	σ'_{o3} =	2.11	ksf	At midpoint Layer C3		
	$\Delta\sigma_1$ =	2.12	ksf	At midpoint Layer C1	0.35 * B'	Load factor = 0.90
Based on Boussinesq pressure distribution for Square Fndn	$\Delta\sigma_2$ =	0.82	ksf	At midpoint Layer C2	1.05 * B'	Load factor = 0.35
	$\Delta\sigma_3$ =	0.35	ksf	At midpoint Layer C3	1.75 * B'	Load factor = 0.15
	ΔH_1 =	0.011	in			
	ΔH_2 =	0.004	in			
	ΔH_3 =	0.002	in			

S_e = 0.017 feet = 0.20 inches

Find Net Load Based on Allowable Differential Settlement Using Hough Method

FHWA-RC/TD-10-001 states maximum angular distortion should be less than 1/250

Bridge span = 36.0 feet, c-to-c (square)

So, allowable differential settlement = 1.73 inches

Conservatively, Calculate Net Load Based on 1-inch Differential Settlement

Net Normal Load = 56.92 ksf

$\Delta\sigma_{1,max}$ =	51.23	ksf	At midpoint Layer C1
$\Delta\sigma 2_{,max}$ =	19.92	ksf	At midpoint Layer C2
$\Delta\sigma 3_{,max}$ =	8.54	ksf	At midpoint Layer C3
ΔH_1 =	0.478	in	
ΔH_2 =	0.321	in	
ΔH_3 =	0.200	in	

S_e = 1.00 inches

Net Change in Stress at base of Footing = 56.92 ksf

Strength Limit State Bearing Resistance Calculation for Proposed West Abutment
10-foot Wide Footings

Factored Bearing Resistance: $q_R = q_n * \phi_b$ — Eq. 10.6.3.1.1-1

Resistance Factor (ϕ_b) =	0.45	Tb. 10.5.5.2.2-1	
Nominal Resistance (q_n) =			
$q_n = c*N_{cm} + \gamma*D_f*N_m*C_{wq} + 0.5*\gamma*B'*N_{\gamma m}*C_{w\gamma}$		Eq. 10.6.3.1.2a-1	

Assumption: Horizontal load = 0 (horizontal load and moments transferred by arch)

$N_{qm} = N_q*s_q*d_q*i_q$ — Eq. 10.6.3.1.2a-3

Based on foundation Soil Friction Angle

Bearing Capacity Factor (N_q)	37.8	Tb. 10.6.3.1.2a-1	
Shape Correction Factor (s_q)	1.14	Tb. 10.6.3.1.2a-3	
Load Inclination Factor (i_q)	1.00	Eq. 10.6.3.1.2a-7	
Depth Correction Factor (d_q)	1.4	Eq. 10.6.3.1.2a-10	$= 1 + 2\tan\phi_f(1-\sin\phi_f)^2\arctan(D_f/B')$
N_{qm}=	58.84		*(Df, B' - see Tab: Calcuations)*

$N_{cm} = N_c*s_c*i_c$ — Load Inclination — Eq. 10.6.3.1.2a-2

Bearing Capacity Factor (N_c)	50.6	Tb. 10.6.3.1.2a-1	
Shape Correction Factor (s_c)	1.14	Tb. 10.6.3.1.2a-3	
Load Inclination Factor (i_c)	1.00	Eq. 10.6.3.1.2a-6	
N_{cm} =	57.87		

$N_{\gamma m} = N_\gamma*s_\gamma*i_\gamma$ — Eq. 10.6.3.1.2a-4

Bearing Capacity Factor (N_γ or $N_{\gamma q}$)	56.3	Tb. 10.6.3.1.2a-1	
Shape Correction Factor (s_γ)	0.92	Tb. 10.6.3.1.2a-3	
Load Inclination Factor (i_γ)	1.00	Eq. 10.6.3.1.2a-8	
$N_{\gamma m}$=	51.97		

Groundwater Coefficients — Tb. 10.6.3.1.2a-2

(C_{wq})	0.50	
($C_{w\gamma}$)	0.50	

q_n=	**42 ksf**
q_R=	**19 ksf**

Calculated by: WAN
Date: 10/18/2022

Checked by: IAM
Date: 10/21/2022

Revision: 6
Status: Final

GEOTECHNICAL DESIGN REPORT

MassDOT Highway Division
B&M Railroad Bridge over Manchester Street
Bridge No. L-04-030 (8JA)
Lawrence, Massachusetts

Prepared for:
TEC, The Engineering Corporation
282 Merrimack Street
Second Floor
Lawrence, Massachusetts 01843

Prepared by:
TRC Environmental Corporation
249 Western Avenue
Augusta, Maine 04330

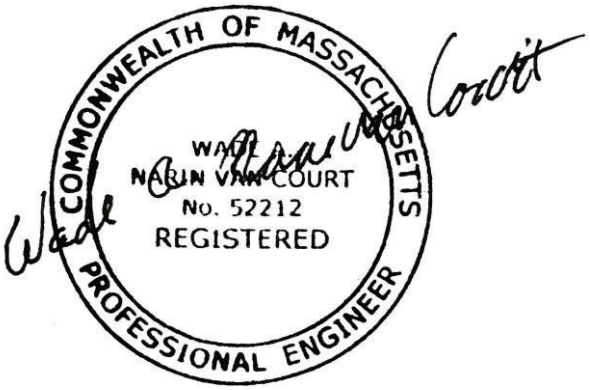

TRC Project Number 274047

February 2019
Revision 6, December 2022

Wade A. Narin Van Court, PhD, PE
Senior Geotechnical Engineer
Massachusetts PE# 52212

Alex Javes, PE*
Senior Geotechnical Engineer
* Wisconsin

Table of Contents

Executive Summary iii
1 INTRODUCTION 1
1.1 Background 1
1.2 Project Description 2
1.2.1 Existing Bridge 2
1.2.2 Proposed Bridge 2
2 SUBSURFACE EXPLORATION PROGRAM 3
3 SITE CONDITIONS 4
3.1 Regional Geology 4
3.2 Subsurface Conditions 4
3.2.1 South Abutment 4
3.2.2 North Abutment 5
3.3 Groundwater 5
3.4 Soil Testing 5
4 Geotechnical Considerations 5
4.1 Geotechnical Engineering Recommendations 6
4.1.1 Foundation Description 6
4.1.2 Bearing Resistance and Settlement 7
4.1.3 Overturning and Sliding 8
4.1.4 Embankment Settlement 9
4.1.5 Seismic Design 10
5 Construction Recommendations 13
5.1 Earthwork 13
5.2 Temporary Excavation Support 14
5.3 Groundwater Management and Considerations 14
5.4 Surface Drainage 14
5.5 Protection of Adjacent Structures 14
5.6 Reuse of Excavated Soils 15
5.7 Recommendations for Further Investigation 15
6 GENERAL COMMENTS/LIMITATIONS 15

FIGURES

Figure 1: Site Location Map

Figure 2: Boring Location Map

Figure 3: Subsurface Profile

APPENDICES

Appendix A Historical Drawings

Appendix B Definition of Terms

Appendix C Boring Logs

Appendix D Soil Laboratory Test Results

Appendix E Geotechnical Analysis Calculations

Executive Summary

Geosearch, Inc. of Fitchburg, Massachusetts advanced two soil borings (BB-1 and BB-2) in the former railway embankment at the site on July 7 and July 10, 2017.

Under approximately 0.33 feet of topsoil, the TRC borings (BB-1 and BB-2) initially encountered fill to a depth of approximately 18 feet below the ground surface (bgs) (elevations of approximately 55.1 to 48.7 feet) underlain by glacial soils to the final depth of the borings at depths of 32 and 34 feet bgs, respectively. Boring BB-2 also encountered an approximately 7-foot-thick layer of organic silt in the range of 18.2 to 25 feet bgs (elevation approximately 57.5 to 48.7 feet), which overlay the glacial soils.

Note, the organic silt layer was only encountered in boring BB-2, so its extent and geometry of the embedded foundation could not be determined. Having this soil layer within the foundation influence depth zone of the abutment would result in serious bearing and settlements issues. However, no distress of the existing granite block walls was observed, so TRC considered the extent of the organic silt layer to be limited and it did not extend beneath the existing abutments or wing walls. The findings enclosed in this report shall be considered as preliminary, subject for additional confirmation and verification for the foundation shape, size, embedment, and extent; limits, extents, and characteristics of the organic silt; and other subsoils within the influence zones of the foundations.

Groundwater was encountered in the borings at approximately 17 feet below ground surface corresponding to elevations of approximately 56 to 57 feet.

The existing abutment foundations are intended to be reused for support of the proposed pedestrian bridge. The existing abutments are constructed of granite blocks with near vertical front face (½-inch per foot batter on the face). The existing abutments and wing walls appeared to be in good condition and no evidence of excessive settlements or movements was observed. These foundations are understood to be shallow foundations bearing on natural undisturbed soils (i.e., glacial soils); however, the information available for the existing foundations was not complete. Therefore, our calculations were based on uncertain foundation geometry and shape and uncertain soil conditions and subject to verification by additional borings and the results should be considered preliminary and subject to revision.

The proposed wing walls will be concrete masonry walls up to approximately 8 feet high. These walls will be supported on 2-foot-thick concrete footings built on a 2-foot-thick layer of crushed stone (i.e., MassDOT Type a Gravel Borrow for Bridge Foundations) overlying the existing fill in the embankment.

Based on TRC's limited subsurface exploration program, soil properties and strength parameters provided in **Table ES-1**, below, were used for geotechnical analyses.

Table ES-1: Design Soil Properties (Subject to additional verification)

Property	Existing Fill	Organic Silt	Proposed Structural Fill	Glacial Soils
Dry Unit Weight (pcf)	95	90	115	115
Moist Unit Weight (pcf)	105	97	120	120
Saturated Unit Weight (pcf)	120	105	125	125
Friction Angle (ϕ, degrees)	30	0	32	32
Cohesion (psf)	0	500	0	0

Notes: pcf – pounds per cubic foot; psf – pounds per square foot

The type and depth of the foundations for existing abutments and wing walls is not known; however, TRC understands the existing abutments and wing walls are supported on shallow foundations with a foundation bearing elevation of 58.3 and the stability analyses based on the abutment footing dimensions of 40 feet wide and 42 to 46 feet long and wing walls dimensions of 12½ to 35 feet long with average widths of 4.5 to 7.8 feet. Based on the geometry of the existing abutment and wingwall foundations, the connections to the footings are assumed to be fixed. As noted above, the specific details of the existing foundations are subject to verification. Calculations for reusing the existing foundations to support the pedestrian bridge are attached in **Appendix E**.

Analyses for proposed wing walls, where needed, were based on foundation type and information that were provided to us by The Engineering Corporation (TEC): continuous spread footing (5 feet wide), with an estimated foundation bearing elevation of 69 feet on a minimum of 24 inches of crush gravel.

TRC performed the geotechnical engineering analyses in general accordance with the Load and Resistance Factor Design (LRFD) methodology described in the AASHTO LRFD Specifications (AASHTO, 2020[1]) (LRFD-BDS) and the AASHTO LRFD Seismic Bridge Design (AASHTO, 2011[2]) (LRFD-Seismic) for evaluating the recommended factored bearing resistance (Strength Limit State) and the estimated foundation settlement based on the Service Limit State analysis for the existing abutment and wing walls spread footings, as well as for the footings for the proposed new wing walls. In accordance with the LRFD-BDS, a bearing resistance factor (ϕ_b) of 0.45 was used for the strength limit state analyses and calculated settlements for the service limit state analyses based on a resistance factor, ϕ_b of 1. Based on the soils being cohesionless, immediate (i.e., elastic) settlement analyses were performed for the footings and wing walls. The preliminary calculated bearing resistances are summarized in **Table ES-2**, below.

[1] AASHTO. 2020. *LRFD Bridge Design Specifications*, 9th Edition, 2020, American Association of State Highway and Transportation Officials.

[2] AASHTO. 2011. *AASHTO Guide Specifications for LRFD Seismic Bridge Design*, 2nd Edition, with interim revisions through 2022, American Association of State Highway and Transportation Officials.

Table ES-2: Summary of Bearing Resistances

Strength Limit State	Factored Bearing Resistance (ksf) (LRFD-BDS Eq. 10.6.3.1.1-1)	
Existing North and South Abutments	$q_R = q_n * \phi_b =$	**7.2**
Existing Wing Walls	$q_R = q_n * \phi_b =$	**8.1**
Proposed Concrete Masonry Wing Walls	$q_R = q_n * \phi_b =$	**11.3**

This report is subject to the limitations provided in **Section 6**, and the Terms and Conditions of our agreement.

1 INTRODUCTION

TRC Environmental Corporation (TRC) has prepared this geotechnical engineering report for The Engineering Corporation (TEC) for the reuse of the existing railroad bridge substructures and retaining walls associated with the replacement of the former B&M Railroad (B&MRR) Bridge (Massachusetts Department of Transportation Highway Division [MassDOT] Bridge No. L-04-030 [8JA]) superstructure with a pedestrian bridge over Manchester Street in Lawrence, Massachusetts (Site). In addition, the existing wing walls will be extended with the proposed new wing walls. The location of the Site is shown on **Figure 1** (Latitude: 42.712N; Longitude: -71.18E). This report summarizes the soil and groundwater information relating to subsurface conditions at the Site and presents geotechnical recommendations for the re-use of the existing substructures.

The objectives of the geotechnical subsurface exploration program were to characterize the subsurface conditions at the Site, and to provide recommendations for design and construction activities including site preparation, earthwork, foundations, and soil improvement, as necessary. To accomplish these objectives, TRC undertook the subsurface exploration program and prepared this geotechnical report in general accordance with the MassDOT Load and Resistance Factor Design (LRFD) Bridge Manual (Part I Section 1.2 and Section 2.5, respectively). TRC performed geotechnical analyses in general accordance with the AASHTO LRFD Bridge Design Specifications (AASHTO, 2020[3]) and AASHTO LRFD Seismic Bridge Design (AASHTO, 2011[4]) (LRFD-Seismic).

This report was prepared in accordance with our February 1, 2017 agreement and is subject to the limitations included in **Section 6**, and the Terms and Conditions of our agreement.

1.1 Background

Our understanding of the project is based on the following:

- Correspondence with The Engineering Corporation (TEC);
- Conceptual plans provided by TEC for the proposed bridge. Detailed foundations plans and sizes were not provided.
- Previous subsurface exploration program performed by MassDOT; and,
- Site visits and geotechnical investigations by TRC.

[3] AASHTO. 2020. *LRFD Bridge Design Specifications*, 9th Edition, 2020, American Association of State Highway and Transportation Officials.

[4] AASHTO. 2011. *AASHTO Guide Specifications for LRFD Seismic Bridge Design*, 2nd Edition, with interim revisions through 2022, American Association of State Highway and Transportation Officials.

1.2 Project Description

The B&MRR Bridge spans Manchester Street at a skew from approximately the southeast to the northwest. TRC understands that the design calls for raising the grades by approximately four feet and installing a pedestrian bridge. The existing North and South Abutments and their associated wing walls will be capped and re-used and new wing walls will be installed to extend the existing wing walls. Note, referring to the abutment on the northwest side of Manchester Street will be referred to as the North Abutment and the abutment on the southeast side of Manchester Street will be referred to as the South Abutment to be consistent with the nomenclature used in the B&MRR drawings.

1.2.1 Existing Bridge

The steel girder railroad bridge superstructure was demolished in 2017. The railroad bridge formerly carried two sets of railroad tracks over Manchester Street running in a northwest to southeast direction. No longer in service and in disrepair, the tracks are located at the top of an earthen embankment. The remaining bridge abutments and wing walls are parallel to the roadway and are constructed of granite block masonry. Based on a recent survey by Greenman Pedersen, Inc., the ground surface elevation at the site varies between approximately El. 61 feet at Manchester Street to El. 73.6 feet behind the abutments.

TEC provided TRC with drawings of the former bridge titled Boston & Maine Railroad, Western Div. – Methuen Branch, No. 213 Manchester St. Bridge dated September 1895. According to the 1895 drawings, the combined gravity abutment/wingwall structures are 72 feet long and 81.5 feet long on the north and south sides of the bridge, respectively. The toe of the structure below the ground surface is shown to extend 6 inches outward from the front face of the granite block wall. The width at the base is shown to be 10 feet wide for the abutments; wing walls vary from approximately 4.5 to 6.5 feet wide at the ends to 6.5 to 9 feet wide at the bridge abutments. The 1895 drawings indicate a clear span of 50 feet between the face of the abutments at the ground surface. The 1895 drawings are presented in **Appendix A**.

The foundations of the abutments and wing walls are not shown on the 1895 drawings and are of unknown construction. TRC understands that TEC is assuming the existing abutments and wing walls are supported on shallow granite block foundations with a bottom elevation of El. 58.3.

1.2.2 Proposed Bridge

TRC understands that the current plan is to construct a replacement pedestrian bridge superstructure that will be supported by the existing substructures. The granite block abutments will be capped with concrete and extended upward to accommodate a raise in grade of the approach embankments to approximate elevations of 77.2 and 77.6 feet

at the South and North Abutments of the bridge, respectively (i.e., increases of 3.4 and 4.0 feet, respectively). The top of the embankment will accommodate a 12-foot wide paved roadway with 2.5-foot wide shoulders on both sides for a total top width of 17 feet. TRC understands TEC proposes concrete masonry wing walls that will be up to 8 feet high and supported on continuous footings that will be 5 feet wide. Furthermore, TEC proposes to support these walls on footings that are 1-foot-thick supported on a 2-foot-thick layer of crushed gravel or stone (i.e., MassDOT Type a Gravel Borrow for Bridge Foundations) overlying the existing fill in the embankments.

2 SUBSURFACE EXPLORATION PROGRAM

TRC's subsurface exploration program consisted of two soil borings (BB-1 and BB-2) in the roadway embankment as close as practicable to the South and North Abutments, respectively. The borings were drilled advanced to depths of 32 and 34 feet, respectively, (i.e., Elevations 41.06 and 39.71, respectively) between July 7 and July 10, 2017. The approximate boring locations were pre-established by TRC and the Site was cleared for underground utilities by member utilities notified by Dig Safe. Locations of the TRC borings are shown on **Figure 2**. The subsurface profile for the site is shown in **Figure 3**.

Drilling services were provided by GeoSearch, Inc. of Sterling, Massachusetts under contract to TRC. Borings were advanced with a 55-LC track-mounted drill rig using hollow stem auger drilling methods.

Standard Penetration Testing (SPT) split spoon sampling was typically performed five-foot intervals thereafter in general accordance with the SPT procedure described in American Society of Testing and Materials (ASTM) Standard D1586 to comply with MassDOT standards. This sampling procedure involves driving a standard, 2-inch outer diameter (OD) split-barrel sampling spoon (i.e., split-spoon) over a two-foot interval using a 140-pound weight falling 30 inches and the N-value for each "field" SPT was recorded[5]. An automatic hammer was used to drive the split spoon samplers.

Soil samples collected with the split-spoon sampler were visually examined by TRC and classified in general accordance with the MassDOT soil classification procedure. Soil descriptions, blow counts, changes in stratigraphy, split-spoon penetration, sample recovery, observations of soil moisture content, and approximate depth to groundwater were used to develop the boring logs. Changes in stratigraphy were identified based on changes in drilling rates and/or other observations noted during drilling.

5 N value is the number of blows required to drive the SPT spilt spoon sampler one foot into the soil after seating it 0.5 feet into the soil. Note, the boring logs show the blow counts require to drive the SPT spilt spoon sampler for each 6-inch interval and the N-value is the sum of the blows for the second and third 6-ich intervals.

Definitions for the terms used to describe the soils are provided in **Appendix B** and logs for the borings are provided in **Appendix C**.

3 SITE CONDITIONS

3.1 Regional Geology

According to available geological data, the Site is generally underlain by Silurian to Ordovician rock of the Berwick Formation in the Merrimack Group. According to Castle et al.[6] the bedrock consists of:

> *Light-gray to purplish-gray beds from inches to several feet thick of calcareous metasiltstone, biotite-feldspar-quartz granofels, impure quartzite and metasiltstone interbedded with lesser amounts of thin-bedded dark-gray micaceous phyllite, schist and impure quartzite.*

Overlying the bedrock, there is a layer of urban fill and underlying the fill the soils appear to be glacial soils, such as glacial kame, kame terrace, and/or kame plains deposits.[7] The kame, kame terrace, and/or kame plains deposits primarily consist of sands and fine gravel with cobbles and boulders.

3.2 Subsurface Conditions

Subsurface conditions generally consist of fill over natural soils (i.e., glacial deposits, such as glacial kame, kame terrace, and/or kame plains deposits) overlying bedrock, which are described below. Subsurface conditions encountered in the borings are summarized below and shown on **Figure 3**. The blow counts for the soil layers, normalized for hammer energy and overburden stress (i.e., $N_{1,60}$), are presented in **Appendix E**.

3.2.1 South Abutment

Soils encountered in boring BB-1 consisted of approximately 18 feet of existing fill material consisting of very loose to medium dense fine to coarse sand with trace amounts of gravel and silt, with varying amounts of glass, ash, slag, and roots overlying very loose to dense fine to coarse sand with trace amounts of silt that graded to medium dense to dense sand with some amounts of silt and gravel (i.e., glacial soils) to the termination depth of the boring at 32 feet.

[6] Castle, R.O, Hepburn, J.C., and Kopera, J.P., Bedrock geologic map of the Lawrence quadrangle, Massachusetts, v 1.0, Massachusetts Geologic Survey (4th), (in review, April 2005).

[7] Castle, R.O. 1958. Surficial geology of the Lawrence quadrangle, Massachusetts-New Hampshire: U.S. Geological Survey Geologic Quadrangle Map GQ–107, scale 1:31,680 https://pubs.er.usgs.gov/publication/.

3.2.2 North Abutment

Soils encountered in boring BB-2 consisted of approximately 18.2 feet of existing fill material consisting of very loose to loose sand with generally trace amounts of gravel and silt, with varying amounts of glass, ash, slag, and roots, overlying very soft to stiff organic silt and fine sand from 18.2 to 25 feet bgs, overlying dense fine to coarse sand with trace amounts of silt (i.e., glacial soils) to the termination depth of the boring at 34 feet.

3.3 Groundwater

Groundwater was observed to be at 17 feet bgs at both borings BB-1 and BB-2, which corresponds to approximately Elevation 57 feet. It should be noted that groundwater levels can fluctuate with season and precipitation and may be different during construction.

3.4 Soil Testing

Representative soil samples collected from the TRC borings were tested to determine soil properties (e.g., moisture content, grain size analysis, and Atterberg limits) by the TRC's soils testing laboratory in Mt. Laurel, New Jersey. Laboratory testing results are presented in **Appendix D**. and field soil testing (i.e., blow counts) are presented on the boring logs in **Appendix C** and in the normalized blow count calculations in **Appendix E**.

4 Geotechnical Considerations

The primary geotechnical considerations for this bridge are:

- **Limited Information on Existing Foundations** – The type and depth of the foundations for existing abutments and wing walls is unknown. TRC understands TEC is assuming the existing abutments and wing walls are supported on shallow foundations with a bottom elevation of 58.3 for stability analyses. The abutments were approximately 41.83 and 45.83 feet for the South and North Abutments, respectively; TRC should be provided the opportunity to re-evaluate the foundations if additional information is obtained in the future.

- **Organic Silt Layer** – An organic silt layer was encountered in boring BB-2 approximately 18.2 to 25 feet bgs (i.e., elevation 55.51 to 48.71 feet). This material would be considered unsuitable for support of shallow foundations and would likely have resulted in significant post-construction consolidation settlement due to the increased embankment and foundation loads. The North Abutment appears to be in good condition with no evidence of settlement suggesting the organic silt is not present directly below the footing (e.g., the layer was removed and replaced) or the North Abutment is supported on deep foundations through the organic silt layer. However, post-construction consolidation settlement may occur under parts of the north embankment due to raising the grade northward from the North Abutment.

4.1 Geotechnical Engineering Recommendations

Based on TRC's limited subsurface exploration program, soil properties and strength parameters provided in **Table 1**, below, were used for geotechnical analyses.

Table 1: Design Soil Properties

Property	Existing Fill	Organic Silt	Proposed Structural Fill	Glacial Soils
Dry Unit Weight (pcf)	95	90	115	115
Moist Unit Weight (pcf)	105	97	120	120
Saturated Unit Weight (pcf)	120	105	125	125
Friction Angle (ϕ, degrees)	30	0	32	32
Cohesion (psf)	0	500	0	0

Notes: *pcf – pounds per cubic foot; psf – pounds per square foot*

4.1.1 Foundation Description

4.1.1.1 Existing Abutment Footings

The bridge designer (TEC) provided drawings for the replacement bridge, which included the type of foundation to be used. Specifically, the existing shallow foundations (i.e., footings) will be reused to support the abutments for the proposed replacement bridge. TRC calculated the anticipated foundation loads on the abutments considering the anticipated bridge geometry for the pedestrian bridge. The final design for bridge abutments shall be based on the recommended factored bearing resistance and estimated foundation settlements that were evaluated based on the engineering analyses by TRC.

Based on the information provided by TEC, the existing granite block shallow foundations for the bridge abutments are 10 feet wide according to a note on the historic drawings by approximately 42 feet and 46 feet for the South and North Abutments, respectively. The dimensions were determined from the existing historic drawings or estimated from measurements from the existing historic drawings; however, these drawings do not provide complete information and elements, such as depth below the ground surface, connections, etc., were not presented.

4.1.1.2 Existing Wing Wall Footings

The bridge designer (TEC) provided drawings for the replacement bridge that indicated some of the existing wing walls will be retained. The existing wing walls were assumed to be supported on shallow foundations (i.e., footings) that were assumed to bear on natural undisturbed granular soils (i.e., glacial soils) and deleterious materials underlying the foundations had been removed. TRC calculated the anticipated foundation loads on the existing wing walls considering the anticipated grade elevation increase.

Based on the information provided by TEC, the existing granite block shallow foundations for the existing wing walls varied from approximately 4.5 to 6.5 feet wide at the ends to 6.2 to 9

feet wide at the bridge abutments and the lengths varied from approximately 12.5 feet to approximately 23.5 feet. As with the abutment foundations, dimensions and other information for the wing wall foundations was not complete.

4.1.1.3 Proposed Concrete Masonry Wing Wall Footings

TEC proposed using concrete masonry wing walls to extend the existing wing walls. The proposed wing walls are expected to be supported on shallow foundations bearing on two feet of compacted structural fill placed over the natural undisturbed existing fill. TRC calculated the anticipated foundation loads on the proposed wing walls considering the anticipated grade elevation increase. The final design for wing walls footings shall be based on the recommended factored bearing resistance and estimated foundation settlements that were evaluated based on the engineering analyses by TRC.

Proposed new wing walls will be supported on cast-in-place concrete continuous spread footings that are 5 feet wide. For the proposed wing walls, footings will be subjected to normal loads and pressures and to lateral loads from the retained existing fill soils.

Shallow foundations for the proposed new wing walls should bear a minimum of two feet of structural fill placed on natural undisturbed soil or existing fill. A geotextile separation layer should be placed on the existing material surface prior to placing the structural fill. If organic soils, soft soils, or other deleterious materials are encountered at footing elevation these materials should be over-excavated a minimum of one foot and replaced with compacted structural fill. The structural fill should consist of compacted Gravel Borrow (MassDOT M1.03.0, Type a, Gravel Borrow), as described in **Section 5.1**.

4.1.2 Bearing Resistance and Settlement

In general accordance with the LRFD-BDS, TRC performed bearing resistance and settlement analyses (i.e., strength limit state and service limit state analyses, respectively) to calculate the factored bearing resistances for the existing abutment and wing wall footings and the proposed wing wall footings. These calculations are attached in **Appendix E**.

These analyses were performed considering the foundation's types and sizes described above. In accordance with the LRFD-BDS, TRC recommends a resistance factor, ϕ_b of 0.45 for the Strength Limit State (bearing resistance) analysis and Service Limit State load analysis was calculated for 1-inch of settlement, based on a resistance factor, ϕ_b of 1.0.

The factored bearing resistance was calculated using the LRFD-BDS Equation 10.6.3.1.1-1. Based on the foundation soils being cohesionless, immediate (i.e., elastic) settlement analyses were performed for the existing and proposed footings using the Hough Method as described in LRDF-BDS Article 10.6.2.4.2b. The preliminary factored bearing resistances are summarized in **Table 2**.

Table 2: Summary of Bearing Resistances

Strength Limit State	Factored Bearing Resistance (ksf) (LRFD-BDS Eq. 10.6.3.1.1-1)	
Existing North and South Abutments	$q_R = q_n * \phi_b =$	**7.2**
Existing Wing Walls	$q_R = q_n * \phi_b =$	**8.1**
Proposed Concrete Masonry Wing Walls	$q_R = q_n * \phi_b =$	**11.3**

The NCHRP report No. 107 "Shallow Foundations for Highway Structures", dated 1983, as and the FHWA report (FHWA-RC/TD-10-001, "Selection of Spread Footing on Soils to Support Highway Bridge Structures", revised December 2017) indicated that angular distortion (differential settlements) of 1/250 and vertical movements of 2 to 4 inches depending on the span length appear to be acceptable. For this bridge structure, the soils that were encountered on both sides of the bridge show similarity in formation and consistency (density and strength). As such, differential settlements are estimated to be within allowable limits.

New footings bearing on soil should be constructed a minimum of four feet below the exposed ground surface (both laterally and vertically) to provide frost protection. Soil properties and groundwater levels featured in the analyses were developed using engineering judgment based on field measurements and soil classifications in addition to laboratory test results assuming the subgrade is prepared in accordance with the **Section 5.1**, below.

4.1.3 Overturning and Sliding

Foundations also need to be designed for sliding and overturning using the appropriate performance factors. The overturning analyses should indicate that the location of the resultant for overturning should be in the middle two-thirds of the footing (i.e., the maximum eccentricity of the loads should be less than one-third of the corresponding footing dimension). Sliding analyses should be performed in accordance with LRFD-BDS Section 10.6.3.4. The factored resistance against failure by sliding should be based on $R_R = \varphi_T R_T + \varphi_{ep} R_{ep}$ (LRFD-BDS Eq. 10.6.3.4-1).

The recommended resistance factor (ϕ_{ep}) for passive resistance should be 0.50, based on LRFD-BDS Table 10.5.5.2.2-1. The footing will be supported on crushed rock, so the factored resistance against failure by sliding (R_T) should be as follows:

$R_T = V \times C \tan\phi_f$,

Where V is the factored normal load and ϕ_f is the angle of internal friction for the glacial soils and structural fill was 32°. The value for C should be 0.8 for the granite blocks or precast concrete footings and C should be 1.0 for the proposed cast-in-place concrete footings for the proposed concrete masonry wing wall footings

(LRFD-BDS Section 10.6.3.4 and Table 10.5.5.2.2-1). TRC recommends using the ϕ_τ value for shear resistance between sand and concrete.

Using the angle of internal friction, ϕ_f, for the structural fill was considered to be conservative and lower than the value of ϕ_f for crushed rock. The value for V is the total vertical force on the footings.

If fill needs to be placed behind the abutments or wing walls, TRC recommends placing structural fill. Abutment and wing wall backfill should be designed to drain, and therefore, be analyzed assuming that hydrostatic pressure will not be applied to these structures. Note, the design earth pressure coefficient assumes level backfill behind the abutments. The recommended earth pressure coefficients for the existing and proposed structural are summarized in **Table 3**.

Table 3: Earth Pressure Coefficients

Property	Existing Fill	Proposed Structural Fill
At Rest Earth Pressure, k_o	0.50	0.47
Active Earth Pressure, k_a	0.30	0.28
Passive Earth Pressure, k_p	5.05	5.35

4.1.4 Embankment Settlement

The proposed pedestrian bridge design indicates the existing embankment grade will be raised by up to 4 feet. Based on the weight of the soil (assumed to be the proposed structural fill) needed to raise the grade the increase in the net load is expected to be approximately 0.48 ksf. Note, the increase in load assumed that the total loads from the proposed pedestrian bridge are similar to the total loads from the former railroad bridge. The calculated immediate settlements summarized in **Table 4**.

Table 4: Summary of Settlements Due to Increased Grade Height
(Settlements Determined by Hough Method LRDF-BDS Article 10.6.2.4.2)

Location	***Normal Dead Loads (ksf)*** *(Soils and Abutments/Walls, Only)*	***Settlement (Inches)***
North Abutment	*4.23*	*0.08*
South Abutment	*4.25*	*0.07*
Existing Wing Walls	*2.4*	*0.12*
Proposed Wing Walls	*1.73*	*0.12*

There may also be concerns about consolidation of the organic silt identified in at the North Abutment in boring BB-2. An aggregate total of approximately 3 inches of post-construction settlement of the embankment north of Manchester Street could occur due to the placement of up to 4 feet of structural fill to raise the embankment grades,

assuming the organic silt layer extended beneath the entire embankment. The estimate consolidation included settlements of approximately 1.91 inches from primary consolidation within approximately 33 days of placing the fill and an additional 1.05 inches of secondary compression over 30 years (see calculations in **Appendix E**). However, TRC expects settlements of the North Abutment and existing wing walls will be negligible because minimal distress in these structures was observed and the organic silt layer was not considered to extend beneath the existing embankment; settlements under the new wing walls was also expected to be negligible if unsuitable soils are removed prior to construction, as described in **Section 5**.

Concerns about excessive settlements from the organic silt layer may also be mitigated by using geofoam to replaced up to approximately 3 feet of the soil need to raise the grades. If geofoam is used raise the grades, the total settlement was estimated to be 1.6 inches: 0.56 inches of primarily consolidation and 1.05 inches of secondary compression over 30 years.

The consolidation analysis was based on the soil information from one boring (boring BB-2) advanced behind (i.e., north of) the North Abutment, so the extent of the soft organic layer, and therefore the extent of the zone of settlement could not be estimated. Also, the geometry of the soft organic layer could not be determined. If the soft soils were in an old drainage or stream channel that had relatively steep sides, this could result in more of an abrupt transition (i.e., a "lip") between the embankment and the abutment; however, if the layer tapered into the surrounding soils (such as from covering soft soils displaced when the abutment was constructed), it would be expected to result in a smoother and much less abrupt transition.

TRC recommends additional investigation to determine the extent of the organic silt layer, as described in **Section 5.7**.

4.1.5 Seismic Design

In general accordance with LRFD-Seismic, Article 3.4, the seismic ground shaking hazards were characterized using the online AASHTO-2009 web service modeling developed by the U.S. Geological Survey (USGS) (AASHTO-2009 Web Service Documentation (usgs.gov)). Note, LRFD-Seismic, Article 1.2 states that the USGS prepared maps with seismic design parameters and a ground motion software tool. Although LRFD-Seismic states the software tool was packaged as a CD-ROM provided with this Guide, the CD was not provided with the electronic copy of LRFD-Seismic and the USGS online ground motion software tool was used. The results from the software tool were consistent with the values indicated maps in LRFD-Seismic Figures 3.4.1-2a through 3.4.1-4b.

The average SPT N value (N Bar) for the North Abutment was used to determine the Site Class for input for the analysis. Based on the methodology described LRFD-Seismic, Article

3.4.2.3, N Bar value for the North Abutment was 13 blows per foot and the average undrained shear strength, S_u Bar, was 0.5 kips per square foot. The N Bar and the S_u Bar correspond to Site Class E (LRFD-Seismic, Table 3.4.2.1-1). The analysis output is presented in **Appendix D** with the documentation describing the USGS ground motion software tool.

Based on the USGS AASHTO-2009 web service ground motion software tool analysis, the expected ground motions were as follow:

- Potential Horizontal Ground Acceleration, PGA: 0.089g [8]
- Site coefficient for peak ground acceleration, F_{pga} = 2.5
- Design peak ground acceleration, $A_s = F_{pga}$ PGA = 0.222g
- 0.2 Second Spectral Acceleration Coefficient, S_s= 0.174g
- Site coefficient for 0.2 second spectral acceleration, F_a = 2.5
- Design short-period (0.2-second) spectral acceleration, $S_{DS} = F_a S_S$ = 0.435
- 1.0 Second Spectral Acceleration Coefficient, S_1= 0.04g
- Site coefficient for 1.0 second spectral acceleration, F_v = 2.4
- Design 1-second spectral acceleration, $S_{D1} = F_v S_1$ = 0.148
- Seismic Design Category, SDC = A

The recommended seismic design parameters are summarized in **Table 5**.

Table 5: Recommended Seismic Design Parameters

Seismic Design Parameter	Coefficient / Value
Design peak ground acceleration, A_s	0.222g
Design 0.2-second spectral acceleration, S_{DS}	0.435g
Design 1-second spectral acceleration, S_{D1}	0.148g
Site Class (based on existing fill)	E
Seismic Design Category, SDC	A

4.1.5.1 Liquification Potential

The SDC is A, so a liquefaction analysis was not required, although the existing fill soils in the existing railway embank behind the bridge abutments (i.e., to a depth of approximately 18 feet bgs) had N Bar values of 3.2 and 5.9 for the North and South Abutments, respectively. Furthermore, these soils are not below the groundwater table, so liquification potential for these soils was considered to be low. See **Appendix E** for the calculations of the N Bar values.

[8] g = units of gravitational acceleration.

The glacial soils below the abutment and wing wall footings (i.e., below depths of approximately 18 feet bgs or approximately elevation 56 feet) had an N Bar value of 37.3 and 22.0 for the North and South Abutments, respectively, and a combined (overall) N Bar value of 27. Therefore, the liquification potential for these soils was considered to be low, even though these soils are below the groundwater table.

The potential for other issues related to earthquake-induced vibrations, such as strain softening of the organic silt layer, are considered low. Specifically, the organic silt is expected to consolidate under the increased soil load for raising the embankment elevation, as noted above, which will increase the shear strength of this layer.

5 Construction Recommendations

5.1 Earthwork

The following recommendations are provided based on the Site soils encountered.

Existing subsurface utilities, if present, which conflict with the proposed development should be removed or relocated. In areas of backfill placement and/or construction of shallow foundations, all topsoil and organic soils (i.e., organic silt) or otherwise deleterious material should be removed before foundation construction or new fill placement. Any obstructions that would interfere with new foundation construction must be removed in their entirety from a foundation location. Loose or unstable areas identified during excavation should be densified in-place or excavated and replaced with compacted structural fill.

The glacial soils may contain variable amounts fines (silt) content, but may be reused as structural fill if it meets the criteria described below. Any material, such as topsoil or organic silt, that contains organic materials should be excluded from reuse in compacted backfills. Once a subgrade has been prepared, construction traffic should be controlled in such a fashion as to minimize subgrade disturbance.

As per Division II, Section 100, Subsection 150 of the Massachusetts Highway Department (MassDOT) Standard Specifications for Highways and Bridges, 2022 edition (Standard Specifications), imported structural fill, if required, should consist of well-graded granular material that meets the gradation criteria for MassDOT Item M1.03.0, Gravel Borrow, Type a (MassDOT Type a Gravel Borrow). The proposed structural fill shall not be excessively moist; shall be free from ice and snow, roots, surface coatings, sod, loam, clay, rubbish, elastic or foreign matter, and/or other deleterious or organic matter, and shall be adequately graded for satisfactory compaction into a stabilized soil structure. The MassDOT Type a Gravel Borrow shall conform to the gradation requirements in **Table 6**.

Table 6: MassDOT M1.03.0-1 Type a Gravel Borrow for Bridge Foundations

Sieve Size	Percent Passing by Weight
6-inch*	100
¾-inch	70
½-inch	50-85
No. 4	40-75
No. 50	8-28
No. 200	0-10

* Maximum nominal particle size per Standard Specifications

Backfills and fills should be placed in layers not exceeding 8 inches loose thickness. This criterion may be modified in the field depending on the conditions present at the time of

construction and on the compaction equipment used. Load-bearing fills for the support of foundations should be compacted to not less than 98% of maximum dry density as determined by ASTM D698 (ASTM 2021). Fills in paved areas, if planned, should be compacted to not less than 95% of maximum dry density. Fills in landscaped areas should be compacted to at least 90% of maximum dry density.

5.2 Temporary Excavation Support

Confined excavations deeper than four (4) feet in soil may be required for construction activities, in which case side walls of such excavations must be sloped, benched, or adequately shored per OSHA 29 CFR 1926 regulations. The site soils and fill are classified as OSHA Type C – granular soil or low cohesive strength soil. Open excavations above the groundwater table in the natural soils should not be steeper than 1.5 horizontal on 1 vertical (1.5H:1V). Trench boxes and/or sheeting may be used in conjunction with open cut slopes to permit access to confined excavations. Temporary excavation support systems should be designed by an experienced Massachusetts Professional Engineer.

5.3 Groundwater Management and Considerations

Groundwater was encountered in both borings, but seasonal high groundwater at the Site is expected to vary and perched water may be encountered within the existing abutments. Thus, excavations for foundations in soils at the Site may encounter groundwater. When groundwater is encountered concrete placement in excavation may need to be conducted using tremie pipes or other methods to fill the foundation forms upwards from the bottom of the excavation.

5.4 Surface Drainage

Positive surface water drainage gradients at least 2 percent should be provided to direct surface water away from foundations towards suitable discharge facilities. Ponding of surface water should not be allowed on or adjacent to excavations, structures, slabs-on-grade, or pavements. Any rain runoff should be directed away from foundation, if applicable. Downspouts if used may discharge onto splash-blocks provided the area is covered with concrete slabs or asphalt concrete pavements.

5.5 Protection of Adjacent Structures

There appear to be several utilities that may be in conflict with the proposed construction, including utility poles, overhead wires, sewer/stormwater, and fiber optic lines. Utilities should be protected or relocated during excavation as needed. All underground utilities should be relocated outside of the zone of influence of footings if identified. Overhead wires and their supporting poles are in conflict with the proposed work and should be protected or relocated during construction.

5.6 Reuse of Excavated Soils

Based on borings BB-1 and BB-2, the majority of the soils to be excavated in this area will be embankment fill material consisting of sand with minor amounts of silt and gravel. It is anticipated that this material should not be reused due to the deleterious materials in the existing fill.

Removal of the existing railroad tracks and associated structures should be coordinated and performed in accordance with MA DEP policies and regulations.

5.7 Recommendations for Further Investigation

At this time, the depth and type of foundations for the existing railroad bridge abutments and wing walls are unknown. Based on boring BB-2, a compressible layer of organic silt may be present below the approach embankment for the North Abutment and this layer may be unsuitable for support of shallow foundations even though the existing abutment appears to be stable.

If additional information on subsurface conditions (e.g., the extent of the organic silt layer) and foundation construction is desired, TRC recommends that test pits, additional borings, hollow-stem auger probes, and/or geophysics be considered. If successful, test pits excavated in front of the abutments can provide information on the footing construction and possibly bearing soil types. Additional geotechnical borings or hollow-stem auger probes in front of and behind the existing North Abutment may provide additional information on the extent of the organic silt layer that may be used in combination with additional laboratory testing (if boring are advanced), to evaluate stability and settlement of the North Abutment and embankment.

6 GENERAL COMMENTS/LIMITATIONS

The analysis and recommendations presented in this report are based solely upon the data obtained from the boring locations, which are shown on **Figure 2**, as well as from published information. This report does not reflect variations that may occur between boring locations or due to modifying effects of weather or man-made disturbances. The nature and extent of such variations may not become evident until during or after construction. If variations are identified, further evaluation should be performed and supplemental recommendations may be warranted.

The work performed for this report does not include environmental assessment of the Site or delineation of contaminated soils or groundwater by TRC.

We have prepared this report for use by TEC specifically and solely to provide geotechnical recommendations for the design and construction of the project identified in **Section 1.2** of this report.

This work has been done in accordance with our authorized scope of work and in accordance with generally accepted practice in the fields of geotechnical and foundation engineering. Our calculations were based on uncertain foundation geometry and shape and uncertain soil conditions and subject to verification by additional borings. Therefore, the results should be considered preliminary and subject to revision. This warranty is in lieu of all other warranties either expressed or implied. Our conclusions and recommendations are based on the data revealed by this investigation. We are not responsible for any conclusions or opinions drawn from the data included herein, other than those specifically stated, nor are the recommendations presented in this report intended for direct use as construction specifications. This report is intended for use with regard to the specific project discussed herein and any changes in loads, structures, or locations should be brought to TRC's attention so that we may determine how they may affect our conclusions. An attempt has been made to provide for normal contingencies, but the possibility remains that unexpected conditions may be encountered during construction. If this should occur, or if additional or contradictory data are revealed in the future, we should be notified so that modifications to this report can be made, if necessary. If we do not review the relevant construction documents and witness the relevant construction operations, then we cannot be responsible for any problem, which may arise, from the misunderstanding or misinterpretation of this report or failure to comply with our recommendations.

FIGURES

Figure 1: **Site Location Map**

Figure 2: **Boring Location Map**

Figure 3: **Subsurface Profile**

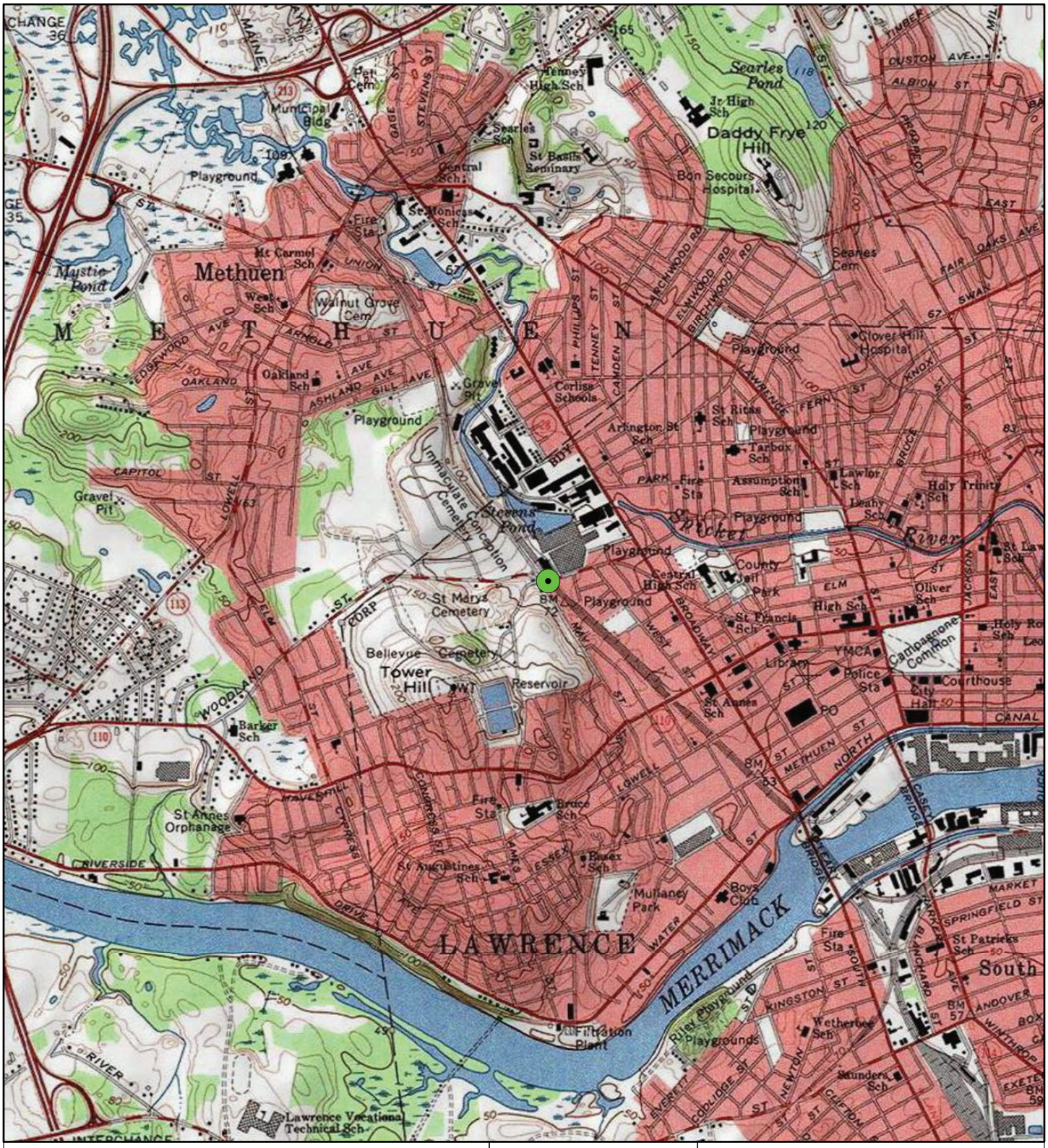

TRC
Wannalancit Mills
650 Suffolk Street
Lowell, MA 01854
978-970-5600

MASSDOT
B&MRR BRIDGE OVER
MANCHESTER ST.
BRIDGE NO. L-04-030 (8JA)
LAWRENCE, MASSACHUSETTS

FIGURE 1	August 2021

R:\Projects\GIS_2018\246949_Lawrence_Rail_trail\mxd\Fig 1 LawrenceRailTrail_Locus_20190110.mxd

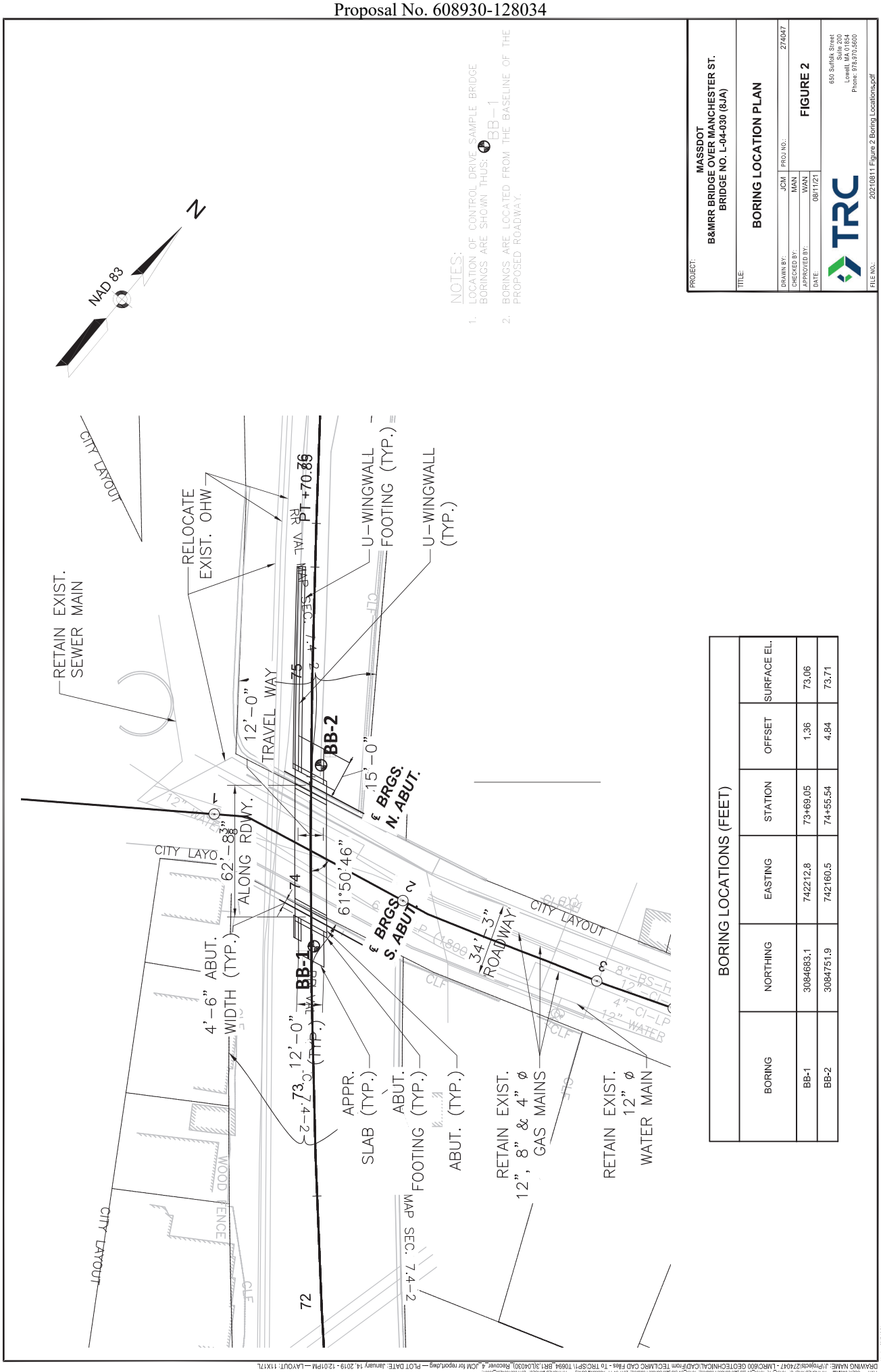

BORING LOCATIONS (FEET)

BORING	NORTHING	EASTING	STATION	OFFSET	SURFACE EL.
BB-1	3084683.1	742212.8	73+69.05	1.36	73.06
BB-2	3084751.9	742160.5	74+55.54	4.84	73.71

PROJECT:
MASSDOT
B&MRR BRIDGE OVER MANCHESTER ST.
BRIDGE NO. L-04-030 (8JA)

TITLE:
BORING LOCATION PLAN

DRAWN BY:	JCM	PROJ NO.:	274047
CHECKED BY:	MAN		
APPROVED BY:	WAN		FIGURE 2
DATE:	08/11/21		

TRC
650 Suffolk Street
Suite 200
Lowell, MA 01854
Phone: 978.970.5600

FILE NO.: 20210811 Figure 2 Boring Locations.pdf

DRAWING NAME: J:\Projects\274047 - LMRC\600 GEOTECHNICAL\CAD\From TECLMRC CAD Files - To TRC\SP1\ T0694_BR1.3\L04030J_Recover_4_JCM for report.dwg — PLOT DATE: January 14, 2019 - 12:01PM — LAYOUT: 11X17L
TEXT — USER: MAHall — ATTACHED XREFS: 1934.Pat, 1934_SV 0D Int Survey Features, 1934_SV 0D Int Survey Surface Features, 20120-11 - Alignment Survey — ATTACHED IMAGES: 20170000000429.jpg;
Version: 2019-Feb01

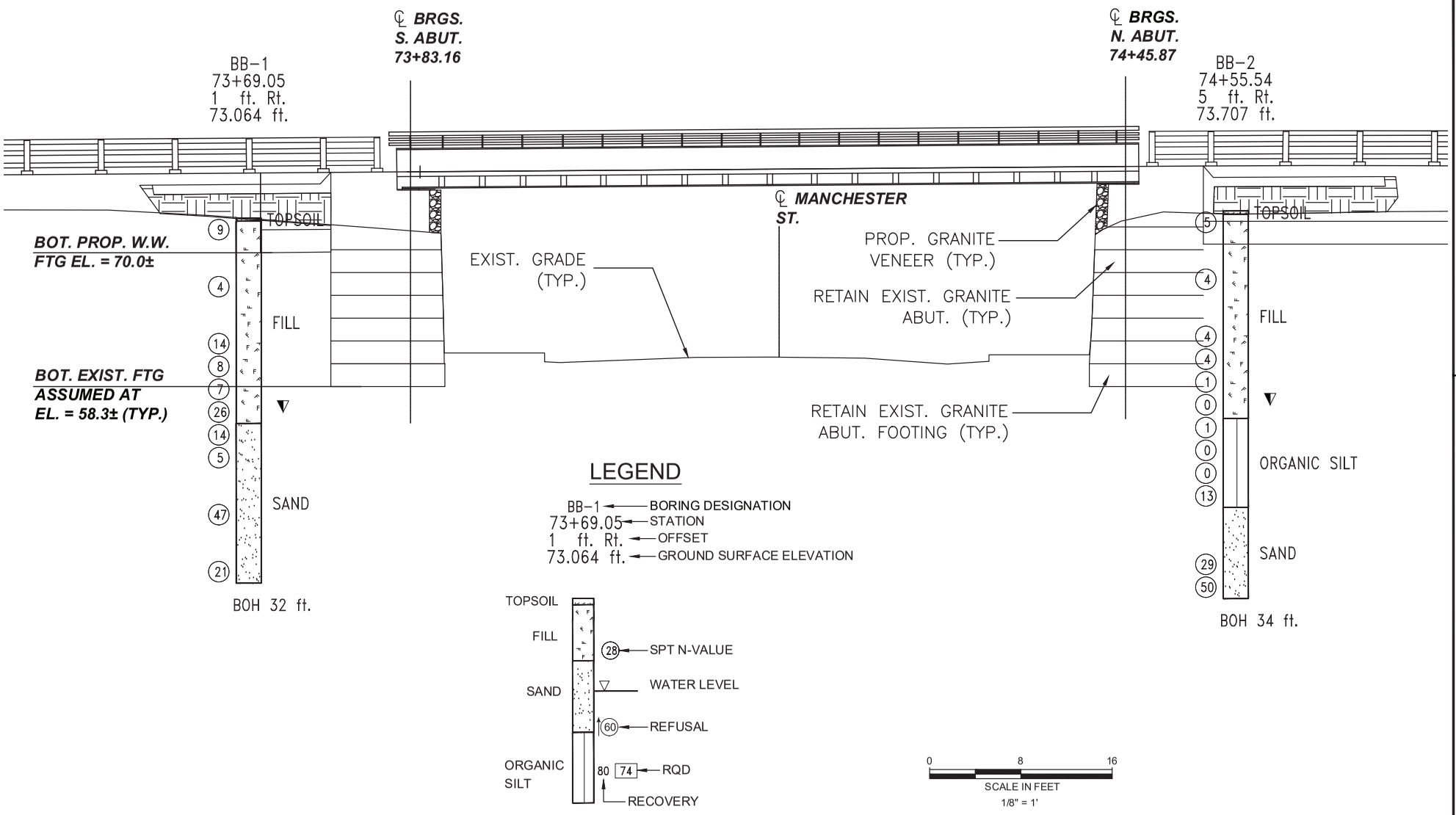

MASSACHUSETTS DEPARTMENT OF TRANSPORTATION
HIGHWAY DIVISION
10 PARK PLAZA BOSTON, MASS

TRC
650 Suffolk Street
Suite 200
Lowell, MA 01854
Phone: 978.970.5600

PROJECT:
MASSDOT
B&MRR BRIDGE OVER MANCHESTER ST.
BRIDGE NO. L-04-030 (8JA)

TITLE:
SUBSURFACE PROFILE

DRAWN BY:	JCM
CHECKED BY:	SS
APPROVED BY:	WAN
DATE:	8/11/21
PROJ. NO.:	274047
FILE:	20210811 Figure 3 Subsurface Profile.pdf

FIGURE 3

11x17 --- USER: Mufeli --- ATTACHED XREFS: Prefix: --- ATTACHED IMAGES:
DRAWING NAME: J:\Projects\274047 - LMRC\600 GEOTECHNICAL\CAD\From TEC\2019_02_01\LMRC CAD FILES 2-1-19 working 2-1-19.dwg --- PLOT DATE: February 04, 2019 - 1:39PM --- LAYOUT: 11X17L
Version: 2017-10-21

Appendix A
Historical Drawings

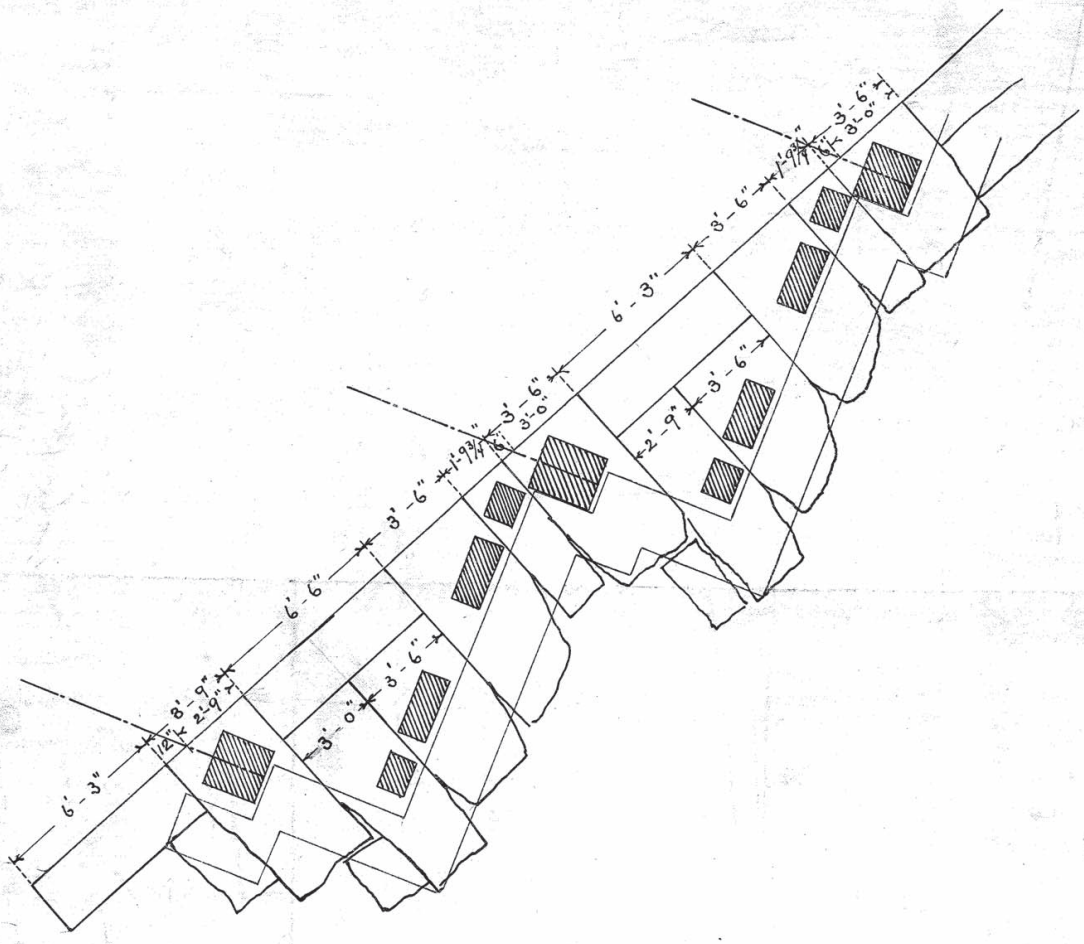

Manchester St. Bridge
Lawerence Mass.
Detail of Bridge Seat Course
Scale 1/4 in. = 1 ft. Jan. '96
Gross dimensions, no allowance for joints.

Dist. 16	Parcel 3
Rte 1	Plan 20

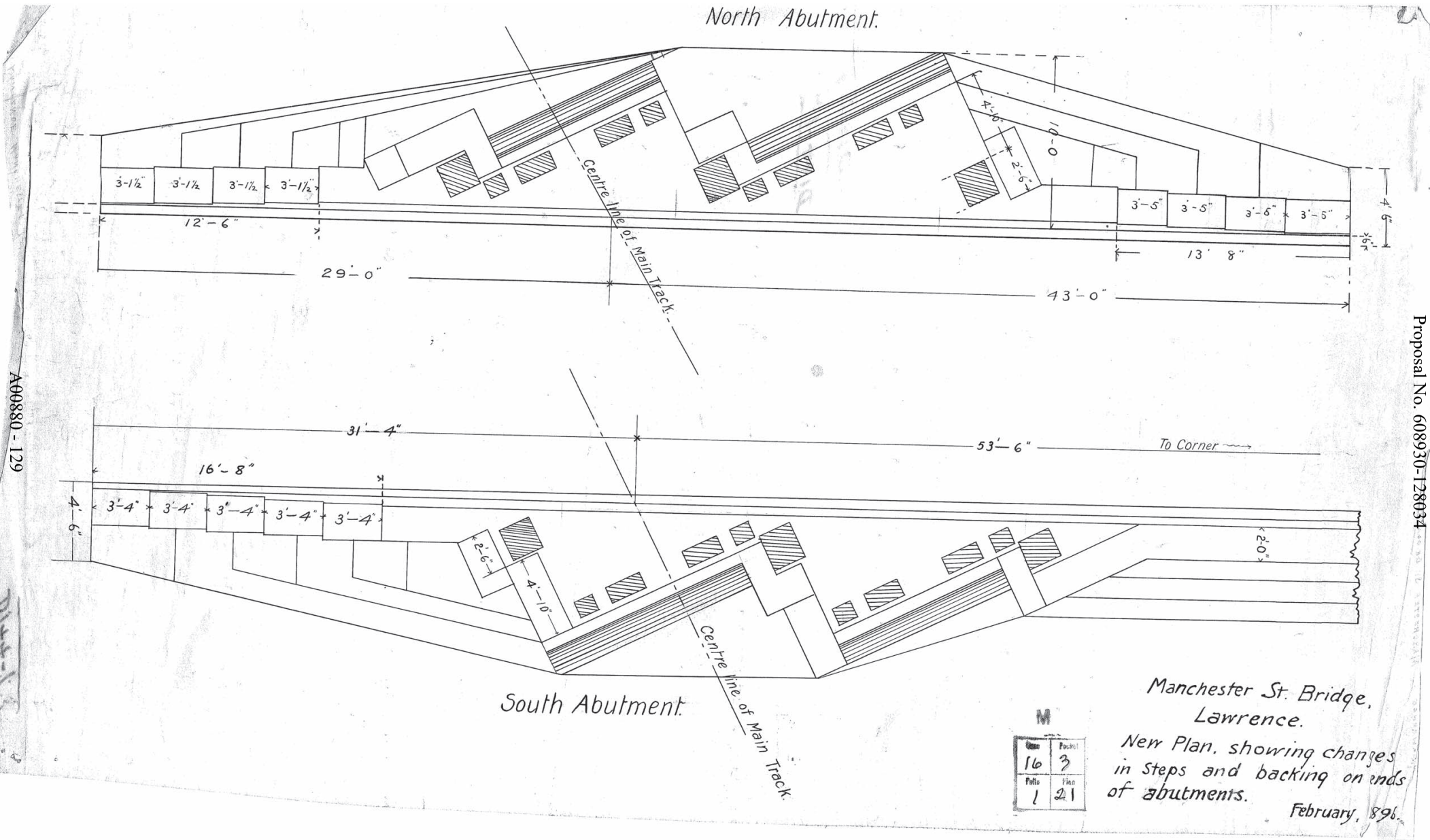

Case	Packet
16	3
Folio	Plan
1	21

Manchester St. Bridge, Lawrence.

New Plan, showing changes in Steps and backing on ends of abutments.

February, 896.

A00880-129

Proposal No. 608930-128034

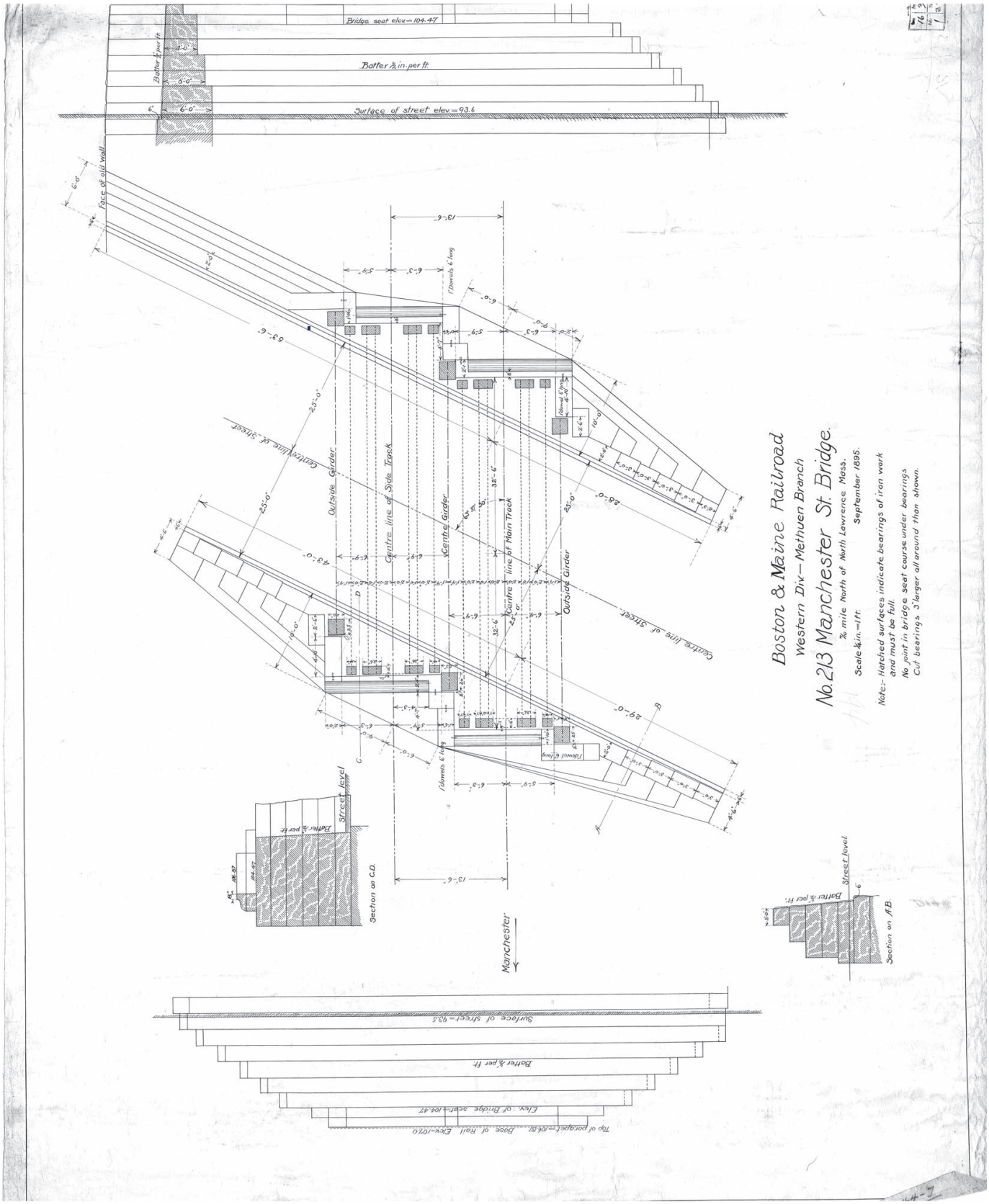
Bridge seat elev = 104.47
Batter ½ in. per ft.
Surface of street elev = 93.6
Face of old wall
Centre line of street
Outside Girder
Centre line of Side Track
Centre Girder
Centre line of Main Track
Outside Girder
Centre line of Street
Section on C.D.
Section on A.B.
Street level
Manchester
Boston & Maine Railroad
Western Div—Methuen Branch
No. 213 Manchester St. Bridge.
¾ mile North of North Lawrence Mass.
Scale ¼ in. = 1 ft.
September 1895.
Note:- Hatched surfaces indicate bearings of iron work and must be full.
No joint in bridge seat course under bearings.
Cut bearings 3" larger all around than shown.

Appendix B
Definition of Terms

DEFINITION OF TERMS

PRIMARY DIVISIONS			SOIL TYPE		SECONDARY DIVISIONS
COARSE GRAINED SOILS (MORE THAN HALF OF MATERIAL IS LARGER THAN NO. 200 SIEVE SIZE)	GRAVELS (MORE THAN HALF OF COARSE FRACTION IS LARGER THAN NO. 4 SIEVE)	CLEAN GRAVELS (Less than 5% Fines)	GW		Well graded gravels, gravel–sand mixtures, little or no fines
			GP		Poorly graded gravels or gravel–sand mixtures, little or no fines
		GRAVEL WITH FINES	GM		Silty gravels, gravel–sand–silt mixtures, plastic fines
			GC		Clayey gravels, gravel–sand–clay mixtures, plastic fines
	SANDS (MORE THAN HALF OF COARSE FRACTION IS SMALLER THAN NO. 4 SIEVE)	CLEAN SANDS (Less than 5% Fines)	SW		Well graded sands, gravelly sands, little or no fines
			SP		Poorly graded sands or gravelly sands, little or no fines
		SANDS WITH FINES	SM		Silty sands, sand–silt–mixtures, non–plastic fines
			SC		Clayey sands, sand–clay mixtures, plastic fines
FINE GRAINED SOILS (MORE THAN HALF OF MATERIAL IS SMALLER THAN NO. 200 SIEVE SIZE)	SILTS AND CLAYS (LIQUID LIMIT IS LESS THAN 50 %)		ML		Inorganic silts and very fine sands, rock flour, silty or clayey fine sands or clayey silts with slight plasticity
			CL		Inorganic clays of low to medium plasticity, gravelly clays, sandy clays, silty clays, lean clays
			OL		Organic silts and organic silty clays of low plasticity
	SILTS AND CLAYS (LIQUID LIMIT IS GREATER THAN 50 %)		MH		Inorganic silts, micaceous or diatomaceous fine sandy or silty soils, elastic silts
			CH		Inorganic clays of high plasticity, fat clays
			OH		Organic clays of medium to high plasticity, organic silts
HIGHLY ORGANIC SOILS			PT		Peat and other highly organic soils

PARTICLE SIZE RELATIONSHIPS

SILT AND CLAY	SAND			GRAVEL		COBBLE	BOULDER
	FINE	MEDIUM	COARSE	FINE	COARSE		

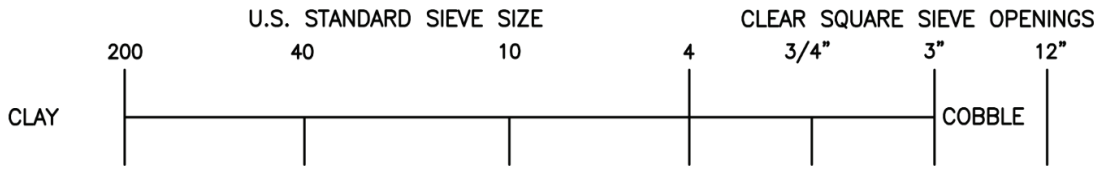

Appendix C
Boring Logs

MassDOT	TRC Environmental Corporation 650 Suffolk Street Lowell, MA 01854	Phone: (978) 970-5600 Fax: (978) 453-1995 E Mail: gmischel@trcsolutions.com	**Boring No.** BB-1 Scale 1" = 5'
City/Town: Lawrence	Bridge: L-04-030 (8JA)	Project File No: 608930	Contract No:
Project: RR BMRR over HWY, Manchester St.		Date & Time Started: 7-10-17 1145	Total Hours: 2
Groundwater Depth: 17'		Date & Time Completed: 7-10-17 1340	
Coordinates: N 3084683.1 E 742212.8	Driller: Geosearch, Inc.	Driller's Name: Joe Keenan and Josh Houde	
Ground Elevation: 73.06'	Inspector's Name: Lauren Hopp	Inspector's Company: TRC Environmental, Corporation	

Sample Number	Depth Range (Feet)	Blow Counts per 6 Inches Coring Times Minute Per Foot	Recovery Inches	Field Description	Strata Changes
S-1	0-2'	WOH 4 5 4	14"	0 - 4": TOPSOIL 4 - 14": Dry, loose, light brown, FINE TO COARSE SAND, trace fine to medium gravel, trace silt (fill).	4"
S-2	5'-7'	WOH 2 2 2	16"	Dry, very loose, tan, FINE TO COARSE SAND, trace fine gravel, trace silt. Note: Top 3" contain ash, slag and glass (fill).	
S-3	10'-12'	1 1 2 12	14"	0-8", S-3a: Dry, very loose, tan, FINE TO COARSE SAND, trace fine gravel, trace silt, trace slag (fill). 8-14", S-3b: Moist, very loose, reddish brown, FINE SAND, trace silt and roots, trace gravel, (fill).	
S-4	12'-14'	4 4 4 4	12"	Moist, loose, reddish brown, FINE SAND, trace silt. Note: Top 3" contain slag and ash (fill).	
S-5	14'-16'	3 4 4 3	13"	Moist, loose, tan and black FINE SAND, trace silt, ash, roots, (fill).	
S-6	16'-18'	10 12 12 14	17.5"	Wet, medium dense, tan, FINE SAND, trace silt. Note: Top 4" contain fine sand mixed with ash and slag (fill).	18'
S-7	18'-20'	3 6 6 8	24"	Wet, medium dense, tan to light brown, FINE TO COARSE SAND, trace silt.	
S-8	20'-22'	2 2 2 3	12"	Wet, very loose, tan to light brown, FINE TO COARSE SAND, trace silt.	
S-9	25'-27'	12 21 23 24	15"	0-10", S-9a: Wet, dense, tan to light brown, FINE TO COARSE SAND, trace silt. 10-15", S-9a: Wet, dense, brown to gray FINE TO COARSE SAND, some fine to coarse gravel, some silt.	25.8'
S-10	30-32'	12 10 10 11	12"	Wet, medium dense, brown to gray, FINE TO COARSE SAND, some fine to coarse gravel, some silt.	32'
				Boring Terminated at 32'.	

Remarks: Hollow-stem Auger with automatic hammer to drive SPT split spoons.

Driller notes gravel and difficult drilling around 28 feet bgs.

Protective Device - Stand: Box:
Well Depth: Solid Pipe:
Stick Up Pipe: Screen Pipe:

Penetration Resistance (N) Guide:

Cohesionless Soils (Sands, Gravels)		Cohesive Soils (Silts, Clays)	
Relative Density	Penetration Resistance	Consistency	Penetration Resistance
Very Loose	0 - 4	Very Soft	0 - 2
Loose	4 - 10	Soft	2 - 4
Medium Dense	10 - 30	Medium Stiff	4 - 8
Dense	30 - 50	Stiff	8 - 15
Very Dense	Over 50	Very Stiff	15 - 30
N=Sum of Second and Third 6" Blow Counts		Hard	Over 30

Terms Used for Second Entry of Descriptions: and = 40-50%, some = 10-40%, trace = 10% or less

Type of Drill Rig: 55-LC
Arrow-Board: Signs: Cones:
Hollow Stem Auger.
Sampler Type: SPT Size: 2'
Automatic Hammer Weight: 140 lbs.
Fall: 30"
Core Barrel Type: Size:

MassDOT	TRC Environmental Corporation 650 Suffolk Street Lowell, MA 01854	Phone: (978) 970-5600 Fax: (978) 453-1995 E Mail: gmischel@trcsolutions.com	**Boring No.** BB-2 Scale 1" = 5'

City/Town: Lawrence	Bridge: L-04-030 (8JA)	Project File No: 608930	Contract No:
Project: RR BMRR over HWY, Manchester St.	Date & Time Started: 7-7-17 0930		Total Hours: 2.25
Groundwater Depth: 17'	Date & Time Completed: 7-7-17 1140		
Coordinates: N 3084751.9 E 742160.5	Driller: Geosearch, Inc.	Driller's Name: Joe Keenan and Josh Houde	
Ground Elevation: 73.71'	Inspector's Name: Lauren Hopp	Inspector's Company: TRC Environmental, Corporation	

Sample Number	Depth Range (Feet)	Blow Counts per 6 Inches Coring Times Minute Per Foot	Recovery Inches	Field Description	Strata Changes
S-1	0-2'	2 4 2 3	11"	0 - 4": TOPSOIL	4'
				4 - 11": Dry, loose, tan to light brown, FINE SAND, trace fine to medium gravel, trace silt (fill).	
S-2	5'-7'	3 3 2 2	11"	Moist, loose, tan to light brown, FINE SAND, trace fine to medium gravel, trace silt, trace ash. (fill).	
S-3	10'-12'	1 1 2 2	12"	Moist, very loose, tan and black, FINE SAND, trace silt. (fill)	
S-4	12'-14'	2 2 2 2	9.5"	Moist, very loose, tan and black, FINE SAND, trace silt, trace glass,(fill).	
S-5	14'-16'	1 WOH 1 WOH	13.5"	Moist, very loose, tan, FINE SAND, trace silt (fill).	
S-6	16'-18'	2 2 WOH WOH	10"	Moist to wet, very loose, tan, FINE SAND, some silt, (fill).	
S-7	18'-20'	WOH WOH 1 for 12"	24"	0-2", S-7a: Wet, very loose, tan, FINE SAND, trace silt, (fill).	18.2'
				2-24", S-7b: Wet, very soft, black, ORGANIC SILT.	
S-8	20'-22'	WOH	20"	0-20" S-8: Wet, very soft, dark black, ORGANIC SILT, trace sand.	
S-9	22'-24'	WOH	24"	0-24" S-9: Wet, very loose, black, FINE SAND and, ORGANIC SILT.	
S-10	24'-26'	6 7 8 7	24"	0-12" S-10a: Wet, Stiff, Black, ORGANIC SILT.	25'
				12-24", S-10b: Wet, medium dense, tan, FINE SAND, trace silt.	
S-11	30-32'	16 15 15 14	5"	Wet, dense, tan to light brown, FINE TO COARSE SAND, some gravel, some silt.	
S-12	32'-34'	16 15 30 20	20"	Wet, dense, FINE TO COARSE SAND AND FINE TO MEDIUM GRAVEL, some silt, trace clay.	34'
				Boring Terminated at 34'.	

Remarks: Hollow-stem Auger with automatic hammer to drive SPT split spoons.

Driller notes gravel and difficult drilling around 28'.

Protective Device - Stand: Box:
Well Depth: Solid Pipe:
Stick Up Pipe: Screen Pipe:

Penetration Resistance (N) Guide:

Cohesionless Soils (Sands, Gravels)		Cohesive Soils (Silts, Clays)	
Relative Density	Penetration Resistance	Consistency	Penetration Resistance
Very Loose	0 - 4	Very Soft	0 - 2
Loose	4 - 10	Soft	2 - 4
Medium Dense	10 - 30	Medium Stiff	4 - 8
Dense	30 - 50	Stiff	8 - 15
Very Dense	Over 50	Very Stiff	15 - 30
N=Sum of Second and Third 6" Blow Counts		Hard	Over 30

Terms Used for Second Entry of Descriptions: and = 40-50%, some = 10-40%, trace = 10% or less

Type of Drill Rig: 850 Track Rig
Arrow-Board: Signs: Cones:
Hollow Stem Auger.

Sampler Type: SPT Size: 2'
Automatic Hammer Weight: 140 lbs.
Fall: 30"

Core Barrel Type: Size:

Appendix D
Soil Laboratory Test Results

SUMMARY OF LABORATORY TEST DATA

Project Name: Manchester Lawrence Rail Corridor
Client Name: TEC, Inc.
TRC Project #: 274047

SAMPLE IDENTIFICATION			Soil Group (USCS System)	GRAIN SIZE DISTRIBUTION				PLASTICITY				Organic Content (%)	Moisture Content (%)
Boring #	Sample #	Depth (ft)		Gravel (%)	Sand (%)	Silt (%)	Clay (%)	Liquid Limit (%)	Plastic Limit (%)	Plasticity Index (%)	Liquidity Index (%)		
BB-1	S-7	18.0-20.0	SP-SM	0.0	89.7	10.3		-	-	-	-	-	24.3
	S-10	30.0-32.0	SM	21.3	57.3	21.4		-	-	-	-	-	14.4
BB-2	S-8	20.0-22.0	ML/OL	-	-	-		36	27	9	3.3	9.0	56.7
	S-12	32.0-34.0	SM	27.1	45.5	27.4		-	-	-	-	-	13.3

DRAWN BY: TBT 08/07/17 CHECKED BY: PWK 08/07/17

LIQUID AND PLASTIC LIMITS TEST REPORT

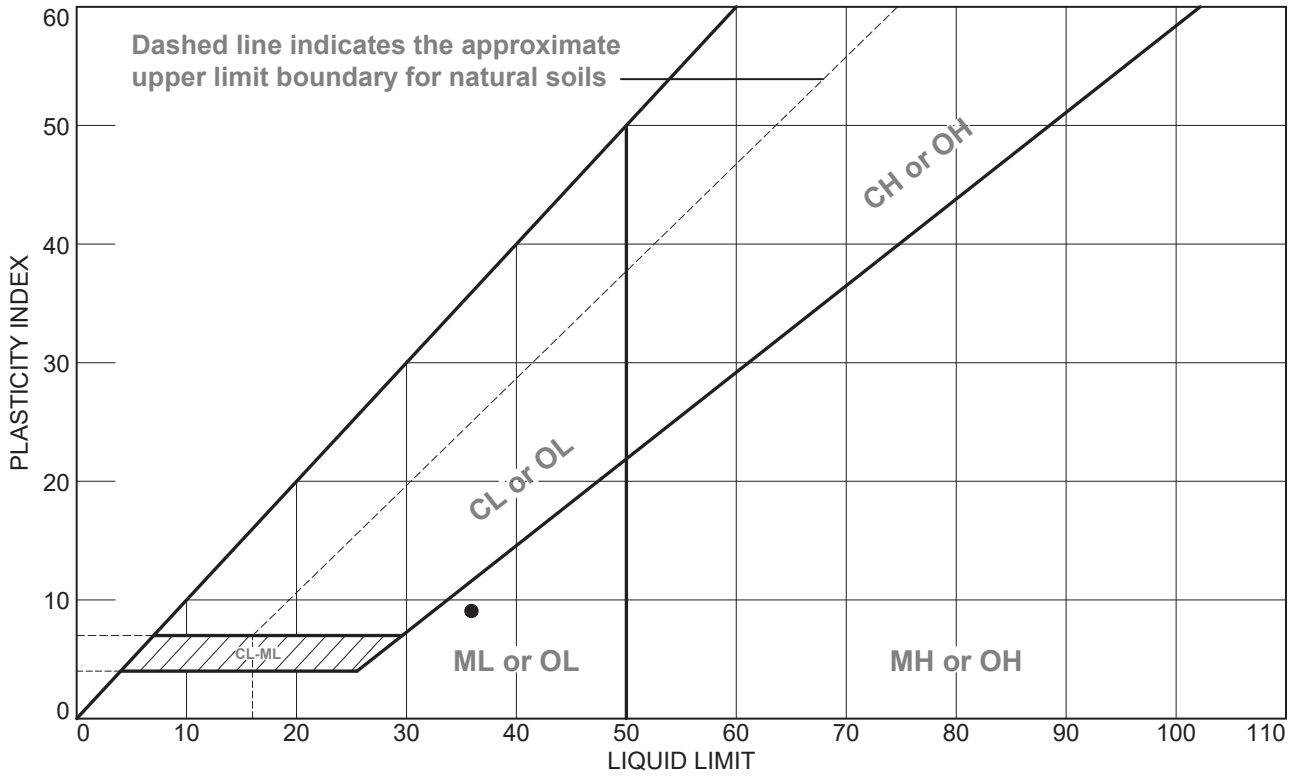

SOIL DATA

	SOURCE	SAMPLE NO.	DEPTH	NATURAL WATER CONTENT (%)	PLASTIC LIMIT (%)	LIQUID LIMIT (%)	PLASTICITY INDEX (%)	LIQUIDITY INDEX	USCS
●	BB-2	S-8	20.0-22.0 FT	56.7	27	36	9	3.3	ML/OL

TRC
Engineers, Inc.
Mt. Laurel, NJ

Client: TEC, INC.
Project: MANCHESTER LAWRENCE RAIL CORRIDOR

Project No.: 274047 **Figure** 1

Particle Size Distribution Report

	% +3"	% Gravel		% Sand			% Fines	
		Coarse	Fine	Coarse	Medium	Fine	Silt	Clay
○	0.0	0.0	0.0	0.0	7.6	82.1	10.3	

	LL	PL	D_{85}	D_{60}	D_{50}	D_{30}	D_{15}	D_{10}	C_C	C_u
○			0.3285	0.1822	0.1502	0.1050	0.0812			

MATERIAL DESCRIPTION	TEST DATE	USCS	NM
○ LIGHT BROWN SAND WITH SILT	07/30/17	SP-SM	24.3

Project No. 274047 **Client:** TEC, INC.
Project: MANCHESTER LAWRENCE RAIL CORRIDOR

○ **Source of Sample:** BB-1 **Depth:** 18.0-20.0 FT **Sample Number:** S-7

TRC Engineers, Inc.

Mt. Laurel, NJ

Remarks:
○SAMPLE DESCRIPTION BASED ON USCS

Figure 2

Tested By: JJA 07/30/17 **Checked By:** PWK 08/07/17

Particle Size Distribution Report

	% +3"	% Gravel		% Sand			% Fines	
		Coarse	Fine	Coarse	Medium	Fine	Silt	Clay
○	0.0	4.6	16.7	9.5	14.2	33.6	21.4	

	LL	PL	D_{85}	D_{60}	D_{50}	D_{30}	D_{15}	D_{10}	C_C	C_u
○			8.1910	0.6631	0.3034	0.1103				

MATERIAL DESCRIPTION	TEST DATE	USCS	NM
○ BROWN TO LIGHT BROWN SILTY SAND WITH GRAVEL	07/30/17	SM	14.4

Project No. 274047 **Client:** TEC, INC.
Project: MANCHESTER LAWRENCE RAIL CORRIDOR

○ **Source of Sample:** BB-1 **Depth:** 30.0-32.0 FT **Sample Number:** S-10

TRC Engineers, Inc.

Mt. Laurel, NJ

Remarks:
○SAMPLE DESCRIPTION BASED ON USDA

Figure 3

Tested By: JJA 07/30/17 **Checked By:** PWK 08/07/17

Particle Size Distribution Report

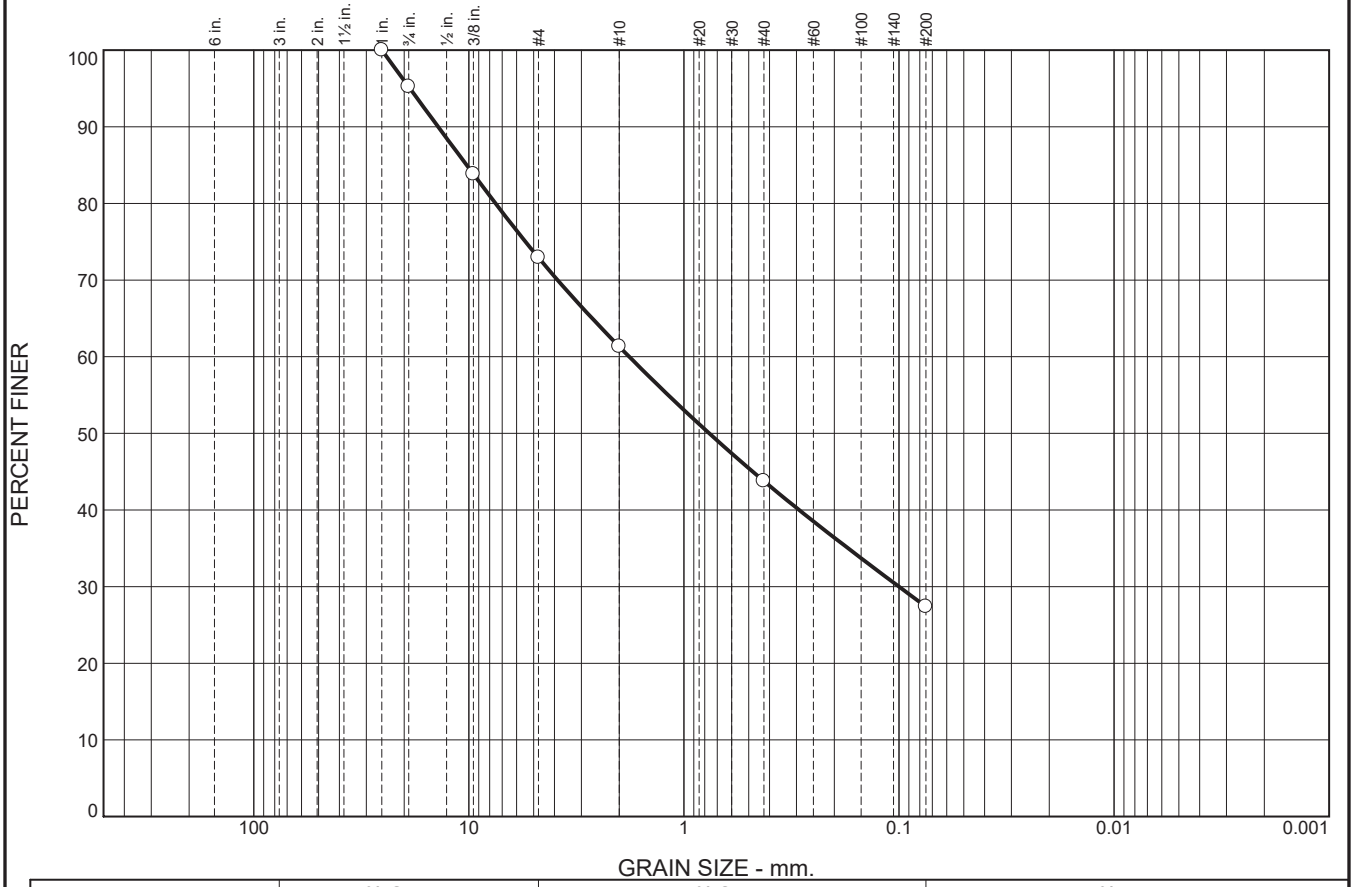

	% +3"	% Gravel		% Sand			% Fines	
		Coarse	Fine	Coarse	Medium	Fine	Silt	Clay
○	0.0	4.8	22.3	11.6	17.5	16.4	27.4	

	LL	PL	D_{85}	D_{60}	D_{50}	D_{30}	D_{15}	D_{10}	C_c	C_u
○			10.2401	1.7965	0.7626	0.1001				

MATERIAL DESCRIPTION	TEST DATE	USCS	NM
○ LIGHT BROWN SILTY SAND WITH GRAVEL	07/30/17	SM	13.3

Project No. 274047 **Client:** TEC, INC.
Project: MANCHESTER LAWRENCE RAIL CORRIDOR

○ **Source of Sample:** BB-2 **Depth:** 32.0-34.0 FT **Sample Number:** S-12

TRC Engineers, Inc.

Mt. Laurel, NJ

Remarks:
○SAMPLE DESCRIPTION BASED ON USCS

Figure 4

Tested By: JJA 07/30/17 **Checked By:** PWK 08/07/17

Appendix E
Geotechnical Analysis Calculations

Calculation of N Bar Values

Objective: Calculate N Bar values for soils underlying Site.

Approach: Use methodology described in AASHTO LRFD Seismic Bridge Design (2011) Article 3.4.2.2 to determine site-specific N Bar values.

References:
1. Castle, R.O. 1958. Surficial geology of the Lawrence quad¬rangle, Massachusetts-New Hampshire: U.S. Geological Survey Geologic Quadrangle Map GQ–107, scale 1:31,680 https://pubs.er.usgs.gov/publication/.
3. AASHTO. 2011. AASHTO Guide Specifications for LRFD Seismic Bridge Design, 2nd Edition, with interim revisions through 2022, American Association of State Highway and Transportation Officials

Assumptions:
1. Soils encountered in borings TRC-BB-1 and TRC-BB-2 were considered representative of soils beneath the South and North Abutment, respectively, and Wingwall foundations.
2. In the TRC borings were advanced from the rail bed at the top of the exisitng abutment and native (i.e., glacial) soils underlying the abutment foundation begin approximately 18 feet bgs.
3. Soils encountered in TRC borings BB-1 and BB-2 underlying the fill (approximately below 18 feet bgs), when considered together, are representative of soils beneath the South and North Abutment foundations.
4. Organic silt shown on the log for boring BB-2 was considered to be of limited extent and any organic silt present under the North Abutment would have been consolidated by the embankment fill or displaced during fill placement.
5. Glacial Soils encountered underlaying the site extends to the underlying bedrock, which was considered to be approximately 100 feet below the ground surface, based on available information.

Methodology: Use Method B for cohesionless soils to determine N Bar (Equation 3.4.2.2-2).
Specifically,

$$\overline{N} = \frac{\sum_{i=1}^{n} d_i}{\sum_{i=1}^{n} \frac{d_i}{N_i}}$$

Where:

d_i = Soil layer thickness d_i (ft.) defined by the limits shown in the soil description column on the boring logs rather than considering each individual test sample as a discrete layer.

N_i = Average SPT N value within soil layer thickness d_i; however, the SPT N value from an individual soil sample shall not be taken as greater than 100 blows/ft.

Procedure: List blow counts or assumed undrained shear strength and respresentative soil thicknesses for both borings.

TRC-BB-1 (Method B, Eq. 3.4.2.2.-2)	Soil Layer	Blow Count (N)	Thickness (d_i, feet)	d_i/N_i	$\sum_{i=1}^{n} d_i$	$\overline{\sum_{i=1}^{n} \frac{d_i}{N_i}}$	N Bar
South Abutment	Fill	9	5	0.556	100.00	6.79	**14.7**
	Fill	4	5	1.250			
	Fill	3	2	0.667			
	Fill	8	2	0.250			
	Fill	8	2	0.250			
	Fill	24	2	0.083			
	Glacial Soils	12	2	0.167			
	Glacial Soils	4	2	0.500			
	Glacial Soils	44	5	0.114			
	Glacial Soils	20	5	0.250			
<wt. aver. of Glacial Soils N-Values>	Glacial Soils	25	68	2.705			
		- -	- -	- -			

Calculated by: WAN
Date: 10/16/2022
Revised: 12/14/2022

Checked by: IAM/AJ
Date: 10/28/2022

Revision: 6
Status: Final

TRC

Manchester Street Bridge - SPT N-value Calculations
Lawrence, MA PN: 274047

Calculation of N Bar Values

TRC-BB-2 (Method C, Eq. 3.4.2.2.-2) **North Abutment**	**Soil Layer**	**Blow Count (N)**	**Thickness (d_i, feet)**	**d_i/N_i**	$\sum_{i=1}^{n} d_i$	$\overline{\sum_{i=1}^{n} \frac{d_i}{N_i}}$	**N Bar**
	Fill	6	5	0.833	93.00	7.10	**13.1**
	Fill	5	5	1.000			Cohesionless
	Fill	3	2	0.667			Soils
	Fill	4	2	0.500			
	Fill	1	2	2.000			
	Org. Silt	NA	2	NA			
	Org. Silt	NA	2	NA			
	Org. Silt	NA	2	NA			
	Org. Silt	NA	1	NA			
	Glacial Soils	15	1	0.067			
	Glacial Soils	30	4	0.133			
	Glacial Soils	45	4	0.089			
<wt. aver. of Glacial Soils N-Values>	Glacial Soils	38	68	1.813			

Soil Layer	**Cohesion, S_u (ksf)**	**Thickness (d_i, feet)**	**d_i/S_{ui}**	$\sum_{i=1}^{n} d_i$	$\sum_{i=1}^{k} \frac{d_i}{S_{ui}}$	**S_u Bar** (ksf)
Org. Silt	0.50	7	14.000	7.00	14.00	**0.5**

Results: **Based on the borings advanced by TRC, the N Bar values for the site are in the range of 13 to 15. Also, the S_u Bar for the Organic Silt is 0.5 ksf**

Calculated by: WAN
Date: 10/16/2022
Revised: 12/14/2022

Checked by: IAM/AJ
Date: 10/28/2022

Revision: 6
Status: Final

Calculation of $N_{1,60}$ Values

Objective: Calculate N values (i.e., SPT blows per foot) for site soils normalized for overburden stress and hammer energy.

Approach: Use AASHTO methodology to determine the site-specific normalized N values.

References: 1. AASHTO LRFD Bridge Design Specifications, 9th Edition (2020) Section 10.4.6.2.4 (page 10-16 et seq.)

Assumptions:
1. Soils encountered in borings TRC-BB-1 and TRC-BB-2 were considered representative of soils beneath the South and North Abutment, respectively, and Wingwall foundations.
2. In the TRC borings, soils underlying the abutment foundation begin approximately 18 feet bgs because these borings were advanced from the rail bed at the top of the exisitng abutment.
3. The normalized SPT N value from an individual soil sample shall not be taken as greater than 100 blows/ft.
4. Soil properties are summarized below.

Property	Existing Fill (Soil Layer 1)	Organic Silt (Soil Layer 2)	Proposed Structural Fill (Soil Layer 3)	Glacial Soils (Soil Layer 4)
Dry Unit Weight, γ_d (pcf)	95	90	115	115
Moist Unit Weight, γ_m (pcf)	105	97	120	120
Saturated Unit Weight, γ_{sat} (pcf)	120	105	125	125

Methodology:

N values normalized for overburden stress = $N_1 = C_N * N$

N values normalized for hammer energy = N_{60} = (ER/60%)

N values normalized for stress and energy = $N_{1,60}$

$N_{1,60}$ = $(C_N * N) * (ER/60\%)$

Where:

C_N = $(0.77 * \log_{10}(40/\sigma'_v))$ and $C_N < 2.0$

σ'_v = Vertical Effective Stress, ksf

N = SPT N value recorded in field.

ER = Hammer efficiency expressed as percentage of theoretical free fall energy delivered by hammer used.
TRC borings - SPT used automatic hammer, so ER = 80%
MassDOT borings - SPT used safety hammer, so ER = 60%

Procedure: Calculate normalized N values using respresentative soil thicknesses for each sample and the soil properties.
Note: *highlighted blow counts indicate an N value >100 that was set equal to 100*

A00880 - 145
Proposal No. 608930-128034

Calculation of $N_{1,60}$ Values

Boring TRC-BB-1 South Abutment Depth to GWT = 17 feet bgs

Sample	Soil Layer	Mid-point Depth (feet bgs)	Blow Counts (N)	γ_m (pcf)	γ_{sat} (pcf)	σ'_v (ksf)	C_N	N_1	N_{60}	$N_{1,60}$	Design $N_{1,60}$	Average Design $N_{1,60}$
SS-1	1	2	9	105	120	0.21	1.76	16	12	21	21	Fill
SS-2	1	6	4	105	120	0.63	1.39	6	5	7	7	15
SS-3	1	11	3	105	120	1.16	1.19	4	4	5	5	
SS-4	1	13	8	105	120	1.37	1.13	9	11	12	12	
SS-5	1	15	8	105	120	1.58	1.08	9	11	12	12	
SS-6	1	17	24	105	120	1.82	1.03	25	32	33	33	▽
SS-7	4	19	12	120	125	2.07	0.99	12	16	16	16	Glacial Soils
SS-8	4	21	4	120	125	2.32	0.95	4	5	5	5	24
SS-9	4	26	44	120	125	2.94	0.87	38	59	51	51	
SS-10	4	31	20	120	125	3.57	0.81	16	27	22	22	

Boring TRC-BB-2 North Abutment Depth to GWT = 17 feet bgs

Sample	Soil Layer	Mid-point Depth (feet bgs)	Blow Counts (N)	γ_m (pcf)	γ_{sat} (pcf)	σ'_v (ksf)	C_N	N_1	N_{60}	$N_{1,60}$	Design $N_{1,60}$	Average Design $N_{1,60}$
SS-1	1	1	6	105	120	0.11	1.99	12	8	16	16	Fill
SS-2	1	6	5	105	120	0.63	1.39	7	7	9	9	7
SS-3	1	11	3	105	120	1.16	1.19	4	4	5	5	
SS-4	1	13	4	105	120	1.37	1.13	5	5	6	6	
SS-5	1	15	1	105	120	1.58	1.08	1	1	1	1	▽
SS-6	2	17	2	97	105	1.79	1.04	2	3	3	3	Organic Silt
SS-7	2	21	1	97	105	2.21	0.97	1	1	1	1	4
SS-8	2	21	0	97	105	2.21	0.97	0	0	0	0	
SS-9	2	23	0	97	105	2.42	0.94	0	0	0	0	
SS-10	4	25	15	120	125	2.67	0.91	14	20	18	18	
SS-11	4	31	30	120	125	3.42	0.82	25	40	33	33	Glacial Soils
2	4	33	45	120	125	3.67	0.80	36	60	48	48	41

Results

	Overall
Average $N_{1,60}$ for Existing Fill Layer =	12
South Abutment $N_{1,60}$ for Glacial Soils Layer =	24
North Abutment $N_{1,60}$ for Glacial Soils Layer =	41
Average $N_{1,60}$ for Glacial Soils Layer =	29

Calculated by: WAN
Date: 10/16/2022
Revised: 12/14/2022

Checked by: IAM/AJ
Date: 10/28/2022

Revision: 6
Status: Final

A00880 - 146
Proposal No. 608930-128034

Bearing Resistance and Settlement Calculations for Existing North Abutment

Objective: Confim that the existing footings are adequate by evaluating bearing resistance and settlement based on the effective footing width.

References:
1) AASHTO LRFD Bridge Design Specifications: 9th Edition (2020)
2) Borings BB-1 and BB-2 performed by TRC July 7 and 10, 2017, respectively.
3) Drawing of bridge *B&M Railroad No. 213 Manchester St. Bridge* dated September 1895
4) "Sketch Plans of Superstructure Replacement, Lawrence,Lawrence Manchester Rail Trail Over Manchester Street," TEC, dated June 9, 2022
5) Calculation of $N_{1,60}$ values presented spreadsheet entitled *274047 SPT Calcs - Manch St Bridge 20221216.xlsx*

Assumptions:
1) Boring BB-2 is representative of the soils at the site.
2) Base of Exisitng footing is at El 58.3 feet (TEC, 2022)
3) Existing footings are granite blocks
4) Eccentricity as indicated below.
5) Glacial Soils underlay the exisitng footings.

Solution:

Bearing Soil Properties/Subsurface Information

Unit Weight of Glacial Soil ($\gamma_{gs,m}$):	120	pcf	γ based on moist Glacial Soils properties
Unit Weight of Glacial Soil ($\gamma_{gs,sat}$):	125	pcf	γ based on saturated Glacial Soils properties
Unit Weight of Existing Fill ($\gamma_{ef,m}$):	105	pcf	γ based on moist Existing Fill properties
Unit Wt of Structural Fill ($\gamma_{F,m}$):	120	pcf	γ based on moist Proposed Structural Fill properties.
Unit Weight of Water (γ_w):	62.4	pcf	
Unit Weight of granite (γ_c):	170	pcf	Based on literature review
Cohesion of Bearing Soil (c):	0	psf	
Friction Angle of Bearing Soil (ϕ_f):	32	degrees	ϕ_f based on Glacial Soils properties
Friction Angle of Structural Fill (ϕ_{sf}):	32	degrees	ϕ_{sf} assumed for Prposed Structural Fill
Friction Angle of Exisitng Fill (ϕ_{ef}):	30	degrees	ϕ_{ef} based on Existing Fill properties

Soil Description: Based on boring BB-2.

Base of Footing Elevation:	58.3	ft, NAVD-88	As shown in drawings, TEC 2022
Ground Surface Elevation (front of wall):	61.0	ft, NAVD-88	As shown in drawings, TEC 2022
Groundwater Elevation:	56.7	ft, NAVD-88	Based on Boring Log BB-2
Top of Glacial Soils Elevation:	58.3	ft, NAVD-88	Based on Boring Log BB-2
Height of Raised Embankment Grade:	4.0	ft	As shown in drawings, TEC 2022

Footing Geometry

Minimum Footing Depth (D_f):	2.7	ft	As shown in drawings, TEC 2022
Groundwater Depth Below GS:	4.3	ft	Based on Boring Logs
Width (B):	10	ft	As shown in B&MRR drawing, 1895
Length (L):	45.83	ft	As shown in B&MRR drawing, 1895
Width Eccentricity (e_B):	2.79	ft	
Length Eccentricity (e_L):	0	ft	
Effective Width (B'):	4.41	ft	
Effective Length (L'):	45.83	ft	

Calculated by: WAN
Date: 10/18/2022
Revised: 12/19/2022

Checked by: AJ
Date: 10/28/2022

Revision: 6
Status: Final

Bearing Resistance and Settlement Calculations for Existing North Abutment

Calculation of Eccentricity

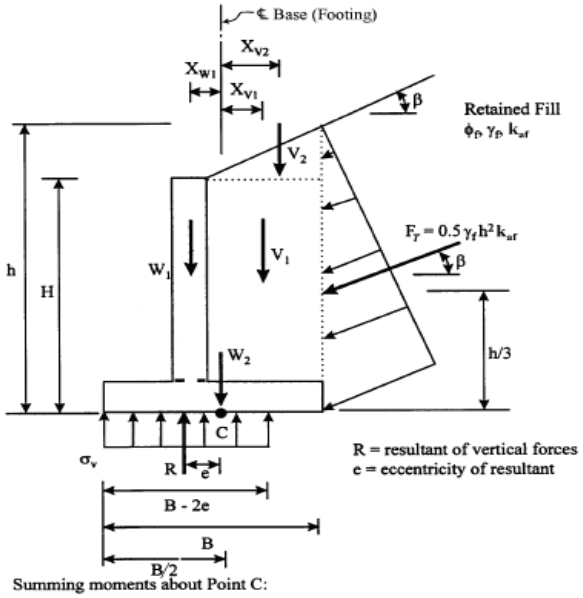

Summing moments about Point C:

$$e = \frac{\left(F_T Cos\beta\right)h/3 - \left(F_T \sin\beta\right)B/2 - V_1 X_{V1} - V_2 X_{V2} + W_1 X_{W1}}{V_1 + V_2 + W_1 + W_2 + F_T \sin\beta}$$

Figure 11.6.3.2-1—Bearing Stress Criteria for Conventional Wall Foundations on Soil

β =	0.00	degrees	0 Radians
Avg. dist. face of Abutment Rt. of C/L	2.00	feet	As shown in B&MRR drawing, 1895
H =	18.99	feet	Includes raised grade
Elev. Top of fill =	77.29	feet	Final Elevation
h =	21.99	feet	Includes raised grade
Footing Thickness =	3	feet	Estimated from B&MRR drawing, 1895
Wt behind Abut., V_1 =	2.37	Kips	See Tab: *Existing Abutment*
Load from Wall, W_1 =	11.22	Kips	See Tab: *Existing Abutment*
Wt of Footing, W_2 =	5.10	Kips	Note: Above GWT
Resultant behind Abut., X_{V1} =	1.61	feet	See Tab: *Existing Abutment*
Resultant of Wall, X_{W1} (Rt. of C/L) =	0.02	feet	See Tab: *Existing Abutment*
Active lateral earth pressure, K_{aF} =	0.30		K based structural fill on MassDOT criteria see ***274047 Manch Street Bridge Lateral Pressure 20221215.xlsx***
Lateral Force of Fill, F_T =	7.62	Kips	
e =	2.79		
Normal Pressure, σ_n=	4.23	ksf	
Change in Normal Pressure, $\Delta\sigma_n$=	0.48		Assumes wt of pedestrian bridge same as wt. of railroad bridge

Manchester Street Bridge - North Abutment, Lawrence, MA
PN: 274047

Load for Existing North Abutment

Objective: Calculate the load (weight) and location of the resultant for the existing abutments

References: 1) Drawing of bridge *B&M Railroad No. 213 Manchester St. Bridge* dated September 1895

Assumptions: 1) Abutment geometry is as shown in the drawings.
2) Granite blocks are 2 feet thick; top course is 1 foot thick.
3) Density of granite is 170 pounds per cubic foot (pcf)
4) Batter is negligible (i.e., face is vertical)

Solution:

Unit Weight of Water (γ_w):	62.4 pcf		
Unit Weight of granite (γ_c):	170 pcf		Based on literature review
Base of Footing Elevation:	58.3 ft, NAVD-88		As shown in drawings, TEC 2022
Footing Width:	10.0 ft		As shown in B&MRR drawing, 1895
Ground Surface (GS) Elevation:	61.0 ft, NAVD-88		As shown in drawings, TEC 2022
Groundwater Elevation:	56.7 ft, NAVD-88		Based on Boring Logs
Top of Glacial Soils Elevation:	55.7 ft, NAVD-88		Based on Boring Logs
Avg. dist. face of Abutment Rt. of C/L =	2.00 feet		Estimated from B&MRR drawing, 1895

Load from Abutment

Unit No.	Wall Level (Below top)	Width (feet)	Thickness (feet)	Weight (pounds)	C/L Location (ft from face)	Moment (ft-lbs)
1	-1	2.0	1	340	1.5	510
2	-2	4.0	1	680	2.5	1,700
3	-4	4.0	2	1,360	2.5	3,400
4	-6	4.0	2	1,360	2.5	3,400
5	-8	5.0	2	1,700	3.0	5,100
6	-10	5.0	2	1,700	3.0	5,100
7	-12	6.0	2	2,040	3.5	7,140
8	-14	6.0	2	2,040	3.5	7,140

Totals = 11,220 33,490 (ft-lbs)
Location of Resultant Wall Load from Face = 2.98 feet
eccentricity from C/L of Wall Load = 0.02 feet
Left of C/L

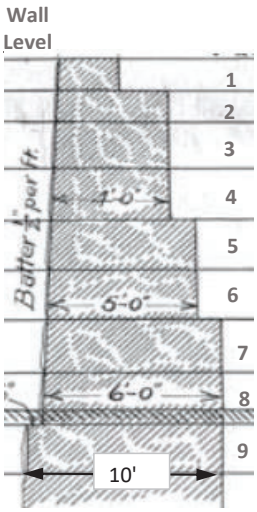

Load from Soil Behind Abutment Note: Above GWT

Wall Level (from top)	Width (feet)	Thickness (feet)	Weight (pounds)	C/L Location (ft from face)	Moment (ft-lbs)
1	4.0	1	420	4.5	-1,890
2	2.0	1	210	5.5	-1,155
3	2.0	2	420	5.5	-2,310
4	2.0	2	420	5.5	-2,310
5	1.0	2	210	6.0	-1,260
6	1.0	2	210	6.0	-1,260
7	0.0	2	0	6.5	0
8	0.0	2	0	6.5	0

Totals = 1,890 -10,185 (ft-lbs)
Location of Resultant Soil Load from Face = -5.39 feet
eccentricity from C/L of Soil Load = 1.61 feet
Left of C/L

Calculated by: WAN
Date: 10/18/2022
Revised: 12/19/2022

Checked by: AJ
Date: 10/28/2022

Revision: 6
Status: Final

Manchester Street Bridge - North Abutment, Lawrence, MA
PN: 274047
Page: 4 of 7

Net Loads and moments (due to Soil and Abutment Units):

Item	Weight, lb	Moment, lb.ft
Abutment Units	11,220	33,490
Fill	1,890	-10,185
Total=	13,110	23,305

Location of Resultant Total Load from Face = 1.78 feet

eccentricity from C/L of Total Load = 1.22 feet

Right of C/L

Calculated by: WAN
Date: 10/18/2022
Revised: 12/19/2022

Checked by: AJ
Date: 10/28/2022

Revision: 6
Status: Final

Service Limit State (Hough Method) Bearing Resistance Calculation for Existing North Abutment

Total Settlement, $S_t = S_e + S_c + S_s$ Eq. 10.6.2.4.1-1

S_e = Elastic Settlement (feet)

S_c = Primary Consolidation Settlement (feet) = 0 Feet for Chesionless Soils

S_s = Secondary Settlement (feet) = 0 Feet for Chesionless Soils

Use Hough Method (AASHTO LFRD-BDS, 2020, Article 10.6.2.4.2b) to Estimate Elastic Settlement

$$S_e = \sum_{i=1}^{n} \Delta H_i \qquad (10.6.2.4.2b\text{-}1)$$

Where:

$$\Delta H_i = H_c \frac{1}{C'} \log\left(\frac{\sigma'_o + \Delta\sigma_v}{\sigma'_o}\right) \qquad (10.6.2.4.2b\text{-}2)$$

n = number of layers within stress zone (max. layer thickness 10 ft)

ΔH_i = Elastic settlement of layer (feet)

H_c = Initial height of layer i (feet)

C' = Bearing capacity index from Figure 10.6.2.4.2b-1

σ'_o = Initial vertical effective stress at midpoint of layer i (ksf)

$\Delta\sigma'_o$ = Increase in vertical stress at midpoint of layer i (ksf)

Distribution of Vertical Stress (AASHTO 2020)

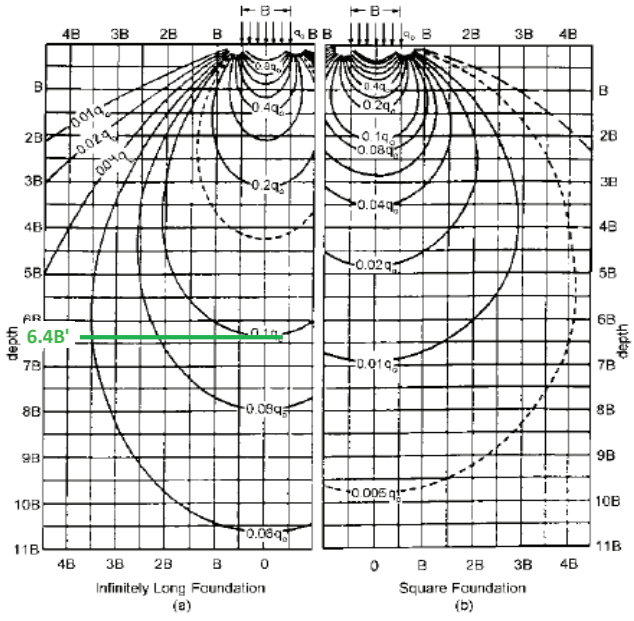

Figure 10.6.2.4.1-1—Boussinesq Vertical Stress Contours for Continuous and Square Footings Modified after Sowers (1979)

Bearing Capacity Index vs Corrected SPT (AASHTO 2020)

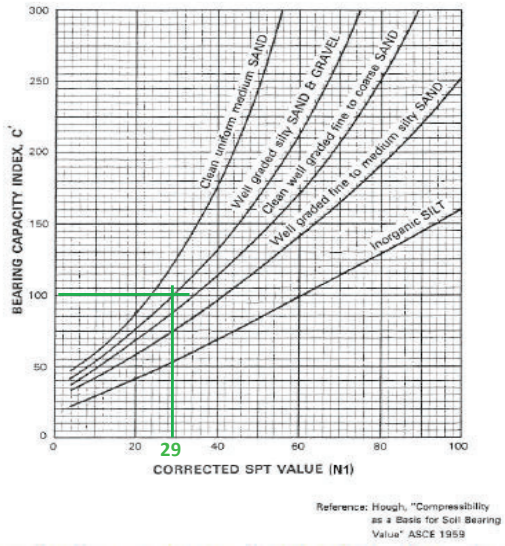

Figure 10.6.2.4.2b-1—Bearing Capacity Index versus Corrected *SPT* (Hough, 1959, as modified in Samtani and Nowatzki, 2006)

Note: AASHTO LRFD-BDS (2020) 10.6.2.4.2.b states: "SPT blow counts shall be corrected as specified in Article 10.4.6.2.4 for depth, i.e. overburden stress, and SPT hammer efficiency, before correlating the SPT blow counts to the bearing capacity index, C'."

Calculation of Elastic Settlment - Hough Method

Effective Width (B'):	4.41	feet						
Effective Length (L'):	45.83	feet	Ratio L':B' =	10.4	> 10, so Infinity Long Foundation			
Depth to $0.1(q_o)$ =	6.4B' =	28.2	feet					
n =	3	layers	Assumed					
$H_{c1} = H_{c2} = Hc_3$ =	9.42	feet						
C' =	95	$N_{1,60}$ =	29	blows per foot for well-grade fine to coarse sand				
				See ***274047 SPT Calcs - Manch St Bridge 20221216.xlsx***				
				Use average $N_{1,60}$ blow counts for Glacial Soils.				
Depth to Water, ft=	1.59							
	d_{o1} =	4.71	feet bgs	To midpoint Layer C1 =	1.07	* B' =	4.71	feet, bgs
Depth below footing	d_{o2} =	14.12	feet bgs	To midpoint Layer C1 =	3.20	* B' =	14.12	feet, bgs
	d_{o3} =	23.54	feet bgs	To midpoint Layer C1 =	5.33	* B' =	23.54	feet, bgs
	σ'_{o1} =	2.36	ksf	At midpoint Layer C1				
GWT at Elev. 56.7 ft	σ'_{o2} =	2.95	ksf	At midpoint Layer C2				
	σ'_{o3} =	3.53	ksf	At midpoint Layer C3				
	$\Delta\sigma_1$ =	0.24	ksf	At midpoint Layer C1 =	1.07	* B' =	4.71	feet, bgs
Based on Boussinesq	$\Delta\sigma_2$ =	0.10	ksf	At midpoint Layer C2 =	3.20	* B' =	14.12	feet, bgs
pressure distribution	$\Delta\sigma_3$ =	0.06	ksf	At midpoint Layer C3 =	5.33	* B' =	23.54	feet, bgs
	ΔH_1 =	0.004	feet					
	ΔH_2 =	0.001	feet					
	ΔH_3 =	0.001	feet					
	S_e =	**0.006**	**feet =**	**0.08 inches**				

Find Net Load Based on Allowable Differential Settlement Using Hough Method

FHWA-RC/TD-10-001 states maximum angular distortion should be less than 1/250

Bridge span = 55.3 feet, c-to-c (square)

So, allowable differential settlement = 2.65 inches

Conservatively, Calculate Net Load Based on 1-inch Differential Settlement

Net Normal Load =	**9.90**	**ksf**	
$\Delta\sigma_{1,max}$ =	4.95	ksf	At midpoint Layer C1
$\Delta\sigma 2_{,max}$ =	1.98	ksf	At midpoint Layer C2
$\Delta\sigma 3_{,max}$ =	1.19	ksf	At midpoint Layer C3
ΔH_1 =	0.585	in	
ΔH_2 =	0.266	in	
ΔH_3 =	0.150	in	
S_e =	**1.00**	**inches**	
Net Change in Stress at base of Footing =	**9.90**	**ksf**	

Calculated by: WAN
Date: 10/18/2022
Revised: 12/19/2022

Checked by: AJ
Date: 10/28/2022

Revision: 6
Status: Final

Strength Limit State Bearing Resistance Calculation for Existing North Abutment

Factored Bearing Resistance: $q_R = q_n * \phi_b$		Eq. 10.6.3.1.1-1	
Resistance Factor (ϕ_b) =	0.45	Tb. 10.5.5.2.2-1	
Nominal Resistance (q_n) =			
$q_n = c*N_{cm} + \gamma*D_f*N_m*C_{wq} + 0.5*\gamma*B'*N_{\gamma m}*C_{w\gamma}$		Eq. 10.6.3.1.2a-1	
$N_{qm} = N_q*s_q*d_q*i_q$		Eq. 10.6.3.1.2a-3	
Bearing Capacity Factor (N_q)	23.2	Tb. 10.6.3.1.2a-1	
Shape Correction Factor (s_q)	1.06	Tb. 10.6.3.1.2a-3	
Load Inclination Factor (i_q)	1.00	Eq. 10.6.3.1.2a-7	Horizontal load = 0 (assumed)
Depth Correction Factor (d_q)	1.3	Eq. 10.6.3.1.2a-10	$= 1 + 2\tan\phi_f(1-\sin\phi_f)^2\arctan(D_f/B')$
N_{qm}=	32.53		*(Df, B' - see Tab: Calcuations)*
$N_{cm} = N_c*s_c*i_c$		Eq. 10.6.3.1.2a-2	
Bearing Capacity Factor (N_c)	35.5	Tb. 10.6.3.1.2a-1	
Shape Correction Factor (s_c)	1.06	Tb. 10.6.3.1.2a-3	
Load Inclination Factor (i_c)	1.00	Eq. 10.6.3.1.2a-6	Horizontal load = 0 (assumed)
N_{cm} =	37.73		
$N_{\gamma m} = N_\gamma*s_\gamma*i_\gamma$		Eq. 10.6.3.1.2a-4	
Bearing Capacity Factor (N_γ or $N_{\gamma q}$)	30.2	Tb. 10.6.3.1.2a-1	
Shape Correction Factor (s_γ)	0.96	Tb. 10.6.3.1.2a-3	
Load Inclination Factor (i_γ)	1.00	Eq. 10.6.3.1.2a-8	Horizontal load = 0 (assumed)
$N_{\gamma m}$=	29.04		
Groundwater Coefficients		Tb. 10.6.3.1.2a-2	
(C_{wq})	1.00		
($C_{w\gamma}$)	0.73		
q_n=	**16 ksf**		
q_R=	**7.2 ksf**		

Calculated by: WAN
Date: 10/18/2022
Revised: 12/19/2022

Checked by: AJ
Date: 10/28/2022

Revision: 6
Status: Final

TRC

Manchester Street Bridge - South Abutment, Lawrence, MA
PN: 274047

Bearing Resistance and Settlement Calculations for Existing South Abutment

Objective: Confim that the existing footings are adequate by evaluating bearing resistance and settlement based on the effective footing width.

References:
1) AASHTO LRFD Bridge Design Specifications: 9th Edition (2020)
2) Borings BB-1 and BB-2 performed by TRC July 7 and 10, 2017, respectively.
3) Drawing of bridge *B&M Railroad No. 213 Manchester St. Bridge* dated September 1895
4) "Sketch Plans of Superstructure Replacement, Lawrence,Lawrence Manchester Rail Trail Over Manchester Street," TEC, dated June 9, 2022
5) Calculation of $N_{1,60}$ values presented spreadsheet entitled *274047 SPT Calcs - Manch St Bridge 20221216.xlsx*

Assumptions:
1) Boring BB-1 is representative of the soils at the site.
2) Base of Exisitng footing is at El 58.3 feet (TEC, 2022)
3) Existing footings are granite blocks
4) Eccentricity as indicated below.
5) Glacial Soils underlay the exisitng footings.

Solution:

Bearing Soil Properties/Subsurface Information

Unit Weight of Glacial Soil ($\gamma_{gs,m}$):	120	pcf	γ based on moist Glacial Soils properties
Unit Weight of Glacial Soil ($\gamma_{gs,sat}$):	125	pcf	γ based on saturated Glacial Soils properties
Unit Weight of Existing Fill ($\gamma_{ef,m}$):	105	pcf	γ based on moist Existing Fill properties
Unit Weight of Existing Fill ($\gamma_{ef,sat}$):	120	pcf	γ based on saturated Existing Fill properties
Unit Wt of Structural Fill ($\gamma_{F,m}$):	120	pcf	γ based on moist Proposed Structural Fill properties.
Unit Weight of Water (γ_w):	62.4	pcf	
Unit Weight of granite (γ_c):	170	pcf	Based on literature review
Cohesion of Bearing Soil (c):	0	psf	
Friction Angle of Bearing Soil (ϕ_f):	32	degrees	ϕ_f based on Glacial Soils properties
Friction Angle of Structural Fill (ϕ_{sf}):	32	degrees	ϕ_{sf} assumed for Proposed Structural Fill
Friction Angle of Exisitng Fill (ϕ_{ef}):	30	degrees	ϕ_{ef} based on Existing Fill properties

Soil Description: Based on boring BB-1.

Base of Footing Elevation:	58.3	ft, NAVD-88	As shown in drawings, TEC 2022
Ground Surface Elevation (front of wall):	61.0	ft, NAVD-88	As shown in drawings, TEC 2022
Groundwater Elevation:	56.1	ft, NAVD-88	Based on Boring Log BB-1
Top of Glacial Soils Elevation:	55.1	ft, NAVD-88	Based on Boring Log BB-1
Height of Raised Embankment Grade:	3.5	ft	As shown in drawings, TEC 2022

Footing Geometry

Minimum Footing Depth (D_f):	2.7	ft	As shown in drawings, TEC 2022
Groundwater Depth Below GS:	4.9	ft	Based on Boring Logs
Width (B):	10	ft	As shown in B&MRR drawing, 1895
Length (L):	41.8	ft	As shown in B&MRR drawing, 1895
Width Eccentricity (e_B):	2.81	ft	
Length Eccentricity (e_L):	0	ft	
Effective Width (B'):	4.39	ft	
Effective Length (L'):	41.8	ft	

Calculated by: WAN
Date: 10/18/2022
Revdised: 12/19/2022

Checked by: AJ
Date: 10/28/2022

Revision: 6
Status: Final

Bearing Resistance and Settlement Calculations for Existing South Abutment

Calculation of Eccentricity

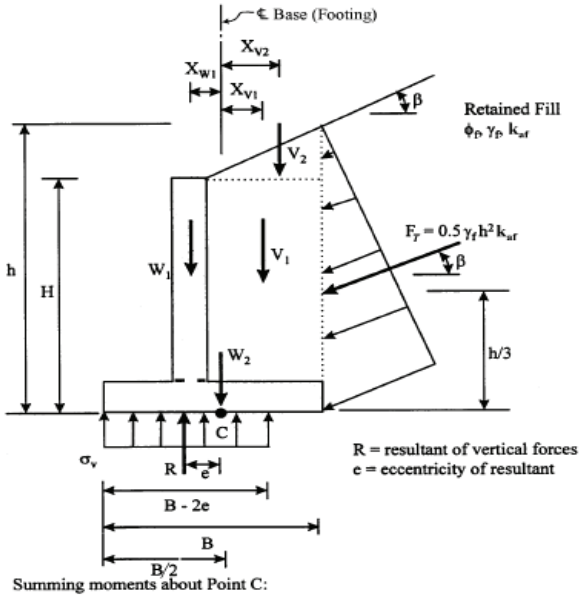

Summing moments about Point C:

$$e = \frac{\left(F_T Cos\beta\right)h/3 - \left(F_T \sin\beta\right)B/2 - V_1 X_{V1} - V_2 X_{V2} + W_1 X_{W1}}{V_1 + V_2 + W_1 + W_2 + F_T \sin\beta}$$

Figure 11.6.3.2-1—Bearing Stress Criteria for Conventional Wall Foundations on Soil

β =	0.00	degrees	0 Radians
Avg. dist. face of Abutment Rt. of C/L	2.00	feet	As shown in B&MRR drawing, 1895
H =	18.99	feet	Includes raised grade
Elev. Top of fill =	77.29	feet	Final Elevation
h =	21.99	feet	Includes raised grade
Footing Thickness =	3	feet	Estimated from B&MRR drawing, 1895
Wt behind Abut., V_1 =	2.31	Kips	See Tab: *Existing Abutment*
Load from Wall, W_1 =	11.22	Kips	See Tab: *Existing Abutment*
Wt of Footing, W_2 =	5.10	Kips	Note: Above GWT
Resultant behind Abut., X_{V1} =	1.61	feet	See Tab: *Existing Abutment*
Resultant of Wall, X_{W1} (Rt. of C/L) =	0.02	feet	See Tab: *Existing Abutment*
Lateral earth pressure, K_{aF} =	0.30		K based structural fill on MassDOT criteria see ***274047 Manch Street Bridge Lateral Pressure 20221215.xlsx***
Lateral Force of Fill, F_T =	7.62	Kips	
e =	2.81		
Normal Pressure, σ_n=	4.25	ksf	
Change in Normal Pressure, $\Delta\sigma_n$=	0.42		Assumes wt of pedestrian bridge same as wt. of railroad bridge

Manchester Street Bridge - South Abutment, Lawrence, MA
PN: 274047

Load for Existing South Abutment

Objective: Calculate the load (weight) and location of the resultant for the existing abutments

References: 1) Drawing of bridge *B&M Railroad No. 213 Manchester St. Bridge* dated September 1895

Assumptions: 1) Abutment geometry is as shown in the drawings.
2) Granite blocks are 2 feet thick; top course is 1 foot thick.
3) Density of granite is 170 pounds per cubic foot (pcf)
4) Batter is negligible (i.e., face is vertical)
3) Abutments extend 3 feet below the exisitng ground surface.

Solution:

Unit Weight of Water (γ_w):	62.4 pcf		
Unit Weight of granite (γ_c):	170 pcf		Based on literature review
Footing Elevation:	58.3 ft, NAVD-88		As shown in drawings, TEC 2022
Footing Width:	10.0 ft		As shown in B&MRR drawing, 1895
Ground Surface (GS) Elevation:	61.0 ft, NAVD-88		As shown in drawings, TEC 2022
Groundwater Elevation:	56.7 ft, NAVD-88		Based on Boring Logs
Top of Glacial Soils Elevation:	55.7 ft, NAVD-88		Based on Boring Logs
Avg. dist. face of Abutment Rt. of C/L =	2.00 feet		Estimated from B&MRR drawing, 1895

Load from Abutment

Unit No.	Wall Level (Below top)	Width (feet)	Thickness (feet)	Weight (pounds)	C/L Location (ft from face)	Moment (+) (ft-lbs)
1	-1	2.0	1	340	1.5	510
2	-2	4.0	1	680	2.5	1,700
3	-4	4.0	2	1,360	2.5	3,400
4	-6	4.0	2	1,360	2.5	3,400
5	-8	5.0	2	1,700	3.0	5,100
6	-10	5.0	2	1,700	3.0	5,100
7	-12	6.0	2	2,040	3.5	7,140
8	-14	6.0	2	2,040	3.5	7,140

Totals = 11,220 33,490 (ft-lbs)
Location of Resultant Wall Load from Face = 2.98 feet
eccentricity from C/L of Wall Load = 0.02 feet
Left of C/L

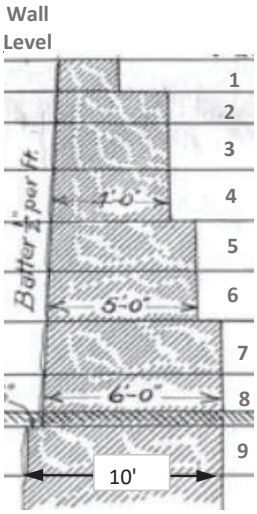

Load from Soil Behind Abutment Note: Above GWT

Wall Level (from top)	Width (feet)	Thickness (feet)	Weight (pounds)	C/L Location (ft from face)	Moment (+) (ft-lbs)
1	4.0	1	420	4.5	-1,890
2	2.0	1	210	5.5	-1,155
3	2.0	2	420	5.5	-2,310
4	2.0	2	420	5.5	-2,310
5	1.0	2	210	6.0	-1,260
6	1.0	2	210	6.0	-1,260
7	0.0	2	0	6.5	0
8	0.0	2	0	6.5	0

Totals = 1,890 -10,185 (ft-lbs)
Location of Resultant Soil Load from Face = -5.39 feet
eccentricity from C/L of Soil Load = 1.61 feet
Left of C/L

Calculated by: WAN
Date: 10/18/2022
Revdised: 12/19/2022

Checked by: AJ
Date: 10/28/2022

Revision: 6
Status: Final

Manchester Street Bridge - South Abutment, Lawrence, MA
PN: 274047
Page: 4 of 7

Net Loads and moments (due to Soil and Abutment Units):

Item	Weight, lb	Moment, lb.ft
Abutment Units	11,220	33,490
Fill	1,890	-10,185
Total=	13,110	23,305

Location of Resultant Total Load from Face = 1.78 feet

eccentricity from C/L of Total Load = 1.22 feet

Right of C/L

Calculated by: WAN
Date: 10/18/2022
Revdised: 12/19/2022

Checked by: AJ
Date: 10/28/2022

Revision: 6
Status: Final

Service Limit State (Hough Method) Bearing Resistance Calculation for Existing South Abutment

Total Settlement, $S_t = S_e + S_c + S_s$ Eq. 10.6.2.4.1-1

S_e = Elastic Settlement (feet)

S_c = Primary Consolidation Settlement (feet) = 0 Feet for Chesionless Soils

S_s = Secondary Settlement (feet) = 0 Feet for Chesionless Soils

Use Hough Method (AASHTO LFRD-BDS, 2020, Article 10.6.2.4.2b) to Estimate Elastic Settlement

$$S_e = \sum_{i=1}^{n} \Delta H_i \qquad (10.6.2.4.2b\text{-}1)$$

Where:

$$\Delta H_i = H_c \frac{1}{C'} \log\left(\frac{\sigma'_o + \Delta\sigma_v}{\sigma'_o}\right) \qquad (10.6.2.4.2b\text{-}2)$$

n = number of layers within stress zone (max. layer thickness 10 ft)

ΔH_i = Elastic settlement of layer (feet)

H_c = Initial height of layer i (feet)

C' = Bearing capacity index from Figure 10.6.2.4.2b-1

σ'_o = Initial vertical effective stress at midpoint of layer i (ksf)

$\Delta\sigma'_o$ = Increase in vertical stress at midpoint of layer i (ksf)

Distribution of Vertical Stress (AASHTO 2020)

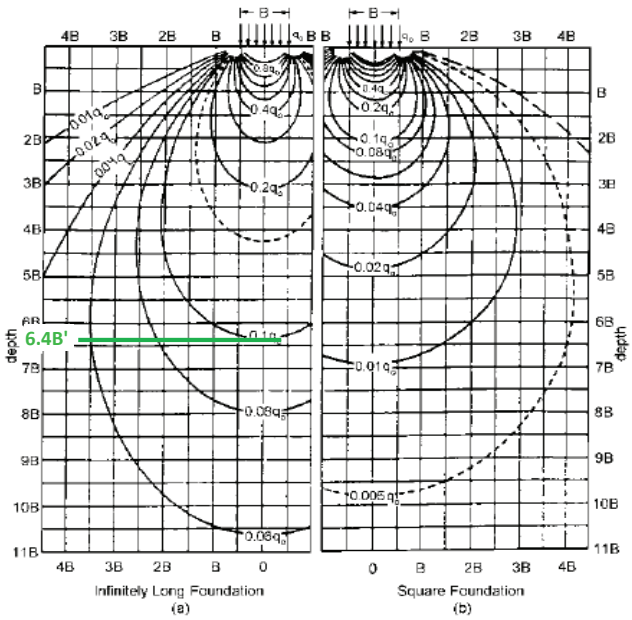

Figure 10.6.2.4.1-1—Boussinesq Vertical Stress Contours for Continuous and Square Footings Modified after Sowers (1979)

Bearing Capacity Index vs Corrected SPT (AASHTO 2020)

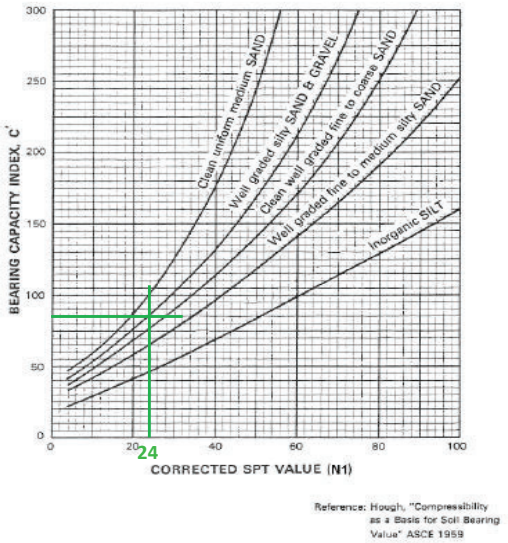

Figure 10.6.2.4.2b-1—Bearing Capacity Index versus Corrected *SPT* (Hough, 1959, as modified in Samtani and Nowatzki, 2006)

Note: AASHTO LRFD-BDS (2020) 10.6.2.4.2.b states: "SPT blow counts shall be corrected as specified in Article 10.4.6.2.4 for depth, i.e. overburden stress, and SPT hammer efficiency, before correlating the SPT blow counts to the bearing capacity index, C'."

Calculation of Elastic Settlment - Hough Method

Effective Width (B'):	4.4	feet						
Effective Length (L'):	41.8	feet	Ratio L':B' =	9.5	≈ 10, so Infinity Long Foundation			
Depth to $0.1(q_o)$ =	6.4B' =	28.1	feet					
n =	3	layers	Assumed					
$H_{c1} = H_{c2} = Hc_3$ =	9.35	feet						
C' =	85		$N_{1,60}$ =	24	blows per foot for well-grade fine to coarse sand			
Depth to Water, ft=	2.24				See ***274047 SPT Calcs - Manch St Bridge 20221019.xlsx***			
d_{o1} =	4.68	feet bgs	To midpoint Layer C1 =	1.07	* B' =	4.68	feet, bgs	
Depth below footing d_{o2} =	14.03	feet bgs	To midpoint Layer C1 =	3.20	* B' =	14.03	feet, bgs	
d_{o3} =	23.39	feet bgs	To midpoint Layer C1 =	5.33	* B' =	23.39	feet, bgs	
σ'_{o1} =	2.30	ksf	At midpoint Layer C1					
GWT at Elev. 56.1 ft σ'_{o2} =	2.88	ksf	At midpoint Layer C2					
σ'_{o3} =	3.47	ksf	At midpoint Layer C3					
$\Delta\sigma_1$ =	0.21	ksf	At midpoint Layer C1 =	1.07	* B' =	4.68	feet, bgs	
Based on Boussinesq pressure distribution $\Delta\sigma_2$ =	0.08	ksf	At midpoint Layer C2 =	3.20	* B' =	14.03	feet, bgs	
$\Delta\sigma_3$ =	0.05	ksf	At midpoint Layer C3 =	5.33	* B' =	23.39	feet, bgs	
ΔH_1 =	0.004	feet						
ΔH_2 =	0.001	feet						
ΔH_3 =	0.001	feet						

S_e =	**0.01**	**feet =**	**0.07 inches**

Find Net Load Based on Allowable Differential Settlement Using Hough Method

FHWA-RC/TD-10-001 states maximum angular distortion should be less than 1/250

Bridge span = 55.3 feet, c-to-c (square)

So, allowable differential settlement = 2.65 inches

Conservatively, Calculate Net Load Based on 1-inch Differential Settlement

Net Normal Pressure =	**8.33**	**ksf**	
$\Delta\sigma_{1,max}$ =	4.17	ksf	At midpoint Layer C1
$\Delta\sigma 2_{,max}$ =	1.67	ksf	At midpoint Layer C2
$\Delta\sigma 3_{,max}$ =	1.00	ksf	At midpoint Layer C7
ΔH_1 =	0.593	in	
ΔH_2 =	0.262	in	
ΔH_3 =	0.145	in	
S_e =	**1.00**	**inches**	
Net Change in Stress at base of Footing =	**8.33**	**ksf**	

Calculated by: WAN
Date: 10/18/2022
Revdised: 12/19/2022

Checked by: AJ
Date: 10/28/2022

Revision: 6
Status: Final

TRC

Manchester Street Bridge - South Abutment, Lawrence, MA
PN: 274047

Strength Limit State Bearing Resistance Calculation for Existing South Abutment

Factored Bearing Resistance: $q_R = q_n * \phi_b$		Eq. 10.6.3.1.1-1	
Resistance Factor (ϕ_b) =	0.45	Tb. 10.5.5.2.2-1	
Nominal Resistance (q_n) =			
$q_n = c*N_{cm} + \gamma*D_f*N_m*C_{wq} + 0.5*\gamma*B'*N_{\gamma m}*C_{w\gamma}$		Eq. 10.6.3.1.2a-1	
$N_{qm} = N_q*s_q*d_q*i_q$		Eq. 10.6.3.1.2a-3	
Bearing Capacity Factor (N_q)	23.2	Tb. 10.6.3.1.2a-1	
Shape Correction Factor (s_q)	1.07	Tb. 10.6.3.1.2a-3	
Load Inclination Factor (i_q)	1.00	Eq. 10.6.3.1.2a-7	Horizontal load = 0 (assumed)
Depth Correction Factor (d_q)	1.3	Eq. 10.6.3.1.2a-10	$= 1 + 2\tan\phi_f(1-\sin\phi_f)^2\arctan(D_f/B')$
N_{qm}=	32.74		*(Df, B' - see Tab: Calcuations)*
$N_{cm} = N_c*s_c*i_c$		Eq. 10.6.3.1.2a-2	
Bearing Capacity Factor (N_c)	35.5	Tb. 10.6.3.1.2a-1	
Shape Correction Factor (s_c)	1.07	Tb. 10.6.3.1.2a-3	
Load Inclination Factor (i_c)	1.00	Eq. 10.6.3.1.2a-6	Horizontal load = 0 (assumed)
N_{cm} =	37.93		
$N_{\gamma m} = N_\gamma*s_\gamma*i_\gamma$		Eq. 10.6.3.1.2a-4	
Bearing Capacity Factor (N_γ or $N_{\gamma q}$)	30.2	Tb. 10.6.3.1.2a-1	
Shape Correction Factor (s_γ)	0.96	Tb. 10.6.3.1.2a-3	
Load Inclination Factor (i_γ)	1.00	Eq. 10.6.3.1.2a-8	Horizontal load = 0 (assumed)
$N_{\gamma m}$=	28.93		
Groundwater Coefficients		Tb. 10.6.3.1.2a-2	
(C_{wq})	1.00		
($C_{w\gamma}$)	0.77		
q_n=	**16 ksf**		
q_R=	**7.2 ksf**		

Calculated by: WAN
Date: 10/18/2022
Revdised: 12/19/2022

Checked by: AJ
Date: 10/28/2022

Revision: 6
Status: Final

Bearing Resistance and Settlement Calculations for Existing Wing Walls

Objective: Confim that the existing footings are adequate by evaluating bearing resistance and settlement based on the effective footing width.

References:
1) AASHTO LRFD Bridge Design Specifications: 9th Edition (2020)
2) Borings BB-1 and BB-2 performed by TRC July 7 and 10, 2017, respectively.
3) Drawing of bridge *B&M Railroad No. 213 Manchester St. Bridge* dated September 1895
4) "Sketch Plans of Superstructure Replacement, Lawrence,Lawrence Manchester Rail Trail Over Manchester Street," TEC, dated June 9, 2022
5) Calculation of $N_{1,60}$ values presented spreadsheet entitled *274047 SPT Calcs - Manch St Bridge 20221216.xlsx*

Assumptions:
1) Borings BB-1 and BB-2 are representative of the soils at the site.
2) Proposed footing bottom of footing is assumed at El 58.3 feet (TEC, 2022)
3) Footing with minimum width (North Abutment, west side) is conservative.
4) Existing footings are 2-foot thick granite blocks
5) Eccentricity as indicated below.
6) Glacial Soils underlay the exisitng footings.

Solution:

Bearing Soil Properties/Subsurface Information

Unit Weight of Glacial Soil ($\gamma_{gs,m}$):	120	pcf	γ based on moist Glacial Soils properties
Unit Weight of Glacial Soil ($\gamma_{gs,sat}$):	125	pcf	γ based on saturated Glacial Soils properties
Unit Weight of Existing Fill ($\gamma_{ef,m}$):	105	pcf	γ based on moist Existing Fill properties
Unit Weight of Existing Fill ($\gamma_{ef,sat}$):	120	pcf	γ based on saturated Existing Fill properties
Unit Wt of Structural Fill ($\gamma_{F,m}$):	120	pcf	γ based on moist Structural Fill properties.
Unit Weight of Water (γ_w):	62.4	pcf	
Unit Weight of granite (γ_c):	170	pcf	Based on literature review
Cohesion of Bearing Soil (c):	0	psf	
Friction Angle of Bearing Soil (ϕ_f):	32	degrees	ϕ_f based on Glacial Soils properties
Friction Angle of Structural Fill (ϕ_{sf}):	32	degrees	ϕ_{sf} assumed for structural fill
Friction Angle of Exisitng Fill (ϕ_{ef}):	30	degrees	ϕ_{ef} based on existing fill properties

Soil Description: Generally based on boring BB-2; however, use average $N_{1,60}$ value for Glacial Soils underlaying both abutments, where applicable, because this value is lower and more conservative.

Base of Footing Elevation:	58.3	ft, NAVD-88	As shown in drawings, TEC 2022
Ground Surface Elevation (front of wall):	61.0	ft, NAVD-88	As shown in drawings, TEC 2022
Groundwater Elevation:	56.7	ft, NAVD-88	Based on Boring Log BB-2
Top of Glacial Soils Elevation:	58.3	ft, NAVD-88	Based on Boring Log BB-2
Height of Raised Embankment Grade:	4.0	ft	As shown in drawings, TEC 2022
Height of Raised Grade	2.0	ft	Assumed based on gradual slope from pathway to top of w

Footing Geometry

Minimum Footing Depth (D_f):	2.7	ft	As shown in drawings, TEC 2022
Groundwater Depth Below GS:	4.3	ft	Based on Boring Logs
Width (B):	6.2	ft	As shown in B&MRR drawing, 1895
Length (L):	12.5	ft	As shown in B&MRR drawing, 1895
Width Eccentricity (e_B):	0.38	ft	
Length Eccentricity (e_L):	0	ft	
Effective Width (B'):	5.43	ft	
Effective Length (L'):	12.50	ft	

Calculated by: WAN
Date: 10/18/2022
Revised: 12/19/2022

Checked by: AJ
Date: 10/28/2022

Revision: 6
Status: Final

Bearing Resistance and Settlement Calculations for Existing Wing Walls

Calculation of Eccentricity

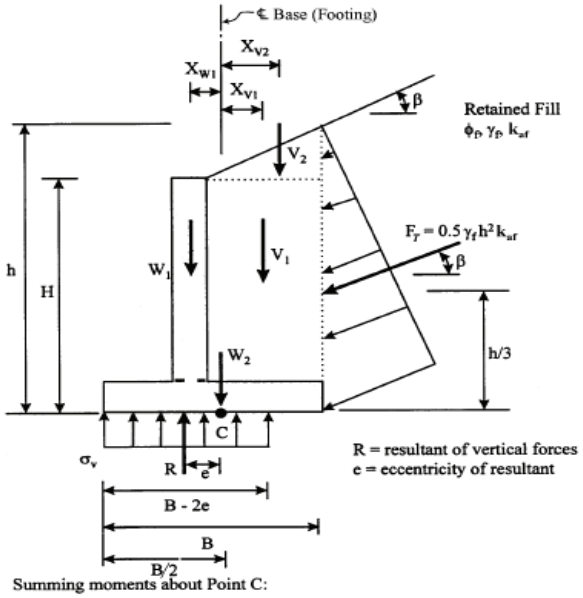

Summing moments about Point C:

$$e = \frac{\left(F_T Cos\beta\right)h/3 - \left(F_T \sin\beta\right)B/2 - V_1 X_{V1} - V_2 X_{V2} + W_1 X_{W1}}{V_1 + V_2 + W_1 + W_2 + F_T \sin\beta}$$

Figure 11.6.3.2-1—Bearing Stress Criteria for Conventional Wall Foundations on Soil

β =	0.00	degrees	0 Radians
Avg. dist. face of Abutment Rt. of C/L	1.10	feet	As shown in B&MRR drawing, 1895
H =	5.50	feet	Includes raised grade
Elev. Top of fill =	67.80	feet	Final Elevation
h =	7.50	feet	Includes raised grade
Footing Thickness =	2.00	feet	Estimated from B&MRR drawing, 1895
Wt behind Abut., V_1 =	1.26	Kips	See Tab: *Existing Abutment*
Load from Wall, W_1 =	9.66	Kips	See Tab: *Existing Abutment*
Wt of Footing, W_2 =	2.11	Kips	Note: Above GWT
Resultant soil behind Abut., X_{V1} =	-1.74	feet	See Tab: *Existing Abutment*
Resultant of Wall, X_{W1} (left of C/L) =	0.06	feet	See Tab: *Existing Abutment*
Active lateral earth pressure, K_{aF} =	0.30		K based structural fill on MassDOT criteria see ***274047 Manch Street Bridge Lateral Pressure 20221215.xlsx***
Lateral Force of Fill, F_T =	0.89	Kips	
e =	0.38		
Normal Pressure, σ_n=	2.40	ksf	
Change in Normal Pressure, $\Delta\sigma_n$=	0.24		Assumes wt of pedestrian bridge same as wt. of railroad bridge

Manchester Street Bridge - Existing Wings Walls, Lawrence, MA
PN: 274047

Load for Existing Wing Walls

Objective: Calculate the load (weight) and location of the resultant for the existing Wingwalls

References: 1) Drawing of bridge *B&M Railroad No. 213 Manchester St. Bridge* dated September 1895

Assumptions:
1) Wing wall geometry is as indicated in the drawings.
2) Granite blocks are 2 feet thick; top course is 1 foot thick.
3) Density of granite is 170 pounds per cubic foot (pcf)
4) Batter is negligible (i.e., face is vertical)
3) Wing walls extend 2.7 feet below the exisitng ground surface (inc. leveling course).

Solution:

Unit Weight of Water (γ_w):	62.4	pcf	
Unit Weight of granite (γ_c):	170	pcf	Based on literature review
Footing Elevation:	58.3	ft, NAVD-88	As shown in drawings, TEC 2022
Footing Width:	6.2	ft	As shown in B&MRR drawing, 1895
Ground Surface (GS) Elevation:	61.0	ft, NAVD-88	As shown in drawings, TEC 2022
Groundwater Elevation:	56.7	ft, NAVD-88	Based on Boring BB-2
Top of Glacial Soils Elevation:	55.7	ft, NAVD-88	Based on Boring BB-2

Load from Wingwall

Unit No.	Wall Level (Below top)	Width (feet	Thickness (feet)	Weight (pounds)	Level C/L (feet right of Wall C/L)	Moment (ft-lbs)
1	-1	2.0	2	510	1.60	816
2	-3	4.0	2	1,360	0.60	816
3	-7	5.5	4	3,740	-0.15	-561
4	-9	5.7	2	1,938	-0.25	-485
5	-11	6.2	2	2,108	0.00	0
			Totals =	**9,656**		**587 (ft-lbs)**
				eccentricity from C/L of Wall Load =		**0.06 feet**
						Right of Wall C/L

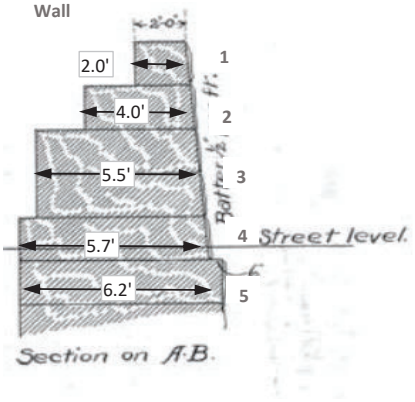

Load from Soil Behind Wingwall Note: Above GWT

Unit No.	Wall Level (from top)	Width (feet)	Thickness (feet)	Weight (pounds)	Level C/L (feet right of Wall C/L)	Moment (ft-lbs)
1	-1	3.7	2	583	-1.25	-728
2	-3	1.7	2	357	-2.25	-803
3	-7	0.2	4	84	-3.00	-252
4	-9	0.0	2	0	0.00	0
5	-11	0.0	2	0	0.00	0
			Totals =	**1,024**		**-1,784 (ft-lbs)**
				eccentricity from C/L of Soil Load =		**-1.74 feet**
						Left of Wall C/L

Net Loads and moments (due to Soil and Wingwall Units):

Item	Weight, lb	Moment, lb.ft
Wingwall Units	9,656	587
Fill	1,024	-1,784
Total=	10,680	-1,197
eccentricity from C/L of Total Load =	**-0.11 feet**	
Left of Wall C/L		

Calculated by: WAN
Date: 10/18/2022
Revised: 12/19/2022

Checked by: AJ
Date: 10/28/2022

Revision: 6
Status: Final

Service Limit State (Hough Method) Bearing Resistance Calculation for Existing Wing Walls

Total Settlement, $S_t = S_e + S_c + S_s$ Eq. 10.6.2.4.1-1

S_e = Elastic Settlement (feet)

S_c = Primary Consolidation Settlement (feet) = 0 Feet for Chesionless Soils

S_s = Secondary Settlement (feet) = 0 Feet for Chesionless Soils

Use Hough Method (AASHTO LFRD-BDS, 2020, Article 10.6.2.4.2b) to Estimate Elastic Settlement

$$S_e = \sum_{i=1}^{n} \Delta H_i \qquad (10.6.2.4.2b\text{-}1)$$

Where:

$$\Delta H_i = H_c \frac{1}{C'} \log\left(\frac{\sigma'_o + \Delta\sigma_v}{\sigma'_o}\right) \qquad (10.6.2.4.2b\text{-}2)$$

n = number of layers within stress zone (max. layer thickness 10 ft)

ΔH_i = Elastic settlement of layer (feet)

H_c = Initial height of layer i (feet)

C' = Bearing capacity index from Figure 10.6.2.4.2b-1

σ'_o = Initial vertical effective stress at midpoint of layer i (ksf)

$\Delta\sigma'_o$ = Increase in vertical stress at midpoint of layer i (ksf)

Distribution of Vertical Stress (AASHTO 2020)

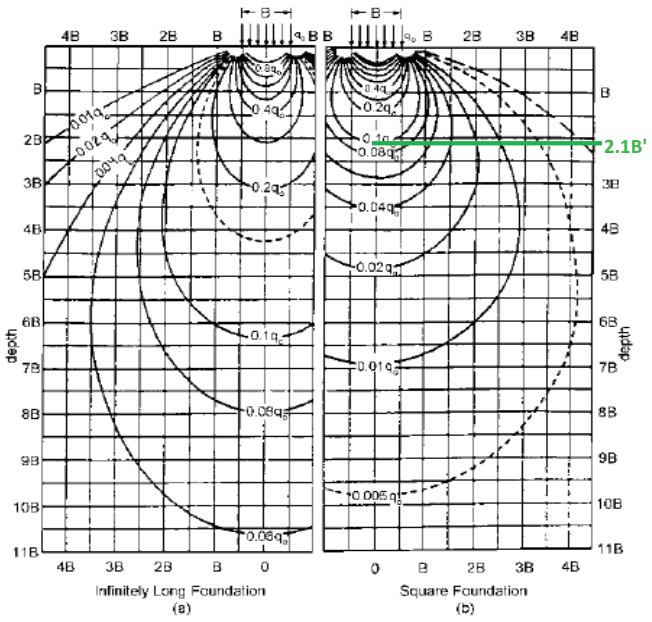

Figure 10.6.2.4.1-1—Boussinesq Vertical Stress Contours for Continuous and Square Footings Modified after Sowers (1979)

Bearing Capacity Index vs Corrected SPT (AASHTO 2020)

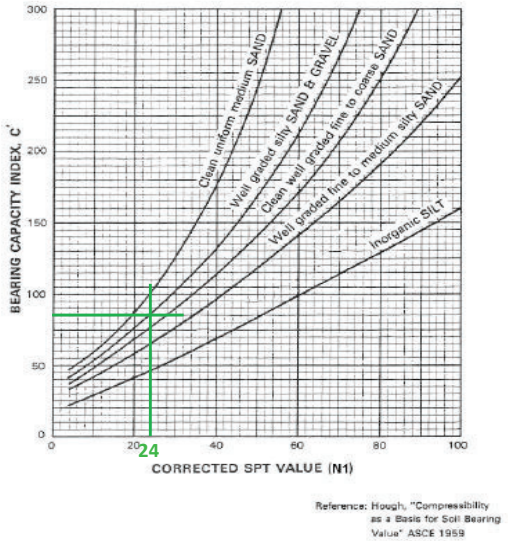

Figure 10.6.2.4.2b-1—Bearing Capacity Index versus Corrected *SPT* (Hough, 1959, as modified in Samtani and Nowatzki, 2006)

Note: AASHTO LRFD-BDS (2020) 10.6.2.4.2.b states: "SPT blow counts shall be corrected as specified in Article 10.4.6.2.4 for depth, i.e. overburden stress, and SPT hammer efficiency, before correlating the SPT blow counts to the bearing capacity index, C'."

Calculation of Elastic Settlment - Hough Method

Effective Width (B'):	5.4	feet				
Effective Length (L'):	12.5	feet	Ratio L':B' =	2.3	< 10, so Square Foundation	
Depth to $0.1(q_o)$ =	2.1B' =	11.4	feet			
n =	2	layers	Assumed			
$H_{c1} = H_{c2}$ =	5.70	feet				
C' =	85	$N_{1,60}$ =	24	blows per foot for well-grade fine to coarse sand		
				See ***274047 SPT Calcs - Manch St Bridge 20221216.xlsx***		
				Use average $N_{1,60}$ blow counts for Glacial Soils.		
Depth to Water =	4.29	feet				
Depth below footing	d_{o1} =	2.85	feet bgs	To midpoint Layer C1 =	0.53 * B'	
	d_{o2} =	8.55	feet bgs	To midpoint Layer C2 =	1.58 * B'	
GWT at Elev. 56.7 ft	σ'_{o1} =	0.92	ksf	At midpoint Layer C1		
	σ'_{o2} =	1.36	ksf	At midpoint Layer C2		
Based on Boussinesq pressure distribution for Square Fndn	$\Delta\sigma_1$ =	0.17	ksf	At midpoint Layer C1 =	0.53 * B'	Load factor = 0.70
	$\Delta\sigma_2$ =	0.04	ksf	At midpoint Layer C2 =	1.58 * B'	Load factor = 0.18
	ΔH_1 =	0.001	feet			
	ΔH_2 =	0.001	feet			
	S_e =	**0.001**	**feet =**	**0.02**	**inches**	

Find Net Load Based on Differential Settlement for 1-inch of settlement

Net Normal Pressure =	**9.11**	**ksf**		
$\Delta\sigma_{1,max}$ =	6.37	ksf	At midpoint Layer C1	
$\Delta\sigma_{2,max}$ =	1.64	ksf	At midpoint Layer C1	
ΔH_1 =	0.72	in		
ΔH_2 =	0.28	in		
S_e =	**1.00**	**inches**		
Net Change in Stress at base of Footing =			**9.11**	**ksf**

Calculated by: WAN
Date: 10/18/2022
Revised: 12/19/2022

Checked by: AJ
Date: 10/28/2022

Revision: 6
Status: Final

TRC

Manchester Street Bridge - Existing Wings Walls, Lawrence, MA
PN: 274047

Strength Limit State Bearing Resistance Calculation for Existing Wing Walls

Factored Bearing Resistance: $q_R = q_n * \phi_b$		Eq. 10.6.3.1.1-1	
Resistance Factor (ϕ_b) =	0.45	Tb. 10.5.5.2.2-1	
Nominal Resistance (q_n) =			
$q_n = c*N_{cm} + \gamma*D_f*N_m*C_{wq} + 0.5*\gamma*B'*N_{\gamma m}*C_{w\gamma}$		Eq. 10.6.3.1.2a-1	
$N_{qm} = N_q*s_q*d_q*i_q$		Eq. 10.6.3.1.2a-3	
Bearing Capacity Factor (N_q)	23.2	Tb. 10.6.3.1.2a-1	
Shape Correction Factor (s_q)	1.27	Tb. 10.6.3.1.2a-3	
Load Inclination Factor (i_q)	1.00	Eq. 10.6.3.1.2a-7	Horizontal load = 0 (assumed)
Depth Correction Factor (d_q)	1.3	Eq. 10.6.3.1.2a-10	$= 1 + 2\tan\phi_f(1-\sin\phi_f)^2\arctan(D_f/B')$
N_{qm}=	37.49		*(Df, B' - see Tab: Calcuations)*
$N_{cm} = N_c*s_c*i_c$		Eq. 10.6.3.1.2a-2	
Bearing Capacity Factor (N_c)	35.5	Tb. 10.6.3.1.2a-1	
Shape Correction Factor (s_c)	1.28	Tb. 10.6.3.1.2a-3	
Load Inclination Factor (i_c)	1.00	Eq. 10.6.3.1.2a-6	Horizontal load = 0 (assumed)
N_{cm} =	45.58		
$N_{\gamma m} = N_\gamma*s_\gamma*i_\gamma$		Eq. 10.6.3.1.2a-4	
Bearing Capacity Factor (N_γ or $N_{\gamma q}$)	30.2	Tb. 10.6.3.1.2a-1	
Shape Correction Factor (s_γ)	0.83	Tb. 10.6.3.1.2a-3	
Load Inclination Factor (i_γ)	1.00	Eq. 10.6.3.1.2a-8	Horizontal load = 0 (assumed)
$N_{\gamma m}$=	24.95		
Groundwater Coefficients		Tb. 10.6.3.1.2a-2	
(C_{wq})	1.00		
($C_{w\gamma}$)	0.70		
q_n=	**18 ksf**		
q_R=	**8.1 ksf**		

Calculated by: WAN
Date: 10/18/2022
Revised: 12/19/2022

Checked by: AJ
Date: 10/28/2022

Revision: 6
Status: Final

Bearing Resistance and Settlement Calculations for Proposed Wing Walls

Objective: Confim that the proposed 10-foot footings are adequate by evaluating bearing resistance and settlement based on the effective footing width.

References:
1) AASHTO LRFD Bridge Design Specifications: 9th Edition (2020)
2) Borings BB-1 and BB-2 performed by TRC July 7 and 10, 2017, respectively.
3) Drawing of bridge *B&M Railroad No. 213 Manchester St. Bridge* dated September 1895
4) "Sketch Plans of Superstructure Replacement, Lawrence,Lawrence Manchester Rail Trail Over Manchester Street," TEC, dated June 9, 2022 (TEC 2022a)
5) Calculation of $N_{1,60}$ values presented spreadsheet entitled *274047 SPT Calcs - Manch St Bridge 20221216.xlsx*
6) Cemented stone masonry wall foundation depth and design based on "LMRC Rail Trail Cross Section 42 of 65" prepared by TEC, dated October 28, 2022 (TEC 2022b)
7) Wall dimension based on Cross Section 74+50, TEC, 2022b

Assumptions:
1) Borings BB-1 and BB-2 are representative of the soils at the site.
2) Proposed footing bottom of footing at El 69 feet is underlain by 2 feet of proposed structural fill, so the base of foundation is at El. 67 feet (TEC, 2022b)
3) If footing with minimum dimensions is stable (North Abutment, west side) other footings are stable.
4) Proposed footings will be cast-in-place concrete.
5) Eccentricity as indicated below.

Solution:

Bearing Soil Properties/Subsurface Information

Unit Weight of Glacial Soil ($\gamma_{gs,m}$):	120	pcf	γ based on moist Glacial Soils properties
Unit Weight of Glacial Soil ($\gamma_{gs,sat}$):	125	pcf	γ based on saturated Glacial Soils properties
Unit Weight of Existing Fill ($\gamma_{ef,m}$):	105	pcf	γ based on moist Existing Fill properties
Unit Weight of Existing Fill ($\gamma_{ef,sat}$):	120	pcf	γ based on saturated Existing Fill properties
Unit Wt of Structural Fill ($\gamma_{F,m}$):	120	pcf	γ based on moist Proposed Structural Fill properties.
Unit Weight of Water (γ_w):	62.4	pcf	
Unit Weight of Masonry Wall (γ_{MW}):	165	pcf	Assumed based on unit wt. of granite and concrete
Unit Weight of Concrete (γ_c):	150	pcf	Assumed
Cohesion of Bearing Soil (c):	0	psf	c based on Glacial Soils properties
Friction Angle of Bearing Soil (ϕ_f):	32	degrees	ϕ_f based on Glacial Soils properties
Friction Angle of Structural Fill (ϕ_{sf}):	32	degrees	ϕ_{sf} assumed for Proposed Structural Fill
Friction Angle of Exisitng Fill (ϕ_{ef}):	30	degrees	ϕ_{ef} based on Existing Fill properties

Soil Description: Based on BB-1 and BB-2 borings, Existing Fill is located below the footings when 24 inches of crushed stone placed beneath footings.

Base of Footing Elevation:	67.0	ft, NAVD-88	As shown in drawings, TEC 2022 (inc. 2 ft. gravel)
Ground Surface Elevation (front of wall):	72.0	ft, NAVD-88	As shown in drawings, TEC 2022
Groundwater Elevation:	56.7	ft, NAVD-88	Based on Boring Logs
Top of Glacial Soils Elevation:	55.7	ft, NAVD-88	Based on Boring Logs
Height of Raised Grade	4.0	ft	As shown in drawings, TEC 2022

Footing Geometry

Minimum Footing Depth (D_f):	4	ft	As shown in drawings, TEC 2022
Groundwater Depth Below GS:	15.3	ft	Based on Boring Logs
Width (B):	5	ft	As shown in drawings, TEC 2022 (Section 74+50)
Length (L):	50	ft	Length between cross-sections, TEC 2022
Width Eccentricity (e_B):	0.15	ft	
Length Eccentricity (e_L):	0	ft	
Effective Width (B'):	4.69	ft	
Effective Length (L'):	50	ft	

Calculated by: WAN
Date: 11/03/2022
Revised: 01/09/2023

Checked by: AJ
Date: 11/03/2022

Revision: 6
Status: Final

Bearing Resistance and Settlement Calculations for Proposed Wing Walls

Calculation of Eccentricity

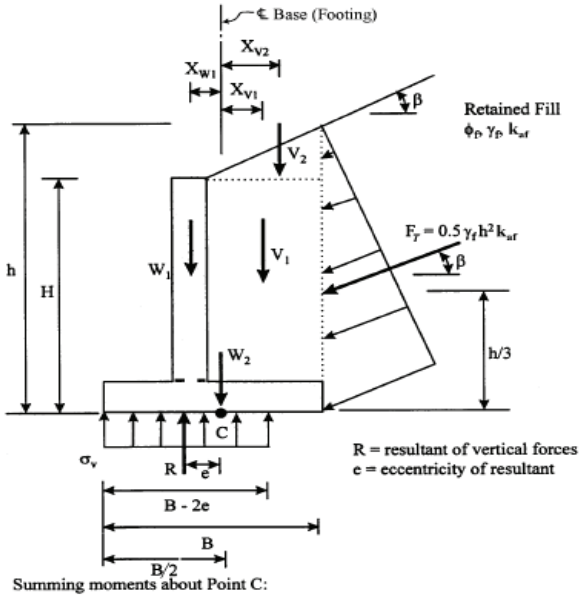

Summing moments about Point C:

$$e = \frac{\left(F_T Cos\beta\right)h/3 - \left(F_T \sin\beta\right)B/2 - V_1 X_{V1} - V_2 X_{V2} + W_1 X_{W1}}{V_1 + V_2 + W_1 + W_2 + F_T \sin\beta}$$

Figure 11.6.3.2-1—Bearing Stress Criteria for Conventional Wall Foundations on Soil

β =	14.32 degrees	0.25 Radians	for Cross Section 74+50
H =	9.25 feet	Includes footing thickness	
Elev. Top of fill =	78.00 feet	Measured from Cross Section 74+50	
h =	11.00 feet	Top of Fill - Base of Footing elevs	
Footing Thickness =	2 feet	Measured from Cross Section 74+50	
Stone Base Thickness =	2 feet	Crushed stone base for footing	
Stone Base Width =	5 feet	Measured from Cross Section 74+50	
Wt behind Abut., $V_1 + V_2$ =	2.15 Kips	Measured from Cross Section 74+50	
Average Thickness of Wall =	2.75 feet	Measured from Cross Section 74+50	
Load from Wall, W_1 =	4.31 Kips	Note: Above GWT	
Wt of Footing, W_2 =	1.65 Kips	Note: Above GWT	
Resultant behind Wall, $X_{V1\&V2}$ =	1.50 feet		
Resultant of Wall, X_{W1}=	-0.25 feet	Based on drawing, TEC 2022	
Active lateral earth pressure, K_{aF} =	0.30	K based structural fill on MassDOT criteria see ***274047 Manch Street Bridge Lateral Pressure 20221215.xlsx***	
Lateral Force of Fill, F_T =	1.91 Kips		
e =	0.15		
Normal Pressure, σ_n=	1.73 ksf		
Change in Normal Pressure, $\Delta\sigma_n$=	0.48 ksf, Based on raised grade behind wall		

Service Limit State (Hough Method) Bearing Resistance Calculation for Proposed Wing Walls

Total Settlement, $S_t = S_e + S_c + S_s$ Eq. 10.6.2.4.1-1

S_e = Elastic Settlement (feet)

S_c = Primary Consolidation Settlement (feet) = 0 Feet for Chesionless Soils

S_s = Secondary Settlement (feet) = 0 Feet for Chesionless Soils

Use Hough Method (AASHTO LFRD-BDS, 2020, Article 10.6.2.4.2b) to Estimate Elastic Settlement

$$S_e = \sum_{i=1}^{n} \Delta H_i \qquad (10.6.2.4.2b\text{-}1)$$

Where:

$$\Delta H_i = H_c \frac{1}{C'} \log\left(\frac{\sigma'_o + \Delta\sigma_v}{\sigma'_o}\right) \qquad (10.6.2.4.2b\text{-}2)$$

n = number of layers within stress zone (max. layer thickness 10 ft)

ΔH_i = Elastic settlement of layer (feet)

H_c = Initial height of layer i (feet)

C' = Bearing capacity index from Figure 10.6.2.4.2b-1

σ'_o = Initial vertical effective stress at midpoint of layer i (ksf)

$\Delta\sigma'_o$ = Increase in vertical stress at midpoint of layer i (ksf)

Distribution of Vertical Stress (AASHTO 2020)

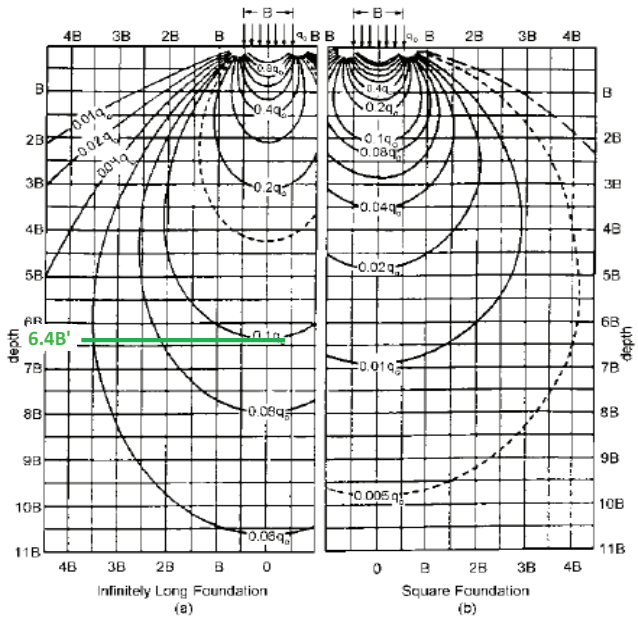

Figure 10.6.2.4.1-1—Boussinesq Vertical Stress Contours for Continuous and Square Footings Modified after Sowers (1979)

Bearing Capacity Index vs Corrected SPT (AASHTO 2020)

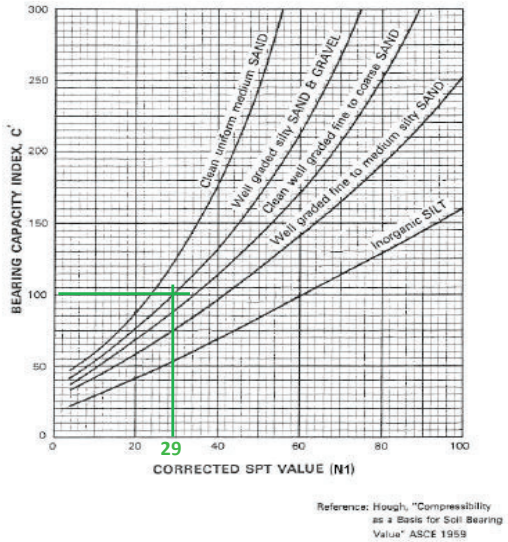

Figure 10.6.2.4.2b-1—Bearing Capacity Index versus Corrected *SPT* (Hough, 1959, as modified in Samtani and Nowatzki, 2006)

Note: AASHTO LRFD-BDS (2020) 10.6.2.4.2.b states: "SPT blow counts shall be corrected as specified in Article 10.4.6.2.4 for depth, i.e. overburden stress, and SPT hammer efficiency, before correlating the SPT blow counts to the bearing capacity index, C'."

Calculation of Elastic Settlment - Hough Method

Effective Width (B'):	4.69	feet						
Effective Length (L'):	50	feet		feet	Ratio L':B' =	10.7	> 10, so Infinity Long Foundation	
Depth to $0.1(q_o)$ =	6.4B' =		30.0	feet				
n =	3	layers		Assumed				
$H_{c1} = H_{c2} = Hc_3$ =	10.02	feet						
C' =	95		$N_{1,60}$ =	29	blows per foot for well-grade fine to coarse sand			
					See ***274047 SPT Calcs - Manch St Bridge 20221216.xlsx***			
					Use average $N_{1,60}$ blow counts for Glacial Soils.			
Depth to Water, ft=	10.29							
d_{o1} =	5.01	feet bgs			To midpoint Layer C1 =	1.07	* B' =	5.01 feet, bgs
Depth below footing d_{o2} =	15.02	feet bgs			To midpoint Layer C1 =	3.20	* B' =	15.02 feet, bgs
d_{o3} =	25.04	feet bgs			To midpoint Layer C1 =	5.33	* B' =	25.04 feet, bgs
σ'_{o1} =	1.50	ksf			At midpoint Layer C1			
GWT at Elev. 56.7 ft σ'_{o2} =	1.74	ksf			At midpoint Layer C2			
σ'_{o3} =	2.36	ksf			At midpoint Layer C3			
Based on Boussinesq $\Delta\sigma_1$ =	0.24	ksf			At midpoint Layer C1 =	1.07	* B' =	5.01 feet, bgs
pressure distribution for $\Delta\sigma_2$ =	0.10	ksf			At midpoint Layer C2 =	3.20	* B' =	15.02 feet, bgs
Infinitely Long Fndn $\Delta\sigma_3$ =	0.06	ksf			At midpoint Layer C3 =	5.33	* B' =	25.04 feet, bgs
ΔH_1 =	0.01	feet						
ΔH_2 =	0.00	feet						
ΔH_3 =	0.00	feet						
S_e =	**0.01**	**feet =**		**0.12**	**inches**			

Find Net Load Based on Differential Settlement for 1-inch of settlement

Net Normal Pressure =	**5.68**	**ksf**	
$\Delta\sigma_{1,max}$ =	2.84	ksf	At midpoint Layer C1
$\Delta\sigma 2_{,max}$ =	1.14	ksf	At midpoint Layer C2
$\Delta\sigma 3_{,max}$ =	0.68	ksf	At midpoint Layer C3
ΔH_1 =	0.58	in	
ΔH_2 =	0.28	in	
ΔH_3 =	0.14	in	
S_e =	**1.00**	**inches**	
Net Change in Stress at base of Footing =		**5.68**	**ksf**

Strength Limit State Bearing Resistance Calculation for Proposed Wing Walls

Factored Bearing Resistance: $q_R = q_n * \phi_b$		Eq. 10.6.3.1.1-1	
Resistance Factor (ϕ_b) =	0.45	Tb. 10.5.5.2.2-1	
Nominal Resistance (q_n) =			
$q_n = c*N_{cm} + \gamma*D_f*N_m*C_{wq} + 0.5*\gamma*B'*N_{\gamma m}*C_{w\gamma}$		Eq. 10.6.3.1.2a-1	
$N_{qm} = N_q*s_q*d_q*i_q$		Eq. 10.6.3.1.2a-3	
Bearing Capacity Factor (N_q)	23.2	Tb. 10.6.3.1.2a-1	
Shape Correction Factor (s_q)	1.06	Tb. 10.6.3.1.2a-3	
Load Inclination Factor (i_q)	1.00	Eq. 10.6.3.1.2a-7	Horizontal load = 0 (assumed)
Depth Correction Factor (d_q)	1.4	Eq. 10.6.3.1.2a-10	$= 1 + 2\tan\phi_f(1-\sin\phi_f)^2\arctan(D_f/B')$
N_{qm}=	34.74		*(Df, B' - see Tab: Calcuations)*
$N_{cm} = N_c*s_c*i_c$		Eq. 10.6.3.1.2a-2	
Bearing Capacity Factor (N_c)	35.5	Tb. 10.6.3.1.2a-1	
Shape Correction Factor (s_c)	1.06	Tb. 10.6.3.1.2a-3	
Load Inclination Factor (i_c)	1.00	Eq. 10.6.3.1.2a-6	Horizontal load = 0 (assumed)
N_{cm} =	37.68		
$N_{\gamma m} = N_\gamma*s_\gamma*i_\gamma$		Eq. 10.6.3.1.2a-4	
Bearing Capacity Factor (N_γ or $N_{\gamma q}$)	30.2	Tb. 10.6.3.1.2a-1	
Shape Correction Factor (s_γ)	0.96	Tb. 10.6.3.1.2a-3	
Load Inclination Factor (i_γ)	1.00	Eq. 10.6.3.1.2a-8	Horizontal load = 0 (assumed)
$N_{\gamma m}$=	29.07		
Groundwater Coefficients		Tb. 10.6.3.1.2a-2	
(C_{wq})	1.00		
($C_{w\gamma}$)	1.00		
q_n=	**25 ksf**		
q_R=	**11.3 ksf**		

Calculated by: WAN
Date: 11/03/2022
Revised: 01/09/2023

Checked by: AJ
Date: 11/03/2022

Revision: 6
Status: Final

LRMC Pedestrian Bridge over
Manchester Street Bridge, Lawrence, MA
Lateral Earth Pressures PN: 274047

Objective: Determine the lateral earth pressure coefficients for the abutments and wingwalls.

References:
1) Das, B.M. (1990) Principles of Geotechnical Engineering, 2nd Edition, PWS-Kent Publising Company, Boston, MA, 665 pages.
2) AASHTO LRFD Bridge Design Specifications (2020, 9th Edition) (AASHTO LRFD-BDS)
3) Embankment design based on "Sketch Plans of Superstructure Replacement, Lawrence Lawrence Manchester Rail Trail Over Manchester Street," TEC, dated June 9, 2022

Assumptions:
1) Borings BB-1 and BB-2 are representative of the soils at the site.
2) Existing Fill is representative of soil behind abutments and wingwalls.
3) Fill surface is horizontal.
4) Moist soil conditions for existing fills above GWT are representative.
5) Granite blocks and concrete have similar soil-wall interface angles of friction.
6) GWT is located at or below the footing elevations and does not affect lateral earth pressure.
7) Soils normally consolidated (i.e., Over Consolidation Ratio [OCR] is 1).

Solution:

Soil Properties/Subsurface Information

Unit Wt of Proposed Structural Fill ($\gamma_{sf,m}$):	120	pcf	γ based on moist Proposed Structural Fill properties
Unit Wt of Proposed Structural Fill ($\gamma_{gs,sat}$):	125	pcf	γ based on saturated Proposed Structural Fill properties
Unit Weight of Existing Fill ($\gamma_{ef,m}$):	105	pcf	γ based on moist Existing Fill properties
Unit Weight of Existing Fill ($\gamma_{ef,sat}$):	120	pcf	γ based on saturated Existing Fill properties
Friction Angle of Proposed Structural Fill (ϕ_f):	32	degrees	ϕ_f based on Wt of Proposed Structural Fill properties
Friction Angle of Exisitng Fill (ϕ'_{ef}):	30	degrees	ϕ'_{ef} based on Existing Fill properties
Over Consolidation Ratio (OCR):	1		Assumed

At Rest Lateral Earth Pressure Coefficient, k_o

AASHTO LRFD Bridge Design Specifications (2020) Article 3.11.5.2

$k_o = (1 - \sin\phi)OCR^{\sin\phi}$ (3.11.5.2-2)

So,

Existing Fill $k_o =$ **0.50**

Glacial Soils $k_o =$ **0.47**

Active Lateral Earth Pressure Coefficient, k_a

AASHTO LRFD Bridge Design Specifications (2020) Article 3.11.5.3

$$k_a = \frac{\sin^2(\theta + \phi'_f)}{\Gamma[\sin^2\theta \sin(\theta - \delta)]} \quad (3.11.5.3\text{-}1)$$

and

$$\Gamma = \left[1 + \sqrt{\frac{\sin(\phi'_f + \delta)\sin(\phi'_f - \beta)}{\sin(\theta - \delta)\sin(\theta + \beta)}}\right]^2 \quad (3.11.5.3\text{-}2)$$

Where,

δ = Friction angle between wall and fill = 17.0 degrees
Based on Table C3.11.5.3-1 Formed Concrete against silty Sand
β = Angle of fill to horizontal = 0.0 degrees
θ = Angle of back of wall to horizontal = 90.0 degrees

So,

	Existing Fill	Glacial Soils
Γ =	2.62	2.71
k_a =	**0.30**	**0.28**

Calculated by: WAN
Date: 12/15/2022
Revised: 12/14/2022

Checked by: AJ
Date: 12/14/2022

Revision: 6
Status: Final

Passive Lateral Earth Pressure Coefficient, k_p

AASHTO LRFD Bridge Design Specifications (2020) Article 3.11.5.4

$k_p = R*k'_p$ (3.11.5.4-2)

Where,

k'_p and R are from Figure 3.11.5.4-1, below

	Existing Fill	Glacial Soils	
k'_p =	6.40	7.40	
δ/ϕ'_{ef} =	0.57	0.53	
R =	0.789	0.723	(Interpolated)

So,

Existing Fill **k_p = 5.05**

Glacial Soils **k_p = 5.35**

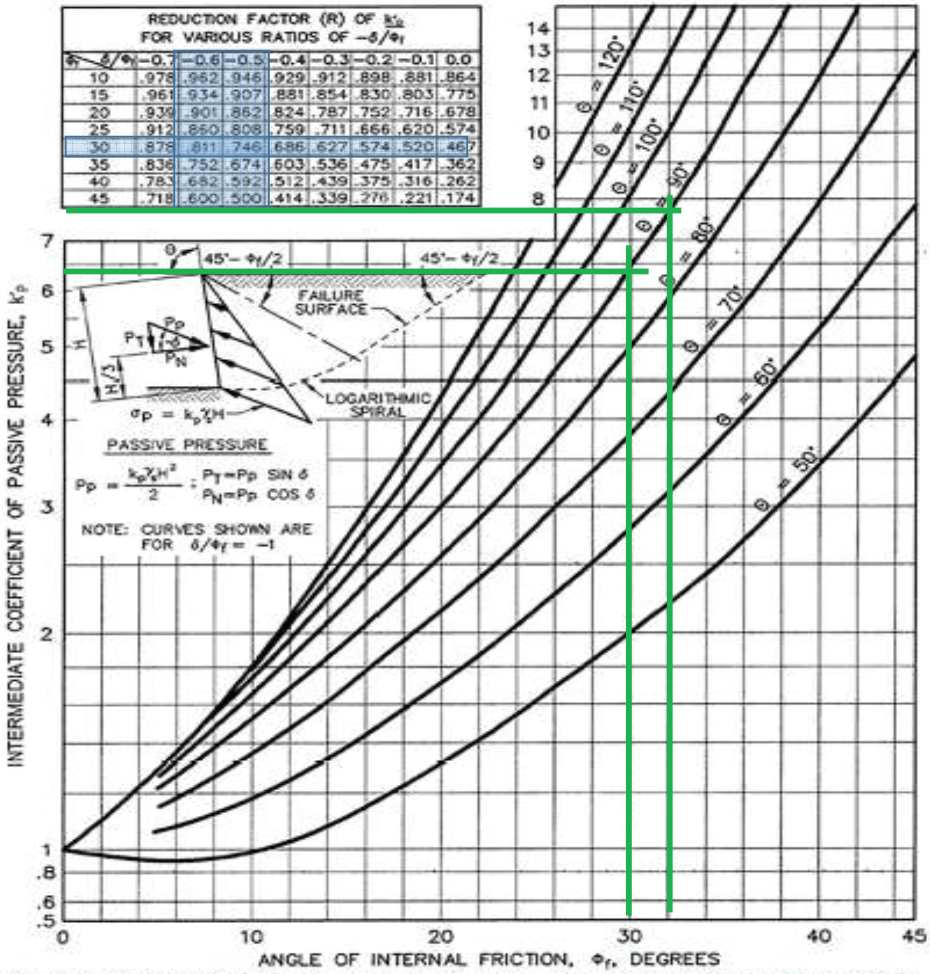

Figure 3.11.5.4-1—Computational Procedures for Passive Earth Pressures for Vertical and Sloping Walls with Horizontal Backfill (U.S. Department of the Navy, 1982a)

Calculated by: WAN
Date: 12/15/2022
Revised: 12/14/2022

Checked by: AJ
Date: 12/14/2022

Revision: 6
Status: Final

LRMC Pedestrian Bridge over
Manchester Street Bridge, Lawrence, MA
Organic Silt Consolidation PN: 274047

Consolidation of Organic Silt Layer Under Load from Raising the Embankment Grade

Objective: Evaluate the amounts of primary and secondary settlement that may occur under the load imposed by raising the embankment grade.

References:
1) Das, B.M. (1990) Principles of Geotechnical Engineering, 2nd Edition, PWS-Kent Publising Company, Boston, MA, 665 pages.
2) Boring BB-2 performed by TRC July 10, 2017.
3) Embankment design based on "Sketch Plans of Superstructure Replacement, Lawrence, MA Lawrence Manchester Rail Trail Over Manchester Street," TEC, dated June 9, 2022

Assumptions:
1) Boring is representative of the soils at the site.
2) Top of Existing Embankment is approximately El 73.74 feet (TEC, 2022)
3) High point of Proposed Embankment at El 77.74 feet (TEC, 2022)
4) Maximum depth of proposed structural fill is four (4) feet.
5) Moist conditions for existing and proposed fills above GWT.
6) Organic Silt Layer drains from top and bottom (BB-2 boring log).
7) Organic Silt is normally consolidated.

Solution:

Soil Properties/Subsurface Information

Unit Weight of Existing Fill ($\gamma_{ef,m}$):	105	pcf	γ based on moist Existing Fill properties
Unit Weight of Existing Fill ($\gamma_{ef,sat}$):	120	pcf	γ based on saturated Existing Fill properties
Unit Wt of Structural Fill ($\gamma_{F,m}$):	120	pcf	γ based on moist Structural Fill properties.
Unit Wt of Structural Fill ($\gamma_{F,sat}$):	125	pcf	γ based on saturated Structural Fill properties.
Unit Wt of Organic Silt ($\gamma_{os,m}$):	97	pcf	γ based on moist Organic Silt properties.
Unit Wt of Organic Silt ($\gamma_{os,sat}$):	105	pcf	γ based on saturated Organic Silt properties.
Unit Weight of Water (γ_w):	62.4	pcf	
Groundwater Elevation:	56.7	ft, NAVD-88	Based on Boring Log
Initial voids ratio of Organic Silt ($e_{os,0}$)	1.6		Assumed based on literature review
Moisture Content of Organic Silt ($w_{n,}$os)	56.7	%	Laboratory Test Results

Soil Description: Based on boring BB-2 , black, very soft to stiff Organic Silt is approximately 6.8 feet.

Calculated by: WAN
Date: 12/15/2022

Checked by: AJ
Date: 12/15/2022

Revision: 6
Status: Final

Primary Consolidation

Settlement from Primary Consolidation, S_c = $\frac{C_c * H}{(1+e_{os,0})} * \log([\sigma'_0 + \Delta\sigma'] / \sigma'_0)$

Where,

C_c = 0.0115 * $w_{n,os}$ = Consolidation Index (Das, 1990, Table 7.1 for organic soils, below)

0.65205

Table 7.1 Correlations for Compression Index, C_c [a]

Equation	Reference	Region of applicability
$C_c = 0.007(LL - 7)$	Skempton	Remolded clays
$C_c = 0.01 w_N$		Chicago clays
$C_c = 1.15(e_O - 0.27)$	Nishida	All clays
$C_c = 0.30(e_O - 0.27)$	Hough	Inorganic cohesive soil: silt, silty clay, clay
$C_c = 0.0115 w_N$		Organic soils, peats, organic silt, and clay
$C_c = 0.0046(LL - 9)$		Brazilian clays
$C_c = 0.75(e_O - 0.5)$		Soils with low plasticity
$C_c = 0.208 e_O + 0.0083$		Chicago clays
$C_c = 0.156 e_O + 0.0107$		All clays

[a] After Rendon-Herrero (1980)
Note: e_O = *in situ* void ratio; w_N = *in situ* water content

σ'_0 = Initial overburden pressure, psf

2,001 psf

$\Delta\sigma'$ = Change in overburden pressure, psf

480 psf

So,

S_c = 0.16 ft

1.91 inches

Secondary Consolidation

Settlement from Secondary Consolidation, S_s = $C'_\alpha * H * \log(t_2/t_1)$

C'_α = Secondary compression index

0.51% Based on Das, 1990, Figure 7.24 for "organic silt, etc."

H = L ayer Thickness = 6.8 Feet

T_{90} = 0.848 = $(c_v * t)/(H_{dr})^2$ so t = $(0.848/c_v)*(H_{dr})^2$

c_v = 0.3 ft^2/day (Navfac DM 7.1-144, Figure 4)

H_{dr} = Half Thickness Organic Silt (two-way drainage) = 3.4 feet

$t = t_1$ = 32.7 days 0.09 years

t_2 = 30 years assumed

So,

S_s = 0.09 ft

1.05 inches

Total Settlement from Consolidation

= $S_c + S_s$

Total Settlement = 3.0 inches

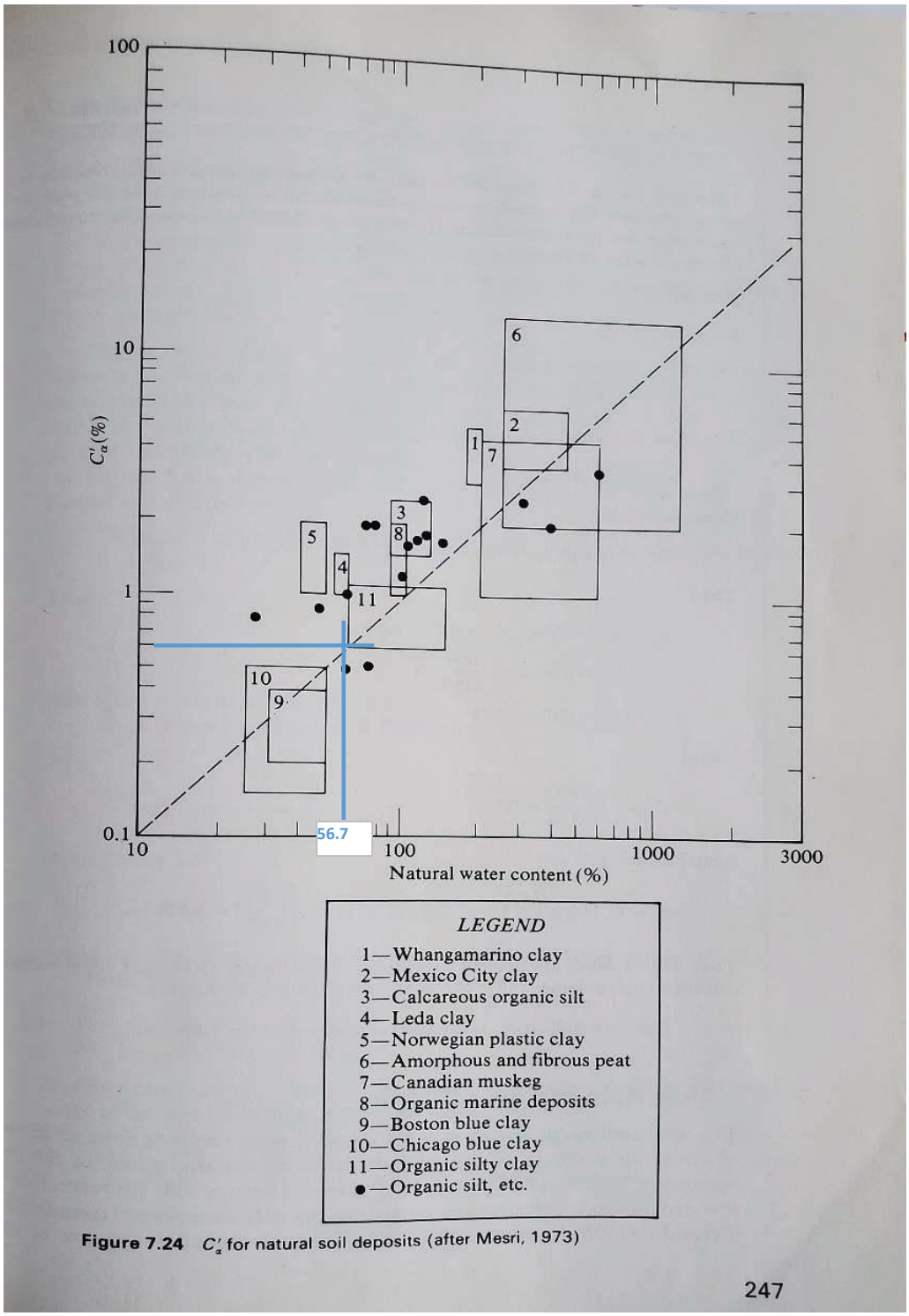

Figure 7.24 C'_α for natural soil deposits (after Mesri, 1973)

247

LRMC Pedestrian Bridge over
Manchester Street Bridge, Lawrence, MA
Organic Silt Consolidation PN: 274047

Consolidation of Organic Silt Layer Under Load from Raising the Embankment Grade with Geofoam

Objective: Evaluate the amounts of primary and secondary settlement that may occur under the load imposed by raising the embankment grade with geofoam.

References:

1) Das, B.M. (1990) Principles of Geotechnical Engineering, 2nd Edition, PWS-Kent Publising Company, Boston, MA, 665 pages.
2) Boring BB-2 performed by TRC July 10, 2017.
3) Embankment design based on "Sketch Plans of Superstructure Replacement, Lawrence, MA Lawrence Manchester Rail Trail Over Manchester Street," TEC, dated June 9, 2022
4) Federal Highway Administration (FHWA). 2017. *Ground Modification Methods - Volume I* , NHI Course No. 132034 Publication No. FHWA-NHI-16-027, FHWA GEC 013, National Highway Institute (NHI)

Assumptions:

1) Boring is representative of the soils at the site.
2) Top of Existing Embankment is approximately El 73.74 feet (TEC, 2022)
3) High point of Proposed Embankment at El 77.74 feet (TEC, 2022)
4) Maximum depth of proposed structural fill is four (4) feet.
5) Moist conditions for existing and proposed fills above GWT.
6) Geofoam (Expanded Polystyrene [EPS]) will be used to raise grade by 3 feet of the total 4-foot increase. 1 foot of height increase allows for sand leveling course and trail surface courses.
7) Organic Silt Layer drains from top and bottom (BB-2 boring log).
8) Organic Silt is normally consolidated.

Solution:

Soil Properties/Subsurface Information

Unit Weight of Existing Fill ($\gamma_{ef,m}$):	105	pcf	γ based on moist Existing Fill properties
Unit Weight of Existing Fill ($\gamma_{ef,sat}$):	120	pcf	γ based on saturated Existing Fill properties
Unit Wt of Structural Fill ($\gamma_{F,m}$):	120	pcf	γ based on moist Structural Fill properties.
Unit Wt of Structural Fill ($\gamma_{F,sat}$):	125	pcf	γ based on saturated Structural Fill properties.
Unit Wt of Geofoam ($\gamma_{g,m}$):	2.0	pcf	γ based on dry Geofoam properties (FHWA, 2017).
Unit Wt of Geofoam ($\gamma_{g,sat}$):	3.2	pcf	γ based on moist Geofoam properties (FHWA, 2017).
Unit Wt of Organic Silt ($\gamma_{gf,d}$):	97	pcf	γ based on moist Organic Silt properties.
Unit Wt of Organic Silt ($\gamma_{gf,m}$):	105	pcf	γ based on saturated Organic Silt properties.
Unit Weight of Water (γ_w):	62.4	pcf	
Groundwater Elevation:	56.7	ft, NAVD-88	Based on Boring Log
Initial voids ratio of Organic Silt ($e_{os,0}$)	1.6		Assumed based on literature review
Moisture Content of Organic Silt ($w_{n,}$os)	56.7	%	Laboratory Test Results

Soil Description: Based on boring BB-2 , black, very soft to stiff Organic Silt is approximately 6.8 feet.

1.0 feet, total, Structural Fill
3.0 feet Geofoam
18.2 feet
17.04 Fill above GWT
1.16 Fill below GWT
6.8 feet

Calculated by: WAN
Date: 12/15/2022

Checked by: AJ
Date: 12/15/2022

Revision: 6
Status: Final

Primary Consolidation

Settlement from Primary Consolidation, S_c = $\frac{C_c * H}{(1+e_{os,0})} * \log([\sigma'_0 + \Delta\sigma'] / \sigma'_0)$

Where,

C_c = 0.0115 * $w_{n,os}$ = Consolidation Index (Das, 1990, Table 7.1 for organic soils)

0.65205

Table 7.1 Correlations for Compression Index, C_c [a]

Equation	Reference	Region of applicability
$C_c = 0.007(LL - 7)$	Skempton	Remolded clays
$C_c = 0.01w_N$		Chicago clays
$C_c = 1.15(e_O - 0.27)$	Nishida	All clays
$C_c = 0.30(e_O - 0.27)$	Hough	Inorganic cohesive soil: silt, silty clay, clay
$C_c = 0.0115w_N$		Organic soils, peats, organic silt, and clay
$C_c = 0.0046(LL - 9)$		Brazilian clays
$C_c = 0.75(e_O - 0.5)$		Soils with low plasticity
$C_c = 0.208e_O + 0.0083$		Chicago clays
$C_c = 0.156e_O + 0.0107$		All clays

[a] After Rendon-Herrero (1980)
Note: e_O = *in situ* void ratio; w_N = *in situ* water content

σ'_0 = Initial overburden pressure, psf

2,001 psf

$\Delta\sigma'$ = Change in overburden pressure, psf

129.6 psf

So,

S_c = 0.05 ft

0.56 inches

Secondary Consolidation

Settlement from Secondary Consolidation, S_s = $C'_\alpha * H * \log(t_2/t_1)$

C'_α = = Secondary compression index

0.51% Based on Das, 1990, Figure 7.24 for "organic silt, etc." below

H = L ayer Thickness = 6.8 Feet

T_{90} = 0.848 = $(c_v * t)/(H_{dr})^2$ so t = $(0.848/c_v)*(H_{dr})^2$

c_v = 0.3 ft^2/day (Navfac DM 7.1-144, Figure 4)

H_{dr} = Half Thickness Organic Silt (two-way drainage) = 3.4 feet

$t = t_1$ = 32.7 days 0.09 years

t_2 = 30 years assumed

So,

S_s = 0.09 ft

1.05 inches

Total Settlement from Consolidation

= $S_c + S_s$

Total Settlement = 1.6 inches

Calculated by: WAN
Date: 12/15/2022

Checked by: AJ
Date: 12/15/2022

Revision: 6
Status: Final

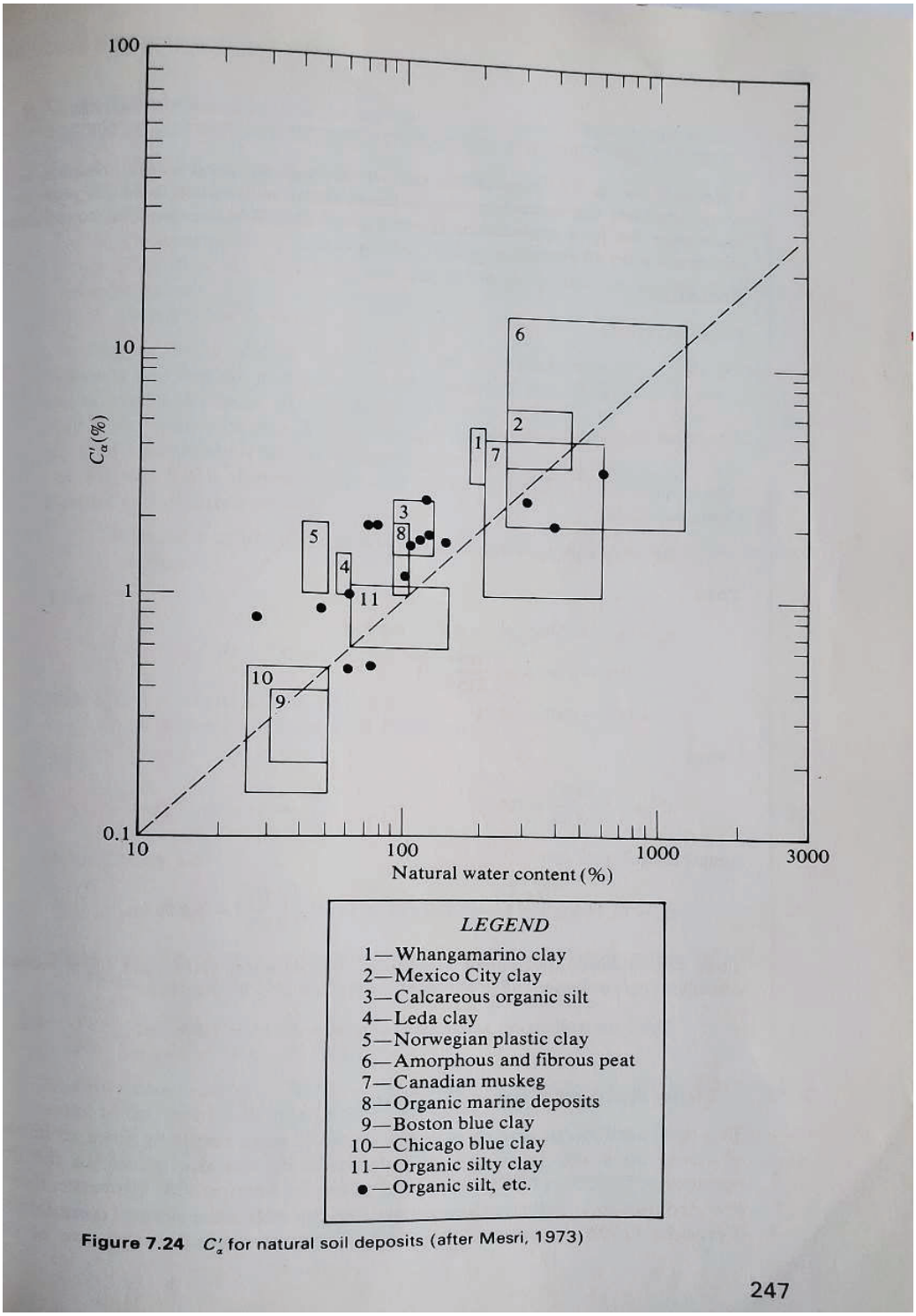

Figure 7.24 C'_α for natural soil deposits (after Mesri, 1973)

247

USGS AASHTO-2009 Ground Motions Analysis

Output from USGS Ground Motion Tool for the Lowell Street Bridge to determine seismic deign parameters


```
  "request": {
    "date": "2022-12-16T13:36:07.414Z",
    "referenceDocument": "AASHTO-2009",
    "status": "success",
    "url": "https://earthquake.usgs.gov/ws/designmaps/aashto-2009.json?
latitude=42.712&longitude=-71.18&siteClass=E&title=Manchester St Abutments",
   "parameters": {
     "latitude": 42.712,
     "longitude": -71.18,
     "siteClass": "E",
     "title": "Manchester St Abutments"
   }
 },
 "response": {
   "data": {
     "pga": 0.089,
     "fpga": 2.5,
     "as": 0.222,
     "ss": 0.174,
     "fa": 2.5,
     "sds": 0.435,
     "s1": 0.042,
     "fv": 3.5,
     "sd1": 0.148,
     "sdc": "A",
     "ts": 0.34,
     "t0": 0.068,
     "twoPeriodDesignSpectrum": [
       [
         0,
         0.222
       ],
       [
         0.025,
         0.3
       ],
       [
         0.05,
         0.379
       ],
       [
         0.068,
         0.435
       ],
       [
         0.1,
         0.435
       ],
       [
         0.15,
         0.435
       ],
       [
         0.2,
         0.435
       ],
       [
         0.25,
         0.435
       ],
       [
         0.3,
         0.435
```

```
],
[
  0.34,
  0.435
],
[
  0.35,
  0.423
],
[
  0.4,
  0.37
],
[
  0.45,
  0.329
],
[
  0.5,
  0.296
],
[
  0.55,
  0.269
],
[
  0.6,
  0.247
],
[
  0.65,
  0.228
],
[
  0.7,
  0.212
],
[
  0.75,
  0.197
],
[
  0.8,
  0.185
],
[
  0.85,
  0.174
],
[
  0.9,
  0.165
],
[
  0.95,
  0.156
],
[
  1,
  0.148
],
[
  1.05,
  0.141
],
```

```
[
  1.1,
  0.135
],
[
  1.15,
  0.129
],
[
  1.2,
  0.123
],
[
  1.25,
  0.118
],
[
  1.3,
  0.114
],
[
  1.35,
  0.11
],
[
  1.4,
  0.106
],
[
  1.45,
  0.102
],
[
  1.5,
  0.099
],
[
  1.55,
  0.096
],
[
  1.6,
  0.093
],
[
  1.65,
  0.09
],
[
  1.7,
  0.087
],
[
  1.75,
  0.085
],
[
  1.8,
  0.082
],
[
  1.85,
  0.08
],
[
```

```
  1.9,
  0.078
],
[
  1.95,
  0.076
],
[
  2,
  0.074
],
[
  2.05,
  0.072
],
[
  2.1,
  0.071
],
[
  2.15,
  0.069
],
[
  2.2,
  0.067
],
[
  2.25,
  0.066
],
[
  2.3,
  0.064
],
[
  2.35,
  0.063
],
[
  2.4,
  0.062
],
[
  2.45,
  0.06
],
[
  2.5,
  0.059
],
[
  2.55,
  0.058
],
[
  2.6,
  0.057
],
[
  2.65,
  0.056
],
[
  2.7,
```

```
  0.055
],
[
  2.75,
  0.054
],
[
  2.8,
  0.053
],
[
  2.85,
  0.052
],
[
  2.9,
  0.051
],
[
  2.95,
  0.05
],
[
  3,
  0.049
],
[
  3.05,
  0.049
],
[
  3.1,
  0.048
],
[
  3.15,
  0.047
],
[
  3.2,
  0.046
],
[
  3.25,
  0.046
],
[
  3.3,
  0.045
],
[
  3.35,
  0.044
],
[
  3.4,
  0.044
],
[
  3.45,
  0.043
],
[
  3.5,
  0.042
```

```
        ],
        [
          3.55,
          0.042
        ],
        [
          3.6,
          0.041
        ],
        [
          3.65,
          0.041
        ],
        [
          3.7,
          0.04
        ],
        [
          3.75,
          0.039
        ],
        [
          3.8,
          0.039
        ],
        [
          3.85,
          0.038
        ],
        [
          3.9,
          0.038
        ],
        [
          3.95,
          0.037
        ],
        [
          4,
          0.037
        ]
      ]
    },
    "metadata": {
      "griddedValuesID": "2002-US-AASHTO-05-050-R1.rnd",
      "spatialInterpolationMethod": "linearlinearlinear"
    }
  }
}
```

AASHTO-2009 Web Service Documentation

This software is preliminary or provisional and is subject to revision. It is being provided to meet the need for timely best science. The software has not received final approval by the U.S. Geological Survey (USGS). No warranty, expressed or implied, is made by the USGS or the U.S. Government as to the functionality of the software and related material nor shall the fact of release constitute any such warranty. The software is provided on the condition that neither the USGS nor the U.S. Government shall be held liable for any damages resulting from the authorized or unauthorized use of the software.

Request Parameters (Input)

All parameters are required

latitude

Latitude of location of interest, in decimal degrees
Example: `34.05`

longitude

Longitude for location of interest, in decimal degrees
Example: `-118.25`

siteClass

Site Class, as defined in Table 3.4.2.1-1 of seismic design reference document
Options:
`A` for “Hard rock”
`B` for “Rock”
`C` for “Very dense soil and soft rock”
`D` for “Stiff soil”
`E` (See Table 3.4.2.1-1)

title

Title for location/request
Example: `Example`

Response Parameters (Output)

Includes information about request, followed by response

request

date

Timestamp, in format YYYY-MM-DDThh:mm:ssZ

referenceDocument

Seismic design reference document: “AASHTO-2009”

status

Either “success” or “error”

url

URL of request/response; see example below

parameters

latitude

See definitions of request parameters above

longitude

See definitions of request parameters above

siteClass

See definitions of request parameters above

title

See definitions of request parameters above

response

data

pga

PGA, the mapped horizontal Peak Ground Acceleration, in units of g

fpga

F_{PGA}, the site coefficient for PGA, from Table 3.4.2.3-1 of the seismic design reference document

as

$A_s = F_{PGA} \times PGA$ (Equation 3.4.1-1), the design peak ground acceleration, in units of g

ss

S_S, the mapped short-period (0.2-second) spectral acceleration, in units of g

fa

F_a, the site coefficient for S_S, from Table 3.4.2.3-1

sds

$S_{DS} = F_a \times S_S$ (Equation 3.4.1-2), the design short-period (0.2-second) spectral acceleration, in units of g

s1

S_1, the mapped 1-second spectral acceleration, in units of g

fv

F_v, the site coefficient for S_1, from Table 3.4.2.3-2

sd1

$S_{D1} = F_v \times S_1$ (Equation 3.4.1-3), the design 1-second spectral acceleration, in units of g

sdc

SDC, the Seismic Design Category from Table 3.5-1

ts

$T_S = S_{D1} / S_{DS}$ (Equation 3.4.1-6), in seconds, for construction of design response spectrum

t0

$T_0 = 0.2T_S$ (Equation 3.4.1-5), in seconds, for construction of design response spectrum

twoPeriodDesignSpectrum

Two-period design response spectrum

metadata

griddedValuesID

Identifier for underlying gridded values:
“1998-HI-AASHTO-05-050-R1.rnd” for Hawaii
“2002-US-AASHTO-05-050-R1.rnd” for the conterminous United States
“2003-PRVI-AASHTO-05-050-R1.rnd” for Puerto Rico & the U.S. Virgin Islands
“2006-AK-AASHTO-05-050-R1.rnd” for Alaska

spatialInterpolationMethod

Identifier for spatial interpolation method used to obtain values for location of interest from underlying gridded values: "linearlinearlinear" for bilinear

Example

Request

https://earthquake.usgs.gov/ws/designmaps /aashto-2009.json?latitude=34&longitude=-118&siteClass=C&title=Example

Response


```
{
  request:{
     date:"2019-06-13T15:46:45.448Z",
     referenceDocument:"AASHTO-2009",
     status:"success",
     url:"http://localhost:8000/ws/designmaps/aashto-2009.json
     parameters:{
        latitude:34,
        longitude:-118,
        siteClass:"C",
        title:"Example"
     }
  },
  response:{
     data:{
        pga:0.637,
        fpga:1,
        as:0.637,
        ss:1.512,
        fa:1,
        sds:1.512,
        s1:0.551,
        fv:1.3,
        sd1:0.716,
        sdc:"D",
        ts:0.474,
        t0:0.095,
        twoPeriodDesignSpectrum:[
           [
              0,
              0.637
           ],
           [
              0.025,
              0.868
           ],
```

```
[
   0.05,
   1.099
],
[
   0.095,
   1.512
],
[
   0.1,
   1.512
],
[
   0.15,
   1.512
],
[
   0.2,
   1.512
],
[
   0.25,
   1.512
],
[
   0.3,
   1.512
],
[
   0.35,
   1.512
],
[
   0.4,
   1.512
],
[
   0.45,
```

```
      1.512
    ],
    [
      0.474,
      1.512
    ],
    [
      0.5,
      1.433
    ],
    [
      0.55,
      1.302
    ],
    [
      0.6,
      1.194
    ],
    [
      0.65,
      1.102
    ],
    [
      0.7,
      1.023
    ],
    [
      0.75,
      0.955
    ],
    [
      0.8,
      0.895
    ],
    [
      0.85,
      0.843
    ],
```

```
[
   0.9,
   0.796
],
[
   0.95,
   0.754
],
[
   1,
   0.716
],
[
   1.05,
   0.682
],
[
   1.1,
   0.651
],
[
   1.15,
   0.623
],
[
   1.2,
   0.597
],
[
   1.25,
   0.573
],
[
   1.3,
   0.551
],
[
   1.35,
```

```
      0.531
    ],
    [
      1.4,
      0.512
    ],
    [
      1.45,
      0.494
    ],
    [
      1.5,
      0.478
    ],
    [
      1.55,
      0.462
    ],
    [
      1.6,
      0.448
    ],
    [
      1.65,
      0.434
    ],
    [
      1.7,
      0.421
    ],
    [
      1.75,
      0.409
    ],
    [
      1.8,
      0.398
    ],
```

```
[
   1.85,
   0.387
],
[
   1.9,
   0.377
],
[
   1.95,
   0.367
],
[
   2,
   0.358
],
[
   2.05,
   0.349
],
[
   2.1,
   0.341
],
[
   2.15,
   0.333
],
[
   2.2,
   0.326
],
[
   2.25,
   0.318
],
[
   2.3,
```

```
      0.311
    ],
    [
      2.35,
      0.305
    ],
    [
      2.4,
      0.298
    ],
    [
      2.45,
      0.292
    ],
    [
      2.5,
      0.287
    ],
    [
      2.55,
      0.281
    ],
    [
      2.6,
      0.276
    ],
    [
      2.65,
      0.27
    ],
    [
      2.7,
      0.265
    ],
    [
      2.75,
      0.26
    ],
```

```
[
   2.8,
   0.256
],
[
   2.85,
   0.251
],
[
   2.9,
   0.247
],
[
   2.95,
   0.243
],
[
   3,
   0.239
],
[
   3.05,
   0.235
],
[
   3.1,
   0.231
],
[
   3.15,
   0.227
],
[
   3.2,
   0.224
],
[
   3.25,
```

```
      0.22
    ],
    [
      3.3,
      0.217
    ],
    [
      3.35,
      0.214
    ],
    [
      3.4,
      0.211
    ],
    [
      3.45,
      0.208
    ],
    [
      3.5,
      0.205
    ],
    [
      3.55,
      0.202
    ],
    [
      3.6,
      0.199
    ],
    [
      3.65,
      0.196
    ],
    [
      3.7,
      0.194
    ],
```

```
                [
                   3.75,
                   0.191
                ],
                [
                   3.8,
                   0.189
                ],
                [
                   3.85,
                   0.186
                ],
                [
                   3.9,
                   0.184
                ],
                [
                   3.95,
                   0.181
                ],
                [
                   4,
                   0.179
                ]
             ]
          },
          metadata:{
             griddedValuesID:"2002-US-AASHTO-05-050-R1.rnd",
             spatialInterpolationMethod:"linearlinearlinear"
          }
       }
    }
```

MILLER ENGINEERING & TESTING INC.

GEOTECHNICAL / SOIL BORINGS / ENVIRONMENTAL / SOILS / CONCRETE / MASONRY / STEEL / ROOFING / ASPHLAT INSPECTION

.Mail all correspondence to: 100 SHEFFIELD ROAD · P.O. BOX 4776 · MANCHESTER, N.H. 03108-4776 · TELEPHONE (603) 668-6016

Via email: SGregorio@theengineeringcorp.com

October 18, 2023

Samuel W. Gregorio, PE, PTOE, RSP
THE ENGINEERING CORPORATION, INC.
282 Merrimack Street
Lawrence, Massachusetts 01843

RE: Geotechnical Engineering Report
Proposed Intersection Improvements
Canal Street/Broadway Improvement Project
Lawrence, Massachusetts Project 23.096.NH

Dear Mr. Gregorio:

Miller Engineering & Testing, Inc. is pleased to submit this Geotechnical Engineering Report for the Proposed Intersection Improvements at the intersection of Canal Street and Broadway (Massachusetts Highway 28) in Lawrence, Massachusetts. This letter is the report of our findings. Kindly note that this report is subject to the limitations in Attachment A.

SITE AND PROPOSED CONSTRUCTION

The Proposed Intersection Improvements will consist of new Mast Arms to support overhead signals at the intersection of Broadway and Canal Street. Three test borings were advanced around the intersection to provide information on the subsurface conditions at the new mast arm locations. Figure 1 of this report depicts the approximate locations of the test borings.

The intersection is currently controlled by overhead, arm-mounted traffic signals at each corner. The intersection improvements will consist of new overhead, arm-mounted traffic signals at the northwest, northeast, and southeast corners. The new signal systems will resemble the existing systems:

Northwest Corner	20-foot mast arm with 3 signal heads
Northeast Corner	30-foot mast arm with 3 signal heads
Southeast Corner	20-foot mast arm with 2 signal heads

SUBSURFACE EXPLORATION PROGRAM

The subsurface conditions at the Site were characterized by advancing test borings through the overburden soil formations within the area of the proposed mast arm locations (Figure 1). The subsurface exploration program was performed to:

- Characterize the nature and consistency of the soil formations in the borings and provide samples for visual classification and laboratory analysis;
- Perform Standard Penetration Tests to estimate the relative density of the in-place soil units; and
- Determine the depths to competent soil and/or bedrock, and the depth of the groundwater table.

The test borings (designated B-1, B-2, and B-3) were advanced on September 26, 2023 with a truck-mounted Diedrich model D-50 hydraulic rotary drill rig using a 2¼-inch inside-diameter hollow-stem auger to bore the holes. Soil samples were generally collected at 5-foot intervals from the ground surface to the bottoms of the borings. Soil samples were collected using 2-inch outside-diameter split-spoon samplers during Standard Penetration Tests, which were performed with a 140-pound safety hammer dropping 30 inches, in general accordance with ASTM Standard D1586. Soil samples from the test borings were placed in containers and returned to our office for further evaluation and laboratory analysis. The test boring logs are included as Attachment B.

SUBSURFACE CONDITIONS

Results from the test borings indicate that the subsurface conditions at the intersection of Broadway and Canal Street consist of fill materials and buried organic topsoils overlying fine sand and silt soils. Figure 1 illustrates the Site layout and approximate test boring locations.

Subsurface Soils

The general characteristics of the subsurface layers are described below in order of increasing depth below the ground surface; refer to the boring logs in Attachment B for more detailed descriptions at specific locations and depths.

Surficial Layers:

The test borings penetrated surficial layers of concrete (6 inches at B-1), asphalt pavement (9 inches at B-2), and fill materials (over 4 feet in B-3). The asphalt and concrete pavements were directly underlain by Fill Materials.

Fill Materials

Below the asphalt and concrete pavements, all the borings penetrated a layer of brown silty fine-to-coarse sand with trace amounts of gravel that we infer to be fill materials, likely associated with the historical development of the area and/or backfills for underground utilities. The Fill Materials were generally 13 to 14 feet thick (Attachment B). Laboratory testing (Attachment C) indicates that these soils are chiefly fine to medium sand with trace amounts of gravel and fines (silt and clay fractions combined). Standard penetration testing indicated that the fill materials exhibited a highly variable relative density: chiefly loose (with $N < 6$ blows per foot), but varying to medium dense (the 11-to-13 foot sample in B-1) and dense (the 9-to-11 foot sample in B-2).

Buried Organic Topsoils

Borings B-1 and B-3 penetrated a layer of organic topsoils buried below the fill materials (Attachment B) at depths below the existing grades of 14 to 15.5 feet in B-1 and 13 to 17 feet in B-3 (Attachment B). Sampling in B-2 did not encounter this stratum; however, we were not able to recover samples from this depth interval (Attachment B), and we infer that the low standard penetration test in the 14-to-16-foot

sample in B-2 likely is also buried organic topsoils. Standard penetration testing indicates that the buried organic soils are in a soft and compressible condition.

Fine Sand and Silt
Below the Fill Materials, the test borings encountered a naturally occurring layer of fine sand and silt (Unified Soil Classification: SM) that was at least 9 feet thick (Attachment B). Our test borings did not penetrate the full thickness of this stratum. Laboratory testing indicates that these soils are chiefly fine sands with 30% fines. Standard penetration testing indicated that the sand and silt soils were in a very loose to loose relative density condition (with N < 6 blows per foot).

Drilling Refusal/Presumed Bedrock Surface
Drilling refusal, the depth below which the hollow-stem auger was not able to penetrate the deeper geologic formations, was not encountered in the test borings to depths of 26 feet below the existing grades.

Groundwater
Groundwater was encountered in the test borings at a depth of 14 feet below the existing grades in B-1 and B-2, within the buried organic soils (Attachment B). In boring B-3, groundwater was encountered at a depth of 9 feet below the existing grades, within the lower zones of the fill materials.

Note that groundwater levels at the Site will fluctuate due to season, temperature, precipitation, nearby underground utilities, and construction activity in the area. Groundwater levels at other times may be different from those observed and recorded during this exploration program.

ENGINEERING EVALUATION

It is our understanding that the new mast arms will be supported by drilled piers constructed of reinforced concrete as detailed in MassDOT's Overhead Signal Structure & Foundation Standard Drawings (dated December 2015).

The soils encountered in these borings exhibited varying soil properties and relative densities. The soil profile at the proposed mast arm locations generally consisted of loose to medium dense, dry sand and gravel fill materials to the groundwater table 9 feet below grade in B-3 and 14 feet below grade in B-1 and B-2 (Attachment B). Borings B-1 and B-3 penetrated a layer of soft buried organic topsoils (organic fine sand and silt material); boring B-2 penetrated what we think could be a possible layer of soft buried organic topsoils at the same depths. The top of the naturally occurring, loose, wet, fine sand and silt formation was encountered below the buried organic topsoils at depths of approximately 15 to 17 feet below grade, and this soil stratum continued to at least the bottoms of the test borings at 26 feet below grade.

In accordance with MassDOT Overhead Signal Structure & Foundation Standard Drawings (Sheet 5 dated December, 2015), the design of the traffic signal mast arms should be based on the subsurface conditions at each mast arm location:

- B-1 (northeast corner) - low standard penetration testing (N < 6 blows per foot) and a closer vertical proximity to buried topsoil layers (at depths of 14 to 15.5 feet below) grade warrant a special foundation design for the mast arm being proposed at this corner.

- B-2 (southeast corner) - loose, dry sand condition (Attachment B, B-2).
- B-3 (northwest corner, (Attachment B, B-3) – low standard penetration testing (N < 6 blows per foot) and a closer vertical proximity to buried topsoil layers (at depths of 13 to 17 feet below) grade warrant a special foundation design for the mast arm being proposed at this corner.

The final diameters and depths of embedment of the mast arm foundations should be determined in accordance with MassHighway Standard Drawings.

Note that all three test borings penetrated fill materials that were chiefly in a very loose to loose relative density condition between the existing grades to depths of approximately 13 to 14 feet (Attachment B). In addition to the loose granular fill materials, B-1 and B-3 penetrated a layer of soft buried topsoil between depths of 13 and 16 feet below grade, and B-2 penetrated what is probably a continuation of these soft buried topsoils at the same depths. Because of the subsurface conditions, it is our opinion that the design of all three mast arm foundations should be finalized with an evaluation of the site-specific subsurface profile and project-specific load and moment reactions for each foundation location (by using "LPILE" or other comparable software).

CONSTRUCTION

It is essential that the soil surrounding the drilled piers not be disturbed during construction. Concrete should be cast directly against undisturbed soil to ensure positive contact and to reduce the post-construction deflection. The contractor should install the foundations in accordance with MassDOT Standard Specifications Item 945 – Drilled Shafts.

FINAL DESIGN AND CONSTRUCTION MONITORING

A qualified geotechnical engineer should be retained to provide engineering services during the excavation and construction phases of this project. This will become particularly important relative to the excavation of unsuitable materials, and the placement and compaction of engineered fills and concrete. This will also allow for design changes in the event that subsurface conditions differ from those anticipated prior to the start of construction. The adequacy of fill compaction should be determined by field density testing as the fill is placed and compacted.

Representative samples of all backfill materials should be submitted to Miller Engineering & Testing, Inc. for testing to establish their optimum water contents and maximum dry densities, and to compare their gradation characteristics with the project specifications. In this manner, compaction criteria can be developed which will provide the materials with adequate strength and minimal distortion.

Lastly, we recommend that we be retained to assist in preparation of the project earthwork specifications and to review final design plans, specifications, and design submittals. In the event that any changes in the nature, design, or locations of the proposed project are planned, the conclusions and recommendations in this report will not be considered valid unless the changes are reviewed and conclusions of the report modified or verified in writing by Miller Engineering & Testing, Inc.

CLOSING

We appreciate the opportunity to provide these geotechnical engineering services to TEC and the City of Lawrence. If you have questions regarding this report, or need additional information, please contact us at kmilender@millerengandtesting.com or at (603) 668-6016.

Very truly yours,
MILLER ENGINEERING & TESTING, INC.

Kenneth W. Milender, P.E.
Senior Geotechnical Engineer

for

Frank K. Miller, P.E.
Executive Vice President

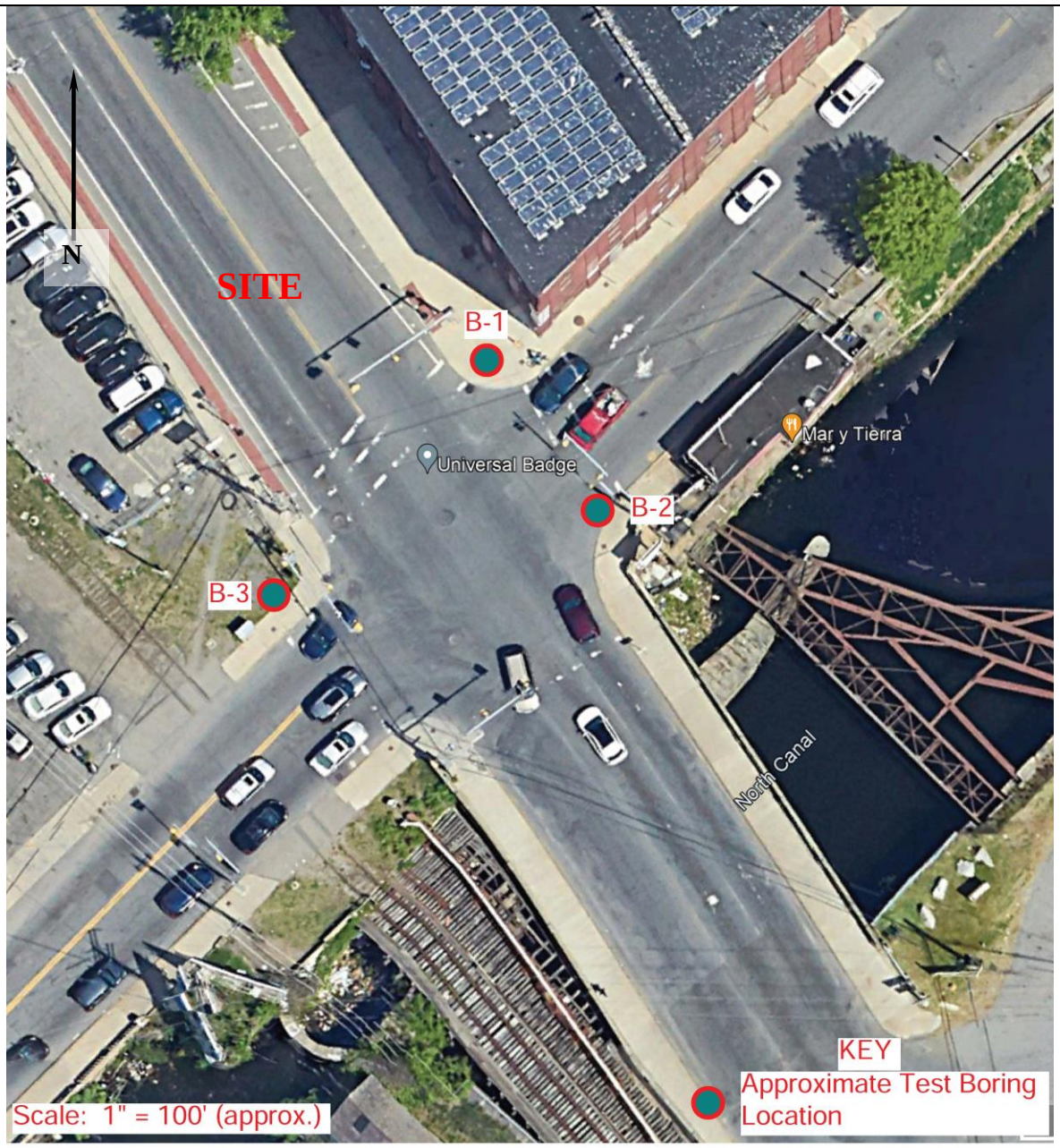

Source: Google Earth® image dated 05/11/2023.

GEOTECHNICAL ENGINEERING REPORT	TEST BORING LOCATION SKETCH
Broadway/Canal Street Intersection Improvements Lawrence, MA October 2023 Miller Project No. 23.096.NH	FIGURE 1

ATTACHMENTS

GEOTECHNICAL ENGINEERING REPORT
Proposed Intersection Improvements
Broadway/Canal Street
Lawrence, Massachusetts

Attachment A – Limitations
Attachment B – Test Boring Logs
Attachment C – Laboratory Gradation Report

ATTACHMENT A

Limitations

GEOTECHNICAL ENGINEERING REPORT
Proposed Intersection Improvements
Broadway/Canal Street
Lawrence, Massachusetts

LIMITATIONS

Explorations

1. The analyses, recommendations and designs submitted in this report are based in part upon the data obtained from subsurface explorations. The nature and extent of variations between these explorations may not become evident until construction. If variations then appear evident, it will be necessary to re-evaluate the recommendations of this report.

2. The generalized soil profile described in the text is intended to convey trends in subsurface conditions. The boundaries between strata are approximate and idealized, and have been developed by interpretation of widely spaced explorations and samples; actual soil transitions are probably more gradual. For specific information, refer to the boring logs.

3. Water level readings have been made in the drill holes at times and under conditions stated on the boring logs. These data have been reviewed and interpretations have been made in the text of this report. However, it must be noted that fluctuations in the level of the groundwater may occur due to variations in rainfall, temperature, and other factors differing from the time measurements were made.

Review

4. It is recommended that this firm be retained to review final design plans and specifications. In the event that any changes in the nature, design, or location of the structures are planned, the conclusions and recommendations contained in this report shall not be considered valid unless the changes are reviewed and conclusions of the report modified or verified in writing by Miller Engineering & Testing, Inc.

Construction

5. It is recommended that this firm be retained to provide soils engineering services during the excavations and foundation construction phases of the work. This is to observe compliance with the design concepts, specifications, or recommendations and to allow design changes in the event that subsurface conditions differ from those anticipated prior to the start of construction.

Use of Report

6. This report has been prepared for the exclusive use of **The Engineering Corporation, Inc.** for the proposed **Intersection Improvements** at the **Intersection of Broadway (Massachusetts State Route 28) and Canal Street** in **Lawrence, Massachusetts** in accordance with generally accepted soil and foundation engineering practices. No other warranty, expressed or implied, is made.

7. This soil and foundation engineering report has been prepared for this project by Miller Engineering & Testing, Inc. This report was completed for design purposes and may be limited in its scope to prepare an accurate bid. Contractors wishing a copy of the report may secure it with the understanding that its scope is limited to design considerations only.

ATTACHMENT B

Test Boring Logs

GEOTECHNICAL ENGINEERING REPORT
Proposed Intersection Improvements
Broadway/Canal Street
Lawrence, Massachusetts

TEST BORING LOG

MILLER ENGINEERING & TESTING, INC.
100 Sheffield Road - Manchester, NH 03103
Ph. (603) 668-6016 - Fax: (603) 668-8641

Project: Broadway & Canal
Lawrence, MA
Project No: 23.096.NH
Date Start: 09-26-23
Date End: 09-26-23

Sheet 1 **of** 1
Boring No: B-1
Location: See Plan
Approx. Surface Elev:

	CASING	SAMPLER	GROUNDWATER OBSERVATIONS Date	Depth	Casing At	Stabilization Period
Type	HSA	SS	09-26-23	14'	26'	Upon Completion
Size	2-1/4" ID	1-3/8" ID				
Hammer		Safety - 140 lbs.				
Fall		30"				

Depth/ Elev.	Cas bl/ft	SAMPLE Sample No.	Depth Range	Pen.	Rec.	BLOWS 0-6"	6-12"	12-18"	18-24"	Strata Change	Sample Description	Notes
0		-	0.0-0.5	6							-: 6" Concrete	
		S-1	0.5-2.0	18	7		4	2	2		S-1: Brown, fine to medium sand, some gravel, little silt (FILL)	
		S-2	2.0-4.0	24	15	4	3	2	2		S-2: Brown, fine sand, little silt, trace gravel (FILL)	
		S-3	4.0-6.0	24	13	3	2	2	1		S-3: Brown, fine sand, little silt, trace gravel (FILL)	
5		S-4	6.0-8.0	24	12	2	2	2	4		S-4: Brown, fine sand, trace silt (FILL)	
		S-5	9.0-11.0	24	12	4	7	5	7		S-5: Olive, fine to medium sand, some silt, little gravel (FILL)	
10												
		S-6	14.0-15.5	18	17	3	1	1			S-6: Black, organic silt, little fine sand, wet	
15												
		S-6A	15.5-16.0	6	2				1		S-6A: Brown, fine sand, some silt, wet	
		S-7	19.0-21.0	24	19	2	2	3	5		S-7: Gray, silt, some fine sand, wet	
20												
		S-8	24.0-26.0	24	15	1/12"		3	5		S-8: Gray, silt, some fine sand, trace organic fiber, wet	
25												
											BORING TERMINATED AT 26 ft	
30												

Driller: R. Marcoux
Helper: J. Donahue
Inspector: T. Young

COHESIVE CONSISTENCY (Blows/Foot)
0-2 VERY SOFT
2-4 SOFT
4-8 MEDIUM STIFF
8-15 STIFF
15-30 HARD

COHESIONLESS (Blows/Foot)
0-4 VERY LOOSE
4-10 LOOSE
10-30 MEDIUM DENSE
30-50 DENSE
50+ VERY DENSE

PROPORTIONS USED
TRACE: 0-10%
LITTLE: 10-20%
SOME: 20-35%
AND: 35-50%

NOTES:

REMARKS: THE STRATIFICATION LINES REPRESENT THE APPROXIMATE BOUNDARY BETWEEN SOIL TYPES. TRANSITION MAY BE GRADUAL.
WATER LEVEL READINGS HAVE BEEN MADE IN THE DRILL HOLES AT TIMES AND UNDER CONDITIONS STATED ON THE BORING LOGS.
FLUCTUATIONS IN THE LEVEL OF THE GROUNDWATER MAY OCCUR DUE TO OTHER FACTORS THAN THOSE PRESENT AT THE TIME MEASUREMENTS WERE MADE.

TEST BORING LOG

MILLER ENGINEERING & TESTING, INC.
100 Sheffield Road - Manchester, NH 03103
Ph. (603) 668-6016 - Fax: (603) 668-8641

Project: Broadway & Canal
Lawrence, MA
Project No: 23.096.NH
Date Start: 09-26-23
Date End: 09-26-23

Sheet 1 **of** 1
Boring No: B-2
Location: See Plan
Approx. Surface Elev:

	CASING	SAMPLER	GROUNDWATER OBSERVATIONS Date	Depth	Casing At	Stabilization Period
Type	HSA	SS	09-26-23	14'	26'	Upon Completion
Size	2-1/4" ID	1-3/8" ID				
Hammer		Safety - 140 lbs.				
Fall		30"				

Depth/ Elev.	Cas bl/ft	SAMPLE Sample No.	Depth Range	Pen.	Rec.	BLOWS 0-6"	6-12"	12-18"	18-24"	Strata Change	Sample Description	Notes
0		-	0.0-0.8	9							-: 9" Asphalt	
		S-1	1.0-2.0	12	8			11	11		S-1: Dark brown/black, fine to coarse sand, some silt, little gravel (FILL)	
		S-2	2.0-4.0	24	14	14	9	4	4		S-2: Brown, fine sand, little silt, trace silt (FILL)	
		S-3	4.0-6.0	24	8	2	2	4	4		S-3: Brown, fine sand, some silt, trace gravel (FILL)	
5												
		S-4	9.0-11.0	24	12	10	16	23	26		S-4: Brown, fine to medium sand, some gravel and silt (FILL)	
10												
		S-5	14.0-16.0	24	0	1	2	2	1		S-5: No recovery (Possible Buried Topsoil)	
15												
		S-6	16.0-16.5	6	5	6					S-6: Gray, silt, clay, some gravel, wet	
		S-6A	16.5-18.0	18	10		12	8	3		S-6A: Brown, fine sand, little silt, wet	
		S-7	19.0-21.0	24	3	3	3	3	4		S-7: Brown, fine sand, little silt, wet	
20												
		S-8	24.0-26.0	24	19	2	2	3	4		S-8: Brown, fine sand, little silt, wet	
25												
											BORING TERMINATED AT 26 ft	
30												

Driller: R. Marcoux
Helper: J. Donahue
Inspector: T. Young

COHESIVE CONSISTENCY (Blows/Foot)
0-2 VERY SOFT
2-4 SOFT
4-8 MEDIUM STIFF
8-15 STIFF
15-30 HARD

COHESIONLESS (Blows/Foot)
0-4 VERY LOOSE
4-10 LOOSE
10-30 MEDIUM DENSE
30-50 DENSE
50+ VERY DENSE

PROPORTIONS USED
TRACE: 0-10%
LITTLE: 10-20%
SOME: 20-35%
AND: 35-50%

NOTES:

REMARKS: THE STRATIFICATION LINES REPRESENT THE APPROXIMATE BOUNDARY BETWEEN SOIL TYPES. TRANSITION MAY BE GRADUAL.
WATER LEVEL READINGS HAVE BEEN MADE IN THE DRILL HOLES AT TIMES AND UNDER CONDITIONS STATED ON THE BORING LOGS.
FLUCTUATIONS IN THE LEVEL OF THE GROUNDWATER MAY OCCUR DUE TO OTHER FACTORS THAN THOSE PRESENT AT THE TIME MEASUREMENTS WERE MADE.

TEST BORING LOG

MILLER ENGINEERING & TESTING, INC.
100 Sheffield Road - Manchester, NH 03103
Ph. (603) 668-6016 - Fax: (603) 668-8641

Project: Broadway & Canal
Lawrence, MA
Project No: 23.096.NH
Date Start: 09-26-23
Date End: 09-26-23

Sheet 1 **of** 1
Boring No: B-3
Location: See Plan
Approx. Surface Elev:

	CASING	SAMPLER	GROUNDWATER OBSERVATIONS Date	Depth	Casing At	Stabilization Period
Type	HSA	SS	09-26-23	9'	26'	Upon Completion
Size	2-1/4" ID	1-3/8" ID				
Hammer		Safety - 140 lbs.				
Fall		30"				

Depth/ Elev.	Cas bl/ft	SAMPLE Sample No.	Depth Range	Pen.	Rec.	BLOWS 0-6"	6-12"	12-18"	18-24"	Strata Change	Sample Description	Notes
0		S-1	0.0-2.0	24	8	4	9	15	8		S-1: Dark brown, fine to coarse sand, some gravel, little silt, trace fine roots (FILL)	
		S-2	2.0-4.0	24	7	6	5	4	3		S-2: Dark brown to brown, fine to coarse sand, some gravel, little silt (FILL)	
5		S-3	4.0-6.0	24	12	2	3	3	12		S-3: Brown, fine to medium sand, little gravel, little silt (FILL)	
10		S-4	9.0-11.0	24	12	6	2	1/12"			S-4: Brown, fine to medium sand, some silt, trace gravel, wet (FILL)	
		S-5	11.0-13.0	24	15	1	2	2	3		S-5: Brown, fine to medium sand, some silt and gravel, wet (dark brown, organic silt, little organic fibers in tip of split-spoon) (FILL)	
15		S-6	14.0-16.0	24	12	4	5	4	4		S-6: Black, organic silt, some fine sand, wet	
		S-7	17.0-19.0	24	14	2	1	2	3		S-7: Gray, fine sand, little silt, wet	
20		S-8	19.0-21.0	24	17	2	3	3	4		S-8: Gray, fine sand, little silt, trace organic fibers, wet	
25		S-9	24.0-26.0	24	19	1	2	1	1		S-9: Gray/Brown, fine sand, little silt, trace organic fibers, wet	
30											BORING TERMINATED AT 26 ft	

Driller: R. Marcoux
Helper: J. Donahue
Inspector: T. Young

COHESIVE CONSISTENCY (Blows/Foot)
0-2 VERY SOFT
2-4 SOFT
4-8 MEDIUM STIFF
8-15 STIFF
15-30 HARD

COHESIONLESS (Blows/Foot)
0-4 VERY LOOSE
4-10 LOOSE
10-30 MEDIUM DENSE
30-50 DENSE
50+ VERY DENSE

PROPORTIONS USED
TRACE: 0-10%
LITTLE: 10-20%
SOME: 20-35%
AND: 35-50%

NOTES:

REMARKS: THE STRATIFICATION LINES REPRESENT THE APPROXIMATE BOUNDARY BETWEEN SOIL TYPES. TRANSITION MAY BE GRADUAL.
WATER LEVEL READINGS HAVE BEEN MADE IN THE DRILL HOLES AT TIMES AND UNDER CONDITIONS STATED ON THE BORING LOGS.
FLUCTUATIONS IN THE LEVEL OF THE GROUNDWATER MAY OCCUR DUE TO OTHER FACTORS THAN THOSE PRESENT AT THE TIME MEASUREMENTS WERE MADE.

ATTACHMENT C

Laboratory Gradation Report

GEOTECHNICAL ENGINEERING REPORT
Proposed Intersection Improvements
Broadway/Canal Street
Lawrence, Massachusetts

GRAINSIZE DISTRIBUTION REPORT - AGGREGATE GRADING

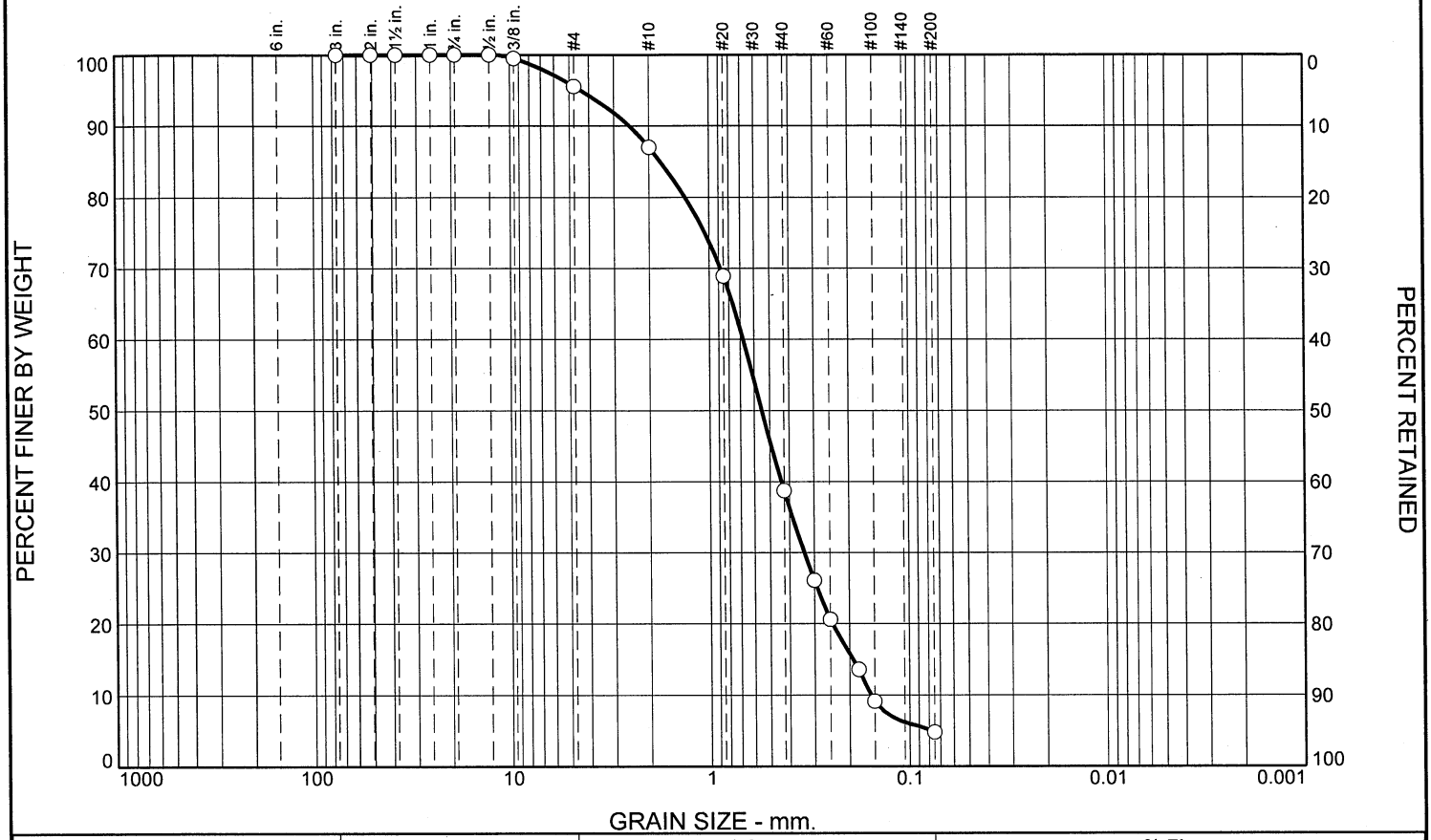

% +3"	% Gravel		% Sand			% Fines	
	Coarse	Fine	Coarse	Medium	Fine	Silt	Clay
0	0	4	9	48	34	5	

SIEVE SIZE OR DIAMETER	PERCENT FINER	SPEC.* PERCENT	PASS? (X=NO)
3"	100		
2"	100		
1.5"	100		
1"	100		
3/4"	100		
1/2"	100		
3/8	99		
#4	96		
#10	87		
#20	69		
#40	39		
#50	26		
#60	21		
#80	14		
#100	9		
#200	4.8		

* (no specification provided)

Soil Description

Brown, fine sand, little silt, trace gravel (FILL)

Atterberg Limits

PL= LL= PI=

Coefficients

D_{90}= 2.4957 D_{85}= 1.7571 D_{60}= 0.6781
D_{50}= 0.5473 D_{30}= 0.3363 D_{15}= 0.1923
D_{10}= 0.1569 C_u= 4.32 C_c= 1.06

Classification

USCS= SP AASHTO=

Remarks

BORING JAR SAMPLE.

Source of Sample: B-1 **Depth:** 2
Sample Number: S-2

Date: 10-12-23

MILLER ENGINEERING & TESTING, INC.

Client: TEC
Project: Broadway & Canal
Project No: 23.096.NH **Figure** L23343A

Tested By: DM NL

GRAINSIZE DISTRIBUTION REPORT - AGGREGATE GRADING

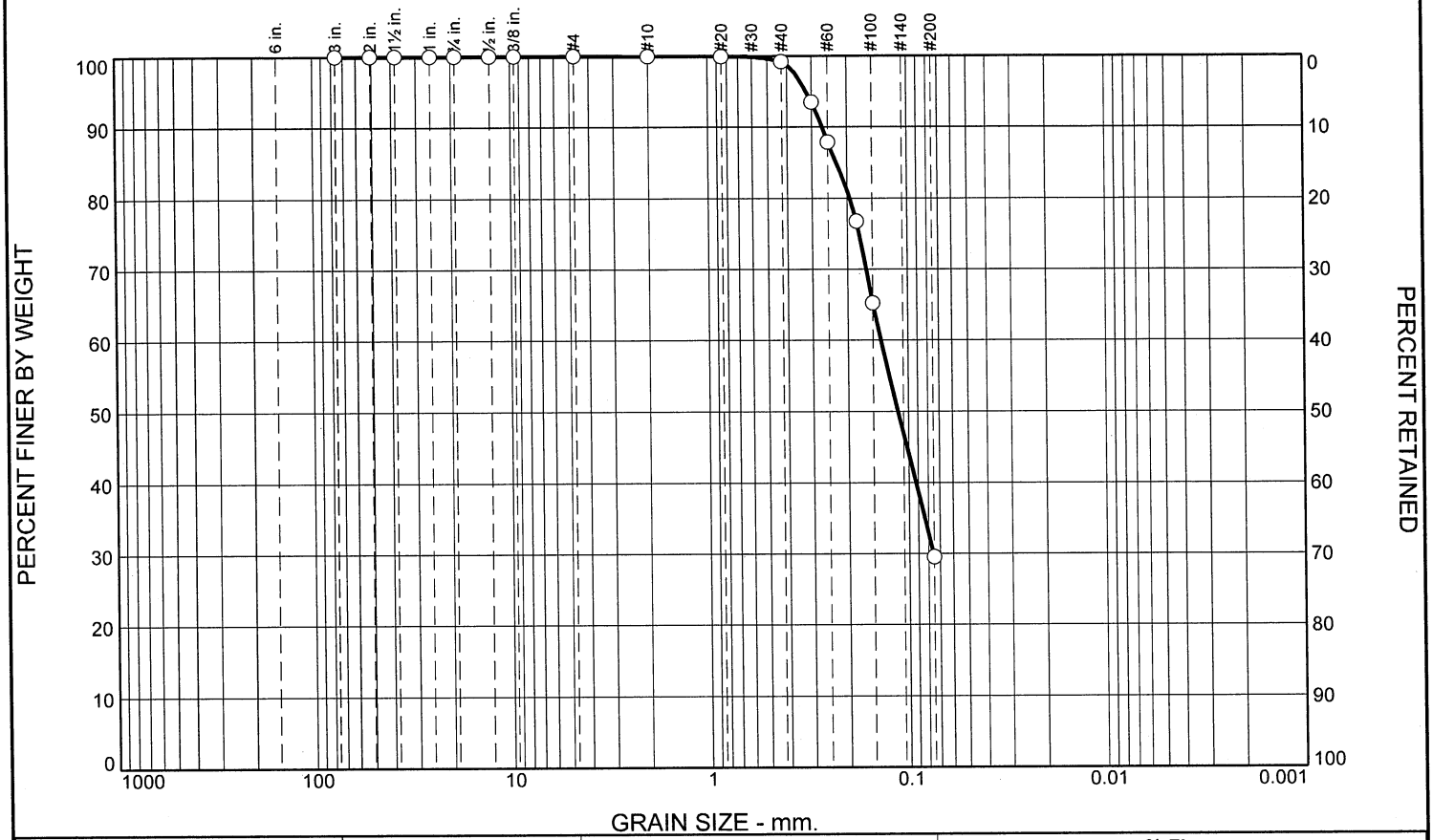

% +3"	% Gravel		% Sand			% Fines	
	Coarse	Fine	Coarse	Medium	Fine	Silt	Clay
0	0	0	0	1	69	30	

SIEVE SIZE OR DIAMETER	PERCENT FINER	SPEC.* PERCENT	PASS? (X=NO)
3"	100		
2"	100		
1.5"	100		
1"	100		
3/4"	100		
1/2"	100		
3/8	100		
#4	100		
#10	100		
#20	100		
#40	99		
#50	93		
#60	88		
#80	77		
#100	65		
#200	30		

* (no specification provided)

Soil Description

Brown, fine sand, little silt, wet

Atterberg Limits

PL= LL= PI=

Coefficients

D_{90}= 0.2667 D_{85}= 0.2273 D_{60}= 0.1366
D_{50}= 0.1129 D_{30}= 0.0757 D_{15}=
D_{10}= C_u= C_c=

Classification

USCS= AASHTO=

Remarks

BORING JAR SAMPLE.

Source of Sample: B-2 **Depth:** 24
Sample Number: S-8

Date: 10-12-23

MILLER ENGINEERING & TESTING, INC.

Client: TEC
Project: Broadway & Canal
Project No: 23.096.NH **Figure** L23343B

Tested By: DM NL

GRAINSIZE DISTRIBUTION REPORT - AGGREGATE GRADING

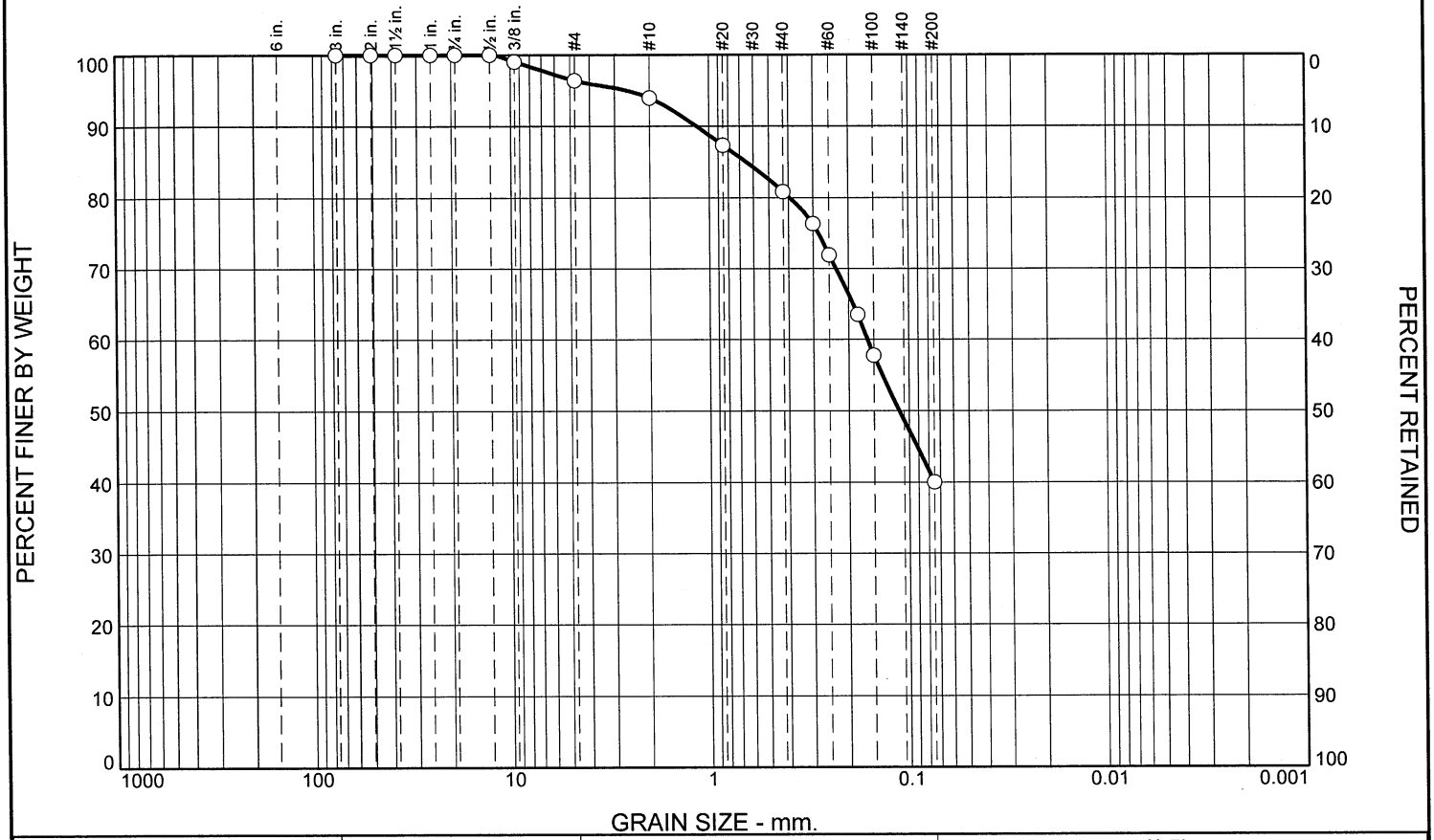

% +3"	% Gravel		% Sand			% Fines	
	Coarse	Fine	Coarse	Medium	Fine	Silt	Clay
0	0	4	2	13	41	40	

SIEVE SIZE OR DIAMETER	PERCENT FINER	SPEC.* PERCENT	PASS? (X=NO)
3"	100		
2"	100		
1.5"	100		
1"	100		
3/4"	100		
1/2"	100		
3/8	99		
#4	96		
#10	94		
#20	87		
#40	81		
#50	76		
#60	72		
#80	64		
#100	58		
#200	40		

* (no specification provided)

Soil Description

Brown, fine to medium sand, some silt, trace gravel, wet

Atterberg Limits

PL= LL= PI=

Coefficients

D_{90}= 1.1569 D_{85}= 0.6500 D_{60}= 0.1610
D_{50}= 0.1120 D_{30}= D_{15}=
D_{10}= C_u= C_c=

Classification

USCS= AASHTO=

Remarks

BORING JAR SAMPLE.

Source of Sample: B-3 **Depth:** 9
Sample Number: S-4

Date: 10-12-23

MILLER ENGINEERING & TESTING, INC.

Client: TEC
Project: Broadway & Canal
Project No: 23.096.NH **Figure** L23343C

Tested By: DM NL

THIS PAGE IS INTENTIONALLY LEFT BLANK

146 Dascomb Road
Andover, MA 01810
978.794.1792
TheEngineeringCorp.com
Create | Design | Innovate

Job: Merrimack River Bridge L-04-045 (C91) **Job Number:** T0694

Location: Lawrence, MA **Date:** 2/15/2021

Title: Substructure Re-use Justification **Sheet:** 0 **Of** 0

Calculated By: AJC **Checked By:** RGN

COMMONWEALTH OF MASSACHUSETTS
ROBERT NICCOLI
CIVIL
No. 49871
PROFESSIONAL ENGINEER

The following letter will serve to discuss all assumptions and rationale used to justify the existing substructure is adequate to support the proposed loading conditions. This letter is being prepared in response to comments by MassDOT made on the previous Preliminary Structures Report (PSR) prepared by TEC, dated June 30, 2017. This letter will supplement language contained within the revised PSR and highlight results from calculations contained herein.

The existing bridge was assumed to be originally designed to support the Cooper E-series loading standards. This assumption was made based on the time frame that the bridge was constructed and what the standard Cooper E-series loading of the American Railway Engineering Association (AREA, now AREMA) was at that time. The time of construction of the bridge was determined based on information provided within the Historic Structure Inventory Report (See Appendix D). Based on this time of construction, the standard Cooper E-series loading was between a E-40 & E-50. The E-40 loading is lighter and was used herein to determine the original design loads of the bridge. Assuming this lighter loading is a conservative assumption since it will result in a smaller overall delta between the original design loading and those of the proposed rehabilitated structure.

Based on the assumption that the existing structure was designed for, and once support Cooper E-40 loading, substructure reactions were determined, including both these live loads and the superstructure dead load. It was calculated that this reaction would be 538.8 kips (see Appendix A). TEC also calculated the substructures' reactions for the proposed rehabilitated structures loads, which include the additional concrete deck, potential concrete pavers and the anticipated live load from either a small maintenance vehicle (H10) or pedestrian live load. It was calculated that this reaction would be 399.3 kips (see Appendix A). Therefore, the proposed rehabilitated structure's substructure will see a reaction load that is 139.5 kips, or 26% less load than when it carried railroad traffic.

The existing substructure has been inspected on multiple occasions by multiple parties to determine the substructure's current condition. In a Preliminary Bridge Evaluation report (dated August 2016, prepared by Hardesty & Hanover) it was stated that the general condition of the substructure is very good based on a visual inspection, and that the abutments and piers likely rest on bedrock (See Appendix B). An additional visual inspection was performed by TEC in March 2017, during which the substructure appeared to be in good condition with only minor deficiencies including debris build-up and minor cracking/missing of mortar. An underwater inspection report was prepared by MassDOT dated 8/6/2020 (see Appendix C). This report did not note any deficiencies for corrective action other than clearing vegetation. From the inspection report, TEC assumes that wholesale armoring of the or structure scour countermeasures are unnecessary as part of this project and that the existing substructure is supported on deep foundations to bedrock due to the high flows and potential for scour at this

location. An in-depth bridge inspection was performed in May 2020 by WSP, during which access was provided to the underside of the structure. During this inspection, it was observed that the abutments and piers were in Satisfactory and Fair condition respectively. Noted deficiencies include cracked and missing mortar, and vegetation growth, which is consistent with previous visual inspections. Additional deficiencies include isolated locations where the bearing pedestal stones have cracked or settled.

During all previous inspections, there have been no observations that the existing substructure exhibits any sign of distress. No major settlement, overturning or sliding has been observed in the existing substructure.

To summarize, the rehabilitated structure would support a significantly reduced loading condition and is in a satisfactory condition with no observed deficiencies that would effect it's load carrying capacity. The existing substructure has been in place for over a 100-years supporting rail traffic loading and currently shows no signs of distress. Based on the above assumptions and reasoning, TEC believes that the existing bridges substructure is adequate for re-use to support the proposed rehabilitated structure.

Appendix A

Substructure Reuse Calcs

CALCULATIONS

65 Glenn Street, Lawrence, MA 01843
tel 978.794.1792 | fax 978.794.1793 | www.theengineeringcorp.com

JOB: Merrimack River Bridge PSR
JOB NUMBER: T0694
LOCATION: Lawrence, MA
DATE: 6/13/17
TITLE: Substructure Loads Comparison
SHEET: 1 OF 17
CALCULATED BY: CMR
CHECKED BY: KRF

REF

Re-Use of Substructure - Load Analysis

- Compare Reactions from exist loading to proposed loading
- Ignore DL due to superstructure b/c assume no changes

Original Design Loads

- Cooper E-40 (LL)

NOTES:
- Conservatively assume no impact
- Conserv. assume E-40 based on date of construction

Proposed Design Loads

- H10 Vehicle / Pedestrian (LL)
- 8" concrete deck (DL)
- concrete pavers (DL) → potential (apply conservatively)

* • See Appendix for STAAD reactions

65 Glenn Street, Lawrence, MA 01843
tel 978.794.1792 | fax 978.794.1793 | www.theengineeringcorp.com

CALCULATIONS

JOB: Merrimack River Bridge PSR
JOB NUMBER: T0694
LOCATION: Lawrence, MA
DATE: 6/13/17
TITLE: Substructure Loads Comparison
SHEET: 2 OF 17
CALCULATED BY: CMR
CHECKED BY: KRF

REF

Substructure Load Analysis (cont'd)

Original Loads

- Cooper E-40 = 269.4^k (2 trains) — See STAAD
  = 538.8^k

Proposed Loads

Span = 88 ft.
Clear Width = 27.5 ft. (Distance between ℄ stringers 1 + 8)
Pedestrian Load = 90 psf

- Pedestrian LL = 90 psf (88 ft)(27.5 ft)/2 = 108.9
  ↳ controls!
- H10 Vehicle = 19.4^k (1.33) = 25.8^k — See STAAD
  ↳ impact! → conserv.
- 8" concrete Deck = 150 pcf (8"/12)(88 ft.)(27.5')/2 = 121.0^k
- Concrete Pavers = 140 psf (88 ft.)(27.5 ft)/2 = 169.4^k — See Superstructure Loads

$\sum$ Proposed = 399.3^k < Original ✓

Proposed Loads generate smaller reaction than existing! ✓

Sheet 3

```
STAAD PLANE
START JOB INFORMATION
JOB NAME Merrimack River Bridge PSR Railroad Substructure Reactions
JOB CLIENT City of Lawrence, MA
JOB NO T0694
ENGINEER NAME CMR
CHECKER NAME JPT
ENGINEER DATE 5/1/17
END JOB INFORMATION
INPUT WIDTH 79
UNIT FEET KIP
JOINT COORDINATES
1 0 0 0; 2 88 0 0;
MEMBER INCIDENCES
1 1 2;
DEFINE MATERIAL START
ISOTROPIC STEEL
E 4.176e+006
POISSON 0.3
DENSITY 0.489024
ALPHA 6e-006
DAMP 0.03
ISOTROPIC CONCRETE
E 453600
POISSON 0.17
DENSITY 0.14999
ALPHA 5.5e-006
DAMP 0.05
END DEFINE MATERIAL
UNIT INCHES KIP
SUPPORTS
1 2 PINNED
UNIT FEET KIP
MEMBER PROPERTY AMERICAN
1 PRIS AX 0.559 IZ 2.18 YD 4.854 ZD 1.25
UNIT INCHES KIP
CONSTANTS
MATERIAL STEEL ALL
UNIT FEET KIP
DEFINE MOVING LOAD
TYPE 1 LOAD 26 26 26 26 40 40 40 40 20 26 26 26 26 40 40 40 40 20
DIST 5 6 5 9 5 5 5 8 8 5 6 5 9 5 5 5 8
LOAD GENERATION 197
TYPE 1 -109 0 0 XINC 1
PERFORM ANALYSIS PRINT LOAD DATA
FINISH
```

You created this PDF from an application that is not licensed to print to novaPDF printer (http://www.novapdf.com)

TEC Software licensed to TEC Inc.	Job No T0694	Sheet No 14	Rev
	Part		
Job Title Merrimack River Bridge PSR Railroad Substructure Reactions	Ref		
	By CMR	Date 5/1/17	Chd JPT
Client City of Lawrence, MA	File RR Loading for Substructu	Date/Time 01-May-2017 14:10	

Job Information

	Engineer	Checked	Approved
Name:	CMR	JPT	
Date:	5/1/17		

Structure Type	PLANE FRAME

Number of Nodes	2	Highest Node	2
Number of Elements	1	Highest Beam	1

Number of Basic Load Cases	0
Number of Combination Load Cases	0

Included in this printout are data for:

All	The Whole Structure

Included in this printout are results for load cases:

Type	L/C	Name
Generation	1	LOAD GENERATION, LOAD #1, (1 of 197
Generation	2	LOAD GENERATION, LOAD #2, (2 of 197
Generation	3	LOAD GENERATION, LOAD #3, (3 of 197
Generation	4	LOAD GENERATION, LOAD #4, (4 of 197
Generation	5	LOAD GENERATION, LOAD #5, (5 of 197
Generation	6	LOAD GENERATION, LOAD #6, (6 of 197
Generation	7	LOAD GENERATION, LOAD #7, (7 of 197
Generation	8	LOAD GENERATION, LOAD #8, (8 of 197
Generation	9	LOAD GENERATION, LOAD #9, (9 of 197
Generation	10	LOAD GENERATION, LOAD #10, (10 of 1
Generation	11	LOAD GENERATION, LOAD #11, (11 of 1
Generation	12	LOAD GENERATION, LOAD #12, (12 of 1
Generation	13	LOAD GENERATION, LOAD #13, (13 of 1
Generation	14	LOAD GENERATION, LOAD #14, (14 of 1
Generation	15	LOAD GENERATION, LOAD #15, (15 of 1
Generation	16	LOAD GENERATION, LOAD #16, (16 of 1
Generation	17	LOAD GENERATION, LOAD #17, (17 of 1
Generation	18	LOAD GENERATION, LOAD #18, (18 of 1
Generation	19	LOAD GENERATION, LOAD #19, (19 of 1
Generation	20	LOAD GENERATION, LOAD #20, (20 of 1
Generation	21	LOAD GENERATION, LOAD #21, (21 of 1
Generation	22	LOAD GENERATION, LOAD #22, (22 of 1
Generation	23	LOAD GENERATION, LOAD #23, (23 of 1
Generation	24	LOAD GENERATION, LOAD #24, (24 of 1
Generation	25	LOAD GENERATION, LOAD #25, (25 of 1
Generation	26	LOAD GENERATION, LOAD #26, (26 of 1
Generation	27	LOAD GENERATION, LOAD #27, (27 of 1
Generation	28	LOAD GENERATION, LOAD #28, (28 of 1
Generation	29	LOAD GENERATION, LOAD #29, (29 of 1

You created this PDF from an application that is not licensed to print to novaPDF printer (http://www.novapdf.com)

TEC Software licensed to TEC Inc.	Job No T0694	Sheet No 25	Rev
	Part		
Job Title Merrimack River Bridge PSR Railroad Substructure Reactions	Ref		
	By CMR	Date 5/1/17	Chd JPT
Client City of Lawrence, MA	File RR Loading for Substructu	Date/Time 01-May-2017 14:10	

Job Information Cont...

Type	L/C	Name
Generation	30	LOAD GENERATION, LOAD #30, (30 of 1
Generation	31	LOAD GENERATION, LOAD #31, (31 of 1
Generation	32	LOAD GENERATION, LOAD #32, (32 of 1
Generation	33	LOAD GENERATION, LOAD #33, (33 of 1
Generation	34	LOAD GENERATION, LOAD #34, (34 of 1
Generation	35	LOAD GENERATION, LOAD #35, (35 of 1
Generation	36	LOAD GENERATION, LOAD #36, (36 of 1
Generation	37	LOAD GENERATION, LOAD #37, (37 of 1
Generation	38	LOAD GENERATION, LOAD #38, (38 of 1
Generation	39	LOAD GENERATION, LOAD #39, (39 of 1
Generation	40	LOAD GENERATION, LOAD #40, (40 of 1
Generation	41	LOAD GENERATION, LOAD #41, (41 of 1
Generation	42	LOAD GENERATION, LOAD #42, (42 of 1
Generation	43	LOAD GENERATION, LOAD #43, (43 of 1
Generation	44	LOAD GENERATION, LOAD #44, (44 of 1
Generation	45	LOAD GENERATION, LOAD #45, (45 of 1
Generation	46	LOAD GENERATION, LOAD #46, (46 of 1
Generation	47	LOAD GENERATION, LOAD #47, (47 of 1
Generation	48	LOAD GENERATION, LOAD #48, (48 of 1
Generation	49	LOAD GENERATION, LOAD #49, (49 of 1
Generation	50	LOAD GENERATION, LOAD #50, (50 of 1
Generation	51	LOAD GENERATION, LOAD #51, (51 of 1
Generation	52	LOAD GENERATION, LOAD #52, (52 of 1
Generation	53	LOAD GENERATION, LOAD #53, (53 of 1
Generation	54	LOAD GENERATION, LOAD #54, (54 of 1
Generation	55	LOAD GENERATION, LOAD #55, (55 of 1
Generation	56	LOAD GENERATION, LOAD #56, (56 of 1
Generation	57	LOAD GENERATION, LOAD #57, (57 of 1
Generation	58	LOAD GENERATION, LOAD #58, (58 of 1
Generation	59	LOAD GENERATION, LOAD #59, (59 of 1
Generation	60	LOAD GENERATION, LOAD #60, (60 of 1
Generation	61	LOAD GENERATION, LOAD #61, (61 of 1
Generation	62	LOAD GENERATION, LOAD #62, (62 of 1
Generation	63	LOAD GENERATION, LOAD #63, (63 of 1
Generation	64	LOAD GENERATION, LOAD #64, (64 of 1
Generation	65	LOAD GENERATION, LOAD #65, (65 of 1
Generation	66	LOAD GENERATION, LOAD #66, (66 of 1
Generation	67	LOAD GENERATION, LOAD #67, (67 of 1
Generation	68	LOAD GENERATION, LOAD #68, (68 of 1
Generation	69	LOAD GENERATION, LOAD #69, (69 of 1
Generation	70	LOAD GENERATION, LOAD #70, (70 of 1
Generation	71	LOAD GENERATION, LOAD #71, (71 of 1
Generation	72	LOAD GENERATION, LOAD #72, (72 of 1
Generation	73	LOAD GENERATION, LOAD #73, (73 of 1
Generation	74	LOAD GENERATION, LOAD #74, (74 of 1

You created this PDF from an application that is not licensed to print to novaPDF printer (http://www.novapdf.com)

TEC Software licensed to TEC Inc.	Job No T0694	Sheet No 36	Rev
	Part		
Job Title Merrimack River Bridge PSR Railroad Substructure Reactions	Ref		
	By CMR	Date 5/1/17	Chd JPT
Client City of Lawrence, MA	File RR Loading for Substructu	Date/Time 01-May-2017 14:10	

Job Information Cont...

Type	L/C	Name
Generation	75	LOAD GENERATION, LOAD #75, (75 of 1
Generation	76	LOAD GENERATION, LOAD #76, (76 of 1
Generation	77	LOAD GENERATION, LOAD #77, (77 of 1
Generation	78	LOAD GENERATION, LOAD #78, (78 of 1
Generation	79	LOAD GENERATION, LOAD #79, (79 of 1
Generation	80	LOAD GENERATION, LOAD #80, (80 of 1
Generation	81	LOAD GENERATION, LOAD #81, (81 of 1
Generation	82	LOAD GENERATION, LOAD #82, (82 of 1
Generation	83	LOAD GENERATION, LOAD #83, (83 of 1
Generation	84	LOAD GENERATION, LOAD #84, (84 of 1
Generation	85	LOAD GENERATION, LOAD #85, (85 of 1
Generation	86	LOAD GENERATION, LOAD #86, (86 of 1
Generation	87	LOAD GENERATION, LOAD #87, (87 of 1
Generation	88	LOAD GENERATION, LOAD #88, (88 of 1
Generation	89	LOAD GENERATION, LOAD #89, (89 of 1
Generation	90	LOAD GENERATION, LOAD #90, (90 of 1
Generation	91	LOAD GENERATION, LOAD #91, (91 of 1
Generation	92	LOAD GENERATION, LOAD #92, (92 of 1
Generation	93	LOAD GENERATION, LOAD #93, (93 of 1
Generation	94	LOAD GENERATION, LOAD #94, (94 of 1
Generation	95	LOAD GENERATION, LOAD #95, (95 of 1
Generation	96	LOAD GENERATION, LOAD #96, (96 of 1
Generation	97	LOAD GENERATION, LOAD #97, (97 of 1
Generation	98	LOAD GENERATION, LOAD #98, (98 of 1
Generation	99	LOAD GENERATION, LOAD #99, (99 of 1
Generation	100	LOAD GENERATION, LOAD #100, (100 c
Generation	101	LOAD GENERATION, LOAD #101, (101 c
Generation	102	LOAD GENERATION, LOAD #102, (102 c
Generation	103	LOAD GENERATION, LOAD #103, (103 c
Generation	104	LOAD GENERATION, LOAD #104, (104 c
Generation	105	LOAD GENERATION, LOAD #105, (105 c
Generation	106	LOAD GENERATION, LOAD #106, (106 c
Generation	107	LOAD GENERATION, LOAD #107, (107 c
Generation	108	LOAD GENERATION, LOAD #108, (108 c
Generation	109	LOAD GENERATION, LOAD #109, (109 c
Generation	110	LOAD GENERATION, LOAD #110, (110 c
Generation	111	LOAD GENERATION, LOAD #111, (111 c
Generation	112	LOAD GENERATION, LOAD #112, (112 c
Generation	113	LOAD GENERATION, LOAD #113, (113 c
Generation	114	LOAD GENERATION, LOAD #114, (114 c
Generation	115	LOAD GENERATION, LOAD #115, (115 c
Generation	116	LOAD GENERATION, LOAD #116, (116 c
Generation	117	LOAD GENERATION, LOAD #117, (117 c
Generation	118	LOAD GENERATION, LOAD #118, (118 c
Generation	119	LOAD GENERATION, LOAD #119, (119 c

You created this PDF from an application that is not licensed to print to novaPDF printer (http://www.novapdf.com)

TEC Software licensed to TEC Inc.	Job No T0694	Sheet No 47	Rev
	Part		
Job Title Merrimack River Bridge PSR Railroad Substructure Reactions	Ref		
	By CMR	Date 5/1/17	Chd JPT
Client City of Lawrence, MA	File RR Loading for Substructu	Date/Time 01-May-2017 14:10	

Job Information Cont...

Type	L/C	Name
Generation	119	LOAD GENERATION, LOAD #119, (119 c
Generation	120	LOAD GENERATION, LOAD #120, (120 c
Generation	121	LOAD GENERATION, LOAD #121, (121 c
Generation	122	LOAD GENERATION, LOAD #122, (122 c
Generation	123	LOAD GENERATION, LOAD #123, (123 c
Generation	124	LOAD GENERATION, LOAD #124, (124 c
Generation	125	LOAD GENERATION, LOAD #125, (125 c
Generation	126	LOAD GENERATION, LOAD #126, (126 c
Generation	127	LOAD GENERATION, LOAD #127, (127 c
Generation	128	LOAD GENERATION, LOAD #128, (128 c
Generation	129	LOAD GENERATION, LOAD #129, (129 c
Generation	130	LOAD GENERATION, LOAD #130, (130 c
Generation	131	LOAD GENERATION, LOAD #131, (131 c
Generation	132	LOAD GENERATION, LOAD #132, (132 c
Generation	133	LOAD GENERATION, LOAD #133, (133 c
Generation	134	LOAD GENERATION, LOAD #134, (134 c
Generation	135	LOAD GENERATION, LOAD #135, (135 c
Generation	136	LOAD GENERATION, LOAD #136, (136 c
Generation	137	LOAD GENERATION, LOAD #137, (137 c
Generation	138	LOAD GENERATION, LOAD #138, (138 c
Generation	139	LOAD GENERATION, LOAD #139, (139 c
Generation	140	LOAD GENERATION, LOAD #140, (140 c
Generation	141	LOAD GENERATION, LOAD #141, (141 c
Generation	142	LOAD GENERATION, LOAD #142, (142 c
Generation	143	LOAD GENERATION, LOAD #143, (143 c
Generation	144	LOAD GENERATION, LOAD #144, (144 c
Generation	145	LOAD GENERATION, LOAD #145, (145 c
Generation	146	LOAD GENERATION, LOAD #146, (146 c
Generation	147	LOAD GENERATION, LOAD #147, (147 c
Generation	148	LOAD GENERATION, LOAD #148, (148 c
Generation	149	LOAD GENERATION, LOAD #149, (149 c
Generation	150	LOAD GENERATION, LOAD #150, (150 c
Generation	151	LOAD GENERATION, LOAD #151, (151 c
Generation	152	LOAD GENERATION, LOAD #152, (152 c
Generation	153	LOAD GENERATION, LOAD #153, (153 c
Generation	154	LOAD GENERATION, LOAD #154, (154 c
Generation	155	LOAD GENERATION, LOAD #155, (155 c
Generation	156	LOAD GENERATION, LOAD #156, (156 c
Generation	157	LOAD GENERATION, LOAD #157, (157 c
Generation	158	LOAD GENERATION, LOAD #158, (158 c
Generation	159	LOAD GENERATION, LOAD #159, (159 c
Generation	160	LOAD GENERATION, LOAD #160, (160 c
Generation	161	LOAD GENERATION, LOAD #161, (161 c
Generation	162	LOAD GENERATION, LOAD #162, (162 c
Generation	163	LOAD GENERATION, LOAD #163, (163 c

You created this PDF from an application that is not licensed to print to novaPDF printer (http://www.novapdf.com)

TEC Software licensed to TEC Inc.	Job No T0694	Sheet No 58	Rev
	Part		
Job Title Merrimack River Bridge PSR Railroad Substructure Reactions	Ref		
	By CMR	Date 5/1/17	Chd JPT
Client City of Lawrence, MA	File RR Loading for Substructu	Date/Time 01-May-2017 14:10	

Job Information Cont...

Type	L/C	Name
Generation	163	LOAD GENERATION, LOAD #163, (163 c
Generation	164	LOAD GENERATION, LOAD #164, (164 c
Generation	165	LOAD GENERATION, LOAD #165, (165 c
Generation	166	LOAD GENERATION, LOAD #166, (166 c
Generation	167	LOAD GENERATION, LOAD #167, (167 c
Generation	168	LOAD GENERATION, LOAD #168, (168 c
Generation	169	LOAD GENERATION, LOAD #169, (169 c
Generation	170	LOAD GENERATION, LOAD #170, (170 c
Generation	171	LOAD GENERATION, LOAD #171, (171 c
Generation	172	LOAD GENERATION, LOAD #172, (172 c
Generation	173	LOAD GENERATION, LOAD #173, (173 c
Generation	174	LOAD GENERATION, LOAD #174, (174 c
Generation	175	LOAD GENERATION, LOAD #175, (175 c
Generation	176	LOAD GENERATION, LOAD #176, (176 c
Generation	177	LOAD GENERATION, LOAD #177, (177 c
Generation	178	LOAD GENERATION, LOAD #178, (178 c
Generation	179	LOAD GENERATION, LOAD #179, (179 c
Generation	180	LOAD GENERATION, LOAD #180, (180 c
Generation	181	LOAD GENERATION, LOAD #181, (181 c
Generation	182	LOAD GENERATION, LOAD #182, (182 c
Generation	183	LOAD GENERATION, LOAD #183, (183 c
Generation	184	LOAD GENERATION, LOAD #184, (184 c
Generation	185	LOAD GENERATION, LOAD #185, (185 c
Generation	186	LOAD GENERATION, LOAD #186, (186 c
Generation	187	LOAD GENERATION, LOAD #187, (187 c
Generation	188	LOAD GENERATION, LOAD #188, (188 c
Generation	189	LOAD GENERATION, LOAD #189, (189 c
Generation	190	LOAD GENERATION, LOAD #190, (190 c
Generation	191	LOAD GENERATION, LOAD #191, (191 c
Generation	192	LOAD GENERATION, LOAD #192, (192 c
Generation	193	LOAD GENERATION, LOAD #193, (193 c
Generation	194	LOAD GENERATION, LOAD #194, (194 c
Generation	195	LOAD GENERATION, LOAD #195, (195 c
Generation	196	LOAD GENERATION, LOAD #196, (196 c
Generation	197	LOAD GENERATION, LOAD #197, (197 c

Nodes

Node	X (ft)	Y (ft)	Z (ft)
1	0.00	0.00	0.00
2	88.00	0.00	0.00

You created this PDF from an application that is not licensed to print to novaPDF printer (http://www.novapdf.com)

TEC Software licensed to TEC Inc.	Job No T0694	Sheet No 69	Rev
	Part		
Job Title Merrimack River Bridge PSR Railroad Substructure Reactions	Ref		
	By CMR	Date 5/1/17	Chd JPT
Client City of Lawrence, MA	File RR Loading for Substructu	Date/Time 01-May-2017 14:10	

Supports

Node	X (lbf/ft)	Y (lbf/ft)	Z (lbf/ft)	rX (kip-ft/deg)	rY (kip-ft/deg)	rZ (kip-ft/deg)
1	Fixed	Fixed	Fixed	-	-	-
2	Fixed	Fixed	Fixed	-	-	-

Moving Loads: Loads 1 to 197

	Initial Position			Increment			
Type	X (ft)	Y (ft)	Z (ft)	X (ft)	Y (ft)	Z (ft)	Range (ft)
1	-109.00	0.00	0.00	1.00	-	-	-

You created this PDF from an application that is not licensed to print to novaPDF printer (http://www.novapdf.com)

Software licensed to TEC Inc.	Job No T0694	Sheet No 7 10 / Rev
	Part	
Job Title Merrimack River Bridge PSR Railroad Substructure Reactions	Ref	
	By CMR Date 5/1/17 Chd JPT	
Client City of Lawrence, MA	File RR Loading for Substructu	Date/Time 01-May-2017 14:10

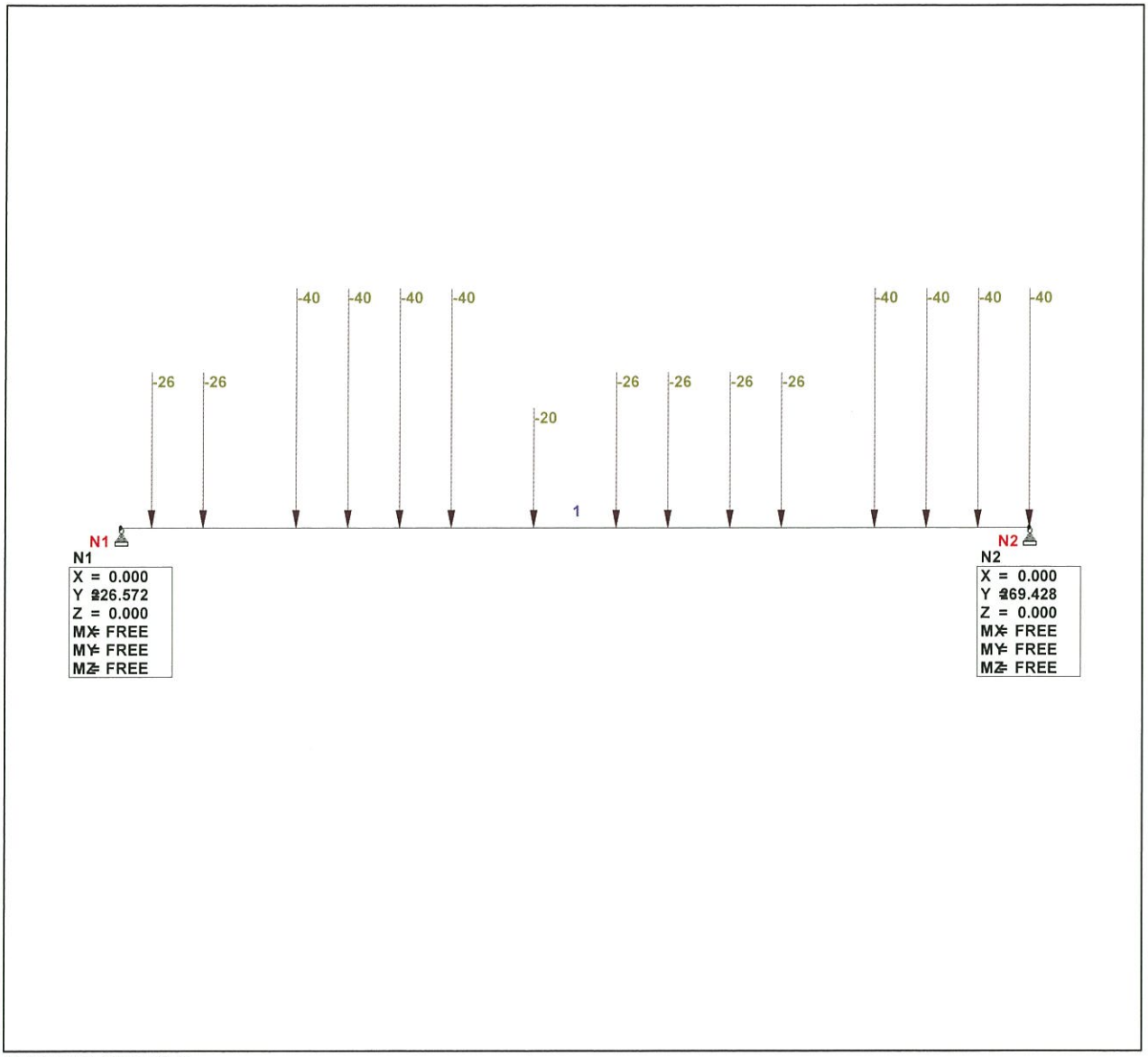

Railroad Max Reaction

You created this PDF from an application that is not licensed to print to novaPDF printer (http://www.novapdf.com)

Software licensed to TEC Inc.	Job No T0694	Sheet No 8 11 / Rev
	Part	
Job Title Merrimack River Bridge PSR Railroad Substructure Reactions	Ref	
	By CMR Date 5/1/17 Chd JPT	
Client City of Lawrence, MA	File RR Loading for Substructu	Date/Time 01-May-2017 14:10

Reaction Summary

	Node	L/C	Horizontal FX (kip)	Vertical FY (kip)	Horizontal FZ (kip)	Moment MX (kip-ft)	MY (kip-ft)	MZ (kip-ft)
Max FX	1	1:LOAD GENE	**0.000**	0.000	0.000	0.000	0.000	0.000
Min FX	1	1:LOAD GENE	**0.000**	0.000	0.000	0.000	0.000	0.000
Max FY	2	102:LOAD GEI	0.000	**269.428**	0.000	0.000	0.000	0.000
Min FY	1	1:LOAD GENE	0.000	**0.000**	0.000	0.000	0.000	0.000
Max FZ	1	1:LOAD GENE	0.000	0.000	**0.000**	0.000	0.000	0.000
Min FZ	1	1:LOAD GENE	0.000	0.000	**0.000**	0.000	0.000	0.000
Max MX	1	1:LOAD GENE	0.000	0.000	0.000	**0.000**	0.000	0.000
Min MX	1	1:LOAD GENE	0.000	0.000	0.000	**0.000**	0.000	0.000
Max MY	1	1:LOAD GENE	0.000	0.000	0.000	0.000	**0.000**	0.000
Min MY	1	1:LOAD GENE	0.000	0.000	0.000	0.000	**0.000**	0.000
Max MZ	1	1:LOAD GENE	0.000	0.000	0.000	0.000	0.000	**0.000**
Min MZ	1	1:LOAD GENE	0.000	0.000	0.000	0.000	0.000	**0.000**

You created this PDF from an application that is not licensed to print to novaPDF printer (http://www.novapdf.com)

05/01/17 14:19:35

Sheet 12

```
STAAD PLANE
START JOB INFORMATION
JOB NAME Merrimack River Bridge PSR H10 Vehicle Substructure Reactions
JOB CLIENT City of Lawrence, MA
JOB NO T0694
ENGINEER NAME CMR
CHECKER NAME JPT
ENGINEER DATE 5/1/17
END JOB INFORMATION
INPUT WIDTH 79
UNIT FEET KIP
JOINT COORDINATES
1 0 0 0; 2 88 0 0;
MEMBER INCIDENCES
1 1 2;
DEFINE MATERIAL START
ISOTROPIC STEEL
E 4.176e+006
POISSON 0.3
DENSITY 0.489024
ALPHA 6e-006
DAMP 0.03
ISOTROPIC CONCRETE
E 453600
POISSON 0.17
DENSITY 0.14999
ALPHA 5.5e-006
DAMP 0.05
END DEFINE MATERIAL
UNIT INCHES KIP
SUPPORTS
1 2 PINNED
UNIT FEET KIP
MEMBER PROPERTY AMERICAN
1 PRIS AX 0.559 IZ 2.18 YD 4.854 ZD 1.25
UNIT INCHES KIP
CONSTANTS
MATERIAL STEEL ALL
UNIT FEET KIP
DEFINE MOVING LOAD
TYPE 1 LOAD 16 4
DIST 14
LOAD GENERATION 102
TYPE 1 -14 0 0 XINC 1
PERFORM ANALYSIS PRINT LOAD DATA
FINISH
```

You created this PDF from an application that is not licensed to print to novaPDF printer (http://www.novapdf.com)

TEC Software licensed to TEC Inc.	Job No T0694	Sheet No 13	Rev
	Part		
Job Title Merrimack River Bridge PSR H10 Vehicle Substructure Reactions	Ref		
	By CMR	Date 5/1/17	Chd JPT
Client City of Lawrence, MA	File H10 Loading for Substruct	Date/Time 01-May-2017 13:59	

Job Information

	Engineer	Checked	Approved
Name:	CMR	JPT	
Date:	5/1/17		

Structure Type	PLANE FRAME

Number of Nodes	2	Highest Node	2
Number of Elements	1	Highest Beam	1

Number of Basic Load Cases	0
Number of Combination Load Cases	0

Included in this printout are data for:

All	The Whole Structure

Included in this printout are results for load cases:

Type	L/C	Name
Generation	1	LOAD GENERATION, LOAD #1, (1 of 102
Generation	2	LOAD GENERATION, LOAD #2, (2 of 102
Generation	3	LOAD GENERATION, LOAD #3, (3 of 102
Generation	4	LOAD GENERATION, LOAD #4, (4 of 102
Generation	5	LOAD GENERATION, LOAD #5, (5 of 102
Generation	6	LOAD GENERATION, LOAD #6, (6 of 102
Generation	7	LOAD GENERATION, LOAD #7, (7 of 102
Generation	8	LOAD GENERATION, LOAD #8, (8 of 102
Generation	9	LOAD GENERATION, LOAD #9, (9 of 102
Generation	10	LOAD GENERATION, LOAD #10, (10 of 1
Generation	11	LOAD GENERATION, LOAD #11, (11 of 1
Generation	12	LOAD GENERATION, LOAD #12, (12 of 1
Generation	13	LOAD GENERATION, LOAD #13, (13 of 1
Generation	14	LOAD GENERATION, LOAD #14, (14 of 1
Generation	15	LOAD GENERATION, LOAD #15, (15 of 1
Generation	16	LOAD GENERATION, LOAD #16, (16 of 1
Generation	17	LOAD GENERATION, LOAD #17, (17 of 1
Generation	18	LOAD GENERATION, LOAD #18, (18 of 1
Generation	19	LOAD GENERATION, LOAD #19, (19 of 1
Generation	20	LOAD GENERATION, LOAD #20, (20 of 1
Generation	21	LOAD GENERATION, LOAD #21, (21 of 1
Generation	22	LOAD GENERATION, LOAD #22, (22 of 1
Generation	23	LOAD GENERATION, LOAD #23, (23 of 1
Generation	24	LOAD GENERATION, LOAD #24, (24 of 1
Generation	25	LOAD GENERATION, LOAD #25, (25 of 1
Generation	26	LOAD GENERATION, LOAD #26, (26 of 1
Generation	27	LOAD GENERATION, LOAD #27, (27 of 1
Generation	28	LOAD GENERATION, LOAD #28, (28 of 1
Generation	29	LOAD GENERATION, LOAD #29, (29 of 1

You created this PDF from an application that is not licensed to print to novaPDF printer (http://www.novapdf.com)

TEC Software licensed to TEC Inc.	Job No T0694	Sheet No 214	Rev
	Part		
Job Title Merrimack River Bridge PSR H10 Vehicle Substructure Reactions	Ref		
	By CMR	Date 5/1/17	Chd JPT
Client City of Lawrence, MA	File H10 Loading for Substruct	Date/Time 01-May-2017 13:59	

Job Information Cont...

Type	L/C	Name
Generation	30	LOAD GENERATION, LOAD #30, (30 of 1
Generation	31	LOAD GENERATION, LOAD #31, (31 of 1
Generation	32	LOAD GENERATION, LOAD #32, (32 of 1
Generation	33	LOAD GENERATION, LOAD #33, (33 of 1
Generation	34	LOAD GENERATION, LOAD #34, (34 of 1
Generation	35	LOAD GENERATION, LOAD #35, (35 of 1
Generation	36	LOAD GENERATION, LOAD #36, (36 of 1
Generation	37	LOAD GENERATION, LOAD #37, (37 of 1
Generation	38	LOAD GENERATION, LOAD #38, (38 of 1
Generation	39	LOAD GENERATION, LOAD #39, (39 of 1
Generation	40	LOAD GENERATION, LOAD #40, (40 of 1
Generation	41	LOAD GENERATION, LOAD #41, (41 of 1
Generation	42	LOAD GENERATION, LOAD #42, (42 of 1
Generation	43	LOAD GENERATION, LOAD #43, (43 of 1
Generation	44	LOAD GENERATION, LOAD #44, (44 of 1
Generation	45	LOAD GENERATION, LOAD #45, (45 of 1
Generation	46	LOAD GENERATION, LOAD #46, (46 of 1
Generation	47	LOAD GENERATION, LOAD #47, (47 of 1
Generation	48	LOAD GENERATION, LOAD #48, (48 of 1
Generation	49	LOAD GENERATION, LOAD #49, (49 of 1
Generation	50	LOAD GENERATION, LOAD #50, (50 of 1
Generation	51	LOAD GENERATION, LOAD #51, (51 of 1
Generation	52	LOAD GENERATION, LOAD #52, (52 of 1
Generation	53	LOAD GENERATION, LOAD #53, (53 of 1
Generation	54	LOAD GENERATION, LOAD #54, (54 of 1
Generation	55	LOAD GENERATION, LOAD #55, (55 of 1
Generation	56	LOAD GENERATION, LOAD #56, (56 of 1
Generation	57	LOAD GENERATION, LOAD #57, (57 of 1
Generation	58	LOAD GENERATION, LOAD #58, (58 of 1
Generation	59	LOAD GENERATION, LOAD #59, (59 of 1
Generation	60	LOAD GENERATION, LOAD #60, (60 of 1
Generation	61	LOAD GENERATION, LOAD #61, (61 of 1
Generation	62	LOAD GENERATION, LOAD #62, (62 of 1
Generation	63	LOAD GENERATION, LOAD #63, (63 of 1
Generation	64	LOAD GENERATION, LOAD #64, (64 of 1
Generation	65	LOAD GENERATION, LOAD #65, (65 of 1
Generation	66	LOAD GENERATION, LOAD #66, (66 of 1
Generation	67	LOAD GENERATION, LOAD #67, (67 of 1
Generation	68	LOAD GENERATION, LOAD #68, (68 of 1
Generation	69	LOAD GENERATION, LOAD #69, (69 of 1
Generation	70	LOAD GENERATION, LOAD #70, (70 of 1
Generation	71	LOAD GENERATION, LOAD #71, (71 of 1
Generation	72	LOAD GENERATION, LOAD #72, (72 of 1
Generation	73	LOAD GENERATION, LOAD #73, (73 of 1
Generation	74	LOAD GENERATION, LOAD #74, (74 of 1

You created this PDF from an application that is not licensed to print to novaPDF printer (http://www.novapdf.com)

TEC Software licensed to TEC Inc.	Job No T0694	Sheet No 3 of 5	Rev
	Part		
Job Title Merrimack River Bridge PSR H10 Vehicle Substructure Reactions	Ref		
	By CMR	Date 5/1/17	Chd JPT
Client City of Lawrence, MA	File H10 Loading for Substruct	Date/Time 01-May-2017 13:59	

Job Information Cont...

Type	L/C	Name
Generation	75	LOAD GENERATION, LOAD #75, (75 of 1
Generation	76	LOAD GENERATION, LOAD #76, (76 of 1
Generation	77	LOAD GENERATION, LOAD #77, (77 of 1
Generation	78	LOAD GENERATION, LOAD #78, (78 of 1
Generation	79	LOAD GENERATION, LOAD #79, (79 of 1
Generation	80	LOAD GENERATION, LOAD #80, (80 of 1
Generation	81	LOAD GENERATION, LOAD #81, (81 of 1
Generation	82	LOAD GENERATION, LOAD #82, (82 of 1
Generation	83	LOAD GENERATION, LOAD #83, (83 of 1
Generation	84	LOAD GENERATION, LOAD #84, (84 of 1
Generation	85	LOAD GENERATION, LOAD #85, (85 of 1
Generation	86	LOAD GENERATION, LOAD #86, (86 of 1
Generation	87	LOAD GENERATION, LOAD #87, (87 of 1
Generation	88	LOAD GENERATION, LOAD #88, (88 of 1
Generation	89	LOAD GENERATION, LOAD #89, (89 of 1
Generation	90	LOAD GENERATION, LOAD #90, (90 of 1
Generation	91	LOAD GENERATION, LOAD #91, (91 of 1
Generation	92	LOAD GENERATION, LOAD #92, (92 of 1
Generation	93	LOAD GENERATION, LOAD #93, (93 of 1
Generation	94	LOAD GENERATION, LOAD #94, (94 of 1
Generation	95	LOAD GENERATION, LOAD #95, (95 of 1
Generation	96	LOAD GENERATION, LOAD #96, (96 of 1
Generation	97	LOAD GENERATION, LOAD #97, (97 of 1
Generation	98	LOAD GENERATION, LOAD #98, (98 of 1
Generation	99	LOAD GENERATION, LOAD #99, (99 of 1
Generation	100	LOAD GENERATION, LOAD #100, (100 c
Generation	101	LOAD GENERATION, LOAD #101, (101 c
Generation	102	LOAD GENERATION, LOAD #102, (102 c

Nodes

Node	X (ft)	Y (ft)	Z (ft)
1	0.00	0.00	0.00
2	88.00	0.00	0.00

Supports

Node	X (lbf/ft)	Y (lbf/ft)	Z (lbf/ft)	rX (kip˙ft/deg)	rY (kip˙ft/deg)	rZ (kip˙ft/deg)
1	Fixed	Fixed	Fixed	-	-	-
2	Fixed	Fixed	Fixed	-	-	-

You created this PDF from an application that is not licensed to print to novaPDF printer (http://www.novapdf.com)

TEC Software licensed to TEC Inc.	Job No T0694	Sheet No 416	Rev
	Part		
Job Title Merrimack River Bridge PSR H10 Vehicle Substructure Reactions	Ref		
	By CMR	Date 5/1/17	Chd JPT
Client City of Lawrence, MA	File H10 Loading for Substruct	Date/Time 01-May-2017 13:59	

Moving Loads: Loads 1 to 102

Type	Initial Position X (ft)	Y (ft)	Z (ft)	Increment X (ft)	Y (ft)	Z (ft)	Range (ft)
1	-14.00	0.00	0.00	1.00	-	-	-

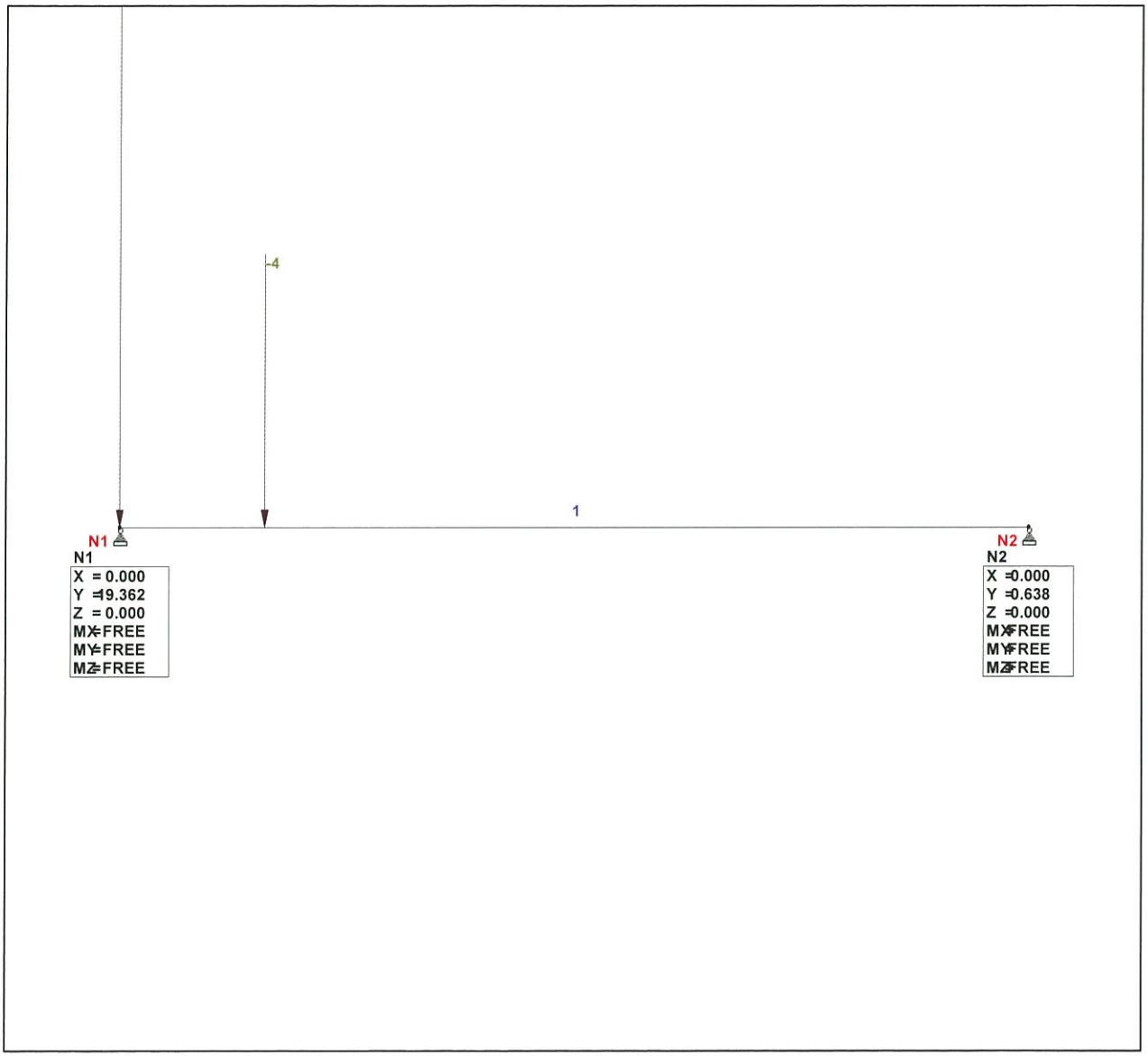

H10 Vehicle Max Reaction

You created this PDF from an application that is not licensed to print to novaPDF printer (http://www.novapdf.com)

TEC Software licensed to TEC Inc.	Job No T0694	Sheet No 5 of 17 Rev
	Part	
Job Title Merrimack River Bridge PSR H10 Vehicle Substructure Reactions	Ref	
	By CMR Date 5/1/17 Chd JPT	
Client City of Lawrence, MA	File H10 Loading for Substruct	Date/Time 01-May-2017 13:59

Reaction Summary

	Node	L/C	Horizontal FX (kip)	Vertical FY (kip)	Horizontal FZ (kip)	Moment MX (kip-ft)	MY (kip-ft)	MZ (kip-ft)
Max FX	1	1:LOAD GENE	**0.000**	4.000	0.000	0.000	0.000	0.000
Min FX	1	1:LOAD GENE	**0.000**	4.000	0.000	0.000	0.000	0.000
Max FY	1	15:LOAD GEN	0.000	**19.362**	0.000	0.000	0.000	0.000
Min FY	2	1:LOAD GENE	0.000	**0.000**	0.000	0.000	0.000	0.000
Max FZ	1	1:LOAD GENE	0.000	4.000	**0.000**	0.000	0.000	0.000
Min FZ	1	1:LOAD GENE	0.000	4.000	**0.000**	0.000	0.000	0.000
Max MX	1	1:LOAD GENE	0.000	4.000	0.000	**0.000**	0.000	0.000
Min MX	1	1:LOAD GENE	0.000	4.000	0.000	**0.000**	0.000	0.000
Max MY	1	1:LOAD GENE	0.000	4.000	0.000	0.000	**0.000**	0.000
Min MY	1	1:LOAD GENE	0.000	4.000	0.000	0.000	**0.000**	0.000
Max MZ	1	1:LOAD GENE	0.000	4.000	0.000	0.000	0.000	**0.000**
Min MZ	1	1:LOAD GENE	0.000	4.000	0.000	0.000	0.000	**0.000**

You created this PDF from an application that is not licensed to print to novaPDF printer (http://www.novapdf.com)

65 Glenn Street, Lawrence, MA 01843
tel 978.794.1792 | fax 978.794.1793 | www.theengineeringcorp.com

CALCULATIONS

JOB: _____ JOB NUMBER: _____

LOCATION: _____ DATE: _____

TITLE: _____ SHEET: _____ OF _____

CALCULATED BY: _____ CHECKED BY: _____

Seismic Analysis

65 Glenn Street, Lawrence, MA 01843
tel 978.794.1792 | fax 978.794.1793 | www.theengineeringcorp.com

CALCULATIONS

JOB: Merrimack River Bridge PSR
JOB NUMBER: T0694
LOCATION: Lawrence, MA
DATE: 6/13/17
TITLE: Seismic Analysis
SHEET: 1 OF 2
CALCULATED BY: CMR
CHECKED BY: KRF

REF

Seismic Analysis

- Per section 2.4.2.6.III, evaluate substructure per section 3.4 of Part I of B/M.
- Per B/M use Chapter 4 of AASHTO, LRFD

Acceleration Coefficients

Peak Ground Acceleration	PGA	=	0.125
Acceleration Coefficient @ 0.2s	S_s	=	0.19
Acceleration Coefficient @ 1.0s	S_1	=	0.06

B/M Appendix

Site Class

Assume site class B based on assumption of founded on rock

Site Factors :	F_{pga}	=	1.0
	F_a	=	1.0
	F_v	=	1.0

AASHTO
T3.10.3.2-1
T3.10.3.2-2
T3.10.3.2-3

65 Glenn Street, Lawrence, MA 01843
tel 978.794.1792 | fax 978.794.1793 | www.theengineeringcorp.com

CALCULATIONS

JOB: Merimack River Bridge ASR
JOB NUMBER: T0694
LOCATION: Lawrence, MA
DATE: 6/13/17
TITLE: Seismic Analysis
SHEET: 2 OF 2
CALCULATED BY: CMR
CHECKED BY: KRF

REF

Adjusted Response Parameters

AASHTO 3.10.4.2

$A_S = F_{pga} \times PGA = 1.0(0.125) = 0.125$

$S_{DS} = F_a \times S_s = 1.0(0.19) = 0.19$

$S_{D1} = F_v \times S_1 = 1.0(0.06) = 0.06$

Seismic Performance Zone

For $S_{D1} \leq 0.15$ → Seismic Performance Zone I — AASHTO 3.10.6.1

Multi-Span Bridges

AASHTO 4.7.4.3

Seismic Zone I, Multispan Bridges → No Seismic Analysis Required

specified in Chapter 3 of this Bridge Manual, including their capacity to withstand seismic demands. The results of these analyses shall be presented to the Bridge Section for consideration and final determination as to the course of action. The State Bridge Engineer shall determine what code requirements can be waived or not waived in deciding the re-use of the existing substructure units. This analysis will be performed as follows:

I. Load Carrying Capacity. Check the existing substructure units for HL-93 live load and the proposed superstructure dead loads using the LRFD Strength I Limit State and all applicable load and resistance factors. If the existing substructure units do not meet the Strength I Limit State for HL-93 loading, check capacity of the existing substructure units for HS25 loading and the new superstructure dead loads using the *AASHTO Standard Specifications for Highway Bridges* using the Load Factor method. If the existing substructure units do not meet the HS25 loading using the Load Factor Method, then determine if or how the substructure can be upgraded to meet HL-93 requirements along with a cost estimate for this upgrade.

   Substructures of historic structures that are being rehabilitated need only be checked to meet the anticipated truck loading that will be used for the design of the superstructure as specified in Subsection 3.1.3 of Part I of this Bridge Manual.

II. Code Compliance. The existing substructure units potentially will not meet all of the detailing requirements of the *AASHTO LRFD Bridge Design Specifications.* A check will be made to determine which of the LRFD code requirements they meet and which they do not. This analysis shall also include a study of the feasibility and cost of upgrading them to these code requirements. If such an upgrade is not practical or cost effective, then check the existing substructure units to see if they meet the *AASHTO Standard Specifications for Highway Bridges* Load Factor requirements for detailing. If they do not meet the Load Factor requirements for detailing, a study shall be performed to determine the feasibility and cost of upgrading them to the Load Factor requirements.

III. Seismic Evaluation. The existing substructure units shall be analyzed for their capacity to resist seismic demands. This evaluation shall be performed using the seismic analysis and design procedures outlined in Section 3.4 of Part I of this Bridge Manual. The return period used shall be based on whether the bridge under consideration is Critical/Essential or not. The analysis and evaluation shall be performed as if this it were a new bridge. The detailing requirements need not be greater than what is required for the SDC classification of the bridge, i.e. SDC A detailing for bridges classified as SDC A, SDC B detailing for bridges classified as SDC B, etc.

   If the bridge does not have the capacity to meet the seismic demand, check if a seismic isolation Earthquake Resisting System using elastomeric or PTFE bearings will help the structure meet the seismic demand. If the substructure units still do not have the capacity to meet the seismic demand, determine the feasibility and cost of upgrading them to meet that demand.

   For certain structures where the re-use of the existing substructure units is essential, the expense of performing a multimode spectral analysis, alone or in combination with a site specific hazard analysis, can be justified since it may lower the seismic demand to a level that the existing substructure units can meet, or can be cost effectively upgraded to meet the demand.

2.4.2.7 GEOTECHNICAL EVALUATION. A subsurface exploratory program, in accordance with the guidelines of Chapter 1, shall be performed, which may include probes, borings and in-situ testing,

Appendix B

Preliminary Bridge Evaluation

Prepared August 24, 2016 by Hardesty & Hanover, LLP

Manchester Lawrence Rail Corridor EPA Brownfield Area-Wide Plan

PRELIMINARY BRIDGE EVALUATION

August 24, 2016

Prepared for:

Prepared by:

Hardesty & Hanover
engineering that moves you

60 K Street, 4th Floor
Boston, Massachusetts 02127

LAWRENCE MLRC BRIDGE CONSIDERATIONS

GENERAL INFORMATION:

There are four bridge crossings along the MLRC of concern that formerly carried railway operations. The limited plans we have are dated 1895. The general condition of the structures is adequate for rehabilitation for pedestrian or maintenance vehicle traffic. The structures were designed for freight traffic. All structures will require a thorough inspection and measurement of the substructure and superstructure as part of a rehabilitation effort. No current or past inspection reports have been located. Complete plan sets for the bridges are not available for most locations. Costs for inspection of the three smaller bridges would be about $12,000. The Merrimack River Bridge inspection would be approximately $10,000 to $20,000 depending on the level required by MassDOT.

Each bridge structure will be discussed separately as follows:

B & M RR over MANCHESTER ST:

The Manchester Street Bridge is a 62’-0” long two-track thru-girder structure with a center girder and two outside girders. The track remains on one side only. The plate girder structure has limited vertical clearance over Manchester Street and shows signs of being hit. There is a punched hole in the web about 14”x36”. This damage can be repaired with little cost. The general condition of the three girder structure, as well as the large granite block abutments, is good.

The City may want to investigate increasing the vertical clearance over Merrimack Street. Raising the existing structure is feasible but ramp structures will be needed to get this added clearance. We have included a General Plan and Transverse and Longitudinal Sections showing the bridge lifted approximately 4’-6” to allow 14’-6” vertical clearance. Ramps at each end extend down to existing rail level at a 5% slope. Slopes will extend approximately 100 ft. on each end of the bridge. Alternatively, a new bridge superstructure could be used such as a prefabricated truss structure.

EXISTING RETAINING WALL NORTH OF MANCHESTER ST BETWEEN TRACKS:

Between the two tracks, running parallel an existing knee high concrete retaining wall is in poor condition. It has tilted several inches from tree roots and general inadequate footings. During any removal of trees or the rails and ties this wall may be removed and the area re-graded.

B & M RR over NORTH CANAL:

The North Canal Bridge is an approximately 100 ft. long single track supported on a parallel multi-girder steel structure with track and ties in place. The ties are in poor condition. The structure is over the outfall of a dam structure parallel to the track. From the track surface a minor visual inspection did not indicate an issue with re-use. The substructure could not be observed; however, the masonry work for the adjacent structures was very robust.

B & M RR over MERRIMACK RIVER:

The Merrimack River crossing is a two-track wide (rails for one track) six-span approximately 540 ft. long deck over truss structure. The bottom chord consists of forged eye-bar tension members and pin connections. The substructure is granite faced masonry piers and abutments likely resting on bedrock. The general condition of the superstructure and substructure is very good from a visual observation.

B & M RR over SOUTH CANAL BRIDGE:

The South Canal Bridge is a 65 ft. two-track configuration over a parallel multi-girder steel superstructure with a single-track and ties in place. The ties are in poor condition. The structure is over the South Canal. From the track surface and side of structure a minor visual inspection did not indicate an issue with re-use. The substructure could not be fully be observed however the masonry work for the adjacent canal walls was intact.

PROPOSED MULTI-USE STRUCTURES ON BRIDGES:

Decking Options:

For pedestrian, bicycle and small maintenance UTV traffic a timber or fiberglass grating deck structure may be used. If larger maintenance and emergency vehicles will require access then a concrete deck is recommended. Wood types include native and exotic species such as IPE or cumuru tropical hardwoods and treated southern pine (not recommended) or native black locust. For vehicular access, longevity and ease of maintenance a concrete deck is shown in the typical section.

Rail types include timber, galvanized painted steel or a combination of both materials. If timber decking is used then the decking will span transversely for safety with bicycles and strollers and wheelchairs. All decking shall be ADA compliant.

Construction Cost:

At this early stage of design, costs for the addition of a concrete deck and rails will be computed using $150/SF for the concrete or timber deck and $240/FT for the rail.

Removal of the existing rails and ties is not included here as this can vary depending if salvage value is included. Track and tie removal will be part of the larger project and not included in the bridge cost. See the attached sheet for costs of each bridge.

TOWN:	LAWRENCE			CLASS:	0
STATION:		ROAD:	MLRC	OVER:	VARIES
TYPE:	STEEL STRINGER	ROADWAY:	VARIES	SIDEWALKS:	
SPANS:	VARIES	LENGTH:	VARIES	VERTICAL CL.:	VARIES

ORDER OF MAGNITUDE BRIDGE ESTIMATE

ITEM	QUANTITY	UNITS	DESCRIPTION	UNIT PRICE	AMOUNT
995.1	893	SF	BRIDGE STRUCTURE - MANCHESTER STREET	$150	$133,997
995.2	1360	SF	BRIDGE STRUCTURE - NORTH CANAL	$150	$203,999
995.3	8000	SF	BRIDGE STRUCTURE - MERRIMACK RIVER	$150	$1,199,970
995.4	867	SF	BRIDGE STRUCTURE - SOUTH CANAL	$150	$130,000
995.6	1668	LF	BRIDGE RAIL	$220	$366,960
106.30	1	LS	STEEL REPAIRS	$300,000	$300,000

Bridge Item Total: **$2,340,000**

MANCHESTER ST BRIDGE – PLAN

1/4" = 1'-0"

BIDDING DRAWING - NOT FOR CONSTRUCTION

LAWRENCE, MASSACHUSETTS

LAWRENCE MLRC □RIDGES

MANCHESTER STREET □RIDGE GENERAL PLAN

SCALE: AS NOTED
PROJECT NO.: □□2.00
CONSTR. CONTR. NO.: □
DRAWING NO.: S-1
SHEET 1 OF 6

DES RNH | DRW RNH | CHK EMM
SATISFACTOR□ TO | DATE
APPROVED
APPROVED
A/E INFO

HARDEST□ □ HANOVER□LLC
60 K STREET
□OSTON□MA 0212□
P: 61□268.201□

SEAL

S□M.	DESCRIPTION	DATE	APPR.
	□IDDING DOC□MENTS	8/22/2016	

GENERAL PLAN
NORTH CANAL BRIDGE

¼" = 1'-0"

BIDDING DRAWING - NOT FOR CONSTRUCTION

LAWRENCE, MASSACHUSETTS

LAWRENCE MLRC □RIDGES

NORTH CANAL □RIDGE GENERAL PLAN

SCALE: AS NOTED
PROJECT NO.: □□□2.00
CONSTR. CONTR. NO. □
DRAWING NO. S-2
SHEET 2 OF 6

DES RNH | DRW RNH | CHK EMM
SATISFACTOR□ TO DATE
APPROVED

APPROVED
A/E INFO

HARDEST□ □ HANOVER□LLC
60 K STREET
□OSTON□MA 0212□
P: 61□268.201□

SEAL

S□M.	DESCRIPTION	DATE	APPR.
	□IDDING DOC□MENTS	8/22/2016	

GENERAL PLAN
MERRIMACK RIVER BRIDGE
1" = 20'-0"

BIDDING DRAWING - NOT FOR CONSTRUCTION

LAWRENCE, MASSACHUSETTS

LAWRENCE MLRC □RIDGES

MERRIMACK RIVER □RIDGE GENERAL PLAN

SCALE: AS NOTED
PROJECT NO.: □□□2.00
CONSTR. CONTR. NO. □
DRAWING NO. S-□
SHEET □ OF 6

DES RNH | DRW RNH | CHK EMM
SATISFACTOR□ TO DATE
APPROVED

APPROVED
A/E INFO

HARDEST□ □ HANOVER□LLC
60 K STREET
□OSTON□MA 0212□
P: 61□268 201□

SEAL

S□M.	DESCRIPTION	DATE	APPR.
	□IDDING DOC□MENTS	8/22/2016	

GENERAL PLAN
SOUTH CANAL BRIDGE
¼" = 1'-0"

BIDDING DRAWING - NOT FOR CONSTRUCTION

LAWRENCE, MASSACHUSETTS

LAWRENCE MLRC □RIDGES

SO□TH CANAL □RIDGE GENERAL PLAN

SCALE: AS NOTED
PROJECT NO.: □□□2.00
CONSTR. CONTR. NO. □
DRAWING NO. S-4
SHEET 4 OF 6

DES RNH | DRW RNH | CHK EMM
SATISFACTOR□TO DATE
APPROVED
APPROVED
A/E INFO

HARDEST□ □ HANOVER□LLC
60 K STREET
□OSTON□MA 0212□
P: 61□268.201□

SEAL

S□M.	DESCRIPTION	DATE	APPR.
	□IDDING DOC□MENTS	8/22/2016	

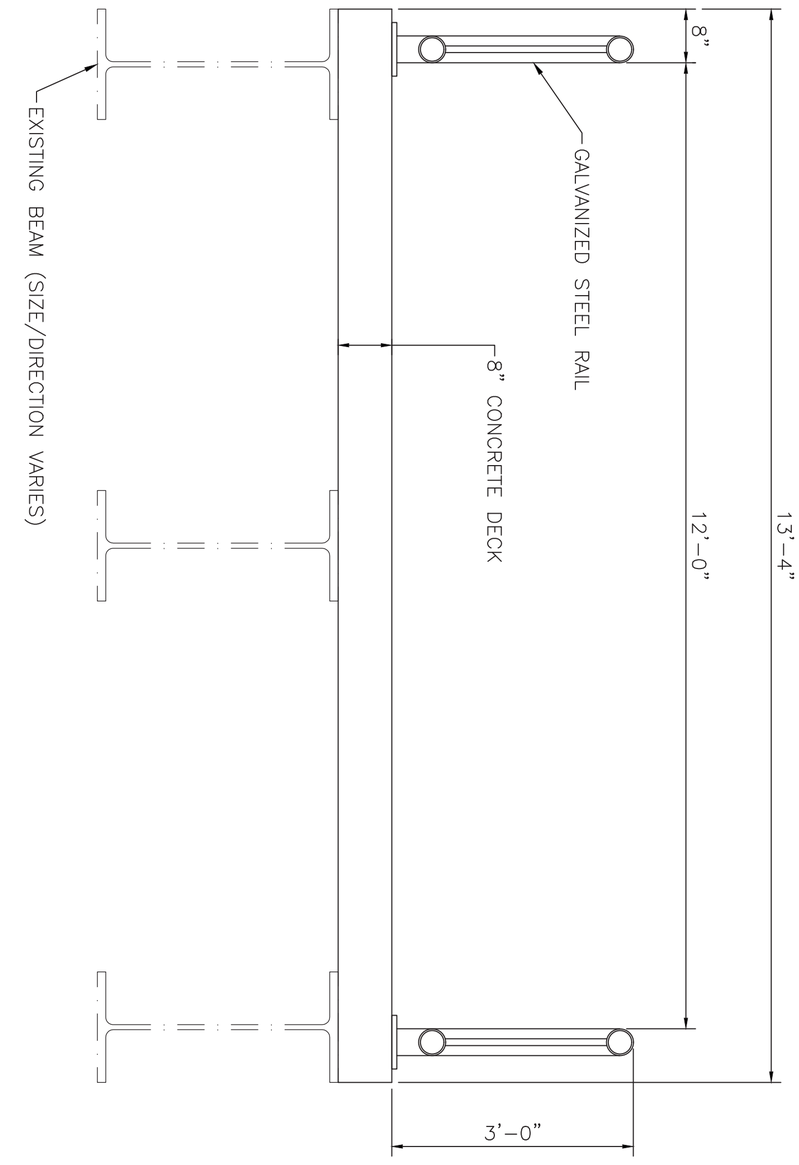

TYPICAL SECTION

SCALE: ¾" = 1'-0"

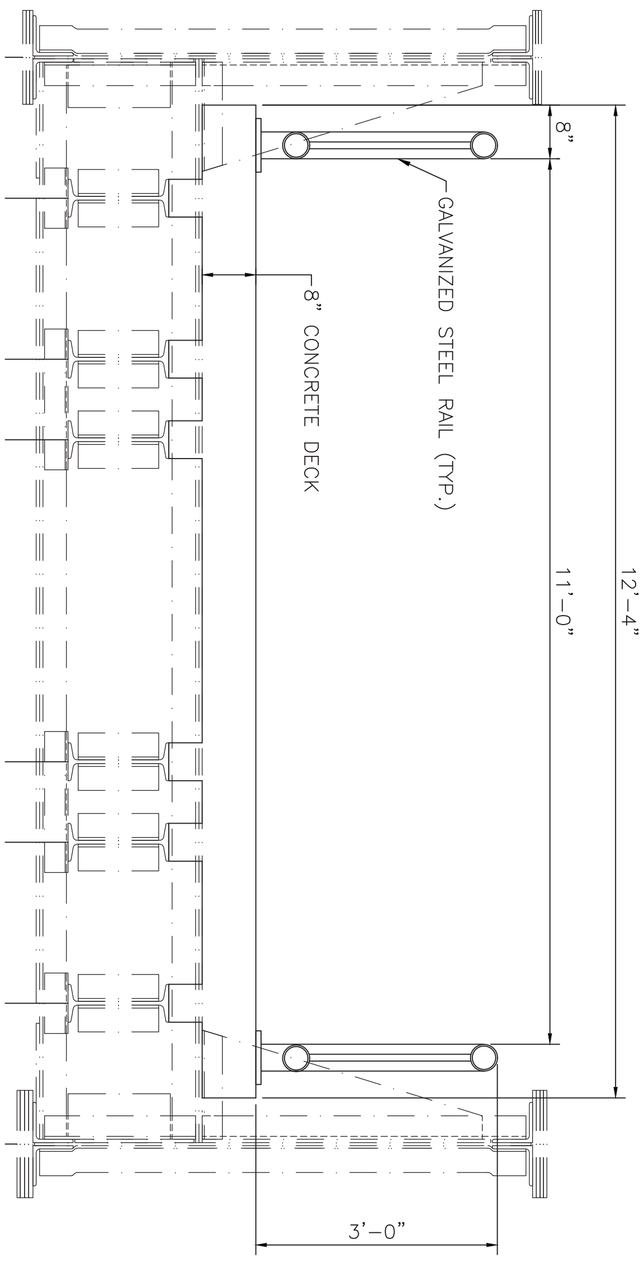

SECTION AT MANCHESTER STREET

SCALE: ¾" = 1'-0"

BIDDING DRAWING - NOT FOR CONSTRUCTION

LAWRENCE, MASSACHUSETTS

LAWRENCE MLRC □RIDGES

□RIDGE CROSS SECTIONS

SCALE: AS NOTED
PROJECT NO: □□2.00
CONSTR. CONTR. NO. □
DRAWING NO. S-5
SHEET 5 OF 6

DES RNH | DRW RNH | CHK EMM
SATISFACTOR□ TO DATE
APPROVED

APPROVED
A/E INFO

HARDEST□ □ HANOVER□LLC
60 K STREET
□OSTON□MA 0212□
P: 61□268.201□

SEAL

S□M.	DESCRIPTION	DATE	APPR.
	□IDDING DOC□MENTS	8/22/2016	

MANCHESTER STREET – LONGITUDINAL SECTION

SCALE: ¼" = 1'-0"

BIDDING DRAWING - NOT FOR CONSTRUCTION

LAWRENCE, MASSACHUSETTS

LAWRENCE MLRC □RIDGES

MANCHESTER STREET
LONGIT□DINAL SECTION

SCALE: AS NOTED
PROJECT NO.: □□2.00
CONSTR. CONTR. NO. □
DRAWING NO. S-6
SHEET 6 OF 6

DES RNH | DRW RNH | CHK EMM
SATISFACTOR□ TO DATE
APPROVED
APPROVED
A/E INFO

HARDEST□ □ HANOVER□LLC
60 K STREET
□OSTON□MA 0212□
P: 61□268.201□

SEAL

S□M.	DESCRIPTION	DATE	APPR.
	□IDDING DOC□MENTS	8/22/2016	

Appendix C

Routine Underwater Inspection Report

(Dated 8/6/2020)

MASSACHUSETTS DEPARTMENT OF TRANSPORTATION PAGE 1 OF 7

2-DIST	B.I.N.
04	C82

UNDERWATER OPERATIONS TEAM
ROUTINE UNDERWATER INSPECTION REPORT

BR. DEPT. NO. L-04-032

CITY/TOWN	8-STRUCTURE NO.	LEVEL OF INSPECTION	93B-DATE INSPECTED
LAWRENCE	L04032-C82-DOT-DES	IV	AUG 6, 2020

07-FACILITY CARRIED	ACCESS TO BRIDGE	UNDERWATER OPERATIONS ENGINEER
RR ABANDONED RR	US LEFT EMBANKMENT	RANDI E. BONICA

06-FEATURES INTERSECTED	DEPTH	VISIBILITY	TEAM LEADER (DIVE MASTER)	*Report submitted by:*
WATER MERRIMACK RIVER	2.5 m	1.5 m	RANDI E. BONICA	

BOTTOM CONDITION	CURRENT	TEAM MEMBERS
LEDGE, BOULDERS	VERY SWIFT	W. J. COLLERAN, G. BROZ, B. FITZGERALD, Z. GIKAS, J. A. MANKOWSKY

ITEM 60 *SUBSTRUCTURE* — 5

		DEF
1. Abutments	N	
a. Pedestals	N	-
b. Bridge Seats	N	-
c. Backwalls	N	-
d. Breastwalls	N	-
e. Wingwalls	N	-
f. Slope Paving/Rip-Rap	N	-
g. Pointing	N	-
h. Footings	N	-
i. Piles	N	-
j. Scour	N	-
k. Settlement	N	-
l.	N	-
2. Piers or Bents	N	
a. Pedestals	N	-
b. Caps	N	-
c. Columns	N	-
d. Stems/Webs/Pierwalls	7	-
e. Pointing	6	-
f. Footing	5	-
g. Piles	X	-
h. Scour	5	-
i. Settlement	6	-
j.	N	-
k.	N	-
3. Pile Bents	N	
a. Pile Caps	N	-
b. Piles	N	-
c. Diagonal Bracing	N	-
d. Horizontal Bracing	N	-
e. Fasteners	N	-
UNDERMINING (Y/N)		N

ITEM 61 *CHANNEL & CHANNEL PROTECTION* — 5

		DEF
1. Channel Scour	5	-
2. Embankment Erosion	8	-
3. Debris	7	-
4. Vegetation	6	M-A
5. Utilities	N	-
6. Rip-Rap/Slope Protection	8	-
7. Aggradation	7	-
8. Fender System	N	-
a. Piles	N	-
b. Diagonal Bracing	N	-
c. Horizontal Bracing	N	-
d. Wales	N	-
e. Fasteners	N	-
f. Ladders	N	-
9.	N	-

ITEM 59 *SUPERSTRUCTURE*

		DEF
	N	-
	N	-
	N	-

ITEM 62 *CULVERTS* — N

		DEF
1. Roof	N	-
2. Floor	N	-
3. Walls	N	-
4. Headwall	N	-
5. Wingwall	N	-
6. Pipe	N	-
7. Protective Coating	N	-
8. Embankment	N	-
9. Wearing Surface	N	-
10. Railing	N	-
11. Sidewalks	N	-
12. Utilities	N	-
13. Member Alignment	N	-
14. Deformation	N	-
15. Scour	N	-
16. Settlement	N	-
17.	N	-
18.	N	-
UNDERMINING (Y/N)		N

DEFICIENCY REPORTING GUIDE

DEFICIENCY: A defect in a structure that requires corrective action.

CATEGORIES OF DEFICIENCIES:

M= Minor Deficiency- - Deficiencies which are minor in nature, generally do not impact the structural integrity of the bridge and could easily be repaired. Examples include but are not limited to: Spalled concrete, Minor scouring, etc.

S= Severe/Major Deficiency- Deficiencies which are more extensive in nature and need more planning and effort to repair. Examples include but are not limited to: Moderate to major deterioration in concrete, Exposed and corroding rebars, Deteriorated timber piles, Considerable settlement, Considerable scouring or undermining, etc.

C-S= Critical Structural Deficiency- A deficiency in a structural element of a bridge that poses an extreme unsafe condition due to the failure or imminent failure of the element which will affect the structural integrity of the bridge.

C-H= Critical Hazard Deficiency- A deficiency in a component or element of a bridge that poses an extreme hazard or unsafe condition to the public, but does not impair the structural integrity of the bridge. Examples include but are not limited to: Any part of piles or fender system which are projecting outward and may become a safety hazard for the navigational traffic, etc.

URGENCY OF REPAIR:

I=Immediate- [Inspector(s) immediately contact District Bridge Inspection Engineer (DBIE) to report the Deficiency and to receive further instruction from him/her.]

A=ASAP- [Action/Repair should be initiated by District Maintenance Engineer or the responsible party (if not a State owned bridge) upon receipt of the Inspection Report.]

P=Prioritize- [Shall be prioritized by District Maintenance Engineer or the Responsible Party (if not a State owned bridge) and repairs made when funds and/or manpower is available.]

X=UNKNOWN **N=NOT APPLICABLE** **H=HIDDEN/INACCESSIBLE** **R=REMOVED**

CITY/TOWN	B.I.N.	BR. DEPT. NO.	8.-STRUCTURE NO.	INSPECTION DATE
LAWRENCE	**C82**	**L-04-032**	**L04032-C82-DOT-DES**	**AUG 6, 2020**

REMARKS

GENERAL REMARKS

An underwater inspection was requested for the abandoned railroad bridge over the Merrimack River downstream of Route 28 and a dam in Lawrence. The MassDOT Underwater Operations Dive Team inspected the bridge piers on August 6, 2020.

Five granite block piers were inspected underwater. Both abutments are in the dry and were not inspected. Piers are numbered from right to left and abutments are labeled right and left, looking downstream.
Piers have different shapes and measurements and are shown on the Plan View. Piers #1 and #5 have the same measurements. Piers #2 and #4 have the same measurements. Pier #3 is different.
Much of the channel is dry with ledge and boulders exposed. Piers #1 and #5 were completely dry during this inspection. It appears that all piers are founded on ledge. No plans were available.
The downstream end of all piers is Sta 10+00.

The power company should be notified prior to an inspection to determine if any power plant outfall flow is scheduled.

Scott (508-265-3285)
Emergencies (267-296-4349)
General Inquiries (978-685-8074)

ITEM 60 - SUBSTRUCTURE

Item 60.2 - Piers or Bents
Item 60.2.d - Stems/Webs/Pierwalls

Granite block piers have different shapes and measurements (see Plan View). All pier sides are battered. Piers #1 and #5 have the same measurements. Piers #2 and #4 have the same measurements. Pier #3 is different.

Pier #1:
Pier is in the dry. Pier has 14 courses. Downstream width is 11' and pier length measured 45'.
Maximum joint penetration between blocks is 3'.
At Sta 10+08 at the left side there is a vertical 1/4" wide crack in the 1st course.
At the downstream end, 5' from the downstream right corner there is a vertical 1/8" crack in the 1st course.

Pier #2:
Pier has a total of 16 courses. Downstream width is 15' and pier length is 64'. The sides have an angle approximately 23' from the upstream end.
The upstream end extends beyond the bridge. The upstream end is 8' wide and has 4 vertical courses above ledge. The vertical height of the four courses is approximately 6' above ledge. The upstream face is sloped from the top of the 4th course to the bridge seat. Two large granite blocks are along the sloped nose and extend to the bridge seat.
Maximum joint penetration between blocks is 2.5'.

Pier #3:
The upstream nose of the pier is approximately 50' from the pier of the upstream Route 28 bridge pier.
Pier has 13 courses. Downstream width is 11' and pier length is 64'. The sides have an angle approximately 17' from the upstream nose.
The upstream end extends beyond the bridge. The upstream nose is sloped from the ledge to the bridge seat. The upstream nose is pointed, approximately 7' long.

CITY/TOWN	B.I.N.	BR. DEPT. NO.	8.-STRUCTURE NO.	INSPECTION DATE
LAWRENCE	**C82**	**L-04-032**	**L04032-C82-DOT-DES**	**AUG 6, 2020**

REMARKS

Item 60.2.d - Stems/Webs/Pierwalls (Cont'd)

Maximum joint penetration is 2.6'.
There is a vertical hairline crack at the right side 1' from the nose in the 2nd course.
There is undermining along both sides.
At Sta 10+50 at the left side a block in the bottom course has settled 1/2" at the downstream end of the block. The settled block is above an undermined area.

Pier #4:
Pier has a total of 16 courses. Downstream width is 15' and pier length is 64'. The sides have an angle approximately 23' from the upstream end.
The upstream end extends beyond the bridge. The upstream end is 8' wide and has 5 vertical courses above ledge. The vertical height of the four courses is approximately 7' above ledge. The upstream face is sloped from the top of the 5th course to the bridge seat. Two large granite blocks are along the sloped nose and extend to the bridge seat.
Maximum joint penetration between blocks at the sides is 1.9'. The upstream nose has full depth penetration.
At Sta 10+06 at the left side there is a 1/4" crack in the 3rd course.
At the upstream nose there is a 1/16" vertical crack at the centerline of the pier in the 5th course. The crack propagated from a steel ring imbedded into the top horizontal face of the block in the 5th course.

Pier #5:
Pier is in the dry. Pier has 14 courses. Downstream width is 11' and pier length measured 45'.
Maximum joint penetration between blocks is 1.8'.
There is a hairline vertical crack at the right side at Sta 10+40, in the 2nd course.
There is a hairline vertical crack at the right side at Sta 10+40, in the 4th course.
There is a hairline vertical crack at the left side at Sta 10+31, in the 2nd course.

Item 60.2.e - Pointing
Some mortar between blocks is missing in the pierwalls.

Pier #1 - Maximum joint penetration is 3'.
Pier #2 - Maximum joint penetration is 2.5'.
Pier #3 - Maximum joint penetration is 2.6'.
Pier #4 - Maximum joint penetration is 1.9'
Pier #5 - Maximum joint penetration is 1.8'.

Item 60.2.f - Footing
Pier #3:
Left Side:
A leveling course/footing consisting of stones is exposed along the left side from Sta 9+98 to the upstream nose. Toe varies from 0 to 2'.
There is undermining at the left side. Undermining is due to missing stones of the leveling course.
The following areas of undermining were measured:

From Sta 10+12 to Sta 10+16, 1.1' high, 7' penetration.
From Sta 10+33 to Sta 10+37, 3' high, 4' penetration.
From Sta 10+50 to Sta 10+55, 1.5' high, 4' penetration.

At Sta 10+50 at the left side a block in the bottom course has settled 1/2" at the downstream end of the block. The settled block is above an undermined area.

CITY/TOWN	B.I.N.	BR. DEPT. NO.	8.-STRUCTURE NO.	INSPECTION DATE
LAWRENCE	**C82**	**L-04-032**	**L04032-C82-DOT-DES**	**AUG 6, 2020**

REMARKS

Item 60.2.f - Footing (Cont'd)

Right Side:
There is intermittent undermining at the right side. Undermining is due to missing stones of the leveling course.
At Sta 10+47, at the pierwall angle, undermining of the largest area measures 8' long, 1.3' high, and 3.8' penetration.

Item 60.2.h - Scour
Pier #3:
Left Side:
A leveling course consisting of stones is exposed along the left side from Sta 9+98 to the upstream nose.
Toe varies from 0 to 2'.
There is undermining at the left side. Undermining is due to missing stones of the leveling course.
The following areas of undermining were measured:
From Sta 10+12 to Sta 10+16, 1.1' high, 7' penetration.
From Sta 10+33 to Sta 10+37, 3' high, 4' penetration.
From Sta 10+50 to Sta 10+55, 1.5' high, 4' penetration.
At Sta 10+50 at the left side a block in the bottom course has settled 1/2" at the downstream end of the block. The settled block is above an undermined area.

Right Side:
There is intermittent undermining at the right side. Undermining is due to missing stones of the leveling course.
At Sta 10+47, at the pierwall angle, undermining of the largest area measures 8' long, 1.3' high, and 3.8' penetration.

Item 60.2.i - Settlement
Pier #3:
At Sta 10+50 at the left side a block in the bottom course has settled 1/2" at the downstream end of the block. The settled block is above an undermined area.

ITEM 61 - CHANNEL AND CHANNEL PROTECTION

Item 61.1 - Channel Scour
Pier #3:
Left Side:
A leveling course consisting of stones is exposed along the left side from Sta 9+98 to the upstream nose.
Toe varies from 0 to 2'.
There is undermining at the left side. Undermining is due to missing stones of the leveling course.
The following areas of undermining were measured:
From Sta 10+12 to Sta 10+16, 1.1' high, 7' penetration.
From Sta 10+33 to Sta 10+37, 3' high, 4' penetration.
From Sta 10+50 to Sta 10+55, 1.5' high, 4' penetration.
At Sta 10+50 at the left side a block in the bottom course has settled 1/2" at the downstream end of the block. The settled block is above an undermined area.

CITY/TOWN	B.I.N.	BR. DEPT. NO.	8.-STRUCTURE NO.	INSPECTION DATE
LAWRENCE	**C82**	**L-04-032**	**L04032-C82-DOT-DES**	**AUG 6, 2020**

REMARKS

Item 61.1 - Channel Scour (Cont'd)

Right Side:
There is intermittent undermining at the right side. Undermining is due to missing stones of the leveling course.
At Sta 10+47, at the pierwall angle, undermining of the largest area measures 8' long, 1.3' high, and 3.8' penetration.

Item 61.4 - Vegetation
Trees are growing at the base of the right concrete wall.
Piers #2, #3, and #5 have some vegetation growing in joints between blocks.

Sketch Log
Sketch 1 : PLAN VIEW (NTS)
Sketch 2 : PARTIAL SIDE ELEVATIONS (NTS)

CITY/TOWN	B.I.N.	BR. DEPT. NO.	8.-STRUCTURE NO.	INSPECTION DATE
LAWRENCE	C82	L-04-032	L04032-C82-DOT-DES	AUG 6, 2020

SKETCHES

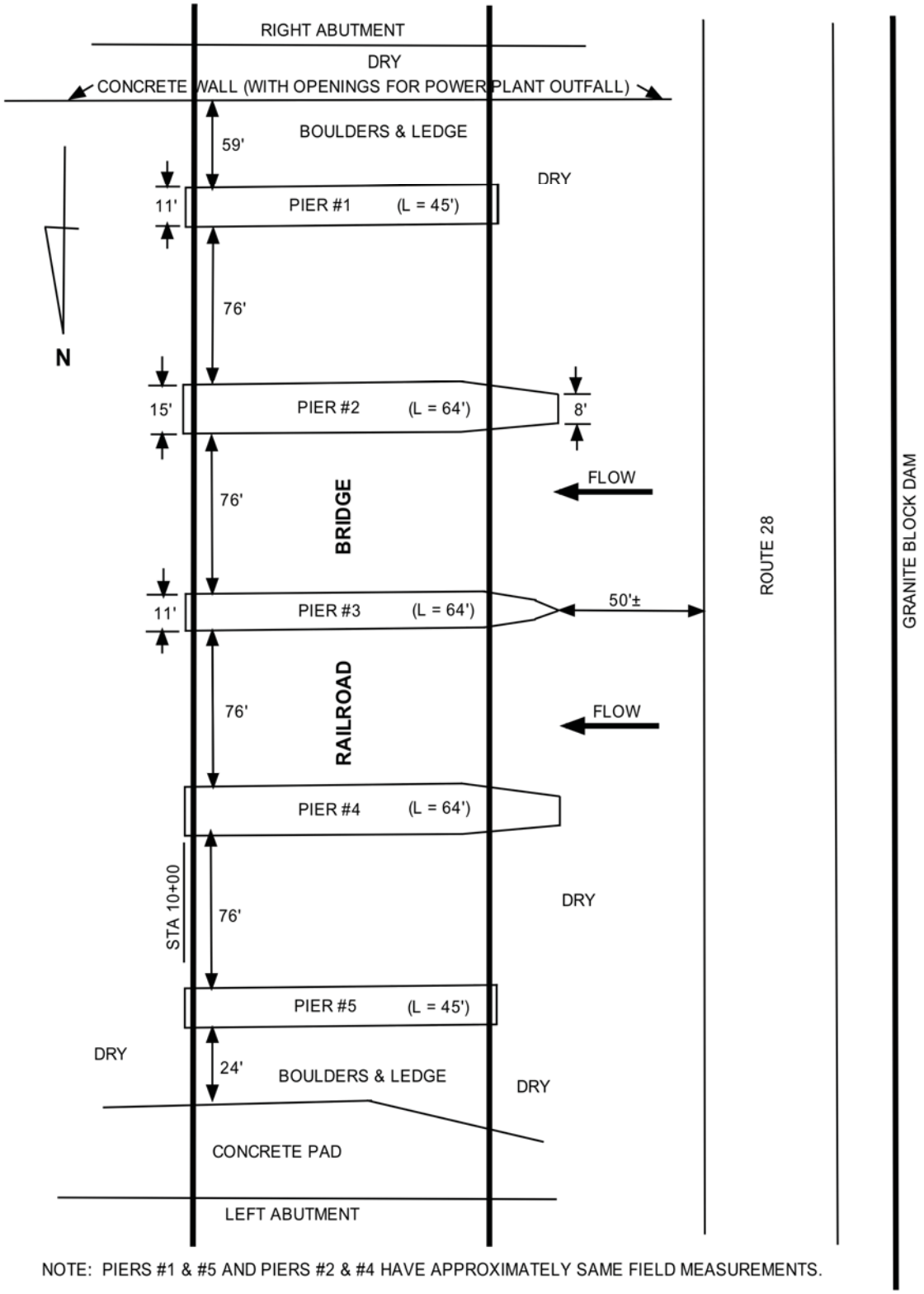

NOTE: PIERS #1 & #5 AND PIERS #2 & #4 HAVE APPROXIMATELY SAME FIELD MEASUREMENTS.

PLAN VIEW (NTS)

Sketch 1: PLAN VIEW (NTS)

REM.(2)7-96

CITY/TOWN	B.I.N.	BR. DEPT. NO.	8.-STRUCTURE NO.	INSPECTION DATE
LAWRENCE	**C82**	**L-04-032**	**L04032-C82-DOT-DES**	**AUG 6, 2020**

SKETCHES

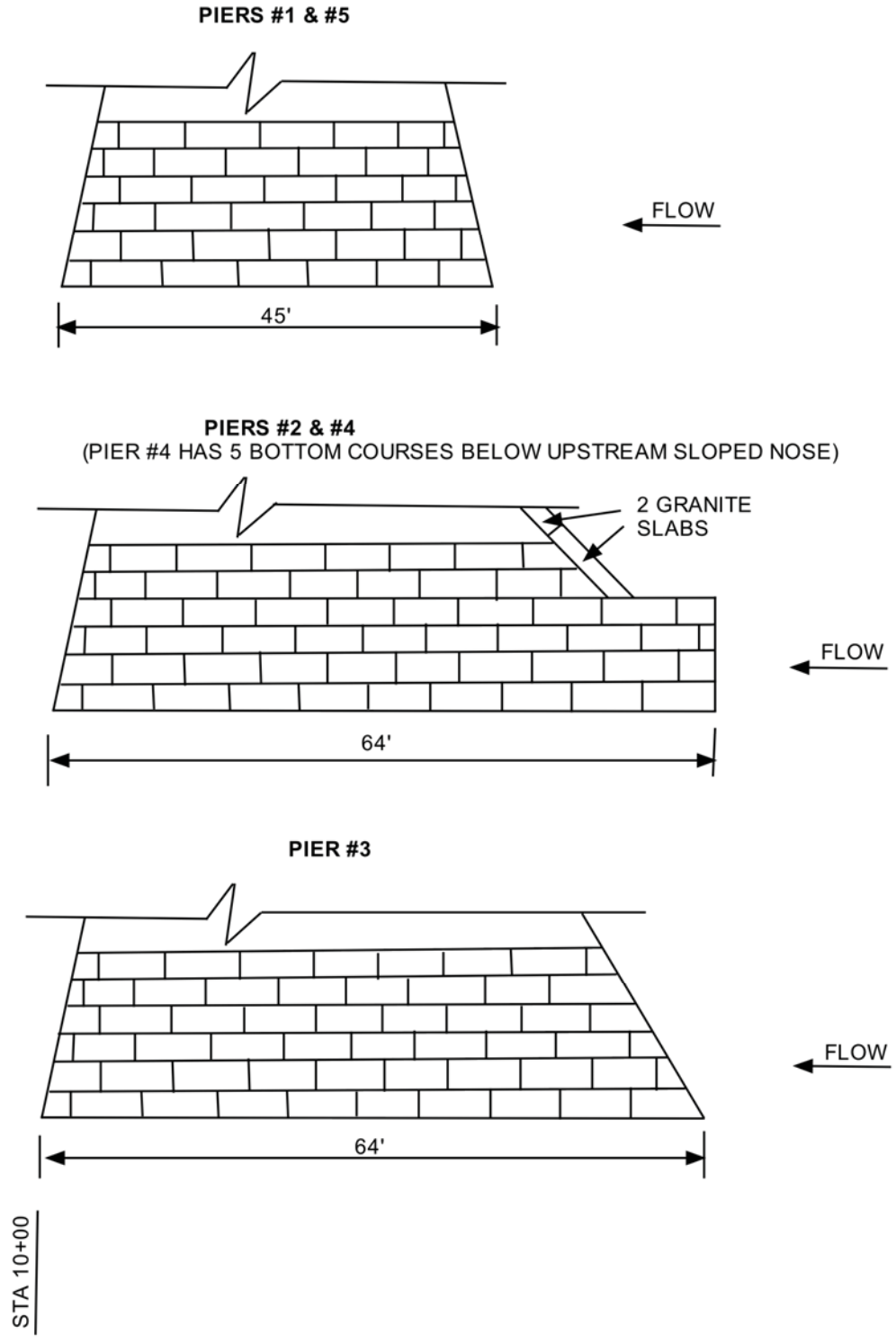

PARTIAL SIDE ELEVATIONS
(NTS)

NOTE: PIER ANGLES NOT SHOWN.

Sketch 2: PARTIAL SIDE ELEVATIONS (NTS)

Report Date: December 21, 2020

State Information

BDEPT#= L04032 Agency Br.No.

Town= Lawrence L.O.

B.I.N= C82 AASHTO= 030.0

RANK= 0 H.I.= 0 FHWA Select List= N (6/21/2017)

Identification

(8) Structure Number	L04032C82DOTDES
(5) Inventory Route	
(2) State Highway Department District	04
(3) County Code 009 (4) Place code	34550
(6) Features Intersected	**WATER MERRIMACK RIVER**
(7) Facility Carried	**RR ABANDONED RR**
(9) Location	ADJACENT TO BROADWAY BR
(11) Kilometerpoint	0000.000
(12) Base Highway Network	N
(13) LRS Inventory Route & Subroute	
(16) Latitude	42 DEG 42 MIN 04.90 SEC
(17) Longitude	71 DEG 09 MIN 54.60 SEC
(98) Border Bridge State Code	Share %
(99) Border Bridge Structure No. #	

Structure Type and Material

(43) Structure Type Main:	Code
Jointless bridge type:	Not applicable
(44) Structure Type Appr:	Code
(45) Number of spans in main unit	000
(46) Number of approach spans	0000
(107) Deck Structure Type -	Code
(108) Wearing Surface / Protective System:	
A) Type of wearing surface -	Code
B) Type of membrane -	Code
C) Type of deck protection -	Code

Age and Service

(27) Year Built	0000
(106) Year Reconstructed	0000
(42) Type of Service: On -	
Under -	Code
(28) Lanes: On Structure 00	Under structure 00
(29) Average Daily Traffic	000000
(30) Year of ADT 0000 (109) Truck ADT	00 %
(19) Bypass, detour length	000 KM

Geometric Data

(48) Length of maximum span	0000.0 M
(49) Structure Length	00000.0 M
(50) Curb or sidewalk: Left 00.0 M	Right 00.0 M
(51) Bridge Roadway Width Curb to Curb	000.0 M
(52) Deck Width Out to Out	000.0 M
(32) Approach Roadway Width (w/shoulders)	000.0 M
(33) Bridge Median -	Code
(34) Skew 00 DEG (35) Structure Flared	N
(10) Inventory Route MIN Vert Clear	00.00 M
(47) Inventory Route Total Horiz Clear	00.0 M
(53) Min Vert Clear Over Bridge Rdwy	00.00 M
(54) Min Vert Underclear ref	00.00 M
(55) Min Lat Underclear RT ref	00.0 M
(56) Min Lat Underclear LT	00.0 M

Navigation Data

(38) Navigation Control -	Code
(111) Pier Protection	Code
(39) Navigation Vertical Clearance	000.0 M
(116) Vert-lift Bridge Nav Min Vert Clear	M
(40) Navigation Horizontal Clearance	0000.0 M

Classification

	Code
(112) NBIS Bridge Length	N
(104) Highway System	N
(26) Functional Class -	
(100) Defense Highway	
(101) Parallel Structure	
(102) Direction of Traffic -	
(103) Temporary Structure	N
(105) Federal Lands Highways	
(110) Designated National Network	N
(20) Toll -	
(21) Maintain -	
(22) Owner -	
(37) Historical Significance	

Condition

	Code
(58) Deck	
(59) Superstructure	
(60) Substructure	
(61) Channel & Channel Protection	
(62) Culverts	

Load Rating and Posting

	Code
(31) Design Load -	
(63) Operating Rating Method -	
(64) Operating Rating	0
(65) Inventory Rating Method -	
(66) Inventory Rating	0
(70) Bridge Posting	0
(41) Structure -	

Appraisal

	Code
(67) Structural Evaluation	0
(68) Deck Geometry	N
(69) Underclearances, vert. and horiz.	N
(71) Waterway adequacy	
(72) Approach Roadway Alignment	
(36) Traffic Safety Features	
(113) Scour Critical Bridges	

Inspections

(90) Inspection Date 00/00/00 (91) Frequency 00 MO

(92) Critical Feature Inspection: (93) CFI DATE

(A) Fracture Critical Detail	N	00	MO A)	00/00/00
(B) Underwater Inspection	N	00	MO B)	08/06/20
(C) Other Special Inspection	N	00	MO C)	00/00/00
(*) Other Inspection ()	N	00	MO *)	00/00/00
(*) Closed Bridge	N	00	MO *)	00/00/00
(*) UW Special Inspection	N	00	MO *)	00/00/00
(*) Damage Inspection			MO *)	00/00/00

Rating Loads

Report Date 00/00/00	H20	Type 3	Type 3S2	Type HS
Operating	0.0	0.0	0.0	0.0
Inventory	0.0	0.0	0.0	0.0

Field Posting

Status Posting Date 00/00/00

	2 Axle	3 Axle	5 Axle	Single
Actual				
Recommended				

Missing Signs N

Misc.

Bridge Name

N Anti-missile fence N Acrow Panel N Jointless Bridge Freeze/Thaw

Accessibility (Needed/Used)

Liftbucket	Rigging	Other
Ladder	Staging	
Boat	Traffic Control	
Wader	RR Flagperson	Inspection Hours: 000
Inspector 50	Police	

Appendix D

Historic Structure Inventory Report

Massachusetts Cultural Resource Information System

Scanned Record Cover Page

Inventory No:	LAW.923
Historic Name:	Manchester and Lawrence Railroad Bridge
Common Name:	MBTA Survey Phase II
Address:	Merrimack River Broadway and Merrimack River
City/Town:	Lawrence
Village/Neighborhood:	Lawrence
Local No:	
Year Constructed:	1871
Architect(s):	Boston & Maine
Architectural Style(s):	Truss Pure Pratt
Use(s):	Other Rail Related; Other Transportation
Significance:	Industry; Transportation
Area(s):	
Designation(s):	
Building Materials(s):	

The Massachusetts Historical Commission (MHC) has converted this paper record to digital format as part of ongoing projects to scan records of the Inventory of Historic Assets of the Commonwealth and National Register of Historic Places nominations for Massachusetts. Efforts are ongoing and not all inventory or National Register records related to this resource may be available in digital format at this time.

The MACRIS database and scanned files are highly dynamic; new information is added daily and both database records and related scanned files may be updated as new information is incorporated into MHC files. Users should note that there may be a considerable lag time between the receipt of new or updated records by MHC and the appearance of related information in MACRIS. Users should also note that not all source materials for the MACRIS database are made available as scanned images. Users may consult the records, files and maps available in MHC's public research area at its offices at the State Archives Building, 220 Morrissey Boulevard, Boston, open M-F, 9-5.

Users of this digital material acknowledge that they have read and understood the MACRIS Information and Disclaimer (http://mhc-macris.net/macrisdisclaimer.htm)

Data available via the MACRIS web interface, and associated scanned files are for information purposes only. THE ACT OF CHECKING THIS DATABASE AND ASSOCIATED SCANNED FILES DOES NOT SUBSTITUTE FOR COMPLIANCE WITH APPLICABLE LOCAL, STATE OR FEDERAL LAWS AND REGULATIONS. IF YOU ARE REPRESENTING A DEVELOPER AND/OR A PROPOSED PROJECT THAT WILL REQUIRE A PERMIT, LICENSE OR FUNDING FROM ANY STATE OR FEDERAL AGENCY YOU MUST SUBMIT A PROJECT NOTIFICATION FORM TO MHC FOR MHC'S REVIEW AND COMMENT. You can obtain a copy of a PNF through the MHC web site (www.sec.state.ma.us/mhc) under the subject heading "MHC Forms."

Commonwealth of Massachusetts
Massachusetts Historical Commission
220 Morrissey Boulevard, Boston, Massachusetts 02125
www.sec.state.ma.us/mhc

This file was accessed on: Monday, May 1, 2017 at 12:00 PM

Law, 923

McGinley Hart & Associates
Architects & Planners
A.G. Lichtenstein & Associates
DMC Engineering
Jane Carolan

Historic Structure Inventory Form

MBTA Historical Property Survey, Phase II
MBTA Contract No. X2PS26

LOCATION

Railroad route Methuen
Location Merrimack River
USGS quad LAWRENCE

Milepost # 0.32 **Val plan #** 7.4/sl1
Town/City Lawrence
UTM Ref. 19.322620.4729720

PHYSICAL CHARACTERISTICS

Structure type Pratt deck truss
Overall length 840-0 **Width** 37-6 **Spans** 6
Tracks 2(1) **Skew** 0 **Materials** Steel & Iron

Bridge typology code 1 [1] 2 [2] 3 [1] 4 [71]
Span lengths 140-0 each **B.D./O.D.** OD
Condition In Service **Height** 18-2

HISTORICAL SUMMARY

Date 1893 **Date(s) rebuilt**
Common Name (if any)

Builder Cofrode and Saylor/Phila. Bridge Works
Designer

CULTURAL RESOURCE EVALUATIONS

National Register status
Local landmark designation
HAER Doc. # **Type and date of HAER documentation**
MDPW # **MHC finding** **Date of finding**
National Register recommendation
Eligible. The bridge is one of the oldest Pratt deck truss bridges in the state.

GRAPHICS

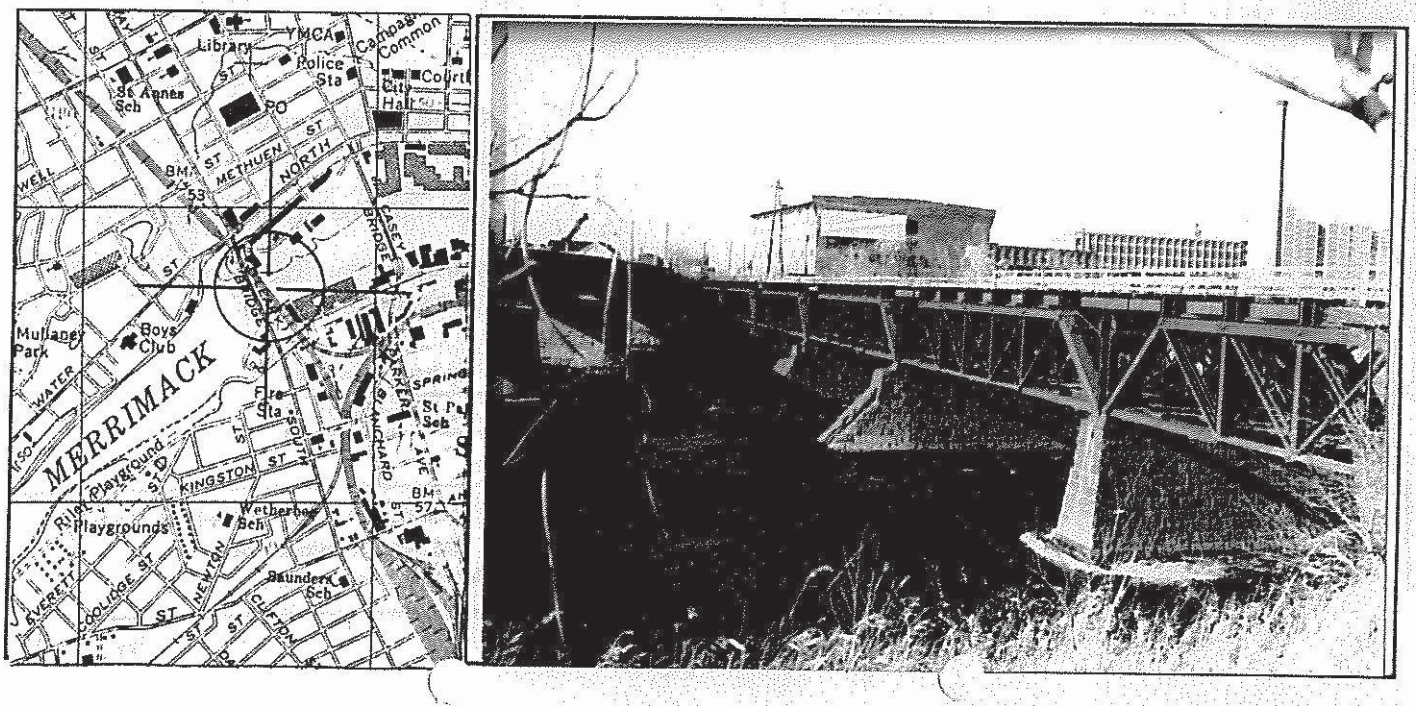

LAW.923

McGinley Hart & Associates
Architects & Planners
A.G. Lichtenstein & Associates
DMC Engineering
Jane Carolan

Historic Structure Inventory Form

MBTA Historical Property Survey, Phase II
MBTA Contract No. X2PS26

Historic railroad name Methuen Branch

HISTORY & DESCRIPTION

In 1847 the Boston and Maine Railroad presented a petition to construct a bridge across the Merrimack River in order to extend its main line to the town of Methuen, where it would be met by the Manchester & Lawrence Railroad. In 1848 the first Merrimack River Bridge was completed, allowing for the extension of the line to Methuen. The connection also gave the Manchester & Lawrence access to the B&M tracks and to Boston.

This bridge is a six-span, pin-connected Pratt deck truss, originally designed to carry two tracks, but presently carrying only one. The superstructure was fabricated by Cofrode and Saylor in 1893. In the original drawings, the upper chord and verticals are of steel, while most of the diagonals and lower chords are of wrought-iron bars, pinned in groups of six. Four 15-foot deep Pratt-truss systems, interconnected by girders and struts, support the deck. The 840-foot length makes the bridge the one of the longest in the survey.

Sources

Boston and Maine Railroad. 33 Bridge Drawings: 1893, 1938, 1964, 1974, 1983 MBTA Aperture Cards.
Harlow, A. Steelways of New England. New York, 1946.
Massachusetts Railroad Commissioners Report 1894.
Molloy, Peter M., The Lower Merrimack River Valley, An Inventory of Historic Engineering and Industrial Sites, Washington D.C.: Historic American Engineering Record, 1976.
Boston & Maine Railroad, Valuation Survey Reports for Interstate Commerce Commission. 7.4. Valuation Plan
Fieldnotes: Account #6. Boston and Maine Railroad Historical Society Archives, University of Lowell.

Surveyor Peter Stott
Survey date Sept. 1988

Reviewer PGM
Review date 12/6/88

Survey photographs
106/5A--2864.30,32,3

GLOSSARY

Val Plan:	Railroad property valuation plan.	*HAER:*	Historic American Engineering Record
USGS quad:	U.S. Geological Survey quadrangle map	*B.D./O.D.:*	Ballasted deck/open deck
UTM Ref.:	USGS map grid reference in the Universal Transverse Mercator grid system.		

rev. 10/15/87

LAW.923

In Area no.	Form no. 923 903

FORM F - STRUCTURE

MASSACHUSETTS HISTORICAL COMMISSION
Office of the Secretary, State House, Boston

2. Photo (3x3" or 3x5")
Staple to left side of form
Photo number_____

4. Map. Draw sketch of structure location in relation to nearest cross streets, buildings, other structures, natural features. Indicate north.

1. Town LAWRENCE

Address near intersection of Broadway & Merrimack River

Name Manchester & Lawrence Railroad Bridge

Present use railroad bridge

Present owner Boston & Maine Railroad

3. Type of structure (check one)

bridge	____	pound	____
canal	____	powder house	____
dam	____	street	____
fort	____	tower	____
gate	____	tunnel	____
kiln	____	wall	____
lighthouse	____	windmill	____

other railroad bridge

5. Description

Date 1871

Source _____

Construction material plate girders, wrought iron

Dimensions 20' x 840'

Setting industrial

Condition excellent

DO NOT WRITE IN THIS SPACE
USGS Quadrant_____

MHC Photo no._____

6. Recorded by Haer Inventory

Organization MHC-jmc

Date Aug., 1977

(over)

5M-5-73-075074 (Rev. 1-76)

LAW.923

7. Original owner (if known) Boston & Maine RR

Original use railroad bridge

Subsequent uses (if any) and dates

8. **Themes (check as many as applicable)**

Aboriginal		Conservation		Recreation	
Agricultural		Education		Religion	
Architectural		Exploration/ settlement		Science/ invention	
The Arts					
Commerce		Industry	x	Social/ humanitarian	
Communication		Military			
Community development	x	Political		Transportation	x

9. **Historical significance (include explanation of themes checked above)**

Contributed to the development of Lawrence as a 19th century industrial community.

10. Bibliography and/or references such as local histories, deeds, assessor's records, early maps, etc.

LAW.923

HAER INVENTORY

1. NAME OF STRUCTURE: Manchester and Lawrence Railroad Bridge
2. DATE: 1871
3. NATURE OF STRUCTURE: Railroad Bridge
4. INDUSTRIAL CLASSIFICATION: 602
5. LOCATION: STREET & NUMBER: near intersection of Broadway and Merrimack River
CITY OR TOWN: Lawrence
COUNTY: Essex
STATE: MA
6. USGS QUAD MAP & UTM GRID REF.: Lawrence 19.322620.472972
7. OWNER OF PROPERTY: Boston and Main Railroad
ADDRESS:
8. CONDITION: [X] EXCELLENT [ ] GOOD [ ] FAIR [ ] DETERIORATED [ ] RUINS [ ] UNEXPOSED [ ] ALTERED [X] ACCESSIBLE TO PUBLIC

9. DESCRIPTION & BACKGROUND HISTORY: NUMBER OF STRUCTURES; DIMENSIONS; FABRIC; STRUCTURE & FORM; SURVIVING MACHINERY, FITTINGS AND EQUIPMENT; APPROX. AREA OF SITE; ALTERATIONS; PRESENT USE; ENGINEER/ ARCHITECT/DESIGNER; IMPORTANT EVENTS & INDIVIDUALS.

This pin connected, deck, plate girder, Pratt truss railroad bridge was built by the Boston and Maine Railroad in 1871 as part of the Manchester and Lawrence line. Beyond normal repairs and replacement of track and ties, the bridge is unaltered. It consists of 6 spans, each 140 feet in length, and each with 5 panels. The upper chord and verticals are plate girders, while most of the diagonals and lower chord members are wrought iron bars, pinned together in groups of six. The bridge, which is 20 feet wide, has four Pratt truss systems, interconnected by girders and struts. The truss is shallow, being 8 feet deep. The piers are cutwater style, constructed of granite blocks with an English bond. The abutments are of the pier variety. The abutment on the north side of the river was extended about 25 feet from the shore in order to avoid skewing the trusses.

10. PHOTOGRAPHS & SKETCH MAP ON REVERSE SIDE.

11. RELATED SOURCES OF INFORMATION: HISTORICAL REFERENCES (PUBLISHED ARTICLES, MANUSCRIPTS, REPORTS, DRAWINGS, PHOTOGRAPHIC RECORDS)
CONTACTS: (NAMES & ADDRESSES OF ANYONE WITH EYE-WITNESS ACCOUNTS OR RELEVANT INFORMATION); TAPE RECORDINGS.

Boston and Maine Railroad office, Billerica, MA

12. DANGER OF DEMOLITION OR DAMAGE [ ] YES [X] NO
NATURE OF THREAT:
13. PRIORITY: 3

14. EXISTING SURVEYS AND DATES: [ ] NHL [ ] NR [ ] HAER [ ] HABS [ ] STATE [ ] COUNTY [ ] LOCAL [ ] OTHER

15. INVENTORIED BY:

YOUR NAME	ADDRESS	AFFILIATION	DATE
Peter M. Molloy	800 Mass. Ave., N. Andover, MA 01845	Merrimack Valley Textile Museum	4/76

PLEASE RETURN TO THE HISTORIC AMERICAN ENGINEERING RECORD, NATIONAL PARK SERVICE, WASHINGTON, DC 20240

A00880 - 268

Proposal No. 608930-128034

LAW.923

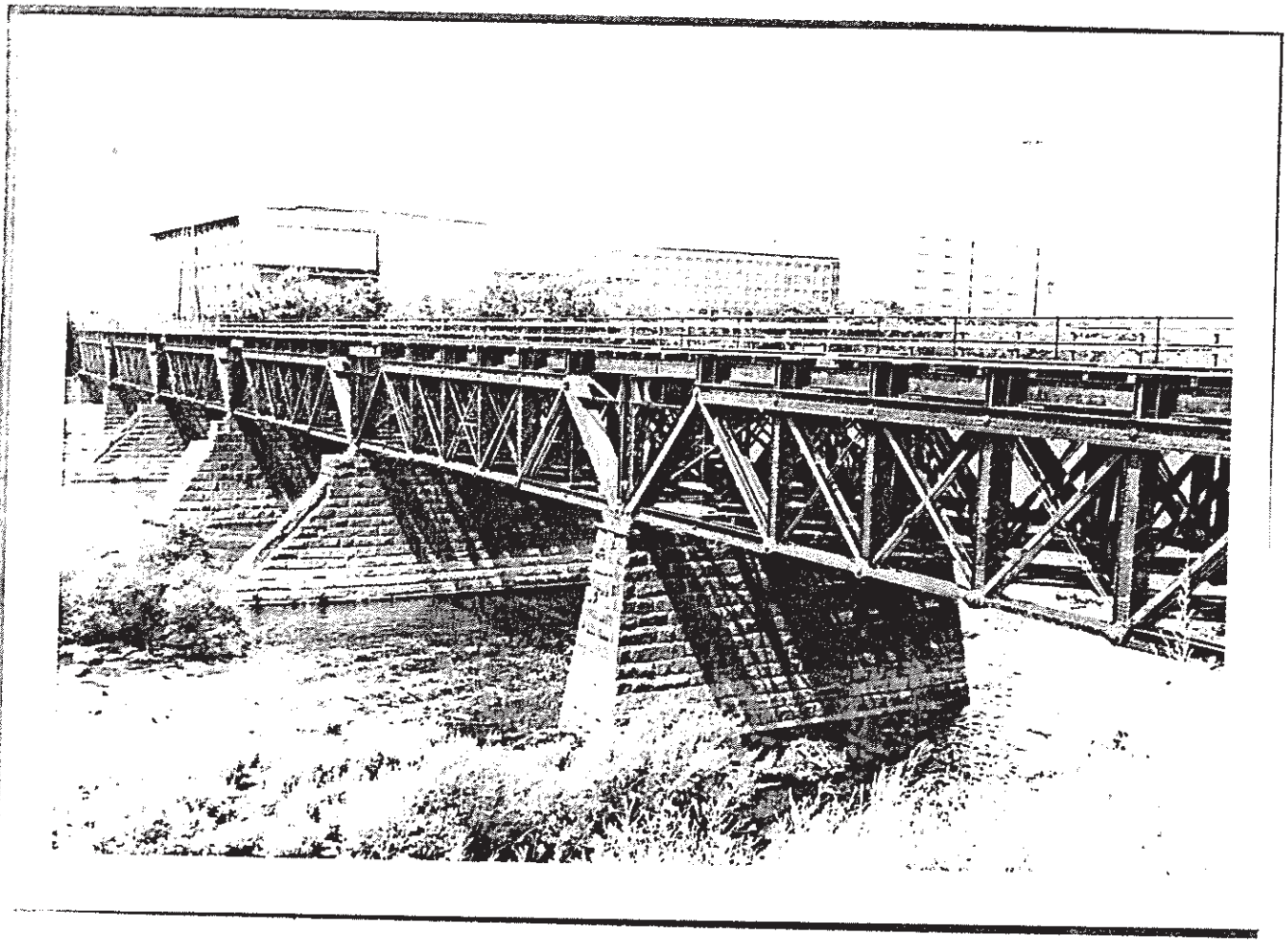

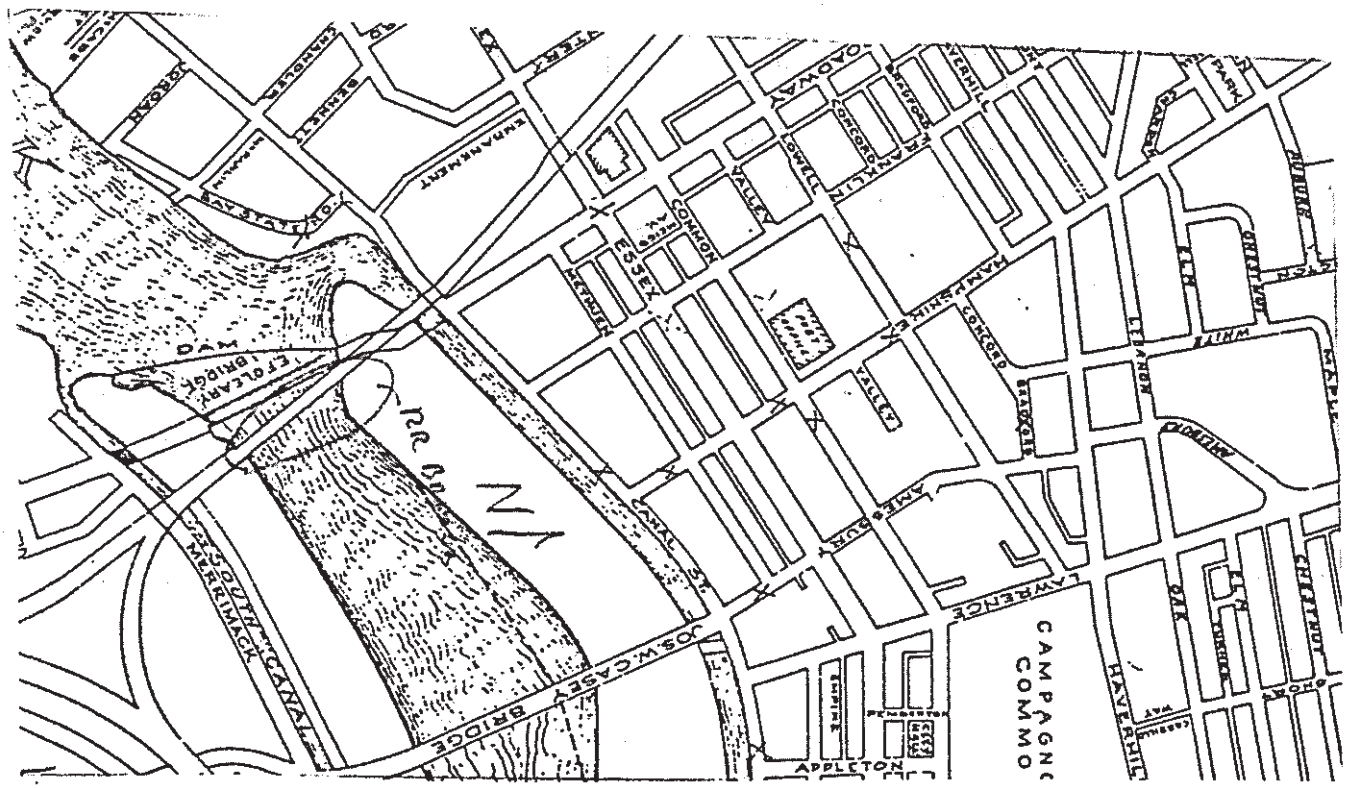
DAM
LEFTCLEARY BRIDGE
MERRIMACK CANAL
SOUTH
JOS.W.CASEY BRIDGE
CANAL ST.
ESSEX
COMMON
LAWRENCE
APPLETON
CAMPAGNO
COMMO
HAVERHILL
PARK
ENDICOTT
BERKELEY
ROGERS
TREMONT
ESSEX
LOWELL
FRANKLIN
HAMPSHIRE
BROADWAY
AMESBURY
CHESTNUT
MYRTLE
WALNUT
MAPLE
ELM

THIS PAGE IS INTENTIONALLY LEFT BLANK

146 Dascomb Road
Andover, MA 01810
978.794.1792
TheEngineeringCorp.com
Create | Design | Innovate

Job: B&M Railroad Bridge over South Canal L-04-045 (C91)

Location: Lawrence, MA

Title: Substructure Re-use Justification

Calculated By: AJC

Job Number: T0694

Date: 2/12/2021

Sheet: 0 **Of** 0

Checked By: RGN

COMMONWEALTH OF MASSACHUSETTS
ROBERT NICCOLI
CIVIL
No. 49871
PROFESSIONAL ENGINEER

The following letter will serve to discuss all assumptions and rationale used to justify the existing substructure is adequate to support the proposed loading conditions. This letter is being prepared in response to comments by MassDOT made on the previous Preliminary Structures Report (PSR) prepared by TEC, dated June 30, 2017. This letter will supplement language contained within the revised PSR and highlight results from calculations contained herein.

The existing bridge was assumed to be originally designed to support the Cooper E-series loading standards. This assumption was made based on the time frame that the bridge was constructed and what the standard Cooper E-series loading of the American Railway Engineering Association (AREA, now AREMA) was at that time. The time of construction of the bridge was determined based on information provided within the Historic Structure Inventory Report (See Appendix C). Based on this time of construction, the standard Cooper E-series loading was between a E-40 & E-50. The E-40 loading is lighter and was used herein to determine the original design loads of the bridge. Assuming this lighter loading is a conservative assumption since it will result in a smaller overall delta between the original design loading and those of the proposed rehabilitated structure.

Based on the assumption that the existing structure was designed for, and once supported Cooper E-40 loading, substructure reactions were determined, including dead load and a Cooper E-40 live load. It was calculated that this reaction would be 838 kips (see Appendix A). TEC also calculated the substructures' reactions for the proposed rehabilitated structures loads including dead load and the greater of either a small maintenance vehicle (H10) or pedestrian live load. It was calculated that this reaction would be 486 kips (see Appendix A). Therefore, the proposed rehabilitated structure's substructure will see a reaction load that is 352 kips, or 42% less load than when it carried railroad traffic.

The existing substructure has been inspected on multiple occasions by multiple parties to determine the substructure's current condition. In a Preliminary Bridge Evaluation report (dated August 2016, prepared by Hardesty & Hanover) it was stated that there was no observations that would indicate an issue with re-use. (See Appendix B). An additional visual inspection was performed by TEC in January 2017, during which the substructure appeared to be in good condition with only minor deficiencies including debris build-up and minor cracks in abutment backwall concrete.

During all previous inspections, there have been no observations that the existing substructure exhibits any sign of distress. No settlement, overturning or sliding has been observed in the existing substructure.

To summarize, the rehabilitated structure would support a reduced loading condition and is in a satisfactory condition with no observed deficiencies that would effect it's load carrying capacity. The existing substructure has been in place for over a 100-years supporting rail traffic loading and currently shows no signs of distress or scour. Based on the above assumptions and reasoning, TEC believes that the existing bridges substructure is adequate for re-use to support the proposed rehabilitated structure.

Appendix A

Substructure Reuse Calcs

CALCULATIONS

65 Glenn Street, Lawrence, MA 01843
tel 978.794.1792 | fax 978.794.1793 | www.theengineeringcorp.com

JOB: LMRC - South Canal
JOB NUMBER: T0694
LOCATION: Lawrence, MA
DATE: 2/11/21
TITLE: Substructure Evaluation
SHEET: 1 OF 4
CALCULATED BY: KRF / AJC
CHECKED BY: AJS

Ref

Substructure Loads

Proposed:

Dead Load:

			Ref
Girders = 4 (276 plf)	= 1104 plf		Superstructure calcs ↓
1.5 Girder weight (Bracing)	= 41.4 plf		
Concrete deck = (8/12)(150 pcf)(22.5')	= 2250 plf		
Pavers = (.140 psf)(19.25')	= 2695 plf		
Hand rails = 2(150 plf)	= 300 plf		
	Σ = 6391 plf		

6391 plf (66.25') = 423,404 lb
= 424 k

424 k / 2 abutments = 212 k / abutment

Live Load:

Pedestrian = 90 psf
= 90 psf (66.25')(20.5')
= 122,232 lb
= 123 kip / 2 abutments
= 62 kip / abutment — AASHTO 3.1

H-10 vehicle = 16 k / wheel
16(2) = 24 k / abutment — AASHTO Figure 3.2-1

65 Glenn Street, Lawrence, MA 01843
tel 978.794.1792 | fax 978.794.1793 | www.theengineeringcorp.com

CALCULATIONS

JOB: LMRC - South Canal
LOCATION: Lawrence, MA
TITLE: Substructure Evaluation
CALCULATED BY: KRF / AJC

JOB NUMBER: T0694
DATE: 2/11/21
SHEET: 2 OF 4
CHECKED BY: AJS

Existing:

Cooper E-40 Live Loading
→ Use ratio of Cooper E-80 & Span Length/ train length

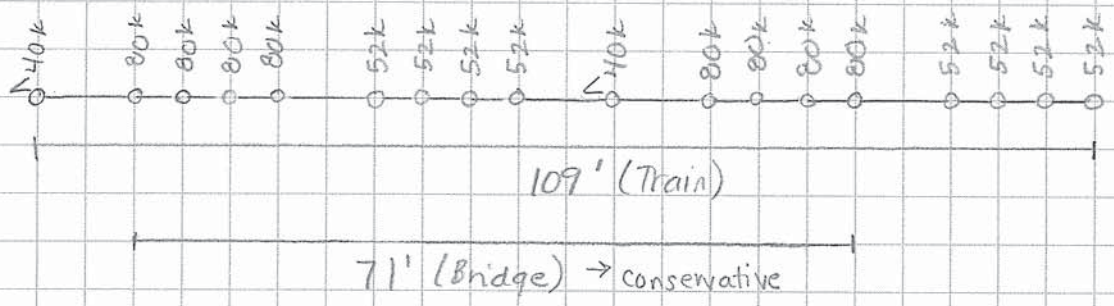

Cooper E-80 Load

Total Load = 888 kip (within bridge span)

Span L = 66.25'

For cooper E-40 = 888 k $\left(\frac{40}{80}\right)$ = 444 kip

Per abutment = 444 k / 2 = 222 kip

2 railroad tracks being supported by substructure

222 k (2) = 444 kip / abutment

TEC The Engineering Corp

WWW.THEENGINEERINGCORP.COM

CALCULATIONS

JOB: LMRC - South Canal
LOCATION: Lawrence, MA
TITLE: Substructure Evaluation
CALCULATED BY: AJC

JOB NUMBER: T0694
DATE: 2/12/21
SHEET: 3 OF 4
CHECKED BY: -

Existing Superstructure DL:

Timber decking - 8" thick x 15' = $\left(\frac{8''}{12}\right)(19.5')(65.25')(40\,pcf) = 33.9^{k}$

Timber curb = $2\left(\frac{8''}{12}\right)\left(\frac{4''}{12}\right)(65.25')(40\,pcf) = 0.6^{k}$

Timber Railing = $2(4)\left(\frac{2''}{12}\right)\left(\frac{4''}{12}\right)(65.25')(40\,pcf) = 1.2^{k}$
↳ assume roughly 4 2x4's full length

Steel Rails = $2(125\,plf)(65.25') = 16.3^{k}$

Girders = $4(276\,plf)(65.25') = 72.1^{k}$

Bracing (1.5 Girder wt) = $1.5(276\,plf)(65.25') = 270^{k}$

Total DL = $33.9^{k} + 0.6^{k} + 1.2^{k} + 16.3^{k} + 72.1^{k} + 270^{k}$

$= 394.1^{k}$

TEC The Engineering Corp

WWW.THEENGINEERINGCORP.COM

CALCULATIONS

JOB: LMRC - South Canal
JOB NUMBER: T0684
LOCATION: Lawrence, MA
DATE: 2/12/21
TITLE: Substructure Evaluation
SHEET: 4 OF 4
CALCULATED BY: KRF / AJC
CHECKED BY: AJS

Reuse of substructure - Load Analysis

Span length = 66.25 ft

proposed deck width = 32.5 ft

Existing deck width = 19.5 ft

Pedestrian load = 90 psf

original Design Loads:

Cooper E-40	= 444 kips
DL	= 394 kips
total	= 838 kips

proposed Design Loads:

pedestrian	= 62 k
DL	= 424 k
total	= 486 kips

$486^{k} << 838^{k}$

∴ original design loads are significantly more than proposed design loads

146 Dascomb Road
Andover, MA 01810
978.794.1792
TheEngineeringCorp.com
Create | Design | Innovate

Job: LMRC Rail Trail over South Canal
Location: Lawrence, MA
Title: Abutment Seismic Check
Calculated By: AJC

Job Number: 608930
Date: 2/11/2021
Sheet: 1 of 2
Checked By: -

Design References:

1. MassDOT LRFD Bridge Manual 2020, Part I (B/M).
2. AASHTO Guide Specifications for LRFD Seismic Bridge Design (GS)
3. Geotechnical Engineering Report Dated February 2019 prepared by TRC (Geotech).

General Notes

The following calculation will serve to check all seismic requirements of the existing abutments and determine the earthquake load to be applied to the abutment design. All seismic design shall be in accordance with the AASHTO Guide Specifications for LRFD Seismic Bridge Design, 2nd Ed. (GS) per B/M 3.1.1.1. Per GS 3.5,, 4.5 & 4.6 single bridges & bridges in SDC A shall only be checked for minimum detailing requirements for support length and the connection design force.

General Input

$L=$	62.80	ft	Span length of bridge
$H=$	13.50	ft	Height of abutment
$S=$	3.0	deg	Skew anlge of bridge
$w_{seat}=$	12.0	in	Width of bearing seat (Existing Bridge Plans)
$H_o=$	13.50	ft	Clear height of abutment
$\triangle B_{o_T}=$	22.5	ft	Abutment length, used for displacement in transverse direction
$\triangle B_{o_L}=$	5.00	ft	Abutment width, used for displacement in longitudinal direction
$x_T=$	1.67		Ratio of DB_{o_T} / H_o
$x_L=$	0.37		Ratio of DB_{o_L} / H_o

146 Dascomb Road
Andover, MA 01810
978.794.1792
TheEngineeringCorp.com
Create | Design | Innovate

Job: LMRC Rail Trail over South Canal
Location: Lawrence, MA
Title: Abutment Seismic Check
Calculated By: AJC

Job Number: 608930
Date: 2/11/2021
Sheet: 2 of 2
Checked By: -

Check Local Displacement Capacity (B/M - 3.4.1.5 –> GS - 4.8.1)

Due to the structure being single span without any bents, this check is not applicable.

Check Design Requirements (B/M - Fig. 3.4.3-1 –> GS - 4.6)

*A geotech report would be required in order to determine this force. Assume this is OK since the bridge is a pedestrian bridge and seismic analysis & design is not required.

Check Minimum Support Length (B/M - Fig. 3.4.3-1 –> GS - 4.12)

N=	10.3	in	Minimum support length measured normal to C.L. of brg. (GS - Eq. 4.12.2-1)
%N=	100%		Percentage N by SDC and A_s (GS - Table 4.12.2-1)
$N_{req'd.}$=	10.3	in	Support length required, corrected for %N
$N_{req'd_Check}$=	OK		Check if $N_{req'd.} \leq w_{seat}$

Appendix B

Preliminary Bridge Evaluation

Prepared August 24, 2016 by Hardesty & Hanover, LLP

Manchester Lawrence Rail Corridor EPA Brownfield Area-Wide Plan

PRELIMINARY BRIDGE EVALUATION

August 24, 2016

Prepared for:

Prepared by:

Hardesty & Hanover
engineering that moves you

60 K Street, 4th Floor
Boston, Massachusetts 02127

LAWRENCE MLRC BRIDGE CONSIDERATIONS

GENERAL INFORMATION:

There are four bridge crossings along the MLRC of concern that formerly carried railway operations. The limited plans we have are dated 1895. The general condition of the structures is adequate for rehabilitation for pedestrian or maintenance vehicle traffic. The structures were designed for freight traffic. All structures will require a thorough inspection and measurement of the substructure and superstructure as part of a rehabilitation effort. No current or past inspection reports have been located. Complete plan sets for the bridges are not available for most locations. Costs for inspection of the three smaller bridges would be about $12,000. The Merrimack River Bridge inspection would be approximately $10,000 to $20,000 depending on the level required by MassDOT.

Each bridge structure will be discussed separately as follows:

B & M RR over MANCHESTER ST:

The Manchester Street Bridge is a 62'-0" long two-track thru-girder structure with a center girder and two outside girders. The track remains on one side only. The plate girder structure has limited vertical clearance over Manchester Street and shows signs of being hit. There is a punched hole in the web about 14"x36". This damage can be repaired with little cost. The general condition of the three girder structure, as well as the large granite block abutments, is good.

The City may want to investigate increasing the vertical clearance over Merrimack Street. Raising the existing structure is feasible but ramp structures will be needed to get this added clearance. We have included a General Plan and Transverse and Longitudinal Sections showing the bridge lifted approximately 4'-6" to allow 14'-6" vertical clearance. Ramps at each end extend down to existing rail level at a 5% slope. Slopes will extend approximately 100 ft. on each end of the bridge. Alternatively, a new bridge superstructure could be used such as a prefabricated truss structure.

EXISTING RETAINING WALL NORTH OF MANCHESTER ST BETWEEN TRACKS:

Between the two tracks, running parallel an existing knee high concrete retaining wall is in poor condition. It has tilted several inches from tree roots and general inadequate footings. During any removal of trees or the rails and ties this wall may be removed and the area re-graded.

B & M RR over NORTH CANAL:

The North Canal Bridge is an approximately 100 ft. long single track supported on a parallel multi-girder steel structure with track and ties in place. The ties are in poor condition. The structure is over the outfall of a dam structure parallel to the track. From the track surface a minor visual inspection did not indicate an issue with re-use. The substructure could not be observed; however, the masonry work for the adjacent structures was very robust.

B & M RR over MERRIMACK RIVER:

The Merrimack River crossing is a two-track wide (rails for one track) six-span approximately 540 ft. long deck over truss structure. The bottom chord consists of forged eye-bar tension members and pin connections. The substructure is granite faced masonry piers and abutments likely resting on bedrock. The general condition of the superstructure and substructure is very good from a visual observation.

B & M RR over SOUTH CANAL BRIDGE:

The South Canal Bridge is a 65 ft. two-track configuration over a parallel multi-girder steel superstructure with a single-track and ties in place. The ties are in poor condition. The structure is over the South Canal. From the track surface and side of structure a minor visual inspection did not indicate an issue with re-use. The substructure could not be fully be observed however the masonry work for the adjacent canal walls was intact.

PROPOSED MULTI-USE STRUCTURES ON BRIDGES:

Decking Options:

For pedestrian, bicycle and small maintenance UTV traffic a timber or fiberglass grating deck structure may be used. If larger maintenance and emergency vehicles will require access then a concrete deck is recommended. Wood types include native and exotic species such as IPE or cumuru tropical hardwoods and treated southern pine (not recommended) or native black locust. For vehicular access, longevity and ease of maintenance a concrete deck is shown in the typical section.

Rail types include timber, galvanized painted steel or a combination of both materials. If timber decking is used then the decking will span transversely for safety with bicycles and strollers and wheelchairs. All decking shall be ADA compliant.

Construction Cost:

At this early stage of design, costs for the addition of a concrete deck and rails will be computed using $150/SF for the concrete or timber deck and $240/FT for the rail.

Removal of the existing rails and ties is not included here as this can vary depending if salvage value is included. Track and tie removal will be part of the larger project and not included in the bridge cost. See the attached sheet for costs of each bridge.

TOWN:	LAWRENCE			CLASS:	0
STATION:		ROAD:	MLRC	OVER:	VARIES
TYPE:	STEEL STRINGER	ROADWAY:	VARIES	SIDEWALKS:	
SPANS:	VARIES	LENGTH:	VARIES	VERTICAL CL.:	VARIES

ORDER OF MAGNITUDE BRIDGE ESTIMATE

ITEM	QUANTITY	UNITS	DESCRIPTION	UNIT PRICE	AMOUNT
995.1	893	SF	BRIDGE STRUCTURE - MANCHESTER STREET	$150	$133,997
995.2	1360	SF	BRIDGE STRUCTURE - NORTH CANAL	$150	$203,999
995.3	8000	SF	BRIDGE STRUCTURE - MERRIMACK RIVER	$150	$1,199,970
995.4	867	SF	BRIDGE STRUCTURE - SOUTH CANAL	$150	$130,000
995.6	1668	LF	BRIDGE RAIL	$220	$366,960
106.30	1	LS	STEEL REPAIRS	$300,000	$300,000

Bridge Item Total: **$2,340,000**

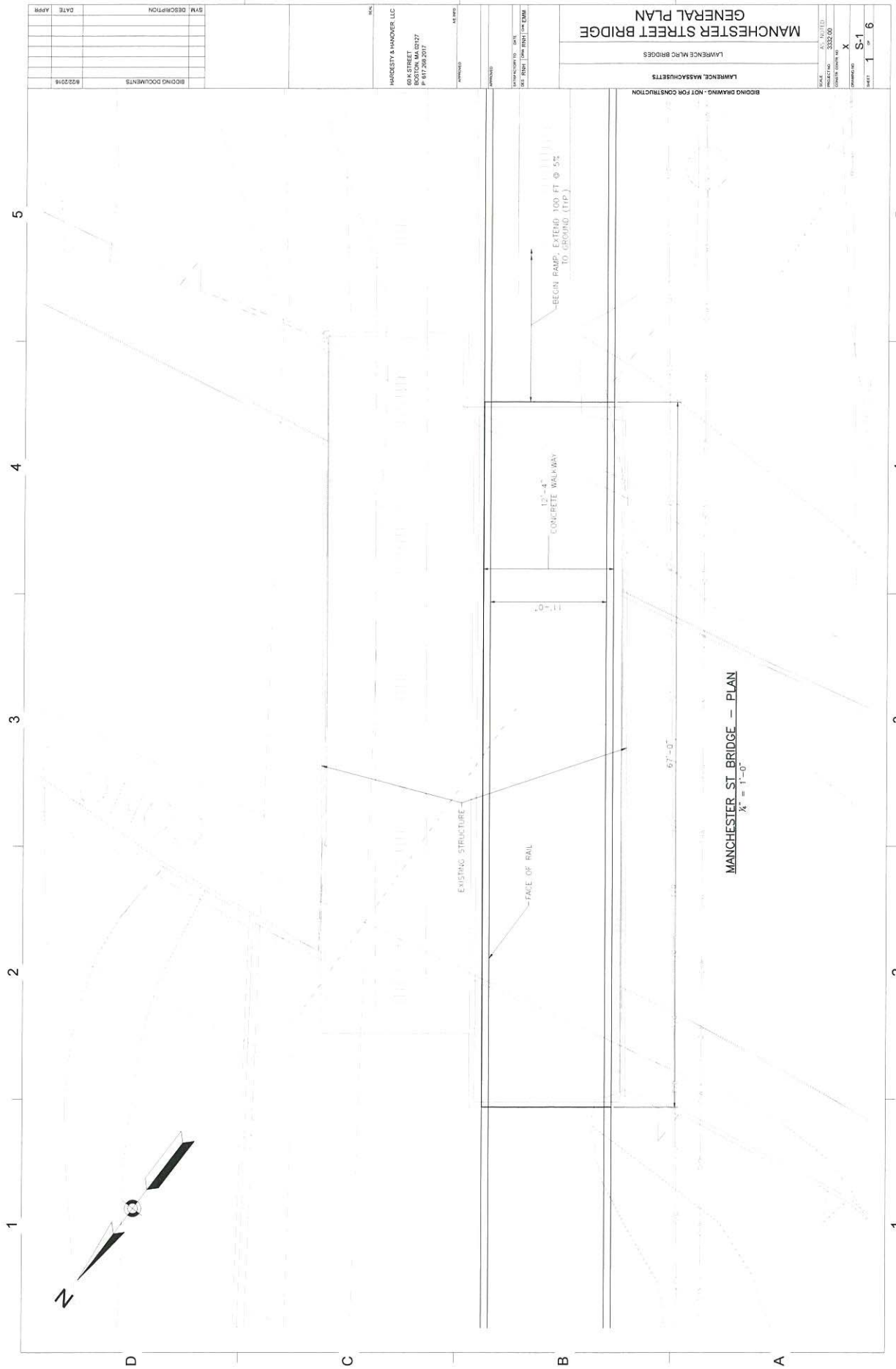
MANCHESTER STREET BRIDGE
GENERAL PLAN
LAWRENCE, MASSACHUSETTS
LAWRENCE MLRC BRIDGES
BIDDING DRAWING - NOT FOR CONSTRUCTION
HARDESTY & HANOVER, LLC
60A STREET
BOSTON, MA 02127
P 617.268.2017
BIDDING DOCUMENTS
8/22/2016
DESCRIPTION
DATE
APPR
SYM
S-1
1 OF 6
AS NOTED
3332.00
BEGIN RAMP, EXTEND 100 FT @ 5%
TO GROUND (TYP.)
12'-4"
CONCRETE WALK-WAY
5'-0"
67'-0"
EXISTING STRUCTURE
FACE OF RAIL
MANCHESTER ST BRIDGE – PLAN
¼" = 1'-0"
N

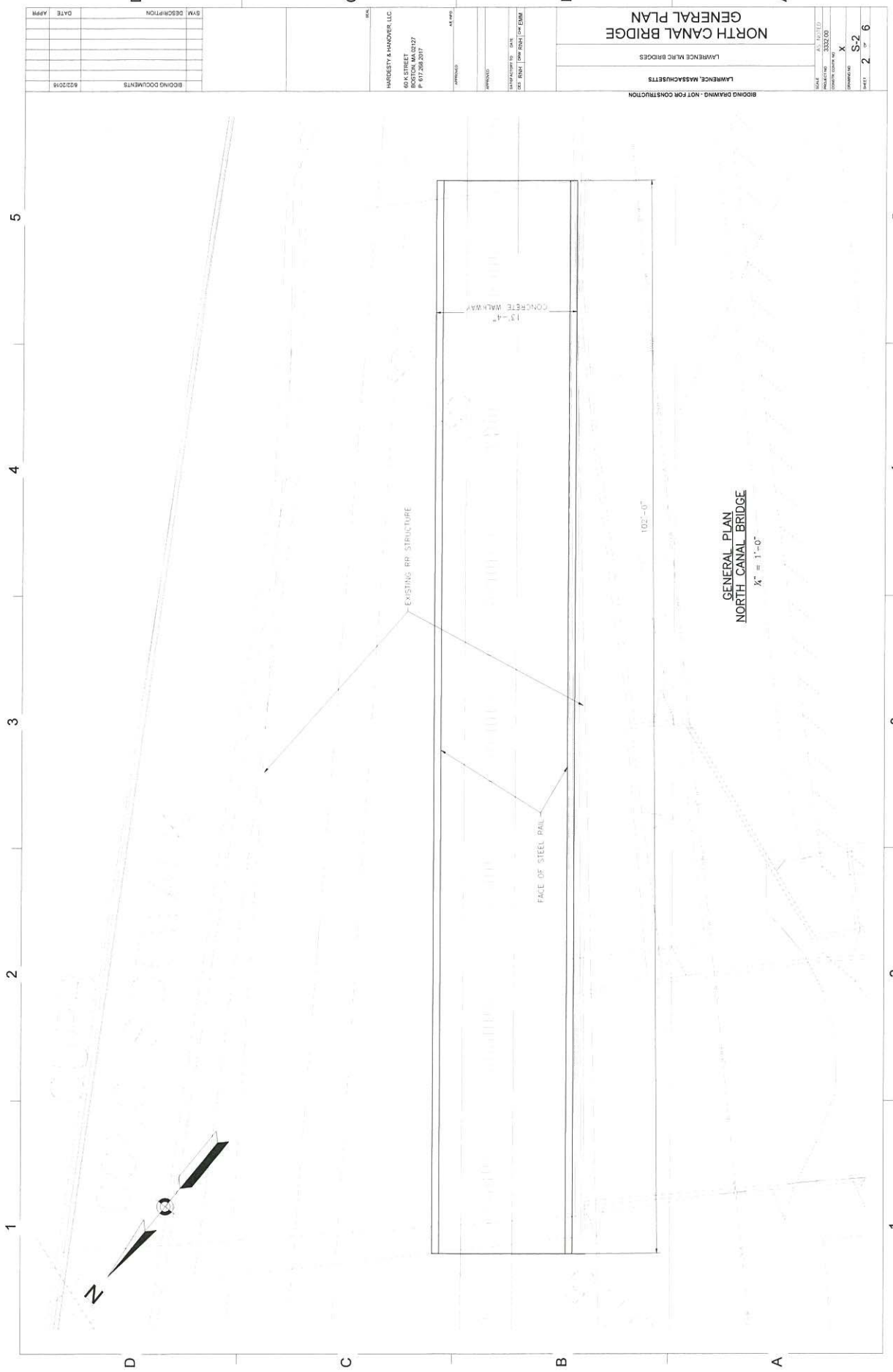
BIDDING DRAWING - NOT FOR CONSTRUCTION
LAWRENCE, MASSACHUSETTS
LAWRENCE MLRC BRIDGES
NORTH CANAL BRIDGE
GENERAL PLAN
BIDDING DOCUMENTS 6/22/2018
HARGESTY & HANOVER, LLC
60 K STREET
BOSTON, MA 02127
P: 617.268.2917
CONCRETE WALKWAY
13'-4"
EXISTING RR STRUCTURE
102'-0"
FACE OF STEEL RAIL
GENERAL PLAN
NORTH CANAL BRIDGE
1/4" = 1'-0"
N

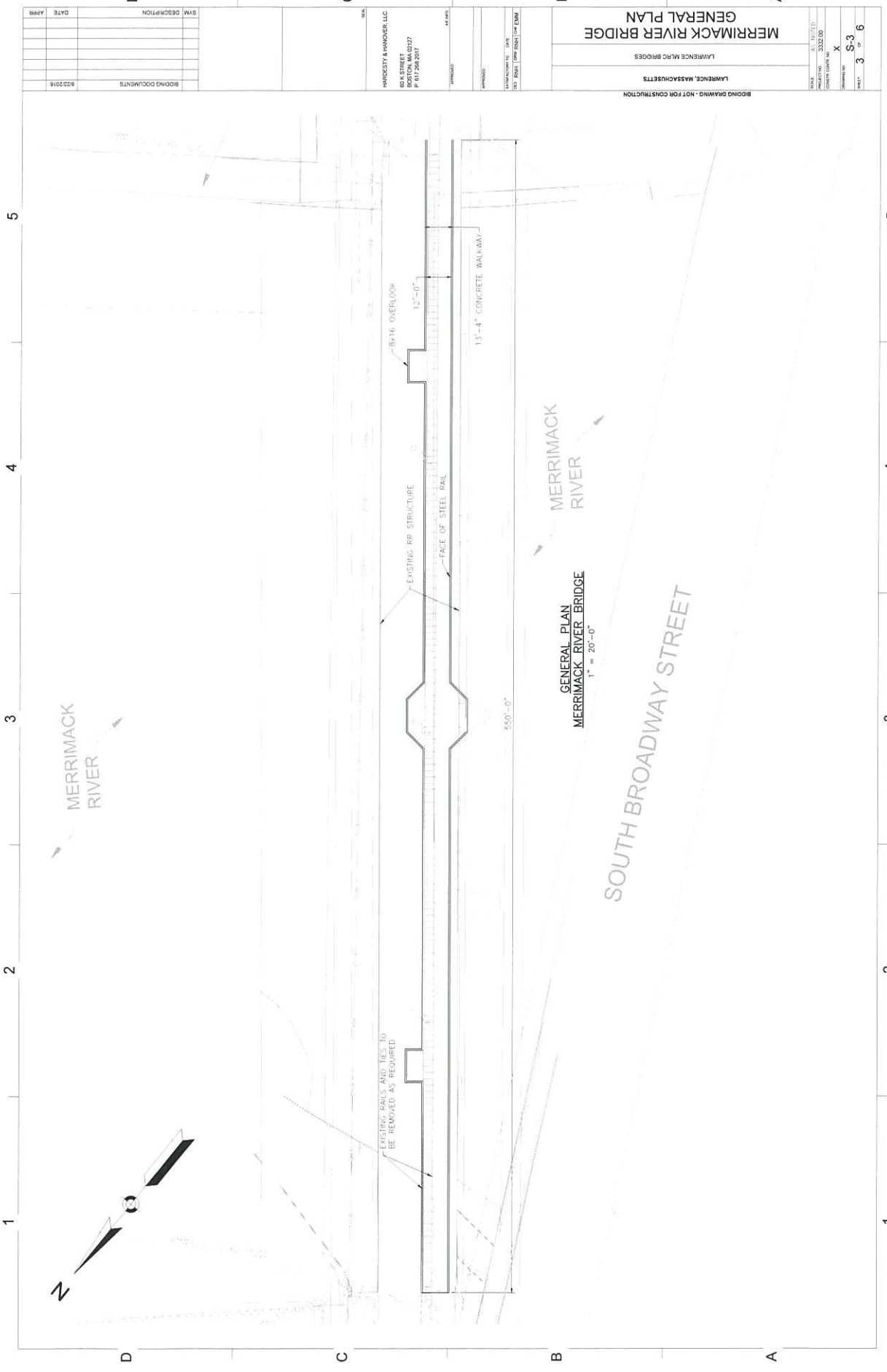
MERRIMACK RIVER BRIDGE
GENERAL PLAN
LAWRENCE, MASSACHUSETTS
LAWRENCE MLRC BRIDGES
BIDDING DRAWING - NOT FOR CONSTRUCTION
HARDESTY & HANOVER, LLC
60 K STREET
BOSTON, MA 02127
P 617.208.2917
BIDDING DOCUMENTS
6/22/2016
GENERAL PLAN
MERRIMACK RIVER BRIDGE
1" = 20'-0"
MERRIMACK RIVER
MERRIMACK RIVER
SOUTH BROADWAY STREET
EXISTING RR STRUCTURE
FACE OF STEEL RAIL
8'x16' OVERLOOK
12'-0"
11'-4" CONCRETE WALKWAY
550'-0"
EXISTING RAILS AND TIES TO BE REMOVED AS REQUIRED
N

BIDDING DRAWING - NOT FOR CONSTRUCTION
LAWRENCE, MASSACHUSETTS
LAWRENCE MLRC BRIDGES
SOUTH CANAL BRIDGE
GENERAL PLAN
SCALE: AS NOTED
PROJECT NO: 3332.00
DRAWING NO: S-4
SHEET 4 OF 6
HARDESTY & HANOVER, LLC
650 E STREET
BOSTON, MA 02127
P: 617.268.2017
SEAL
APPROVED
DRAWN
CHKD
SET: RNH
DES: RNH
DRW: EMM
DESCRIPTION
DATE
APPR
BIDDING DOCUMENTS
6/22/2016
CONCRETE WALKWAY
13'-4"
12'-10"
64'-6"
EXISTING RR STRUCTURE
FACE OF STEEL RAIL
GENERAL PLAN
SOUTH CANAL BRIDGE
¼" = 1'-0"
N

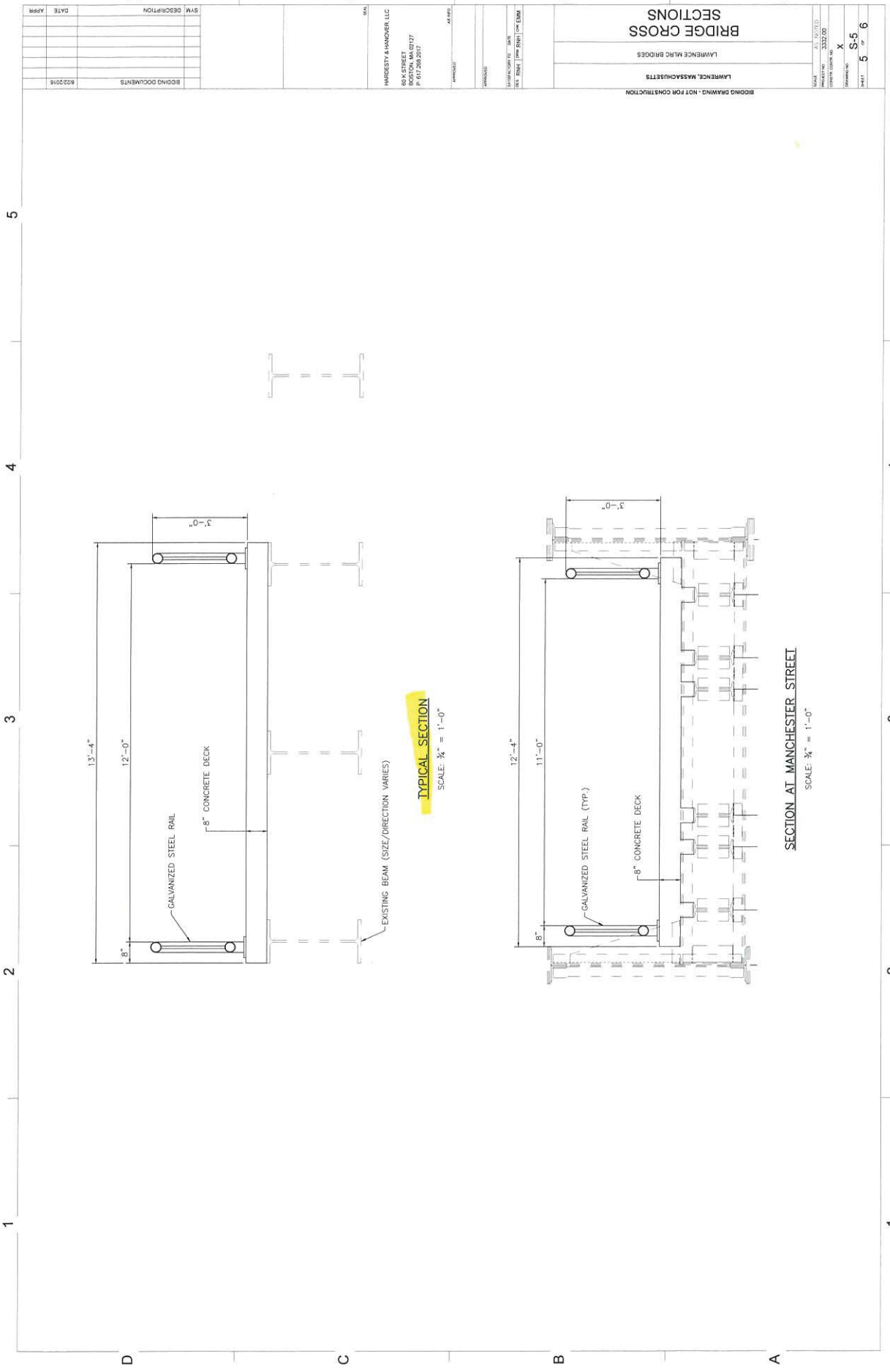
BRIDGE CROSS SECTIONS
LAWRENCE MLRC BRIDGES
LAWRENCE, MASSACHUSETTS
BIDDING DRAWING - NOT FOR CONSTRUCTION
HARDESTY & HANOVER, LLC
60 K STREET
BOSTON, MA 02127
P: 617.268.2017
BIDDING DOCUMENTS
6/22/2016
S-5
3'-0"
13'-4"
12'-0"
8" CONCRETE DECK
GALVANIZED STEEL RAIL
8"
EXISTING BEAM (SIZE/DIRECTION VARIES)
TYPICAL SECTION
SCALE: 3/4" = 1'-0"
12'-4"
11'-0"
GALVANIZED STEEL RAIL (TYP.)
SECTION AT MANCHESTER STREET
SCALE: 3/4" = 1'-0"

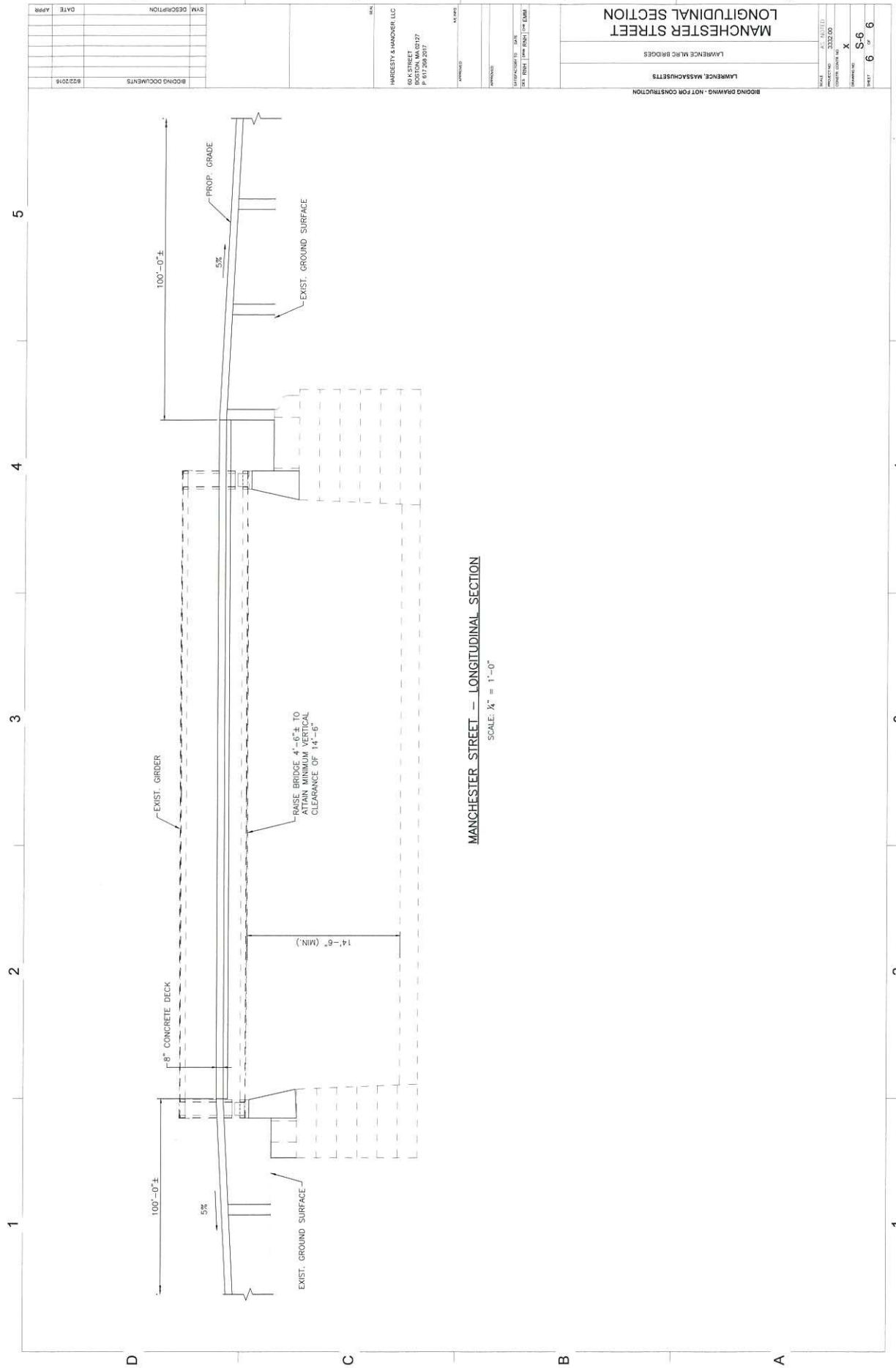
BIDDING DRAWING - NOT FOR CONSTRUCTION
LAWRENCE, MASSACHUSETTS
LAWRENCE MLRC BRIDGES
MANCHESTER STREET
LONGITUDINAL SECTION
HARDESTY & HANOVER, LLC
60 K STREET
BOSTON, MA 02127
P. 617.268.2017
BIDDING DOCUMENTS 8/22/2016
PROP. GRADE
EXIST. GROUND SURFACE
100'-0"±
5%
EXIST. GIRDER
RAISE BRIDGE 4'-6"± TO ATTAIN MINIMUM VERTICAL CLEARANCE OF 14'-6"
14'-6" (MIN.)
8" CONCRETE DECK
MANCHESTER STREET — LONGITUDINAL SECTION
SCALE: 1/4" = 1'-0"

Appendix C

Historic Structure Inventory Report

Massachusetts Cultural Resource Information System

Scanned Record Cover Page

Inventory No:	LAW.927
Historic Name:	Boston and Maine South Canal Railroad Bridge
Common Name:	MBTA Survey Phase II
Address:	South Canal
City/Town:	Lawrence
Village/Neighborhood:	South Lawrence
Local No:	
Year Constructed:	1907
Architect(s):	New England Structur
Architectural Style(s):	Plate Girder
Use(s):	Other Rail Related; Other Transportation
Significance:	Engineering; Transportation
Area(s):	
Designation(s):	
Building Materials(s):	

The Massachusetts Historical Commission (MHC) has converted this paper record to digital format as part of ongoing projects to scan records of the Inventory of Historic Assets of the Commonwealth and National Register of Historic Places nominations for Massachusetts. Efforts are ongoing and not all inventory or National Register records related to this resource may be available in digital format at this time.

The MACRIS database and scanned files are highly dynamic; new information is added daily and both database records and related scanned files may be updated as new information is incorporated into MHC files. Users should note that there may be a considerable lag time between the receipt of new or updated records by MHC and the appearance of related information in MACRIS. Users should also note that not all source materials for the MACRIS database are made available as scanned images. Users may consult the records, files and maps available in MHC's public research area at its offices at the State Archives Building, 220 Morrissey Boulevard, Boston, open M-F, 9-5.

Users of this digital material acknowledge that they have read and understood the MACRIS Information and Disclaimer (http://mhc-macris.net/macrisdisclaimer.htm)

Data available via the MACRIS web interface, and associated scanned files are for information purposes only. THE ACT OF CHECKING THIS DATABASE AND ASSOCIATED SCANNED FILES DOES NOT SUBSTITUTE FOR COMPLIANCE WITH APPLICABLE LOCAL, STATE OR FEDERAL LAWS AND REGULATIONS. IF YOU ARE REPRESENTING A DEVELOPER AND/OR A PROPOSED PROJECT THAT WILL REQUIRE A PERMIT, LICENSE OR FUNDING FROM ANY STATE OR FEDERAL AGENCY YOU MUST SUBMIT A PROJECT NOTIFICATION FORM TO MHC FOR MHC'S REVIEW AND COMMENT. You can obtain a copy of a PNF through the MHC web site (www.sec.state.ma.us/mhc) under the subject heading "MHC Forms."

Commonwealth of Massachusetts
Massachusetts Historical Commission
220 Morrissey Boulevard, Boston, Massachusetts 02125
www.sec.state.ma.us/mhc

This file was accessed on: Tuesday, June 13, 2017 at 12:14 PM

LHW,927
PD-S, Lawrence

McGinley Hart & Associates
Architects & Planners
A.G. Lichtenstein & Associates
DMC Engineering
Jane Carolan

Historic Structure Inventory Form

MBTA Historical Property Survey, Phase II
MBTA Contract No. X2PS26

LOCATION

Railroad route Methuen
Location South Canal
USGS quad LAWRENCE

Milepost # 0.25 **Val plan #** 7.4/sl1
Town/City Lawrence
UTM Ref. 19.322780.4729570

PHYSICAL CHARACTERISTICS

Structure type Deck plate girder
Overall length 66-0 **Width** **Spans** 1
Tracks 2 **Skew** 0 **Materials** Steel

Bridge typology code 1 [1] 2 [2] 3 [1] 4 [10]
Span lengths 60-0 **B.D./O.D.** BD
Condition In Service **Height** 21-6

HISTORICAL SUMMARY

Date 1907 **Date(s) rebuilt** 1927
Common Name (if any)

Builder New England Structural Co., Everett, MA.
Designer

CULTURAL RESOURCE EVALUATIONS

National Register status
Local landmark designation
HAER Doc. # **Type and date of HAER documentation**
MDPW # **MHC finding** **Date of finding**
National Register recommendation

Not eligible. Although surviving fundamentally unaltered, this bridge is representative of a common type and is not historically distinctive.

GRAPHICS

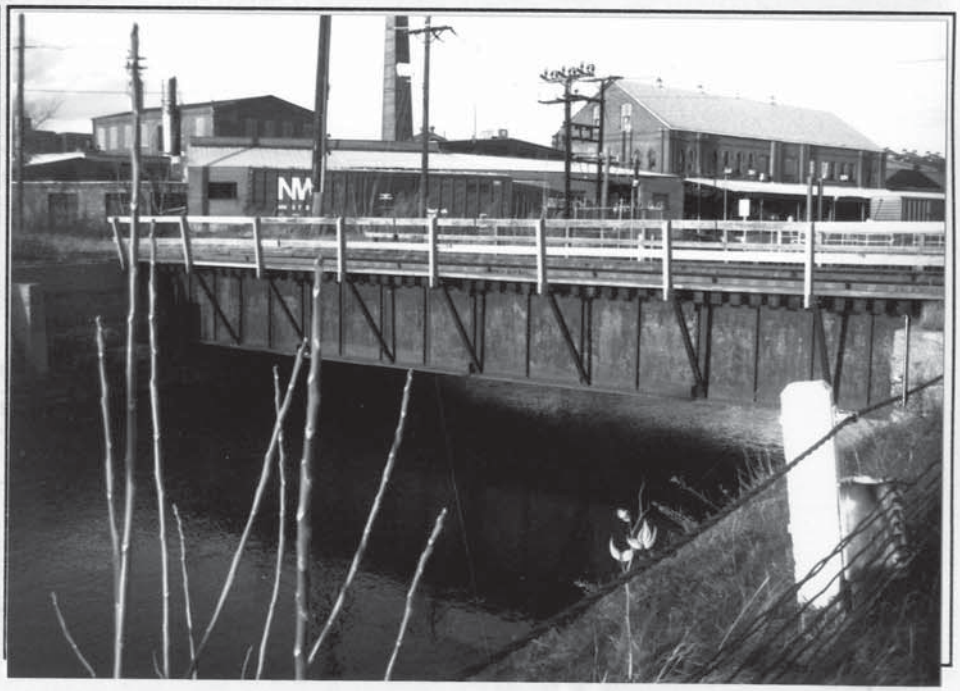

LAW.927

McGinley Hart & Associates
Architects & Planners
A.G. Lichtenstein & Associates
DMC Engineering
Jane Carolan

Historic Structure Inventory Form

MBTA Historical Property Survey, Phase II
MBTA Contract No. X2PS26

Historic railroad name Methuen Branch

HISTORY & DESCRIPTION

In 1847 the Boston and Maine Railroad presented a petition to construct a bridge across the Merrimack River in order to extend its main line to the town of Methuen, where it would be met by the Manchester & Lawrence Railroad. In 1848 the first Merrimack River Bridge was completed, allowing for the extension of the line to Methuen. The connection also gave the Manchester & Lawrence access to the B&M tracks and to Boston.

The deck plate girder bridge was built as a four-track span in 1907 by the New England Structural Company, according to the Interstate Commerce Commission (ICC) reports from 1915-17. The north span was removed and scraped in 1944. The present northernmost track was new in 1927 or 1929. Only one track is currently in use.

Sources

Boston and Maine Railroad. Five Bridge Drawings: 1907, 1919 MBTA Aperture Cards.
Boston & Maine Railroad, Valuation Survey Reports for Interstate Commerce Commission. V 7.4. Valuation Plan Fieldnotes: Account #6. Boston and Maine Railroad Historical Society Archives, University of Lowell.

Surveyor P. K. Lazrus
Survey date 11/1987

Reviewer AGL
Review date 11/23/87

Survey photographs
13/23,24--2864.29,34

GLOSSARY

Val Plan:	Railroad property valuation plan.	*HAER:*	Historic American Engineering Record
USGS quad:	U.S. Geological Survey quadrangle map	*B.D./O.D.:*	Ballasted deck/open deck
UTM Ref.:	USGS map grid reference in the Universal Transverse Mercator grid system.		

rev. 10/15/87

THIS PAGE IS INTENTIONALLY LEFT BLANK

DOCUMENT B00420

PROPOSAL

LAWRENCE

For: **Lawrence Manchester Rail Corridor (LMRC) Rail Trail**

COMMONWEALTH OF MASSACHUSETTS

LOCATION

The work referred to herein is in the City of LAWRENCE in Essex County, in the Commonwealth of Massachusetts, and is shown by the locus map (Document 00331) in the Proposal Pamphlet, the work locations extend as follows:

Lawrence Manchester Rail Corridor (LMRC) Rail Trail

Beginning – Station 0+70.00 +/-
Ending –Station 88+45.00 +/-

The contract prices shall include the furnishing of all materials (except as otherwise herein specified), the performing of all the labor requisite or proper, the providing of all necessary machinery, tools, apparatus and other means of construction, the doing of all the abovementioned work in the manner set forth, described and shown in the specifications and on the drawings for the work, and in the form of contract, and the completion thereof within **1063 CALENDAR DAYS** upon receipt of a Notice to Proceed, except that if the completion date falls between December 1 and March 15 then the same number of days beyond December 1st will be extended after March 15th.

The Work of this project is described by the following Items and quantities.

THIS PAGE INTENTIONALLY LEFT BLANK

Project # 608930	Contract # 128034			
Location : LAWRENCE				
Description : Lawrence Manchester Rail Corridor (LMRC) Rail Trail				
ITEM #	**QUANTITY**	**ITEM WITH UNIT BID PRICE WRITTEN IN WORDS**	**UNIT PRICE**	**AMOUNT**
100.	1	SCHEDULE OF OPERATIONS - FIXED PRICE $115000 AT One Hundred Fifteen Thousand Dollars LUMP SUM	$115,000.00	$115,000.00
100.91	1	PRE - POST CONSTRUCTION SURVEY AND VIBRATION MONITORING - BRIDGE L-04-027 (C90) AT _____ LUMP SUM		
101.	1	CLEARING AND GRUBBING AT _____ PER ACRE		
102.01	1	SELECTIVE CLEARING AND GRUBBING AT _____ LUMP SUM		
102.1	2,750	TREE TRIMMING AT _____ PER FOOT		
102.3	40	HERBICIDE TREATMENT OF INVASIVE PLANTS AT _____ PER HOUR		
102.33	16	INVASIVE PLANT MANAGEMENT STRATEGY AT _____ PER HOUR		
102.511	7	TREE PROTECTION - ARMORING AND PRUNING AT _____ EACH		
102.513	6	AIR EXCAVATION AND ROOT PRUNING AT _____ EACH		

Project # 608930	Contract # 128034			
Location : LAWRENCE				
Description : Lawrence Manchester Rail Corridor (LMRC) Rail Trail				
ITEM #	**QUANTITY**	**ITEM WITH UNIT BID PRICE WRITTEN IN WORDS**	**UNIT PRICE**	**AMOUNT**
102.522	300	TREE AND PLANT PROTECTION FENCE - CHAIN LINK AT _____ PER FOOT		
102.531	60	TREE CARE - PRUNING AT _____ EACH		
102.533	52,000	TREE CARE - WATERING AT _____ PER GALLON		
102.55	40	ARBORIST AT _____ PER HOUR		
103.	27	TREE REMOVED - DIAMETER UNDER 24 INCHES AT _____ EACH		
104.	3	TREE REMOVED - DIAMETER 24 INCHES AND OVER AT _____ EACH		
107.971	4,500	STRUCTURAL STEEL REPAIRS, BRIDGE NO. L-04-032 (C82) AT _____ PER POUND		
107.972	1,000	STRUCTURAL STEEL REPAIRS, BRIDGE NO. L-04-045 (C91) AT _____ PER POUND		
107.98	15	FOUNDATION AND WALL SURFACE REPAIR AT _____ PER SQUARE FOOT		

Project # 608930	Contract # 128034			
Location : LAWRENCE				
Description : Lawrence Manchester Rail Corridor (LMRC) Rail Trail				
ITEM #	**QUANTITY**	**ITEM WITH UNIT BID PRICE WRITTEN IN WORDS**	**UNIT PRICE**	**AMOUNT**
114.11	1	PARTIAL DEMOLITION OF SUPERSTRUCTURE OF BRIDGE NO. L-04-032 (C82) AT _____ LUMP SUM		
114.12	1	PARTIAL DEMOLITION OF SUPERSTRUCTURE OF BRIDGE NO. L-04-045 (C91) AT _____ LUMP SUM		
115.1	1	DEMOLITION OF BRIDGE NO. L-04-027 (C90) AT _____ LUMP SUM		
120.	7,250	EARTH EXCAVATION AT _____ PER CUBIC YARD		
121.	650	CLASS A ROCK EXCAVATION AT _____ PER CUBIC YARD		
129.5	11,600	TRACK EXCAVATION AT _____ PER FOOT		
140.	650	BRIDGE EXCAVATION AT _____ PER CUBIC YARD		
141.	350	CLASS A TRENCH EXCAVATION AT _____ PER CUBIC YARD		
141.1	75	TEST PIT FOR EXPLORATION AT _____ PER CUBIC YARD		

Project # 608930	Contract # 128034			
Location : LAWRENCE				
Description : Lawrence Manchester Rail Corridor (LMRC) Rail Trail				
ITEM #	**QUANTITY**	**ITEM WITH UNIT BID PRICE WRITTEN IN WORDS**	**UNIT PRICE**	**AMOUNT**
142.	125	CLASS B TRENCH EXCAVATION AT _____ PER CUBIC YARD		
144.	35	CLASS B ROCK EXCAVATION AT _____ PER CUBIC YARD		
145.	1	DRAINAGE STRUCTURE ABANDONED AT _____ EACH		
146.	8	DRAINAGE STRUCTURE REMOVED AT _____ EACH		
150.	3,500	ORDINARY BORROW AT _____ PER CUBIC YARD		
151.	7,700	GRAVEL BORROW AT _____ PER CUBIC YARD		
151.2	1,400	GRAVEL BORROW FOR BACKFILLING STRUCTURES AND PIPES AT _____ PER CUBIC YARD		
153.	10	CONTROLLED DENSITY FILL - EXCAVATABLE AT _____ PER CUBIC YARD		
154.	50	SAND BORROW AT _____ PER CUBIC YARD		

Project # 608930 Contract # 128034				
Location : LAWRENCE				
Description : Lawrence Manchester Rail Corridor (LMRC) Rail Trail				
ITEM #	**QUANTITY**	**ITEM WITH UNIT BID PRICE WRITTEN IN WORDS**	**UNIT PRICE**	**AMOUNT**
156.	50	CRUSHED STONE AT _____ PER TON		
156.01	100	CRUSHED STONE FOR MAINTENANCE STRIP AT _____ PER TON		
156.1	145	CRUSHED STONE FOR BRIDGE FOUNDATIONS AT _____ PER TON		
156.21	100	DUMPED RIPRAP - 50 LB STONE AT _____ PER TON		
170.	13,500	FINE GRADING AND COMPACTING - SUBGRADE AREA AT _____ PER SQUARE YARD		
180.01	1	ENVIRONMENTAL HEALTH AND SAFETY PROGRAM AT _____ LUMP SUM		
180.02	60	PERSONAL PROTECTION LEVEL C UPGRADE AT _____ PER HOUR		
180.03	2,800	LICENSED SITE PROFESSIONAL SERVICES AT _____ PER HOUR		
181.11	1,550	DISPOSAL OF UNREGULATED SOIL AT _____ PER TON		

Project # 608930	Contract # 128034			
Location : LAWRENCE				
Description : Lawrence Manchester Rail Corridor (LMRC) Rail Trail				
ITEM #	**QUANTITY**	**ITEM WITH UNIT BID PRICE WRITTEN IN WORDS**	**UNIT PRICE**	**AMOUNT**
181.12	5,200	DISPOSAL OF REGULATED SOIL - IN-STATE FACILITY AT _____ PER TON		
181.13	925	DISPOSAL OF REGULATED SOIL - OUT-OF-STATE FACILITY AT _____ PER TON		
181.14	50	DISPOSAL OF HAZARDOUS WASTE AT _____ PER TON		
181.15	50	DISPOSAL OF MEDICAL OR BIOLOGIC WASTE AT _____ PER TON		
182.1	1	INSPECTION AND TESTING FOR ASBESTOS AT _____ LUMP SUM		
182.2	70	REMOVAL OF ASBESTOS AT _____ PER FOOT		
184.1	800	DISPOSAL OF TREATED WOOD PRODUCTS AT _____ PER TON		
201.	4	CATCH BASIN AT _____ EACH		
202.	3	MANHOLE AT _____ EACH		

Project # 608930 Contract # 128034				
Location : LAWRENCE				
Description : Lawrence Manchester Rail Corridor (LMRC) Rail Trail				
ITEM #	**QUANTITY**	**ITEM WITH UNIT BID PRICE WRITTEN IN WORDS**	**UNIT PRICE**	**AMOUNT**
203.12	2	STORMWATER BASIN OUTLET STRUCTURE AT _____ EACH		
220.	4	DRAINAGE STRUCTURE ADJUSTED AT _____ EACH		
220.3	1	DRAINAGE STRUCTURE CHANGE IN TYPE AT _____ EACH		
220.5	2	DRAINAGE STRUCTURE REMODELED AT _____ EACH		
220.7	2	SANITARY STRUCTURE ADJUSTED AT _____ EACH		
222.3	5	FRAME AND GRATE (OR COVER) MUNICIPAL STANDARD AT _____ EACH		
222.31	1	BEEHIVE GRATE AT _____ EACH		
223.1	4	FRAME AND GRATE (OR COVER) REMOVED AND STACKED AT _____ EACH		
224.12	2	12 INCH HOOD AT _____ EACH		

Project # 608930 Contract # 128034				
Location : LAWRENCE				
Description : Lawrence Manchester Rail Corridor (LMRC) Rail Trail				
ITEM #	**QUANTITY**	**ITEM WITH UNIT BID PRICE WRITTEN IN WORDS**	**UNIT PRICE**	**AMOUNT**
227.3	10	REMOVAL OF DRAINAGE STRUCTURE SEDIMENT AT _____ PER CUBIC YARD		
227.31	100	REMOVAL OF DRAINAGE PIPE SEDIMENT AT _____ PER FOOT		
234.12	60	12 INCH DRAINAGE PIPE - OPTION AT _____ PER FOOT		
235.12	4	12 INCH DRAINAGE PIPE FLARED END - OPTION AT _____ EACH		
238.12	20	12 INCH DUCTILE IRON PIPE AT _____ PER FOOT		
243.12	525	12 INCH REINFORCED CONCRETE PIPE CLASS IV AT _____ PER FOOT		
252.12	40	12 INCH CORRUGATED PLASTIC PIPE AT _____ PER FOOT		
258.	45	STONE FOR PIPE ENDS AT _____ PER SQUARE YARD		
269.06	800	6 INCH SLOT-PERFORATED CORRUGATED PLASTIC PIPE (SUBDRAIN) AT _____ PER FOOT		

Project # 608930 Contract # 128034				
Location : LAWRENCE				
Description : Lawrence Manchester Rail Corridor (LMRC) Rail Trail				
ITEM #	**QUANTITY**	**ITEM WITH UNIT BID PRICE WRITTEN IN WORDS**	**UNIT PRICE**	**AMOUNT**
281.3	20	GROUTED STONE PAVING (WATERWAYS) AT _____ PER SQUARE YARD		
303.08	240	8 INCH DUCTILE IRON WATER PIPE (MECHANICAL JOINT) AT _____ PER FOOT		
309.	800	DUCTILE IRON FITTINGS FOR WATER PIPE AT _____ PER POUND		
347.1	50	1 INCH COPPER TUBING TYPE K AT _____ PER FOOT		
350.08	2	8 INCH GATE AND GATE BOX AT _____ EACH		
357.06	1	6 INCH GATE BOX AT _____ EACH		
357.08	2	8 INCH GATE BOX AT _____ EACH		
358.	8	GATE BOX ADJUSTED AT _____ EACH		
373.08	130	8 INCH WATER PIPE INSULATION AT _____ PER FOOT		

Project # 608930 Contract # 128034				
Location : LAWRENCE				
Description : Lawrence Manchester Rail Corridor (LMRC) Rail Trail				
ITEM #	**QUANTITY**	**ITEM WITH UNIT BID PRICE WRITTEN IN WORDS**	**UNIT PRICE**	**AMOUNT**
376.5	1	HYDRANT - ADJUSTED AT _____ EACH		
381.3	3	SERVICE BOX ADJUSTED AT _____ EACH		
402.1	170	DENSE GRADED CRUSHED STONE FOR SUB-BASE AT _____ PER TON		
415.2	2,100	PAVEMENT FINE MILLING AT _____ PER SQUARE YARD		
440.	34,000	CALCIUM CHLORIDE FOR ROADWAY DUST CONTROL AT _____ PER POUND		
443.	125	WATER FOR ROADWAY DUST CONTROL AT _____ PER 1000 GALLONS		
450.22	925	SUPERPAVE SURFACE COURSE – 9.5 (SSC – 9.5) AT _____ PER TON		
450.221	275	SUPERPAVE SURFACE COURSE - 9.5 POLYMER (SSC - 9.5 - P) AT _____ PER TON		
450.31	1,550	SUPERPAVE INTERMEDIATE COURSE - 12.5 (SIC -12.5) AT _____ PER TON		

Project # 608930 Contract # 128034				
Location : LAWRENCE				
Description : Lawrence Manchester Rail Corridor (LMRC) Rail Trail				
ITEM #	**QUANTITY**	**ITEM WITH UNIT BID PRICE WRITTEN IN WORDS**	**UNIT PRICE**	**AMOUNT**
450.32	50	SUPERPAVE INTERMEDIATE COURSE - 19.0 (SIC - 19.0) AT _____ PER TON		
450.42	275	SUPERPAVE BASE COURSE - 37.5 (SBC - 37.5) AT _____ PER TON		
450.52	10	SUPERPAVE LEVELING COURSE - 9.5 (SLC - 9.5) AT _____ PER TON		
450.60	80	SUPERPAVE BRIDGE SURFACE COURSE - 9.5 (SSC-B - 9.5) AT _____ PER TON		
450.71	120	SUPERPAVE BRIDGE PROTECTIVE COURSE - 12.5 (SPC-B - 12.5) AT _____ PER TON		
451.	85	HMA FOR PATCHING AT _____ PER TON		
452.	1,350	ASPHALT EMULSION FOR TACK COAT AT _____ PER GALLON		
453.	3,500	HMA JOINT ADHESIVE AT _____ PER FOOT		
458.71	40	LIGHTWEIGHT AGGREGATE FILL AT _____ PER CUBIC YARD		

Project # 608930 Contract # 128034				
Location : LAWRENCE				
Description : Lawrence Manchester Rail Corridor (LMRC) Rail Trail				
ITEM #	**QUANTITY**	**ITEM WITH UNIT BID PRICE WRITTEN IN WORDS**	**UNIT PRICE**	**AMOUNT**
472.	55	TEMPORARY ASPHALT PATCHING AT _____ PER TON		
504.	825	GRANITE CURB TYPE VA4 - STRAIGHT AT _____ PER FOOT		
504.1	185	GRANITE CURB TYPE VA4 - CURVED AT _____ PER FOOT		
509.	250	GRANITE TRANSITION CURB FOR PEDESTRIAN CURB RAMPS - STRAIGHT AT _____ PER FOOT		
509.1	25	GRANITE TRANSITION CURB FOR PEDESTRIAN CURB RAMPS - CURVED AT _____ PER FOOT		
516.	3	GRANITE CURB CORNER TYPE A AT _____ EACH		
570.2	315	HOT MIX ASPHALT CURB TYPE 2 AT _____ PER FOOT		
580.	215	CURB REMOVED AND RESET AT _____ PER FOOT		
638.22	560	VERTICAL WELDED WIRE SCREEN FENCE (PIPE TOP RAIL) AT _____ PER FOOT		

Project # 608930 Contract # 128034				
Location : LAWRENCE				
Description : Lawrence Manchester Rail Corridor (LMRC) Rail Trail				
ITEM #	**QUANTITY**	**ITEM WITH UNIT BID PRICE WRITTEN IN WORDS**	**UNIT PRICE**	**AMOUNT**
645.048	120	48 INCH CHAIN LINK FENCE (PIPE TOP RAIL) (LINE POST OPTION) AT _____ PER FOOT		
645.172	450	72 INCH CHAIN LINK FENCE (PIPE TOP RAIL) VINYL COATED (LINE POST OPTION) AT _____ PER FOOT		
655.3	3,400	WOODEN SAFETY RAIL AT _____ PER FOOT		
655.4	500	WOOD RAIL FENCE WITH GUARDRAIL AT _____ PER FOOT		
657.	425	TEMPORARY FENCE AT _____ PER FOOT		
657.5	175	TEMPORARY FENCE REMOVED AND RESET AT _____ PER FOOT		
665.	3,750	CHAIN LINK FENCE REMOVED AND STACKED AT _____ PER FOOT		
666.	150	CHAIN LINK FENCE REMOVED AND RESET AT _____ PER FOOT		
669.	515	FENCE REMOVED AND STACKED AT _____ PER FOOT		

Project # 608930 Contract # 128034				
Location : LAWRENCE				
Description : Lawrence Manchester Rail Corridor (LMRC) Rail Trail				
ITEM #	**QUANTITY**	**ITEM WITH UNIT BID PRICE WRITTEN IN WORDS**	**UNIT PRICE**	**AMOUNT**
670.	75	FENCE REMOVED AND RESET AT _____ PER FOOT		
671.	1	FENCE GATE AND GATE POSTS REMOVED AND STACKED AT _____ EACH		
685.	75	STONE MASONRY WALL IN CEMENT MORTAR AT _____ PER CUBIC YARD		
690.01	650	REPOINTING MORTAR JOINTS AT _____ PER FOOT		
697.	6,250	SEDIMENTATION FENCE AT _____ PER FOOT		
697.1	21	SILT SACK AT _____ EACH		
698.1	225	GEOTEXTILE FABRIC FOR STABILIZATION AT _____ PER SQUARE YARD		
698.3	7,400	GEOTEXTILE FABRIC FOR SEPARATION AT _____ PER SQUARE YARD		
701.	1,400	CEMENT CONCRETE SIDEWALK AT _____ PER SQUARE YARD		

Project # 608930	Contract # 128034			
Location : LAWRENCE				
Description : Lawrence Manchester Rail Corridor (LMRC) Rail Trail				
ITEM #	**QUANTITY**	**ITEM WITH UNIT BID PRICE WRITTEN IN WORDS**	**UNIT PRICE**	**AMOUNT**
701.1	200	CEMENT CONCRETE SIDEWALK AT DRIVEWAYS AT _____ PER SQUARE YARD		
701.2	350	CEMENT CONCRETE PEDESTRIAN CURB RAMP AT _____ PER SQUARE YARD		
702.	65	HOT MIX ASPHALT SIDEWALK OR DRIVEWAY AT _____ PER TON		
703.1	14	CONCRETE WHEEL STOP AT _____ EACH		
704.3	9	SPECIAL CONCRETE SEAT WALLS - PRECAST WITH TIMBER SEAT AT _____ EACH		
706.31	210	CONCRETE UNIT PAVER ON GRADE - LARGE PAVERS AT _____ PER SQUARE YARD		
706.32	175	CONCRETE UNIT PAVER ON GRADE - SMALL PAVERS AT _____ PER SQUARE YARD		
706.33	450	CONCRETE UNIT PAVER ON STRUCTURE - LARGE PAVERS AT _____ PER SQUARE YARD		
706.34	375	CONCRETE UNIT PAVER ON STRUCTURE - SMALL PAVERS AT _____ PER SQUARE YARD		

Project # 608930	Contract # 128034			
Location : LAWRENCE				
Description : Lawrence Manchester Rail Corridor (LMRC) Rail Trail				
ITEM #	**QUANTITY**	**ITEM WITH UNIT BID PRICE WRITTEN IN WORDS**	**UNIT PRICE**	**AMOUNT**
706.65	50	GRANITE PAVER BAND - ON GRADE AT _____ PER SQUARE YARD		
706.66	200	GRANITE PAVER BAND - ON STRUCTURE AT _____ PER SQUARE YARD		
707.11	15	TIMBER BENCH AT _____ EACH		
707.18	2	STACKED TIMBER SEATING STRUCTURE AT _____ EACH		
707.2	8	TRASH RECEPTACLE AT _____ EACH		
707.62	2	GAMING TABLE AND CHAIRS (FIXED) AT _____ EACH		
707.622	3	TABLE AND CHAIRS (FIXED) AT _____ EACH		
707.9	7	BICYCLE RACK AT _____ EACH		
740.	36	ENGINEER'S FIELD OFFICE AND EQUIPMENT (TYPE A) AT _____ PER MONTH		

Project # 608930 Contract # 128034				
Location : LAWRENCE				
Description : Lawrence Manchester Rail Corridor (LMRC) Rail Trail				
ITEM #	**QUANTITY**	**ITEM WITH UNIT BID PRICE WRITTEN IN WORDS**	**UNIT PRICE**	**AMOUNT**
748.	1	MOBILIZATION AT _____ LUMP SUM		
751.	5	LOAM FOR ROADSIDES AT _____ PER CUBIC YARD		
751.7	80	COMPOST BLANKET AT _____ PER CUBIC YARD		
751.999	1,450	BIORETENTION SOIL MIX AT _____ PER CUBIC YARD		
752.2	3,600	PLANTING SOIL AT _____ PER CUBIC YARD		
755.35	1	INLAND WETLAND REPLICATION AREA AT _____ LUMP SUM		
755.45	200	WETLAND RESTORATION AT _____ PER SQUARE YARD		
755.75	80	WETLAND SPECIALIST AT _____ PER HOUR		
755.76	1	WETLANDS MONITORING REPORTS AT _____ LUMP SUM		

Project # 608930 Contract # 128034				
Location : LAWRENCE				
Description : Lawrence Manchester Rail Corridor (LMRC) Rail Trail				
ITEM #	**QUANTITY**	**ITEM WITH UNIT BID PRICE WRITTEN IN WORDS**	**UNIT PRICE**	**AMOUNT**
756.	1	NPDES STORMWATER POLLUTION PREVENTION PLAN AT _____ LUMP SUM		
765.11	4,500	SEEDING TURF/ LAWN MIX AT _____ PER SQUARE YARD		
765.21	180	ANNUAL COVER CROP FOR NATIVE SEEDING AT _____ PER POUND		
765.411	70	SHORT GRASSLAND MIX AT _____ PER POUND		
765.414	25	LOW GROWING SHOWY UPLAND MIX AT _____ PER POUND		
765.552	20	WETLAND SEED - OBLIGATE MIX AT _____ PER POUND		
765.554	6	URBAN RAIN GARDEN MIX AT _____ PER POUND		
765.635	37,500	NATIVE SEEDING AND ESTABLISHMENT AT _____ PER SQUARE YARD		
765.664	28,000	MOWING FOR NATIVE SEED ESTABLISHMENT AT _____ PER SQUARE YARD		

Project # 608930 Contract # 128034				
Location : LAWRENCE				
Description : Lawrence Manchester Rail Corridor (LMRC) Rail Trail				
ITEM #	**QUANTITY**	**ITEM WITH UNIT BID PRICE WRITTEN IN WORDS**	**UNIT PRICE**	**AMOUNT**
767.121	525	SEDIMENT CONTROL BARRIER AT _____ PER FOOT		
767.122	1,800	SEDIMENT BARRIER - COIR LOG AT _____ PER FOOT		
801.72	250	2 INCH ELECTRICAL CONDUIT TYPE FRE AT _____ PER FOOT		
804.2	11,000	2 INCH ELECTRICAL CONDUIT TYPE NM - PLASTIC (UL) AT _____ PER FOOT		
804.3	260	3 INCH ELECTRICAL CONDUIT TYPE NM - PLASTIC -(UL) AT _____ PER FOOT		
804.4	2,300	4 INCH ELECTRICAL CONDUIT TYPE NM - PLASTIC -(UL) AT _____ PER FOOT		
804.41	3,400	4 INCH ELECTRICAL CONDUIT TYPE NM - FIBERGLASS (UL) AT _____ PER FOOT		
804.42	1	36 INCH SWEEP AND MANHOLE CONNECTION AT _____ LUMP SUM		
811.13	2	ELECTRIC MANHOLE - SD2.013 AT _____ EACH		

Project # 608930 Contract # 128034				
Location : LAWRENCE				
Description : Lawrence Manchester Rail Corridor (LMRC) Rail Trail				
ITEM #	**QUANTITY**	**ITEM WITH UNIT BID PRICE WRITTEN IN WORDS**	**UNIT PRICE**	**AMOUNT**
811.22	5	ELECTRIC HANDHOLE - SD2.022 AT _____ EACH		
811.23	1	ELECTRIC HANDHOLE - SD2.023 AT _____ EACH		
811.24	1	ELECTRIC HANDHOLE - SD2.024 AT _____ EACH		
811.30	109	PULL BOX 8 X 23 INCHES - SD2.030 AT _____ EACH		
811.31	4	PULL BOX 12 X 12 INCHES - SD2.031 AT _____ EACH		
811.35	2	PULL BOX ADJUSTED AT _____ EACH		
811.36	2	ELECTRIC MANHOLE ADJUSTED AT _____ EACH		
811.37	4	ELECTRIC HANDHOLE ADJUSTED AT _____ EACH		
811.39	5	ELECTRIC HANDHOLE REMOVED AND STACKED AT _____ EACH		

Project # 608930 Contract # 128034				
Location : LAWRENCE				
Description : Lawrence Manchester Rail Corridor (LMRC) Rail Trail				
ITEM #	**QUANTITY**	**ITEM WITH UNIT BID PRICE WRITTEN IN WORDS**	**UNIT PRICE**	**AMOUNT**
811.41	23	JUNCTION BOX 8 X 6 X 4 INCHES AT _____ EACH		
811.63	25	JUNCTION BOX 12 X 12 X 10 INCHES AT _____ EACH		
812.09	105	LIGHT STANDARD FOUNDATION PRECAST AT _____ EACH		
813.30	5,500	WIRE TYPE 7 NO. 10 GENERAL PURPOSE AT _____ PER FOOT		
813.32	9,000	WIRE TYPE 7 NO. 6 GENERAL PURPOSE AT _____ PER FOOT		
813.34	37,000	WIRE TYPE 7 NO. 2 GENERAL PURPOSE AT _____ PER FOOT		
813.521	345	WIRE TYPE 10 NO.6 GROUNDING AND BONDING AT _____ PER FOOT		
813.522	1,600	WIRE TYPE 10 NO.10 GROUNDING AND BONDING AT _____ PER FOOT		
813.72	105	GROUND ROD 10 FEET LONG AT _____ EACH		

Project # 608930 Contract # 128034				
Location : LAWRENCE				
Description : Lawrence Manchester Rail Corridor (LMRC) Rail Trail				
ITEM #	**QUANTITY**	**ITEM WITH UNIT BID PRICE WRITTEN IN WORDS**	**UNIT PRICE**	**AMOUNT**
813.801	1	SERVICE CONNECTION (OVERHEAD) LOCATION NO. 1 AT _____ LUMP SUM		
813.802	1	SERVICE CONNECTION (OVERHEAD) LOCATION NO. 2 AT _____ LUMP SUM		
813.803	1	SERVICE CONNECTION (OVERHEAD) LOCATION NO. 3 AT _____ LUMP SUM		
813.811	1	ELECTRIC SERVICE RISER RELOCATION NO. 1 AT _____ LUMP SUM		
816.01	1	TRAFFIC SIGNAL RECONSTRUCTION LOCATION NO. 1 AT _____ LUMP SUM		
816.02	1	TRAFFIC SIGNAL RECONSTRUCTION LOCATION NO. 2 AT _____ LUMP SUM		
816.80	1	TRAFFIC CONTROL SIGNAL REMOVED AND STACKED AT _____ LUMP SUM		
819.9	2	TRAFFIC SIGNAL CONTROLLER REMOVED AND DISCARDED AT _____ EACH		
820.15	1	HIGHWAY LIGHTING - OVERHEAD REMOVED AND RESET AT _____ EACH		

Project # 608930 Contract # 128034				
Location : LAWRENCE				
Description : Lawrence Manchester Rail Corridor (LMRC) Rail Trail				
ITEM #	**QUANTITY**	**ITEM WITH UNIT BID PRICE WRITTEN IN WORDS**	**UNIT PRICE**	**AMOUNT**
821.992	105	PATH LIGHT POLE MOUNTED FIXTURE ASSEMBLY AT _____ EACH		
821.993	18	BRIDGE LIGHT COLUMN FIXTURE ASSEMBLY AT _____ EACH		
823.55	1	DMX CONTROL PANEL AT _____ LUMP SUM		
823.61	1	HIGHWAY LIGHTING LOAD CENTER NO.1 AT _____ LUMP SUM		
823.62	1	HIGHWAY LIGHTING LOAD CENTER NO.2 AT _____ LUMP SUM		
823.63	1	HIGHWAY LIGHTING LOAD CENTER NO.3 AT _____ LUMP SUM		
823.64	1	EXISTING HIGHWAY LIGHTING LOAD CENTER ADDITIONS AT _____ LUMP SUM		
823.71	1	HIGHWAY LIGHTING POLE AND LUMINAIRE REMOVED AND STACKED AT _____ EACH		
825.21	2	RRFB (2-POST ASSEMBLY SYSTEM) LOCATION 1 AT _____ EACH		

Project # 608930 Contract # 128034				
Location : LAWRENCE				
Description : Lawrence Manchester Rail Corridor (LMRC) Rail Trail				
ITEM #	**QUANTITY**	**ITEM WITH UNIT BID PRICE WRITTEN IN WORDS**	**UNIT PRICE**	**AMOUNT**
825.22	2	RRFB (2-POST ASSEMBLY SYSTEM) LOCATION 2 AT _____ EACH		
825.23	2	RRFB (2-POST ASSEMBLY SYSTEM) LOCATION 3 AT _____ EACH		
832.	225	WARNING-REGULATORY AND ROUTE MARKER - ALUMINUM PANEL (TYPE A) AT _____ PER SQUARE FOOT		
847.1	24	SIGN SUP (N/GUIDE)+RTE MKR W/1 BRKWAY POST ASSEMBLY - STEEL AT _____ EACH		
848.1	4	SIGN SUP (N/GUIDE)+RTE MKR W/2 BRKWAY POST ASSEMBLIES-STEEL AT _____ EACH		
850.41	640	ROADWAY FLAGGER AT _____ PER HOUR		
852.	1,275	SAFETY SIGNING FOR TRAFFIC MANAGEMENT AT _____ PER SQUARE FOOT		
852.12	2	TMEPORARY PEDESTRIAN CURB RAMP AT _____ EACH		
853.1	4	PORTABLE BREAKAWAY BARRICADE TYPE III AT _____ EACH		

Project # 608930 Contract # 128034				
Location : LAWRENCE				
Description : Lawrence Manchester Rail Corridor (LMRC) Rail Trail				
ITEM #	**QUANTITY**	**ITEM WITH UNIT BID PRICE WRITTEN IN WORDS**	**UNIT PRICE**	**AMOUNT**
853.2	200	TEMPORARY BARRIER (TL-2) AT _____ PER FOOT		
853.21	100	TEMPORARY BARRIER REMOVED AND RESET AT _____ PER FOOT		
853.8	10	TEMPORARY ILLUMINATION FOR WORK ZONE AT _____ PER DAY		
854.016	3,500	TEMPORARY PAVING MARKINGS - 6 INCH (PAINTED) AT _____ PER FOOT		
854.1	650	PAVEMENT MARKING REMOVAL AT _____ PER SQUARE FOOT		
856.	270	ARROW BOARD AT _____ PER DAY		
856.12	1,260	PORTABLE CHANGEABLE MESSAGE SIGN AT _____ PER DAY		
859.	27,000	REFLECTORIZED DRUM AT _____ PER DAY		
859.1	10	REFLECTORIZED DRUMS WITH SEQUENTIAL FLASHING WARNING LIGHTS AT _____ PER DAY		

Project # 608930 Contract # 128034				
Location : LAWRENCE				
Description : Lawrence Manchester Rail Corridor (LMRC) Rail Trail				
ITEM #	**QUANTITY**	**ITEM WITH UNIT BID PRICE WRITTEN IN WORDS**	**UNIT PRICE**	**AMOUNT**
864.04	600	PAVEMENT ARROWS AND LEGENDS REFLECTORIZED WHITE (THERMOPLASTIC) AT _____ PER SQUARE FOOT		
866.106	2,100	6 INCH REFLECTORIZED WHITE LINE (THERMOPLASTIC) AT _____ PER FOOT		
866.112	1,450	12 INCH REFLECTORIZED WHITE LINE (THERMOPLASTIC) AT _____ PER FOOT		
867.106	1,750	6 INCH REFLECTORIZED YELLOW LINE (THERMOPLASTIC) AT _____ PER FOOT		
874.	6	STREET NAME SIGN AT _____ EACH		
874.2	9	TRAFFIC SIGN REMOVED AND RESET AT _____ EACH		
874.4	4	TRAFFIC SIGN REMOVED AND STACKED AT _____ EACH		
874.71	4	MISCELLANEOUS SIGNS 'TRAIL SIGNS AND POSTS' AT _____ EACH		
874.8	2	WEATHERING STEEL BRIDGE RAIL SIGNAGE AT _____ EACH		

Project # 608930	Contract # 128034			
Location : LAWRENCE				
Description : Lawrence Manchester Rail Corridor (LMRC) Rail Trail				
ITEM #	**QUANTITY**	**ITEM WITH UNIT BID PRICE WRITTEN IN WORDS**	**UNIT PRICE**	**AMOUNT**
904.4	70	4000 PSI, 3/4 INCH, 585 HP CEMENT CONCRETE AT _____ PER CUBIC YARD		
910.1	6,000	STEEL REINFORCEMENT FOR STRUCTURES - EPOXY COATED AT _____ PER POUND		
911.1	620	SHEAR CONNECTORS AT _____ EACH		
950.19	1	TEMPORARY SUPPORT OF EXCAVATION BRIDGE NO. L-04-027 (C90) AT _____ LUMP SUM		
960.2	102,000	STRUCTURAL STEEL - COATED STEEL BRIDGE NO. L-04-032 (C82) AT _____ PER POUND		
960.90	1	STRUCTURAL STEEL INSPECTION, BRIDGE NO. L-04-032 (C82) AT _____ LUMP SUM		
960.91	1	STRUCTURAL STEEL INSPECTION, BRIDGE L-04-045 (C91) AT _____ LUMP SUM		
961.201	1	CLEAN (FULL REMOVAL) AND PAINT STEEL BRIDGE NO. L-04-032 (C82) AT _____ LUMP SUM		
961.202	1	CLEAN (FULL REMOVAL) AND PAINT STEEL BRIDGE NO. L-04-045 (C91) AT _____ LUMP SUM		

Project # 608930	Contract # 128034			
Location : LAWRENCE				
Description : Lawrence Manchester Rail Corridor (LMRC) Rail Trail				
ITEM #	**QUANTITY**	**ITEM WITH UNIT BID PRICE WRITTEN IN WORDS**	**UNIT PRICE**	**AMOUNT**
962.20	2,500	ANTI-GRAFFITI SURFACE COATING AT _____ PER SQUARE YARD		
986.	125	MODIFIED ROCKFILL AT _____ PER TON		
992.1	1	ALTERATION TO BRIDGE STRUCTURE NO. L-04-032 (C82) AT _____ LUMP SUM		
992.2	1	ALTERATION TO BRIDGE STRUCTURE NO. L-04-045 (C91) AT _____ LUMP SUM		
994.111	1	TEMPORARY PROTECTIVE SHIELDING, BRIDGE NO. L-04-032 (C82) AT _____ LUMP SUM		
994.112	1	TEMPORARY PROTECTIVE SHIELDING, BRIDGE NO. L-04-045 (C91) AT _____ LUMP SUM		
995.	1	BRIDGE SUPERSTRUCTURE, BRIDGE NO.L-04-030 (8JA) AT _____ LUMP SUM		
995.01	1	BRIDGE STRUCTURE, BRIDGE NO. L-04-027 (C90) AT _____ LUMP SUM		
Total Qty:	498,973			

DOCUMENT B00853

SCHEDULE OF PARTICIPATION BY DISADVANTAGED BUSINESS ENTERPRISES (DBES)

PRIME BIDDER: _____

DATE OF BID OPENING: _____ PROJECT NO.: 608930

FEDERAL AID PROJECT NO. CMQ-003S(733)X

PROJECT LOCATION: LAWRENCE

Name, Address, and Phone Number(s) of DBE	Name of Activity	(a)† DBE Contractor Activity Amount *Construction Work*	(b) DBE Other Business Amount *Services, Supplies, Material*	(c) Total amount eligible for credit under rules in Section 6 of Document 00719 - DBE Special Provisions
Total Bid Amount	TOTALS:	$	$	$
$	DBE Percentage of Total Bid:	%	%	%

†*Column (a) must be at least one-half of the DBE participation goal. Attach additional sheets as necessary.*

Is MassDOT Document B00855 (Joint Check Approval) being submitted for any of the above? ☐ Yes ☐ No ☐ Not Known at This Time

Will any of the contractors listed above be using a third party (i.e. manufacturer) to deliver materials or perform any portion of work by a third party? ☐ Yes ☐ No

CERTIFICATION: I HEREBY DECLARE, TO THE BEST OF MY KNOWLEDGE, THAT **I HAVE READ THE SPECIAL PROVISIONS FOR PARTICIPATION BY DISADVANTAGED BUSINESS ENTERPRISES - DOCUMENT 00719.** BOTH THIS SCHEDULE AND THE RELEVANT AND ACCOMPANYING LETTER(S) OF INTENT ARE IN FULL COMPLIANCE WITH THE PROVISIONS OF, AND IN ACCORDANCE WITH, TITLE 49 CODE OF FEDERAL REGULATIONS, PART 26 (49 CFR Part 26).

SIGNATURE:_____ DATE_____

NAME AND TITLE (*PRINT*):_____

EMAIL ADDRESS: _____TEL NO.:_____

*** END OF DOCUMENT ***

THIS PAGE INTENTIONALLY LEFT BLANK

DOCUMENT B00854

DISADVANTAGED BUSINESS ENTERPRISES (DBE) PARTICIPATION
LETTER OF INTENT
(To be completed by the DBE – Page 1 of 2)

TO: _____ (Prime Bidder)

FROM: _____ (DBE Firm)

RE: PROJECT NO.: 608930 FEDERAL AID PROJECT NO.: CMQ-003S(733)X

PROJECT LOCATION: LAWRENCE

DATE OF BID OPENING: _____

I, _____, authorized signatory of the above-referenced DBE firm hereby declare:
Print Name

1. My company is currently certified as a Disadvantaged Business Enterprise (DBE) by the Massachusetts Supplier Diversity Office ("SDO"), formerly known as the State Office of Minority and Women Business Assistance (SOMWBA), as a: (check all applicable, see Section 1 of the Special Provisions For Participation By Disadvantaged Business Enterprises, MassDOT Document 00719 additional guidance is available at Title 49, Code of Federal Regulations, Part 26.55 (49 CFR Part 26.55)):

   ( ) CONTRACTOR ( ) REGULAR DEALER ( ) BROKER
   ( ) MANUFACTURER ( ) TRUCKING OPERATIONS ( ) PROFESSIONAL SERVICES

2. My firm has the ability to manage, supervise and perform the activity described on page 2 of this Letter of Intent. If you are awarded the contract, my company intends to enter into a contract with your firm to perform the items of work or other activity described on the following sheet for the prices indicated.

3. There have been no changes affecting the ownership, control or independence of my company since my last certification review on _____ ___, 20___. If any such change is planned or occurs prior to my company's completion of this proposed work, I will give prior written notification to your firm and to the Massachusetts Department of Transportation ("MassDOT") Office of Civil Rights and SDO.

4. I have read the MassDOT proposal for the Project which may be entitled "Project Contract Documents and Special Provisions" or the draft "Contract" which includes MassDOT Document 00719, and acknowledge that my company will comply with that document and the requirements of 49 CFR Part 26.

5. For the purpose of obtaining subcontractor approval from MassDOT, my firm will provide to you:

   A. ***The following construction work:***
      (i) a resume, stating the qualifications and experience, of the superintendent or foreperson who will supervise on site-work;
      (ii) a list of equipment owned or leased by my firm for use on this project; and
      (iii) a list of all projects (public or private) upon which my firm is currently performing, is committed to perform, or intends to make a commitment to perform. I shall also include, for each project: the name and telephone number of a contact person for the contracting authority, person, or organization; the dollar value of the work; a description of the work; and my firm's work schedule for the project.

   B. ***The following services, materials or supplies***:
      (i) a written agreement and invoices for the materials or supplies, and any other documents evidencing the terms of providing such items;
      (ii) information concerning brokers fees and commissions for providing services or materials; and
      (iii) a statement concerning whether my firm intends or will be required to use a joint check arrangement; and any other documents that may be required by MassDOT.

_____ Date_____
DBE Company Authorized Signature

DISADVANTAGED BUSINESS ENTERPRISES (DBE) PARTICIPATION
LETTER OF INTENT
(To be completed by the DBE – Page 2 of 2)

DATE OF BID OPENING: _____

PROJECT NUMBER: 608930

FEDERAL AID PROJECT NUMBER: CMQ-003S(733)X

PROJECT LOCATION: LAWRENCE

PRIME BIDDER: _____

DBE COMPANY NAME: _____

Item number if applicable	NAICS Code	Description of Activity with notations such as Services, or Brokerage, Installation Only, Material Only, or Complete	Quantity	Unit Price	Amount
			TOTAL AMOUNT:		

Please give full explanations, attach additional sheets if necessary.

I HEREBY VERIFY THAT _____ WILL SOLELY
(DBE company name)
PERFORM THE WORK, OR PROVIDE THE SERVICES OR MATERIALS, AS DESCRIBED ABOVE.

DBE AUTHORIZED SIGNATURE: _____

NAME AND TITLE (PRINT):_____

TELEPHONE NUMBER: _____FAX NUMBER: _____

EMAIL ADDRESS: _____

Rev'd 9/20/19

*** END OF DOCUMENT ***

DOCUMENT B00855

DBE JOINT CHECK ARRANGEMENT APPROVAL FORM

(to be submitted by Prime Contractor)

Contract No: 128034 **Project No.** 608930 **Federal Aid No.:** CMQ-003S(733)X

Location: LAWRENCE **Bid Opening Date:** _____

Project Description: Lawrence Manchester Rail Corridor (LMRC) Rail Trail

We have received the attached request for the use of a joint check arrangement from _____ _____ , a DBE on the above- referenced Contract and _____ _____, a Material Supplier/Vendor for the subject Contract. The DBE has complied with the requirements of 49 CFR Part 26.55(c)(1). In particular, the DBE has:

- a written agreement with the material supplier/vendor;
- applied for credit with the subject material supplier and has supplied the vendor's response;
- shown that it will place all orders to the subject material supplier/vendor;
- made and retains all decision-making responsibilities concerning the materials; and
- provided a Joint Check Agreement that is acceptable to MassDOT;

As the Contractor for the Project, we agree to issue joint checks (made payable to the Material Supplier/Vendor and the DBE) for payment of sums due pursuant to invoices from the Supplier/Vendor and DBE.

Contractor:

_____ _____
Company Name Signature
Duly Authorized

_____
Printed Name

_____ _____
Date Title

SubContractor:

_____ _____
Company Name Signature –
Duly Authorized

_____
Printed Name

_____ _____
Date Title

*** END OF DOCUMENT ***

THIS PAGE INTENTIONALLY LEFT BLANK

DOCUMENT B00856

JOINT VENTURE AFFIDAVIT

(All Firms)

- All Information Requested By This Schedule Must Be Answered. Additional Sheets May Be Attached.
- If, there is any change in the information submitted, the Joint Venture parties must inform MassDOT Pre-Qualifications Office (and, if one of the companies is a DBE, the Director of Contract Compliance, Office of Civil Rights) *prior* to such change, in writing, either directly or through the Prime Contractor if the Joint Venture is a subcontractor.
- If the Joint Venture Entity will be the bidder on a prime Contract, it must bid and submit all required documents (insurance, worker's compensation, bonds, etc.) in the name of the Joint Venture Entity.

I. Name of Joint Venture: _____

Type of Entity if applicable (Corp., LLC):_____Filing State _____

Address of joint venture: _____

_____

Phone No(s) for JV Entity: _____E-mail:_____

Contact Person(s)_____

Tax ID/EIN of Joint Venture: _____Vendor Code:_____

II. Identify each firm or party to the Joint Venture:

Name of Firm: _____

Address: _____

Phone : _____E-mail:_____

Contact person(s) _____

Name of Firm: _____

Address: _____

Phone: _____E-mail:_____

Contact Person(s)_____

III. Describe the role(s) of the each party to the Joint Venture:

_____

_____

IV. Attach a copy of the Joint Venture Agreement. The proposed Joint Venture Agreement should include specific details including, but not limited to: (1) the contributions of capital and equipment; (2) work items to be performed by each company's forces, (3) work items to be performed under the supervision of any DBE Venturer; (4) the commitment of management, supervisory and operative personnel employed by the DBE to be dedicated to the performance of the Project; and (5) warranty, guaranty, and indemnification clauses.

V. Attach any applicable Corporate or LLC Votes, Authorizations, etc.

VI. Ownership of the Joint Venture:

A. What is the percentage(s) of each company's ownership in the Joint Venture?

ownership percentage(s): _____

ownership percentage(s): _____

B. Specify percentages for each of the following (provide narrative descriptions and other detail as applicable):

1. Sharing of profit and loss: _____
2. Capital contributions:

(a) Dollar amounts of initial contribution: _____

(b) Dollar amounts of anticipated on-going contributions: _____

(c) Contributions of equipment (specify types, quality and quantities of equipment to be provided by each firm): _____

_____

4. Other applicable ownership interests, including ownership options or other agreements, which restrict or limit ownership and/or control:

_____

_____

5. Provide copies of all other written agreements between firms concerning bidding and operation of this Project or projects or contracts.

6. Identify all current contracts and contracts completed during the past two (2) years by either of the Joint Venture partners to this Joint Venture:

_____

_____

VII. Control of and Participation in the Joint Venture. Identify by name and firm those individuals who are, or will be, responsible for and have the authority to engage in the following management functions and policy decisions. (Indicate any limitations to their authority such as dollar limits and co-signatory requirements.):

A. Joint Venture check signing:

_____

_____

B. Authority to enter Contracts on behalf of the Joint Venture:

_____

_____

C. Signing, co-signing and/or collateralizing loans:

_____

_____

D. Acquisition of lines of credit:

E. Acquisition and indemnification of payment and performance bonds:

F. Negotiating and signing labor agreements:

G. Management of contract performance. *(Identify by name and firm only)*:

1. Supervision of field operations:
2. Major purchases:
3. Estimating:
4. Engineering:

VIII. Financial Controls of Joint Venture:

A. Which firm and/or individual will be responsible for keeping the books of account?

B. Identify the "Managing Partner," if any, and describe the means and measure of their compensation:

C. What authority does each firm have to commit or obligate the other to insurance and bonding companies, financing institutions, suppliers, subcontractors, and/or other parties participating in the performance of this Contract or the work of this Project?

IX. Personnel of Joint Venture: State the approximate number of personnel (by trade) needed to perform the Joint Venture's work under this Contract. Indicate whether they will be employees of the majority firm, DBE firm, or the Joint Venture.

	Firm 1 (number)	Firm 2 (number)	Joint Venture (number)
Trade			
Professional			
Administrative/Clerical			
Unskilled Labor			

Will any personnel proposed for this Project be employees of the Joint Venture?: _____

If so, who: _____

A. Are any proposed Joint Venture employees currently employed by either firm?

Employed by Firm 1: _____ Employed by firm 2 _____

B. Identify by name and firm the individual who will be responsible for Joint Venture hiring: ____

_____

X. Additional Information. Please state any material facts and additional information pertinent to the control and structure of this Joint Venture.

_____

_____

XI. AFFIDAVIT OF JOINT VENTURE PARTIES. The undersigned affirm that the foregoing statements and attached documents are correct and include all material information necessary to identify and explain the terms and operations of our Joint Venture and the intended participation of each firm in the undertaking. Further, the undersigned covenant and agree to provide to MassDOT current, complete and accurate information regarding actual Joint Venture work, payments, and any proposed changes to any provisions of the Joint Venture, or the nature, character of each party to the Joint Venture. We understand that any material misrepresentation will be grounds for terminating any Contract awarded and for initiating action under Federal or State laws concerning false statements.

Firm 1	Firm 2
Signature Duly Authorized	Signature Duly Authorized
Printed Name and Title	Printed Name and Title
Date	Date

*** END OF DOCUMENT ***