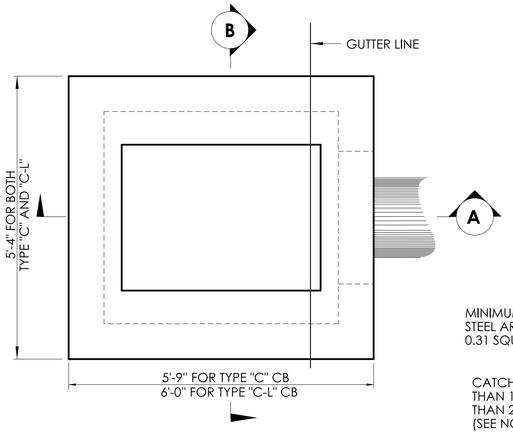

PLAN

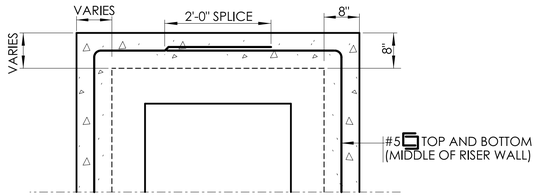

HALF REDUCER SECTION (TYP.)

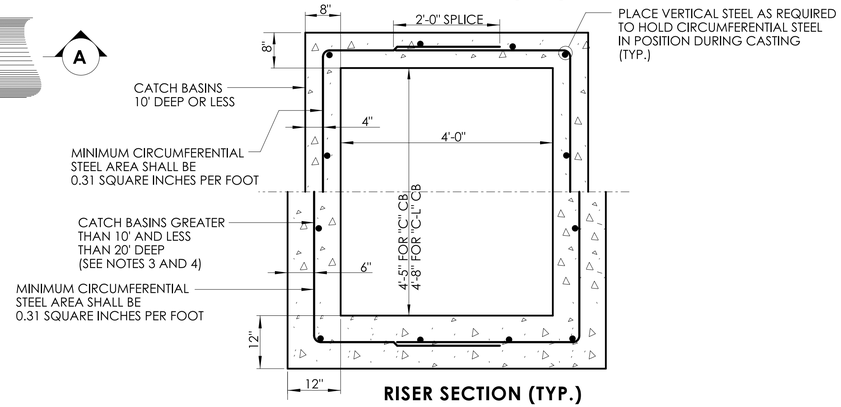

RISER SECTION (TYP.)

GENERAL NOTES:

1. WELDED WIRE FABRIC WITH AN AREA EQUAL TO OR GREATER THAN THE REINFORCING SHOWN MAY BE SUBSTITUTED AS APPROVED BY THE ENGINEER.
2. ALL REINFORCEMENT SHALL HAVE A MINIMUM CLEAR COVER OF 2 INCHES, EXCEPT FOR BENEATH BOTTOM REINFORCEMENT IN TOP SLABS, WHERE THE MINIMUM MAY BE 1½ INCHES.
3. WALL THICKNESS OF ALL CATCH BASINS OVER 10 FEET DEEP SHALL BE INCREASED TO 12 INCHES. INSIDE DIMENSIONS SHALL REMAIN THE SAME. THE 12 INCH THICKNESS SHALL START AFTER THE FIRST 10 FEET.
4. BASES AND RISERS AT A DEPTH OF 20 FEET AND GREATER SHALL BE DESIGNED BY THE CONTRACTOR AND WORKING DRAWINGS SHALL BE SUBMITTED TO THE ENGINEER FOR REVIEW.
5. RISERS MAY BE PREFABRICATED WITH PIPE OPENINGS IN ALL FOUR WALLS. ADEQUATE REINFORCING AROUND PIPE OPENINGS SHALL BE PROVIDED. RISERS USED WHERE A PIPE OPENING IS TO REMAIN IN PLACE MUST BE FORMED UP WITH BRICK AS DIRECTED BY THE ENGINEER.
6. RISERS SHALL NEVER HAVE CORNER PIPE ENTRIES. ROUND STRUCTURES SHALL BE USED WHEN PIPES CANNOT ALIGN WITH A RECTANGULAR STRUCTURE KNOCK OUT.
7. FOR CATCH BASIN TOPS, SEE SHEET NO. HW-586_07.

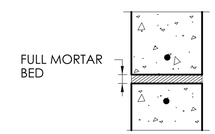

MORTAR JOINT

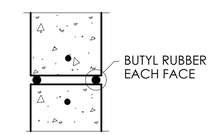

BUTYL RUBBER JOINT

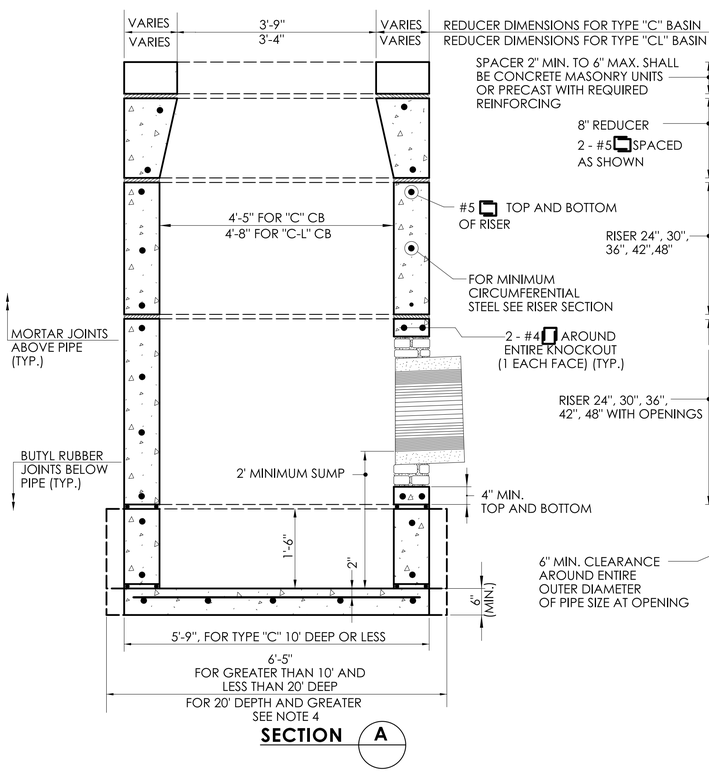

SECTION A

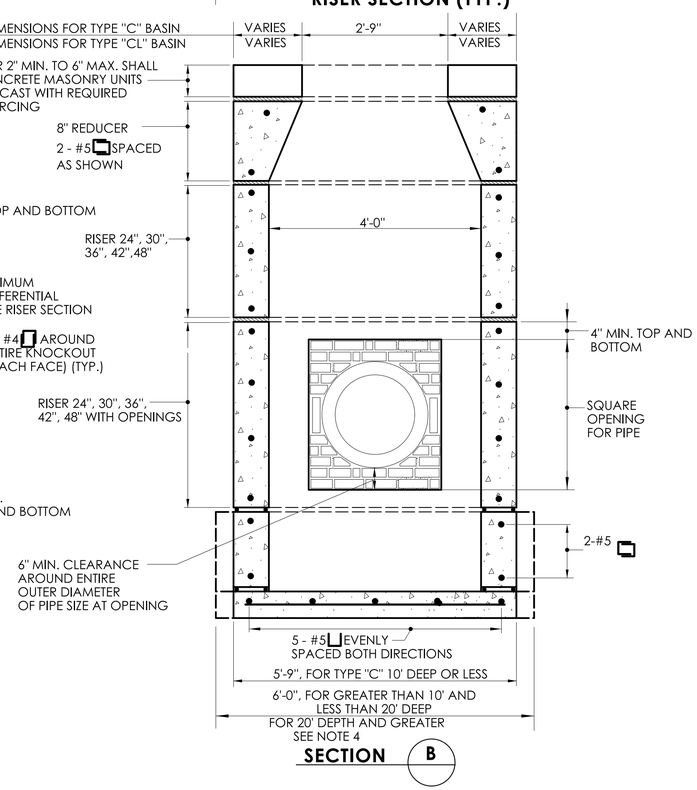

SECTION B

PRECAST CONCRETE TYPE "C" AND "C-L" DOUBLE GRATE TYPE I CATCH BASIN
(UNDER 10' DEEP SHOWN)

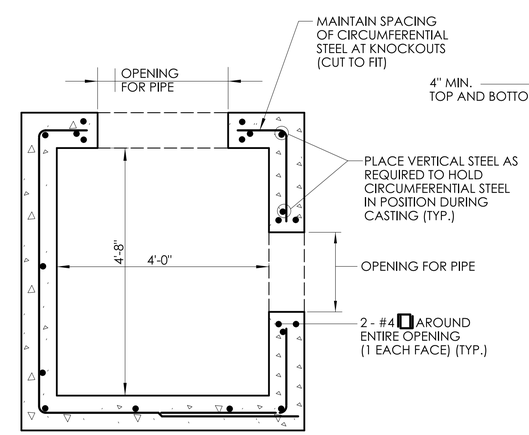

TYPICAL SECTION THRU SINGLE RISER WITH OPENING

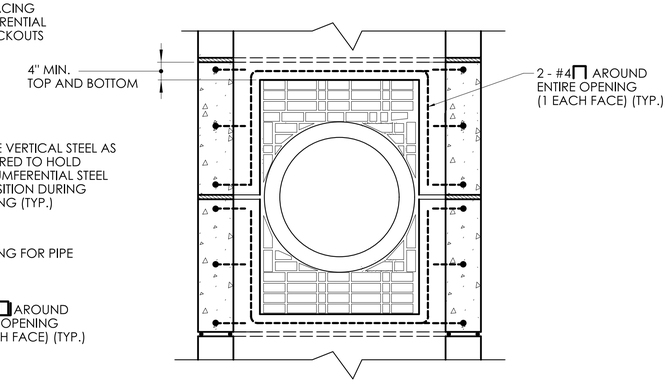

DOUBLE RISER OPENING (TYP.)
PIPES GREATER THAN 24" OUTSIDE DIAMETER

	NOT TO SCALE	SIGNATURE BLOCK: OFFICE OF ENGINEERING 2800 BERLIN TURNPIKE NEWINGTON, CT 06111	SUBMITTED BY: Digitally signed by Leo Fontaine, P.E. Date: 2024.08.16 11:07:54-04'00'	APPROVED BY: Digitally signed by Michael N. Calabrese, P.E. Date: 2024.10.18 11:56:58-04'00'	STATE OF CONNECTICUT DEPARTMENT OF TRANSPORTATION	CTDOT STANDARD SHEET	STANDARD SHEET TITLE: PRECAST CATCH BASIN TYPES FOR DOUBLE GRATE TYPE I	STANDARD SHEET NO.: HW- 586_05

PLOTTED DATE: 8/13/2024