GENERAL NOTES:

1. ALL DIMENSIONS ARE SUBJECT TO MANUFACTURING TOLERANCES.

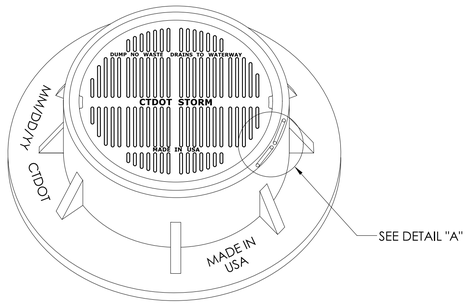

MANHOLE FRAME AND GRATE

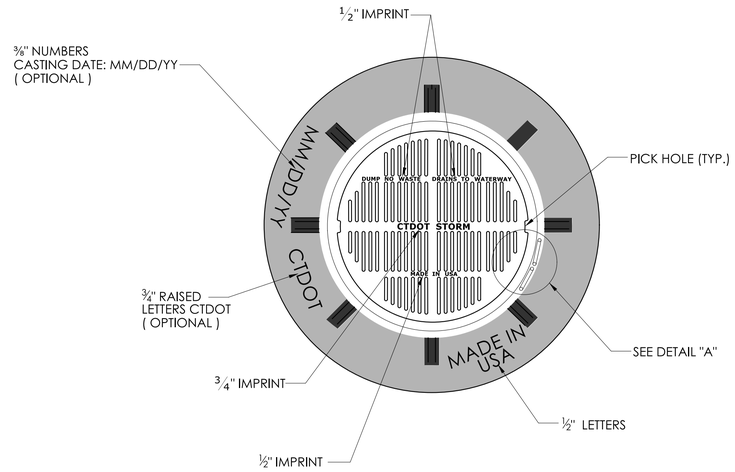

PLAN

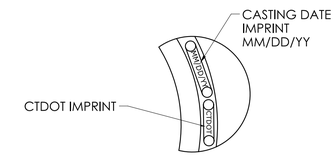

DETAIL "A"

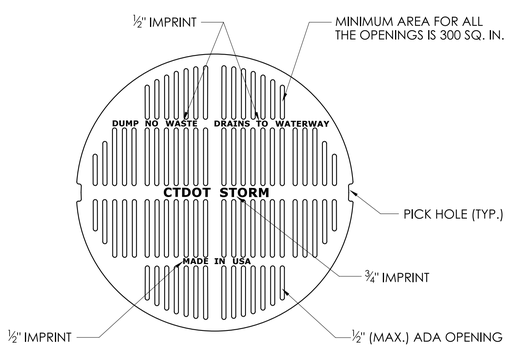

MANHOLE GRATE
PLAN

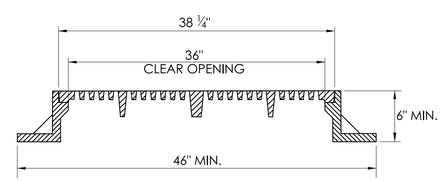

MANHOLE FRAME AND COVER

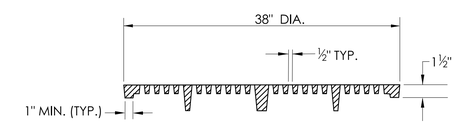

MANHOLE GRATE

	NOT TO SCALE	SIGNATURE BLOCK: OFFICE OF ENGINEERING 2800 BERLIN TURNPIKE NEWINGTON, CT 06111	SUBMITTED BY: Digitally signed by Leo Fontaine, P.E. Date: 2023.12.28 14:46:56-05'00'	APPROVED BY: Michael N. Calabrese, P.E. 2024.01.04 21:58:12-05'00'	STATE OF CONNECTICUT DEPARTMENT OF TRANSPORTATION	CTDOT STANDARD SHEET	STANDARD SHEET TITLE: MANHOLE FRAME AND GRATE	STANDARD SHEET NO.: HW-586_10b

PLOTTED DATE: 12/28/2023