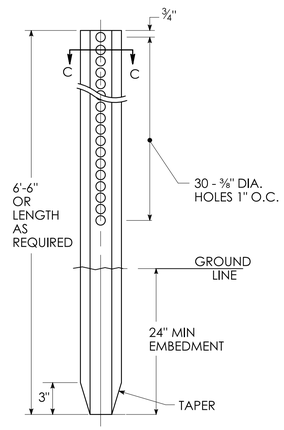

METAL DELINEATOR POST

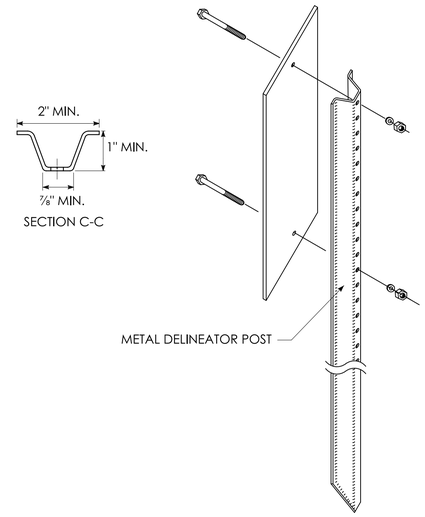

INSTALLATION ON DELINEATOR POSTS

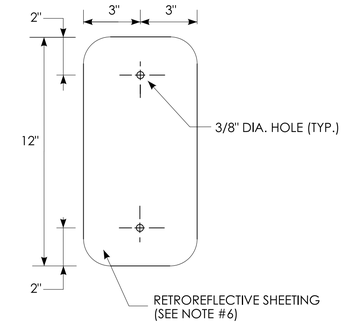

OBJECT MARKER DETAIL

GENERAL NOTES:

1. OBJECT MARKER (MAINTENANCE) SHALL BE INSTALLED ADJACENT TO; END WALLS, DRAINAGE PIPE ENDS, UNDERDRAIN OUTLETS AND PAVED APRONS WITH THE MARKER FACING PARALLEL TO THE DIRECTION OF TRAFFIC.
2. SECOND OBJECT MARKER (MAINTENANCE) SHALL ONLY BE INSTALLED 5 FEET FROM THE EDGE OF ROADWAY WHEN THE OBJECT MARKER ADJACENT TO STRUCTURE IS GREATER THAN 15 FEET FROM THE EDGE OF THE ROADWAY.
3. OBJECT MARKER (MAINTENANCE) SHALL BE INSTALLED AT METAL BEAM GUIDERAIL ANCHORS AS SHOWN ON;
   HW-911_01 R-B END ANCHORAGE TYPE I AND II,
   HW-911_02 MD-B END ANCHORAGE TYPE I.
4. OBJECT MARKERS SHALL BE FASTENED WITH 5/16" STAINLESS STEEL HEX HEAD BOLTS (LENGTH AS REQUIRED), WASHER AND FIBER INSERT SELF LOCKING NUT, ON STANDARD METAL DELINEATOR POST.
5. METAL DELINEATOR POST SHALL BE 1.12 LBS/FT. ASTM A36 STEEL
6. OBJECT MARKER COMPOSITION SHALL BE 14 GA. (0.080") THICK SHEET ALUMINUM WITH YELLOW TYPE XI RETROREFLECTIVE SHEETING.
7. ALL OBJECT MARKERS (MANTENANCE) SHALL BE INSTALLED WITH THE BOTTOM OF THE OBJECT MARKER 4 FT ABOVE THE GROUND.

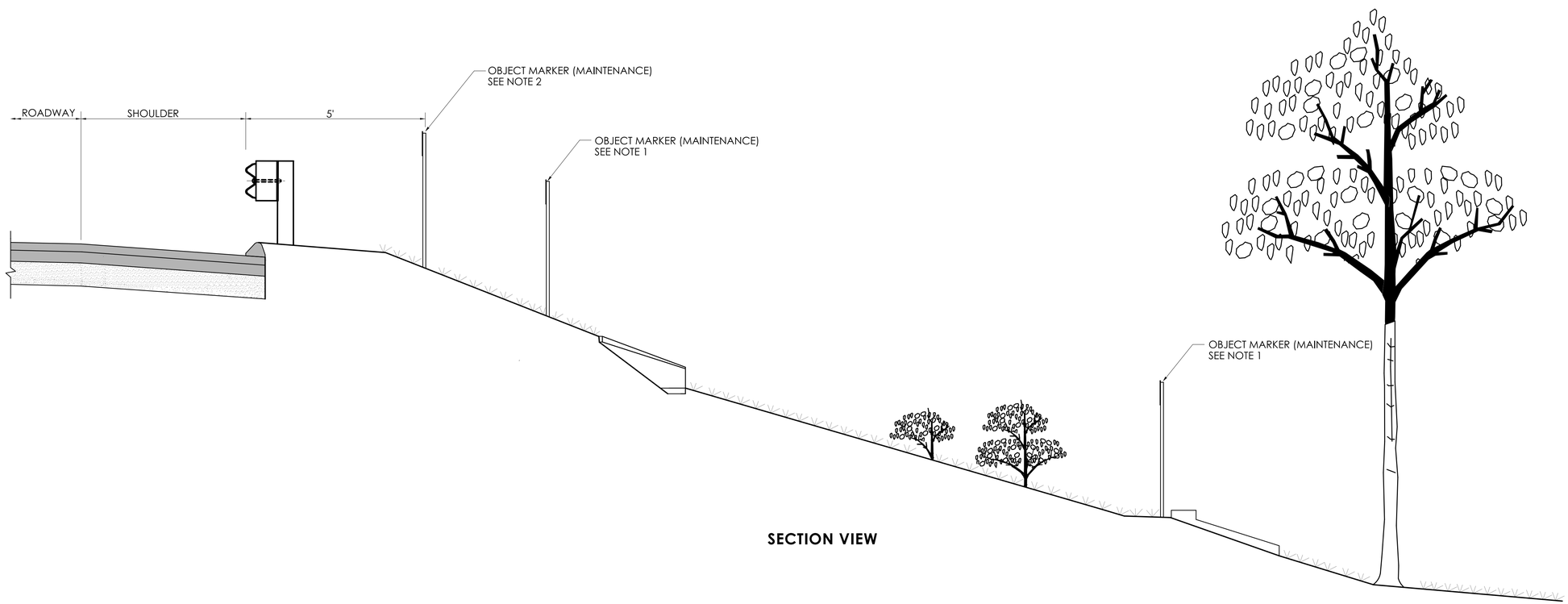

SECTION VIEW

	NOT TO SCALE	SIGNATURE BLOCK: OFFICE OF ENGINEERING 2800 BERLIN TURNPIKE NEWINGTON, CT 06111	SUBMITTED BY: Digitally signed by Leo Fontaine, P.E. Date: 2024.08.16 11:04:48-04'00'	APPROVED BY: Digitally signed by Michael N. Calabrese, P.E. Date: 2024.10.18 11:50:18-04'00'	STATE OF CONNECTICUT DEPARTMENT OF TRANSPORTATION	CTDOT STANDARD SHEET	STANDARD SHEET TITLE: OBJECT MARKER (MAINTENANCE)	STANDARD SHEET NO.: HW-930_01

PLOTTED DATE: 8/13/2024