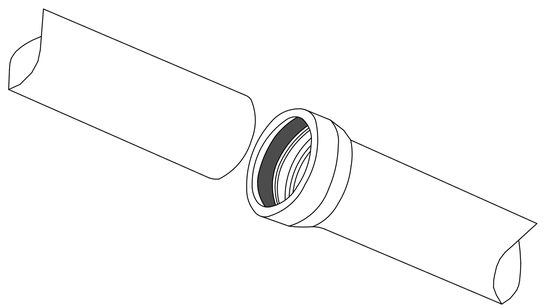

CONCRETE PIPE ASSEMBLY AT THE JOINT

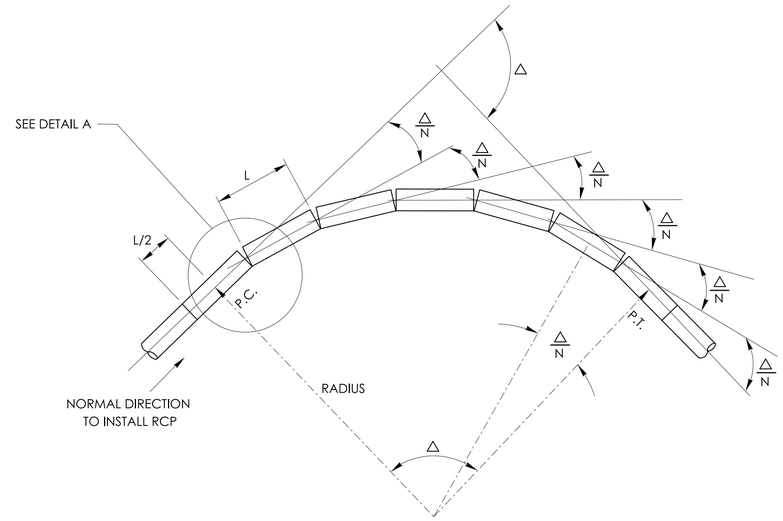

CURVED ALIGNMENT USING DEFLECTED STRAIGHT PIPE FOR MAXIMUM PULL 1/2"

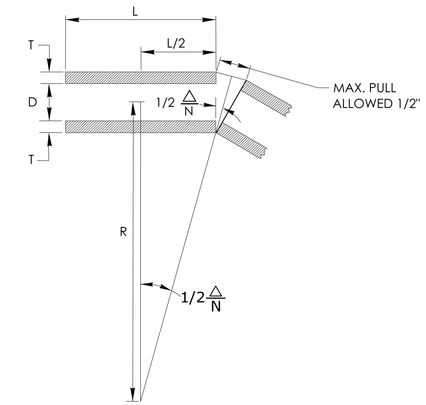

DETAIL A
DEFLECTING STANDARD FOR RCP

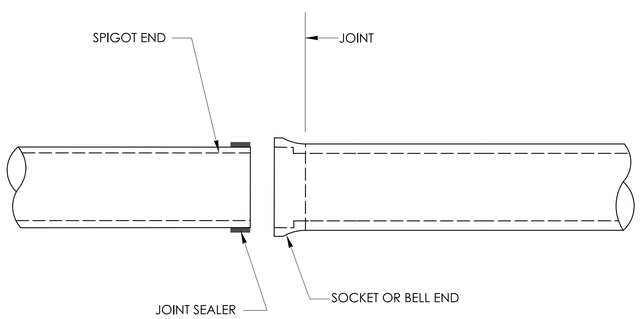

STANDARD CONNECTION FOR CONCRETE PIPE

MINIMUM RADII FOR RCP PIPE ON CURVED ALIGNMENT

DIAMETER (D)	MINIMUM RADII USING 8' PIPE LENGTHS
IN.	FT.
15	337
18	392
21	401
24	452
30	617
36	729
42	842
48	953
54	1066
60	1178
72	1403

NOTES:

1. N IS THE NUMBER OF PIPE SEGMENTS
2. D IS PIPE DIAMETER
3. L IS LENGTH OF PIPE
4. T IS PIPE THICKNESS
5. △ IS THE DEGREE OF CURVATURE

NOT TO SCALE

SIGNATURE BLOCK:
OFFICE OF ENGINEERING
2800 BERLIN TURNPIKE
NEWINGTON, CT 06111

SUBMITTED BY: Digitally signed by Leo Fontaine, P.E. Date: 2022.09.27 14:37:24-04'00'

APPROVED BY: Digitally signed by Calabrese, Michael Date: 2022.11.08 11:49:11-05'00'

STATE OF CONNECTICUT
DEPARTMENT OF TRANSPORTATION

CTDOT STANDARD SHEET

STANDARD SHEET TITLE: **CONCRETE PIPE CONNECTION SHEET 2**

STANDARD SHEET NO.: **HW-686_01b**

PLOTTED DATE: 9/21/2022