GENERAL NOTES:

1. "CONCRETE PIPE CONNECTION" IS INTENDED FOR USE WHERE A REINFORCED CONCRETE PIPE REPAIR OR MODIFICATION IS NEEDED SOMEWHERE WITHIN A PIPE RUN WHERE A BELL/SPIGOT JOINT CANNOT BE ACHIEVED.
2. MAINTAIN INTERIOR ALIGNMENT OF PIPE AT JOINTS UNTIL CONCRETE IS PROPERLY CURED.
3. BACKFILL OF PIPE REPAIR WITH SUITABLE MATERIAL MAY NOT TAKE PLACE UNTIL THE CONCRETE IS PROPERLY CURED.
4. CONTRACTOR SHALL MAINTAIN LINE AND GRADE OF PIPE REPAIR OR MODIFICATION BY METHODS APPROVED BY THE ENGINEER
5. HOLES OR GAPS AT JOINT LARGER THAN ⅜" SHALL BE FILLED OR WRAPPED TO PREVENT CONCRETE FROM ENTERING THE PIPE.

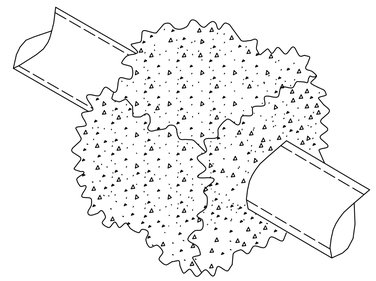

CONCRETE PIPE AT THE JOINT

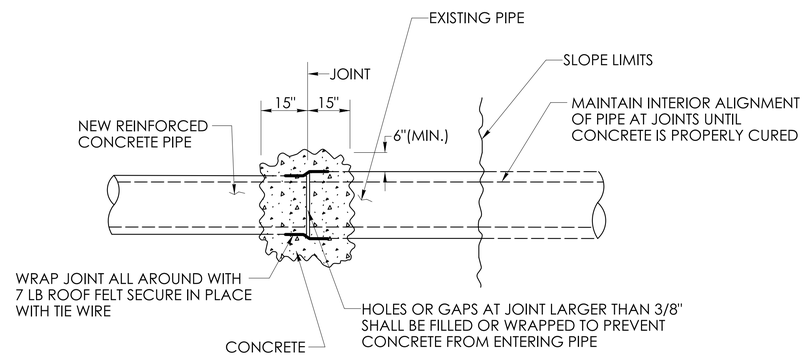

PLAN

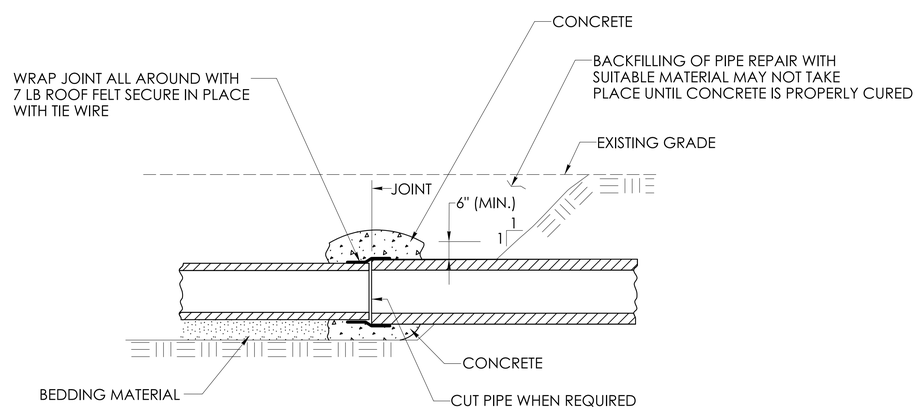

SECTION
CONCRETE PIPE CONNECTION

	NOT TO SCALE	SIGNATURE BLOCK: OFFICE OF ENGINEERING 2800 BERLIN TURNPIKE NEWINGTON, CT 06111	SUBMITTED BY: Digitally signed by Leo Fontaine, P.E. Date: 2022.09.27 14:37:04-04'00'	APPROVED BY: Digitally signed by Calabrese, Michael Date: 2022.11.08 11:49:40-05'00'	STATE OF CONNECTICUT DEPARTMENT OF TRANSPORTATION	CTDOT STANDARD SHEET	STANDARD SHEET TITLE: CONCRETE PIPE CONNECTION SHEET 1	STANDARD SHEET NO.: HW-686_01a

PLOTTED DATE: 9/21/2022