GENERAL NOTES:

1. SEE SHEET NO. HW-586_10a OR HW-586_10b FOR MANHOLE FRAME, GRATE AND COVER DETAIL.

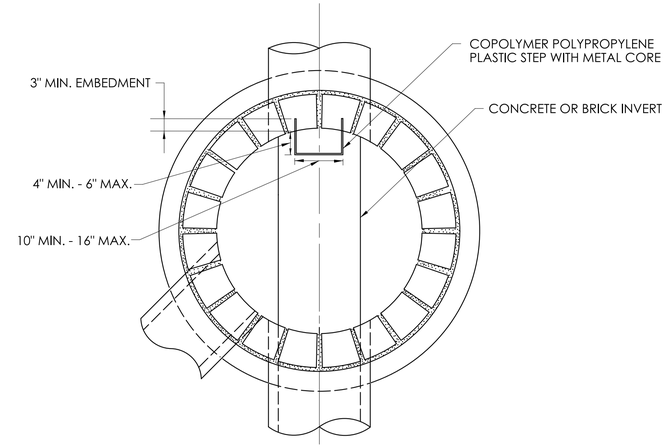

PLAN

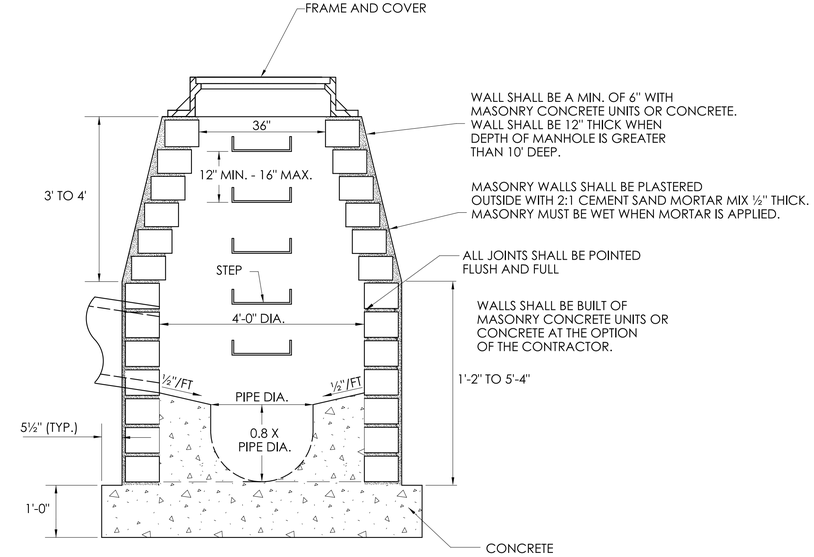

MANHOLE SECTION

	NOT TO SCALE	SIGNATURE BLOCK: OFFICE OF ENGINEERING 2800 BERLIN TURNPIKE NEWINGTON, CT 06111	SUBMITTED BY: Digitally signed by Leo Fontaine, P.E. Date: 2022.09.27 14:36:40-04'00'	APPROVED BY: Digitally signed by Calabrese, Michael Date: 2022.11.08 11:50:05-05'00'	STATE OF CONNECTICUT DEPARTMENT OF TRANSPORTATION	CTDOT STANDARD SHEET	STANDARD SHEET TITLE: MANHOLE NON - PRECAST CONCRETE UNIT	STANDARD SHEET NO.: HW-586_10d

PLOTTED DATE: 9/23/2022