GENERAL NOTES:

1. LOCK DOWN DEVICES SHALL BE INSTALLED AND MAINTAINED WHEN TRAFFIC WILL BE TRAVELING OVER CATCH BASIN WITH TYPE "A" GRATES OR TYPE "B" GRATES AS DIRECTED BY THE ENGINEER.
2. FOR FRAMES AND GRATES DETAILS, SEE SHEET NO. HW-586_08
3. 4" BITUMINOUS CONCRETE PARK CURBING SHOWN FOR THE "C" TOP.

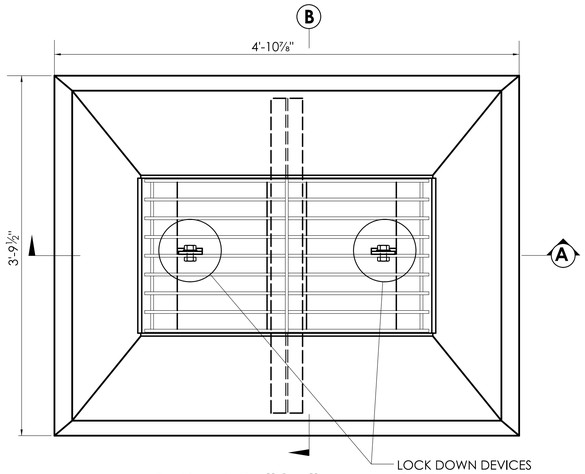

PLAIN-TYPE "C-L" HEAVY DUTY CATCH BASIN TOP

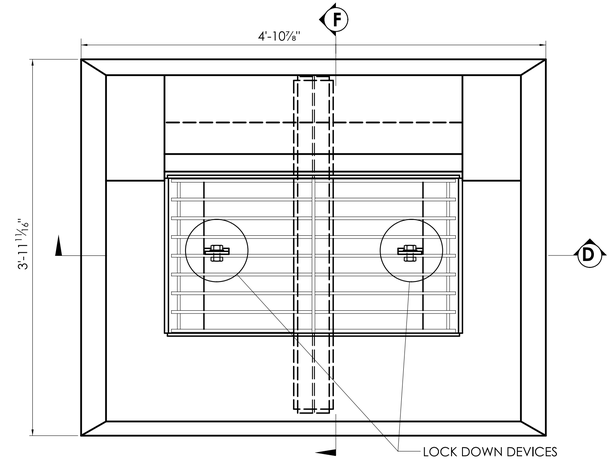

PLAIN-TYPE "C" HEAVY DUTY CATCH BASIN TOP

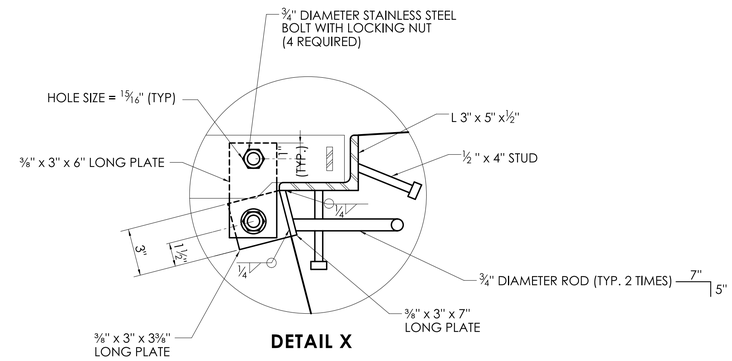

DETAIL X

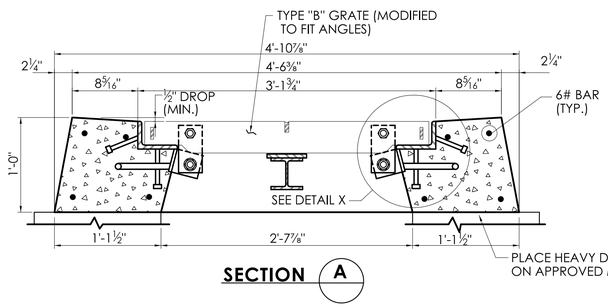

SECTION A

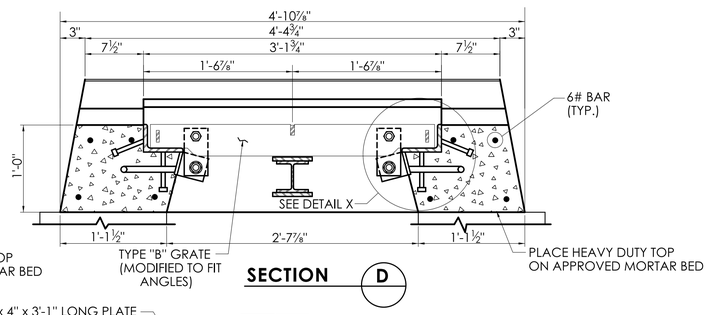

SECTION D

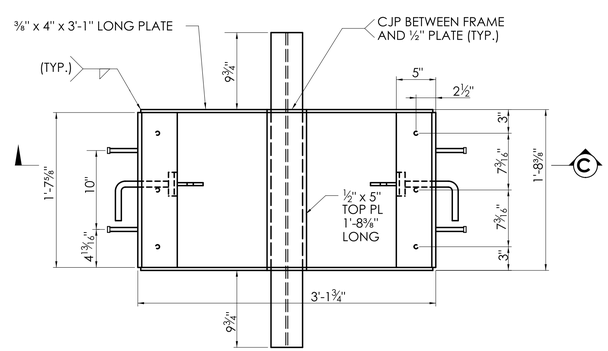

PLAIN - TYPE "C-L" FRAME

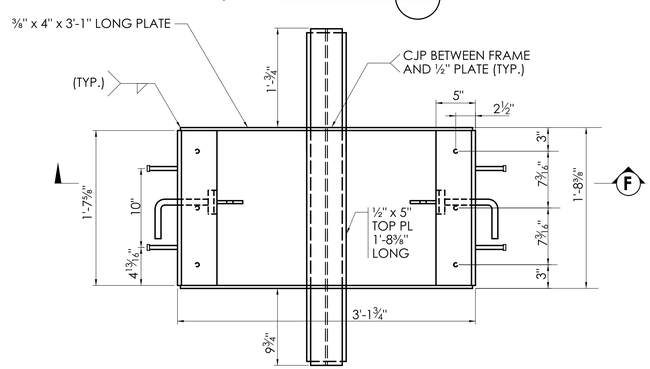

PLAIN - TYPE "C" FRAME

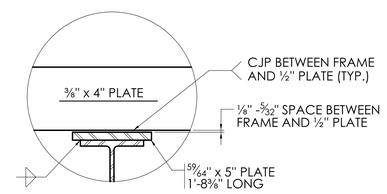

DETAIL Y

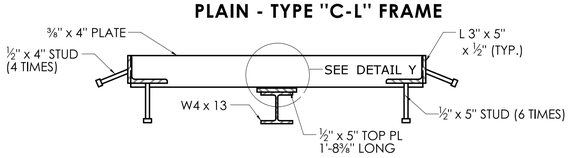

SECTION C

TYPE "C-L" HEAVY DUTY CATCH BASIN FRAME

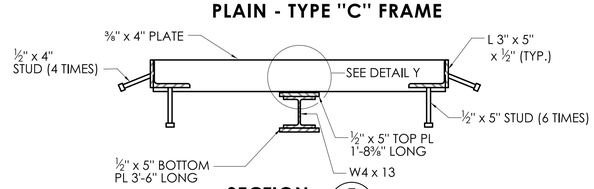

SECTION F

TYPE "C" HEAVY DUTY CATCH BASIN FRAME

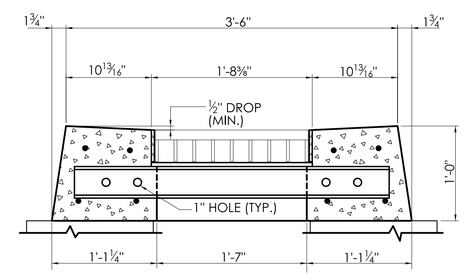

SECTION B

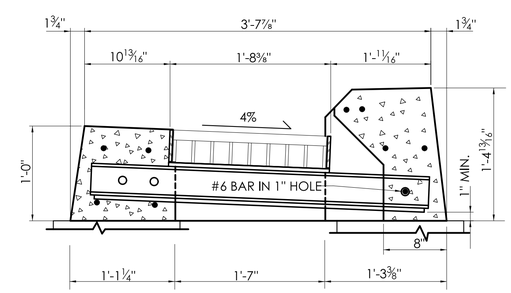

SECTION F

	NOT TO SCALE	SIGNATURE BLOCK: OFFICE OF ENGINEERING 2800 BERLIN TURNPIKE NEWINGTON, CT 06111	SUBMITTED BY: Digitally signed by Leo Fontaine, P.E. Date: 2022.10.05 14:19:29-04'00'	APPROVED BY: Digitally signed by Calabrese, Michael Date: 2022.11.09 14:01:32-05'00'	STATE OF CONNECTICUT DEPARTMENT OF TRANSPORTATION	CTDOT STANDARD SHEET

STANDARD SHEET TITLE: **CATCH BASIN LOCK DOWN TOPS**

STANDARD SHEET NO.: **HW-586_09**

PLOTTED DATE: 10/5/2022