GENERAL NOTES:

1. SEE SHEET HW-586_08 FOR CATCH BASIN FRAMES AND GRATES, AND HW-586_09 CATCH BASIN LOCK DOWN TOPS.
2. SEE SHEET HW-586_02 CATCH BASIN TOPS (TYPES "C" AND "C-L") FOR DOUBLE GRATE TYPE I TO DETERMINE THE TOP OF FRAME AT THE GUTTER.
3. ALL BARS SHALL HAVE A MINIMUM 2" COVER.
4. MANUFACTURING DIMENSIONAL TOLERANCE TABLE

Any Dimension (D)	Allowable Tolerance
D < 5"	± ¼"
5" ≤ D ≤ 10"	± ½"
D > 10"	± 1"

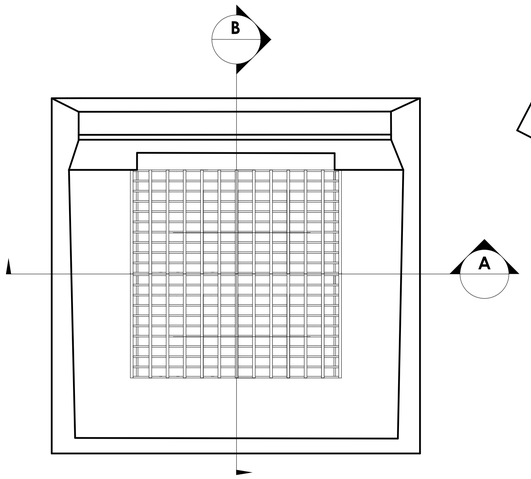

TYPE "C" CATCH BASIN DOUBLE GRATE TYPE I TOP PLAN

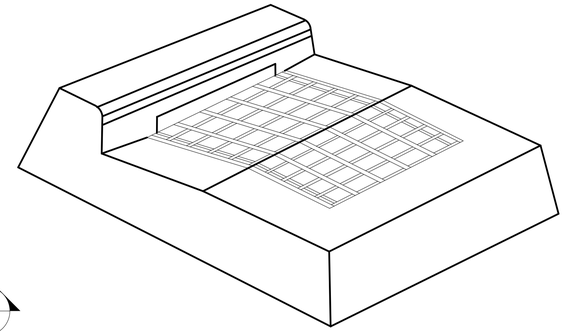

TYPE "C" CATCH BASIN DOUBLE GRATE TYPE I TOP

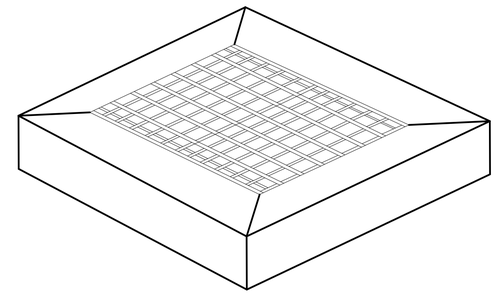

TYPE "C-L" CATCH BASIN DOUBLE GRATE TYPE I TOP

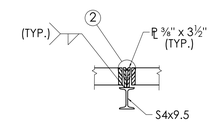

DETAIL 1

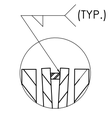

DETAIL 2

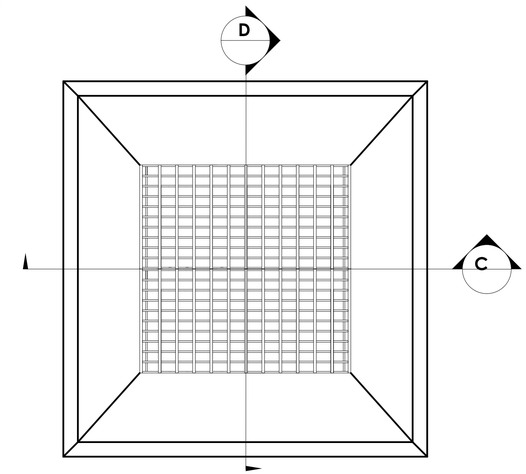

TYPE "C-L" CATCH BASIN DOUBLE GRATE TYPE I TOP PLAN

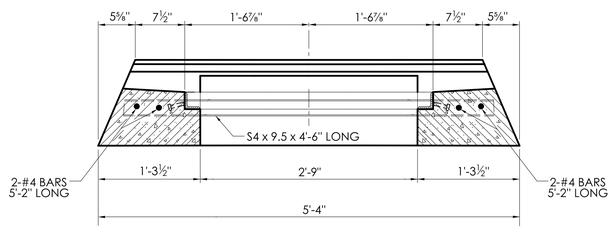

TYPE "C" CATCH BASIN DOUBLE GRATE TYPE I TOP

SECTION A

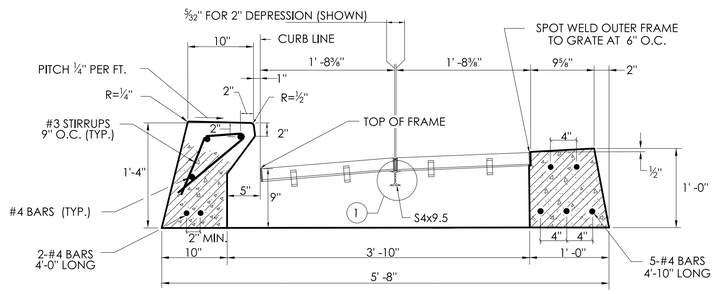

TYPE "C" CATCH BASIN DOUBLE GRATE TYPE I TOP FOR 6" CONCRETE CURBING OR 6" STONE CURBING

SECTION B

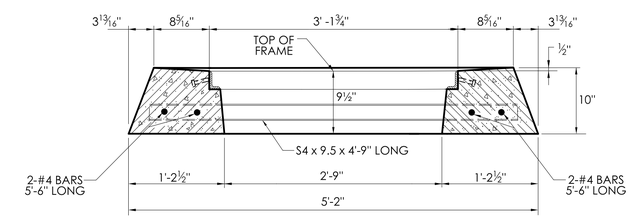

TYPE "C-L" CATCH BASIN DOUBLE GRATE TYPE I TOP

SECTION C

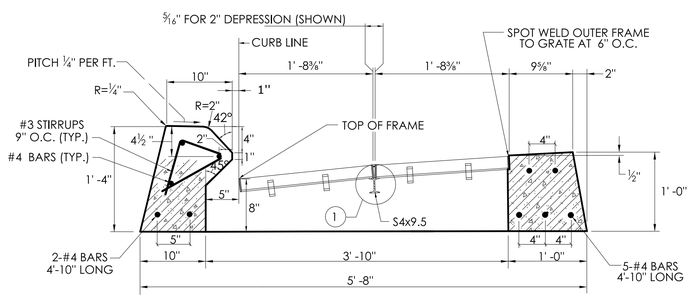

TYPE "C" CATCH BASIN DOUBLE GRATE TYPE I TOP FOR 6" BITUMINOUS CONCRETE LIP CURBING

SECTION B

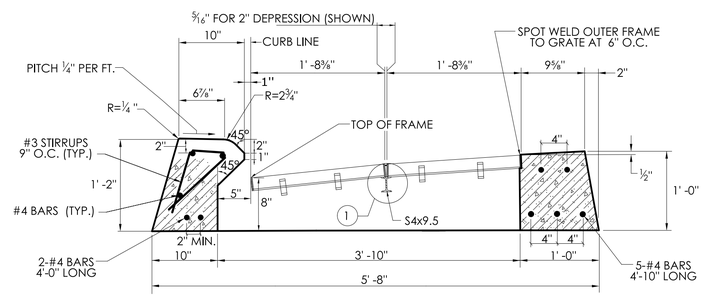

TYPE "C" CATCH BASIN DOUBLE GRATE TYPE I TOP FOR 4" CONCRETE PARK CURBING OR 4" BITUMINOUS CONCRETE PARK CURBING

SECTION B

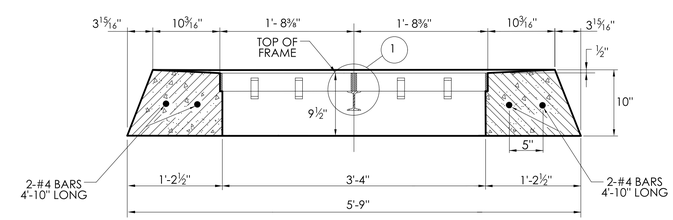

TYPE "C-L" CATCH BASIN DOUBLE GRATE TYPE I TOP

SECTION D

	NOT TO SCALE	SIGNATURE BLOCK: OFFICE OF ENGINEERING 2800 BERLIN TURNPIKE NEWINGTON, CT 06111	SUBMITTED BY: Digitally signed by Leo Fontaine, P.E. Date: 2022.10.05 14:18:04-04'00'	APPROVED BY: Digitally signed by Calabrese, Michael Date: 2022.11.09 13:52:10-05'00'	STATE OF CONNECTICUT DEPARTMENT OF TRANSPORTATION	CTDOT STANDARD SHEET	STANDARD SHEET TITLE: CATCH BASIN TYPE "C" AND "C-L" DOUBLE GRATE TYPE I TOPS	STANDARD SHEET NO.: HW-586_07b

PLOTTED DATE: 9/21/2022