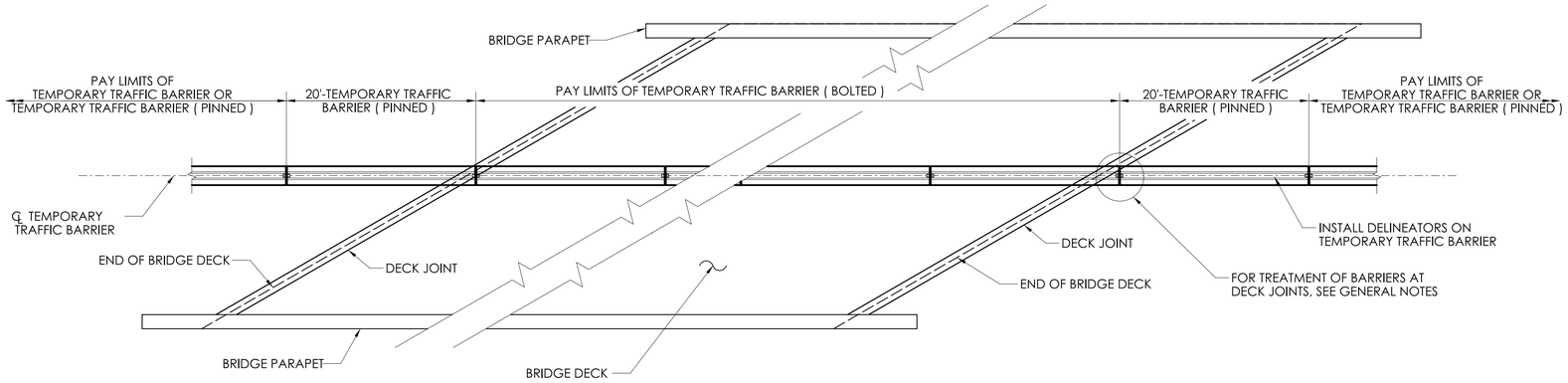

LAYOUT PLAN

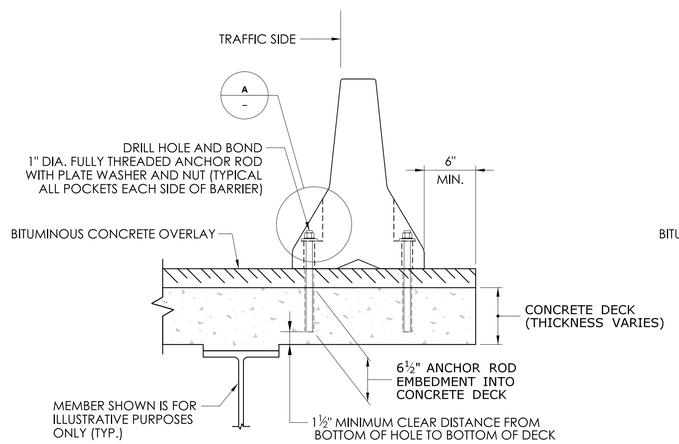

ADHESIVE BONDED ANCHORAGE OPTION

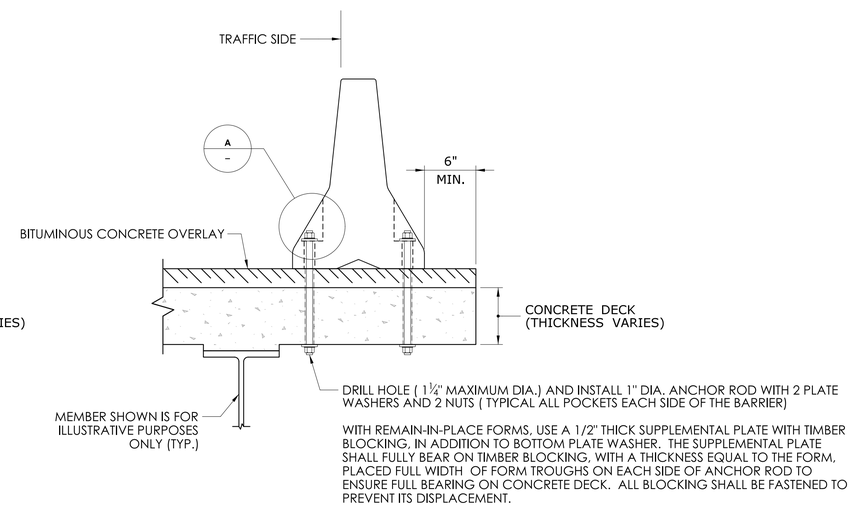

THRU-BOLTED ANCHORAGE OPTION

TEMPORARY TRAFFIC BARRIER (BOLTED)

GENERAL NOTES:

THE TEMPORARY TRAFFIC BARRIER (BOLTED) DEPICTED ON THIS SHEET SHALL BE A PRECAST CONCRETE BARRIER CONFORMING TO THE DETAILS SHOWN ON STANDARD SHEET HW-822_02A AND BE ANCHORED TO A CONCRETE DECK, WITH OR WITHOUT A BITUMINOUS CONCRETE OVERLAY. NO BARRIER SECTION SHALL BE LESS THAN 10 FT. LONG. ANCHORAGES SHALL BE INSTALLED IN ALL ANCHOR POCKETS ON EACH SIDE OF THE BARRIER. DELINEATORS SHALL BE INSTALLED ON THE TOP OF ALL BARRIERS AS REQUIRED BY SECTION 8.22. FOR ADDTIONAL INSTALLATION AND REMOVAL REQUIREMENTS, SEE SECTION 8.22.

THE TEMPORARY TRAFFIC BARRIER (BOLTED) IS MASH TL-3 COMPLIANT. THE CTDOT MAXIMUM LATERAL DEFLECTION LIMIT, DUE TO THE PERMANENT SET DEFLECTION OR THE DYNAMIC DEFLECTION, FOR A BARRIER ANCHORED TO A CONCRETE SURFACE IMPACTED BY A VEHICLE MEETING THE REQUIREMENTS OF MASH TL-3 IS 6 IN.

THREE TYPES OF BOLTED ANCHORAGES ARE ALLOWED: ADHESIVE BONDED ANCHORAGES, THRU-BOLTED ANCHORAGES, AND DOWEL BAR ANCHORAGES. THE FOLLOWING ARE THE LIMITATIONS AND CONDITIONS FOR USE OF EACH TYPE OF ANCHORAGE:

ADHESIVE BONDED ANCHORAGES ARE PERMITTED TO BE USED UNDER THE FOLLOWING CONDITIONS:

- IN NEW DECKS, WITH A MINIMUM 8.5 IN. THICKNESS AND 2 MATS OF REINFORCEMENT, SUPPORTED BY DISCRETE MEMBERS
- IN NEW DECKS, WITH A MINIMUM 7 IN. THICKNESS AT THE ANCHORAGE, SUPPORTED BY BUTTED PRECAST CONCRETE DECK UNITS
- IN EXISTING DECKS, WITH A MINIMUM 8.00 IN. THICKNESS, 2 MATS OF REINFORCEMENT, AND A CONDITION RATING OF NO LESS THAN 5
- IN EXISTING DECKS, WITH A MINIMUM 7.25 IN. THICKNESS AND 2 MATS OF REINFORCEMENT, ONLY OVER FLANGES OF THE SUPPORTING DISCRETE MEMBERS

ADHESIVE BONDED ANCHORAGES ARE NOT PERMITTED TO BE USED IN ANY PORTION OF A PRETENSIONED CONCRETE MEMBER.

THRU-BOLTED ANCHORAGES ARE PERMITTED TO BE USED IN EXISTING DECKS SUPPORTED BY A DISCRETE MEMBERS, EXCEPT WHERE THE ANCHORAGE WILL CONFLICT WITH A COMPONENT OF THE MEMBER (SUCH AS THE TOP FLANGE), REGARDLESS OF THE DECK THICKNESS OR CONDITION RATING.

THRU-BOLTED ANCHORAGES ARE NOT PERMITTED TO BE USED IN ANY PORTION OF A NEW DECK OR ANY COMPONENT OF THE MEMBER SUPPORTING THE DECK, SUCH AS A STRUCTURAL STEEL OR PRETENSIONED MEMBER.

DOWEL BAR ANCHORAGES ARE PERMITTED TO BE USED ONLY IN NEW PRESTRESSED DECK UNITS JOINED WITH A PARTIAL OR FULL DEPTH CLOSURE POUR WITHOUT A DECK.

ADHESIVE BONDED ANCHORAGE REQUIREMENTS:

THE ADHESIVE BONDING MATERIAL SHALL HAVE A MINIMUM CHARACTERISTIC BOND STRESS OF 1,550 PSI OR GREATER IN DRY, UNCRACKED CONCRETE AT TEMPERATURE RANGE A IN A HAMMER DRILLED OR CORE DRILLED HOLE. THE CONCRETE DECK SHALL BE ASSUMED TO HAVE A MINIMUM CONCRETE STRENGTH OF 3,000 PSI.

THE MINIMUM CONCRETE EMBEDMENT DEPTH OF THE ANCHOR ROD SHALL BE NO LESS THAN 6.50 IN. THE MINIMUM DISTANCE FROM THE BOTTOM OF THE DRILLED HOLE TO THE BOTTOM OF THE CONCRETE DECK SHALL BE 1.5 IN. TO PREVENT SPALLING OF CONCRETE.

IF REINFORCEMENT IS ENCOUNTERED AND CANNOT BE AVOIDED, THE REINFORCEMENT SHALL BE DRILLED THROUGH TO ACHIEVE THE REQUIRED EMBEDMENT.

IN EXISTING DECKS, IF THE BOTTOM OF THE DECK SPALLS AND THE DECK THICKNESS IS COMPLETELY PENETRATED BY DRILLING OPERATIONS, A THRU-BOLTED ANCHORAGE SHALL BE USED.

NO FIELD TESTING OF THE ADHESIVE BONDED ANCHORS IS REQUIRED.

THE ADHESIVE BONDING MATERIAL SHALL BE FULLY CURED PRIOR TO PUTTING THE TEMPORARY TRAFFIC BARRIER (BOLTED) INTO SERVICE. THE TIME TO FULL CURE SHALL BE BASED ON THE LOWEST TEMPERATURE DURING THE CURING TIME PERIOD.

THRU-BOLTED ANCHORAGE REQUIREMENTS:

ANCHOR HOLES IN THE CONCRETE DECK SHALL BE MADE WITH A CORE DRILL OR ANY OTHER APPROVED ROTARY DRILLING DEVICE THAT DOES NOT IMPART AN IMPACT FORCE.

IF REINFORCEMENT IS ENCOUNTERED AND CANNOT BE AVOIDED, THE REINFORCEMENT SHALL BE DRILLED THROUGH TO COMPLETE THE HOLE.

ANCHOR HOLES SHALL NOT EXTEND INTO OR DAMAGE MEMBERS SUPPORTING THE CONCRETE DECK.

FOR CONCRETE DECKS CONSTRUCTED WITH STAY IN PLACE FORMS, THE VALLEYS SHALL BE FILLED WITH A NON-COMPRESSIBLE MATERIAL TO ENSURE FULL BEARING OF THE PLATE WASHER.

DOWEL BAR ANCHORAGE REQUIREMENTS:

FOR DOWEL BAR ANCHORAGE REQUIREMENTS AND DETAILS, REFER TO THE STRUCTURE SUBSET(S).

TO ACCOMMODATE BRIDGE MOVEMENTS AT A DECK JOINT, THE ENDS OF THE ABUTTING BARRIER SECTIONS SHALL BE PLACED OVER AND ADJACENT TO THE DECK JOINT. VARYING BARRIER SECTION LENGTHS MAY BE REQUIRED TO MEET THIS REQUIREMENT ON A BRIDGE. ON BARRIER SECTIONS SPANNING A DECK JOINT, BOLTED ANCHORAGES SHALL ONLY BE INSTALLED ON ONE END OF A BARRIER SECTION TO ALLOW FOR BRIDGE MOVEMENTS. NO MORE THAN 1 BOLTED ANCHORAGE MAY BE OMITTED FROM A BOLTED BARRIER SECTION TO AVOID CONFLICT WITH THE DECK JOINT. BOLTED ANCHORAGES SHALL BE NO LESS THAN 9 IN. FROM THE END OF A DECK OR THE EDGE OF A DECK JOINT BLOCKOUT. AT DECK JOINTS, THE ABUTTING BARRIER ENDS SHALL BE PLACED 0.625 IN. APART AND USE A TYPICAL CONNECTION KEY TO CONNECT THE BARRIER ENDS TOGETHER.

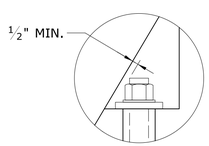

ANCHOR ROD CLEARANCE A / -

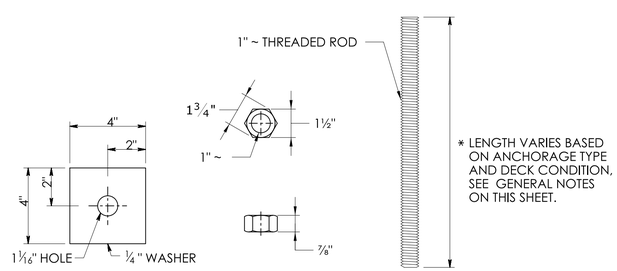

PLATE WASHER HEX NUT THREADED ROD

ANCHOR ROD DETAILS

MASH 2016 COMPLIANT
APPROVAL ID. 2021-01

	NOT TO SCALE	SIGNATURE BLOCK: OFFICE OF ENGINEERING 2800 BERLIN TURNPIKE NEWINGTON, CT 06111	SUBMITTED BY: Digitally signed by Leo Fontaine, P.E. Date: 2024.08.16 11:10:25-04'00'	APPROVED BY: Digitally signed by Michael N. Calabrese, P.E. Date: 2024.10.18 11:54:05-04'00'	STATE OF CONNECTICUT DEPARTMENT OF TRANSPORTATION	CTDOT STANDARD SHEET	STANDARD SHEET TITLE: TEMPORARY TRAFFIC BARRIER (BOLTED)	STANDARD SHEET NO.: HW- 822_02b

PLOTTED DATE: 8/13/2024