GENERAL NOTES:

1. R-B MASH BRIDGE ATTACHMENT - TRAILING END MAY ONLY BE INSTALLED ON ONE-WAY ROADWAYS ONLY.
2. SEE SHEET HW-910_20 FOR MASH W-BEAM HARDWARE AND W-BEAM DELINEATOR DETAILS.
3. RAIL HEIGHT CONSTRUCTION TOLERANCE IS +/- 1 INCH.
4. FOR NEW CONSTRUCTION, PLACE 6 INCH LAYER OF PROCESS AGGREGATE. FOR CONSTRUCTION PROJECTS WITH GUIDERAIL UPGRADE, THE CONTRACT PLANS MAY CALL OUT PROCESS AGGREGATE ONLY TOBE PLACE IN LOCATIONS OF EXISTING VERTICAL PAVEMENT EDGE DROP OFF AS A LEVELING MATERIAL, FILLING IN DEPRESSED AREAS.
5. DELINEATORS SHALL BE INSTALLED ON THE POST CLOSEST TO THE DESIGNATED SPACING. SEE SHEET HW-910_20 FOR W-BEAM DELINEATOR DETAILS.

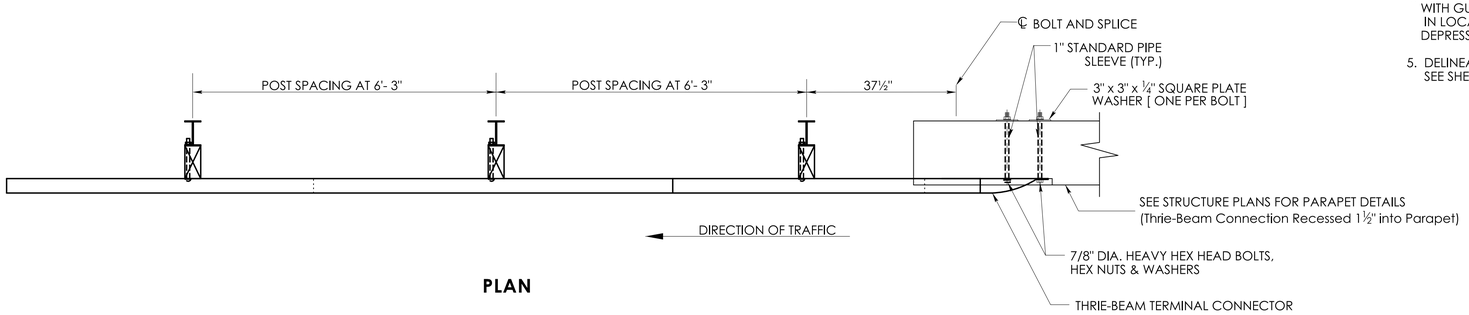

PLAN

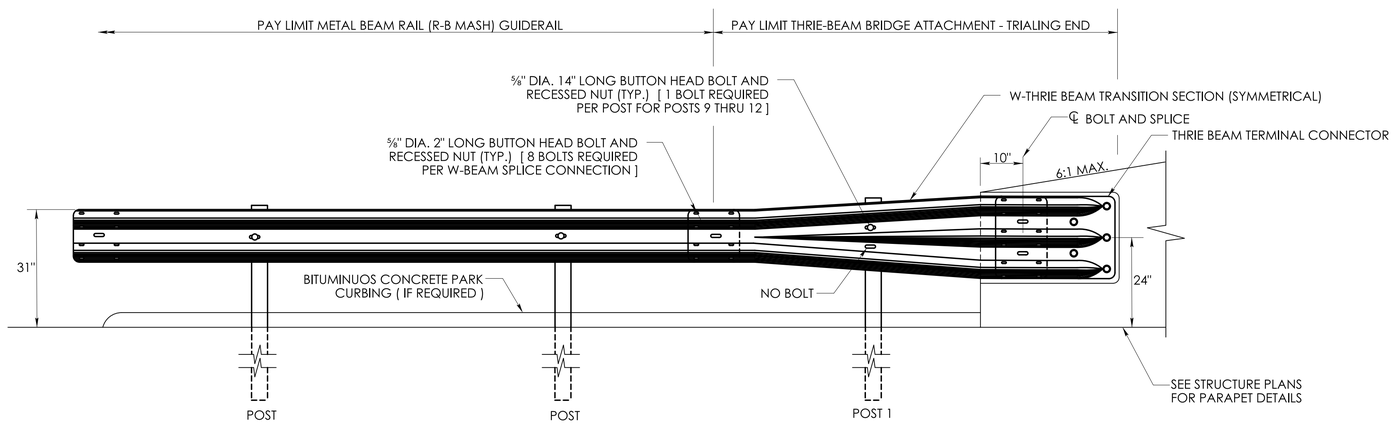

ELEVATION

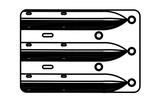

THRIE BEAM TERMINAL CONNECTOR

[RTE01]

W-THRIE BEAM TRANSITION SECTION (SYMMETRICAL)

[RWT01]

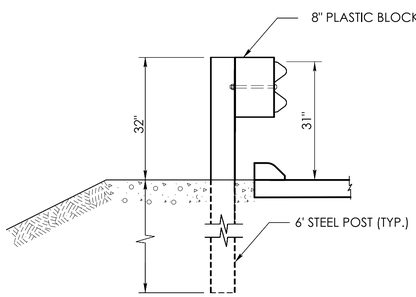

POST

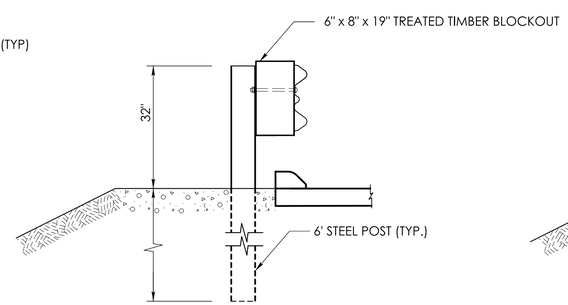

POST 1

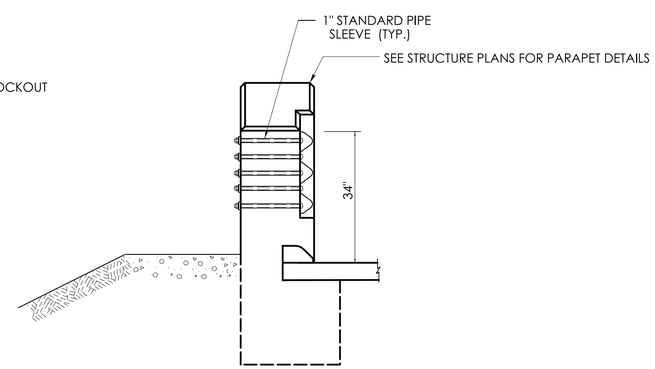

THRIE BEAM CONNECTION

	NOT TO SCALE	SIGNATURE BLOCK: OFFICE OF ENGINEERING 2800 BERLIN TURNPIKE NEWINGTON, CT 06111	SUBMITTED BY: Digitally signed by Leo Fontaine, P.E. Date: 2024.02.02 07:16:28-05'00'	APPROVED BY: Michael N. Calabrese, P.E. 2024.02.02 08:15:52-05'00'	STATE OF CONNECTICUT DEPARTMENT OF TRANSPORTATION	CTDOT STANDARD SHEET	STANDARD SHEET TITLE: THRIE-BEAM BRIDGE ATTACHMENT TRAILING END	STANDARD SHEET NO.: HW-910_29

PLOTTED DATE: 2/1/2024