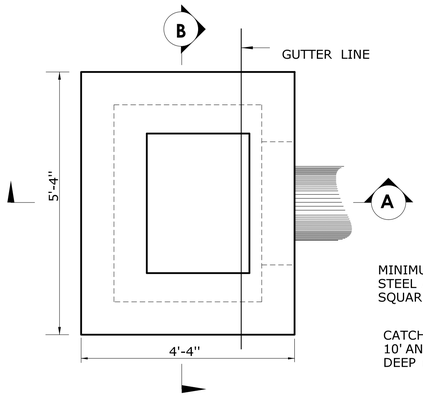

PLAN

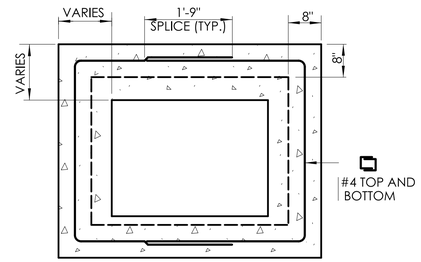

REDUCER SECTION (TYP.)

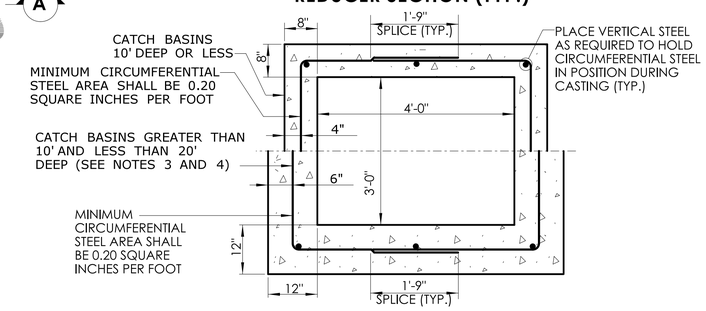

RISER SECTION (TYP.)

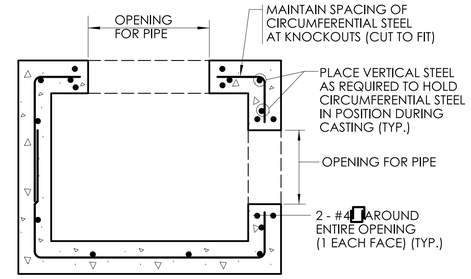

TYPICAL SECTION THROUGH RISER WITH OPENING

GENERAL NOTES:

1. WELDED WIRE FABRIC WITH AN AREA EQUAL TO OR GREATER THAN THE REINFORCING SHOWN MAY BE SUBSTITUTED AS APPROVED BY THE ENGINEER.
2. ALL REINFORCEMENT SHALL HAVE A MINIMUM CLEAR COVER OF 2 INCHES, EXCEPT FOR BENEATH BOTTOM REINFORCEMENT IN TOP SLABS, WHERE THE MINIMUM MAY BE 1½ INCHES.
3. WALL THICKNESS OF ALL CATCH BASINS OVER 10 FEET DEEP SHALL BE INCREASED TO 12 INCHES. INSIDE DIMENSIONS SHALL REMAIN THE SAME. THE 12 INCH THICKNESS SHALL START AFTER THE FIRST 10 FEET.
4. BASES AND RISERS AT A DEPTH OF 20 FEET AND GREATER SHALL BE DESIGNED BY THE CONTRACTOR AND WORKING DRAWINGS SHALL BE SUBMITTED TO THE ENGINEER FOR REVIEW.
5. RISERS MAY BE PREFABRICATED WITH PIPE OPENINGS IN ALL FOUR WALLS. ADEQUATE REINFORCING AROUND PIPE OPENINGS SHALL BE PROVIDED. RISERS USED WHERE A PIPE OPENING IS TO REMAIN IN PLACE MUST BE FORMED UP WITH BRICK AS DIRECTED BY THE ENGINEER.
6. RISERS SHALL NEVER HAVE CORNER PIPE ENTRIES. ROUND STRUCTURES SHALL BE USED WHEN PIPES CANNOT ALIGN WITH A RECTANGULAR STRUCTURE KNOCKOUT.
7. SHRINKAGE AND TEMPERATURE REINFORCEMENT SHALL BE PROVIDED IN THE TOPS OF SLABS. THE TOTAL AREA OF REINFORCEMENT PROVIDED SHALL BE AT LEAST 0.125 SQUARE INCHES PER FOOT IN EACH DIRECTION. THE MAXIMUM SPACING OF THIS REINFORCEMENT SHALL NOT EXCEED 18 INCHES.
8. THE DETAILS SHOWN IN THE PLAN VIEW FOR PRECAST CONCRETE ROUND STRUCTURES SHALL ALSO BE USED FOR CONVERTING MANHOLES TO CATCH BASINS.
9. FOR CATCH BASIN TOPS, SEE SHEET NO. HW-586_07 FOR RECTANGULAR OPENING OR SHEET NOS. HW-586_10a, HW-586_ 10b OR HW-586_ 10c FOR CIRCULAR OPENING.

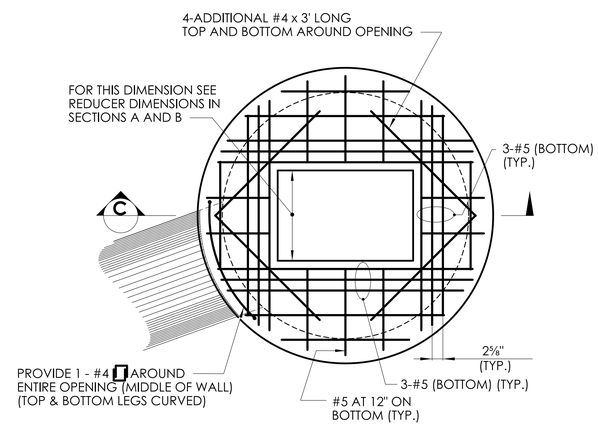

PLAN
(SEE NOTE 9)

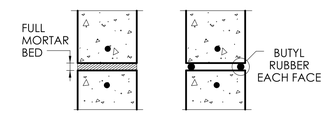

MORTAR JOINT DETAIL

BUTYL RUBBER JOINT DETAIL

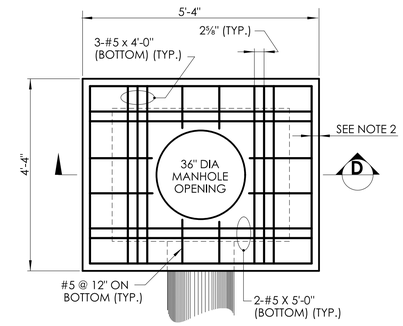

PLAN

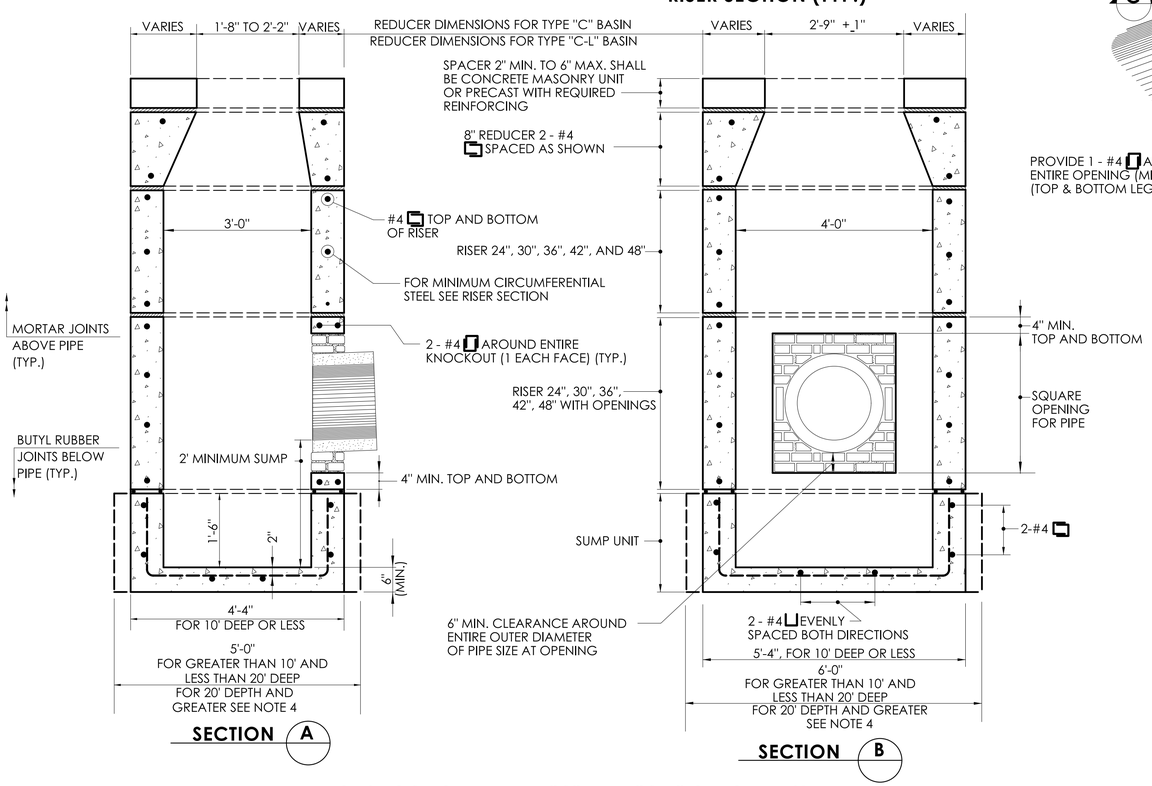

PRECAST CONCRETE TYPE "C" AND "C-L" CATCH BASIN
(UNDER 10' DEEP SHOWN)

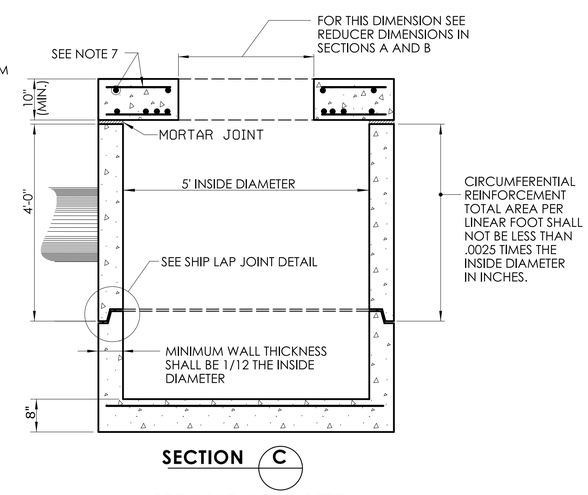

SECTION C

PRECAST CONCRETE TYPE "C" AND "C-L" ROUND STRUCTURE
(SEE NOTE 6)

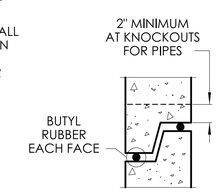

SHIP LAP JOINT DETAIL
(FOR USE WITH ROUND STRUCTURES ONLY)

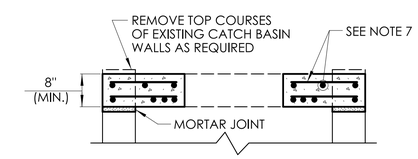

SECTION D

TOP SLAB TO CONVERT CATCH BASIN TO MANHOLE

	NOT TO SCALE	SIGNATURE BLOCK: OFFICE OF ENGINEERING 2800 BERLIN TURNPIKE NEWINGTON, CT 06111	SUBMITTED BY: Digitally signed by Leo Fontaine, P.E. Date: 2024.08.16 11:08:33-04'00'	APPROVED BY: Digitally signed by Michael N. Calabrese, P.E. Date: 2024.10.18 11:56:19-04'00'	STATE OF CONNECTICUT DEPARTMENT OF TRANSPORTATION	CTDOT STANDARD SHEET	STANDARD SHEET TITLE: PRECAST CATCH BASIN AND ROUND STRUCTURE	STANDARD SHEET NO.: HW- 586_04

PLOTTED DATE: 8/13/2024