GENERAL NOTES:

1. SEE SHEET HW-910_20 FOR MASH HARDWARE AND W-BEAM DELINEATOR DETAILS.
2. W-BEAM GUIDERAIL MAY BE PLACED 1' OR MORE FROM THE EDGE OF PAVEMENT ONLY ON SLOPES 10:1 OR FLATTER AND WITHOUT CURBING.
3. IF THE RAIL IS INSTALLED WITHIN 2' OF THE EDGE OF PAVEMENT, THE RAIL HEIGHT IS MEASURED FROM THE SHOULDER SLOPE EXTENDED TO THE RAIL. IF THE RAIL IS INSTALLED BEYOND 2' FROM THE EDGE OF PAVEMENT, THE RAIL HEIGHT IS MEASURED FROM THE GROUND DIRECTLY BELOW THE RAIL.
4. RAIL HEIGHT CONSTRUCTION TOLERANCE IS +/- 1 INCH.

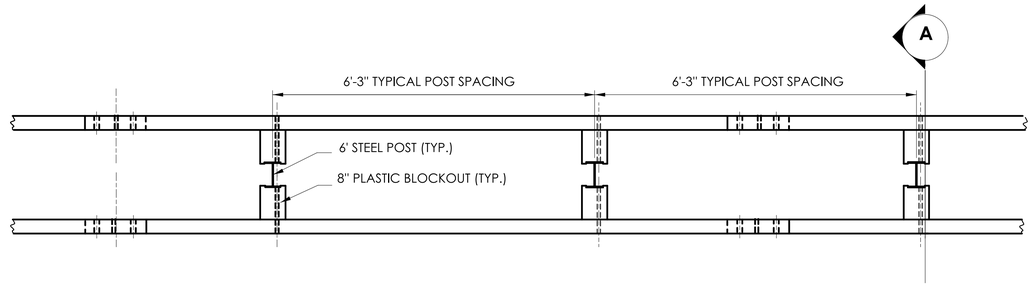

PLAN

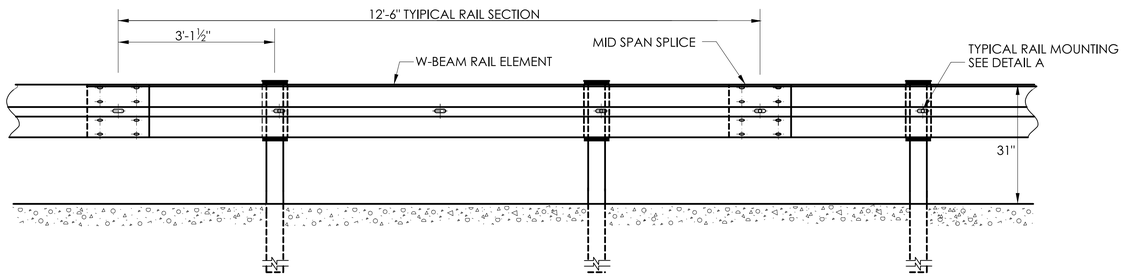

ELEVATION

METAL BEAM RAIL (MD-B MASH) GUIDERAIL

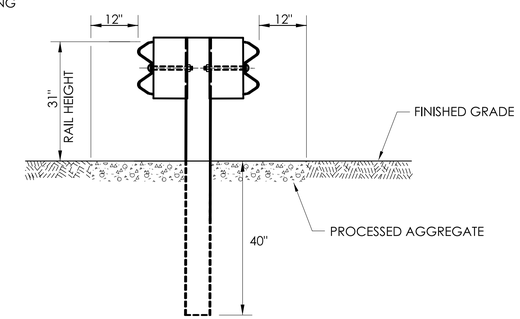

SECTION A -

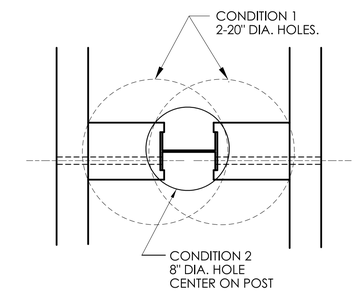

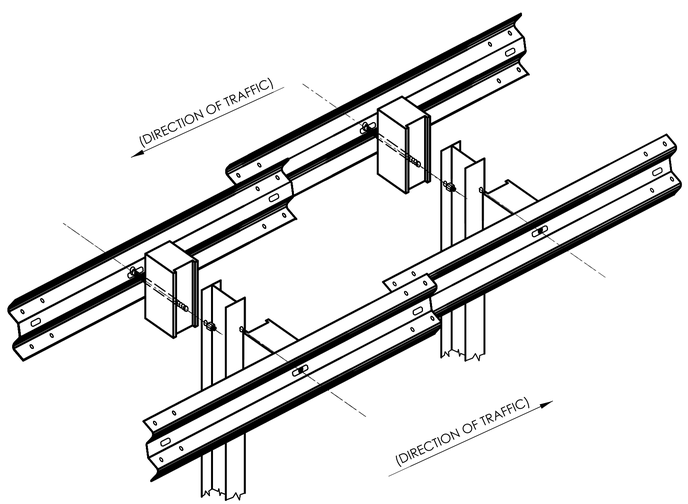

LAP W-BEAM RAIL SECTIONS

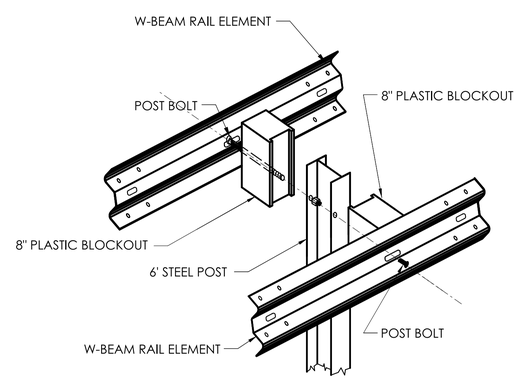

DETAIL A

RAIL MOUNTING

CONDITION 1 :
IF SOIL DEPTH (A) IS ≤ 18" DEEP DRILL 2 - 20" DIA. HOLES 24" INTO LEDGE. (B)

CONDITION 2 :
IF SOIL DEPTH IS > 18" DEEP (A) DRILL 8" DIA. HOLE 1' INTO LEDGE (B) OR TO THE DEPTH OF FULL EMBEDMENT WHICHEVER IS LESS.

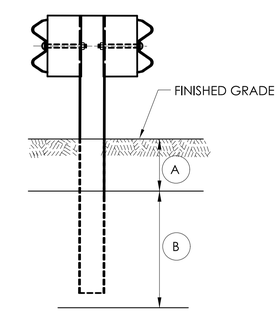

SECTION A -

DRILLING IN ROCK FOR GUIDERAIL POSTS

	NOT TO SCALE	SIGNATURE BLOCK: OFFICE OF ENGINEERING 2800 BERLIN TURNPIKE NEWINGTON, CT 06111	SUBMITTED BY: Digitally signed by Leo Fontaine, P.E. Date: 2022.09.27 15:09:16-04'00'	APPROVED BY: Digitally signed by Calabrese, Michael Date: 2022.11.08 09:53:05-05'00'	STATE OF CONNECTICUT DEPARTMENT OF TRANSPORTATION	CTDOT STANDARD SHEET	STANDARD SHEET TITLE: METAL BEAM RAIL (MD-B MASH) GUIDERAIL	STANDARD SHEET NO.: HW- 910_22

PLOTTED DATE: 9/21/2022